Main Index

ETC Index

Index ..... Page 01-02

A ETC

Profiles
Specification ..... Page A03-A08
Technical Information ..... Page A09-A14
Scale Profile Drawings ..... Page A15-A30

B ETC

Accessories
Photos & Drawings ..... Page B03-B28

C ETC

Sections
Parallel & Casement Construction Drawings
Scale Elevations ..... Page C03-C17
Reversible Construction Drawings
Scale Elevations ..... Page C19-C30

D ETC

Statics..... Page D01-D02

E ETC

Parallel & Casement Construction Drawings
Corner Jointing ..... Page E03-E04
Transom/Mullion Fixings ..... Page E05
Reverse Adaptor..... Page E06
Drainage..... Page E07
Locking Hardware - System Parameters ..... Page E08-E09
Hinges - System Parameters ..... Page E10-13
Bead & Glazing ..... Page E14
Fixing Straps..... Page E26

Reversible Construction Drawings
Corner Jointing ..... Page E15
Transom/Mullion Fixings ..... Page E16
Drainage..... Page E17
Reversible Hinge Details..... Page E18-E20
Locking Hardware - System Parameters ..... Page E21-E23
Bead & Glazing ..... Page E24-E25
Fixing Straps..... Page E26

Main Index

F ETC

Sawing Tables

Parallel/Casement..... Page F03-F08
Reversible..... Page F09-F10

Specification

GENERAL DESCRIPTION

The "Alitherm 700" window system described in this manual is suitable for both replacement windows for existing buildings, and for installation into new buildings.

The system incorporates parallel, top hung, side hung & reversible window types with internally beaded vent frames suitable for cockspur and shootbolt locking. The outer frames may be internally or externally glazed as preferred.

Alitherm 700 parallel windows are often used with chain operators which can be connected to the building management system as part of an automated solution for climate control.

RECOMMENDED DESIGN LIMITATIONS

Parallel Vents:

Maximum Width: 2000mm
Minimum Width: 400mm
Maximum Height: 3000mm
Minimum Height: 750mm
Maximum Weight: 220kg
NOTE:
Parallel windows over 1500mm wide or weighing over 200kg should be motorised operation only

Reversible Vents:

Maximum Width: 1500mm
Minimum Width: 269mm
Maximum Height: 1558mm
Minimum Height: 458mm
Maximum Weight: 60kg

Top Hung Vents:

Maximum Width: 2000mm
Maximum Height: 2500mm
Minimum Height: 267mm
Maximum Weight: 100kg (Stays)
120kg (ACET750)

Side Hung Vents:

Maximum Width: 840mm
Minimum Width: 327mm
Maximum Height: 1500mm (Please consult our technical department for heights over 1500mm)
Maximum Weight: 55kg (Stays)
80kg (ACET750)

.

Specification

PROFILE SPECIFICATION

The window frame are constructed of aluminium alloy extrusion to BSEN 755, extruded from 6063 T6 alloy. The internal and external extrusions are separated with a polyamide thermal break.

The external aluminium alloy extrusion is pre-treated and finished either:-

a) Anodised to BS 3987: 1987, grade AA25 to a natural self colour.

b) Polyester powder organic coating to BS 6496. Dual colour is available.

GENERAL MANUFACTURING

Outer and vent frames are made by cutting the frame profiles with accurate 45° mitred ends using Tungsten Carbide Tipped Saw Blades, operating at approximately 3000 rpm.

The corners are joined using the Alitherm 700 crimping tools to form a cold forged corner joint (made by deforming small slugs of metal into the groove of the corner cleat).

The ends of transoms and mullions are profiled to fit the frame and fixed using self-tapping screws.

On polyester powder coated finishes, great care should be taken to avoid getting gap sealer on visible surfaces and should be removed as soon as possible with a clean cloth.

Care should be exercised when using products not supplied by Smart Systems Ltd as no responsibility can be accepted.

Specification

WINDOW DRAINAGE

As with all dry glazed systems, it is recommended that the window system is adequately drained and ventilated. Refer to drainage details in manual, if in doubt ask The Technical Department.

In order to get maximum performance and weather resistance it is recommended that drips are used over all vents.

OUTER FRAME MANUFACTURING INFORMATION

The outer frame members are cut with 45° mitred ends to the overall size required, measured to the longest point of the metal.

Prior to corner crimping the centre line position of any transoms or mullions should be marked on the outer frame members. Where the transom/mullion runs right through, it should be marked out on both jambs or head and cill members in pairs to ensure accurate alignment of the sections.

Using the marked centre line, Drill the transom/mullion fixing holes using a 5mm dia. drill bit.

Corners are formed by coating the cut faces to be joined with a suitable small gap sealer. Into the mitred corner insert the required corner cleats and, where required, the aluminium corner chevrons. The two mitred ends are then brought together and crimped. The small gap sealer ensures a permanent joint and guards against the ingress of moisture and joint movement. After crimping the corner joint, special care should be taken to ensure any excess sealer is removed from painted surfaces.

Transoms or mullions are cut with square ends to the sizes calculated on the cutting formula sheets. The ends are then profiled to allow them to fit into the outer frame. Special tooling is available on request to profile the end of transom/mullion.

Prior to fixing of transoms and mullions smear the cut ends with a suitable gap sealer. After fixing, special care should be taken to ensure any excess is cleared from painted surfaces.

Specification

INTERNALLY BEADED VENT

Corners are formed by coating the cut faces to be joined with a suitable gap sealer. Into the mitred corner insert the required corner cleats and chevrons. The mitred ends are then brought together and crimped. The small gap sealer ensures a permanent joint and guards against the ingress of moisture and joint movement. Care should be taken to ensure any excess sealer is removed from the surfaces.

The cutting sizes produce vent frames with a cavity of 17mm.

When fixing, the friction stays into both the outer and vent frame, care should be taken to ensure that holes are located on 'V' grooves in the aluminium extrusions.

INTERNALLY BEADED ADAPTOR FRAME

The internally beaded adaptor frame members are cut with 45° mitred ends to the overall size required, measured to the longest point of metal. Care should be taken when measuring and cutting the frame members as only nominal clearance is required when the assembled frame is fixed in the outer frame.

Corners are formed by coating the cut faces to be joined with a suitable small gap sealer. Into the mitred corner insert a corner cleat and the required corner chevrons. The small gap sealer ensures a permanent joint and guards against the ingress of moisture and joint movements. Care should be taken to ensure any excess sealer is removed from painted surfaces.

Specification

MULTI-POINT LOCKING

The vent should be prepped for the locking mechanism prior to fabrication and fitted into to vent before hanging. Stainless steel fixing should be used for securing the locking mechanism and keeps in position.

TOP HUNG & REVERSIBLE VENTILATORS WHEN USING COCKSPUR HANDLES

If the width of the ventilator frame is less then 750mm, fit one handle.

If the width of the ventilator is greater than 750mm, fit two handles.

Where height exceeds widths, it is recommended that handles are positioned on the vertical rails approximately 200mm up from the bottom of the moving frame rather then the cill/transom rail.

SIDE HUNG VENTILATORS WHEN USING COCKSPUR HANDLES

If the height of the ventilator frame is less than 750mm, fit one handle.

If the height of the ventilator is greater than 750mm, fit two handles.

GLAZING

All beads are cut to suit the glazing aperture on the fully assembled window for glazing either at factory or on site as required.

INTERNALLY BEADED GLAZING

Glazing beads are fitted to openings by cutting the horizontal beads square to head and cill of each vent and fixed light area. Vertical beads are cut square at both ends. Insert bottom beads and two setting blocks to ensure glass will be centralised in vertical dimension of opening (glazing blocks must be full width of cavity to fully support glass or sealed unit), then insert top bead followed by side beads, ensuring setting blocks to all 4 x corners (i.e Top, Sides & Bottom). Finish glazing by insertion of internal gaskets all round.

Alitherm 700 Parallel/Top Hung/ Side Hung Weather Performance

BS EN 1026: 2000 Air Permeability:	600Pa
BS EN 1027: 2000 Watertightness:	600Pa
BS EN 12211: 2000 Resistance to Wind Load:	2400Pa

Alitherm 700 Reversible Weather Performance

BS EN 1026: 2000 Air Permeability:	600Pa
BS EN 1027: 2000 Watertightness:	600Pa
BS EN 12211: 2000 Resistance to Wind Load:	2400Pa

Alitherm 700 U Values

Contact The Technical Department

Number	Picture	Page	Perim. mm	Mec. mm	Ix(cm4) wx(cm3)	Iy(cm4) wy(cm3)	Length	Pack pr.	MF	SA	KL	HP	M
DV515	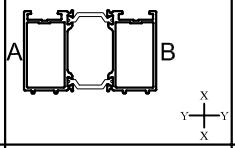	A26	356	86	27.2 ----- 7.8	14.4 ----- 6.8	6.5	1	✓	✓	✓	✓	✓
DV559	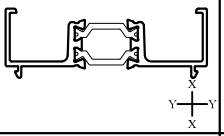	A26	305	21	14.7 ----- 4.2	1.3 ----- 1.2	6.5	1	✓	✓	✓	✓	✓
ETC048	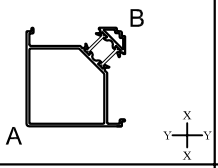	A27	414	140	42.6 ----- 5.9	42.6 ----- 5.9	6.5	1	✓	✓	✓	✓	✓
ETC152	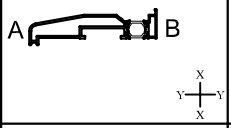	A28	434	190	127.33 ----- 18.56	5.53 ----- 2.95	6.5	1	✓	✓	✓	✓	✓
ETC157	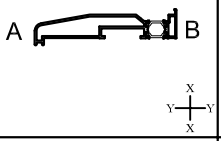	A28	464	273	169.00 ----- 22.06	7.06 ----- 3.34	6.5	1	✓	✓	✓	✓	✓
ETC158	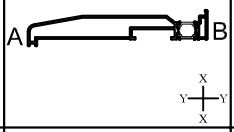	A28	545	273	330.0 ----- 33.13	9.13 ----- 4.35	6.5	1	✓	✓	✓	✓	✓
ETC178	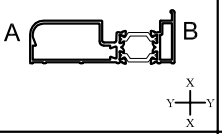	A29	305	118	33.53 ----- 7.36	3.49 ----- 2.89	6.5	1	✓	✓	✓	✓	✓
ETC179	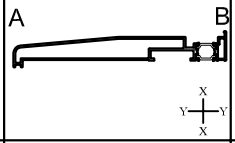	A29	626	284	519.58 ----- 44.68	9.15 ----- 4.89	6.5	1	✓	✓	✓	✓	✓
ETC517	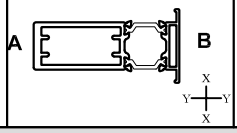	A30	298	78	39.6 — 9.8	5.3 — 2.7	6.5	1	✓	✓	✓	✓	✓

A = Outside
B = Inside

GOZ = Gold
W = White
Z = Black

MF = Mill Finish
SA = Silver Anodised
KL = Basic Colour
HP = Special Colour
M = Dual Colour

Number	Picture	Page	Perim. mm	Mec. mm	Ix(cm4) wx(cm3)	Iy(cm4) wy(cm3)	Length	Pack pr.	MF	SA	KL	HP	M
ETC572	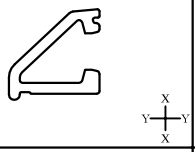	A25	82	39	- --- -	- --- -	6.5	1	✓	✓	✓	✓	
ETC710	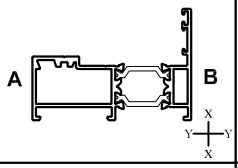	A15	344	82	26.27 --- 6.79	5.15 --- 2.88	6.5	1	✓	✓	✓	✓	✓
ETC716	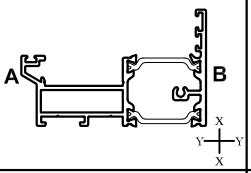	A16	414	86	32.56 ----- 7.54	5.63 ----- 3.46	6.5	1	✓	✓	✓	✓	✓
ETC717	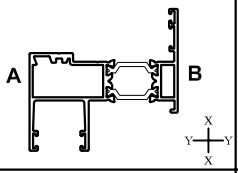	A15	433	100	31.77 ----- 8.90	10.28 ----- 3.25	6.5	1	✓	✓	✓	✓	✓
ETC718	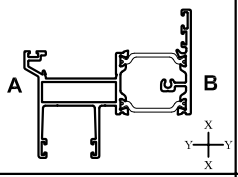	A16	524	106	37.29 ----- 9.32	10.85 ----- 3.38	6.5	1	✓	✓	✓	✓	✓
ETC720	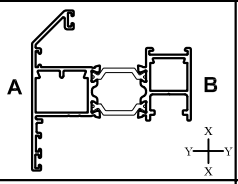	A17	466	85	31.48 --- 7.76	11.27 --- 3.42	6.5	1	✓	✓	✓	✓	✓
ETC721	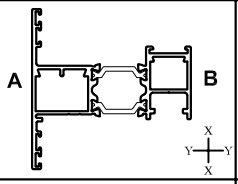	A17	441	111	32.30 --- 7.96	9.88 --- 2.91	6.5	1	✓	✓	✓	✓	✓
ETC725	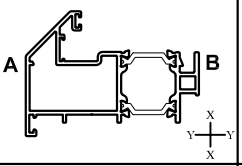	A18	420	114	32.56 --- 7.92	9.01 --- 3.54	6.5	1	✓	✓	✓	✓	✓
ETC730	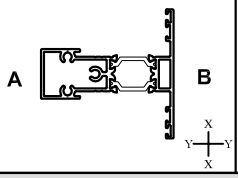	A19	393	103	30.92 --- 7.65	8.68 --- 2.54	6.5	1	✓	✓	✓	✓	✓

A = Outside
B = Inside

GOZ = Gold
W = White
Z = Black

MF = Mill Finish
SA = Silver Anodised
KL = Basic Colour
HP = Special Colour
M = Dual Colour

Number	Picture	Page	Perim. mm	Mec. mm	Ix(cm4) wx(cm3)	Iy(cm4) wy(cm3)	Length	Pack pr.	MF	SA	KL	HP	M
ETC733	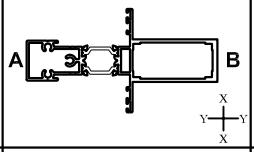	A19	505	215	121.73 ----- 18.69	13.15 ----- 3.85	6.5	1	✓	✓	✓	✓	✓
ETC736	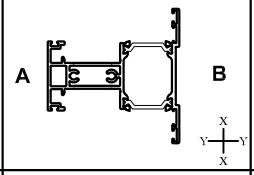	A20	536	130	48.89 ----- 12.38	14.56 ----- 3.73	6.5	1	✓	✓	✓	✓	✓
ETC737	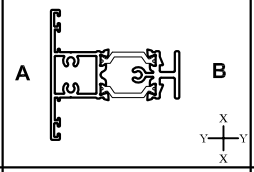	A20	381	86	17.52 ----- 5.31	4.93 ----- 1.75	6.5	1	✓	✓	✓	✓	✓
ETC745	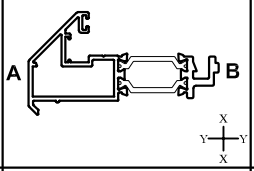	A21	328	63	24.15 --- 5.49	3.70 --- 5.49	6.5	1	✓	✓	✓	✓	✓
ETC746	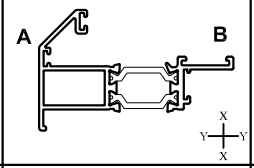	A21	328	56	13.73 --- 3.18	2.94 --- 1.53	6.5	1	✓	✓	✓	✓	✓
ETC747	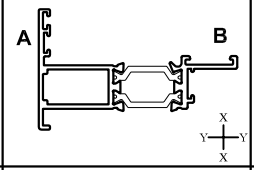	A21	312	52	15.44 --- 3.46	2.47 --- 1.36	6.5	1	✓	✓	✓	✓	✓
ETC748	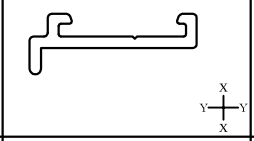	A22	69	5	- ----- -	- ----- -	6.5	1	✓	✓	✓	✓	
ETC764	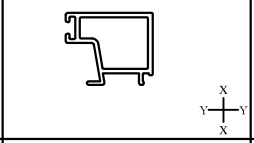	A22	105	40	- ----- -	- ----- -	6.5	1	✓	✓	✓	✓	
ETC765	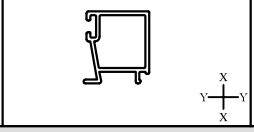	A22	92	35	- ----- -	- ----- -	6.5	1	✓	✓	✓	✓	

A = Outside
B = Inside

GOZ = Gold
W = White
Z = Black

MF = Mill Finish
SA = Silver Anodised
KL = Basic Colour
HP = Special Colour
M = Dual Colour

Number	Picture	Page	Perim. mm	Mec. mm	Ix(cm4) wx(cm3)	Iy(cm4) wy(cm3)	Length	Pack pr.	MF	SA	KL	HP	M
ETC766		A22	121	50	- ----- -	- ----- -	6.5	1	✓	✓	✓	✓	
ETC767		A23	101	34	- ----- -	- ----- -	6.5	1	✓	✓	✓	✓	
ETC768		A23	85	28	- ----- -	- ----- -	6.5	1	✓	✓	✓	✓	
ETC769	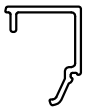	A23	109	40	- ----- -	- ----- -	6.5	1	✓	✓	✓	✓	
ETC770		A27	119	**	- ----- -	- ----- -	6.5	1	✓				
ETC771	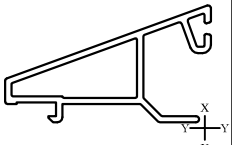	A27	159	47	- ----- -	- ----- -	6.5	1	✓	✓	✓	✓	
ETC775	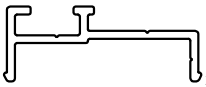	A27	119	54	- ----- -	- ----- -	6.5	1	✓	✓	✓	✓	
PCX15	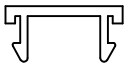 PVC	A25	63	-	- ----- -	- ----- -	4	1	✓				
VL72	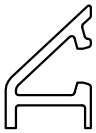	A25	101	32	- ----- -	- ----- -	6.5	5	✓	✓	✓	✓	

A = Outside B = Inside	GOZ = Gold W = White Z = Black	MF = Mill Finish SA = Silver Anodised KL = Basic Colour HP = Special Colour M = Dual Colour

smart architectural aluminium

Alitherm 700

PROFILES : TECHNICAL INFORMATION

Number	Picture	Page	Perim. mm	Mec. mm	Ix(cm4) wx(cm3)	Iy(cm4) wy(cm3)	Length	Pack pr.	MF	SA	KL	HP	M
VL75	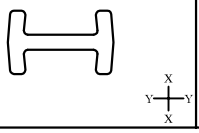	A25	54	54	- ----- -	- ----- -	6.5	1	✓				

A = Outside B = Inside	GOZ = Gold W = White Z = Black	MF = Mill Finish SA = Silver Anodised KL = Basic Colour HP = Special Colour M = Dual Colour

Primary Visible Side - - - - - - - - - - - - - - - - Secondary Visible Side — · · — · · — · · — · · — · · — · · — · · —

ETC710

Parallel/Casement Outer Frame

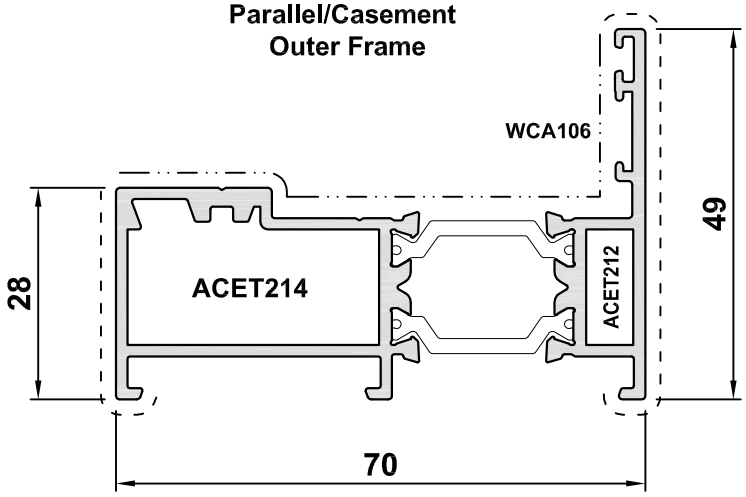

ETC717

Parallel/Casement Outer Frame for Curtain Wall

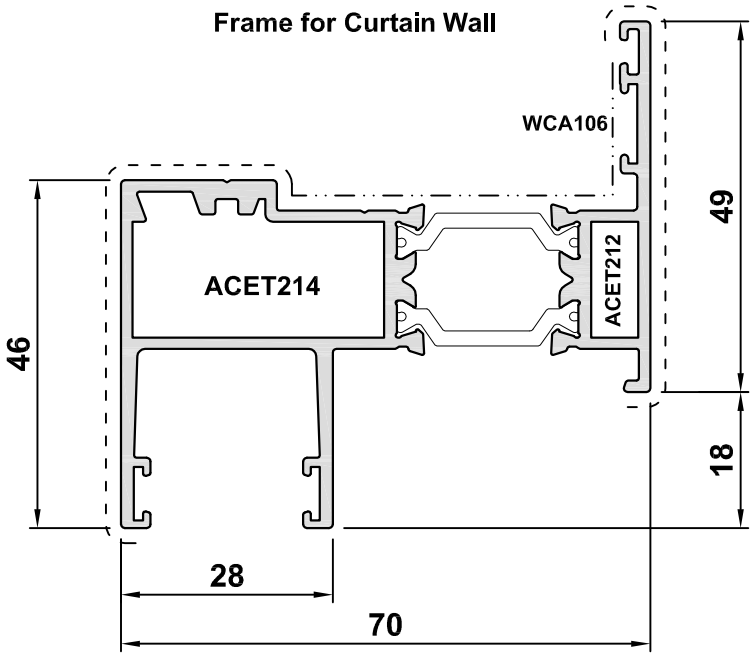

Scale 1:1

Primary Visible Side - - - - - - - - - - - - - - - - Secondary Visible Side — · — · — · — · — · — · — · —

ETC716

Reversible Outer Frame

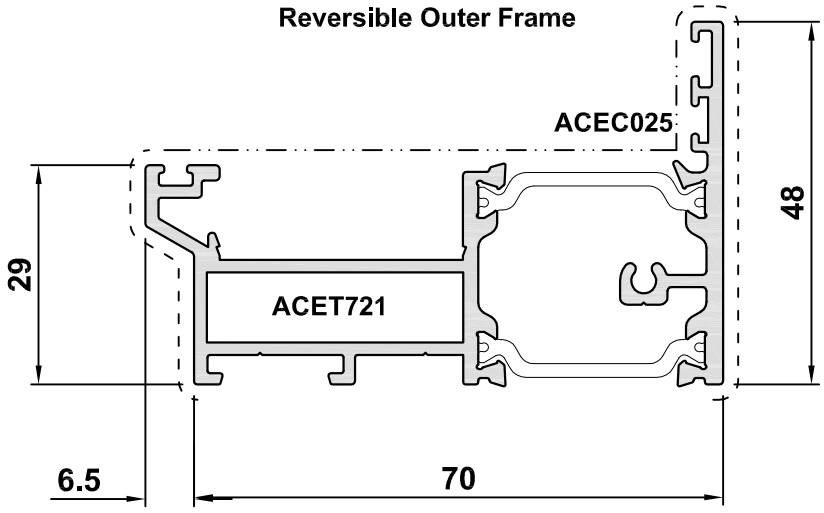

ETC718

Reversible Outer Frame

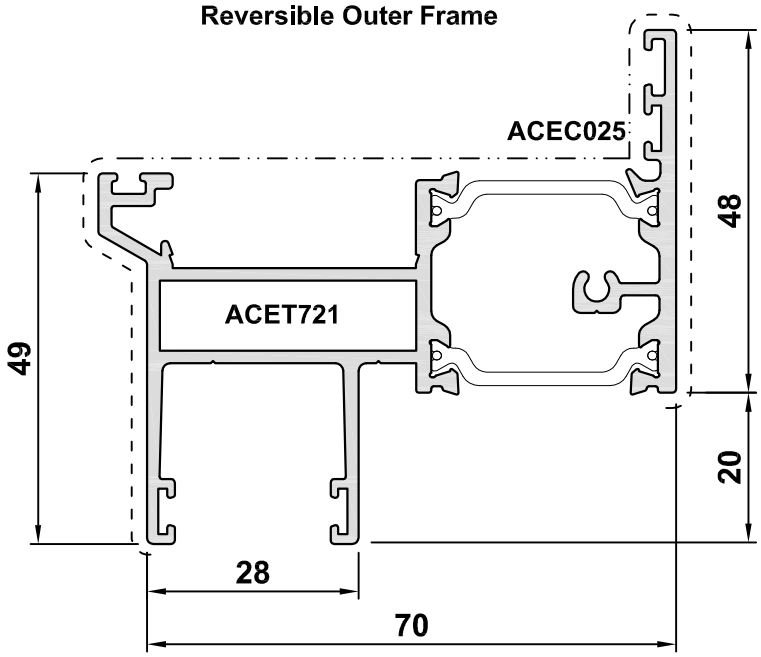

Scale 1:1

Primary Visible Side - - - - - - - - - - - - - - - - Secondary Visible Side — · — · — · — · — · — · — · —

ETC720

Chamfered Parallel/Casement Sash

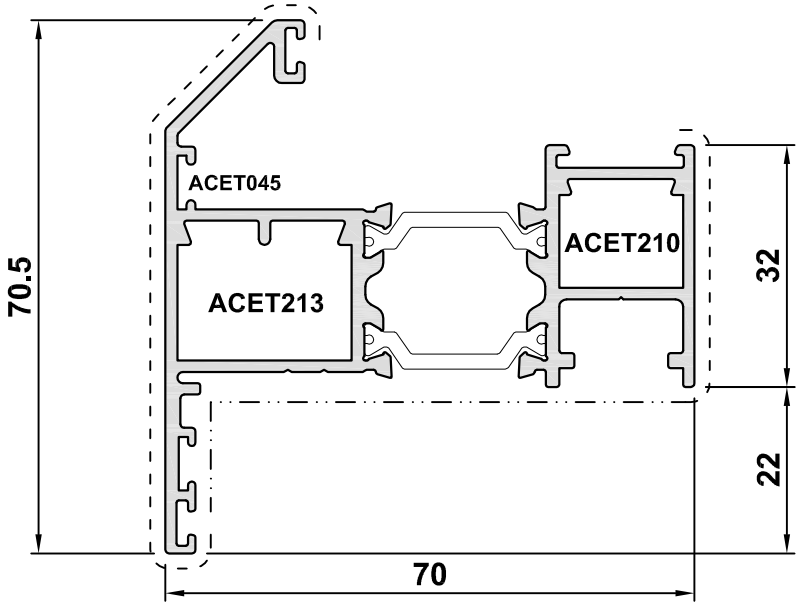

ETC721

Flat Parallel/Casement Sash

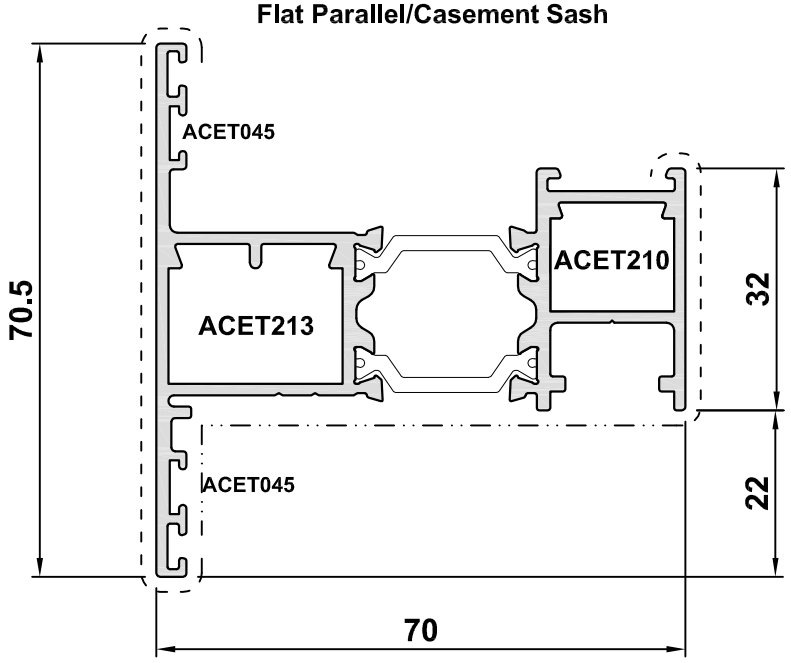

Scale 1:1

Primary Visible Side - - - - - - - - - - - - - - - - Secondary Visible Side — · · — · · — · · — · · — · · — · · — · · —

ETC725

Reversible Sash

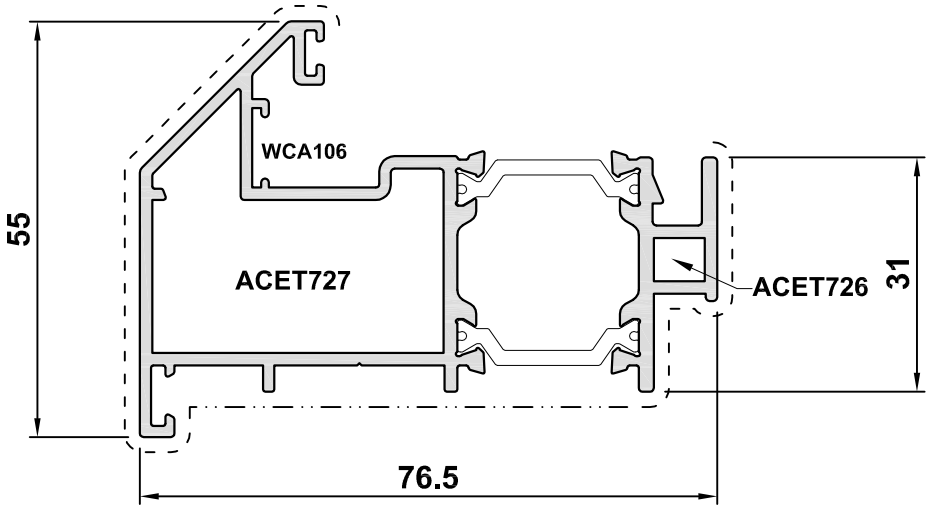

Scale 1:1

Primary Visible Side - - - - - - - - - - - - - - - - Secondary Visible Side — · · — · · — · · — · · — · · — · · — · · —

ETC730

Parallel/Casement
Transom/Mullion

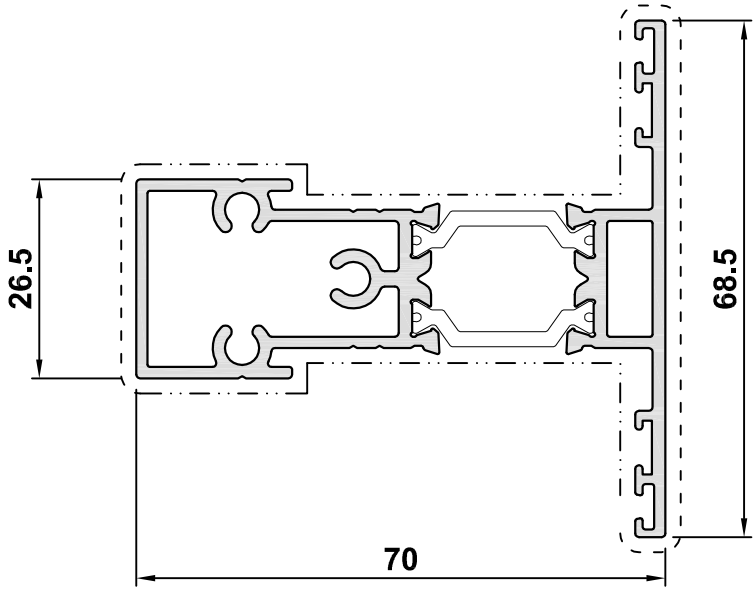

ETC733

Parallel/Casement
Transom/Mullion

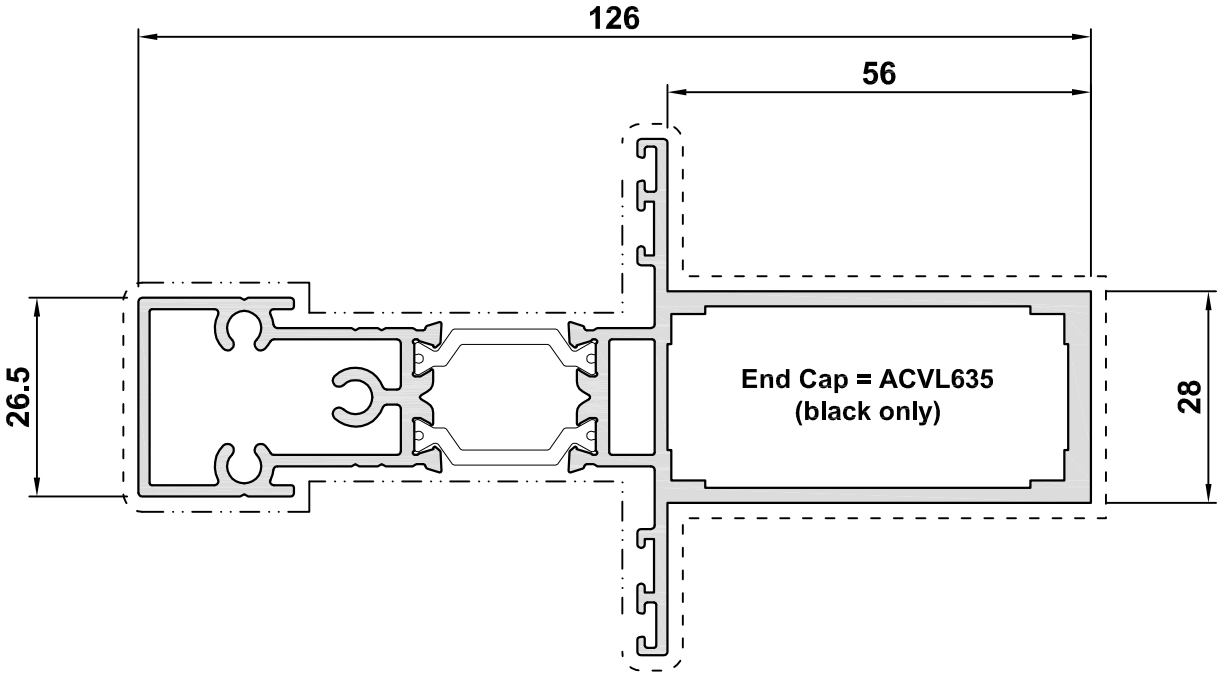

Scale 1:1

Primary Visible Side - - - - - - - - - - - - - - - - Secondary Visible Side — · · — · · — · · — · · — · · — · · — · · —

ETC736

Reversible Transom/Mullion

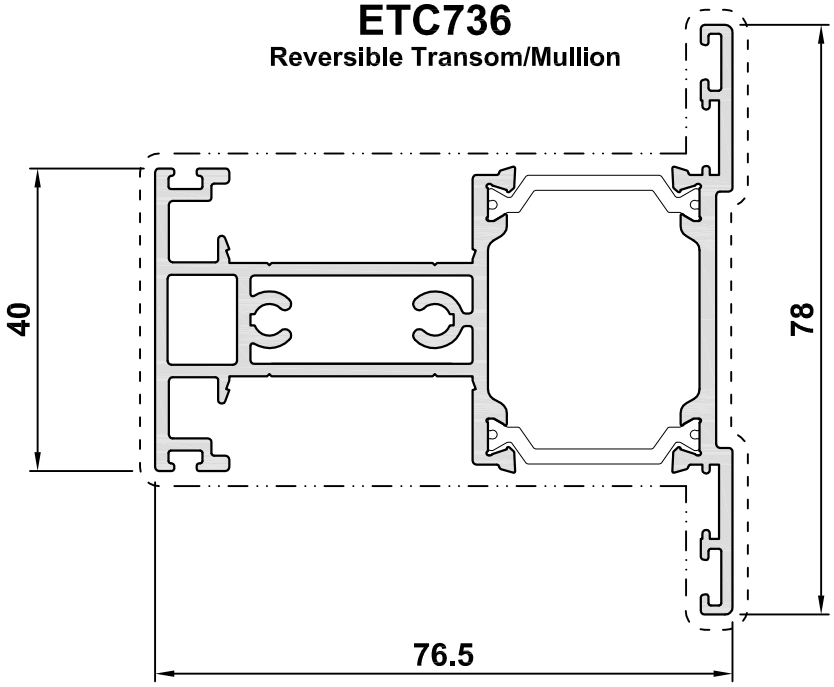

ETC737

Dummy Transom/Mullion

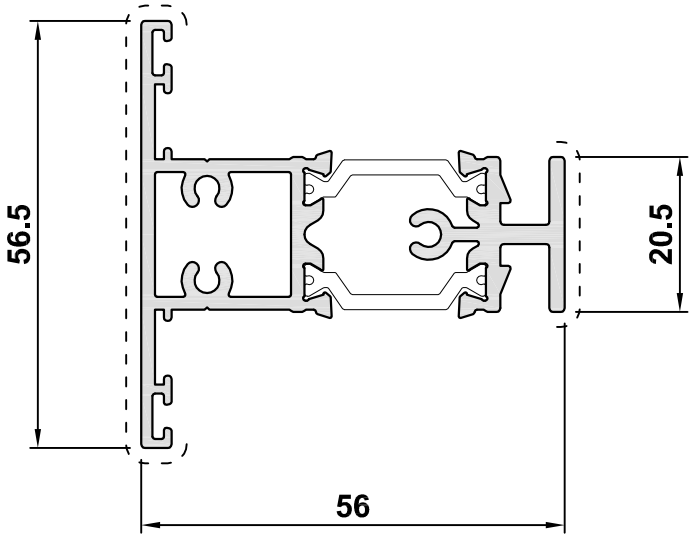

Scale 1:1

Primary Visible Side - - - - - - - - - - - - - - - - Secondary Visible Side — · · — · · — · · — · · — · · — · · — · · —

ETC745

Reverse Adaptor for ETC716 only

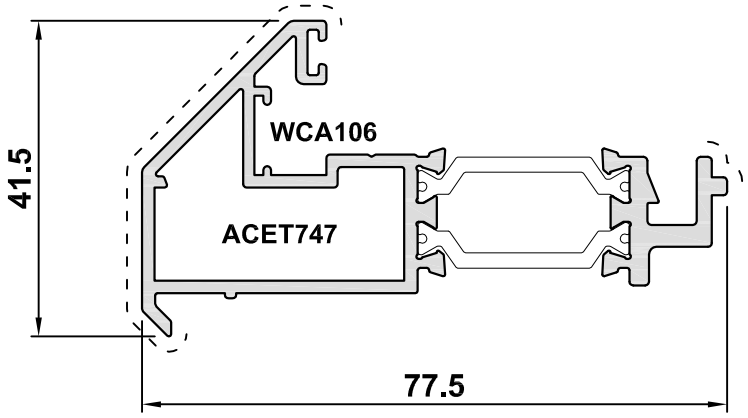

ETC746

Reverse Adaptor to Match ETC720

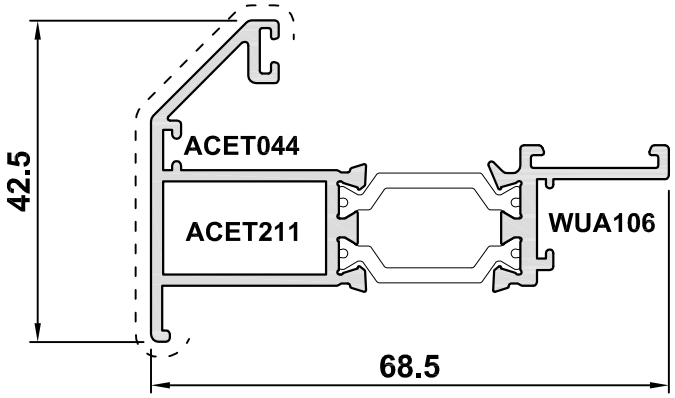

ETC747

Reverse Adaptor to Match ETC721

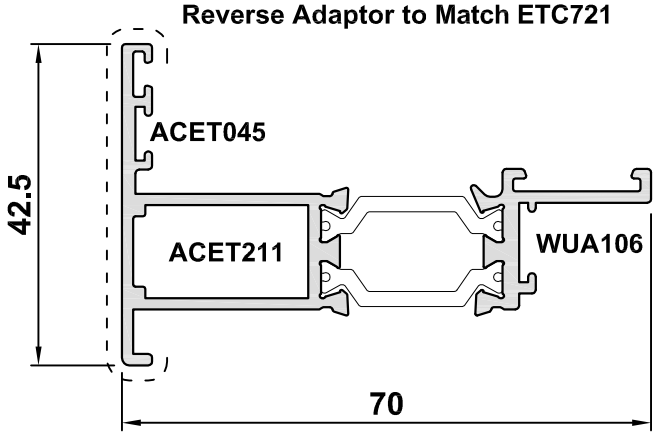

Scale 1:1

Primary Visible Side - - - - - - - - - - - - - - - - Secondary Visible Side — · · — · · — · · — · · — · · — · · — · · —

ETC748
External Bead Adaptor

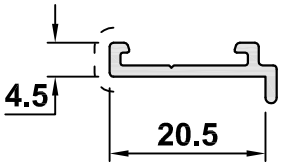

ETC765
28mm Glazing Bead

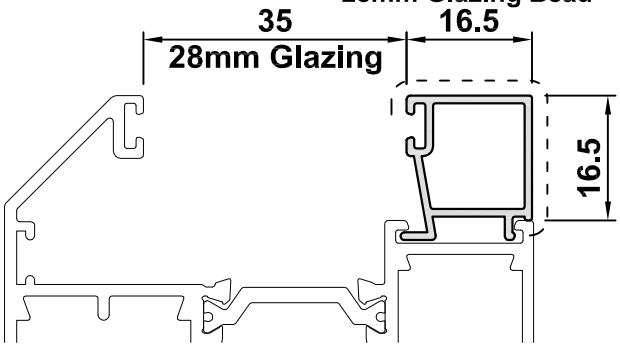

ETC720

ETC766
28mm Glazing Bead

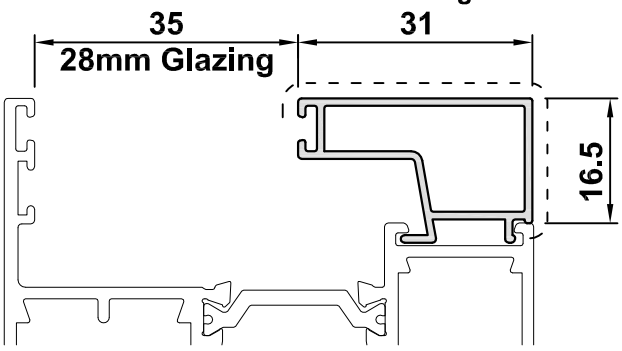

ETC721

ETC764
36mm Glazing Bead

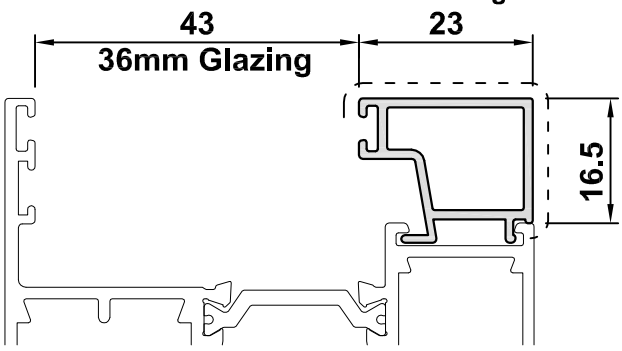

ETC721

Note:
ETC765 may be used with ETC721 to achieve 42mm glazing

Scale 1:1

Primary Visible Side - - - - - - - - - - - - - - - - Secondary Visible Side — · · — · · — · · — · · — · · — · · — · · —

ETC767

28mm Glazing Bead

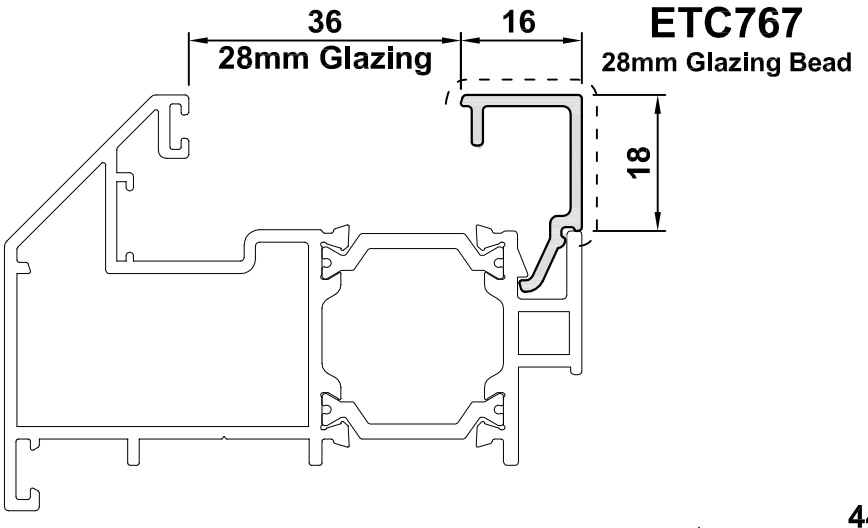

ETC768

36mm Glazing Bead

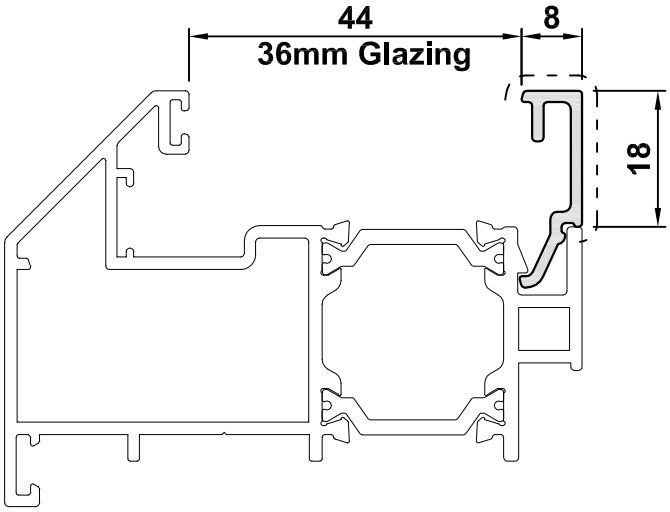

ETC769

24mm Glazing Bead

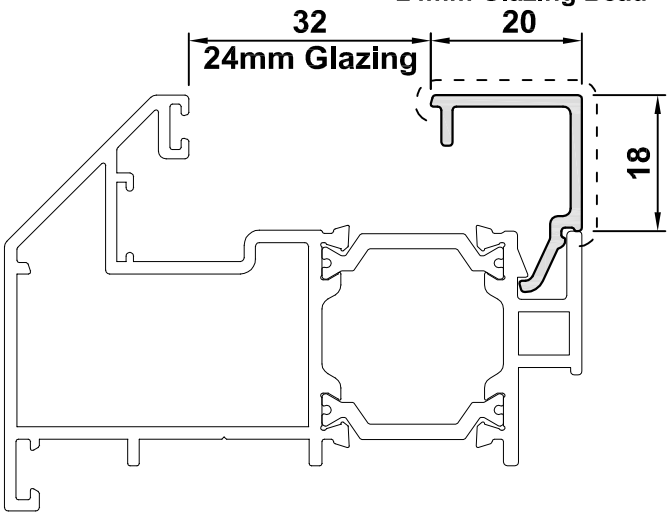

Scale 1:1

Primary Visible Side Secondary Visible Side

ETC770

Glazing Adaptor

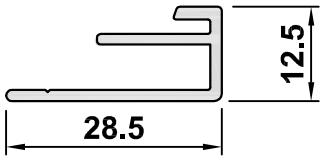

ETC771

24mm Glazing Bead

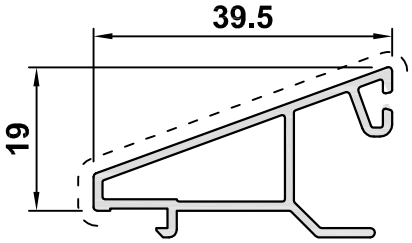

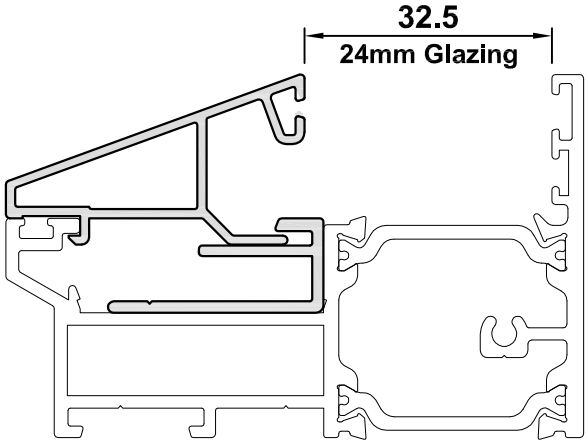

ETC775

Cill Infill

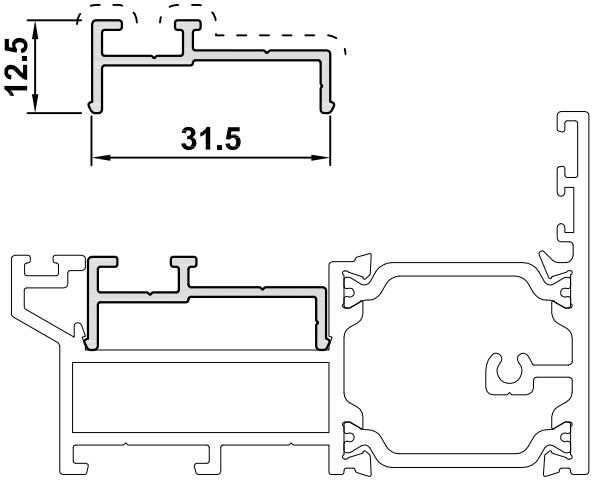

Scale 1:1

Primary Visible Side - Secondary Visible Side

PCX15
Cover Profile

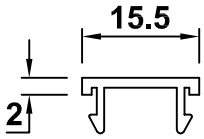

PVC

VL72
Weather Drip

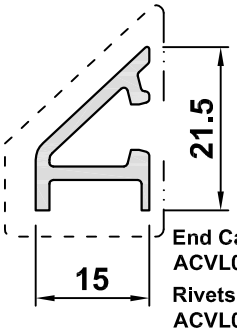

End Caps:
ACVL059
Rivets:
ACVL061

ETC572
Weather Drip

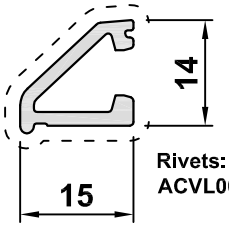

Rivets:
ACVL061

VL75
Coupler

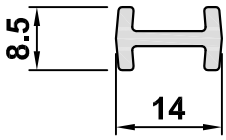

Scale 1:1

Primary Visible Side | Secondary Visible Side

DV515

42mm Head Extension

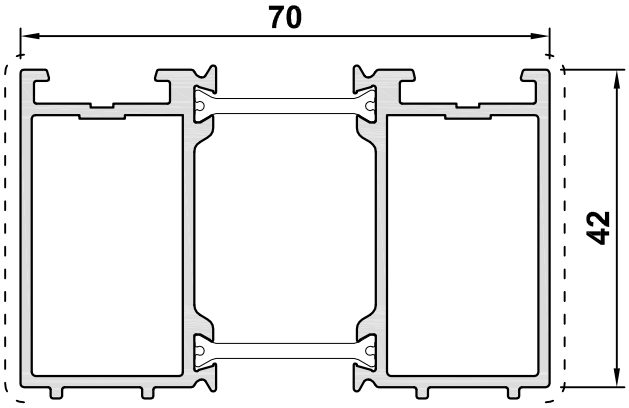

DV559

20mm Head Extension

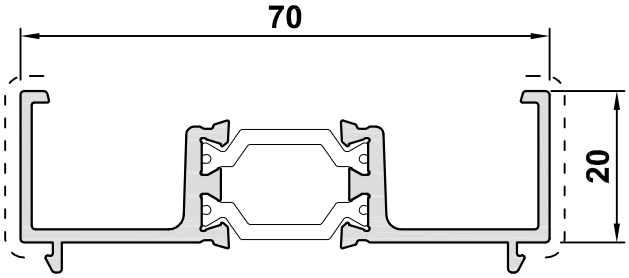

Scale 1:1

Primary Visible Side

Secondary Visible Side

ETC048

90° Corner Post

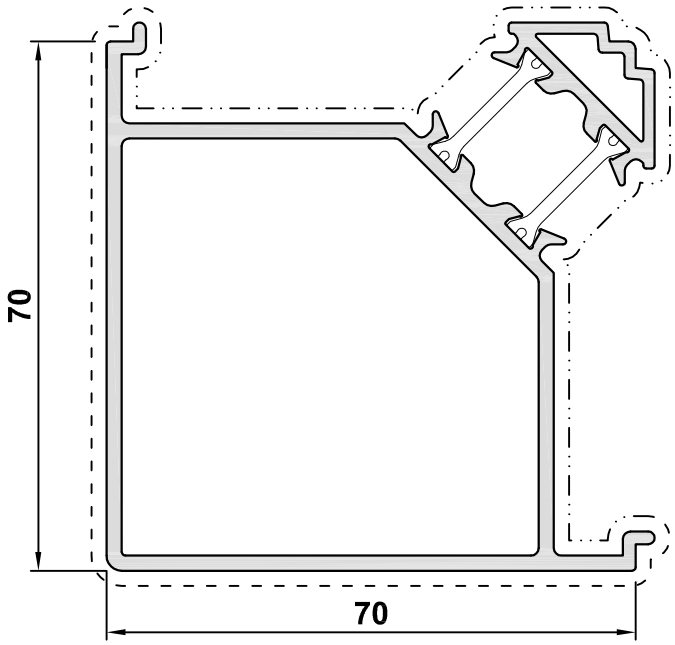

Scale 1:1

Primary Visible Side

Secondary Visible Side

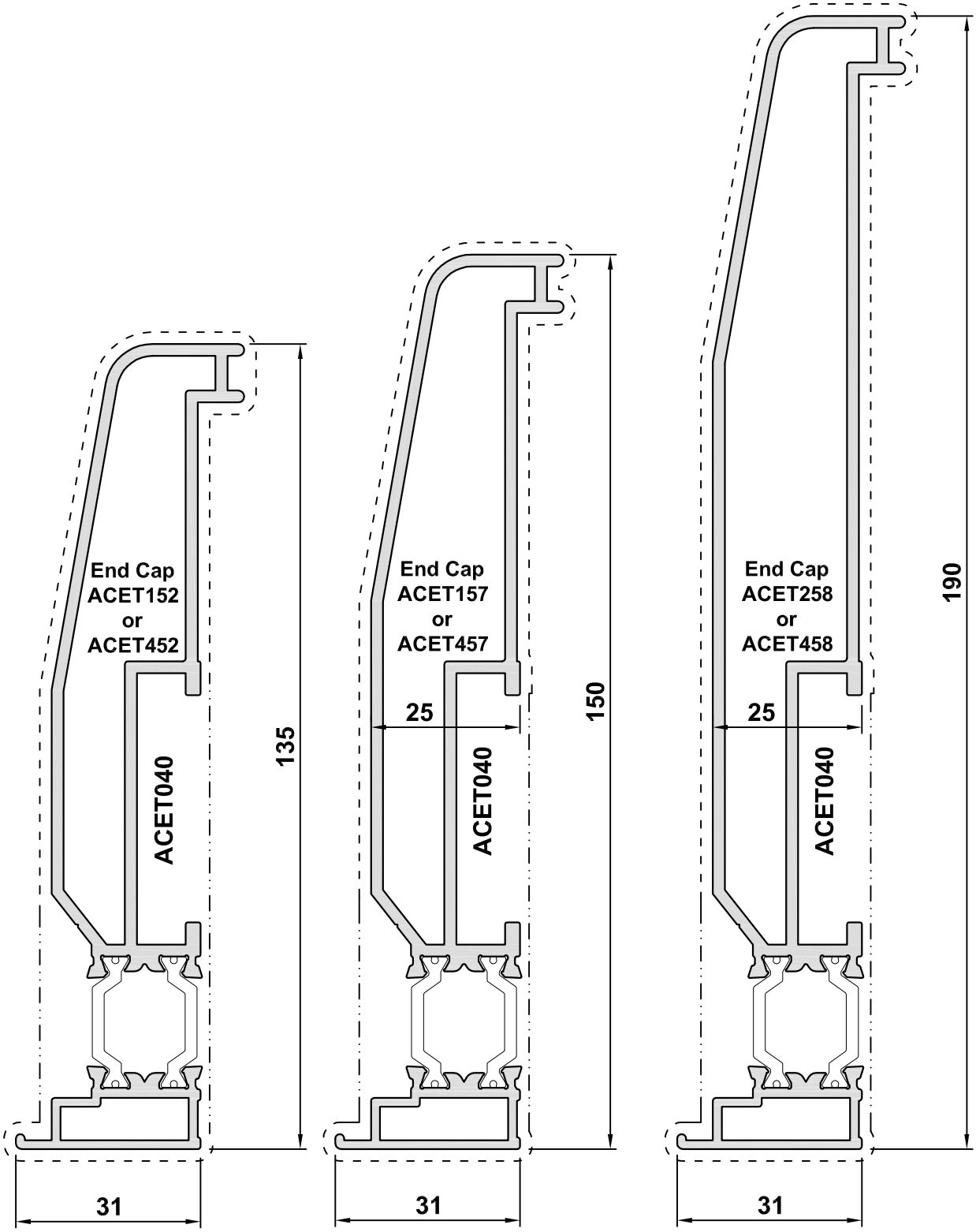

ETC152
135mm Cill

ETC157
150mm Cill

ETC158
190mm Cill

Scale 1:1

Primary Visible Side

Secondary Visible Side

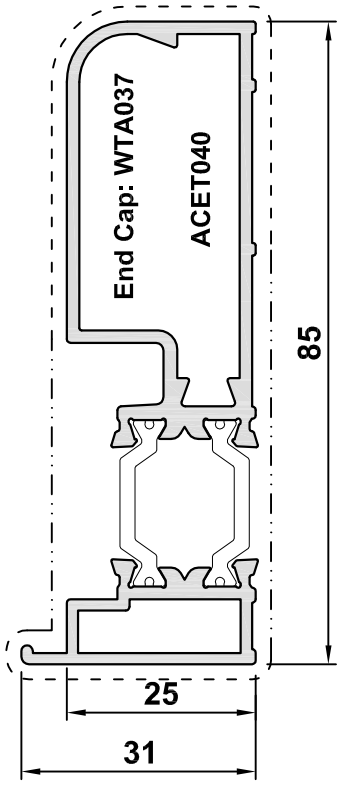

ETC178

85mm Cill

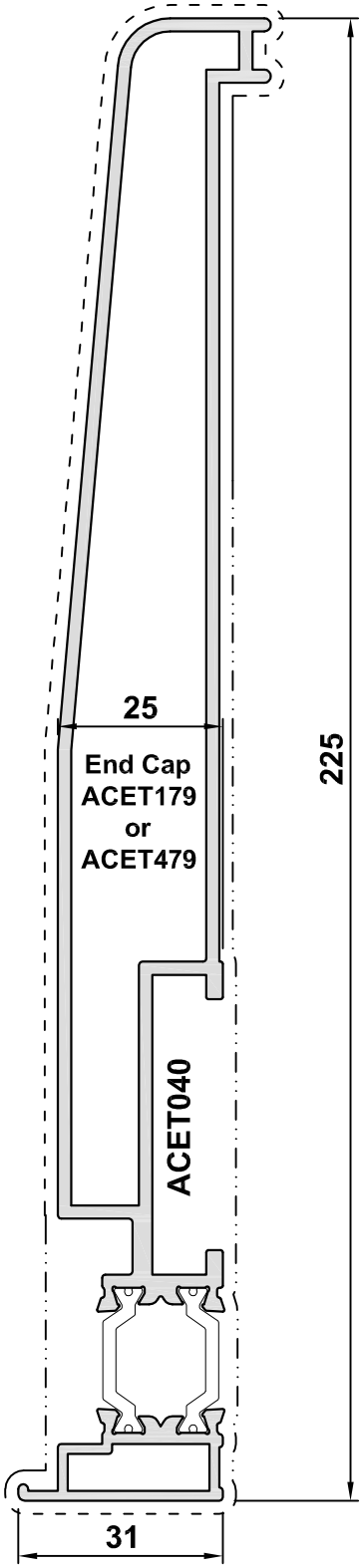

ETC179

NB:This Profile Only - SCALED TO FIT

Scale 1:1

Primary Visible Side

Secondary Visible Side

ETC517

25mm Coupler

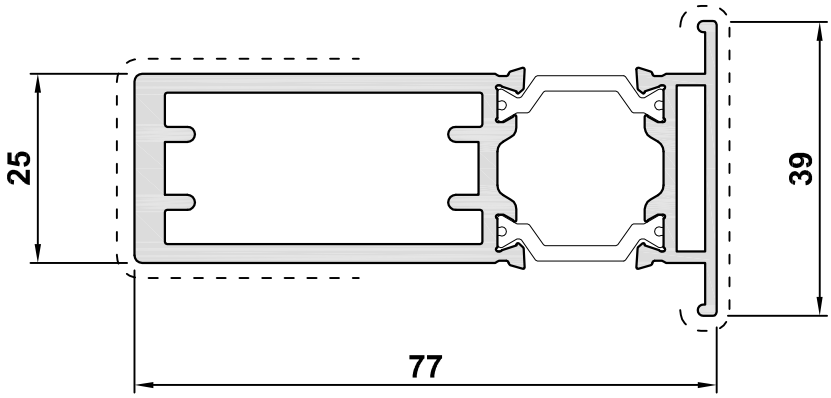

Scale 1:1

Section B

Alitherm 700
Accessories
Photos & Drawings

Image	Part Code	Pack	Unit	Application	Colour	
	ACDR052 **Transom Screw**	**200**	**Pack**	**ETC730** **ETC731**	MF SA KL HP M GOZ W Z PC	
	ACDV268 **Bubble Gasket with Arrow Head**	**100**	**m**	**ETC716**	MF SA KL HP M GOZ W Z PC	 ✓
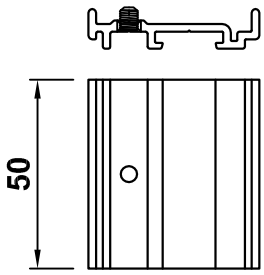	**ACET025** **Cill Fixing Bracket**	**50**	**pack**	**ACVL130** **ETC157** **ETC158** **ETC179**	MF SA KL HP M GOZ W Z PC	✓
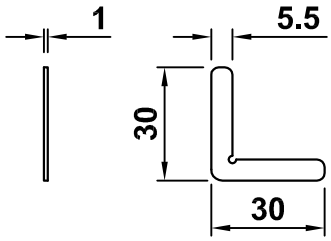	**ACEC025** **Stainless Steel Chevron**	**100**	**Pack**	**ETC716**	MF SA KL HP M GOZ W Z PC	
	ACET040 **Variable Angle Cill Joiner**	**10**	**Pack**	**ETC152** **ETC157** **ETC158** **ETC178** **ETC179**	MF SA KL HP M GOZ W Z PC	

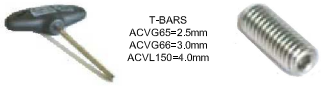

MF = Mill Finish
SA = Silver Anodised
KL = Basic Colour
HP = Special Colour
M = Dual Colour
GOZ = Gold
PC = Polished Chrome
W = White
Z = Black

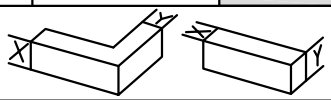

Image	Part Code	Pack	Unit	Application	Colour	
	ACET041 **Cill Nose Bracket**	**1**	**Each**	**ETC152** **ETC157** **ETC158** **ETC178** **ETC179**	MF SA KL HP M GOZ W Z PC	✓
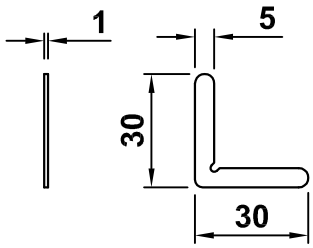	**ACET044** **Stainless Steel Chevron**	**100**	**Pack**		MF SA KL HP M GOZ W Z PC	
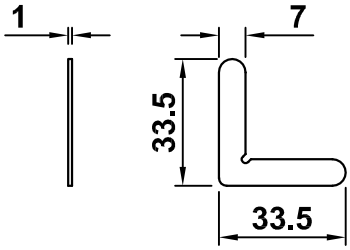	**ACET045** **Stainless Steel Chevron**	**100**	**Pack**	**ETC720** **ETC721** **ETC747**	MF SA KL HP M GOZ W Z PC	
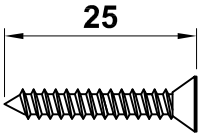	**ACET060** **No. 7 x 25 S/S Self Tapping CSK Screw**	**100**	**pack**		MF SA KL HP M GOZ W Z PC	
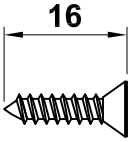	**ACET064** **No. 8 x 16 S/S Self Tapping CSK Screw**	**100**	**pack**		MF SA KL HP M GOZ W Z PC	

MF = Mill Finish
SA = Silver Anodised
KL = Basic Colour
HP = Special Colour
M = Dual Colour
GOZ = Gold
PC = Polished Chrome
W = White
Z = Black

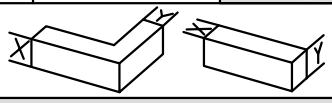

Image	Part Code	Pack	Unit	Application	Colour	
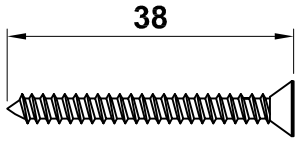	ACET066 No. 7 x 38 S/S Self Tapping CSK Screw	100	pack		MF	
					SA	
					KL	
					HP	
					M	
					GOZ	
					W	
					Z	
					PC	
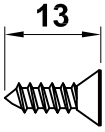	ACET067 No. 7 x 13 S/S Self Tapping CSK Screw	100	pack		MF	
					SA	
					KL	
					HP	
					M	
					GOZ	
					W	
					Z	
					PC	
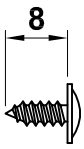	ACET068 No. 8 x 10 S/S Self Tapping Flange Screw	100	pack	Friction Hinges	MF	
					SA	
					KL	
					HP	
					M	
					GOZ	
					W	
					Z	
					PC	
	ACET080L/R Cockspur Handle	1	each	ETC725 ACET783	MF	
					SA	✓
					KL	
					HP	
					M	
					GOZ	✓
					W	✓
					Z	✓
					PC	
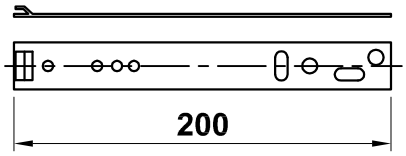	ACET130 Galvanised Steel Fixing Strap 200mm x 25mm x 1.5mm	100	pack	ETC710 ETC716	MF	
					SA	
					KL	
					HP	
					M	
					GOZ	
					W	
					Z	
					PC	

MF = Mill Finish
SA = Silver Anodised
KL = Basic Colour
HP = Special Colour
M = Dual Colour

GOZ = Gold
PC = Polished Chrome
W = White
Z = Black

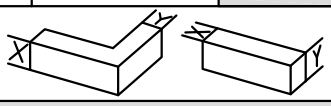

Image	Part Code	Pack	Unit	Application	Colour	
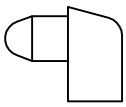	ACET131 Drainage Cap	100	Pack		MF	
					SA	
					KL	
					HP	
					M	
					GOZ	
					W	✓
					Z	✓
					PC	
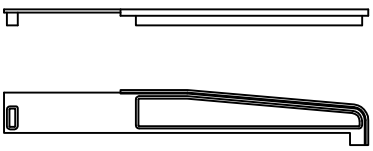	ACET157 Cill End Cap (pair)	10	pair	ETC157	MF	
					SA	
					KL	
					HP	
					M	
					GOZ	
					W	✓
					Z	✓
					PC	
	ACET160 Flipper Gasket	100	m	ETC710 ETC720 ETC721	MF	✓
					SA	
					KL	
					HP	
					M	
					GOZ	
					W	
					Z	
					PC	
	ACET165L/R Espag Handle with 9mm Spindle	1	Each	ETC720 ETC721	MF	
					SA	✓
					KL	
					HP	
					M	
					GOZ	
					W	✓
					Z	✓
					PC	✓
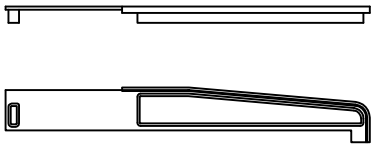	ACET179 Cill End Cap (pair)	10	pair	ETC179	MF	
					SA	
					KL	
					HP	
					M	
					GOZ	
					W	✓
					Z	✓
					PC	

MF = Mill Finish
SA = Silver Anodised
KL = Basic Colour
HP = Special Colour
M = Dual Colour

GOZ = Gold
PC = Polished Chrome
W = White
Z = Black

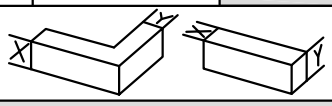

Image	Part Code	Pack	Unit	Application	Colour
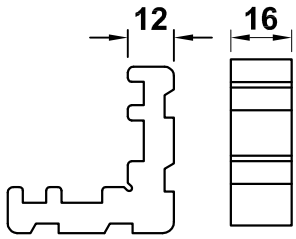	ACET210 Cleat	24	Pack	ETC720 ETC721	MF SA KL HP M GOZ W Z PC
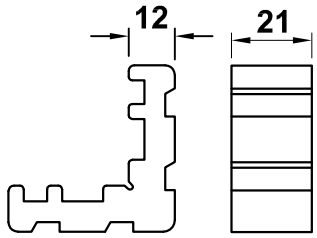	ACET211 Cleat	24	Pack	ETC746 ETC747	MF SA KL HP M GOZ W Z PC
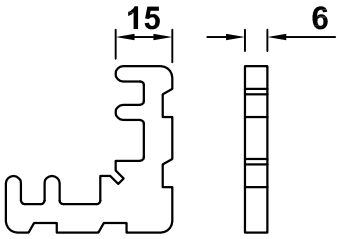	ACET212 Cleat	24	Pack	ETC710 ETC717	MF ✓ SA KL HP M GOZ W Z PC
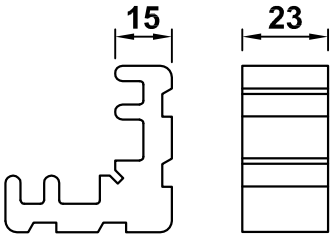	ACET213 Cleat	24	Pack	ETC720 ETC721	MF SA KL HP M GOZ W Z PC
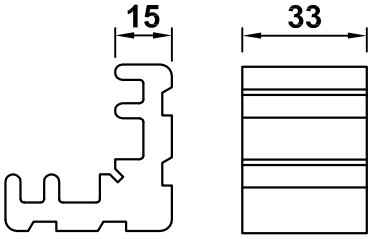	ACET214 Cleat	24	Pack	ETC710 ETC717	MF SA KL HP M GOZ W Z PC

T-BARS
ACVG65=2.5mm
ACVG66=3.0mm
ACVL150=4.0mm

Screw (Grub)

MF = Mill Finish
SA = Silver Anodised
KL = Basic Colour
HP = Special Colour
M = Dual Colour

GOZ = Gold
PC = Polished Chrome
W = White
Z = Black

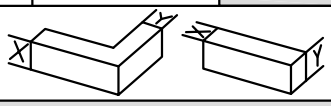

Image	Part Code	Pack	Unit	Application	Colour	
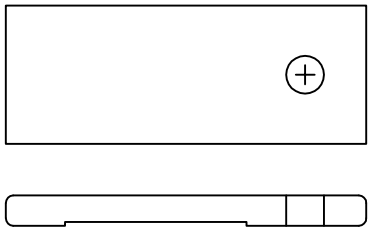	ACET215 Transom Bracket Packer	50	Pack	ETC730	MF	
					SA	
					KL	
					HP	
					M	
					GOZ	
					W	
					Z	
					PC	
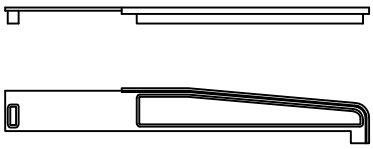	ACET258 Cill End Cap (Pair)	10	Pair	ETC158	MF	
					SA	
					KL	
					HP	
					M	
					GOZ	
					W	✓
					Z	✓
					PC	
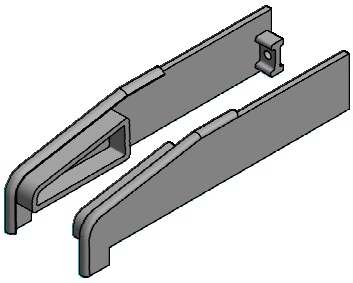	ACET452 Cast Cill End Caps	1	Pair	ETC152	MF	✓
					SA	
					KL	✓
					HP	✓
					M	
					GOZ	
					W	✓
					Z	✓
					PC	
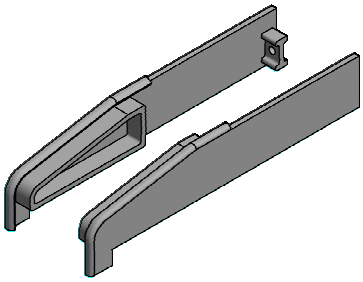	ACET457 Cast Cill End Caps	1	Pair	ETC157	MF	✓
					SA	
					KL	✓
					HP	✓
					M	
					GOZ	
					W	✓
					Z	✓
					PC	
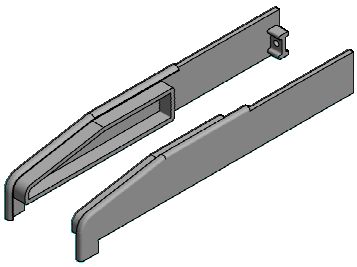	ACET458 Cast Cill End Caps	1	Pair	ETC158	MF	✓
					SA	
					KL	✓
					HP	✓
					M	
					GOZ	
					W	✓
					Z	✓
					PC	

MF = Mill Finish
SA = Silver Anodised
KL = Basic Colour
HP = Special Colour
M = Dual Colour

GOZ = Gold
PC = Polished Chrome
W = White
Z = Black

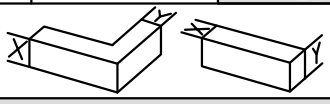

Image	Part Code	Pack	Unit	Application	Colour	
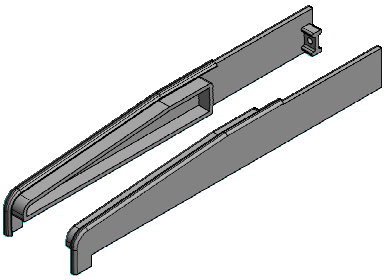	ACET479 Cast Cill End Caps	1	Pair	ETC179	MF	✓
					SA	
					KL	✓
					HP	✓
					M	
					GOZ	
					W	✓
					Z	✓
					PC	
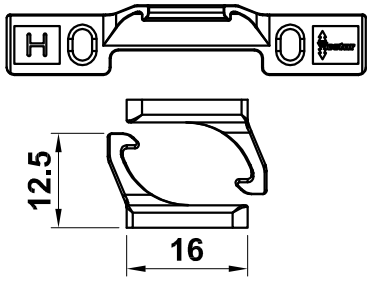	ACET516 16mm Cavity Hinge Protector 4 Per Set (2 pairs)	50	sets		MF	
					SA	
					KL	
					HP	
					M	
					GOZ	
					W	
					Z	
					PC	
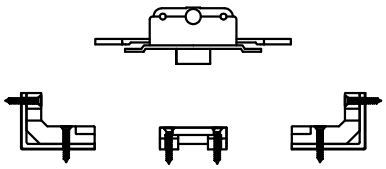	ACET710 Basic Lock Kit For Parallel & Casement windows only	1	Each	ACET165 ETC720 ETC721	MF	✓
					SA	
					KL	
					HP	
					M	
					GOZ	
					W	
					Z	
					PC	
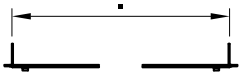	ACET711 280mm Shootbolt Rods	1	Pair	ETC720 ETC721 ACET710	MF	
					SA	
					KL	
					HP	
					M	
					GOZ	
					W	
					Z	
					PC	
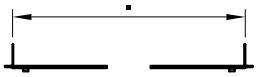	ACET712 410mm Shootbolt Rods	1	Pair	ETC720 ETC721 ACET710	MF	
					SA	
					KL	
					HP	
					M	
					GOZ	
					W	
					Z	
					PC	

T-BARS
ACVG65=2.5mm
ACVG66=3.0mm
ACVL150=4.0mm

Screw (Grub)

MF = Mill Finish
SA = Silver Anodised
KL = Basic Colour
HP = Special Colour
M = Dual Colour

GOZ = Gold
PC = Polished Chrome
W = White
Z = Black

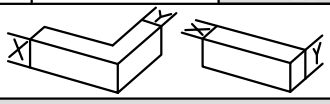

Image	Part Code	Pack	Unit	Application	Colour	
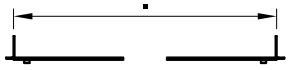	**ACET713** **540mm Shootbolt Rods**	**1**	**Pair**	**ETC720** **ETC721** **ACET710**	MF SA KL HP M GOZ W Z PC	
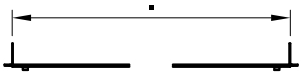	**ACET714** **670mm Shootbolt Rods**	**1**	**Pair**	**ETC720** **ETC721** **ACET710**	MF SA KL HP M GOZ W Z PC	
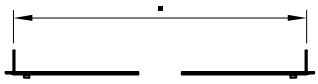	**ACET715** **800mm Shootbolt Rods**	**1**	**Pair**	**ETC720** **ETC721** **ACET710**	MF ✓ SA KL HP M GOZ W Z PC	
	ACET716 **Shootbolt Extension Rod**	**1**	**Pair**	**ACET710** **ACET712** **ACET713** **ACET714**	MF ✓ SA KL HP M GOZ W Z PC	
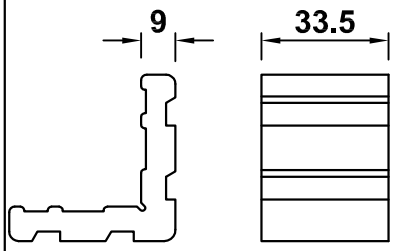	**ACET721** **Crimping Cleat**	**24**	**Pack**	**ETC716**	MF SA KL HP M GOZ W Z PC	

MF = Mill Finish
SA = Silver Anodised
KL = Basic Colour
HP = Special Colour
M = Dual Colour
GOZ = Gold
PC = Polished Chrome
W = White
Z = Black

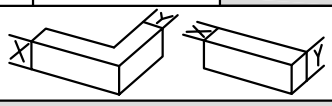

Image	Part Code	Pack	Unit	Application	Colour
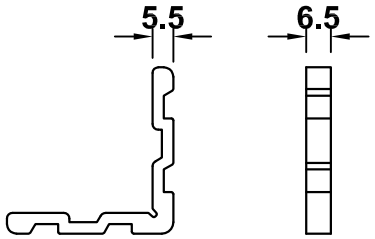	ACET726 Crimping Cleat	24	Pack	ETC725	MF SA KL HP M GOZ W Z PC
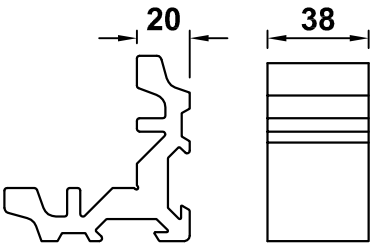	ACET727 Crimping Cleat	24	Pack	ETC725	MF SA KL HP M GOZ W Z PC
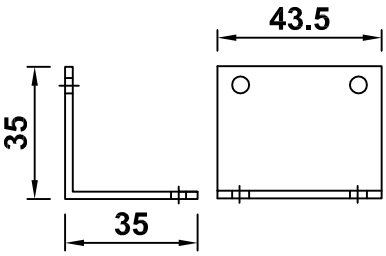	ACET730 Cruciform Bracket	10	Pack	ETC730	MF SA KL HP M GOZ W Z PC
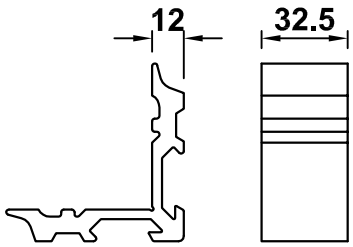	ACET747 Crimping Cleat	24	Pack	ETC745	MF SA KL HP M GOZ W Z PC
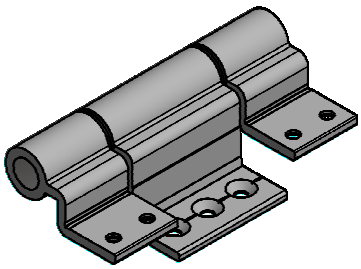	ACET750 Weight Limits Per Pair: Top/Bottom Hung = 150kg Side Hung = 120kg	1	each	ETC710 ETC717 ETC720 ETC721 ETC730 ETC733	MF ✓ SA KL ✓ HP ✓ M GOZ W ✓ Z ✓ PC

MF = Mill Finish
SA = Silver Anodised
KL = Basic Colour
HP = Special Colour
M = Dual Colour

GOZ = Gold
PC = Polished Chrome
W = White
Z = Black

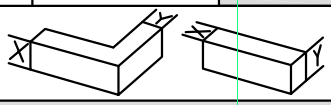

Image	Part Code	Pack	Unit	Application	Colour
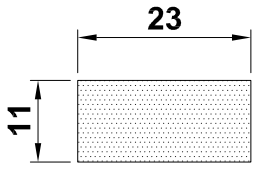	ACET755 ETC716 & ETC725 Foam Insulation Length = 1250mm	10	Pack	ETC716 ETC725	MF SA KL HP M GOZ W Z PC
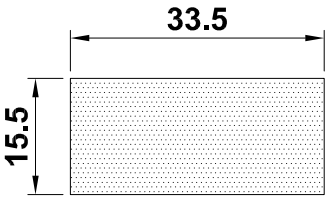	ACET757 ETC736 Foam Insulation Length = 1250mm	10	Pack	ETC736	MF SA KL HP M GOZ W Z PC
	ACET765L/R Espag Handle with 45mm Spindle & 50mm Screws	5	Pack	ACET771 ACET772 ACET773 ACET774 ACET775 ETC725	MF SA KL HP M GOZ W Z PC
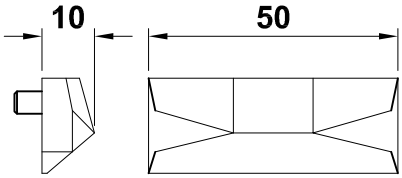	ACET783 10mm Handle Wedge	1	Pair	ETC080	MF SA KL HP M GOZ W ✓ Z ✓ PC
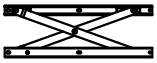	ACETPPS35 L/R 350mm Parallel Hinge	1	Pair	ETC720 ETC721	MF SA KL HP M GOZ W Z PC

MF = Mill Finish
SA = Silver Anodised
KL = Basic Colour
HP = Special Colour
M = Dual Colour

GOZ = Gold
PC = Polished Chrome
W = White
Z = Black

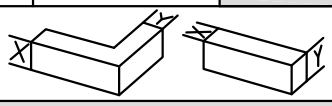

Image	Part Code	Pack	Unit	Application	Colour	
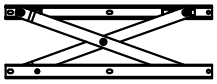	**ACETPPS45 L/R** **450mm Parallel Hinge**	1	Pair	ETC720 ETC721	MF	✓
					SA	
					KL	
					HP	
					M	
					GOZ	
					W	
					Z	
					PC	
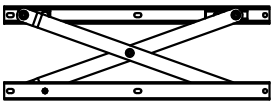	**ACETPPS67 L/R** **670mm Parallel Hinge**	1	Pair	ETC720 ETC721	MF	
					SA	
					KL	
					HP	
					M	
					GOZ	
					W	
					Z	
					PC	
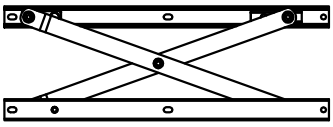	**ACETPPS995 L/R** **930mm Parallel Hinge**	1	Pair	ETC720 ETC721	MF	
					SA	
					KL	
					HP	
					M	
					GOZ	
					W	
					Z	
					PC	
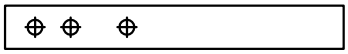	**ACETPRS01** **Restrictor for Parallel Stay**	1	Each	ACETPPS45 ACETPPS95	MF	
					SA	
					KL	
					HP	
					M	
					GOZ	
					W	
					Z	
					PC	
	ACETPRS02 **Restrictor for Parallel Stay**	1	Each	ACETPRS02	MF	
					SA	
					KL	
					HP	
					M	
					GOZ	
					W	
					Z	
					PC	

MF = Mill Finish
SA = Silver Anodised
KL = Basic Colour
HP = Special Colour
M = Dual Colour
GOZ = Gold
PC = Polished Chrome
W = White
Z = Black

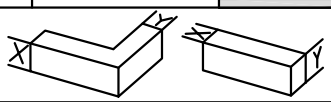

Image	Part Code	Pack	Unit	Application	Colour
	ACET789 **Vee Block for ETC718**	1	Each	ETC718	MF SA KL HP M GOZ W Z PC
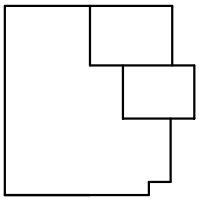	**ACET790** **Vee Block for ETC716**	1	Each	ETC716	MF SA KL HP M GOZ W Z PC
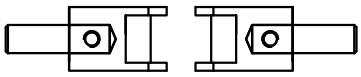	**ACET791** **Punches for ETC716**	1	Pair	ETC716	MF SA KL HP M GOZ W Z PC
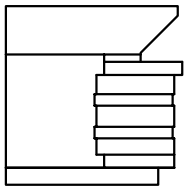	**ACET792** **Vee Block for ETC725**	1	Each	ETC725	MF SA KL HP M GOZ W Z PC
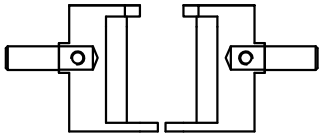	**ACET793** **Punches for ETC725**	1	Pair	ETC725	MF SA KL HP M GOZ W Z PC

T-BARS
ACVG65=2.5mm
ACVG66=3.0mm
ACVL150=4.0mm

Screw (Grub)

MF = Mill Finish
SA = Silver Anodised
KL = Basic Colour
HP = Special Colour
M = Dual Colour

GOZ = Gold
PC = Polished Chrome
W = White
Z = Black

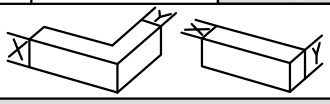

Image	Part Code	Pack	Unit	Application	Colour	
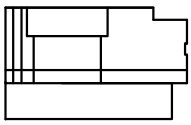	**ACET794** **Vee Block for ETC745**	**1**	**Each**	**ETC745**	MF	
					SA	
					KL	
					HP	
					M	
					GOZ	
					W	
					Z	
					PC	
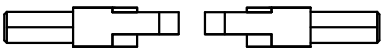	**ACET795** **Punches for ETC745**	**1**	**Pair**	**ETC745**	MF	
					SA	
					KL	
					HP	
					M	
					GOZ	
					W	
					Z	
					PC	
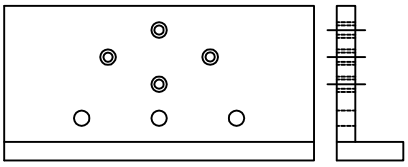	**ACET797** **Drill Jig for Keeps**	**1**	**Each**	**RV070** **2WES0336**	MF	
					SA	
					KL	
					HP	
					M	
					GOZ	
					W	
					Z	
					PC	
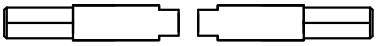	**ACET799** **Punches for ETC718**	**1**	**Pair**	**ETC718**	MF	
					SA	
					KL	
					HP	
					M	
					GOZ	
					W	
					Z	
					PC	
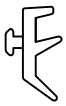	**ACET835** **4mm External Captive Gasket**	**200**	**m**		MF	✓
					SA	
					KL	
					HP	
					M	
					GOZ	
					W	
					Z	✓
					PC	

T-BARS
ACVG65=2.5mm
ACVG66=3.0mm
ACVL150=4.0mm

Screw (Grub)

MF = Mill Finish
SA = Silver Anodised
KL = Basic Colour
HP = Special Colour
M = Dual Colour
GOZ = Gold
PC = Polished Chrome
W = White
Z = Black

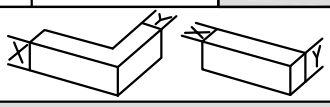

Image	Part Code	Pack	Unit	Application	Colour	
	ACET840 **5mm Low Line Wedge Gasket**	**150**	**m**		MF SA KL HP M GOZ W Z PC	 ✓
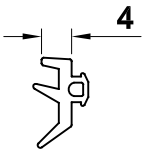	**ACET841** **4mm Low Line External EPDM Gasket**	**200**	**m**		MF SA KL HP M GOZ W Z PC	 ✓
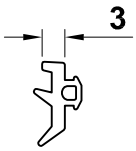	**ACET842** **3mm Low Line External EPDM Gasket**	**200**	**m**		MF SA KL HP M GOZ W Z PC	 ✓
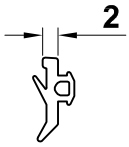	**ACET843** **2mm Low Line External EPDM Gasket**	**200**	**m**		MF SA KL HP M GOZ W Z PC	 ✓
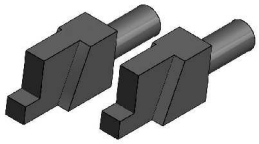	**ACET904** **Crimping Punches**	**1**	**Pair**	**ETC746** **ETC747**	MF SA KL HP M GOZ W Z PC	

T-BARS
ACVG65=2.5mm
ACVG66=3.0mm
ACVL150=4.0mm

Screw (Grub)

MF = Mill Finish
SA = Silver Anodised
KL = Basic Colour
HP = Special Colour
M = Dual Colour
GOZ = Gold
PC = Polished Chrome
W = White
Z = Black

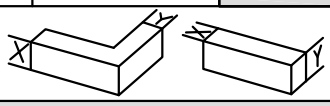

Image	Part Code	Pack	Unit	Application	Colour
	ACET970 Vee Block	1	Each	ETC710 ETC717	MF SA KL HP M GOZ W Z PC
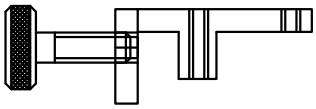	ACET798 Drill Jig	1	Each	ETC716 ETC736	MF SA KL HP M GOZ W Z PC
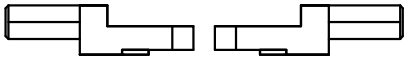	ACET799 Punches for ETC718	1	Each	ETC718	MF SA KL HP M GOZ W Z PC
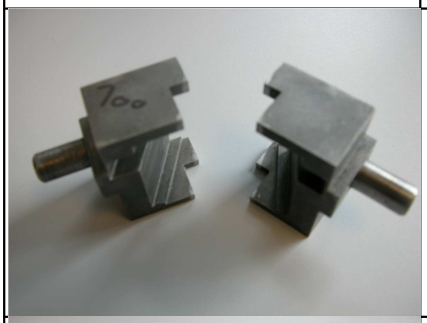	ACET971 Crimping Punches	1	Pair	ETC710 ETC717	MF SA KL HP M GOZ W Z PC
	ACET972 Vee Block	1	Each	ETC720 ETC721	MF SA KL HP M GOZ W Z PC

T-BARS
ACVG65=2.5mm
ACVG66=3.0mm
ACVL150=4.0mm

Screw (Grub)

MF = Mill Finish
SA = Silver Anodised
KL = Basic Colour
HP = Special Colour
M = Dual Colour

GOZ = Gold
PC = Polished Chrome
W = White
Z = Black

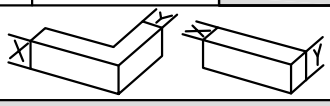

Image	Part Code	Pack	Unit	Application	Colour	
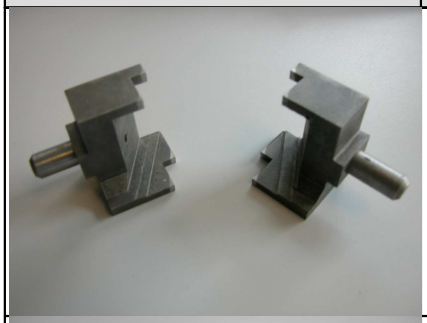	**ACET973** **Crimping Punches**	1	Each	ETC720 ETC721	MF SA KL HP M GOZ W Z PC	
	ACET974 **Vee Block**	1	Each		MF SA KL HP M GOZ W Z PC	
	ACGSL045 **Drainage Cover Cap**	100	pack		MF SA KL HP M GOZ W Z PC	 ✓ ✓
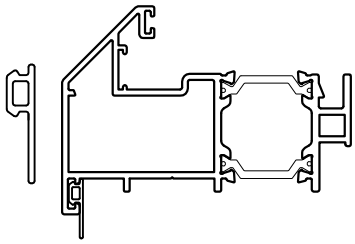	**ACRV030** **Flipper Gasket**	50	m	ETC725	MF SA KL HP M GOZ W Z PC	 ✓
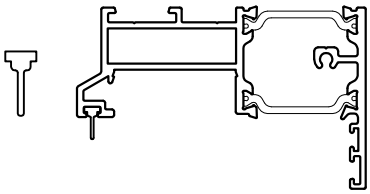	**ACRV031** **Head Gasket**	50	m	ETC716 ETC736	MF SA KL HP M GOZ W Z PC	 ✓

T-BARS
ACVG65=2.5mm
ACVG66=3.0mm
ACVL150=4.0mm

Screw (Grub)

MF = Mill Finish
SA = Silver Anodised
KL = Basic Colour
HP = Special Colour
M = Dual Colour

GOZ = Gold
PC = Polished Chrome
W = White
Z = Black

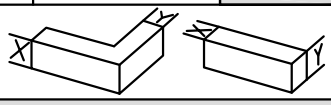

Image	Part Code	Pack	Unit	Application	Colour	
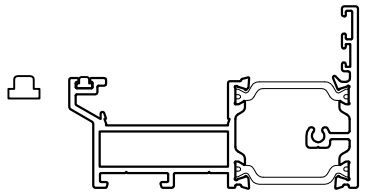	**ACRV032** **Infill Section**	50	m	ETC716 ETC736	MF SA KL HP M GOZ W Z PC	 ✓
	ACVG31 **3mm Retaining Gasket**	200	m		MF SA KL HP M GOZ W Z PC	
	ACVG34 **5mm Wedge Gasket**	100	m		MF SA KL HP M GOZ W Z PC	 ✓
	ACW20038 **4-3mm Tear-away Low-line EPDM Wedge Gasket** **Black Only**	200	m	ETC746 ETC747	MF SA KL HP M GOZ W Z PC	 ✓
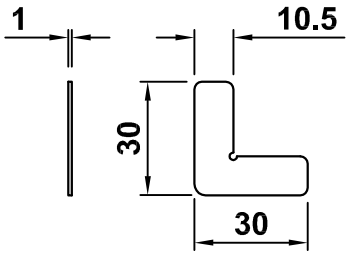	**WCA106** **Stainless Steel Chevron**	100	Pack	ETC725 ETC745	MF SA KL HP M GOZ W Z PC	

MF = Mill Finish
SA = Silver Anodised
KL = Basic Colour
HP = Special Colour
M = Dual Colour
GOZ = Gold
PC = Polished Chrome
W = White
Z = Black

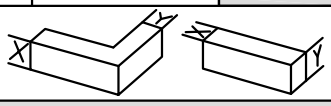

Image	Part Code	Pack	Unit	Application	Colour
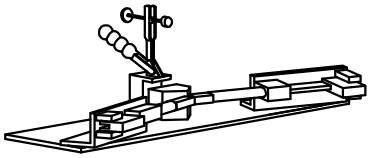	**WUT024HSZA** **Manual Crimper** **Note: Vee blocks & punches are sold separately**	**1**	**each**		MF SA KL HP M GOZ W Z PC

T-BARS
ACVG65=2.5mm
ACVG66=3.0mm
ACVL150=4.0mm

Screw (Grub)

MF = Mill Finish
SA = Silver Anodised
KL = Basic Colour
HP = Special Colour
M = Dual Colour
GOZ = Gold
PC = Polished Chrome
W = White
Z = Black

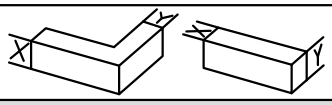

Alitherm 700

STANDARD ACCESSORIES

Image	Part Code	Pack	Unit	Application	Colour	
	ACMX09700 Alu. Polish	1	each		MF	✓
					SA	
					KL	
					HP	
					M	
					GOZ	
					W	
					Z	
					PC	
	ACMX09761 Maxi Gloss	1	each		MF	
					SA	
					KL	
					HP	
					M	
					GOZ	
					W	
					Z	
					PC	
	ACMX09762 Alu. Bright	1	each		MF	
					SA	
					KL	
					HP	
					M	
					GOZ	
					W	
					Z	
					PC	
	ACMX09763 Teflon Spray	1	each		MF	
					SA	
					KL	
					HP	
					M	
					GOZ	
					W	
					Z	
					PC	
	ACMX09764 Maxi Clean	1	each		MF	
					SA	
					KL	
					HP	
					M	
					GOZ	
					W	
					Z	
					PC	

T-BARS
ACVG65=2.5mm
ACVG66=3.0mm
ACVL150=4.0mm

Screw (Grub)

MF = Mill Finish
SA = Silver Anodised
KL = Basic Colour
HP = Special Colour
M = Dual Colour
GOZ = Gold
W = White
Z = Black

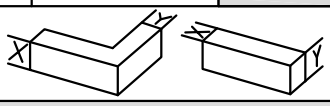

smart architectural aluminium

Alitherm 700

STANDARD ACCESSORIES

Image	Part Code	Pack	Unit	Application	Colour
	ACMX09765 Alu. Cleaner	1	each		MF SA KL HP M GOZ W Z PC
	ACMX09770 Roll & Wrap 100mm	1	each		MF SA KL HP M GOZ W Z PC
	ACMX09775 Grip Handwrap	1	each		MF SA KL HP M GOZ W Z PC
	ACMX09801 Protective Tape 50mm	1	each		MF SA KL HP M GOZ W Z PC
	ACMX09802 Protective Tape 70mm	1	each		MF SA KL HP M GOZ W Z PC

T-BARS
ACVG65=2.5mm
ACVG66=3.0mm
ACVL150=4.0mm

Screw (Grub)

MF = Mill Finish
SA = Silver Anodised
KL = Basic Colour
HP = Special Colour

M = Dual Colour
GOZ = Gold
W = White
Z = Black

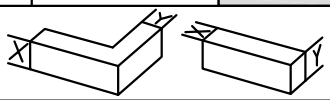

ISSUED : MAY 2015

STANDARD ACCESSORIES

Image	Part Code	Pack	Unit	Application	Colour	
	ACMX09803 Protective Tape 100mm	1	each		MF	
					SA	
					KL	
					HP	
					M	
					GOZ	
					W	
					Z	
					PC	
	ACMX09830 Rubber Sealant	1	each		MF	
					SA	
					KL	
					HP	
					M	
					GOZ	
					W	
					Z	
					PC	
	ACSIL04 Sealing Glue Order with suffix of KL colour (eg.ACSIL04KL005) or BL=Black/WP=White/ CL=Clear	1	each		MF	
					SA	
					KL	✓
					HP	
					M	
					GOZ	
					W	✓
					Z	✓
					PC	
	ACSIL08 Silicon Gun	1	each		MF	
					SA	
					KL	
					HP	
					M	
					GOZ	
					W	
					Z	
					PC	
	ACSIL013 Glue for Mitre	1	each		MF	
					SA	
					KL	
					HP	
					M	
					GOZ	
					W	
					Z	
					PC	

T-BARS
ACVG65=2.5mm
ACVG66=3.0mm
ACVL150=4.0mm

Screw (Grub)

MF = Mill Finish
SA = Silver Anodised
KL = Basic Colour
HP = Special Colour

M = Dual Colour
GOZ = Gold
W = White
Z = Black

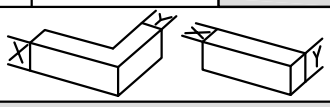

STANDARD ACCESSORIES

Image	Part Code	Pack	Unit	Application	Colour	
	ACSIL014 **Anti-Corrosion Coating**	**1**	**each**		MF	✓
					SA	
					KL	
					HP	
					M	
					GOZ	
					W	
					Z	
					PC	

T-BARS
ACVG65=2.5mm
ACVG66=3.0mm
ACVL150=4.0mm

Screw (Grub)

MF = Mill Finish
SA = Silver Anodised
KL = Basic Colour
HP = Special Colour

M = Dual Colour
GOZ = Gold
W = White
Z = Black

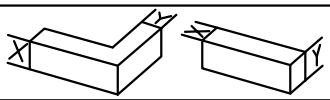

ISSUED : MAY 2015

Friction Hinge Stays - For Open Out Casement

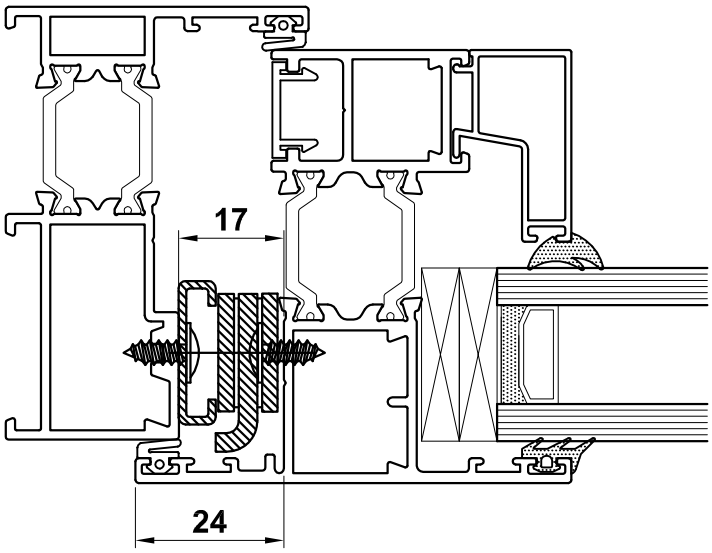

Hinge Code Top Hung	Hinge Length (mm)	Max Vent Weight (kg)	Min Vent Height (mm)	Max Vent Height (mm)	Opening Angle (+/-2.5°)
ACINS10	262	40	315	640	50
ACINS12	313	50	640	800	50
ACINS16	415	65	800	1100	50
ACINS22	567	100	1090	1500	45
ACINS22W	567	100	1500	2000	20
ACINS26	680	180	2000	2500	20
Side Hung	**Hinge Length (mm)**	**Max Vent Weight (kg)**	**Min Vent Width (mm)**	**Max Vent Width (mm)**	**Opening Angle (+/-2.5°)**
ACINSSH10	262	38	327	660	85
ACINSSH16	415	55	450	838	60

Please Note:

1. Dimensions shown in table are sash sizes - not rebate sizes.
2. The minimum sash sizes for ACINS10 & ACINSSH10 can both be reduced to 281mm where cockspur handles are used.
3. Top hung height & side hung width sizes to be reduced by 2mm where size is 450mm or smaller.

Do Not Scale From This Drawing

Shootbolt Locking (Casement / Parallel)

Basic locking Kit: ACET710					
Locking Rod Part Codes	Dimension X	Rebate Size		Sash Size	
		Minimum (mm)	Maximum (mm)	Minimum (mm)	Maximum (mm)
ACET711	280	330	640	379	689
ACET712	410	590	900	639	949
ACET713	540	850	1160	899	1209
ACET714	670	1110	1420	1159	1469
ACET715	800	1370	1680	1419	1729

Note: ACET716 222-522mm Lock Extension Rod may be used on windows over 1729mm with the appropriate locking rods.

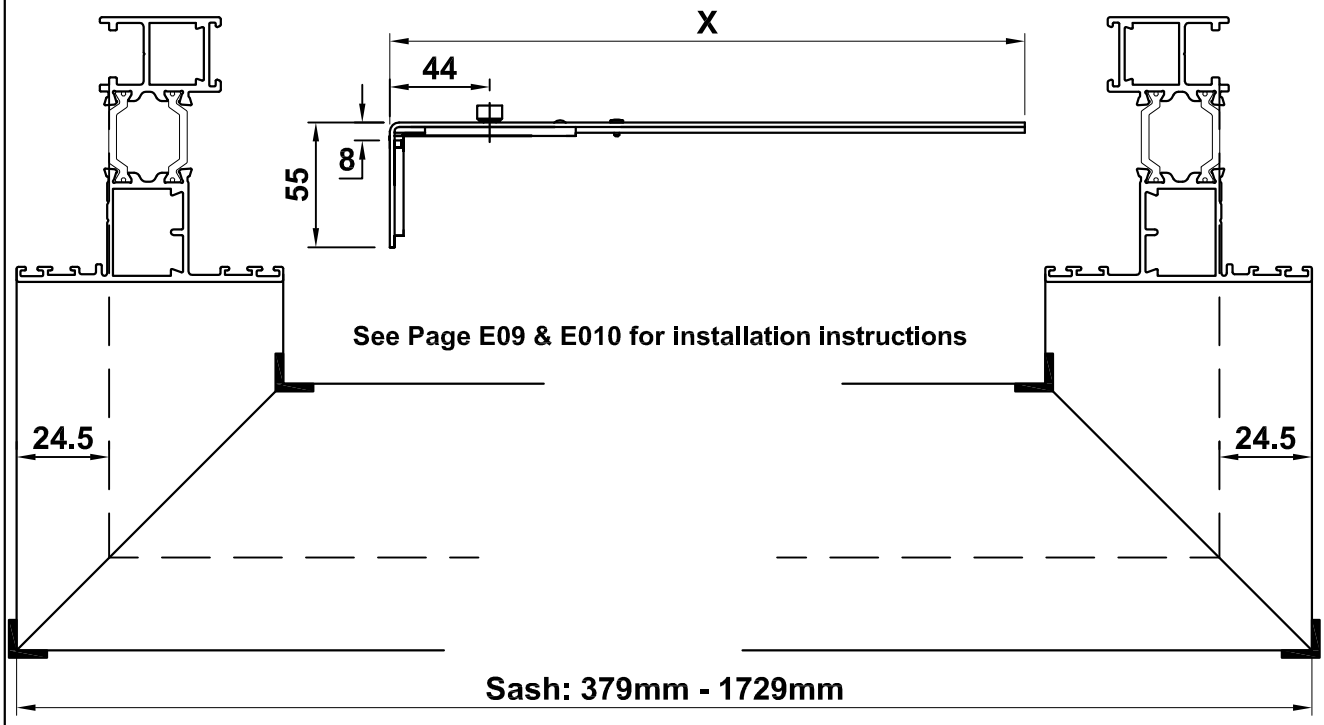

See Page E09 & E010 for installation instructions

ACET710 Kit Includes:

1 Centre Keep

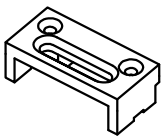

1 Pair Corner Keeps

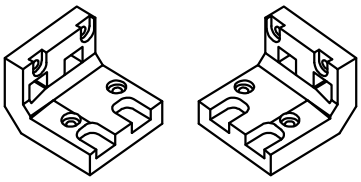

2 Corner Keep Packers

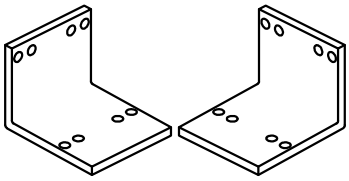

1 Gearbox

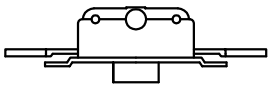

ACET716 (Sold Separately):

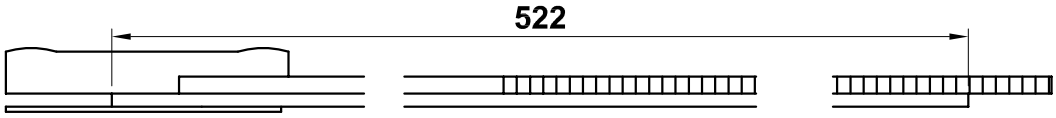

Do Not Scale From This Drawing

Off Set Parallel Hinge

Parallel Hinge Part Codes	Length (mm)	Restrictor
ACETPPS35L/R	350	N/A
ACETPPS45L/R	450	ACETPRS01
ACETPPS67L/R	670	ACETPRS02
ACETPPS95L/R	930	ACETPRS01

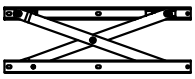

ACETPPS35

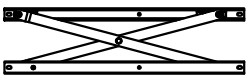

ACETPPS45

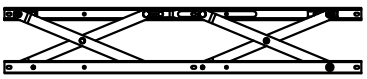

ACETPPS67

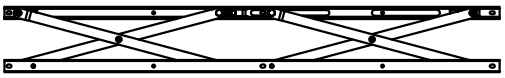

ACETPPS95

Please note that ACETPPS45, 67 & 95 will open to 250mm with automatic operators. We recommend that manually operated vents are restricted to 150mm due to the increased force required to close the vents over this dimension.

See Page E11 For Installation Instructions

See Page E12 For Hinge Selection

Do Not Scale From This Drawing

Reversible Window Locking

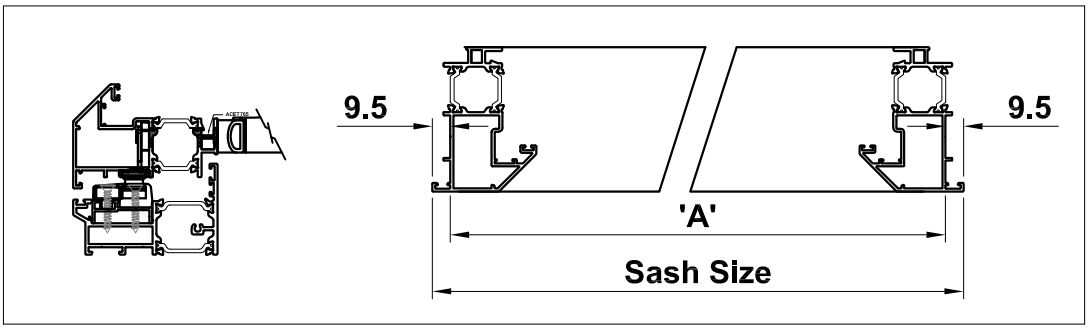

Part Code	Rod Length (mm)	Number of Keeps	Sash Rebate Size ('A')	
			Minimum	Maximum
ACET771L	335	2	340	505
ACET771R				
ACET772L	500	2	506	755
ACET772R				
ACET773L	750	2	756	1005
ACET773R				
ACET774L	1000	4	1006	1255
ACET774R				
ACET775L	1250	4	1256	1400
ACET775R				

Note: To Suit Handle ACET765

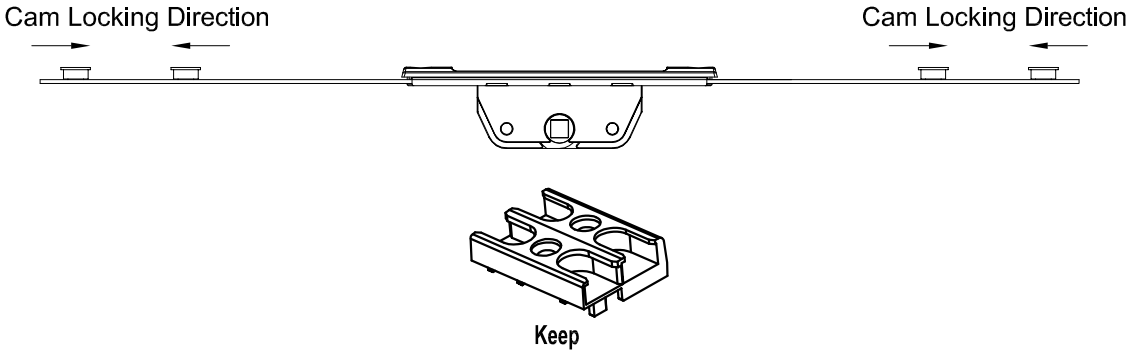

Note: Original locking hardware may still be used by using RV070 as the cill infill to support the keep.

Do Not Scale From This Drawing

Section C

Sections

Scale Elevations

Detail

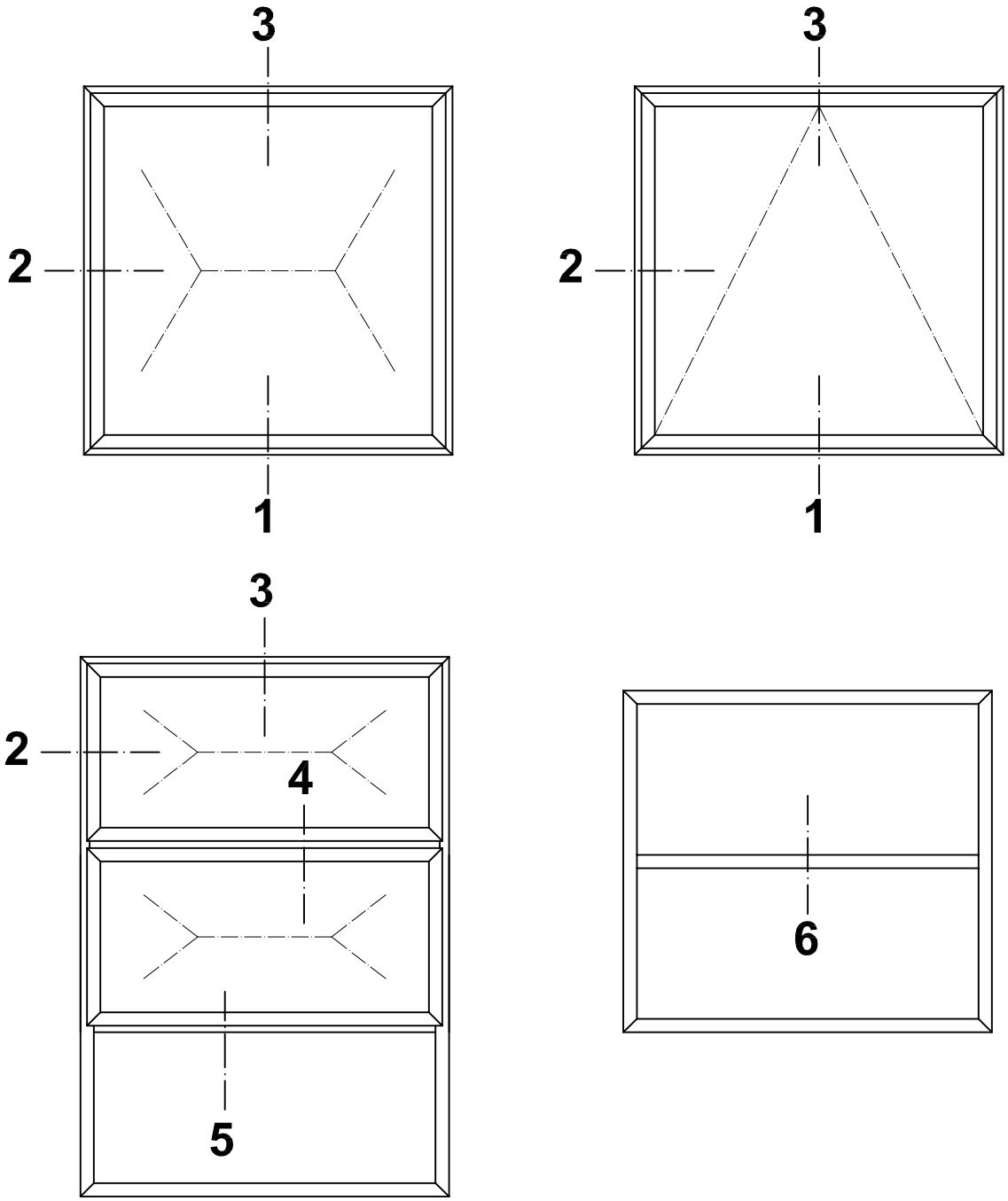

Do Not Scale From This Drawing

Detail 1A

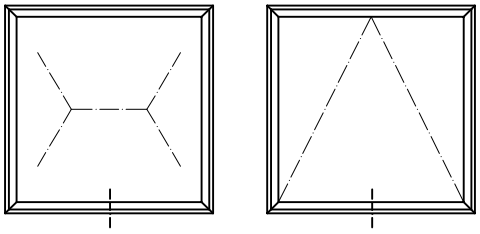

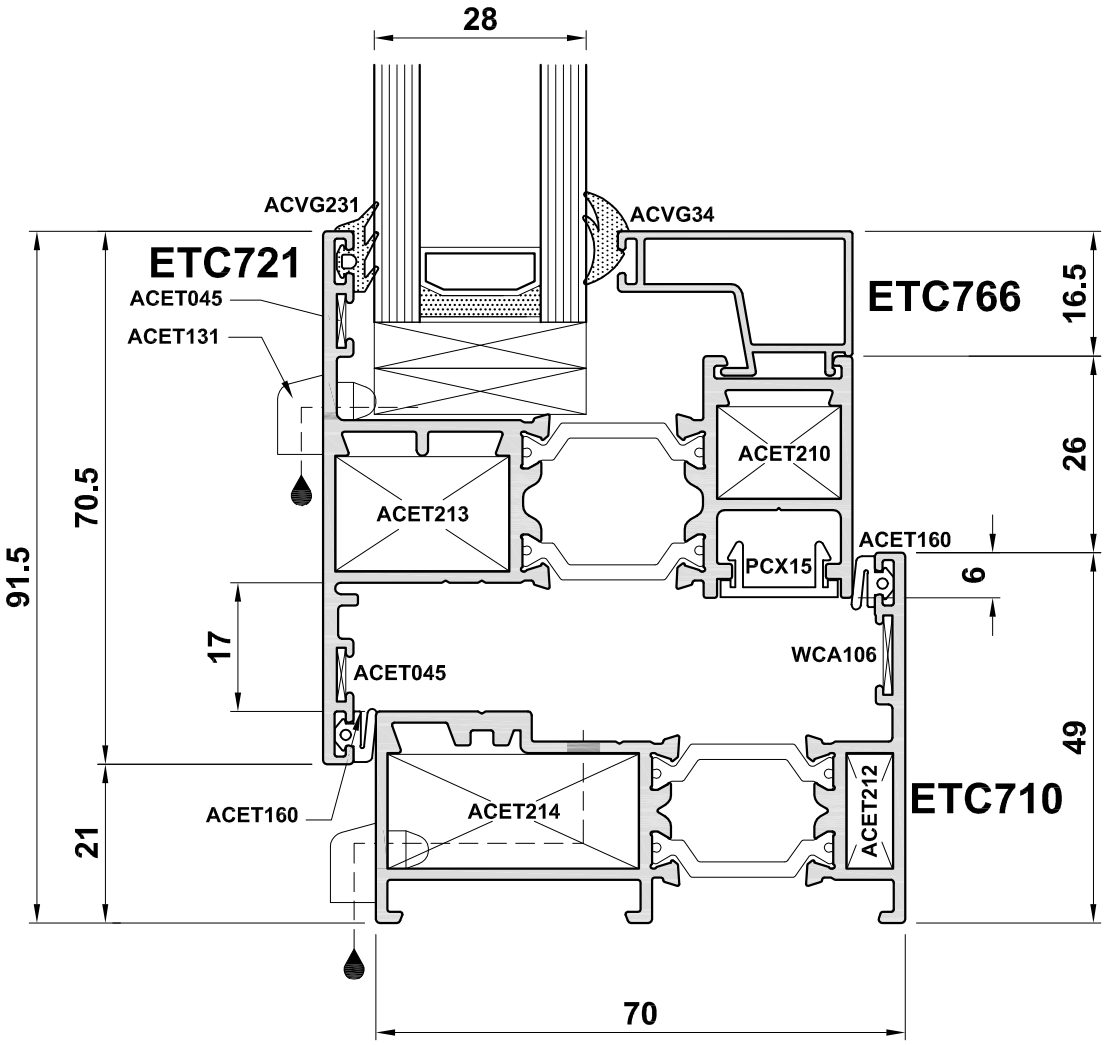

Do Not Scale From This Drawing

Detail 1B

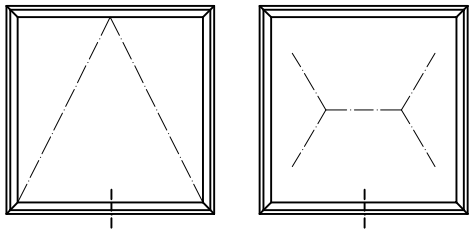

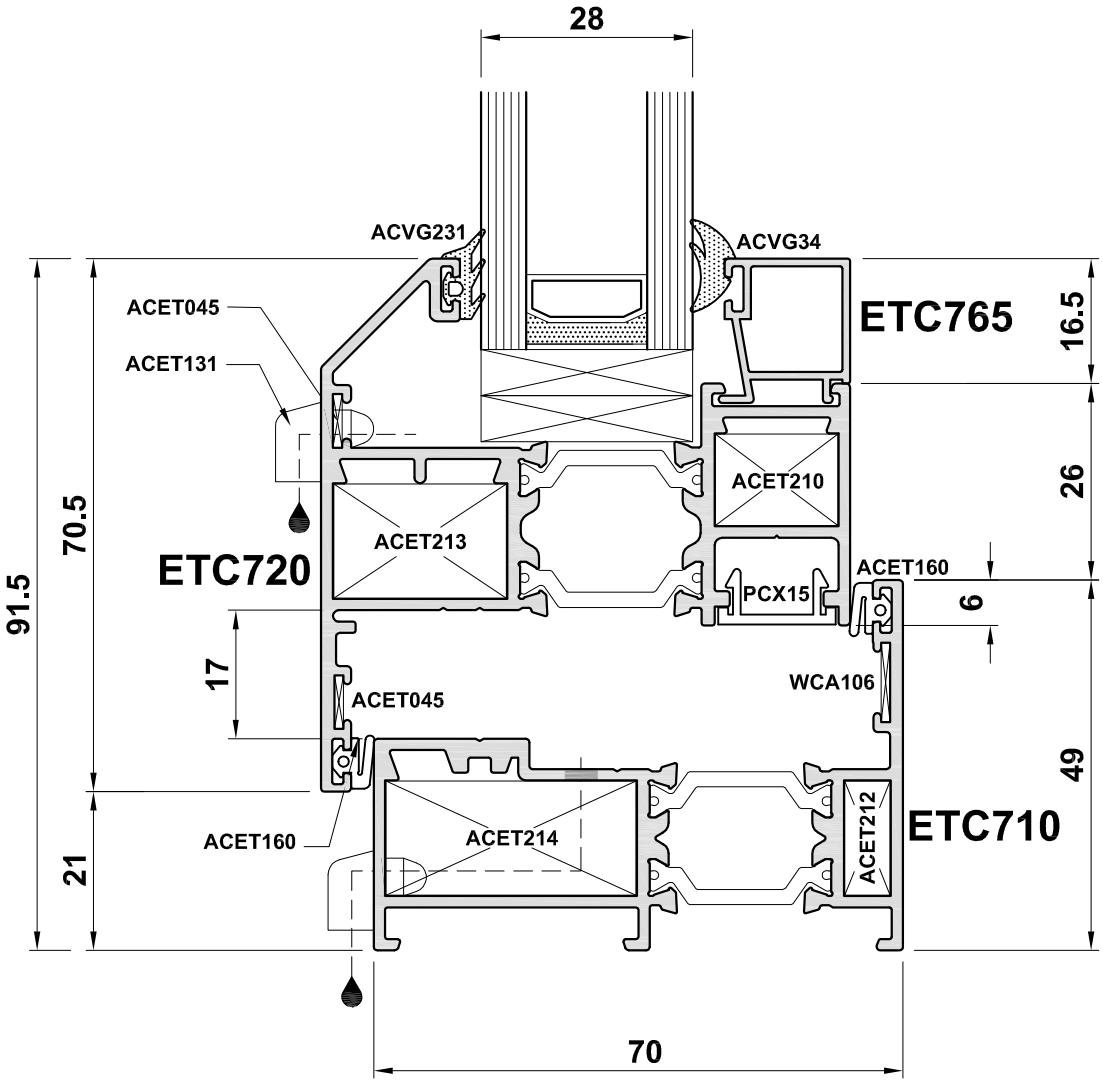

Do Not Scale From This Drawing

Detail 1C

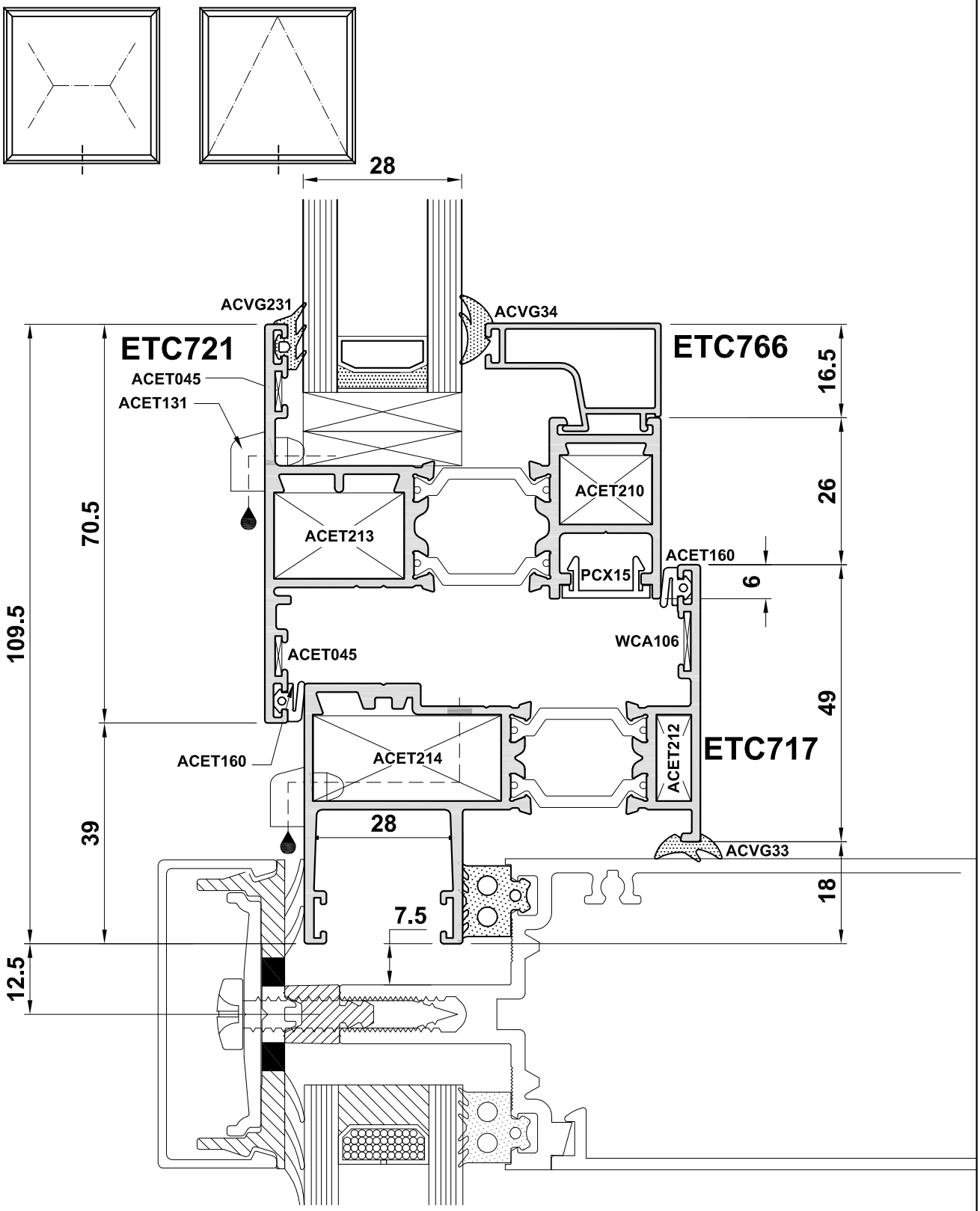

Do Not Scale From This Drawing

Detail 2A

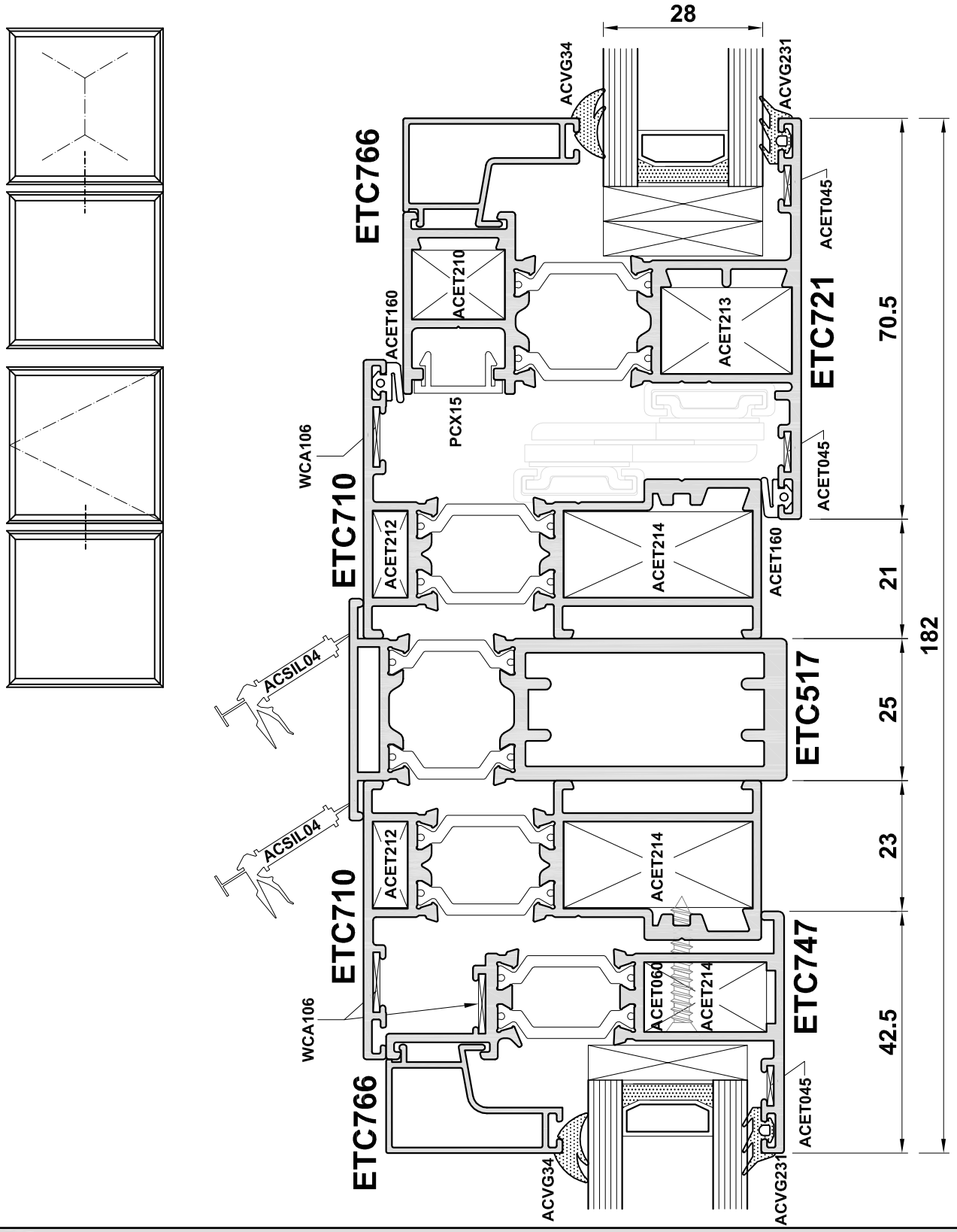

Do Not Scale From This Drawing

Detail 2B

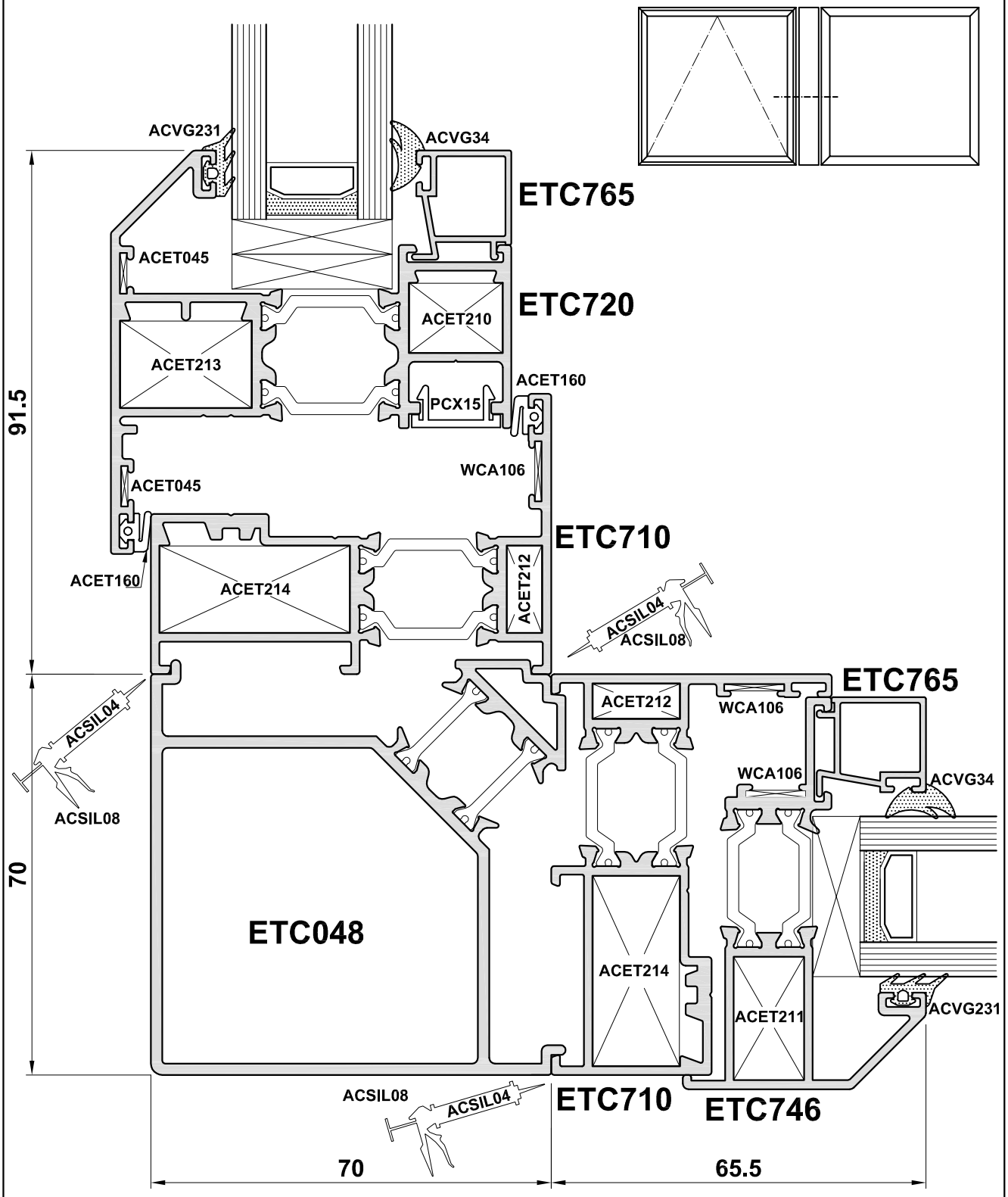

Do Not Scale From This Drawing

Detail 3A

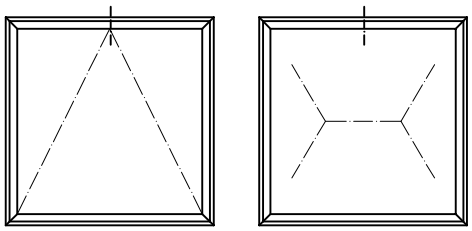

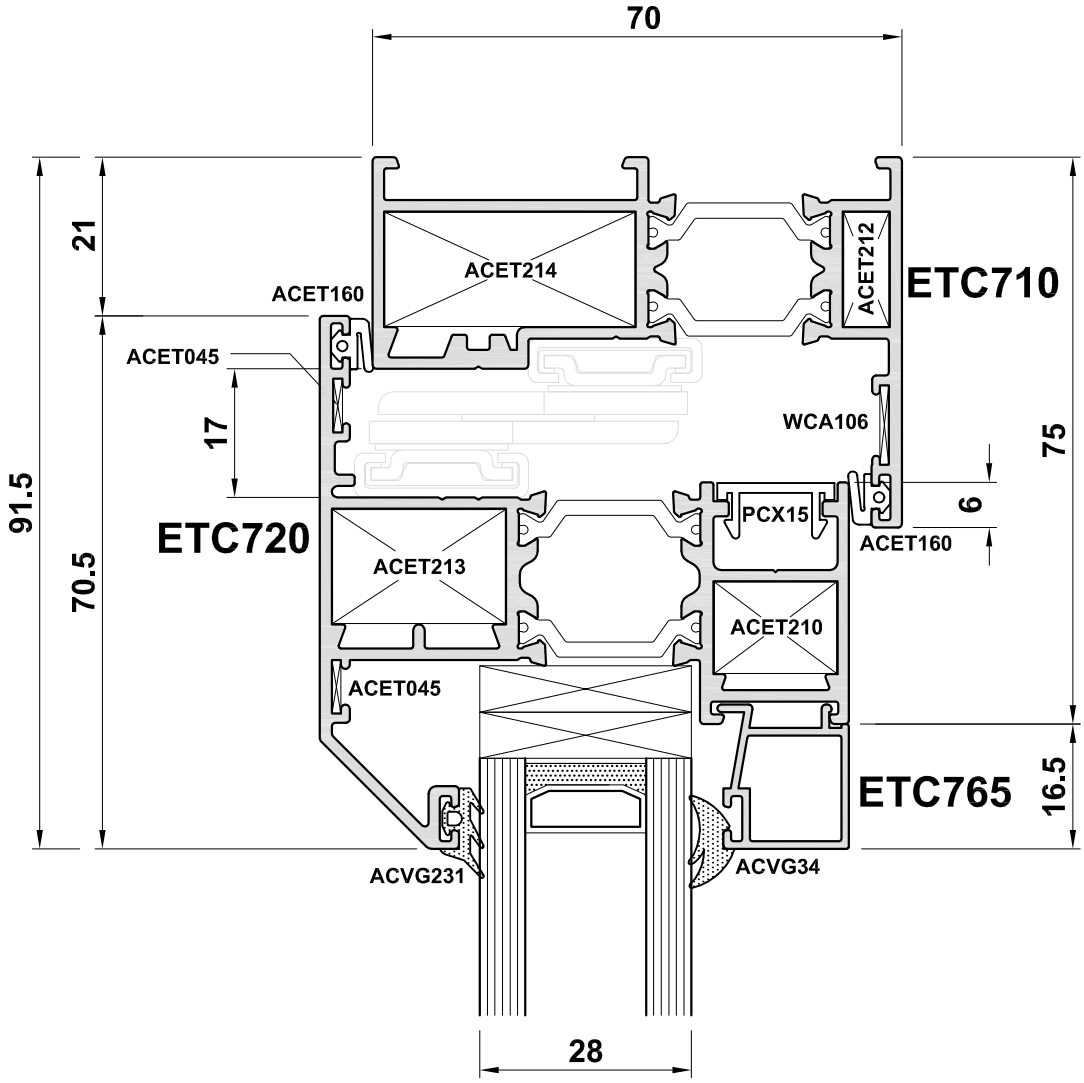

Do Not Scale From This Drawing

Detail 3B

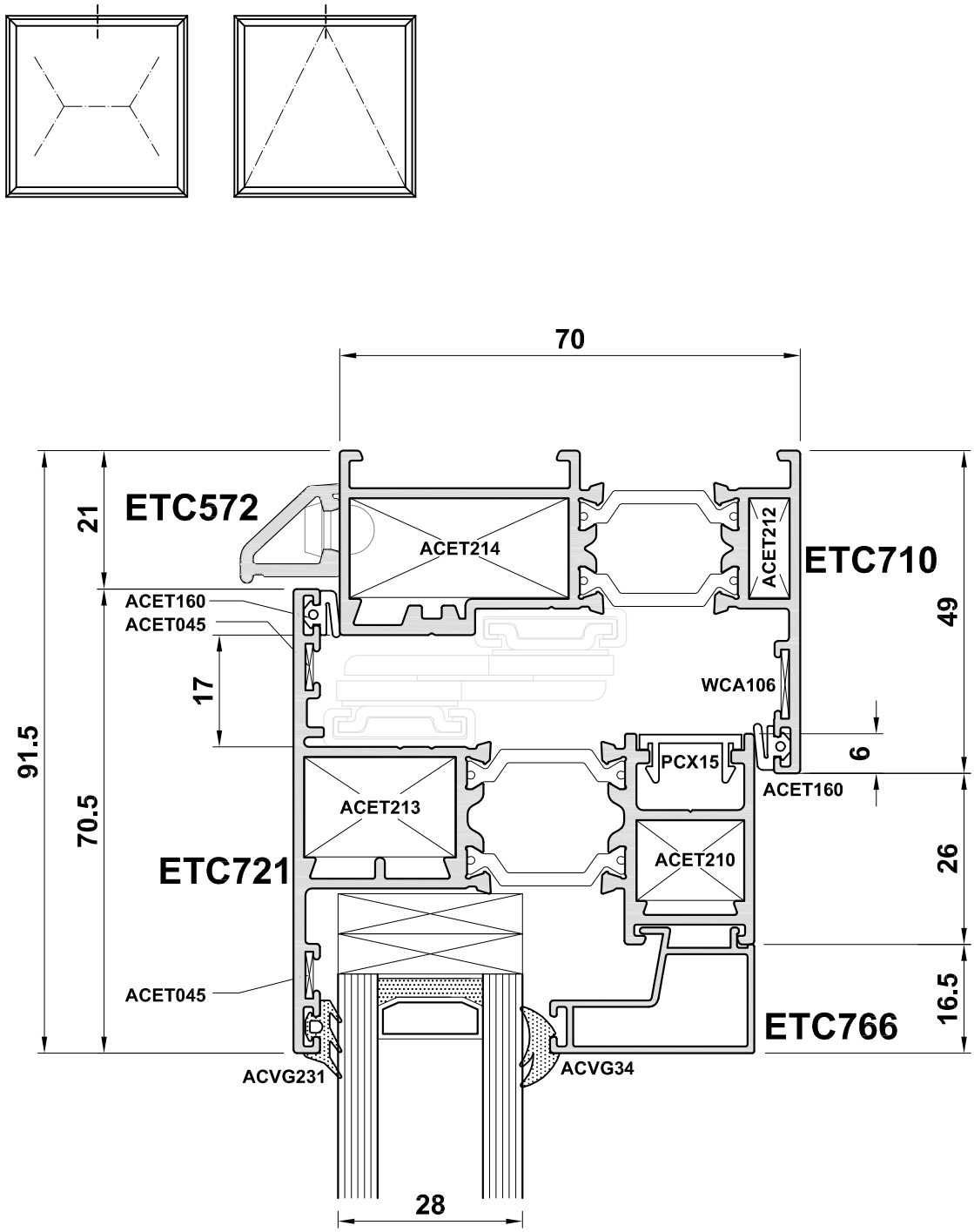

Do Not Scale From This Drawing

Detail 4A

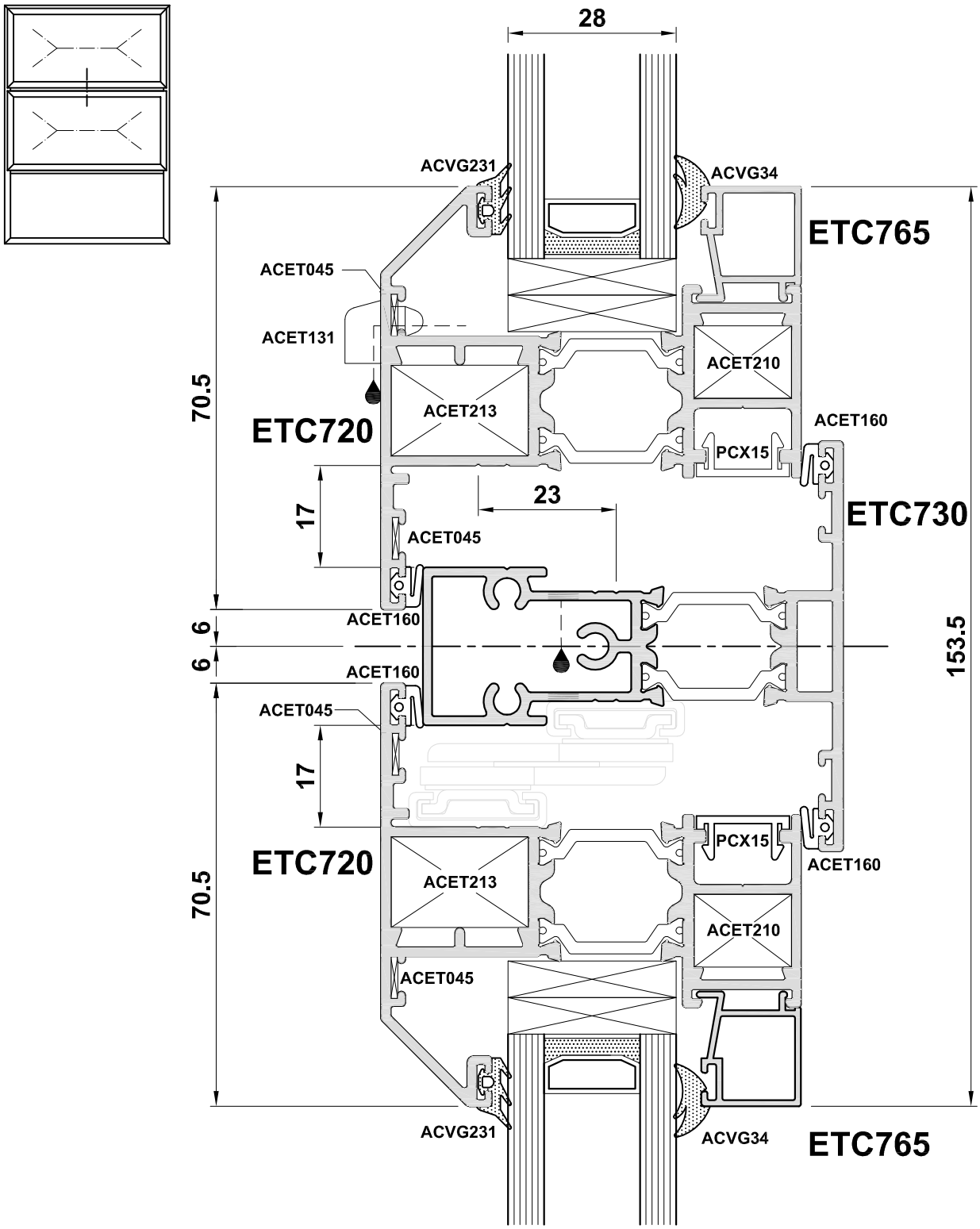

Note: Transoms will drain through the join to the outerframe.

Do Not Scale From This Drawing

Detail 4B

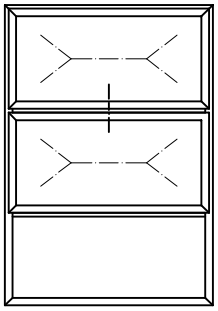

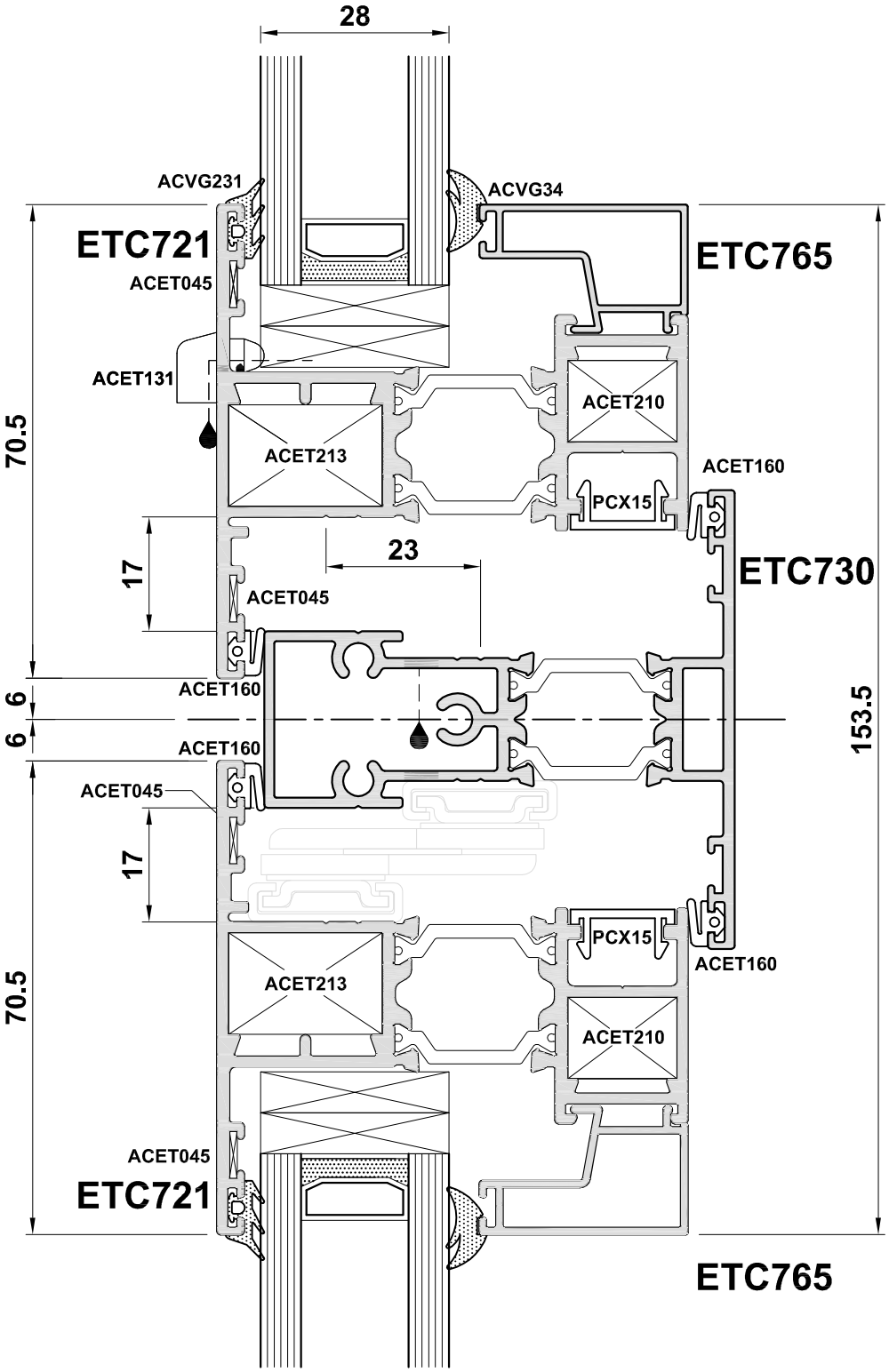

Note: Transoms will drain through the join to the outerframe.

Do Not Scale From This Drawing

Detail 5A

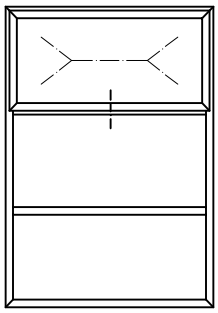

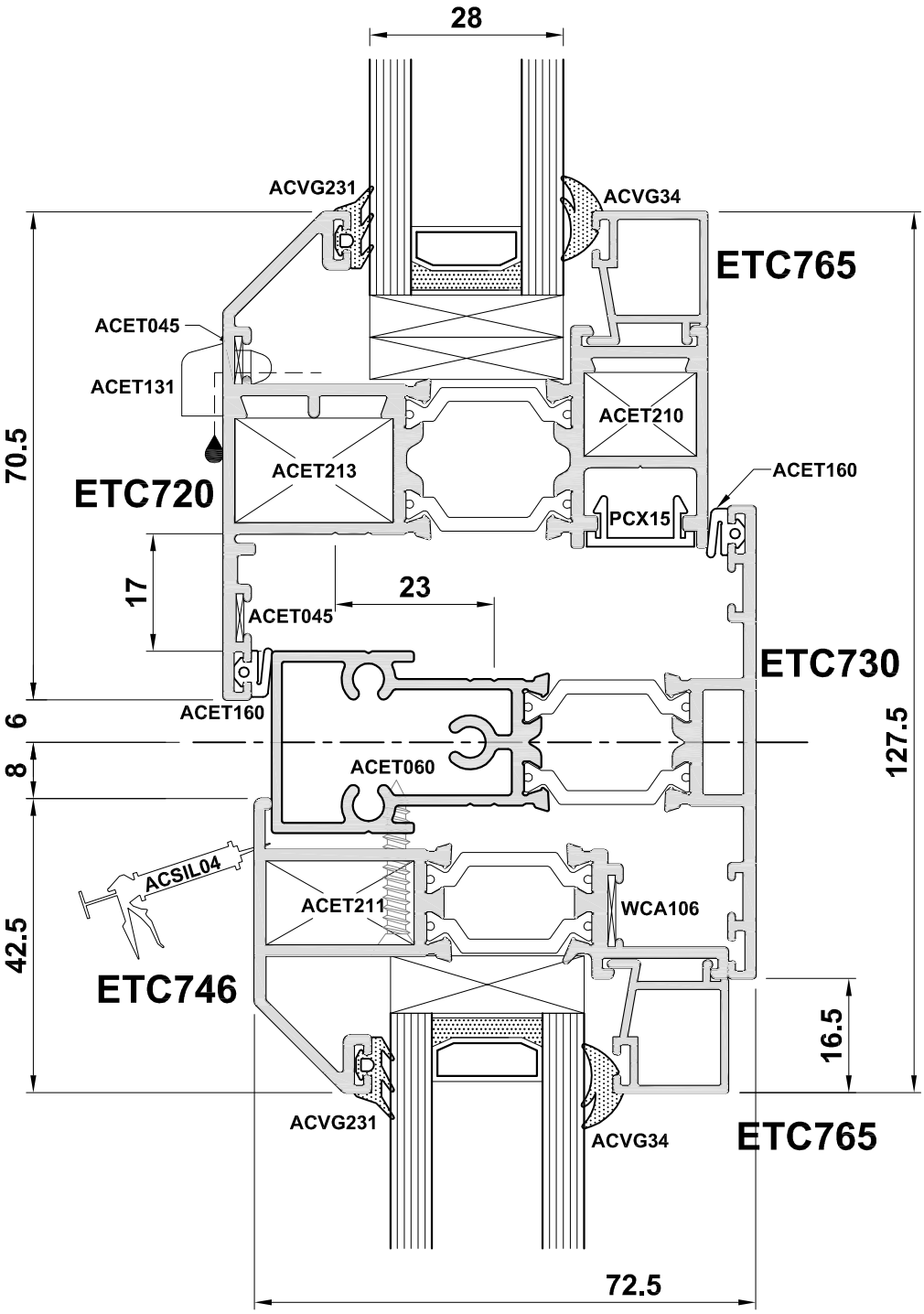

Note: Transoms will drain through the join to the outerframe.

Do Not Scale From This Drawing

Detail 5B

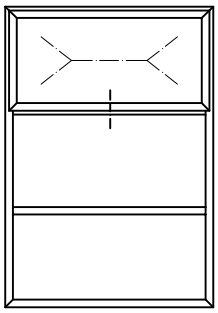

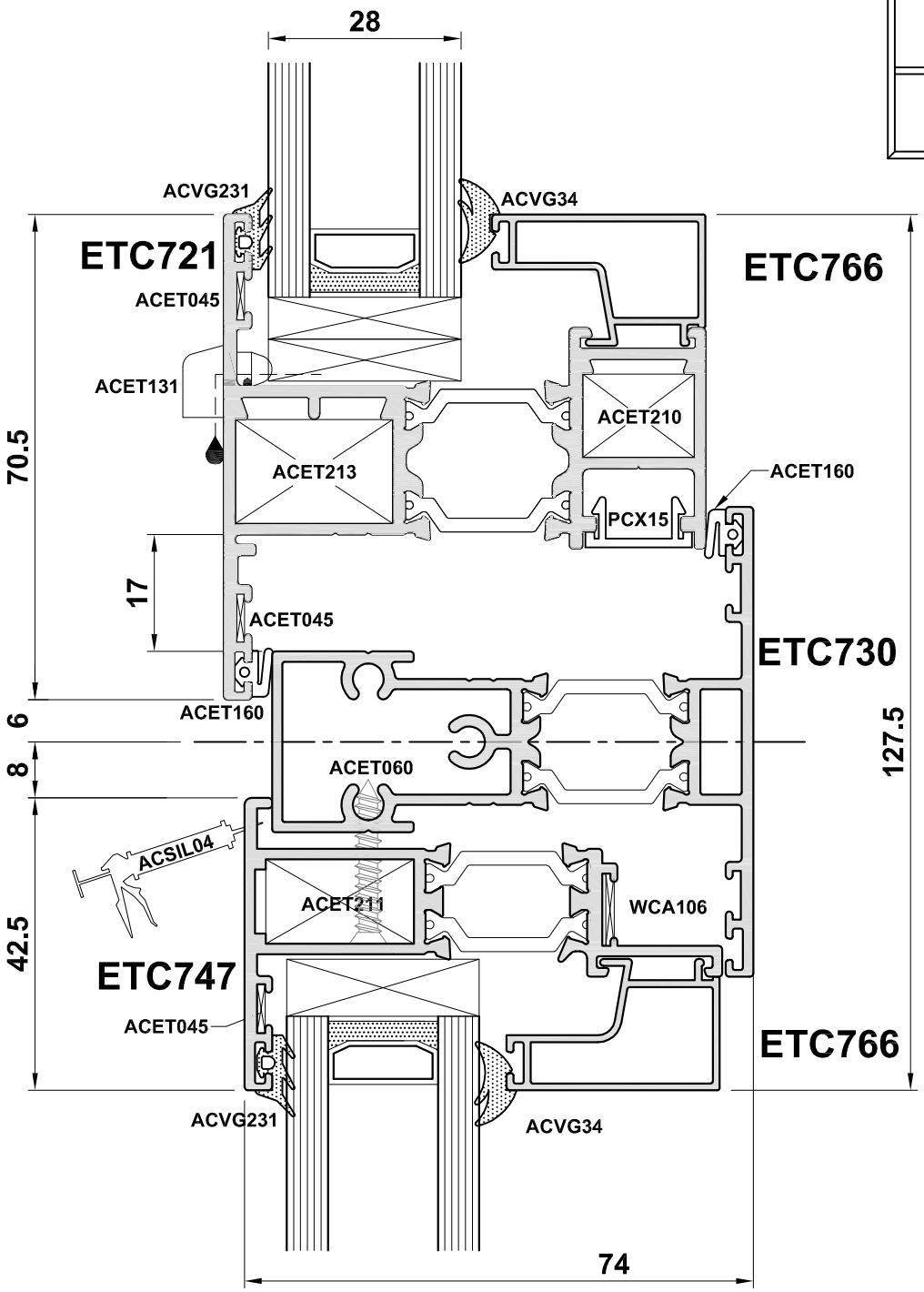

Note: Transoms will drain through the join to the outerframe.

Do Not Scale From This Drawing

Detail 6A

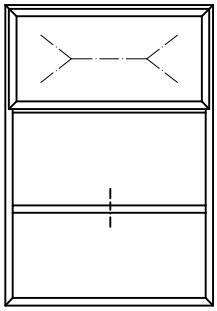

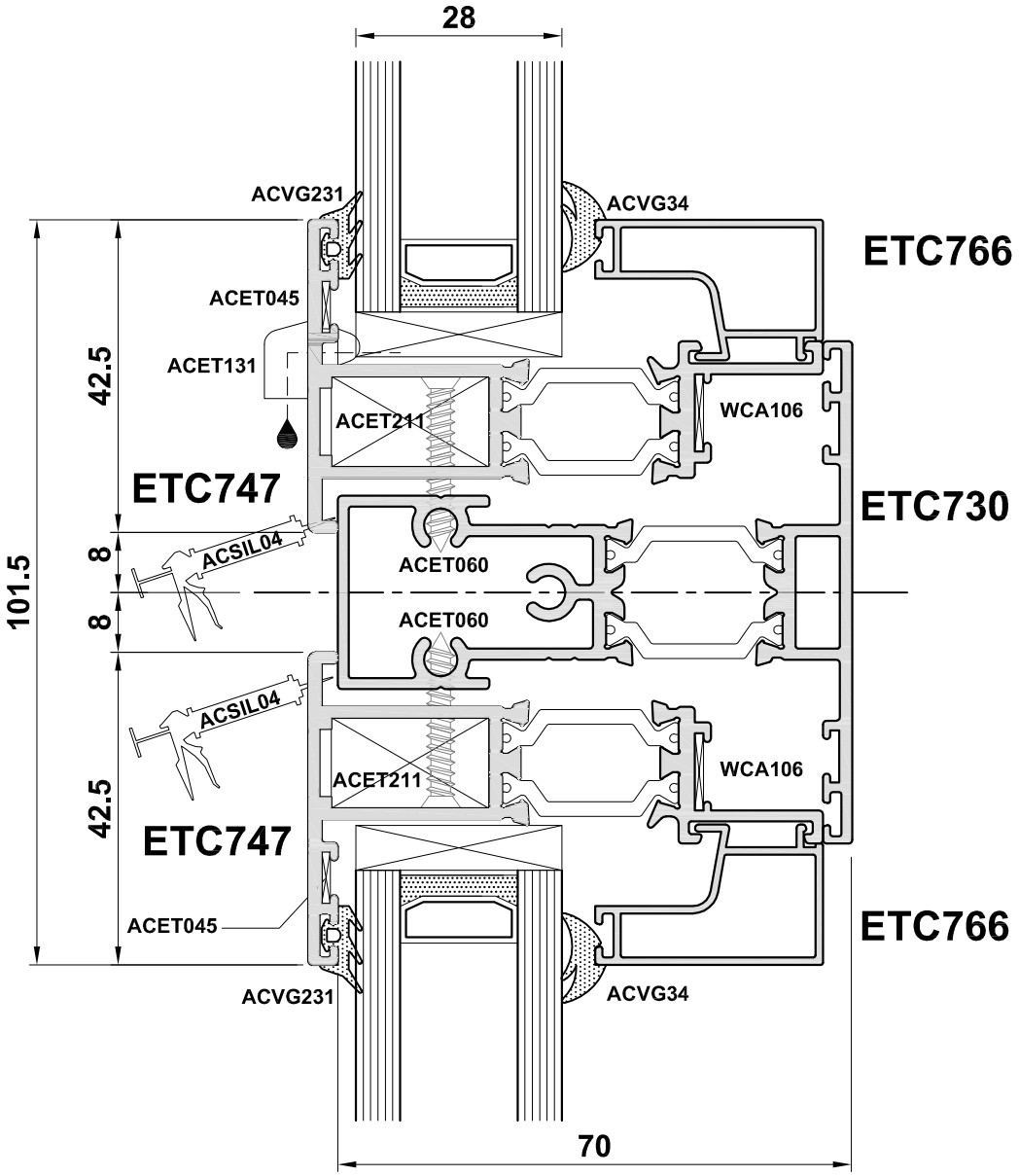

Note: Transoms will drain through the join to the outerframe.

Do Not Scale From This Drawing

Detail 6B

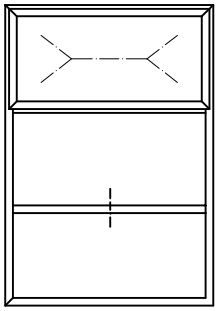

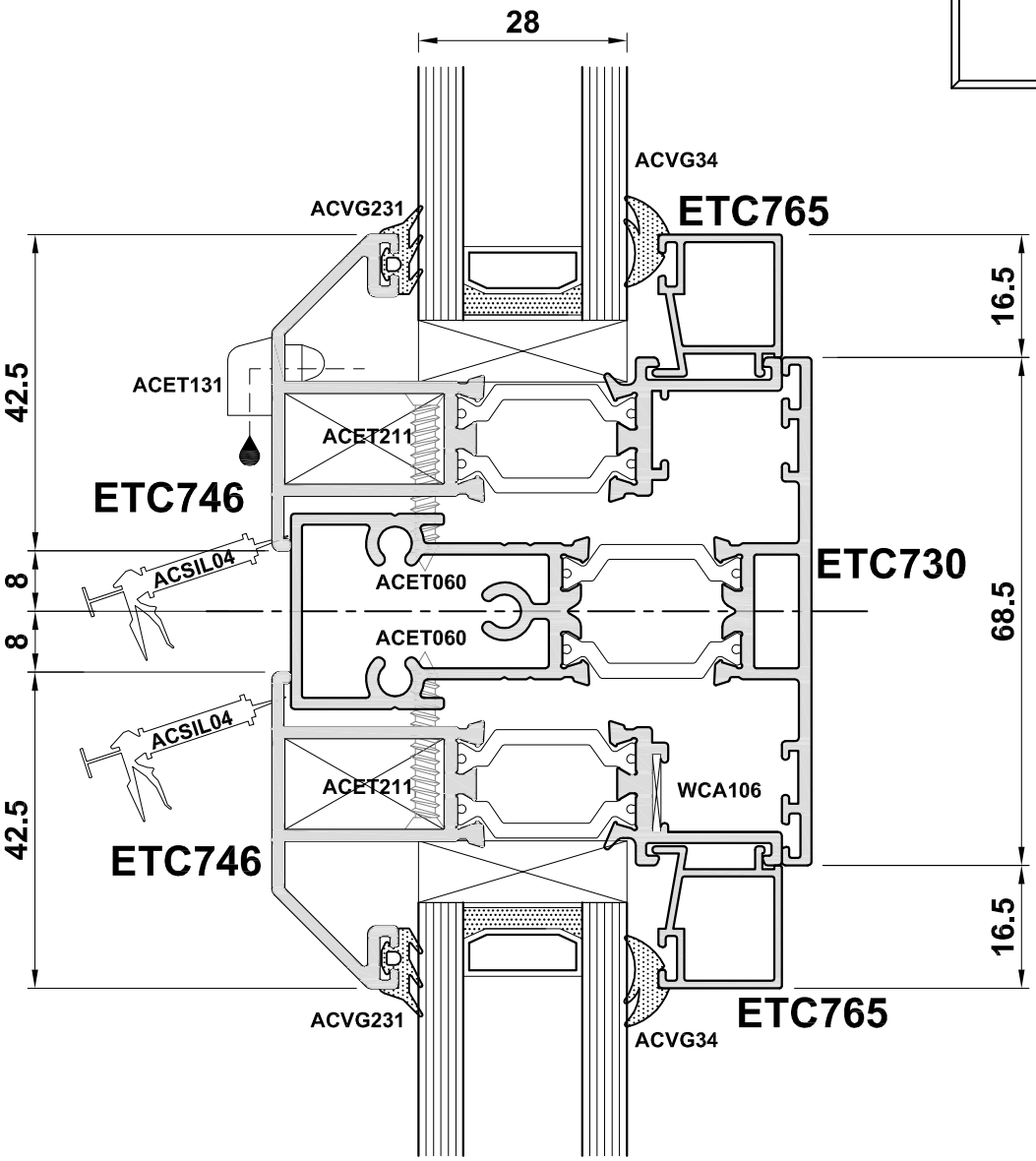

Note: Transoms will drain through the join to the outerframe.

Do Not Scale From This Drawing

Detail 6C

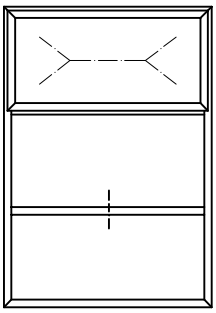

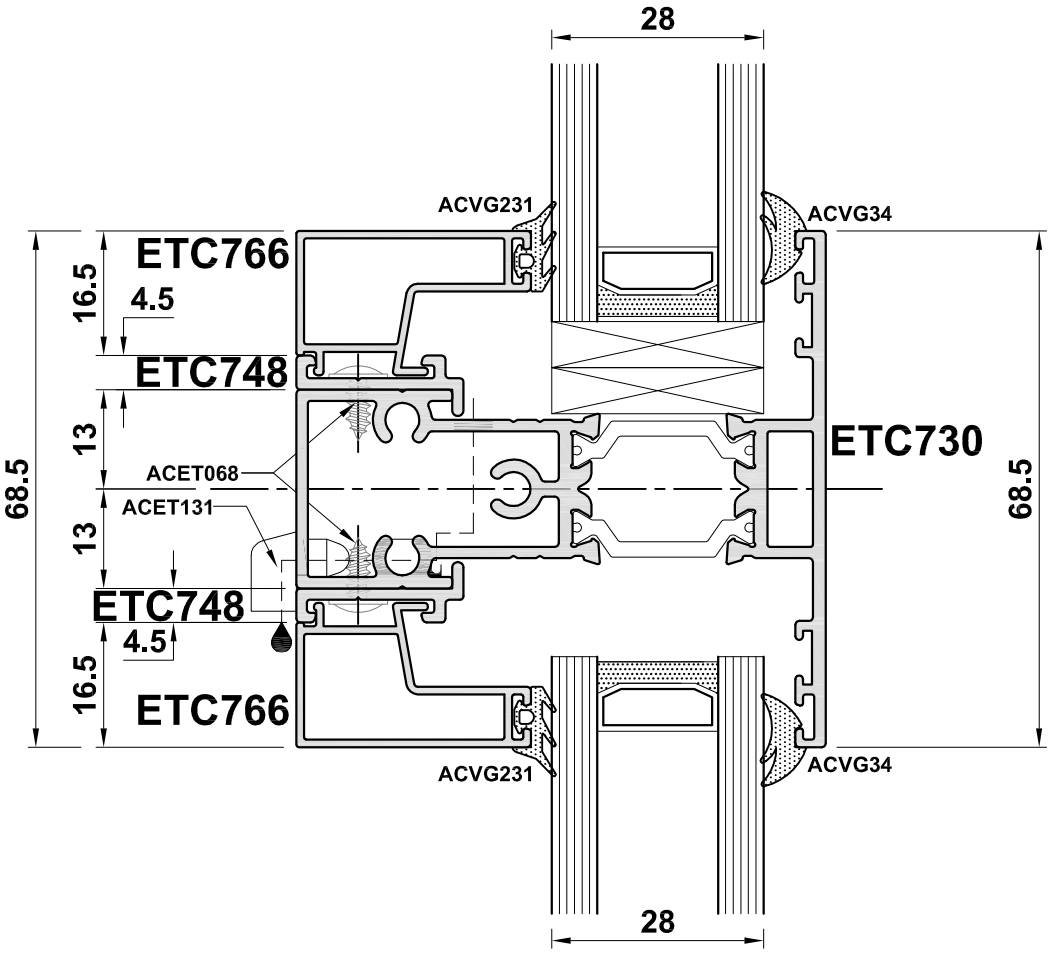

Note: Transoms will drain through the join to the outerframe.

Do Not Scale From This Drawing

Reversible

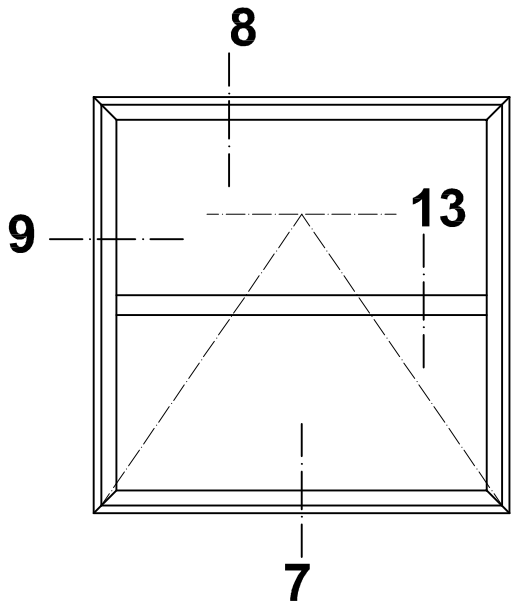

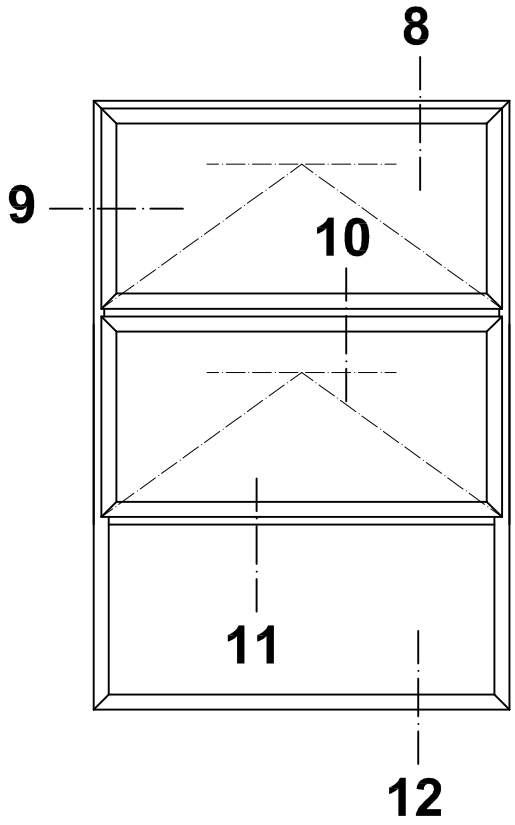

Do Not Scale From This Drawing

Detail 7A

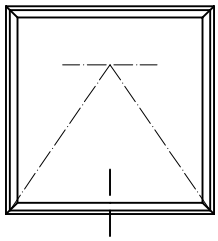

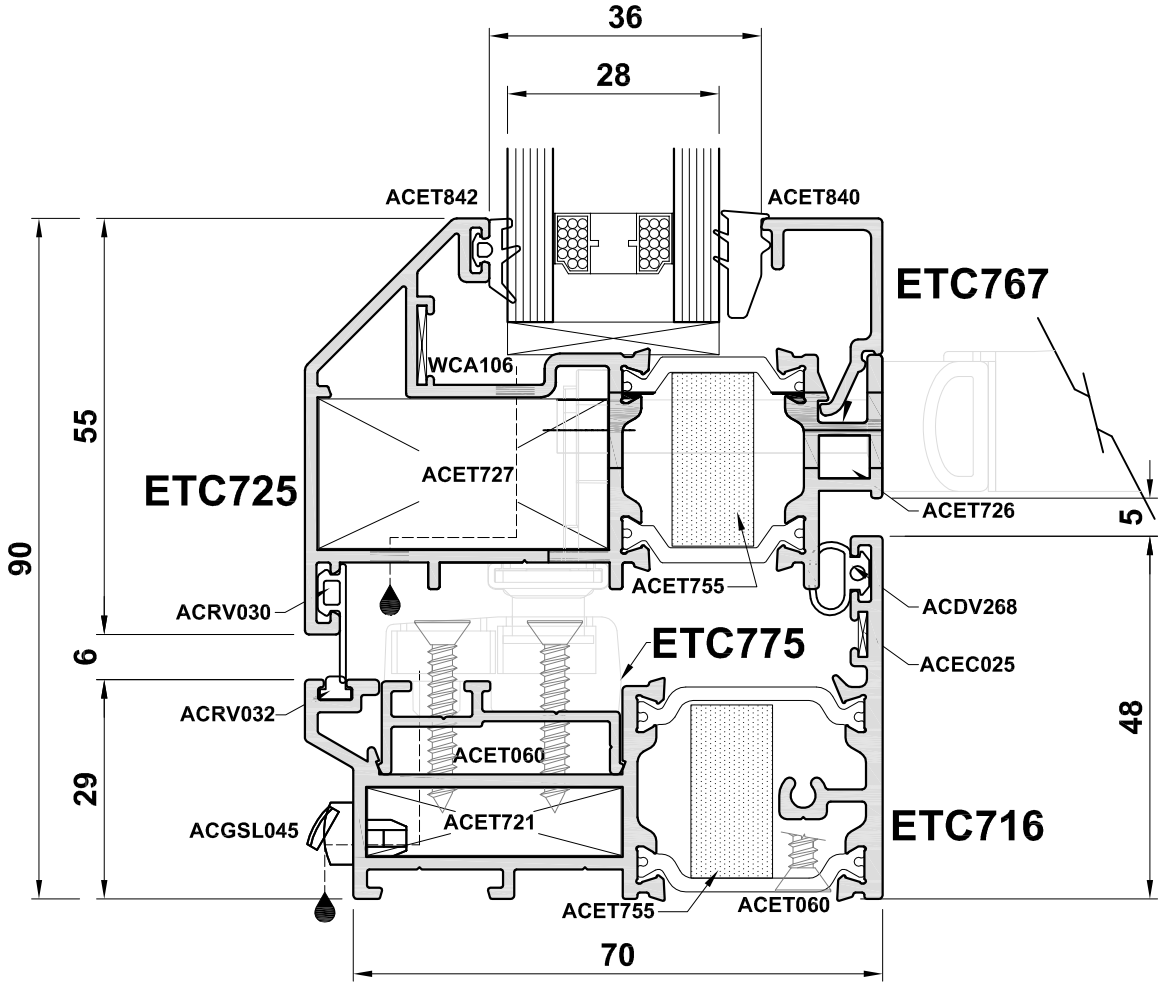

Do Not Scale From This Drawing

Detail 7B

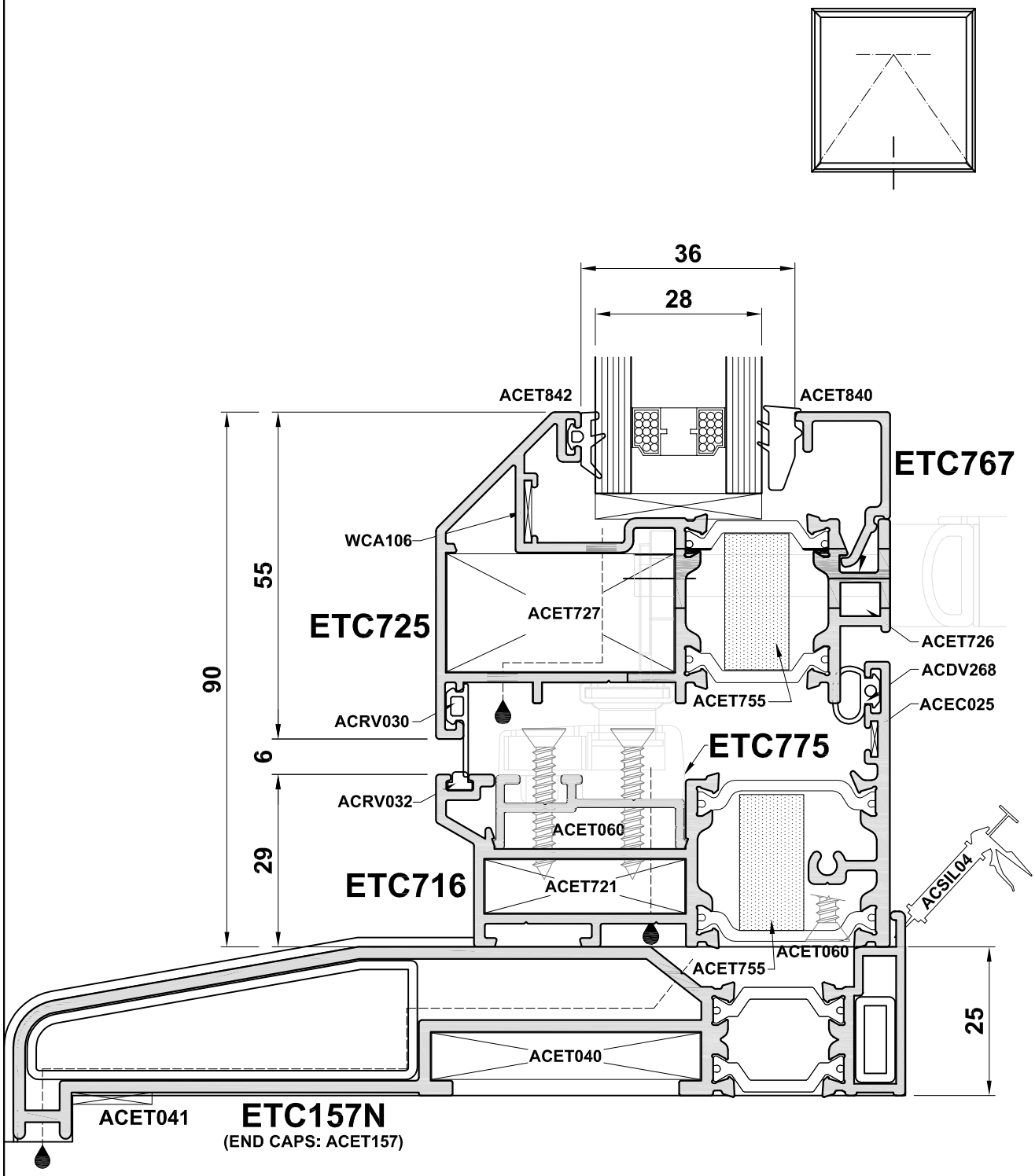

Do Not Scale From This Drawing

Detail 7C

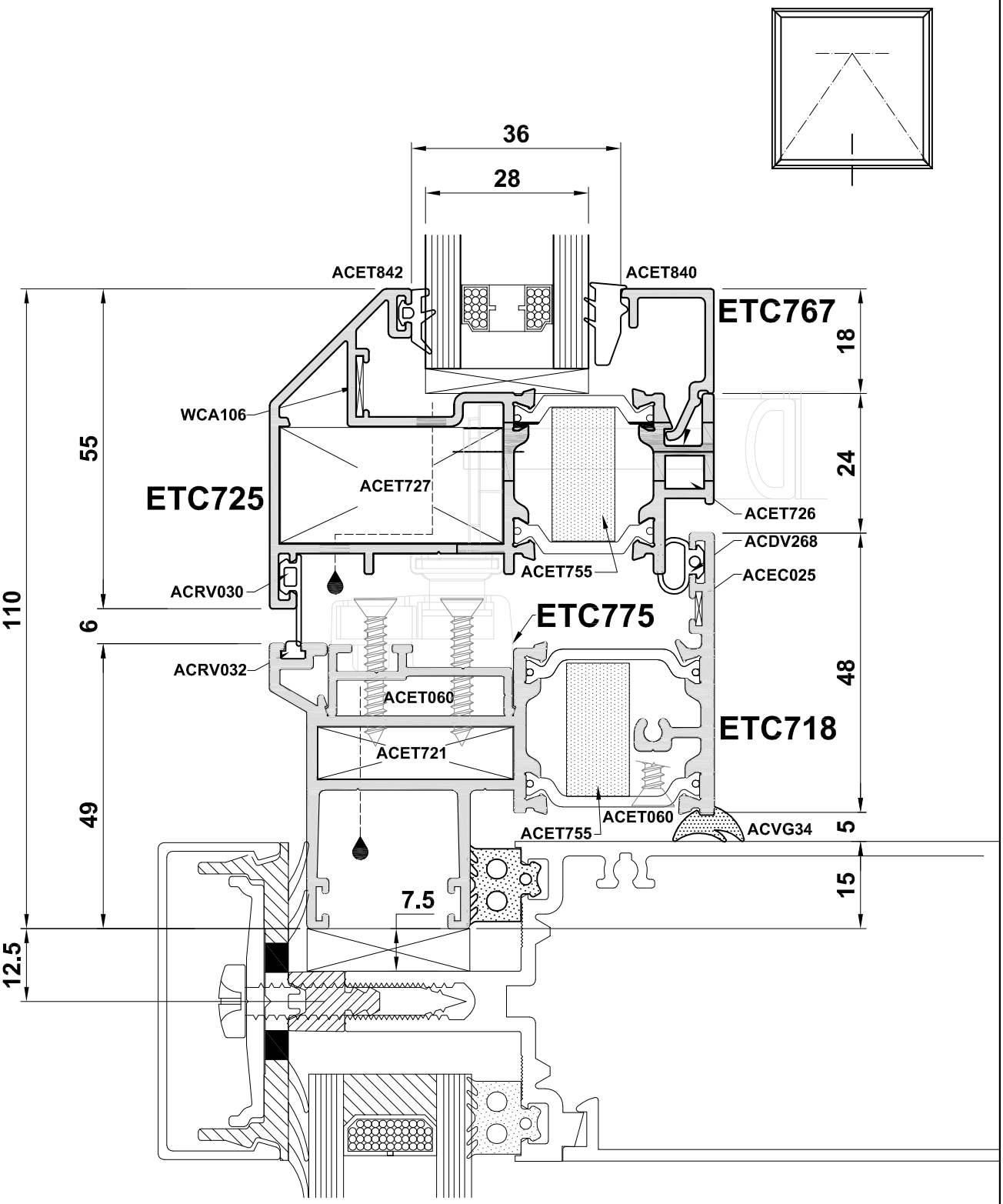

Do Not Scale From This Drawing

Detail 8A

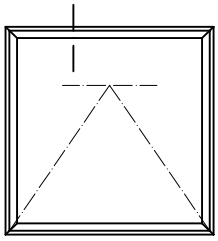

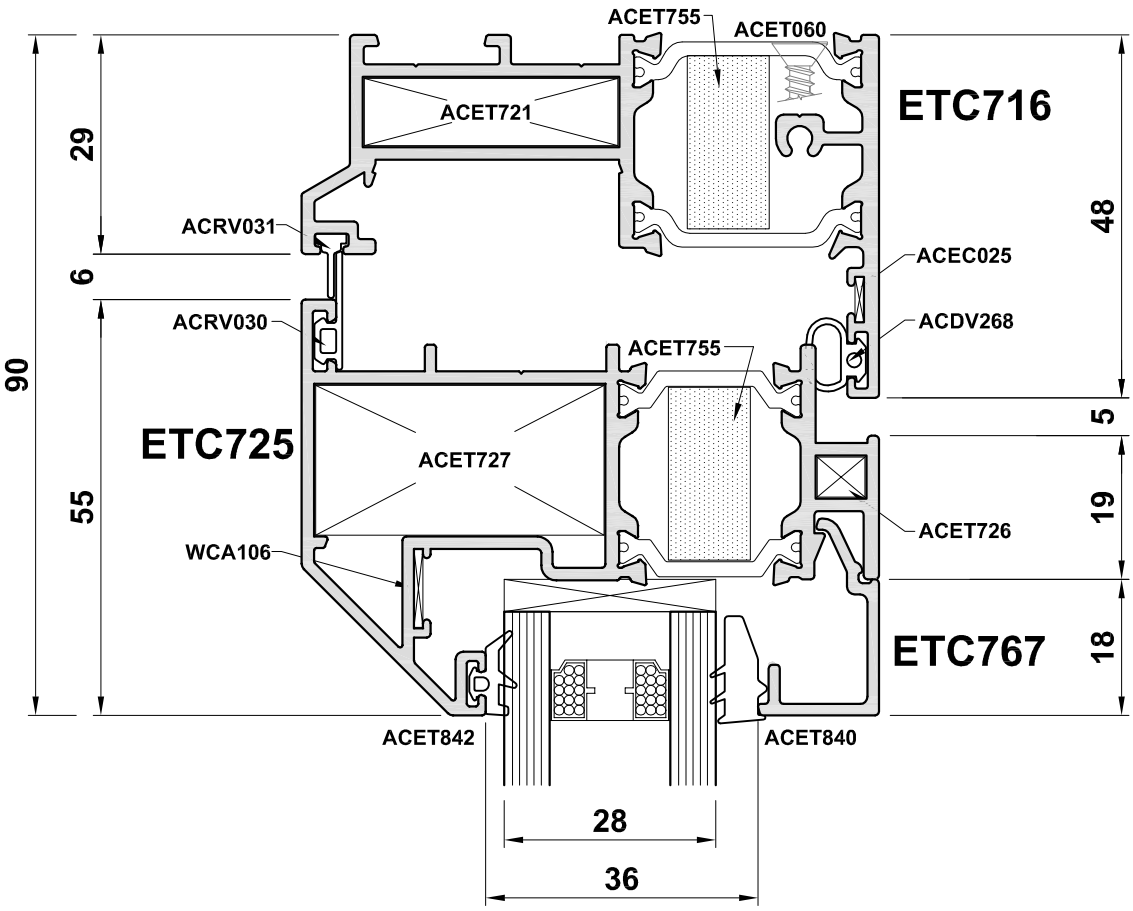

Do Not Scale From This Drawing

Detail 8B

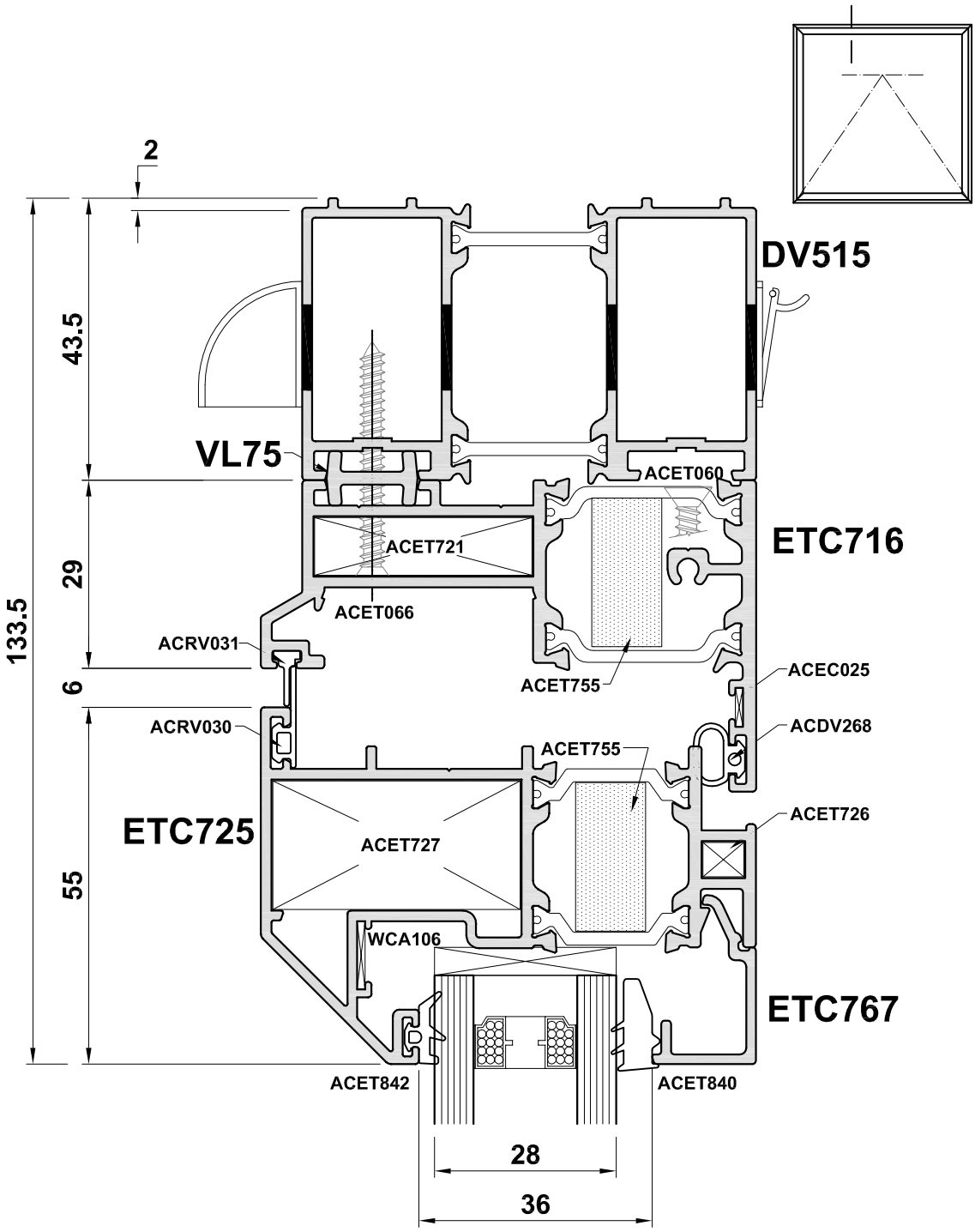

Do Not Scale From This Drawing

Detail 9

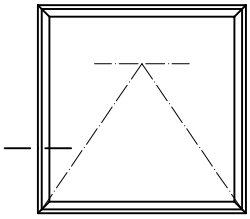

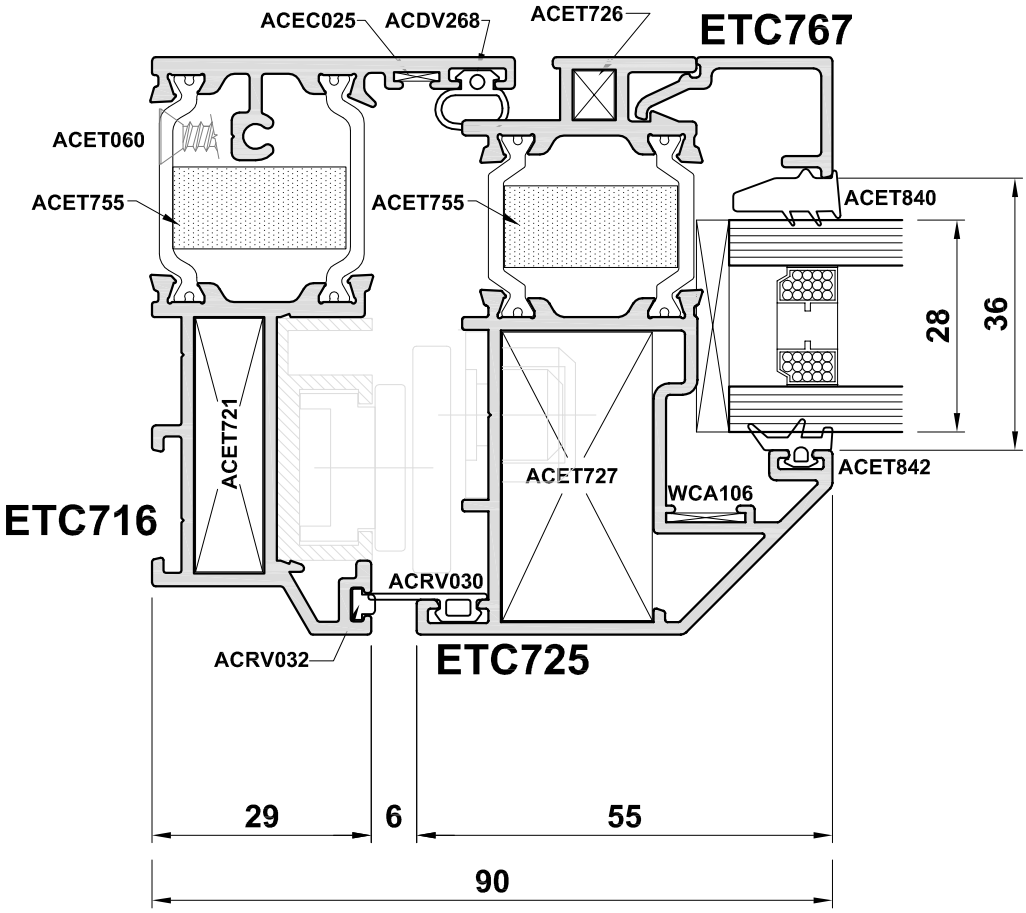

Do Not Scale From This Drawing

Detail 10

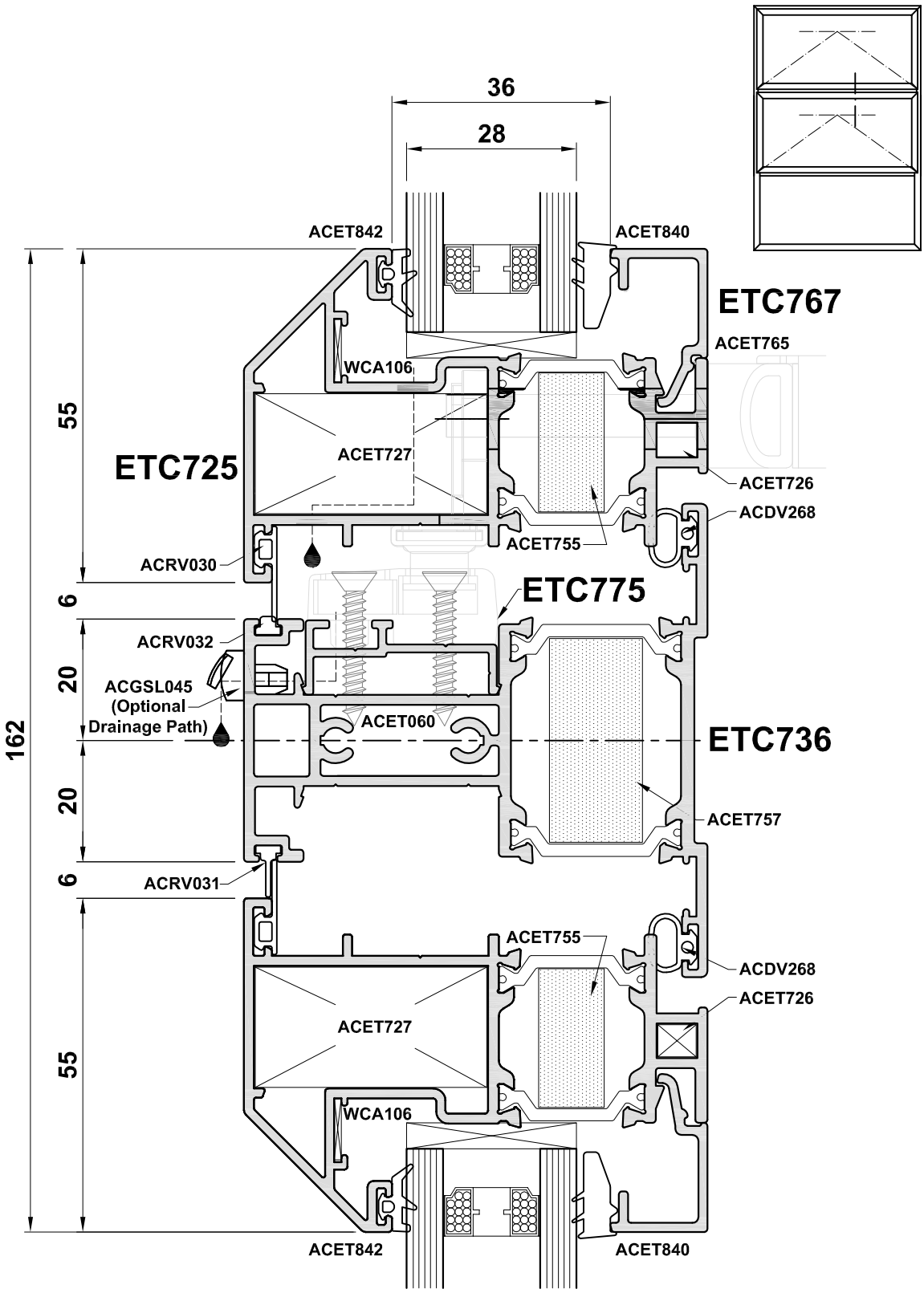

Do Not Scale From This Drawing

Detail 11

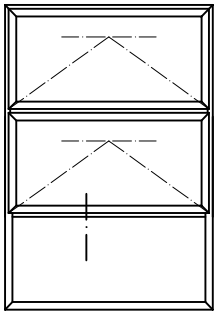

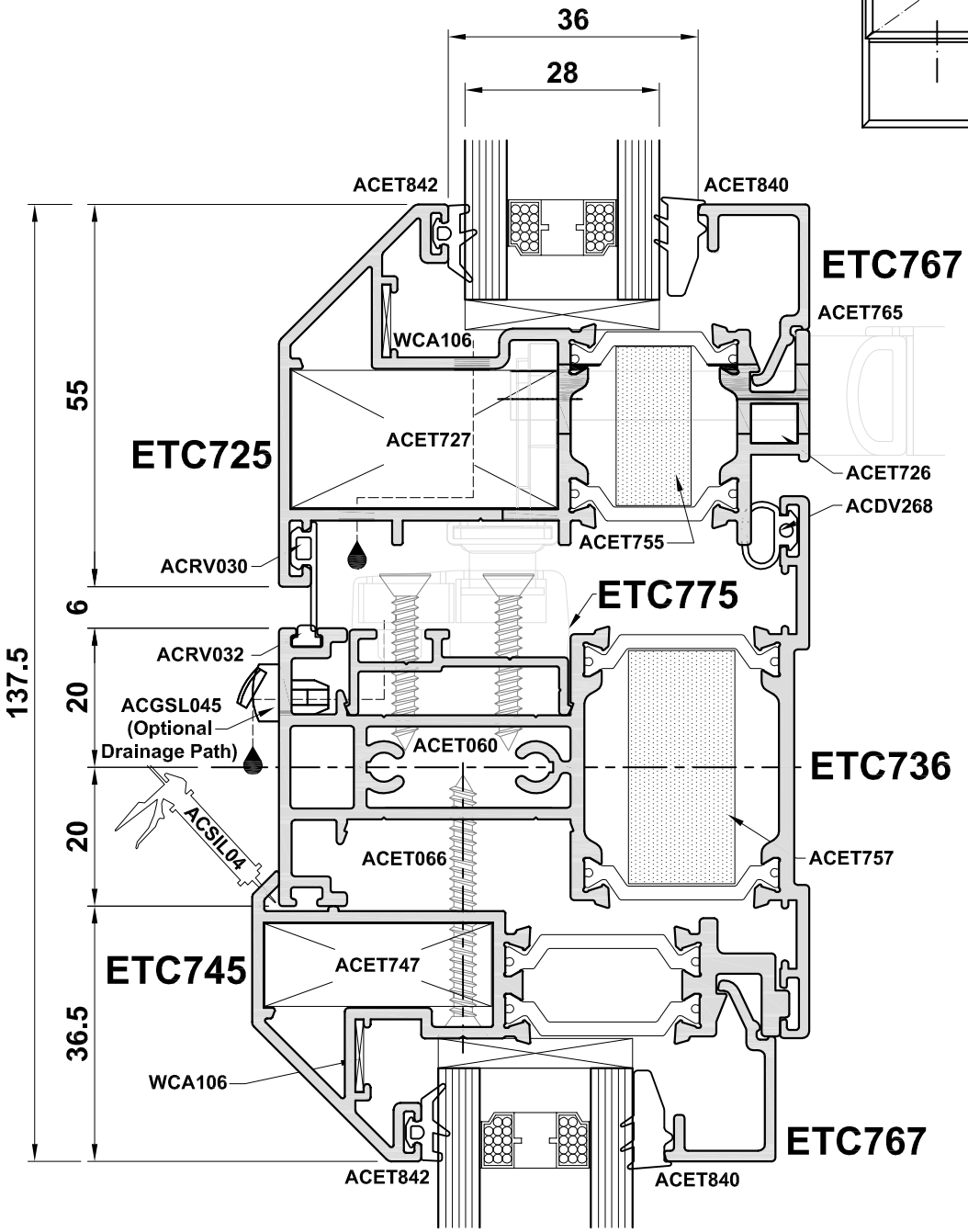

Do Not Scale From This Drawing

Detail 12A

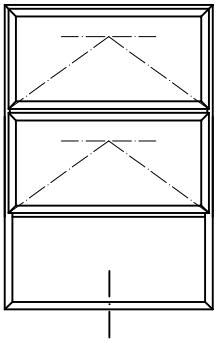

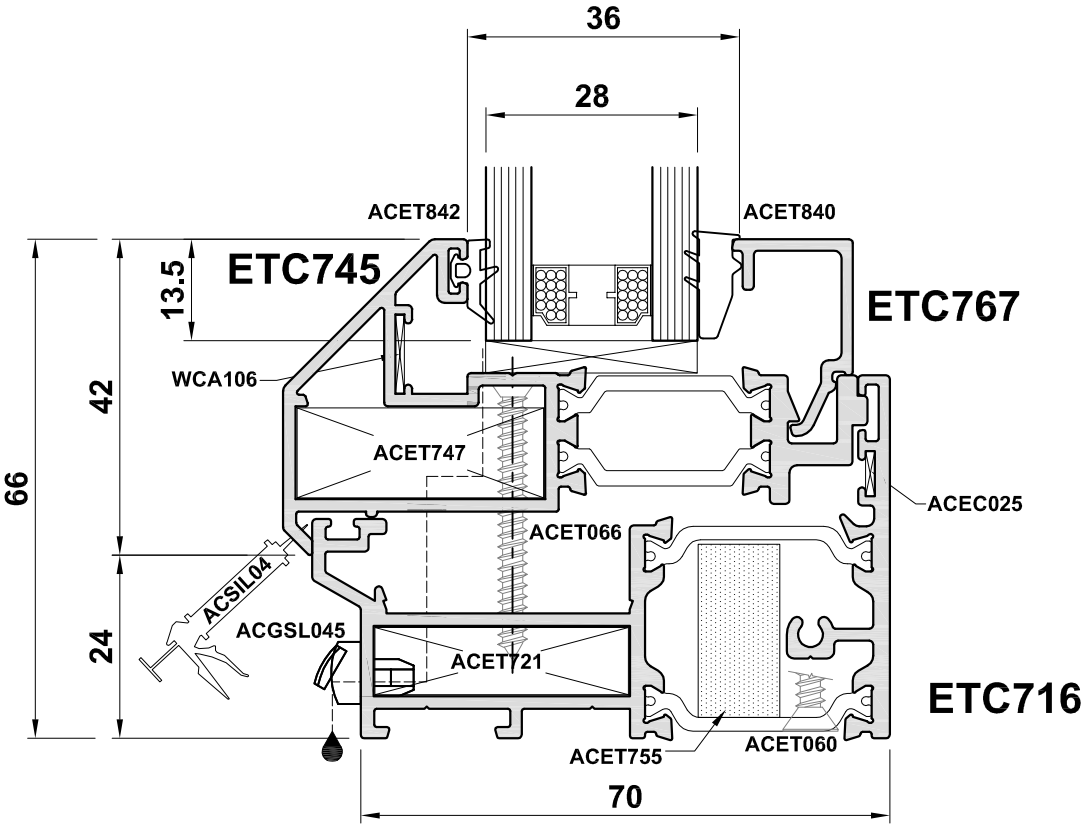

Do Not Scale From This Drawing

Detail 12B

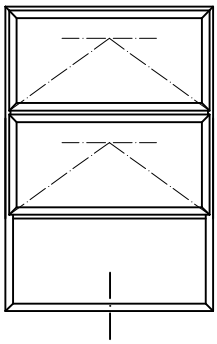

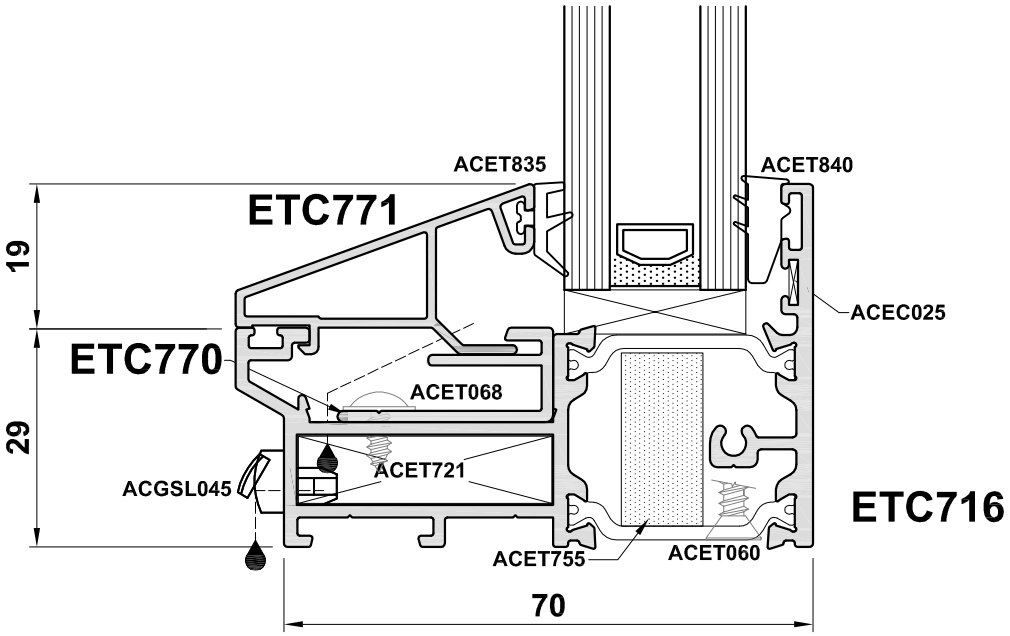

Do Not Scale From This Drawing

Detail 13

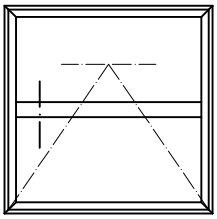

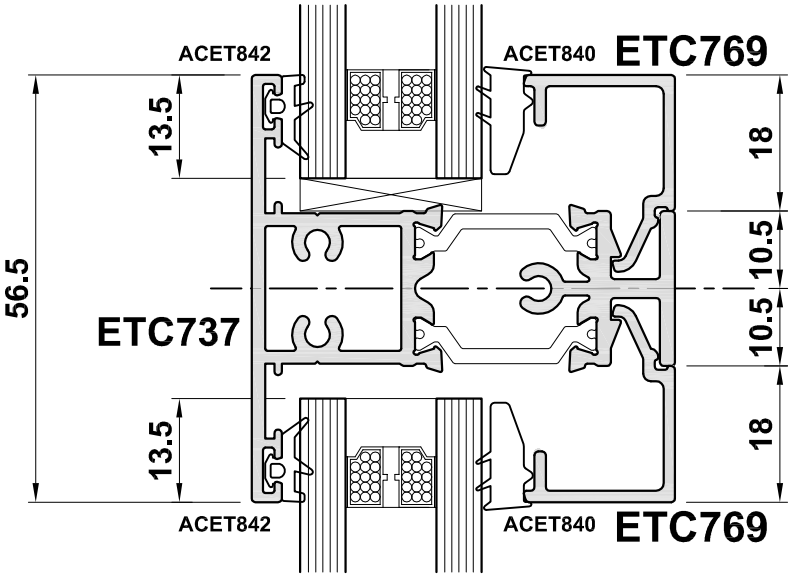

Do Not Scale From This Drawing

Section D

Statics

General Size Limitations are shown on Page A03.

For Wind Loading Limitations, Please Contact The Technical Department - T: 01934 876100

Section E

Parallel & Casement Construction Drawings

Corner Jointing ..... Page E03-E04
Transom/Mullion Fixings..... Page E05
Reverse Adaptor..... Page E06
Drainage..... ..... Page E07
Locking Hardware - System Parameters ..... Page E08-E09
Hinges - System Parameters ..... Page E10-13
Bead & Glazing ..... Page E14
Fixing Straps..... Page E26

Reversible Construction Drawings

Corner Jointing ..... Page E15
Transom/Mullion Fixings ..... Page E16
Drainage..... Page E17
Reversible Hinge Details..... Page E18-E20
Locking Hardware - System Parameters ..... Page E21-E23
Bead & Glazing ..... Page E24-E25
Fixing Straps..... Page E26

Typical Corner Assembly

Parallel & Casement Window

Manual Crimper: WUT024HSZA

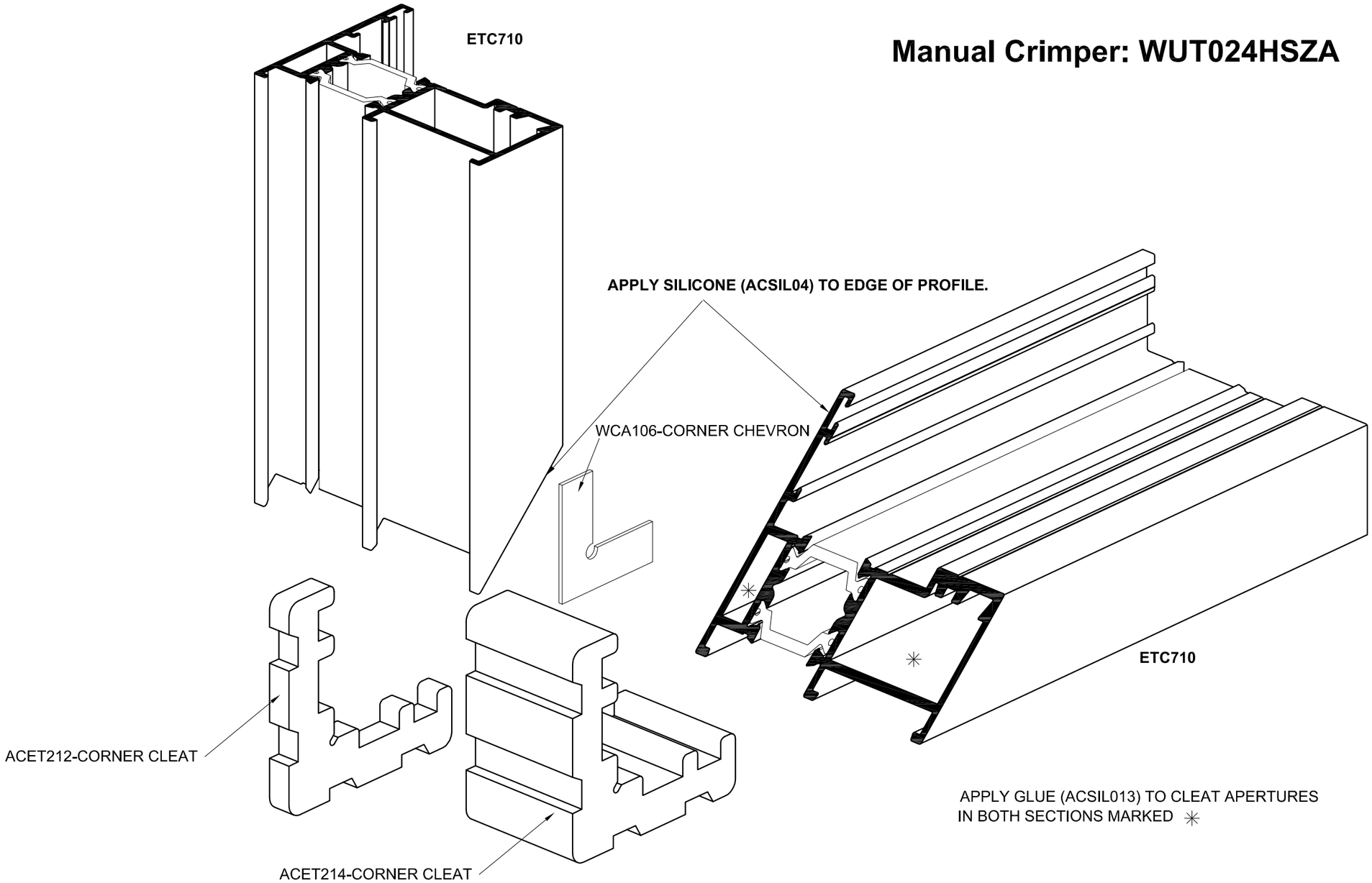

Do Not Scale From This Drawing

Crimping Details

Parallel & Casement Window

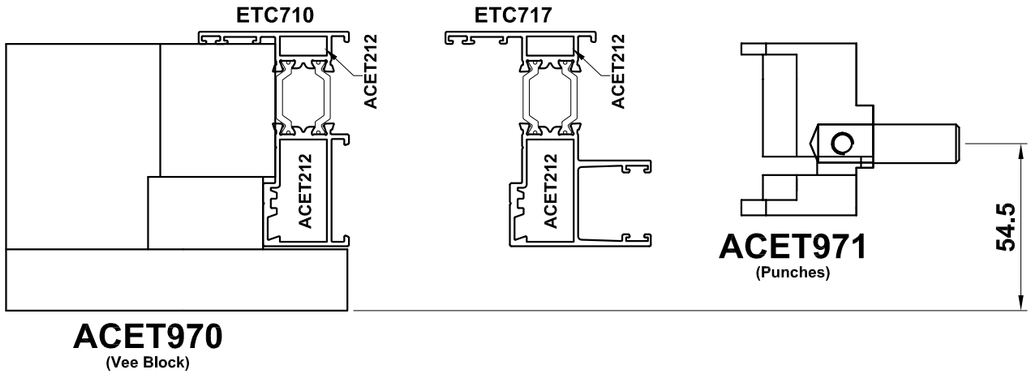

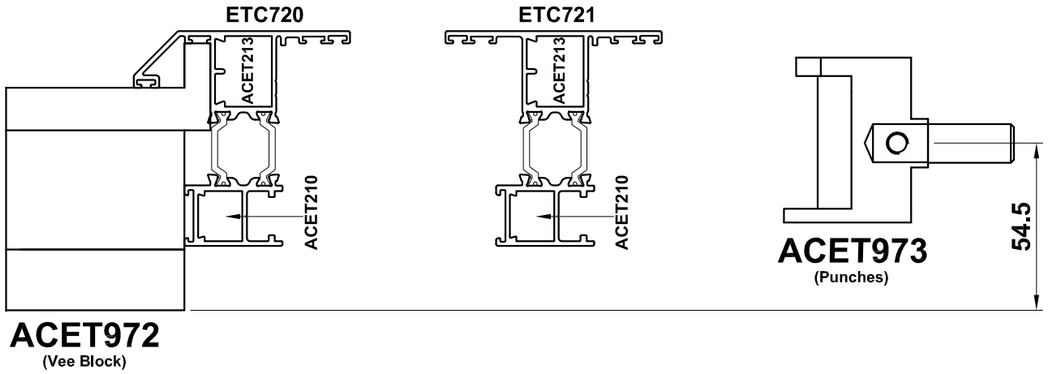

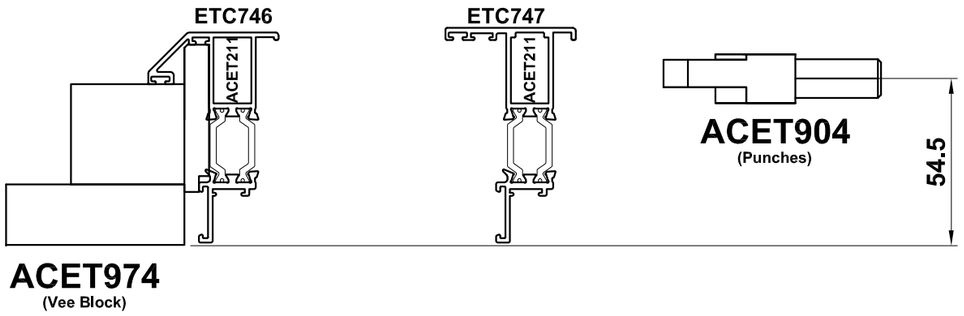

Manual Crimper = WUT024HSZA

Note:
ACSIL04 Sealing Glue & ACSIL013 Cleat Glue must be used. Sections with an internal screw port must be secured. Please refer to page E03 for further details.

Do Not Scale From This Drawing

Transom/Mullion Preparation

Parallel & Casement Window

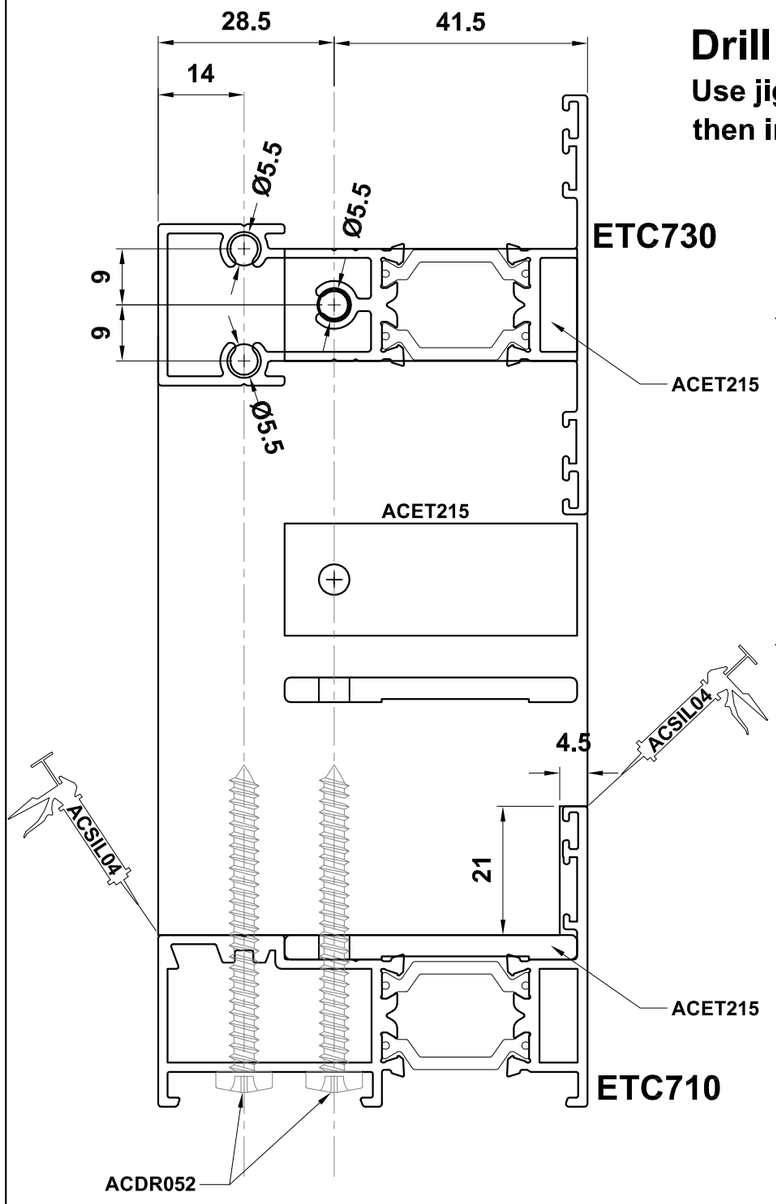

Drill Jig = ACET936

Use jig to drill 3.5mm pilot holes then increase hole size to 5.5mm

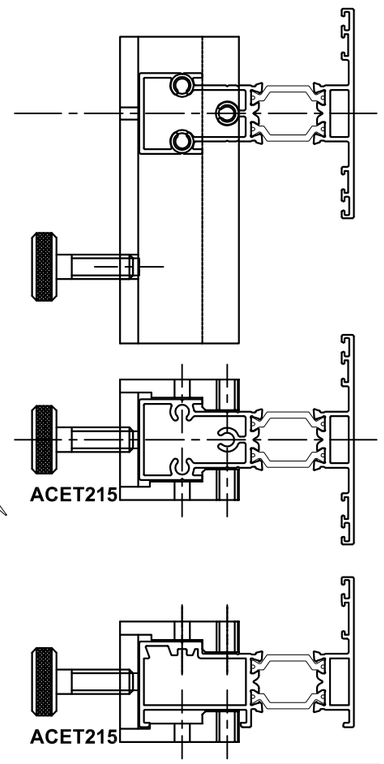

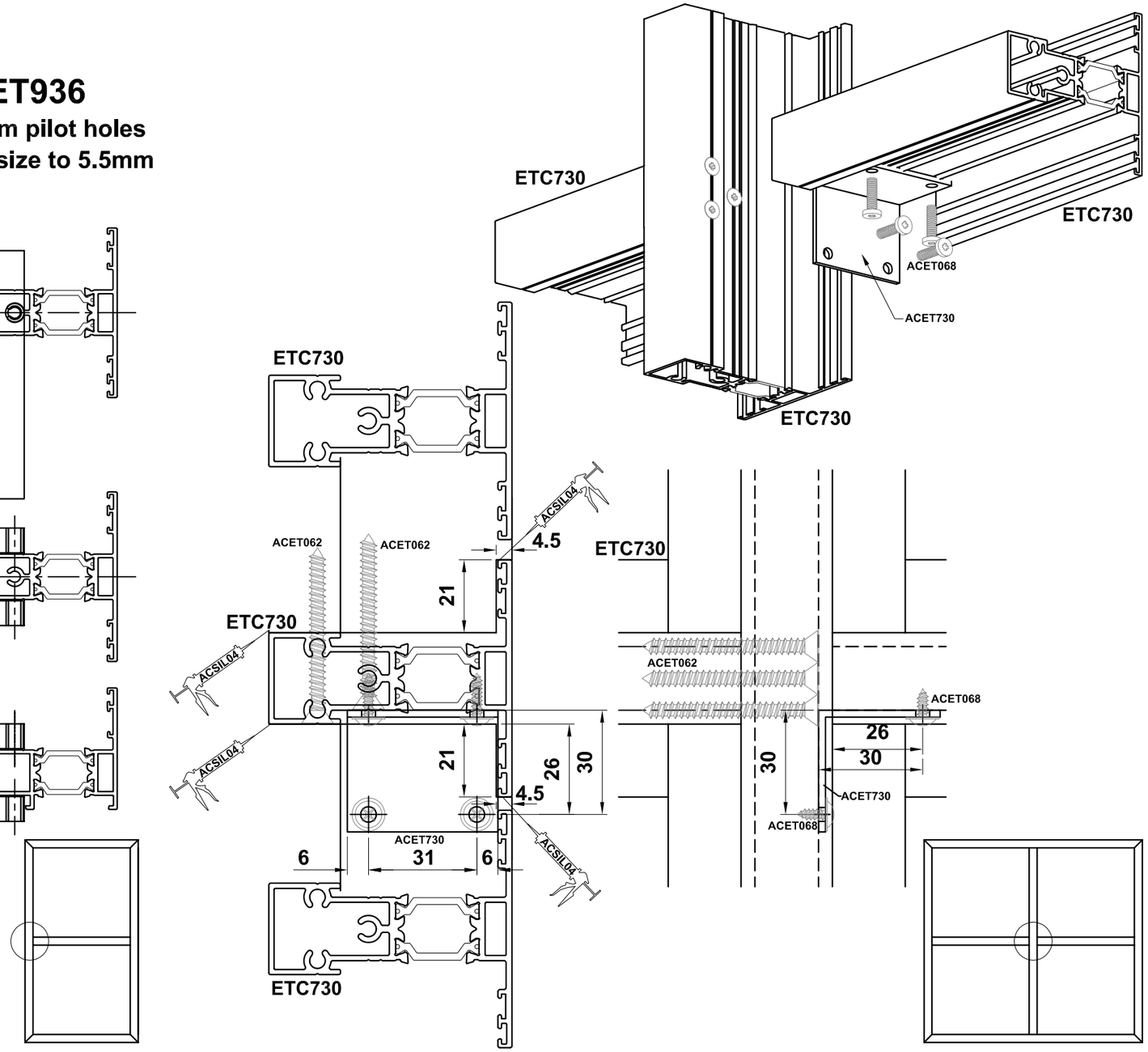

Do Not Scale From This Drawing

Reverse Adaptor Installation

Parallel & Casement Window

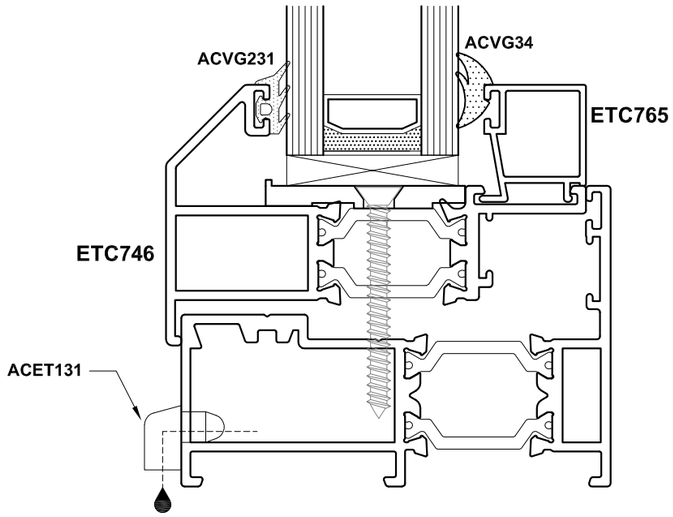

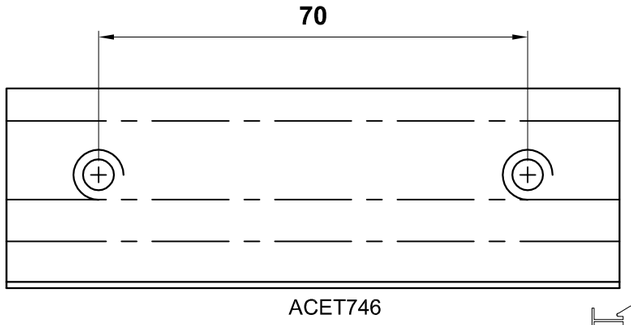

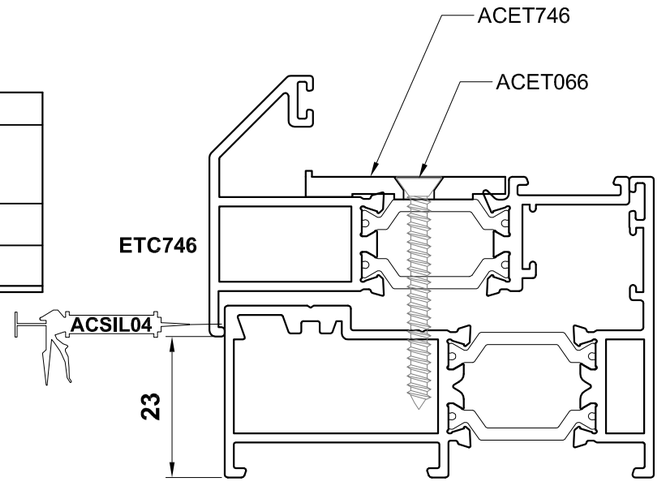

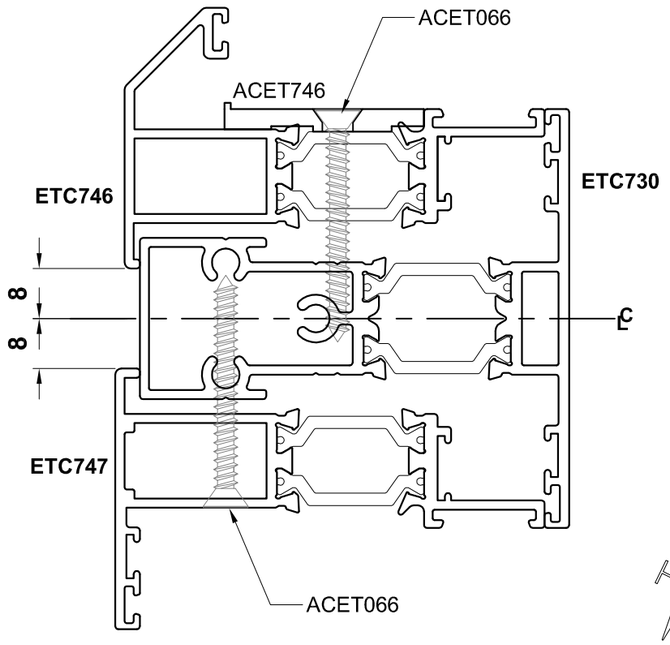

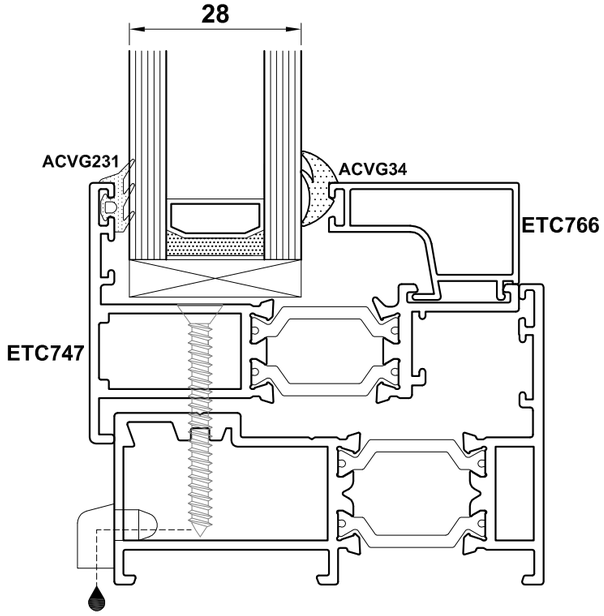

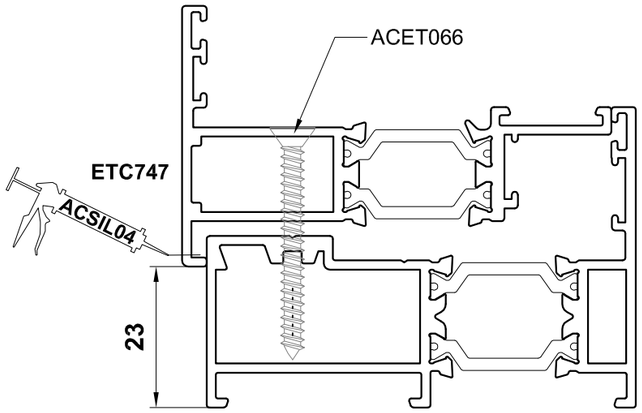

PACKERS & FIXINGS SHOULD BE 50mm FROM CORNERS AND AT 250mm CENTRES
FIXINGS SHALL BE TIGHTENED EQUALLY TO AVOID THE REQUIREMENT OF PACKING

Do Not Scale From This Drawing

Drainage Detail

Parallel & Casement Window

Important Note: All exposed aluminium should be coated using ACSIL014 or painted to match the frame.

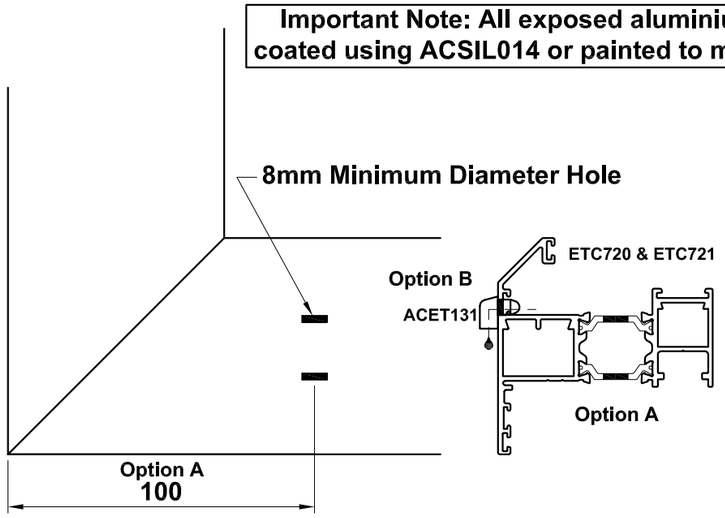

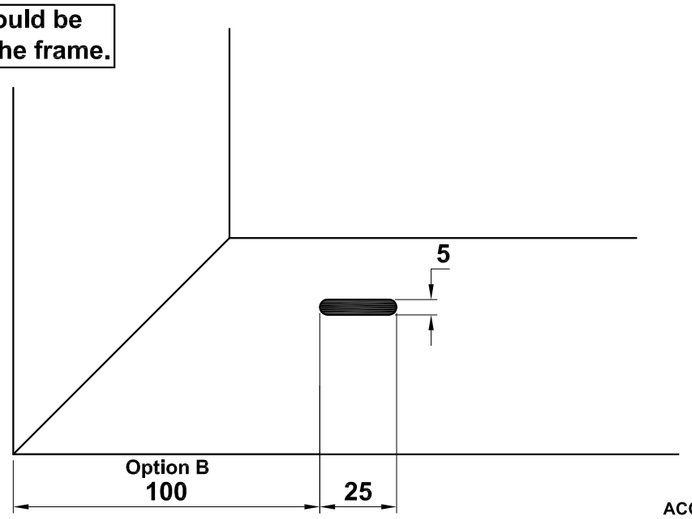

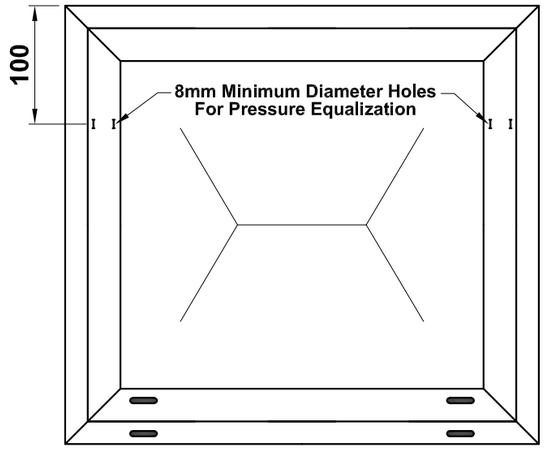

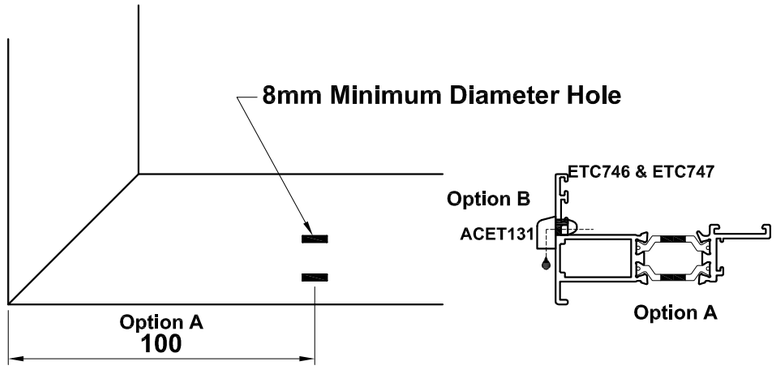

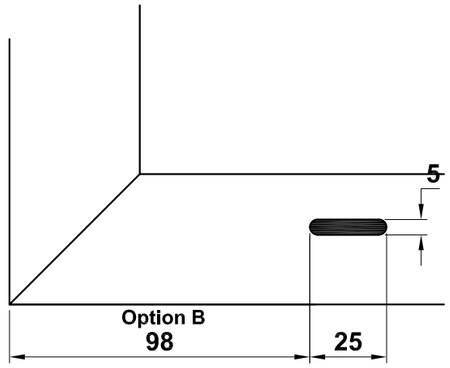

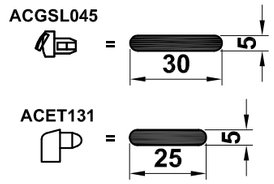

Transom Drainage

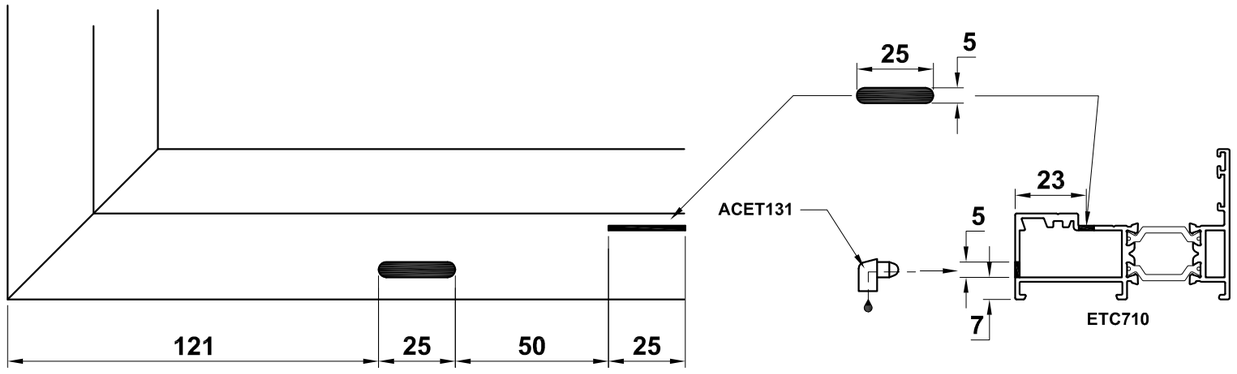

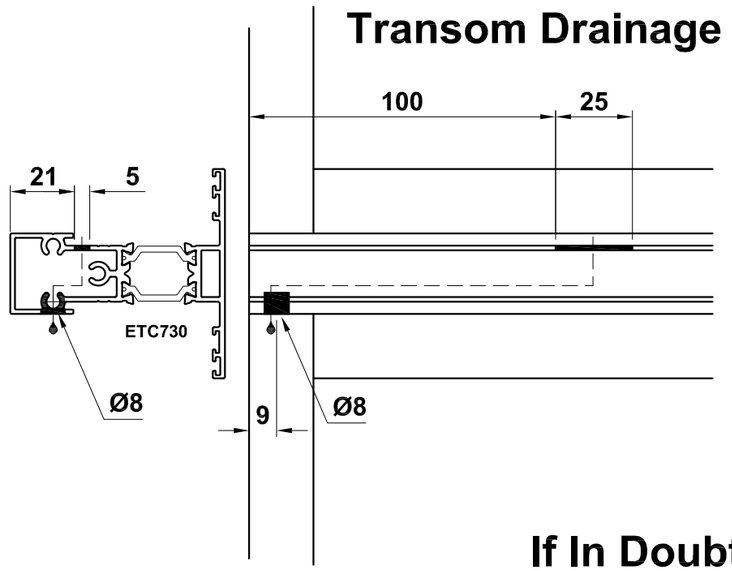

If In Doubt Ask.

Do Not Scale From This Drawing

Multi-Point Locking : Keep Locations / Rod Length — Parallel & Casement Window

Basic locking Kit: ACET710					
Locking Rod Part Codes	Dimension X	Rebate Size		Sash Size	
		Minimum (mm)	Maximum (mm)	Minimum (mm)	Maximum (mm)
ACET711	280	330	640	379	689
ACET712	410	590	900	639	949
ACET713	540	850	1160	899	1209
ACET714	670	1110	1420	1159	1469
ACET715	800	1370	1680	1419	1729

Note: ACET716 222-522mm Lock Extension Rod may be used on windows over 1729mm with the appropriate locking rods.

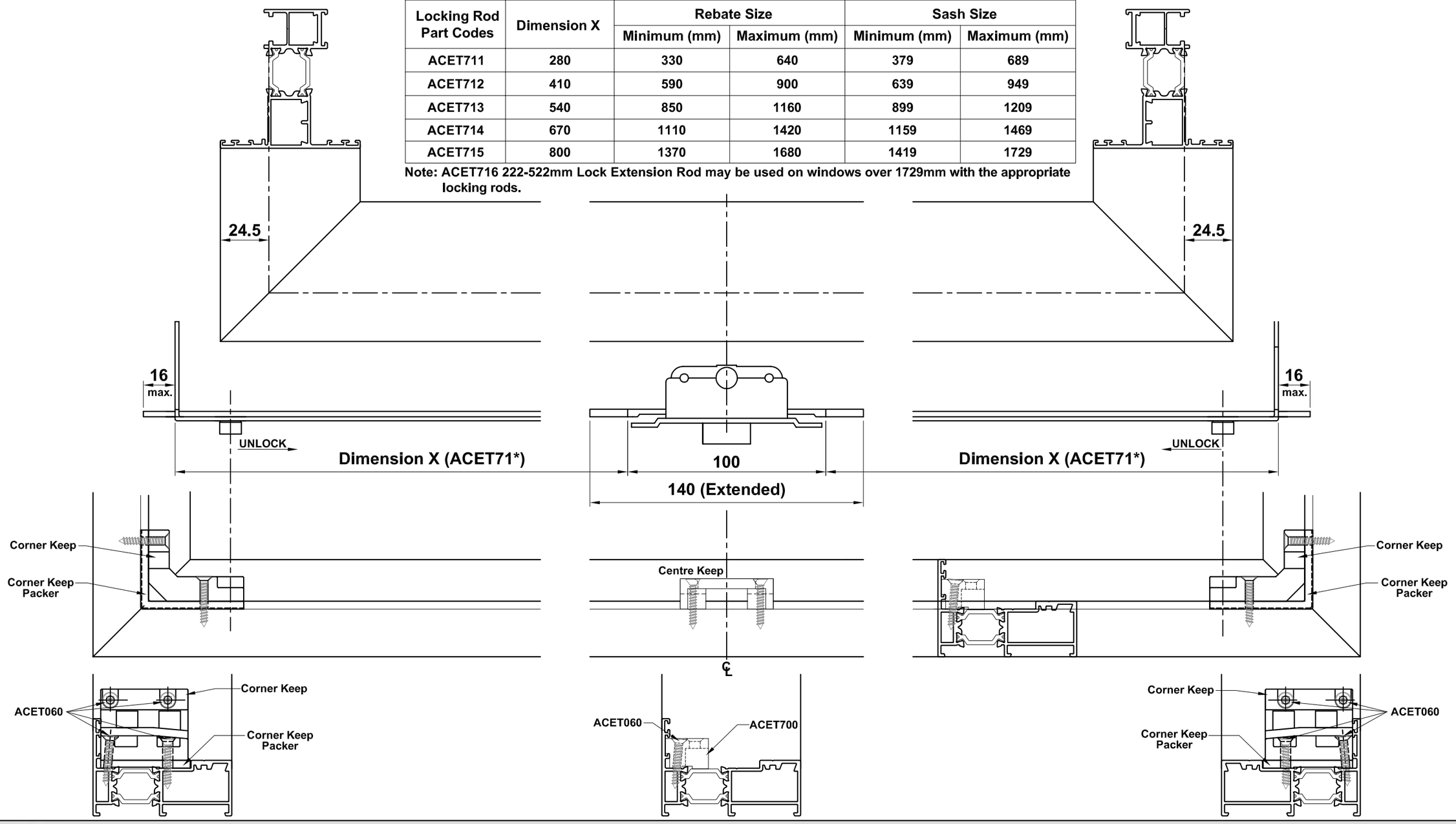

Do Not Scale From This Drawing

Multi-Point Locking Installation

Parallel & Casement Window

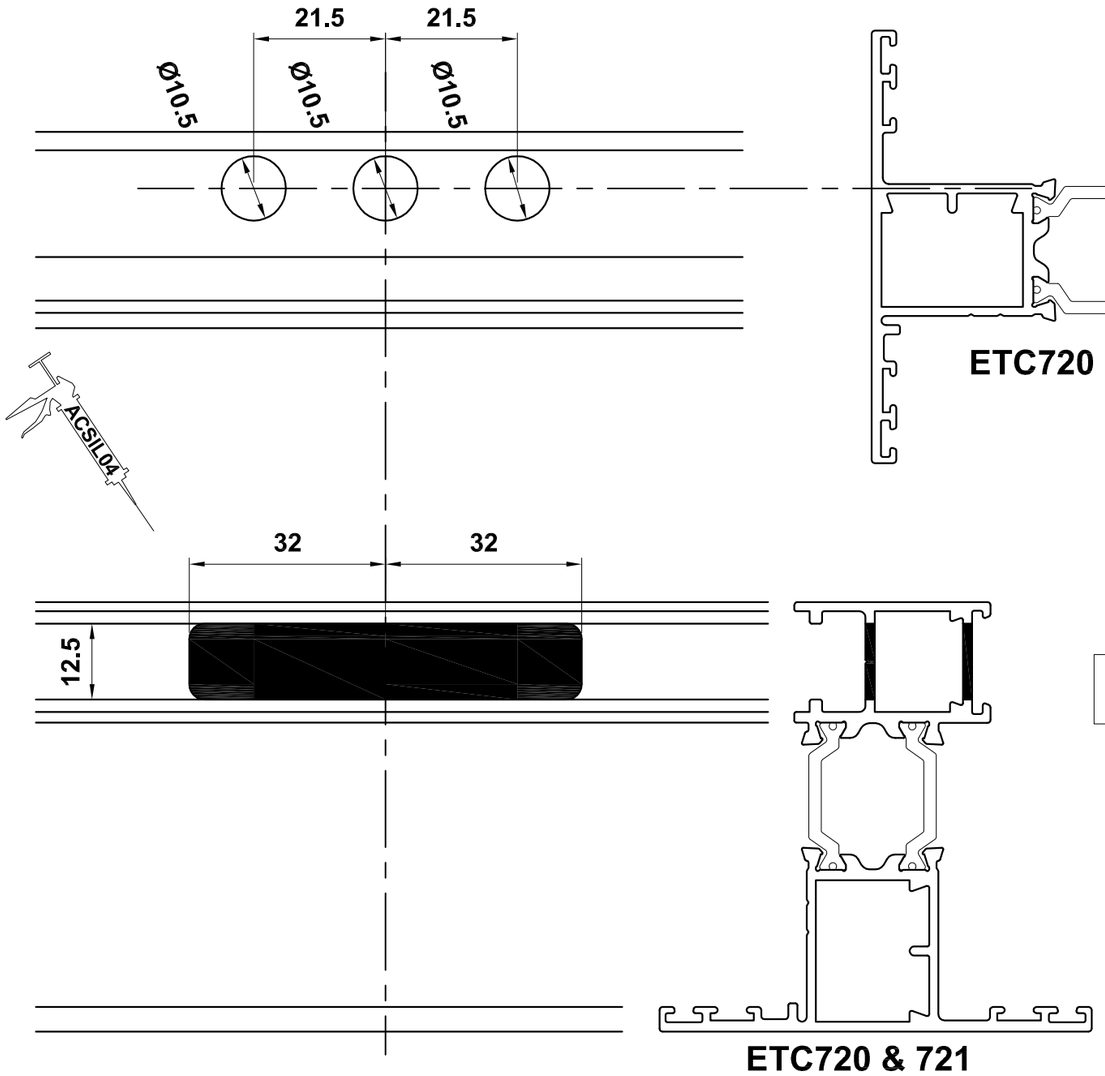

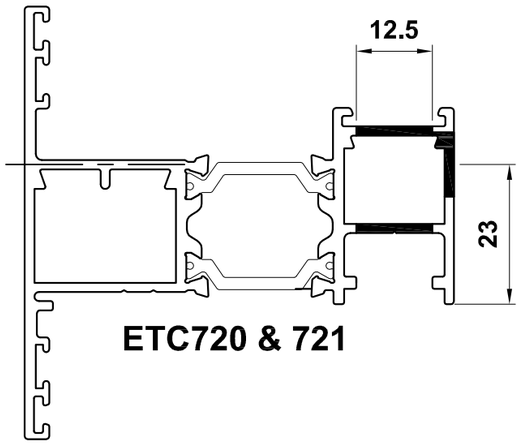

The locking mechanism should be fitted before the parallel hinges.

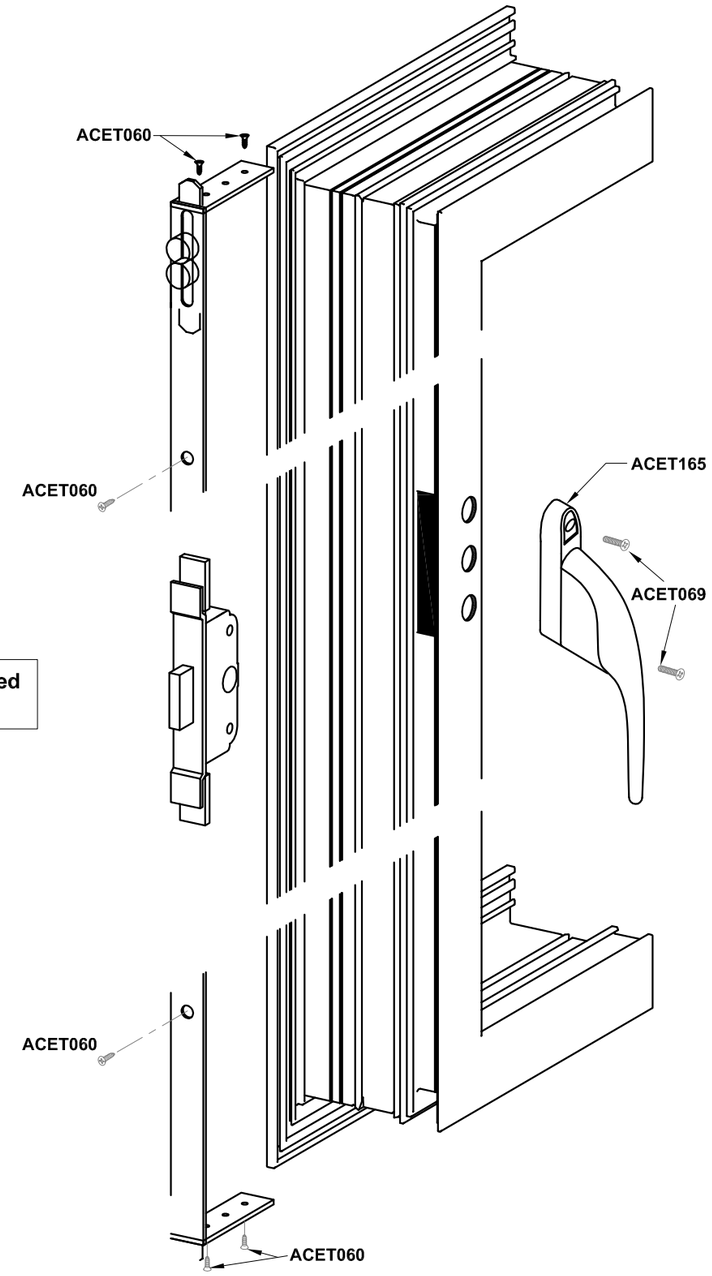

Do Not Scale From This Drawing

Parallel Hinge: Selection

Parallel & Casement Window

Vent Width (mm) Dimension are overall vent sizes

Vent Height (mm)

Vent Height (mm)	400 to 600	500 to 970	970 to 1250	1250 to 2000	1500 to 2000
375 to 750 Vents under 465mm high = Cockspur handle only to prevent clash between hinge & keeps	Manual or Motorised Operation ACETPPS35L/R ACETPPS35L / ACETPPS35R	ACETPPS45L/R ACETPPS35L / ACETPPS35R *	ACETPPS67L/R ACETPPS35L / ACETPPS35R *	ACETPPS95L/R ACETPPS35L / ACETPPS35R See note 4 *	Motorised Operation Only
750 to 1000 Vents under 565mm high = Cockspur handle only to prevent clash between hinge & keeps	ACETPPS35L/R ACETPPS45L / ACETPPS45R *	ACETPPS45L/R ACETPPS45L / ACETPPS45R *	ACETPPS67L/R ACETPPS45L / ACETPPS45R *	ACETPPS95L/R ACETPPS45L / ACETPPS45R See note 4 *	ACETPPS95L/R ACETPPS45L / ACETPPS45R Motorised Only see note 4
970 to 1250 Vents under 785mm high = Cockspur handle only to prevent clash between hinge & keeps	ACETPPS35L/R ACETPPS67L / ACETPPS67R *	ACETPPS45L/R ACETPPS67L / ACETPPS67R *	ACETPPS67L/R ACETPPS67L / ACETPPS67R *	ACETPPS95L/R ACETPPS67L / ACETPPS67R See note 4	ACETPPS95L/R ACETPPS67L / ACETPPS67R Motorised Only see note 4
Vents over 1729mm require extension rods ACET716. See page E17 for more details. 1250 to 2000	ACETPPS35L/R ACETPPS95L / ACETPPS95R	ACETPPS45L/R ACETPPS95L / ACETPPS95R	ACETPPS67L/R ACETPPS95L / ACETPPS95R	ACETPPS95L/R ACETPPS95L / ACETPPS95R See note 4	ACETPPS95L/R ACETPPS95L / ACETPPS95R Motorised Only see note 4
Vents over 2700mm cannot use existing shootbolt locks. Motorised operation is recommended. 2000 to 3000	ACETPPS35L/R ACETPPS95L / ACETPPS95R ACETPPS95L / ACETPPS95R ACETPPS35L/R	ACETPPS45L/R ACETPPS95L / ACETPPS95R ACETPPS95L / ACETPPS95R ACETPPS45L/R	ACETPPS67L/R ACETPPS95L / ACETPPS95R ACETPPS95L / ACETPPS95R ACETPPS67L/R	ACETPPS95L/R ACETPPS95L / ACETPPS95R ** See note 4 ** ACETPPS95L / ACETPPS95R ACETPPS95L / ACETPPS95R ACETPPS95L/R	ACETPPS95L/R ACETPPS95L / ACETPPS95R Motorised Only see note 4 ACETPPS95L / ACETPPS95R ACETPPS95L / ACETPPS95R ACETPPS95L/R

NOTES

1) Hinge Selection Guide for Guidance Only.

Horizontal Hinge	Width
ACETPPS35 (350)	400-600
ACETPPS45 (450)	500-970
ACETPPS67 (670)	970-1250
ACETPPS95 (930)	1250-2000

Vertical Hinge	Height
ACETPPS45 (450)	750-970
ACETPPS67 (670)	970-1250
ACETPPS95 (930)	1250-4000

2) All handles and hinges to be mounted centrally or equally spaced for multiple hinge applications.

3) Whilst one handle is possible on designs marked * for optimum performance it is recommended to offer two handles for all manual operation designs.

4) Designs over 1500mm wide are only suitable for motorised operation.

5) Designs over 2000mm high require two vertical hinges and two horizontal hinges mounted one on the top and one on the bottom of the sash.

4) Maximum sash weight for manual operation is 200Kg but it is the responsibility of the specifier and window manufacturer to ensure the vent operating force meets the requirements of standards where applicable. For motorised vents and for vents where the weight, size, shape or handle position are not covered by these details, please contact Smart Systems Ltd - Technical Department.

6) Optional drop in limit stop restrictors can be fitted to each vent. Two restrictors are required per sash. ACETPRS01 or ACETPRS02 dependent on height.

Hinge Restrictor	Height
ACETPRS01	750-970
ACETPRS02	970-1250
ACETPRS01	1250-4000

For All Parallel Projects Requiring A Smart Systems Guarantee, Contact Smart Systems Technical Department For A Full Hardware Specification. The Hinges Do Not Provide Weather Seal Compression. Multiple Locking Points are Required To Provide Weather Seal Compression

Tolerances u.o.s.
x = ±0.5
x.0 = ±0.2
x.00 = ±0.1
Angles ±0.5°
remove sharp edges Concentricity within 0.3 T.I.R.

Do Not Scale From This Drawing

Parallel Hinge Installation

Parallel & Casement Window

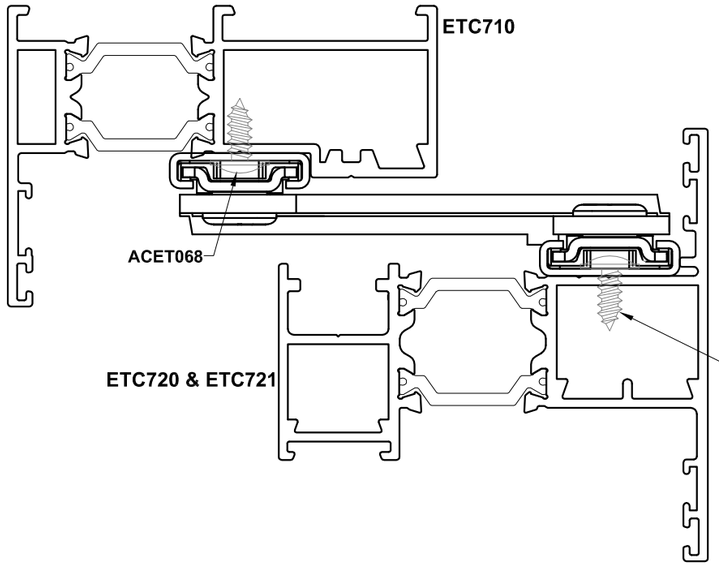

ACET068 TO BE FIXED THROUGH OUTERMOST 'V' LINE

HINGE ADJUSTMENT
WHEN INSTALLING THE VENT INTO THE BUILDING THE PARALLELISM SHOULD BE ADJUSTED ON THE FRAME TRACK FROM INSIDE THE THE BUILDING. THIS IS ACHIEVED BY ROTATING THE CAM ADJUSTER TO MOVE THE VENT IN OR OUT RELATIVE TO THE FRAME. THE VENT TRACK ADJUSTERS CAN BE ALTERED IF FURTHER ADJUSTMENT IS NECESSARY.
THIS CAN BE DONE ON THE TOP AND BOTTOM ADJUSTERS.

ROTATION

HINGE ADJUSTMENT
WHEN INSTALLING THE HINGE IN THE FACTORY THE PARALLELISM SHOULD BE ADJUSTED ON THE VENT SIDE ONLY BY ROTATING CAM ADJUSTER TO MOVE THE VENT IN OR OUT RELATIVE TO THE FRAME. THIS CAN BE DONE ON THE TOP AND BOTTOM CAM ADJUSTERS.

NOTE:- RIGHT AND LEFT HAND HINGE FITTING ADJUSTMENT IS IDENTICAL.

FRAME TRACK MUST BE FITTED PARALLEL TO THE VENT TO ENSURE WINDOW PARALLELISM ON CLOSING

VENT TRACK MUST BE FITTED PARALLEL TO THE VENT TO ENSURE WINDOW PARALLELISM ON CLOSING

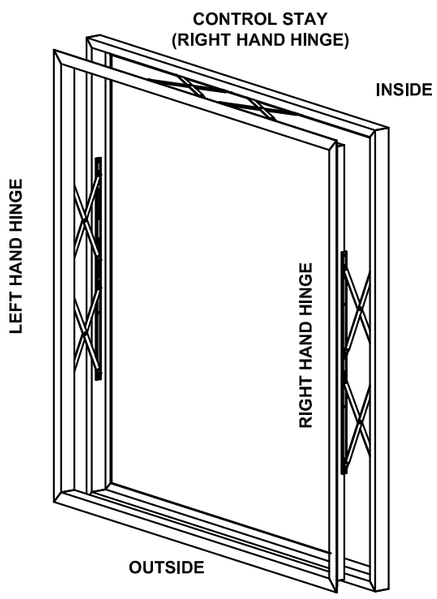

Fit Multi-Point Locking Before Parallel Hinges.

FOR GUIDE TO HINGE SELECTION SEE SECTION B

If In Doubt Ask.

PARALLELISM ADJUSTMENT DEVICE

ROTATION

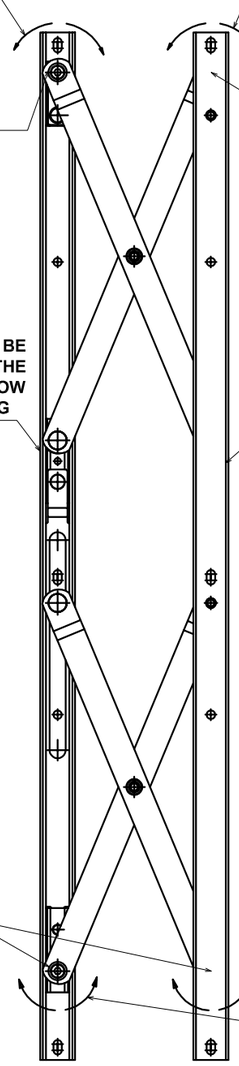

LEFT HAND HINGE
Fixed Pivots to bottom

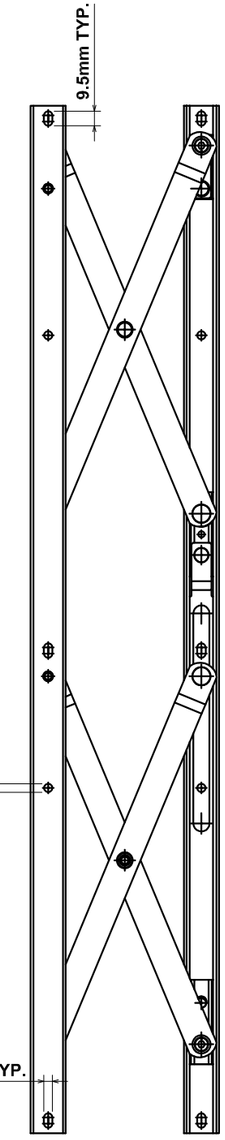

RIGHT HAND HINGE
Fixed Pivots to bottom

Do Not Scale From This Drawing

Parallel Hinge: Opening Restrictor

Parallel & Casement Window

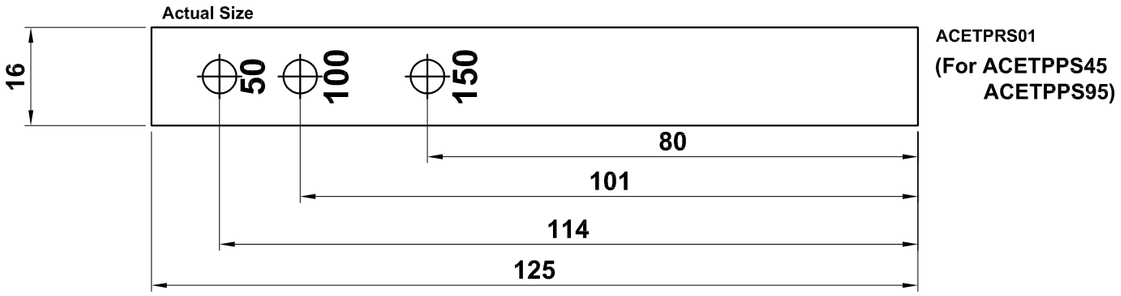

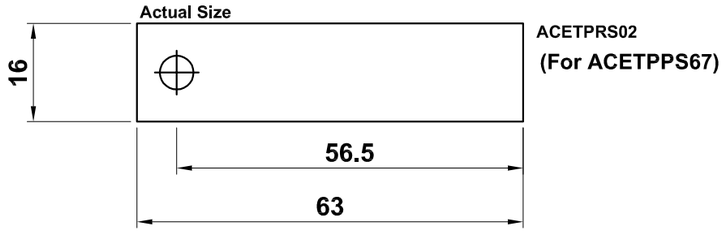

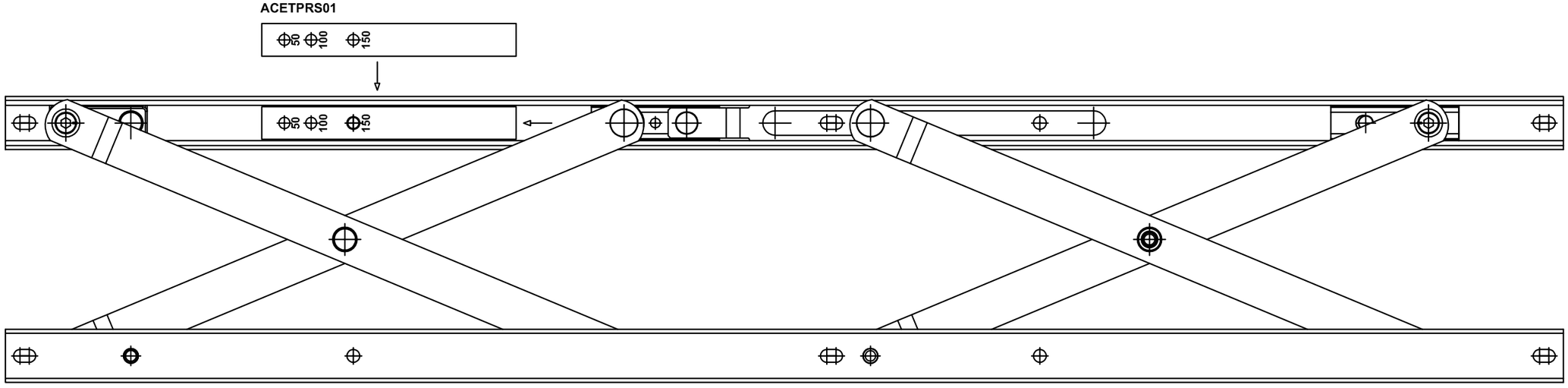

Do Not Scale From This Drawing

Casement Hinge & ACET516 : Installation

Parallel & Casement Window

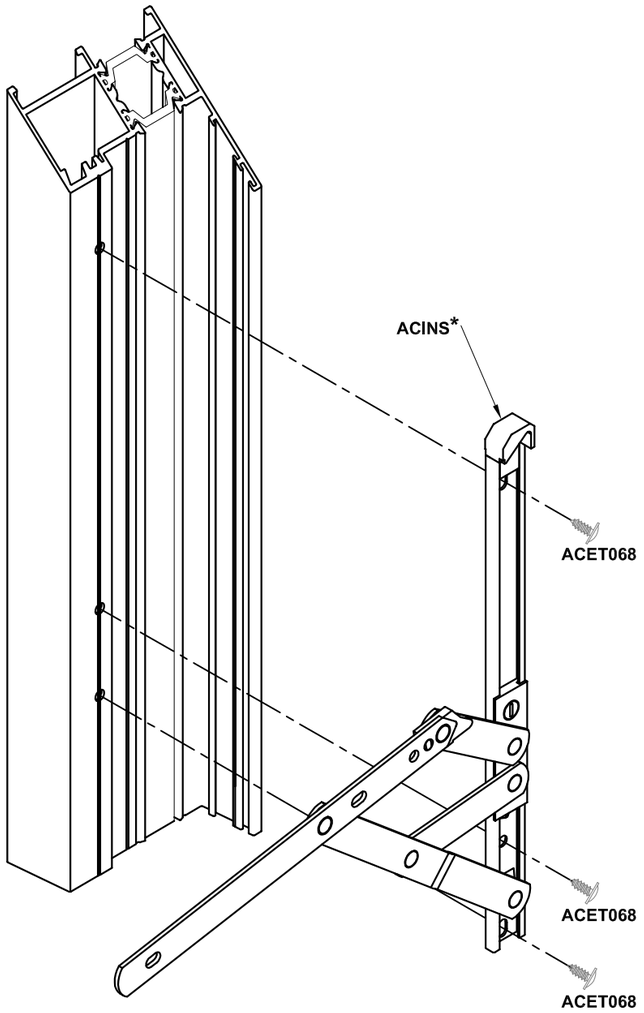

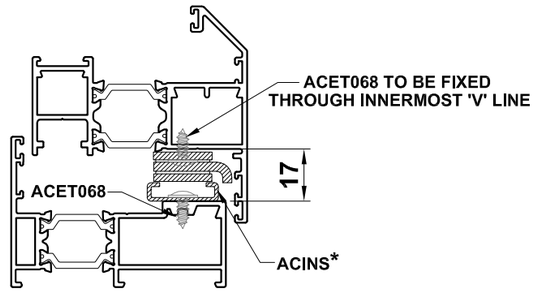

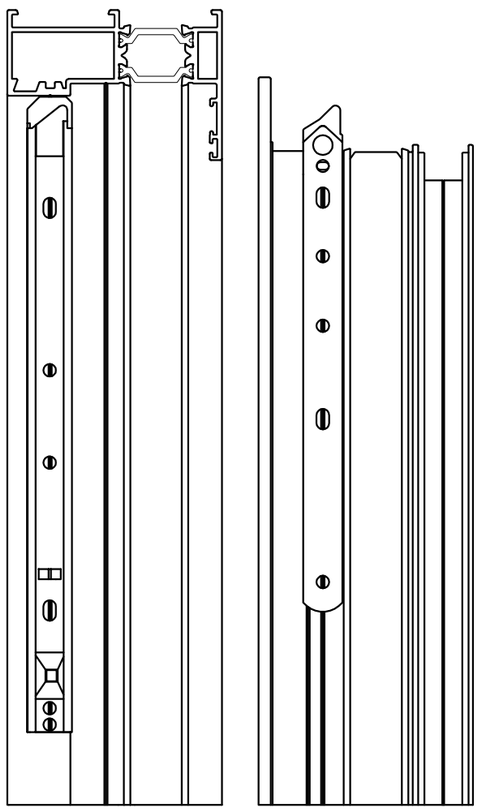

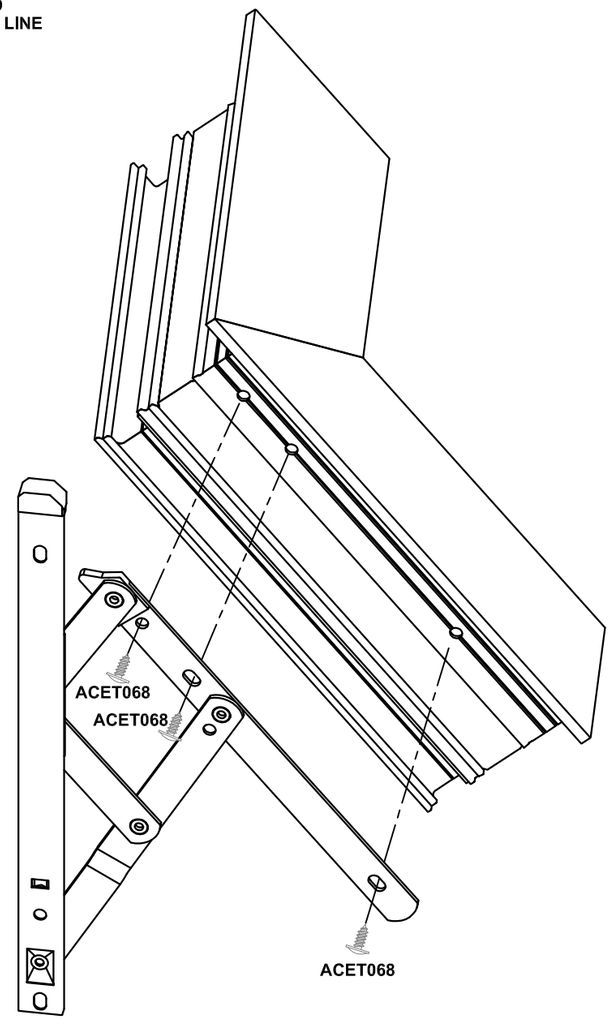

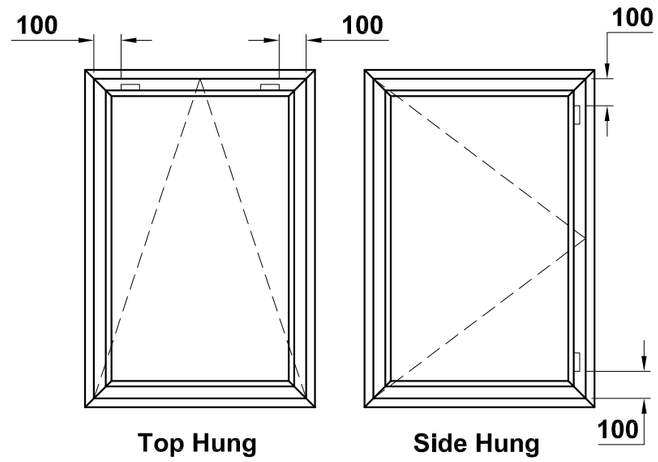

Please Note:

- 2 pairs per opening vent to be fitted to hinged side of window
- Each pair must be fitted with the hook centre within 100mm of each hinge

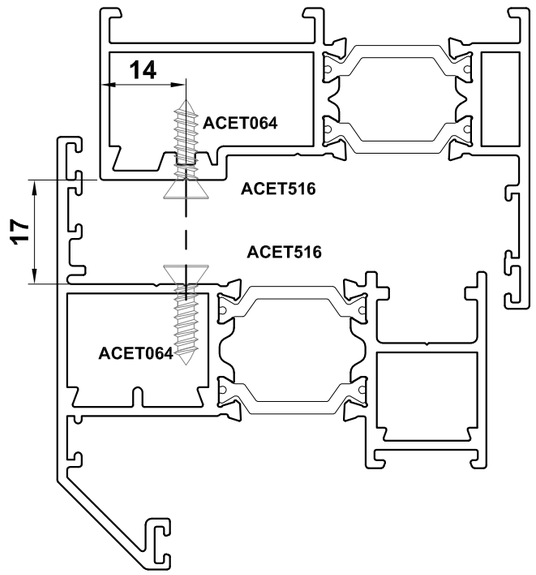

Do Not Scale From This Drawing

Glazing

Parallel & Casement Window

28mm Glazing

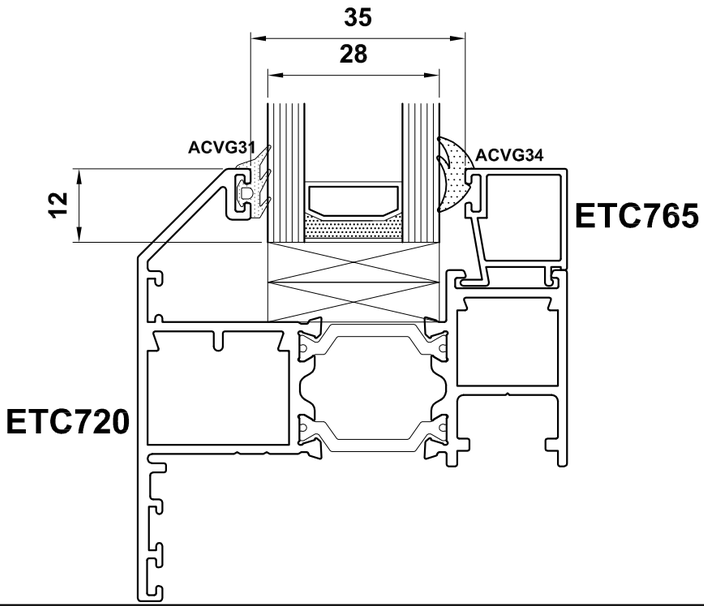

28mm Glazing

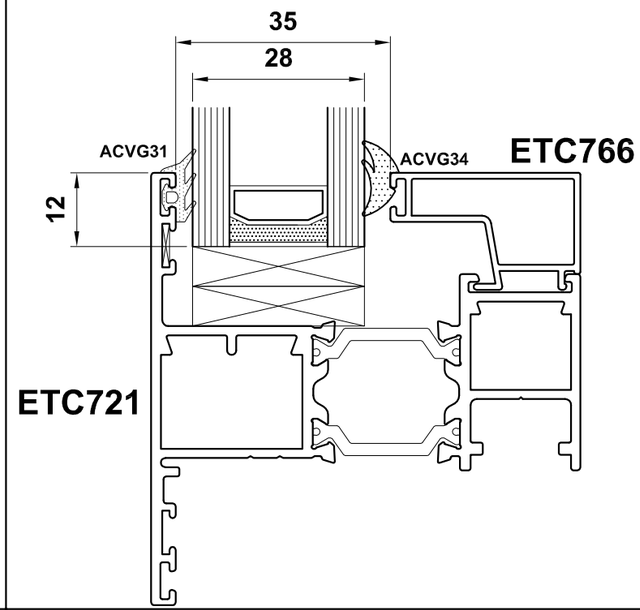

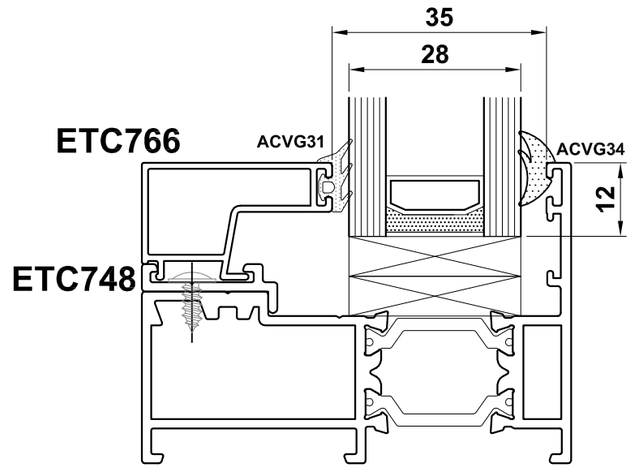

42mm Glazing

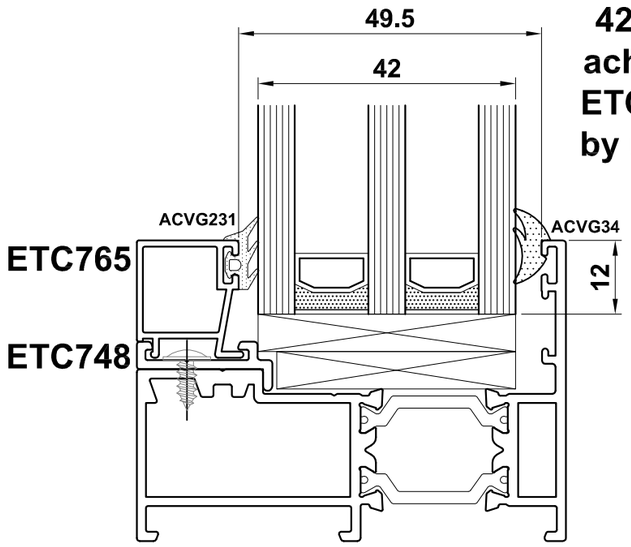

42mm Glazing

42mm glazing can be achieved with ETC721, ETC747 & with ETC748 by using ETC765 bead.

36mm Glazing

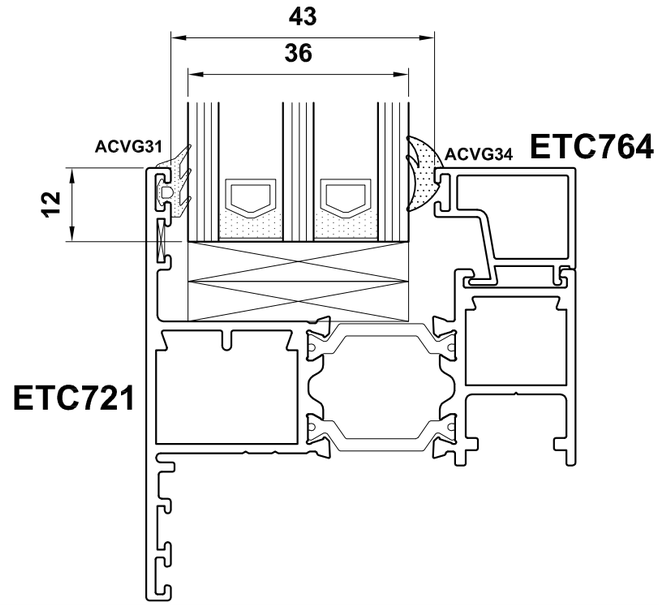

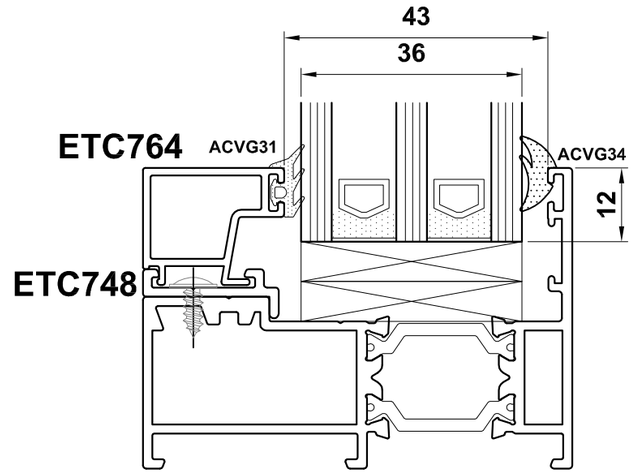

Do Not Scale From This Drawing

Corner Joints

Reversible Window

ETC716 is crimp only

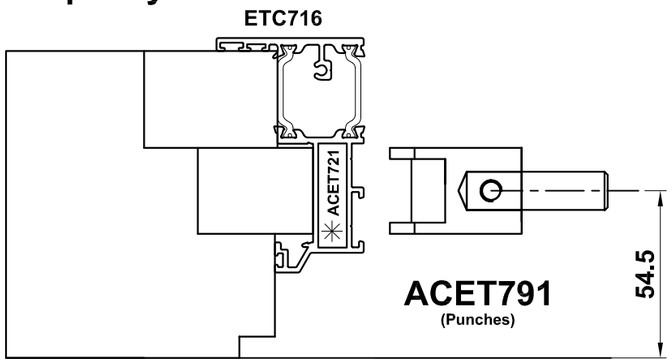

ACET790
(Vee Block)

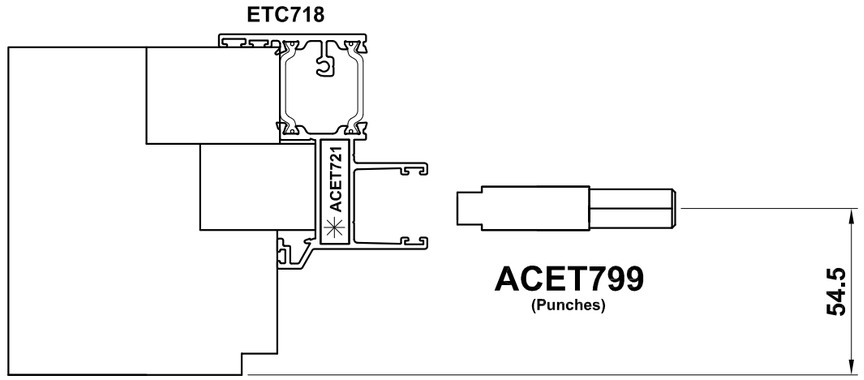

ACET789
(Vee Block)

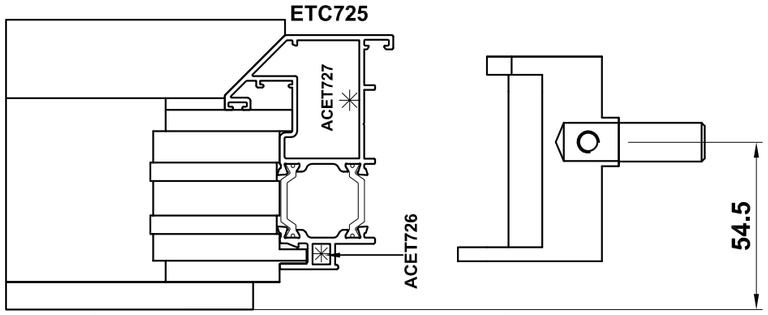

ACET792
(Vee Block)

ACET793
(Punches)

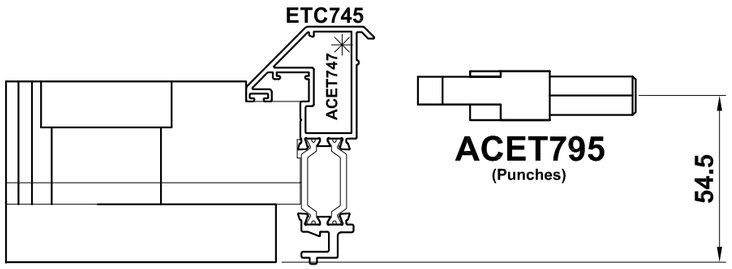

ACET794
(Vee Block)

Manual Crimper = WUT024HSZA

Note:
ACSIL04 Sealing Glue & ACSIL013 Cleat Glue must be used.

Apply ACSIL04 to edge of profile.

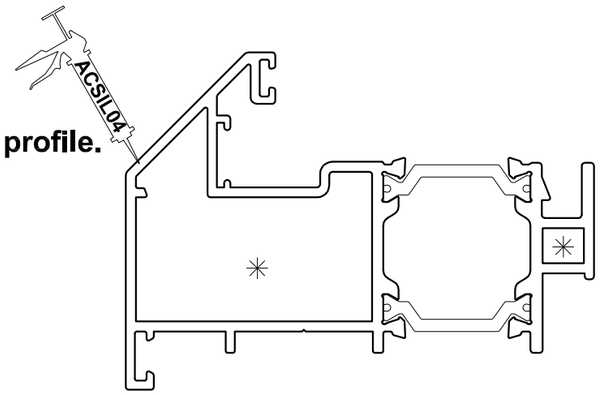

APPLY GLUE (ACSIL013) TO CLEAT APERTURES
IN BOTH SECTIONS MARKED ✳

Do Not Scale From This Drawing

Mullion/Transom Details

Reversible Window

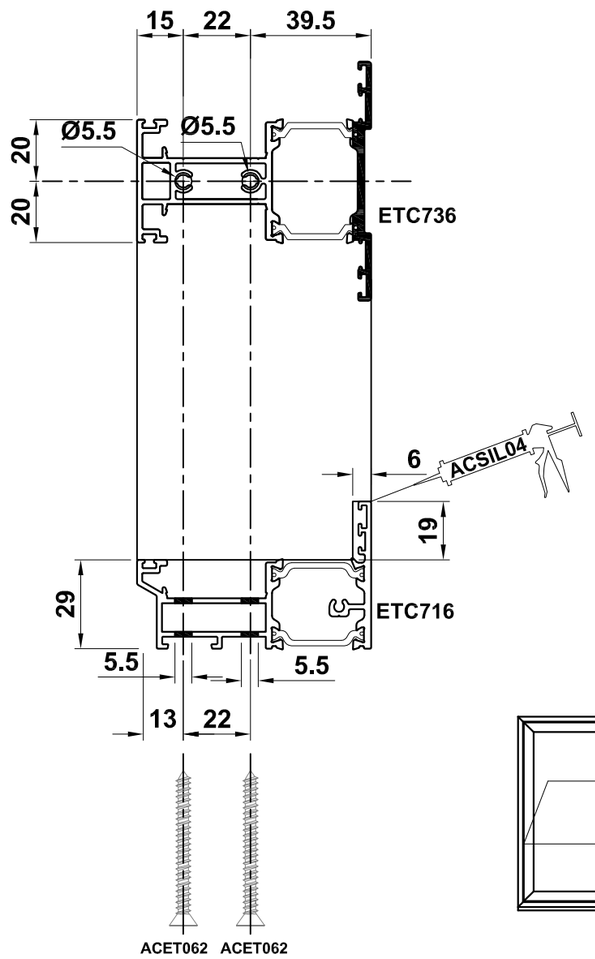

Drill Jig = ACET798

Use jig to drill 3mm pilot holes then increase hole size to 5.5mm

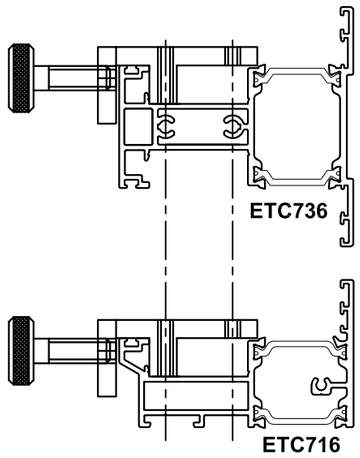

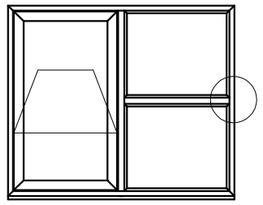

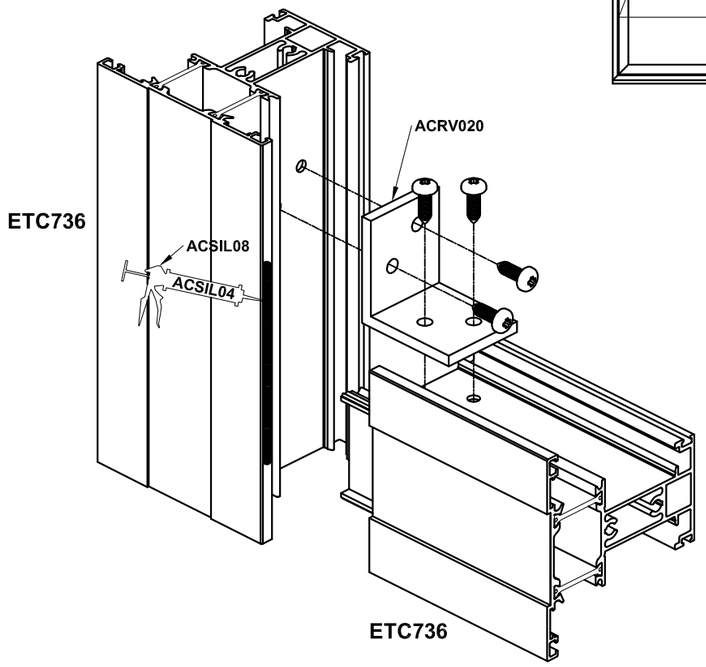

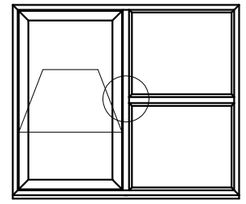

Do Not Scale From This Drawing

Drainage Details

Reversible Window

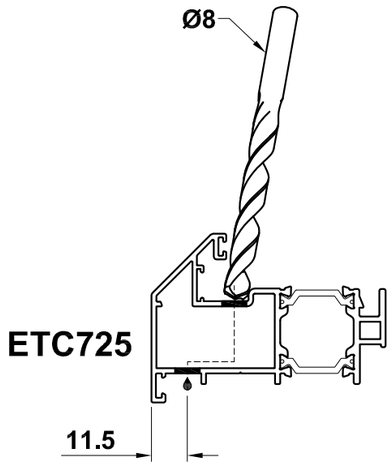

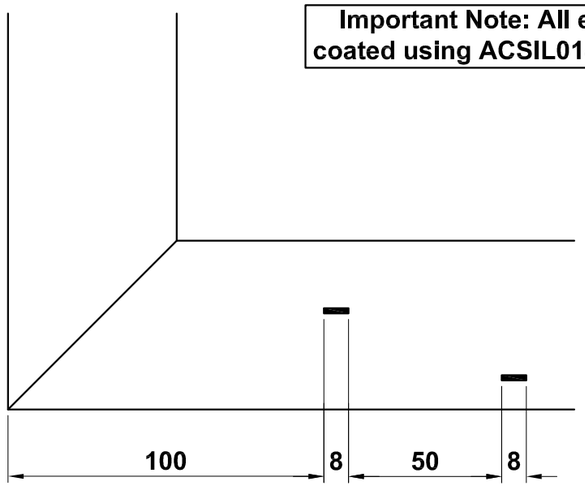

Important Note: All exposed aluminium should be coated using ACSIL014 or painted to match the frame.

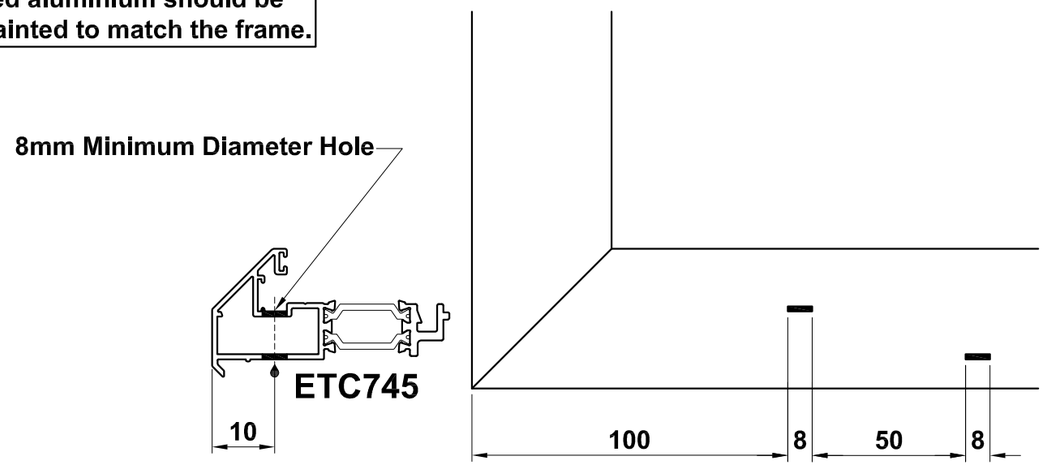

Drainage Slot Types

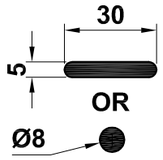

Where not seen

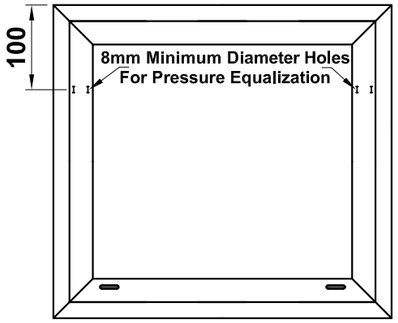

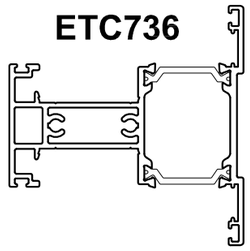

Option A: ETC736 will drain at each end

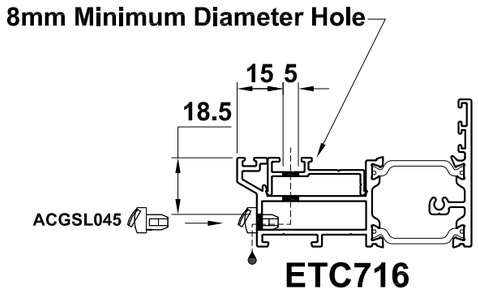

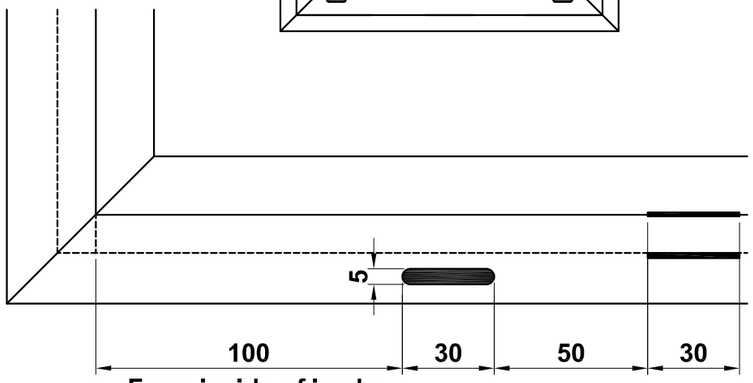

From inside of jambs
&
either side of mullion

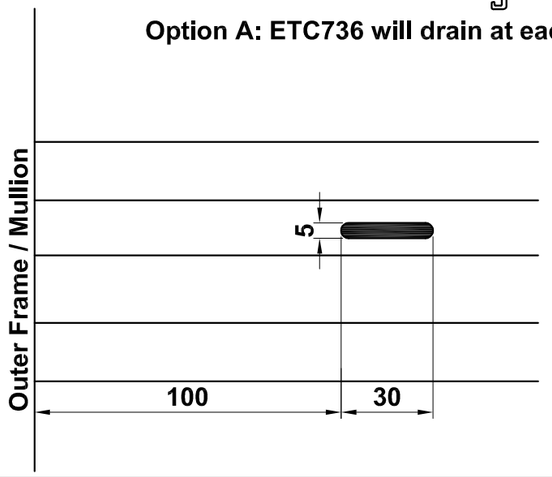

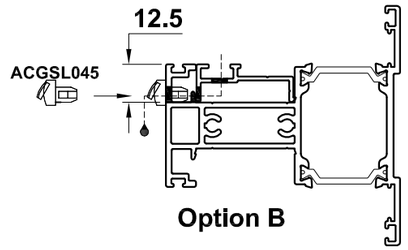

Option B

Do Not Scale From This Drawing

Hinge Selection & Fitting

Reversible Window

Please order the below components from:
VBH Great Britain
Tel: 01675 466411
Fax: 01675 466300
Email: birmingham.sales@vbhgb.com

Hinge Size Chart

Module Size	Standard Hinge	Hotel Variant	Hinge Length	Sash Height	Optimum Size Range	Box Quantity	Dimension F
M6	2AST0001	2AST0101	524	458 - 558	458 - 537	10	238
M6.5	2AST0089	-	580	515 - 615	537 - 579	10	264
M7	2AST0002	2AST0102	624	558 - 658	479 - 637	10	288
M7.5	2AST0090	2AST0103	680	615 - 715	637 - 679	10	312
M8	2AST0003	2AST0104	724	658 - 758	679 - 737	10	338
M8.5	2AST0091	2AST0105	780	715 - 815	737 - 779	10	364
M9	2AST0004	2AST0106	824	758 - 858	779 - 837	10	388
M9.5	2AST0092	2AST0107	880	815 - 915	837 - 879	10	412
M10	2AST0005	2AST0108	924	858 - 958	879 - 937	10	438
M10.5	2AST0093	2AST0109	980	915 - 1015	937 - 979	10	458
M11	2AST0011	2AST0110	1024	958 - 1037	979 - 1037	10	488
M11.5	2AST0094	2AST0111	1080	1015 - 1079	1038 - 1079	10	512
M12	2AST0008	2AST0112	1124	1058 -1137	1079 - 1137	10	538
M12.5	2AST0095	2AST0113	1180	1115 - 1215	1138 - 1179	10	564
M13	2AST0009	2AST0114	1224	1158 - 1258	1179 - 1237	10	588
M13.5	2AST0096	2AST0115	1280	1215 - 1315	1238 - 1279	10	612
M14	2AST0010	2AST0116	1324	1258 - 1358	1279 - 1337	10	638
M14.5	2AST0097	-	1380	1315 - 1415	1338 - 1379	10	664
M15	2AST0015	2AST0117	1424	1358 - 1458	1379 - 1437	10	688
M15.5	2AST0098	-	1480	1415 - 1515	1438 - 1479	10	712
M16	2AST0016	2AST0118	1524	1458 - 1558	1479 - 1537	10	738

Required Accessories

		Box Quantity
Top Glider (pair)	2AST0011	10
Centre Bracket (pair)	2AST0012	10

Optional Accessories

		Box Quantity
Stop Block	2AST0014	20
Guide Block	2AST0017	100
Blocking Device	2AST0029	20

Please Note:

1. Reversible hinges are sold in pairs (1 restricted & 1 unrestricted hinge)
2. Max sash height 1558mm
3. Max sash weight 60kg
4. One reversible sash requires a pair of hinges, a pair of centre brackets & a pair of top gliders
5. Where hinges a cut down to fit into the outer frame, Dimension F shall be reduced by the same amount
6. Hotel Variant hinges can be closed without operating the 'PRESS' button

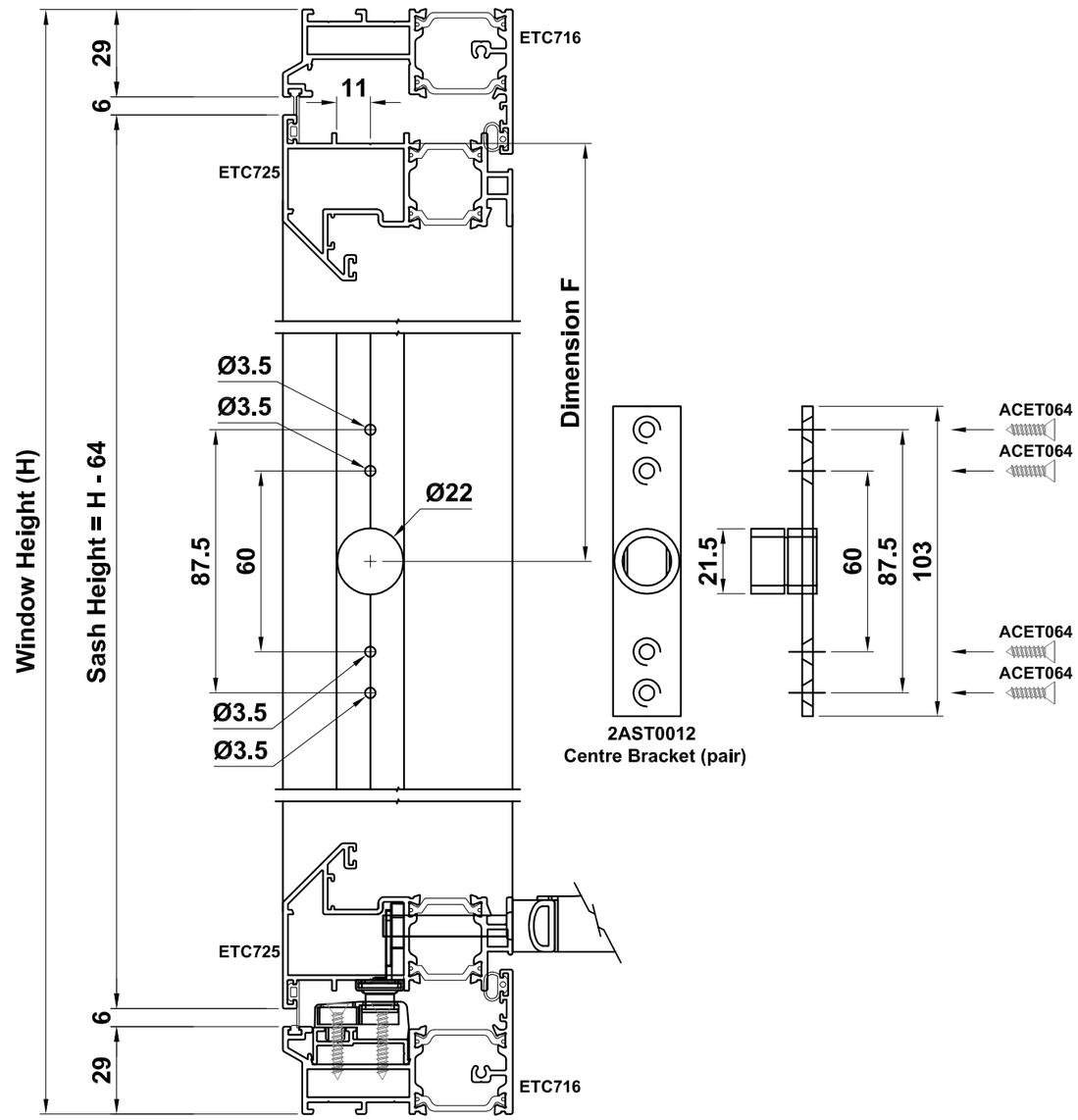

Do Not Scale From This Drawing

Hinge & Top Guide Fixing

Reversible Window

Hinge Fitting

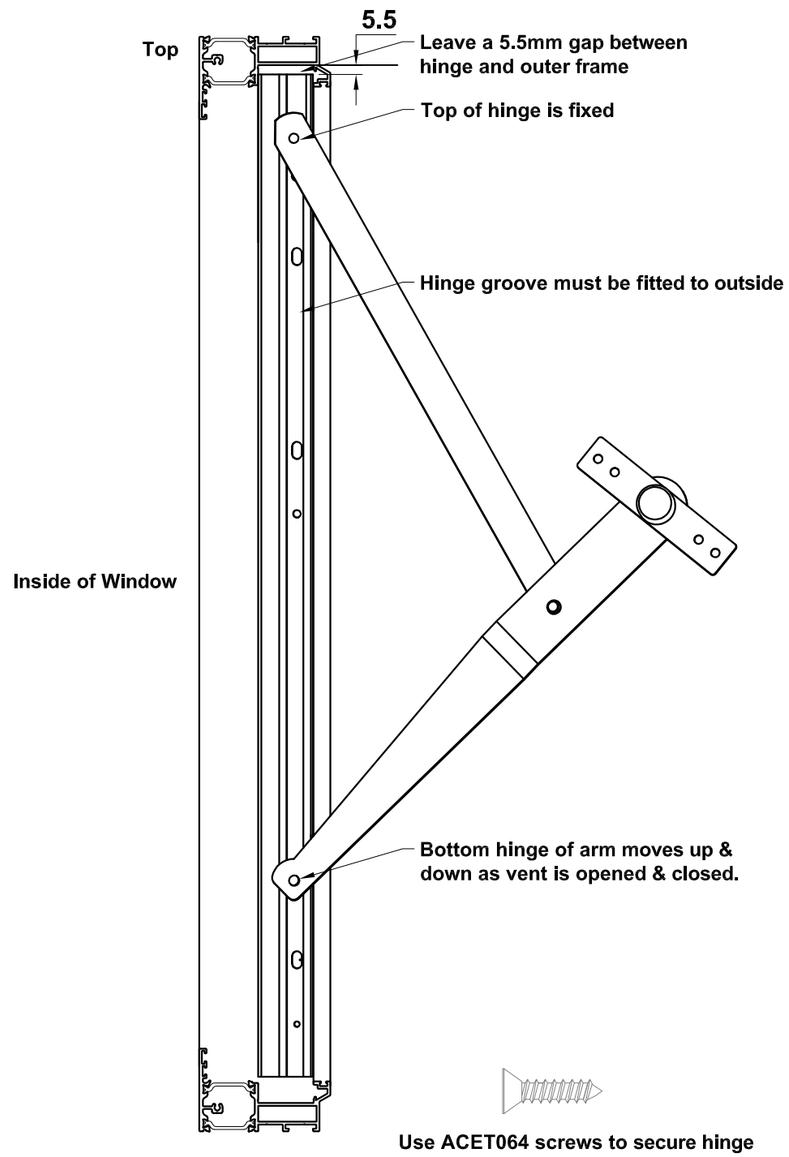

Top Guide Fitting

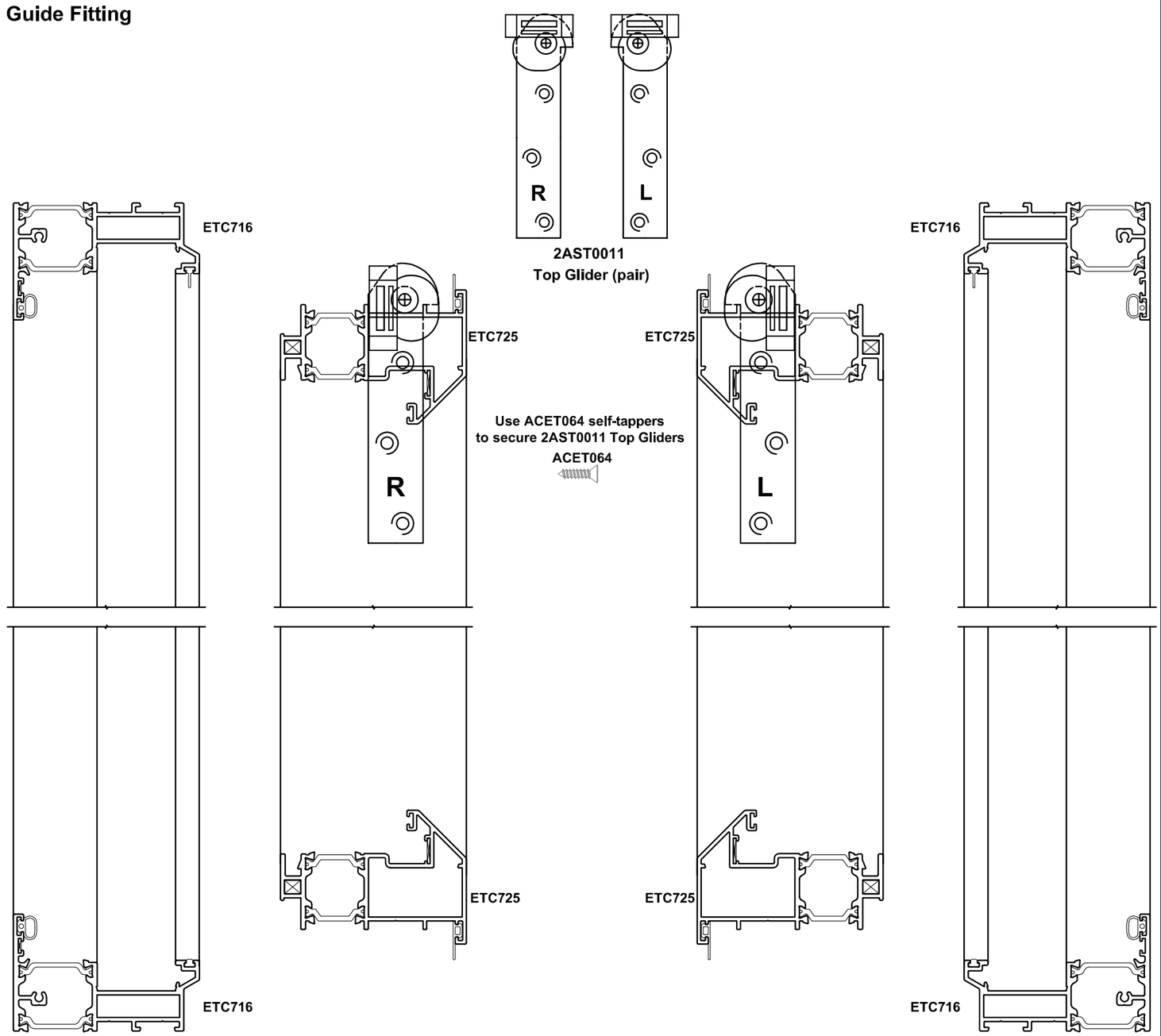

Do Not Scale From This Drawing

Hanging Instructions

Reversible Window

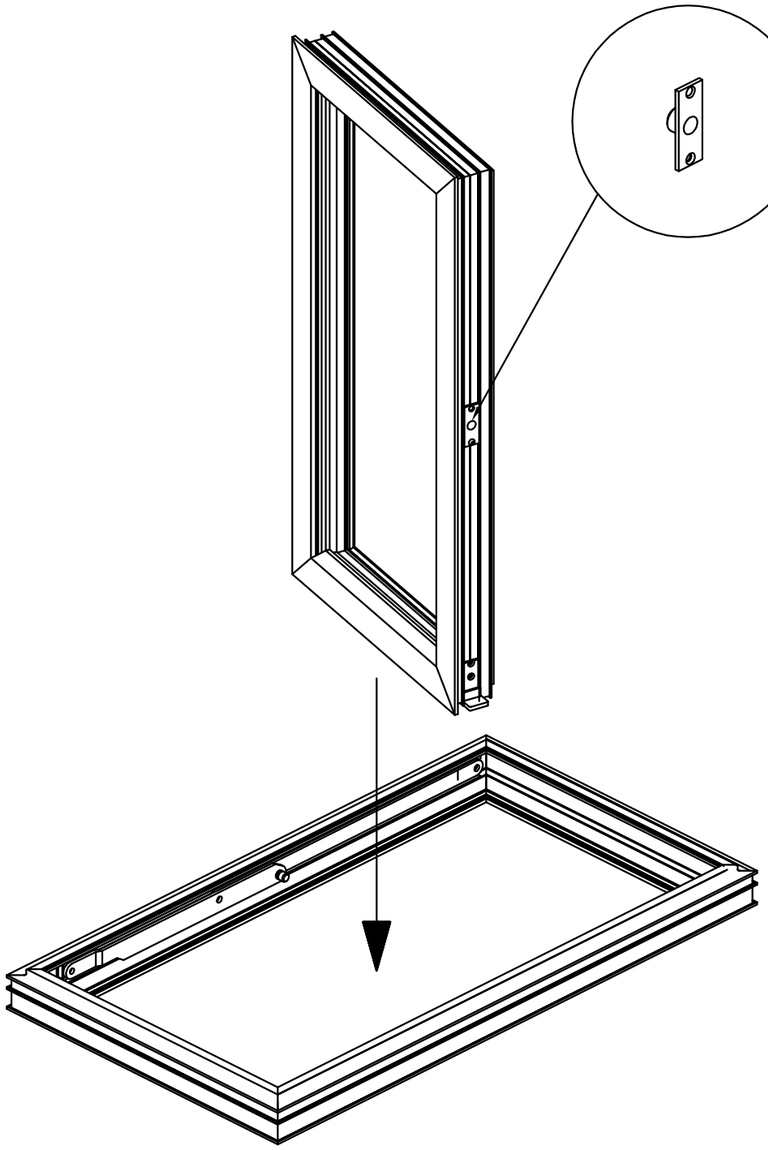

Fix the hinge to the frame jambs.
Fix the head slide bracket and one screw in the centre sash assembly.

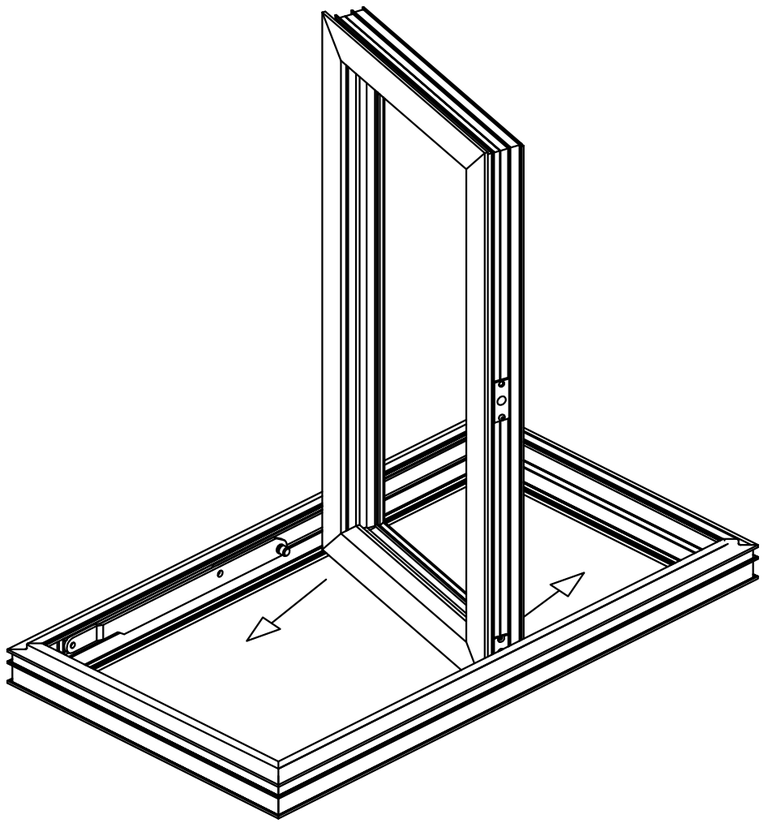

Place the frame flat, inside down.
Lower the sash vertically with headslides down.
Slide the headslides into the sliding channel.

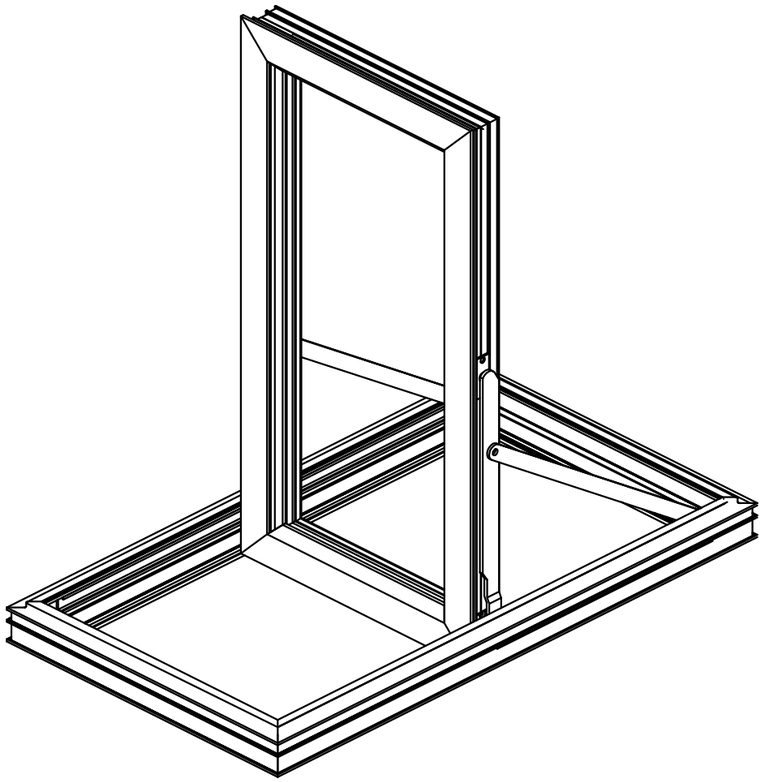

Lift one hinge at a time, couple hinge pivot to centre sash assembly and secure with second screw.

Do Not Scale From This Drawing

Reverse Espag Locking

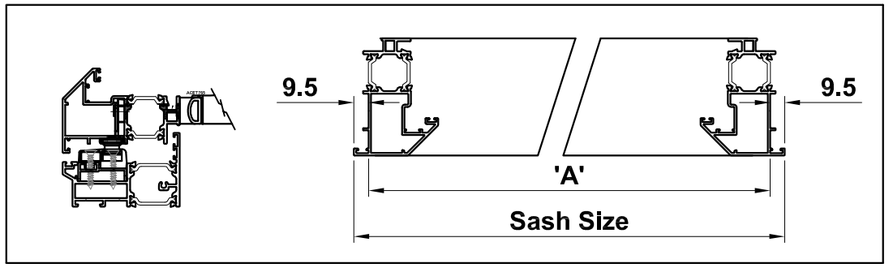

Part Code	Rod Length (mm)	Number of Keeps	Sash Rebate Size ('A')	
			Minimum	Maximum
ACET771L	335	2	340	505
ACET771R				
ACET772L	500	2	506	755
ACET772R				
ACET773L	750	2	756	1005
ACET773R				
ACET774L	1000	4	1006	1255
ACET774R				
ACET775L	1250	4	1256	1400
ACET775R				

Note: To Suit Handle ACET765

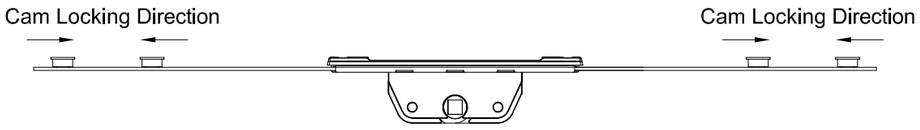

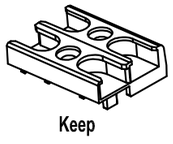

Reversible Window

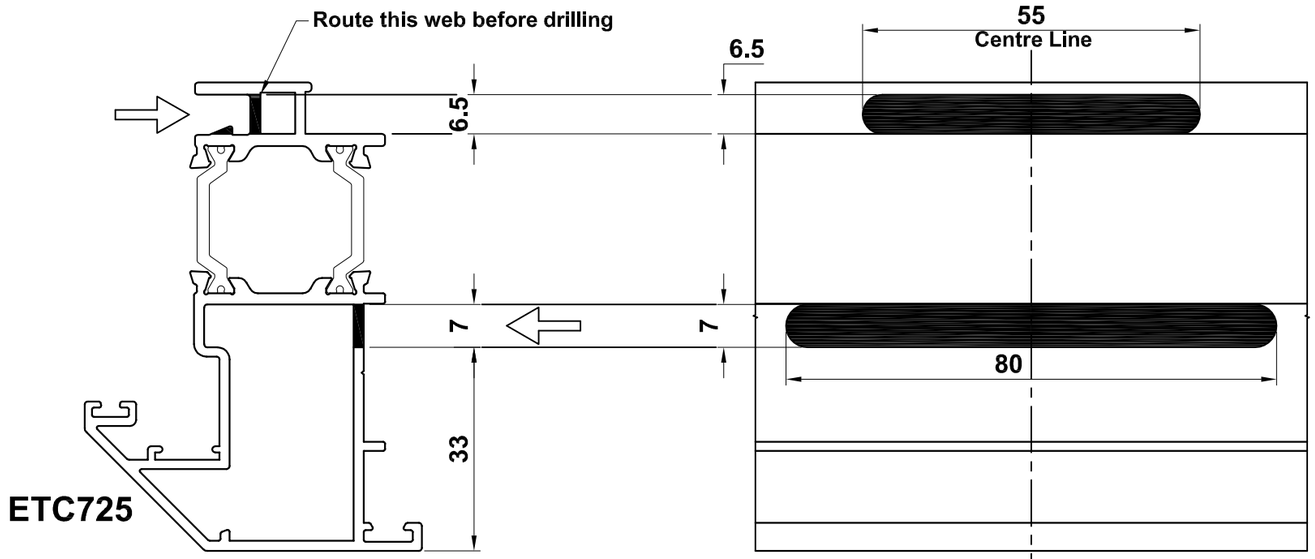

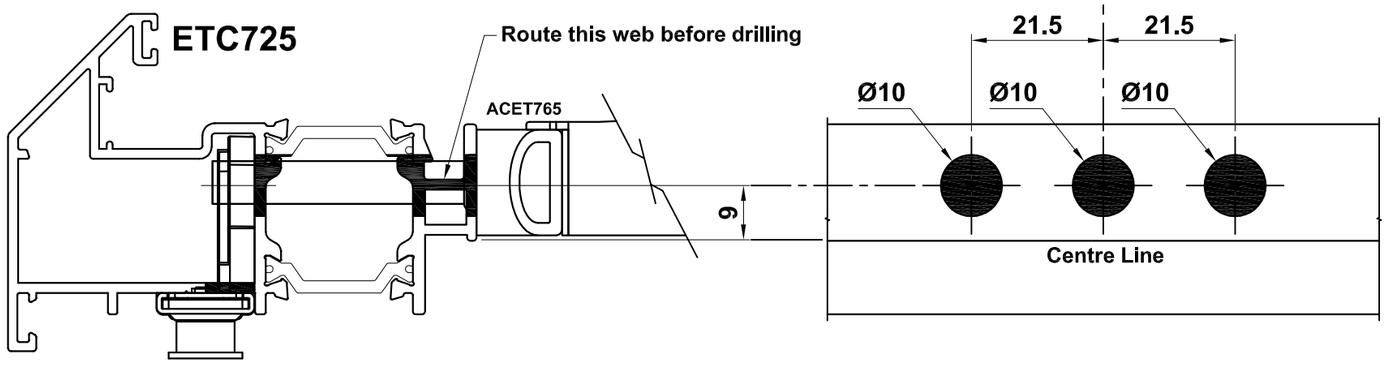

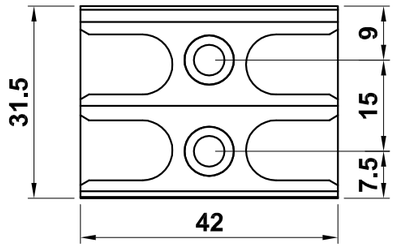

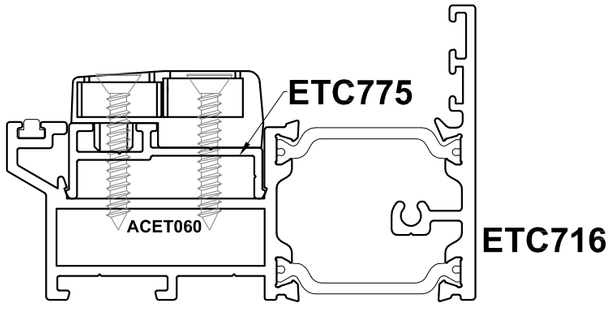

Do Not Scale From This Drawing

Multi-Point Locking

Reversible Window

Please order the below components from:
VBH Great Britain
Tel: 01675 466411
Fax: 01675 466300
Email: birmingham.sales@vbhgb.com

Locking Rods

Locking Rod	Length (mm)	Keep Quantity	Sash Width Limits
2INE0002	250	2	269 - 418
2INE0003	400	2	419 - 618
2INE0004	600	2	619 - 818
2INE0005	800	3	819 - 1018
2INE0006	1000	3	1019 - 1218
2INE0007	1200	3	1219 - 1500

Accessories

		Box Quantity
Keeps	2WES0336	10
LH White Handle	2CEG0250	25
RH White Handle	2CEG0251	25
LH Satin Chrome Handle	2CEG0254	25
RH Satin Chrome Handle	2CEG0255	25
LH Gold Handle	2CEG0258	25
RH Gold Handle	2CEG0259	25

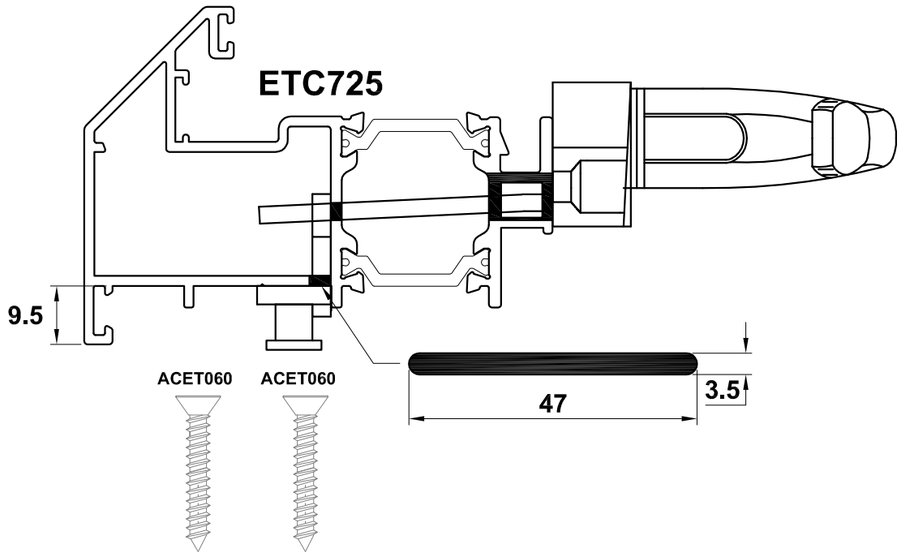

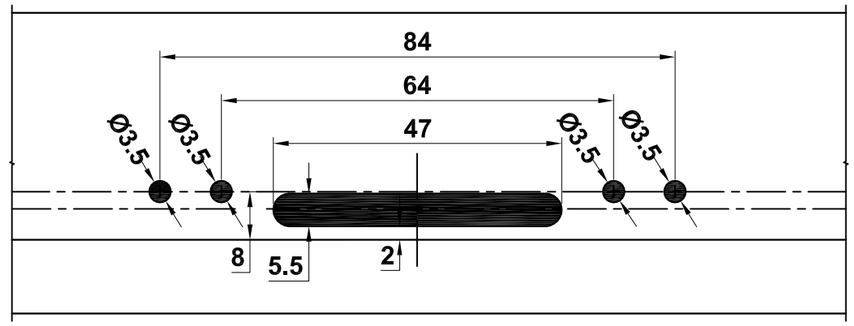

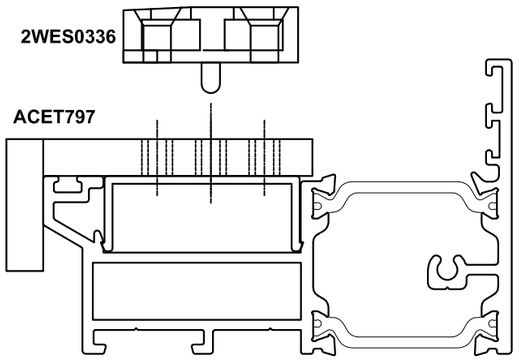

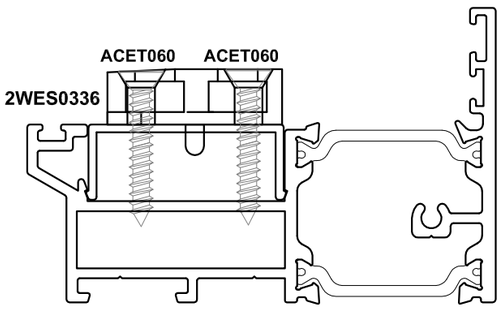

Drill Jig = ACET797

Use jig to drill 3mm holes.
ACET797 must be clamped into position prior to drilling.

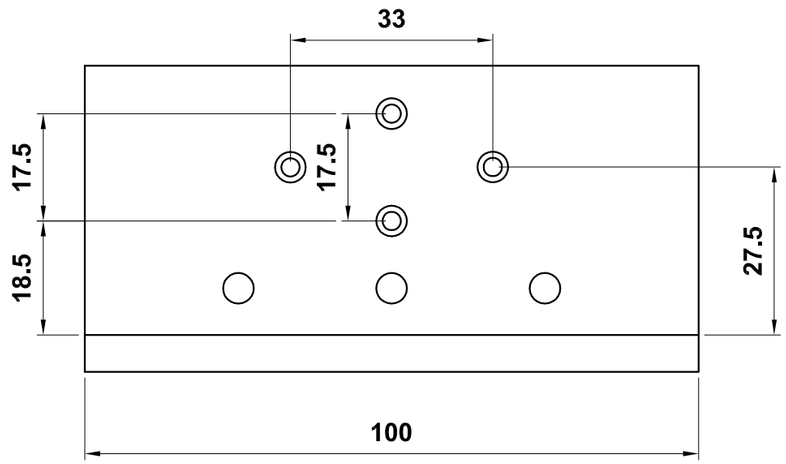

Do Not Scale From This Drawing

Cockspur Locking

Reversible Window

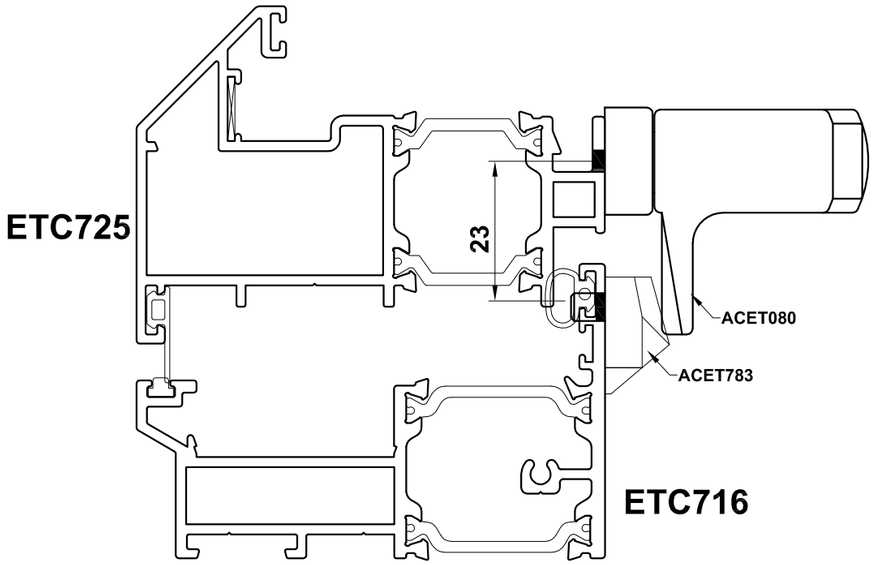

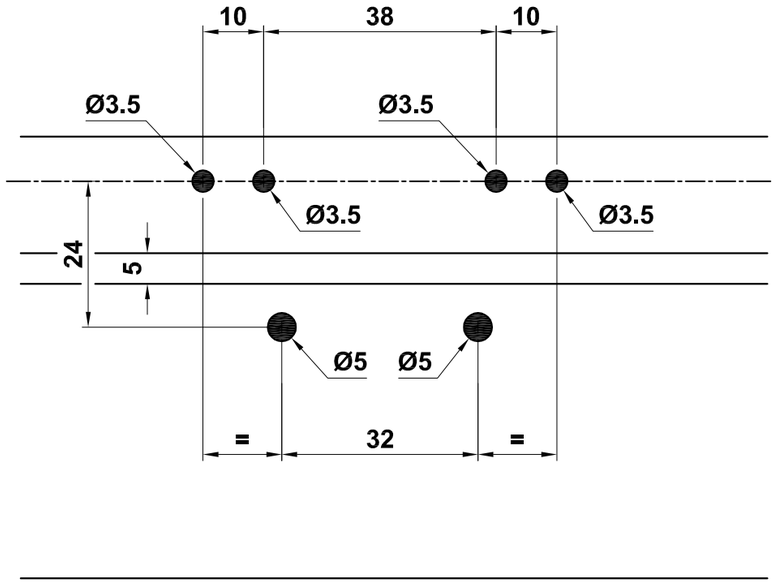

Do Not Scale From This Drawing

Glazing Details

Reversible Window

24mm Glazing

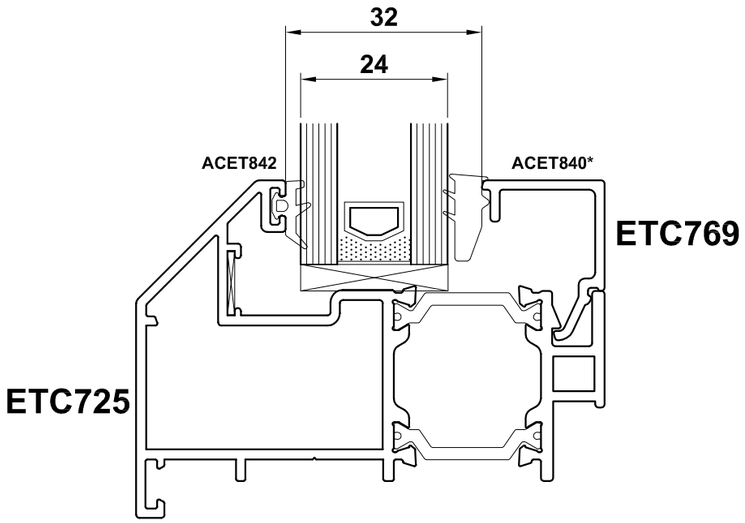

28mm Glazing

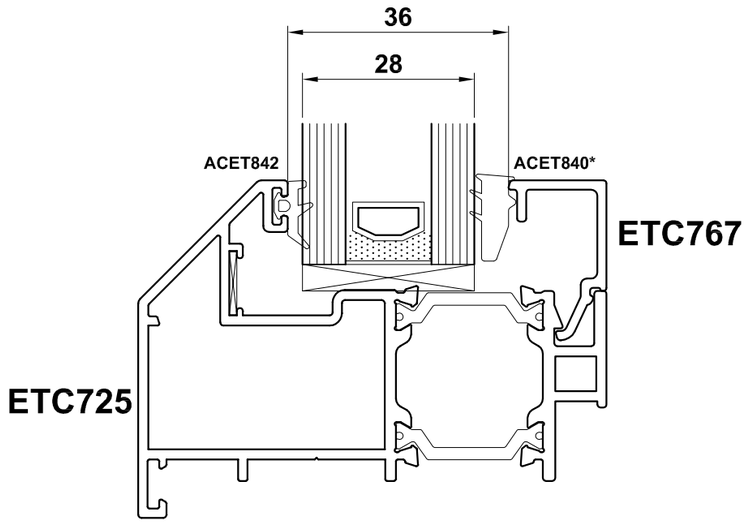

36mm Glazing

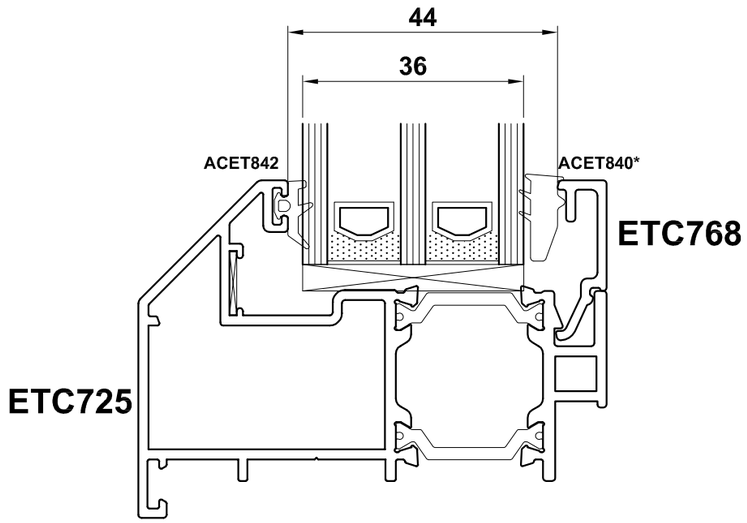

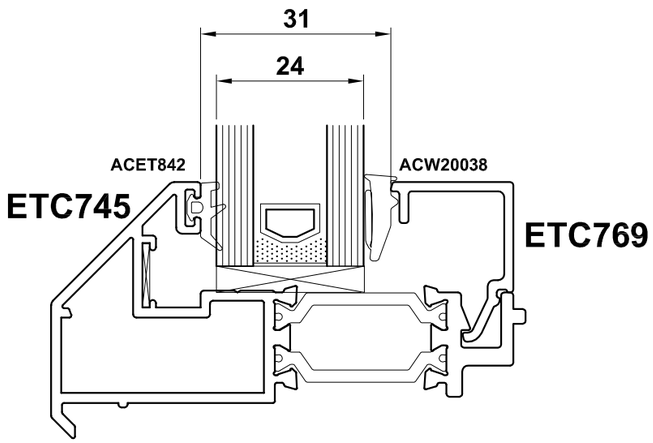

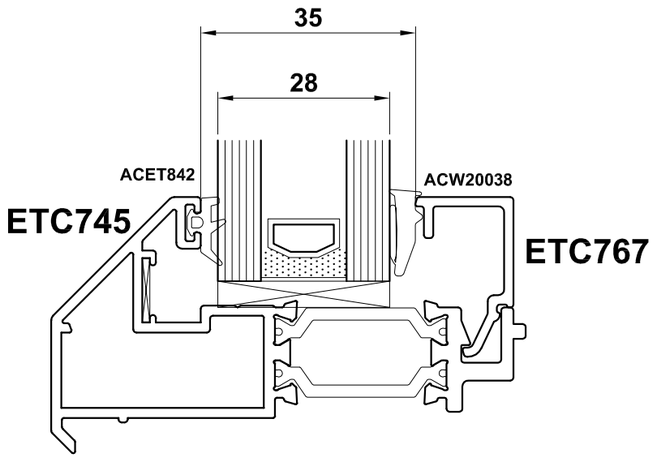

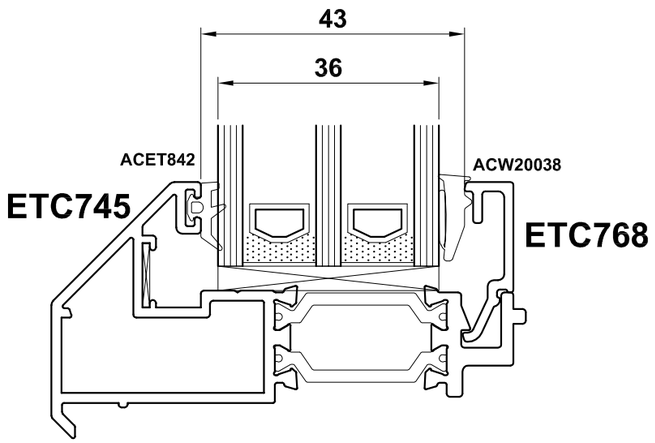

***Note:**
Where laminated units are used, consider using ACW20038 wedge

Do Not Scale From This Drawing

ETC770 & ETC771 — Reversible Window

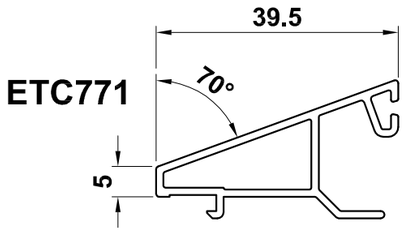

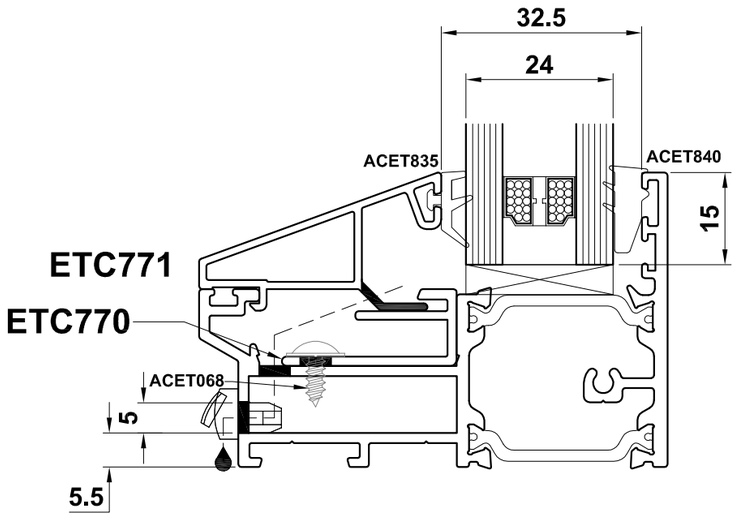

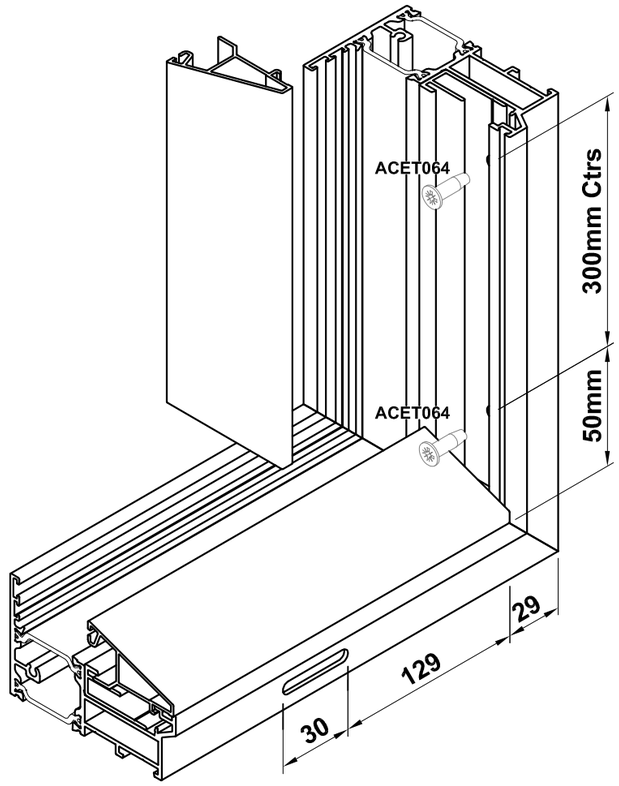

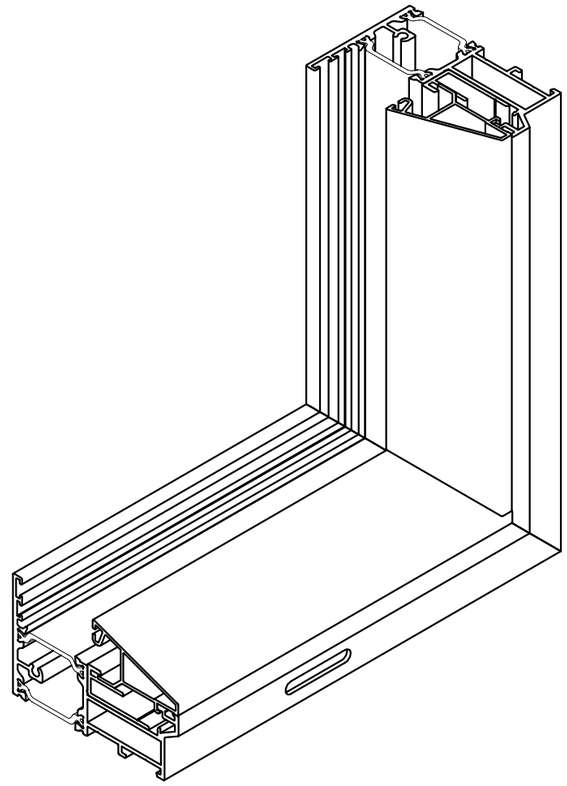

Do Not Scale From This Drawing

Fixing Strap Details

Reversible Window

Alternative Fixing Strap for ETC716

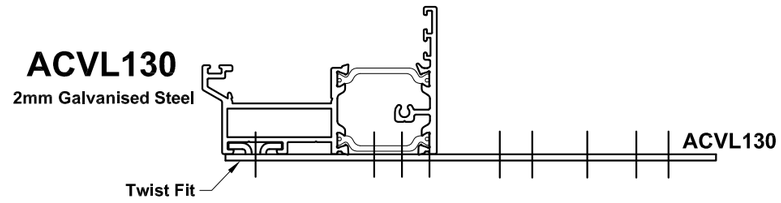

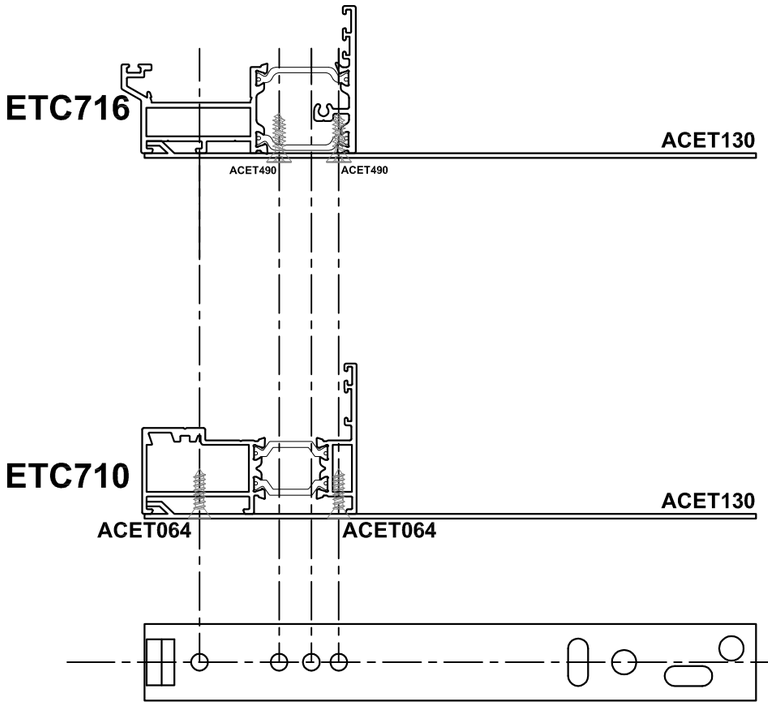

NOTE:
Fixing straps should be spaced a minimum of 150mm in from each end & at a maximum of 600mm apart.

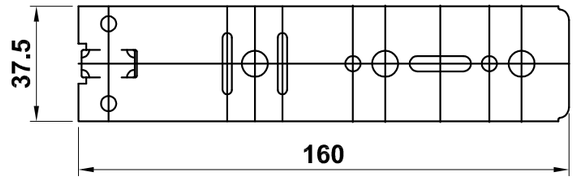

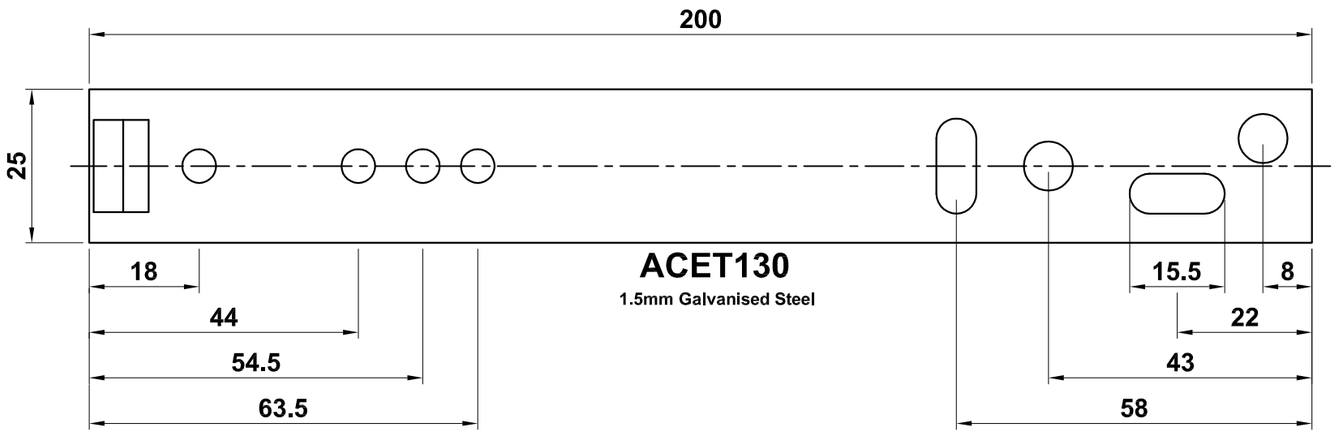

Do Not Scale From This Drawing

Section F

Sawing Tables

Parallel/Casement F03 - F08
Reversible F09 - F10

Cutting Information

Parallel & Casement Window

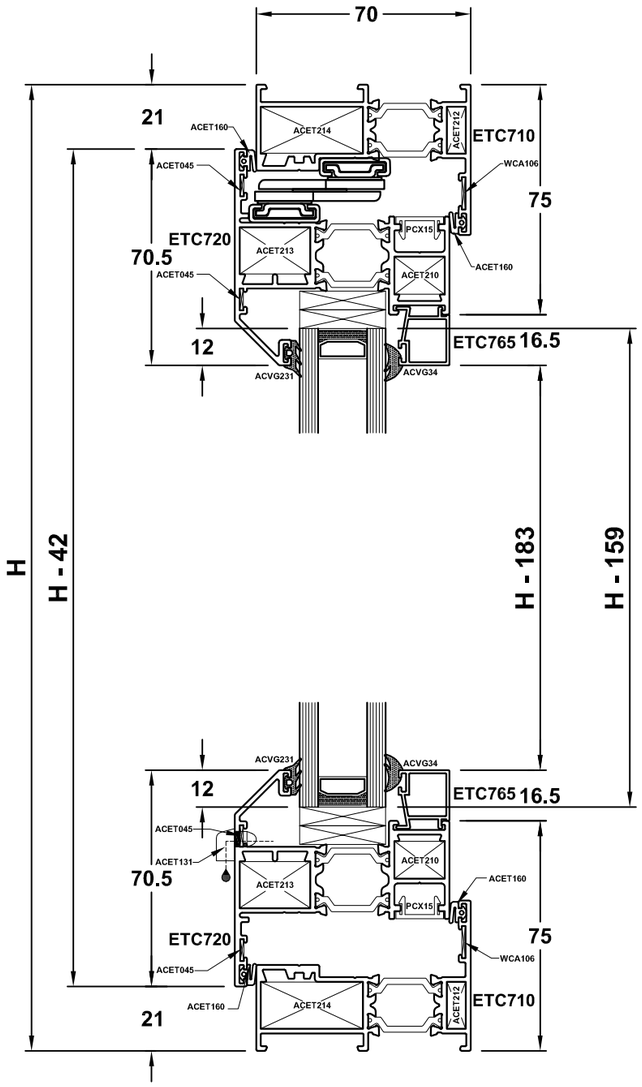

Profile Cutting Schedule

Part No.	Detail	QTY	Cutting Angle	Size
ETC710		2		W
ETC710		2		H
ETC720		2		W-42
ETC720		2		H-42
ETC765		2		W-150
ETC765		2		H-183

Glass Size

W-159 x H-159

Accessories

Part No.	Size	QTY	Description
ACET212	-	4	O/F Corner Cleat
ACET214	-	4	O/F Corner Cleat
WCA106	-	4	O/F Corner Chevron
ACET213	-	4	Sash Corner Cleat
ACET210	-	4	Sash Corner Cleat
ACET045	-	8	Sash Corner Chevron
PCX15	W-86	2	Sash PVC Infill
PCX15	H-86	2	Sash PVC Infill
ACET160	W-42	2	Sash Gasket
ACET160	H-42	2	Sash Gasket
ACET160	W-86	2	Sash Gasket
ACET160	H-86	2	Sash Gasket
ACET131	-	2	Drainage Cap

Parallel Window Accessories

Part No.	Size	QTY	Description
ACET165		1 Left 1 Right	Handle
ACET069		4	Handle Fixing Screws
ACET710		2	Basic Locking Kit
ACET71*		4	Locking Rods
ACETPPS**		1	Control Stay
ACETPPS**		1 Pair	Side Stays
ACETPPS**		1 Pair	150mm Restrictor
ACET068		18 (min)	Hinge Screws
ACET060		18 (min)	Lock/Keep Screws

Casement Window Accessories

Part No.	Size	QTY	Description
ACET165		1	Handle
ACET069		4	Handle Fixing Screws
ACET710		1	Basic Locking Kit
ACET71*		2	Locking Rods
ACINS1*		2	Stays
ACET068		12 (min)	Hinge Screws
ACET060		18 (min)	Lock/Keep Screws

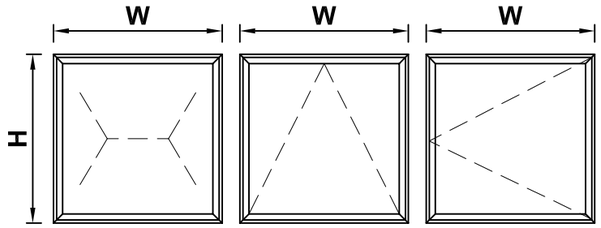

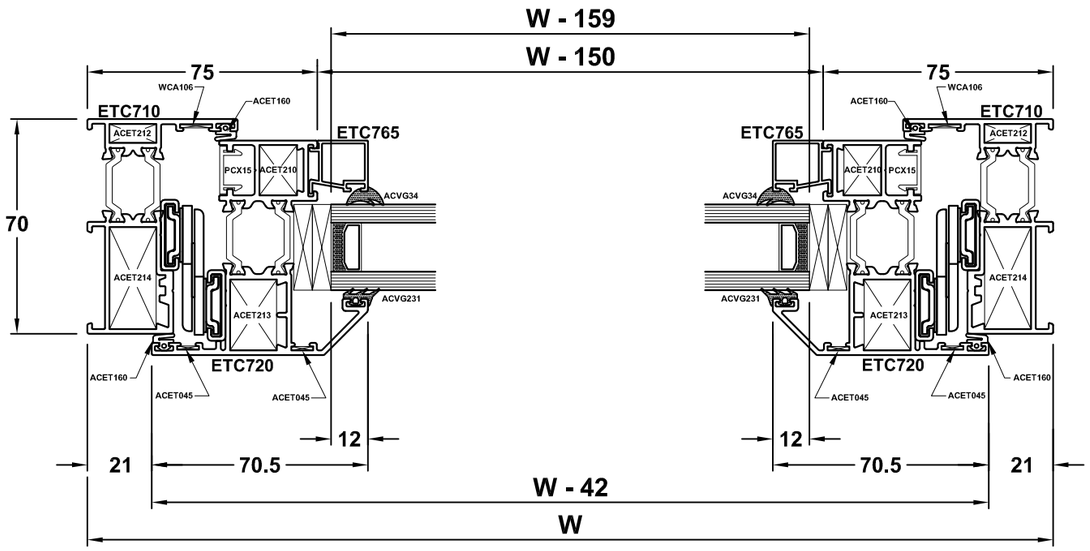

Do Not Scale From This Drawing

Cutting Information

Parallel & Casement Window

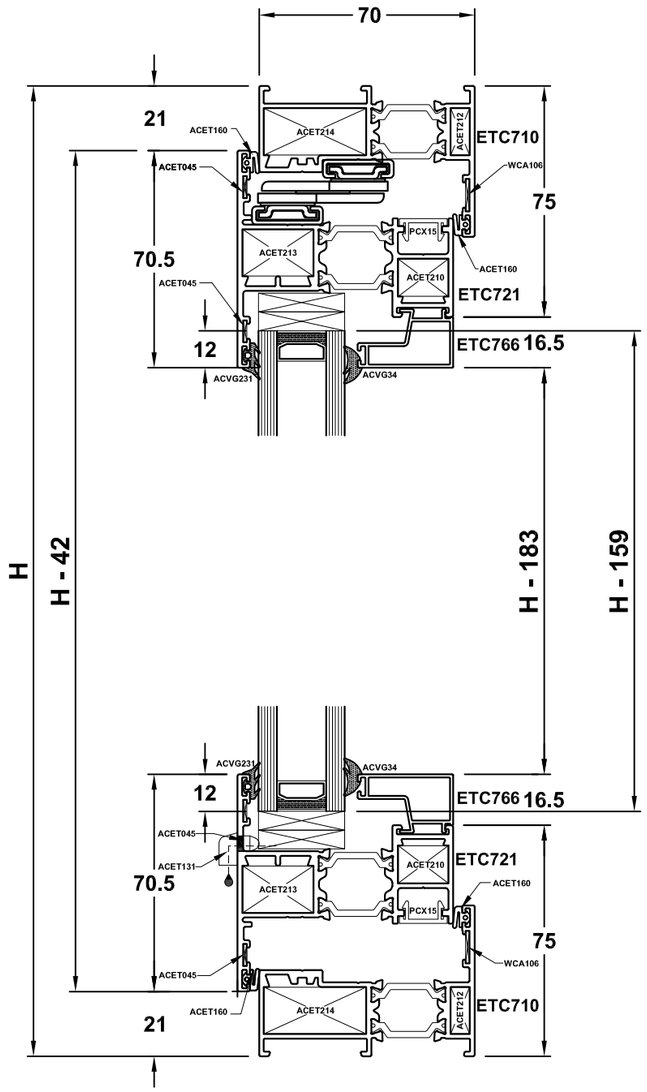

Profile Cutting Schedule

Part No.	Detail	QTY	Cutting Angle	Size
ETC710		2		W
ETC710		2		H
ETC721		2		W-42
ETC721		2		H-42
ETC766		2		W-150
ETC766		2		H-183

Glass Size

W-159 x H-159

Accessories

Part No.	Size	QTY	Description
ACET212	-	4	O/F Corner Cleat
ACET214	-	4	O/F Corner Cleat
WCA106	-	4	O/F Corner Chevron
ACET213	-	4	Sash Corner Cleat
ACET210	-	4	Sash Corner Cleat
ACET045	-	8	Sash Corner Chevron
PCX15	W-86	2	Sash PVC Infill
PCX15	H-86	2	Sash PVC Infill
ACET160	W-42	2	Sash Gasket
ACET160	H-42	2	Sash Gasket
ACET160	W-86	2	Sash Gasket
ACET160	H-86	2	Sash Gasket
ACET131	-	2	Drainage Cap

Parallel Window Accessories

Part No.	Size	QTY	Description
ACET165		1 Left 1 Right	Handle
ACET069		4	Handle Fixing Screws
ACET710		2	Basic Locking Kit
ACET71*		4	Locking Rods
ACETPPS**		1	Control Stay
ACETPPS**		1 Pair	Side Stays
ACETPPS**		1 Pair	150mm Restrictor
ACET068		18 (min)	Hinge Screws
ACET060		18 (min)	Lock/Keep Screws

Casement Window Accessories

Part No.	Size	QTY	Description
ACET165		1	Handle
ACET069		4	Handle Fixing Screws
ACET710		1	Basic Locking Kit
ACET71*		2	Locking Rods
ACINS1*		2	Stays
ACET068		12 (min)	Hinge Screws
ACET060		18 (min)	Lock/Keep Screws

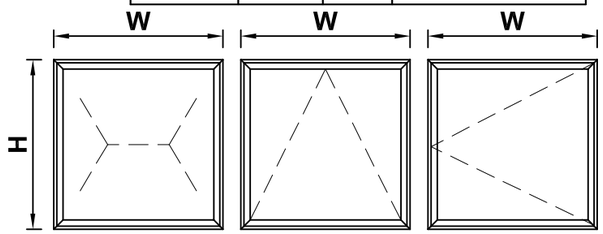

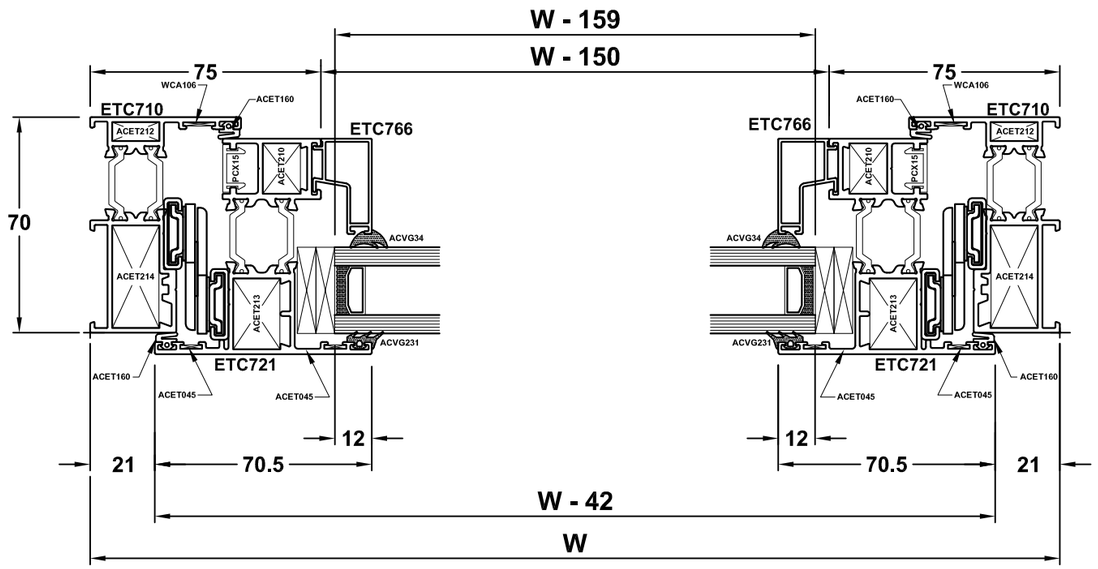

Do Not Scale From This Drawing

Cutting Information

Parallel & Casement Window

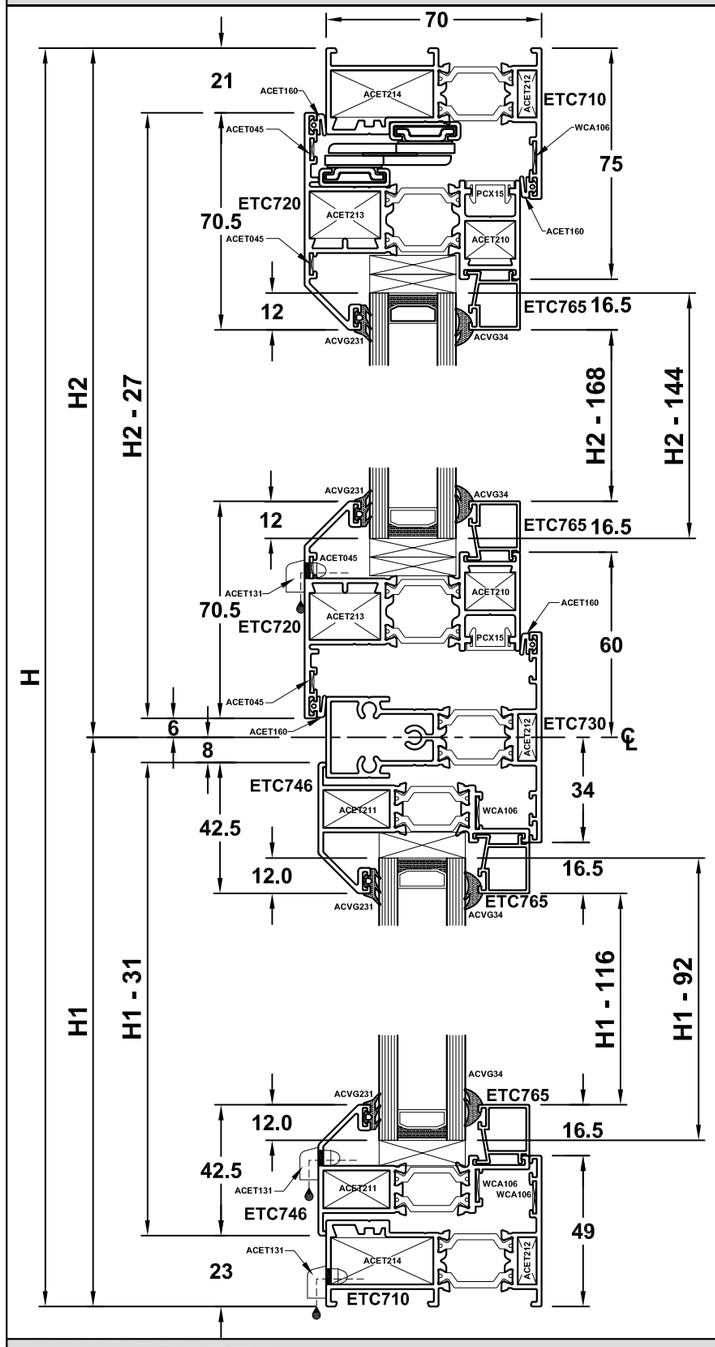

Profile Cutting Schedule

Part No.	Detail	QTY	Cutting Angle	Size
ETC710		2		W
ETC710		2		H
ETC720		2		W-42
ETC720		2		H2 - 27
ETC730		1		W-150
ETC746		2		W - 46
ETC746		2		H1 - 31
ETC765		2		W-150
ETC765		2		H2-168
ETC765		2		W-98
ETC765		2		H1-116

Glass Size

H1	W-108 x H1-92
H2	W-159 x H2-144

Parallel Window Accessories

Part No.	Size	QTY	Description
ACET165		1 Left 1 Right	Handle
ACET069		4	Handle Fixing Screws
ACET710		2	Basic Locking Kit
ACET71*		4	Locking Rods
ACETPPS**		1	Control Stay
ACETPPS**		1 Pair	Side Stays
ACETPPS**		1 Pair	150mm Restrictor
ACET068		18 (min)	Hinge Screws
ACET060		18 (min)	Lock/Keep Screws
ACET746		4 (min)	ETC746 Fixing Packer

Accessories

Part No.	Size	QTY	Description
ACET211	-	4	ETC746 Corner Cleat
ACET212	-	4	ETC710 Corner Cleat
ACET214	-	4	ETC710 Corner Cleat
WCA106	-	8	ETC710/746 Chevron
ACET213	-	4	ETC720 Corner Cleat
ACET210	-	4	ETC720 Corner Cleat
ACET215	-	4	ETC730 Fixing Packer
ACET045	-	8	ETC720 Chevron
PCX15	W-86	2	ETC720 PVC Infill
PCX15	H-86	2	ETC720 PVC Infill
ACET160	W-42	2	ETC720 Gasket
ACET160	H-42	2	ETC720 Gasket
ACET160	W-86	2	ETC710 Gasket
ACET160	H-86	2	ETC710 Gasket
ACET131	-	6	Drainage Cap
ACDR052	-	6	ETC730 Screws
ACET066	-	8 (min)	ETC746 Screws

Casement Window Accessories

Part No.	Size	QTY	Description
ACET165		1	Handle
ACET069		4	Handle Fixing Screws
ACET710		1	Basic Locking Kit
ACET71*		2	Locking Rods
ACINS1*		2	Stays
ACET068		12 (min)	Hinge Screws
ACET060		18 (min)	Lock/Keep Screws

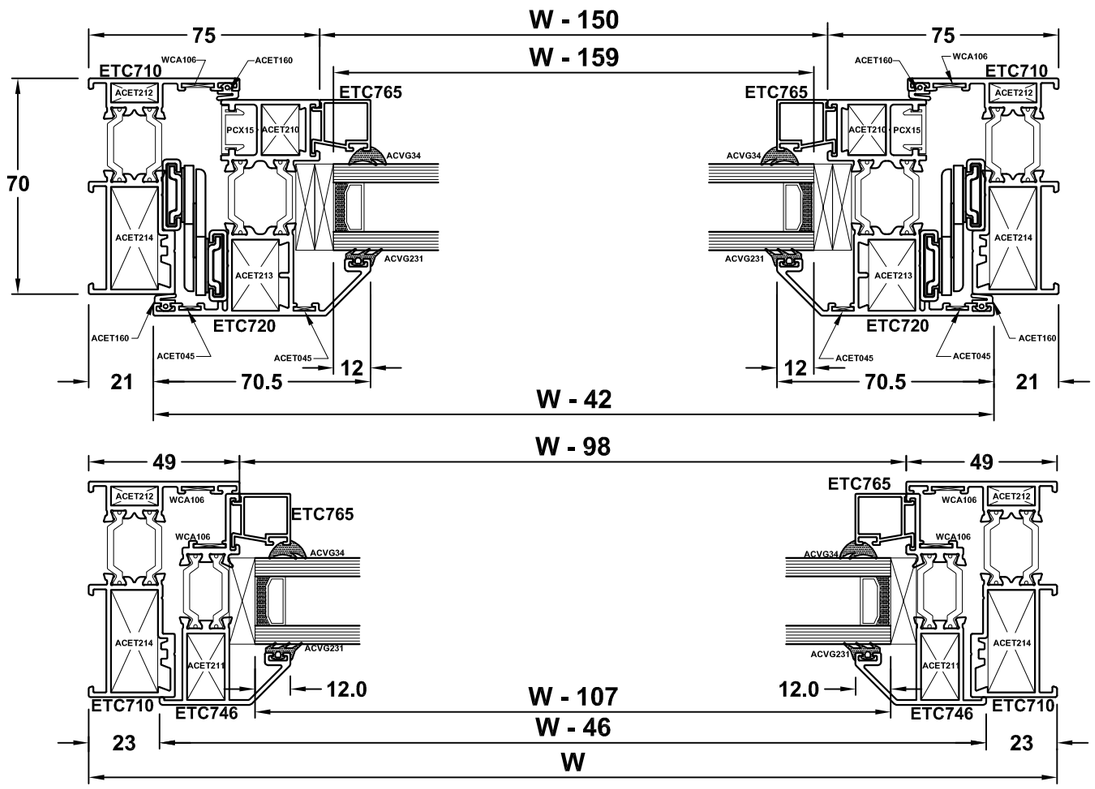

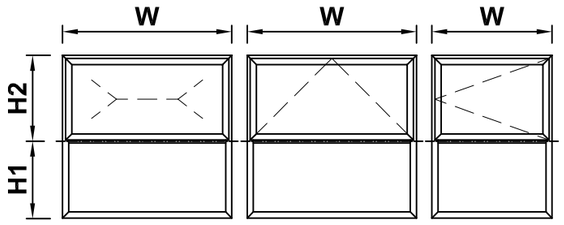

Do Not Scale From This Drawing

Cutting Information

Parallel & Casement Window

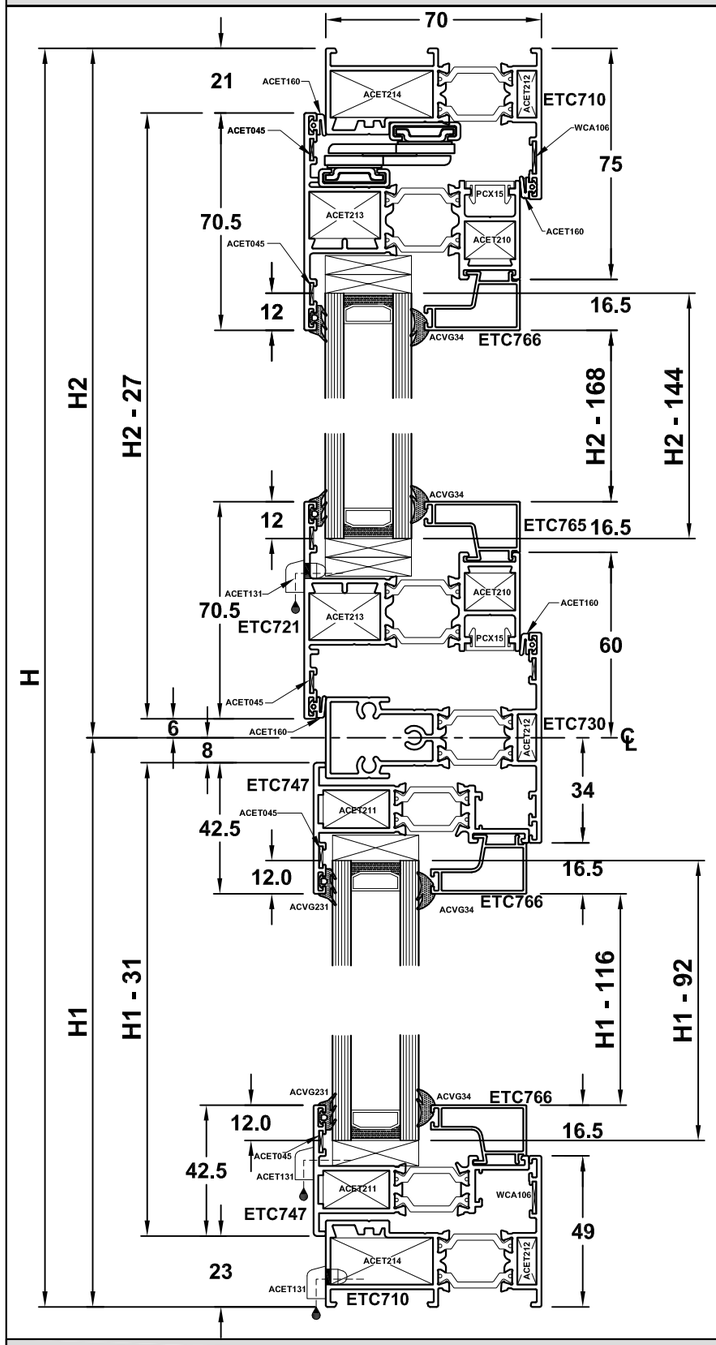

Profile Cutting Schedule

Part No.	Detail	QTY	Cutting Angle	Size
ETC710		2		W
ETC710		2		H
ETC721		2		W-42
ETC721		2		H2 - 27
ETC730		1		W-150
ETC747		2		W - 46
ETC747		2		H1 - 31
ETC766		2		W-150
ETC766		2		H2-168
ETC766		2		W-98
ETC766		2		H1-116

Glass Size

H1	W-108 x H1-92
H2	W-159 x H2-144

Parallel Window Accessories

Part No.	Size	QTY	Description
ACET165		1 Left 1 Right	Handle
ACET069		4	Handle Fixing Screws
ACET710		2	Basic Locking Kit
ACET71*		4	Locking Rods
ACETPPS**		1	Control Stay
ACETPPS**		1 Pair	Side Stays
ACETPPS**		1 Pair	150mm Restrictor
ACET068		18 (min)	Hinge Screws
ACET060		18 (min)	Lock/Keep Screws

Accessories

Part No.	Size	QTY	Description
ACET211	-	4	ETC746 Corner Cleat
ACET212	-	4	ETC710 Corner Cleat
ACET214	-	4	ETC710 Corner Cleat
WCA106	-	8	ETC710/746 Chevron
ACET213	-	4	ETC720 Corner Cleat
ACET210	-	4	ETC720 Corner Cleat
ACET215	-	4	ETC730 Fixing Packer
ACET045	-	8	ETC720 Chevron
PCX15	W-86	2	ETC720 PVC Infill
PCX15	H-86	2	ETC720 PVC Infill
ACET160	W-42	2	ETC720 Gasket
ACET160	H-42	2	ETC720 Gasket
ACET160	W-86	2	ETC710 Gasket
ACET160	H-86	2	ETC710 Gasket
ACET131	-	6	Drainage Cap
ACDR052	-	6	ETC730 Screws
ACET066	-	8 (min)	ETC746 Screws

Casement Window Accessories

Part No.	Size	QTY	Description
ACET165		1	Handle
ACET069		4	Handle Fixing Screws
ACET710		1	Basic Locking Kit
ACET71*		2	Locking Rods
ACINS1*		2	Stays
ACET068		12 (min)	Hinge Screws
ACET060		18 (min)	Lock/Keep Screws

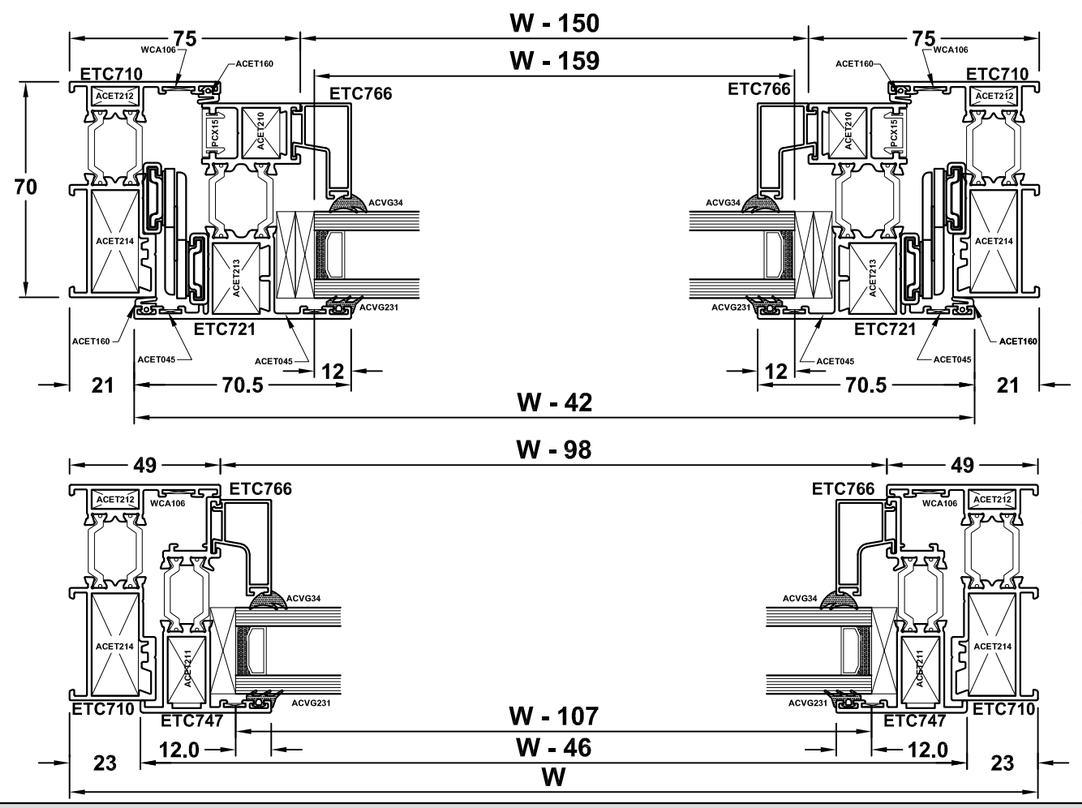

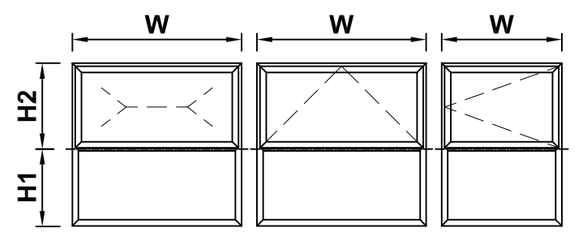

Do Not Scale From This Drawing

Cutting Information

Parallel & Casement Window

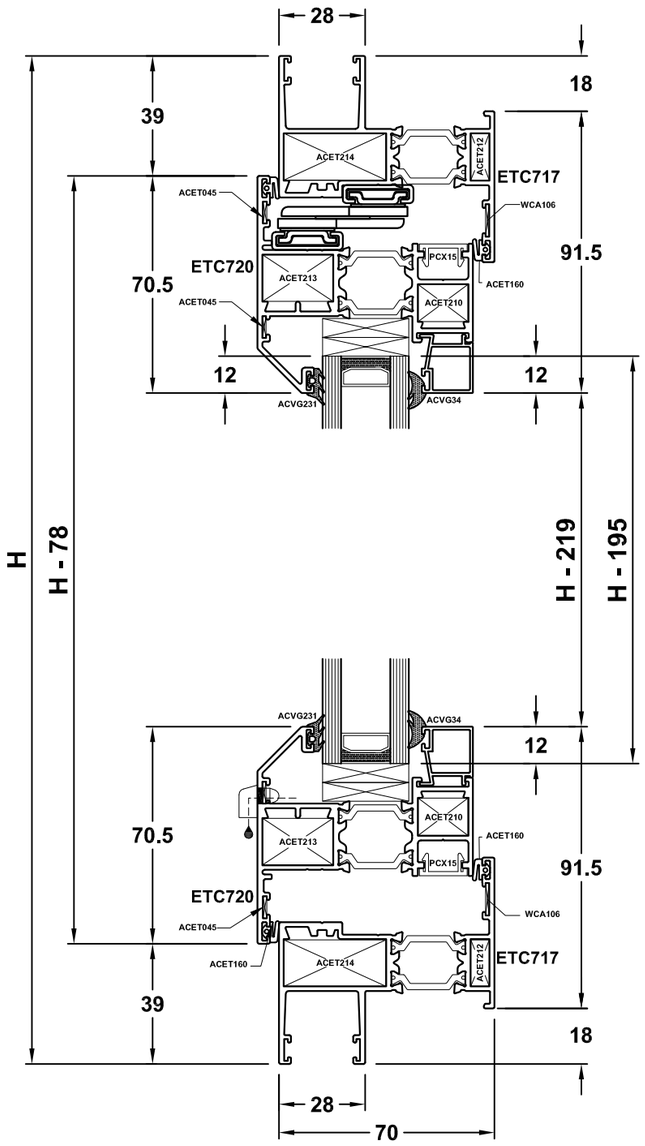

Profile Cutting Schedule

Part No.	Detail	QTY	Cutting Angle	Size
ETC717		2		W
ETC717		2		H
ETC721		2		W-78
ETC721		2		H-78
ETC766		2		W-186
ETC766		2		H-219

Glass Size

W-195 x H-195

Accessories

Part No.	Size	QTY	Description
ACET212	-	4	O/F Corner Cleat
ACET214	-	4	O/F Corner Cleat
WCA106	-	4	O/F Corner Chevron
ACET213	-	4	Sash Corner Cleat
ACET210	-	4	Sash Corner Cleat
ACET045	-	8	Sash Corner Chevron
PCX15	W-126	2	Sash PVC Infill
PCX15	H-126	2	Sash PVC Infill
ACET160	W-78	2	Sash Gasket
ACET160	H-78	2	Sash Gasket
ACET160	W-126	2	Sash Gasket
ACET160	H-126	2	Sash Gasket
ACET131	-	2	Drainage Cap

Parallel Window Accessories

Part No.	Size	QTY	Description
ACET165		1 Left 1 Right	Handle
ACET710		2	Basic Locking Kit
ACET71*		4	Locking Rods
ACETPPS**		1	Control Stay
ACETPPS**		1 Pair	Side Stays

Casement Window Accessories

Part No.	Size	QTY	Description
ACET165		1	Handle
ACET710		1	Basic Locking Kit
ACET71*		2	Locking Rods
ACINS1*		2	Stays

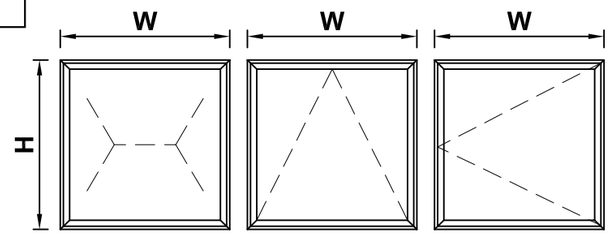

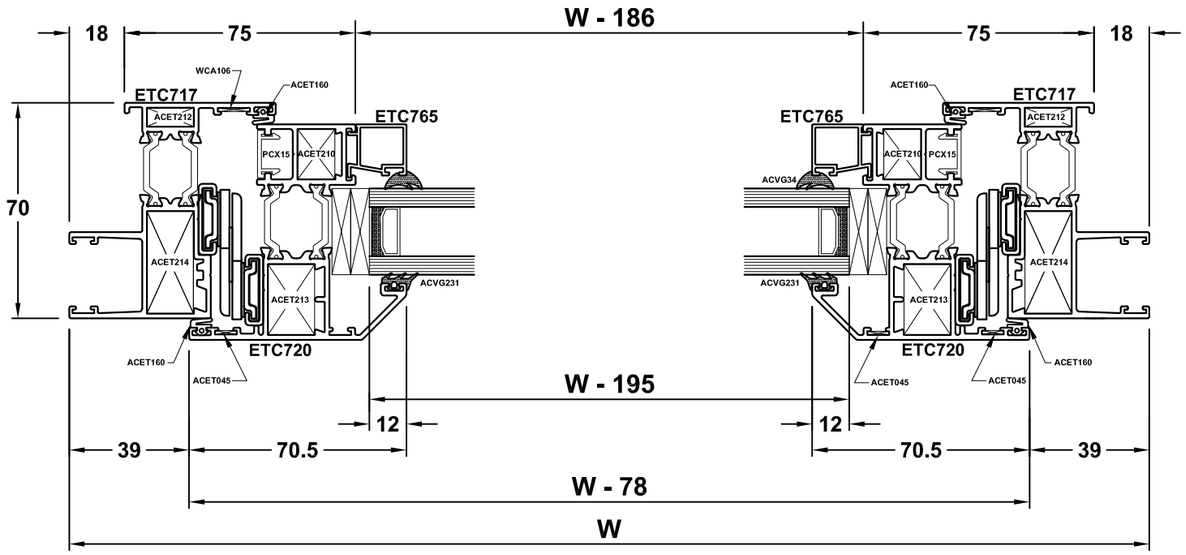

Do Not Scale From This Drawing

Cutting Information

Parallel & Casement Window

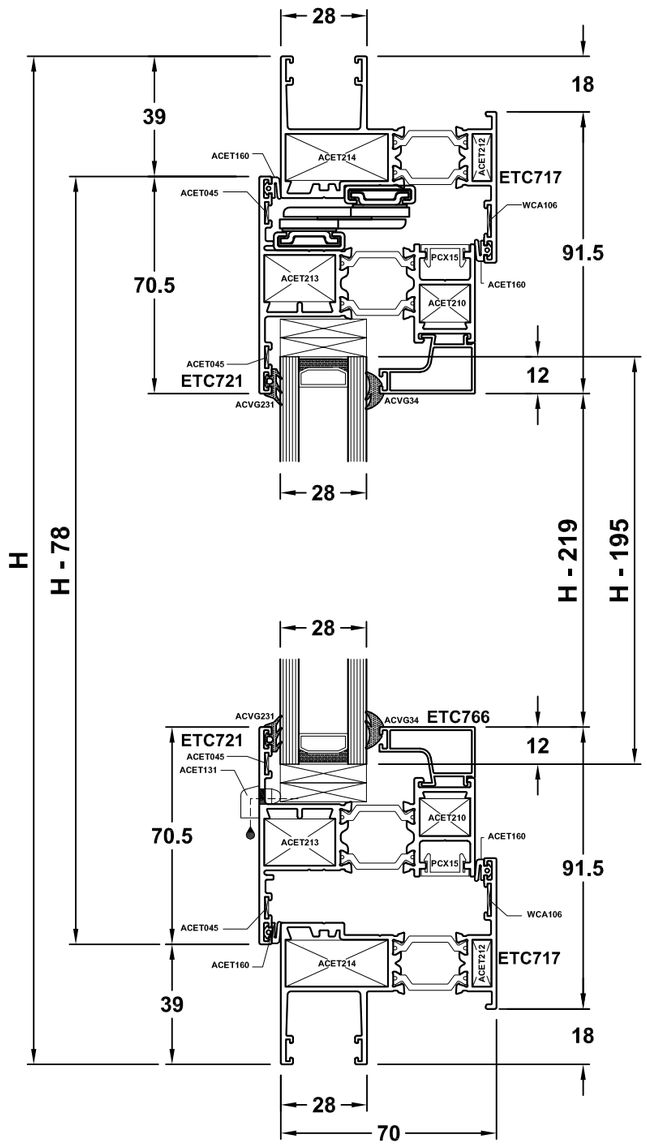

Profile Cutting Schedule

Part No.	Detail	QTY	Cutting Angle	Size
ETC717		2		W
ETC717		2		H
ETC721		2		W-78
ETC721		2		H-78
ETC766		2		W-186
ETC766		2		H-219

Glass Size

W-195 x H-195

Accessories

Part No.	Size	QTY	Description
ACET212	-	4	O/F Corner Cleat
ACET214	-	4	O/F Corner Cleat
WCA106	-	4	O/F Corner Chevron
ACET213	-	4	Sash Corner Cleat
ACET210	-	4	Sash Corner Cleat
ACET045	-	8	Sash Corner Chevron
PCX15	W-126	2	Sash PVC Infill
PCX15	H-126	2	Sash PVC Infill
ACET160	W-78	2	Sash Gasket
ACET160	H-78	2	Sash Gasket
ACET160	W-126	2	Sash Gasket
ACET160	H-126	2	Sash Gasket
ACET131	-	2	Drainage Cap

Parallel Window Accessories

Part No.	Size	QTY	Description
ACET165		1 Left 1 Right	Handle
ACET069		4	Handle Fixing Screws
ACET710		2	Basic Locking Kit
ACET71*		4	Locking Rods
ACETPPS**		1	Control Stay
ACETPPS**		1 Pair	Side Stays
ACETPPS**		1 Pair	150mm Restrictor
ACET068		18 (min)	Hinge Screws
ACET060		18 (min)	Lock/Keep Screws

Casement Window Accessories

Part No.	Size	QTY	Description
ACET165		1	Handle
ACET069		4	Handle Fixing Screws
ACET710		1	Basic Locking Kit
ACET71*		2	Locking Rods
ACINS1*		2	Stays
ACET068		12 (min)	Hinge Screws
ACET060		18 (min)	Lock/Keep Screws

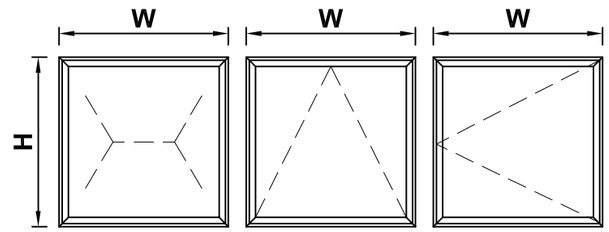

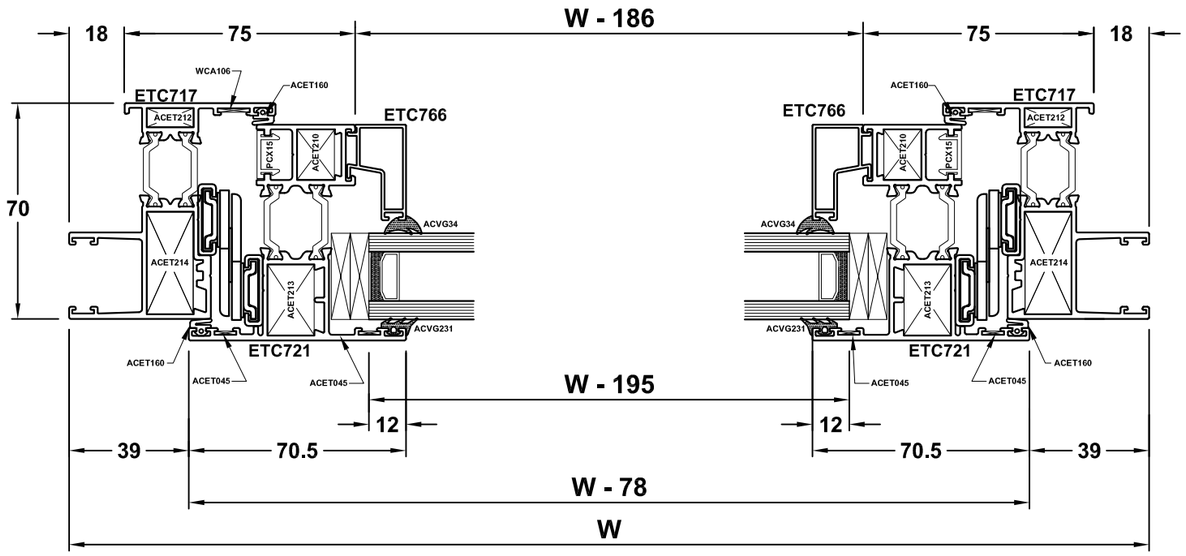

Do Not Scale From This Drawing

Cutting Information

Reversible

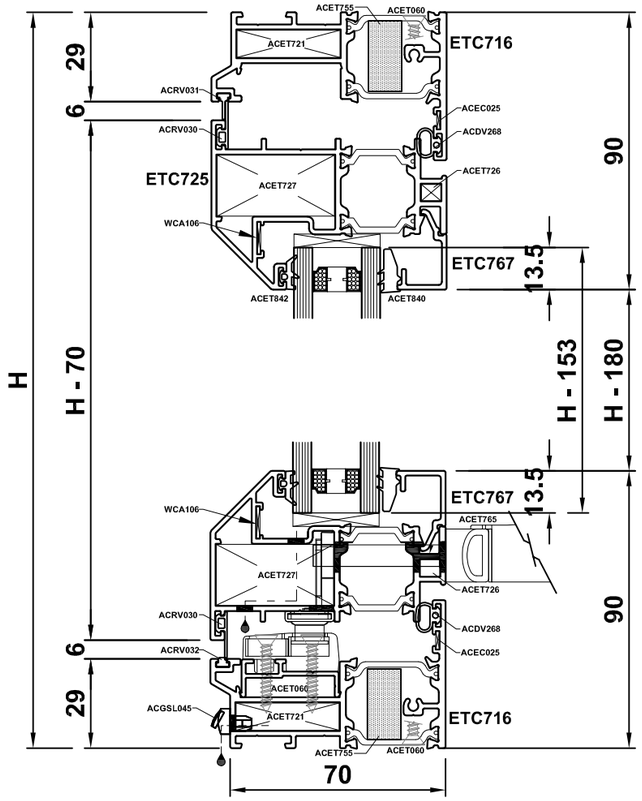

Profile Cutting Schedule

Part No.	Detail	QTY	Cutting Angle	Size
ETC716		2		W
ETC716		2		H
ETC725		2		W-70
ETC725		2		H-70
ETC767		2		W-144
ETC767		2		H-180
ETC775		1		W-58

Glass Size

W-153 x H-153

Accessories From Smart Systems

Part No.	Size	QTY	Description
ACDV268	W-82	2	Flipper Gasket
ACDV268	H-82	2	Flipper Gasket
ACEC025	-	4	Corner Chevron
ACET060	-	4	Corner Screws
ACET067	-	12 approx	Hinge Screws
ACET721	-	4	ETC716 Corner Cleat
ACET727	-	4	ETC725 Corner Cleat
ACET726	-	4	ETC725 Corner Cleat
ACET755	(2xW)+(2xH)		Foam Insulation
ACET840	W-153	2	Wedge Glazing Gasket
ACET840	H-153	2	Wedge Glazing Gasket
ACET842	W-153	2	'E' Glazing Gasket
ACET842	H-153	2	'E' Glazing Gasket
ACGSL045	-	2	Drainage Cap
ACRV030	W-70	2	Sash Gasket
ACRV030	H-70	2	Sash Gasket
ACRV031	W-58	1	Head Gasket
ACRV032	W-58	1	Cill Gasket
ACRV032	H-58	2	Jamb Gasket
WCA106	-	4	Corner Chevron

Reverse Espag Locking

ACET77*	-	1	Reverse Espag Rod
ACET765	-	1	Espag Handle

Accessories from VBH

Part No.	Size	QTY	Description
2AST00*	-	1 Pair	Reversible Hinges
2AST0011	-	1 Pair	Top Glider
2AST0012	-	1 Pair	Centre Bracket
2CEG025*	-	1	48mm Tongue Hangle
INE0002-07	-	1	Centre Lock
2WES0336	-	2 - 4	Keeps

Optional Accessories from VBH

2AST0014	-	2	Stop Block
2AST0017	-	2	Guide Block
2AST0029	-	2	Blocking Device

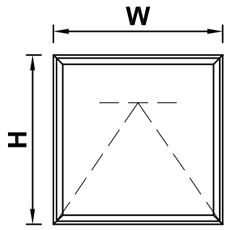

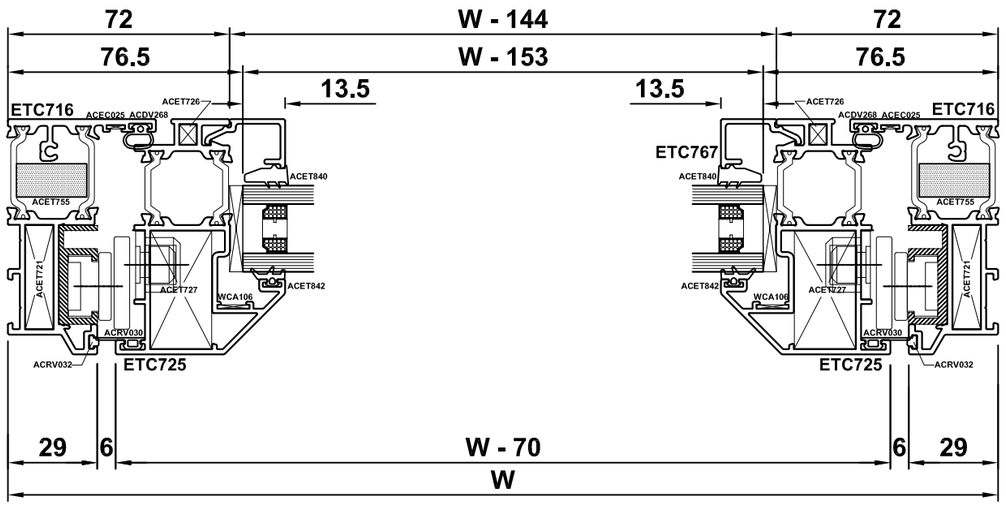

Do Not Scale From This Drawing

Cutting Information

Reversible

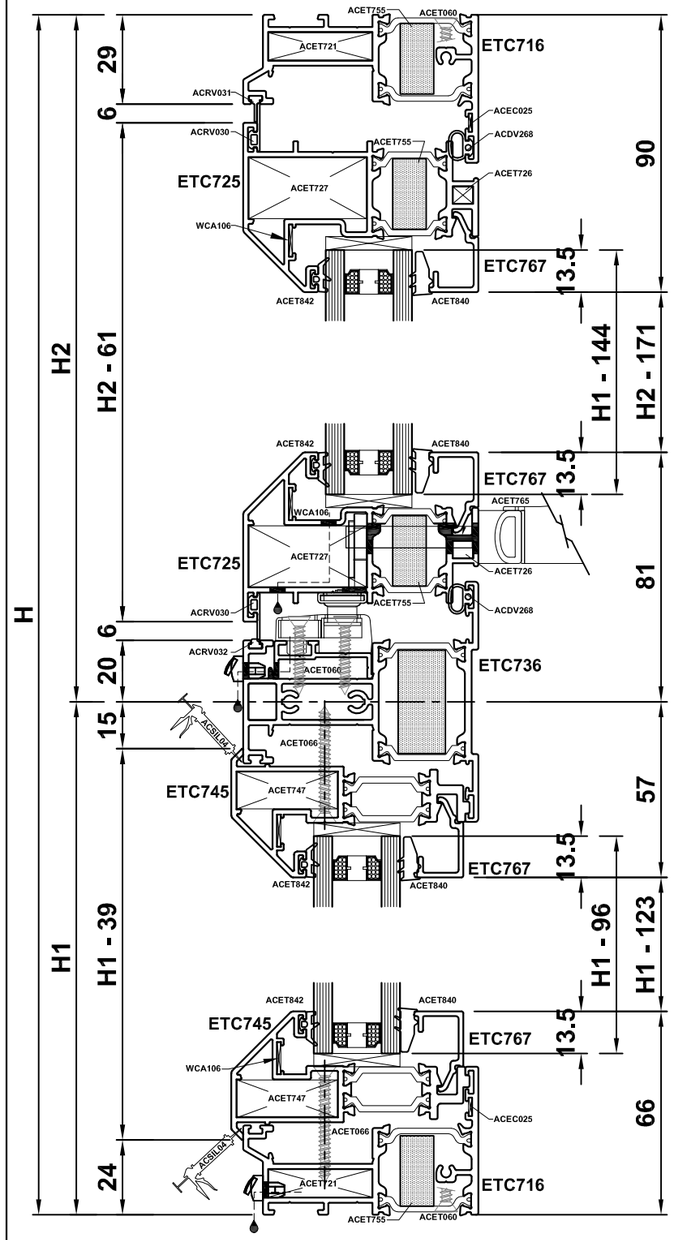

Profile Cutting Schedule

Part No.	Detail	QTY	Cutting Angle	Size
ETC716		2		W
ETC716		2		H
ETC725		2		W-70
ETC725		2		H2-61
ETC736		1		W-58
ETC745		2		W-48
ETC745		2		H1-39
ETC767		2		W-96
ETC767		2		H1-123
ETC767		2		W-144
ETC767		2		H2-171
ETC775		1		W-58

Glass Size

H1	W-105 x H1-96
H2	W-153 x H2-144

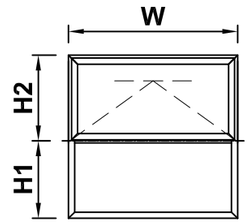

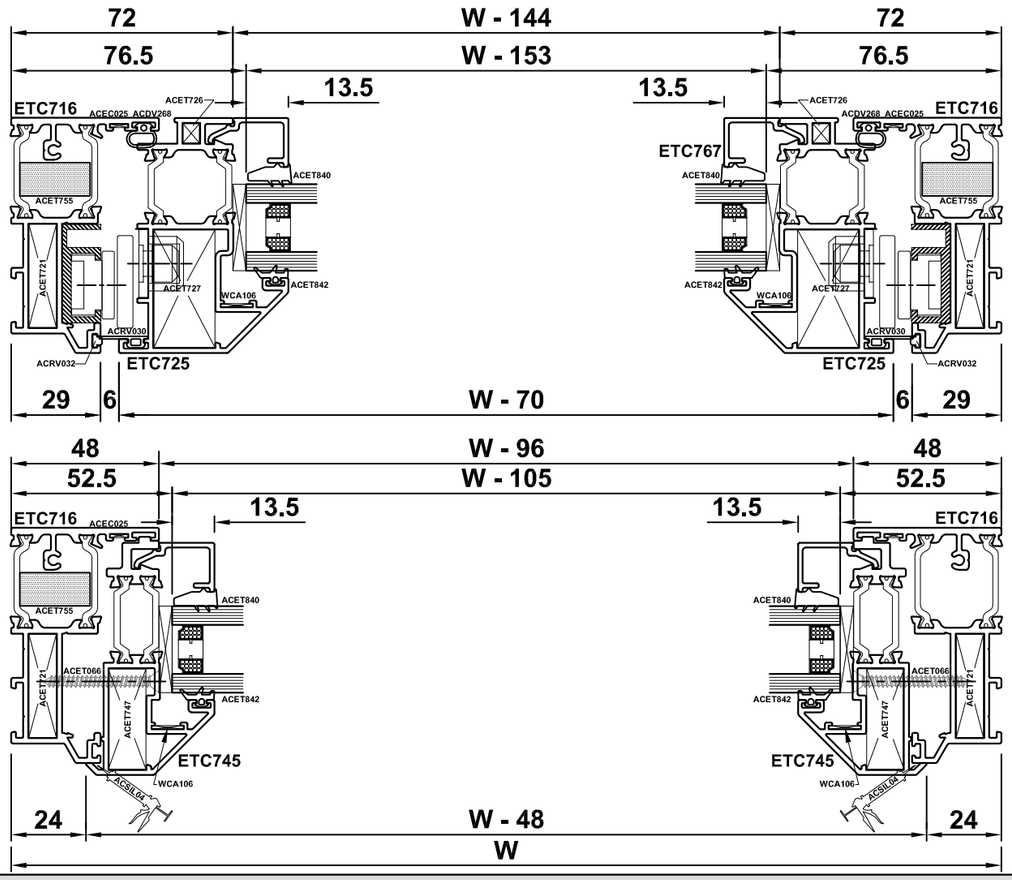

Accessories From Smart Systems

Part No.	Size	QTY	Description
ACDV268	H-58	2	Jamb Gasket
ACDV268	W-82	2	Flipper Gasket
ACEC025	-	4	Corner Chevron
ACET060	-	4	Corner Screw
ACET062	-	4	ETC736 Screws
ACET066	-	8 for corners & at 300mm centres	ACET747 Screws
ACET067	-	12 approx	Hinge Screws
ACET720	-	4	ETC716 Corner Cleat
ACET727	-	4	ETC725 Corner Cleat
ACET726	-	4	ETC725 Corner Cleat
ACET747	-	4	ETC745 Corner Cleat
ACET755	(2xW)+(2xH)		Foam Insulation
ACET840	W-105	4	Wedge Glazing Gasket
ACET840	H1-102 H2-144	4	Wedge Glazing Gasket
ACET842	W-105	4	'E' Glazing Gasket
ACET842	H1-102 H2-144	4	'E' Glazing Gasket
ACGSL045	-	4	Drainage Cap
ACRV030	W-70	2	Sash Gasket
ACRV030	H2-70	2	Sash Gasket
ACRV031	W-58	1	Head Gasket
ACRV032	W-58	1	Cill Gasket
ACVL032	H-82	2	Flipper Gasket
WCA106	-	12	Corner Chevron

Reverse Espag Locking

ACET77*	-	1	Reverse Espag Rod
ACET765	-	1	Espag Handle

Accessories from VBH

Part No.	Size	QTY	Description
2AST00*	-	1 Pair	Reversible Hinges
2AST0011	-	1 Pair	Top Glider
2AST0012	-	1 Pair	Centre Bracket
2CEG025*	-	1	48mm Tongue Handle
INE0002-07	-	1	Centre Lock
2WES0336	-	2 - 4	Keeps

Optional Accessories from VBH

2AST0014	-	2	Stop Block
2AST0017	-	2	Guide Block
2AST0029	-	2	Blocking Device

Do Not Scale From This Drawing

Bulletin

New sub cills designed to allow an improved direct fixing & lug fixing detail.
ETC451, 452, 457, 458 & 479 offer the option of black or white PVC end caps, or cast end caps which may be powder coated to match.
ETC478 is a new 300mm sub cill for wider profiles with cast end caps.

	Number	Perim. mm	Mec. mm	Ix(cm4) wx(cm3)	Iy(cm4) wy(cm3)	Length	Pack pr.	MF	SA	KL	HP	M
New	ETC451	304	109	32.44 ----- 7.29	3.46 ----- 2.79	6.5	1	✓	✓	✓	✓	✓
New	ETC452	414	197	122.46 ----- 18.03	6.01 ----- 3.34	6.5	1	✓	✓	✓	✓	✓
New	ETC457	444	212	163.27 ----- 21.60	6.79 ----- 3.73	6.5	1	✓	✓	✓	✓	✓
New	ETC458	524	252	313.62 ----- 32.63	8.87 ----- 4.79	6.5	1	✓	✓	✓	✓	✓
New	ETC479	594	287	501.64 ----- 44.04	9.72 ----- 5.34	6.5	1	✓	✓	✓	✓	✓
Available Soon	ETC478	736	314	1410.74 ----- 87.73	16.30 ----- 8.62	5	1	✓	✓	✓	✓	✓

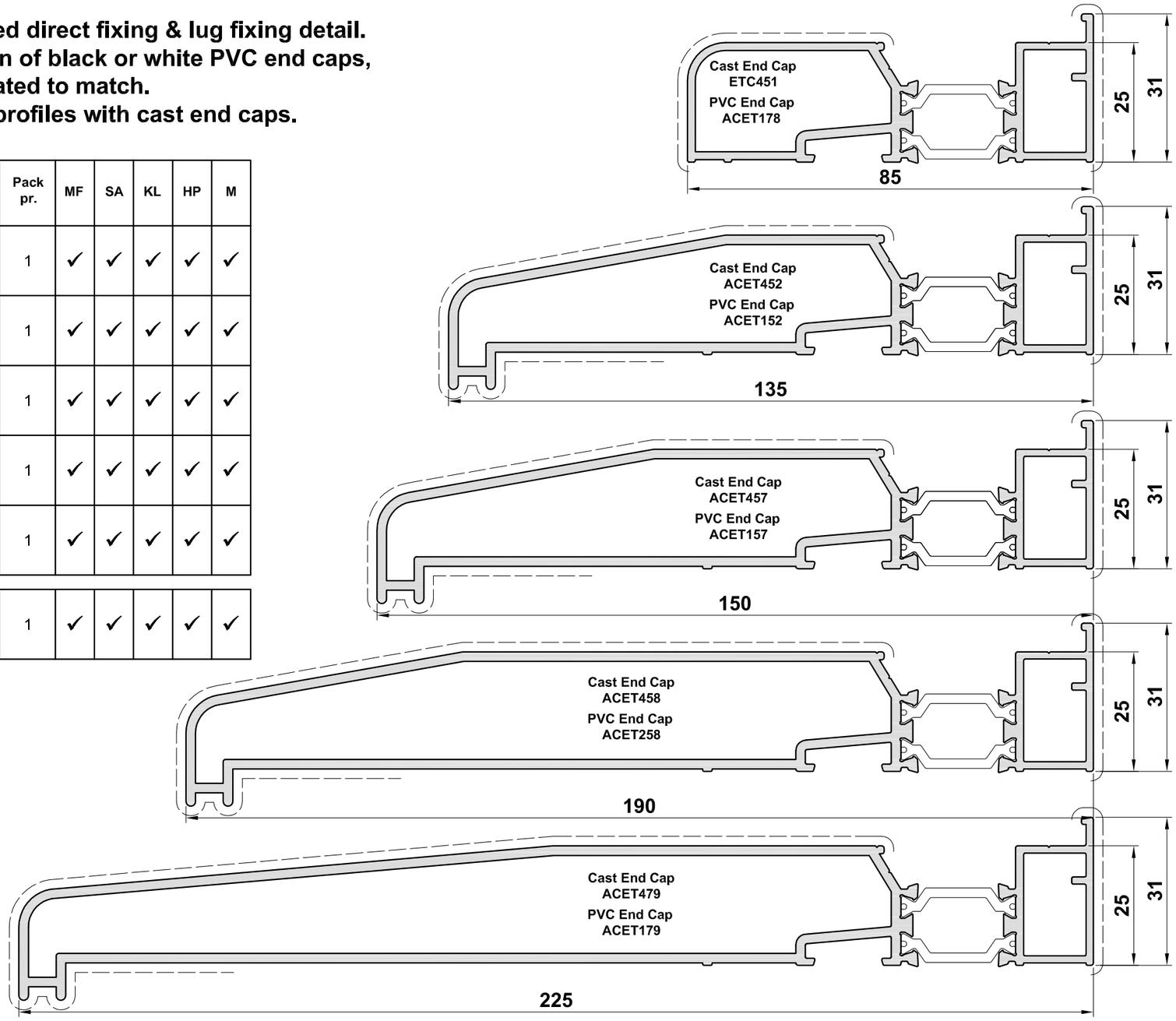

PVC End Caps

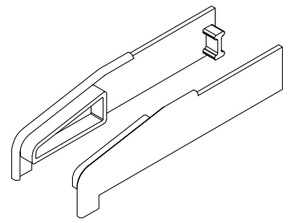	**ACET152** PVC Cill End Cap	10	pairs	ETC452	MF	
					KL	
					HP	
					W	✓
					Z	✓
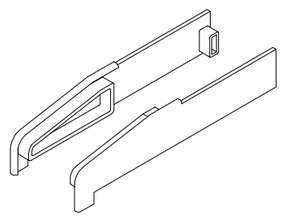	**ACET157** PVC Cill End Cap	10	pairs	ETC457	MF	
					KL	
					HP	
					W	✓
					Z	✓
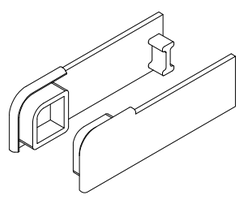	**ACET178** PVC Cill End Cap	10	pairs	ETC451	MF	
					KL	
					HP	
					W	✓
					Z	✓
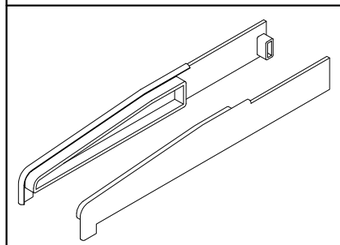	**ACET179** PVC Cill End Cap	10	pairs	ETC479	MF	
					KL	
					HP	
					W	✓
					Z	✓
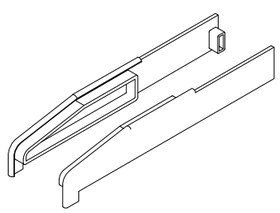	**ACET258** PVC Cill End Cap	10	pairs	ETC458	MF	
					KL	
					HP	
					W	✓
					Z	✓

Cast End Caps

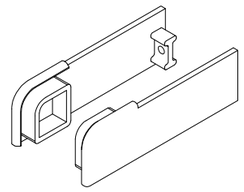	**ACET451** Cast Cill End Caps	1	pair	ETC451	MF	✓
					KL	✓
					HP	✓
					W	✓
					Z	✓
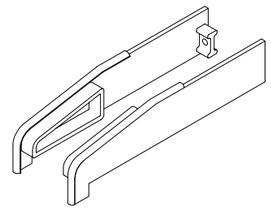	**ACET452** Cast Cill End Caps	1	pair	ETC452	MF	✓
					KL	✓
					HP	✓
					W	✓
					Z	✓
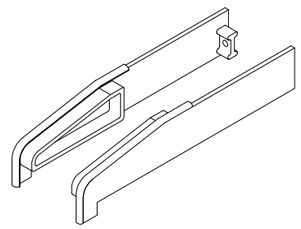	**ACET457** Cast Cill End Caps	1	pair	ETC457	MF	✓
					KL	✓
					HP	✓
					W	✓
					Z	✓
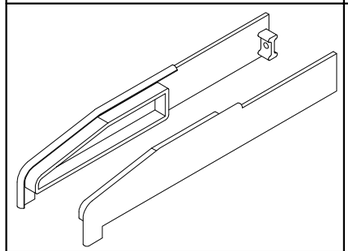	**ACET458** Cast Cill End Caps	1	pair	ETC458	MF	✓
					KL	✓
					HP	✓
					W	✓
					Z	✓
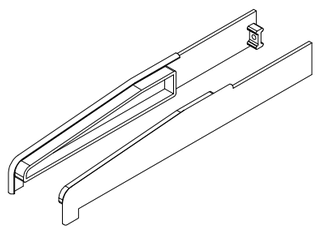	**ACET479** Cast Cill End Caps	1	pair	ETC479	MF	✓
					KL	✓
					HP	✓
					W	✓
					Z	✓

Note: ETC478 is not designed for concealed drainage

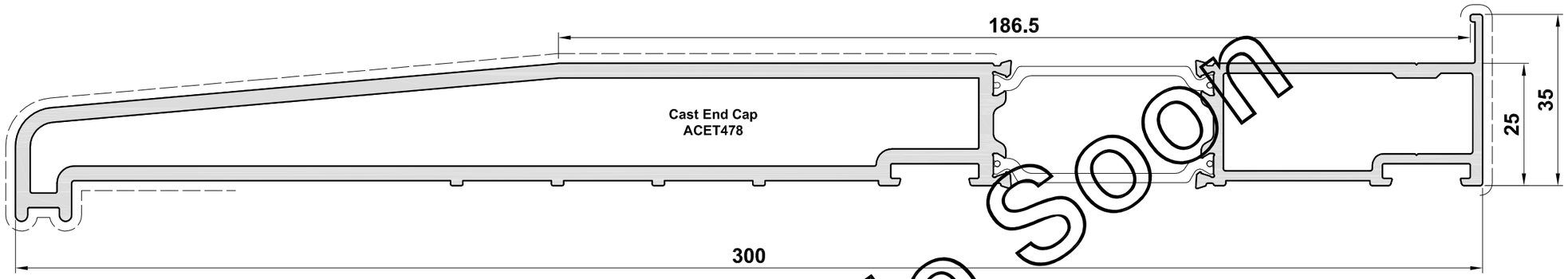

ETC478
300mm Cill

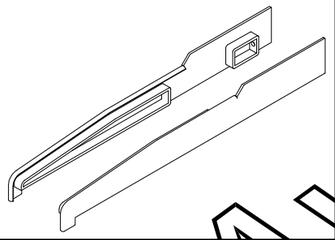	**ACET478** Cast Cill End Cap	**1**	**pair**	**ETC478**	MF	✓
					KL	✓
					HP	✓
					W	✓
					Z	✓

Available Soon

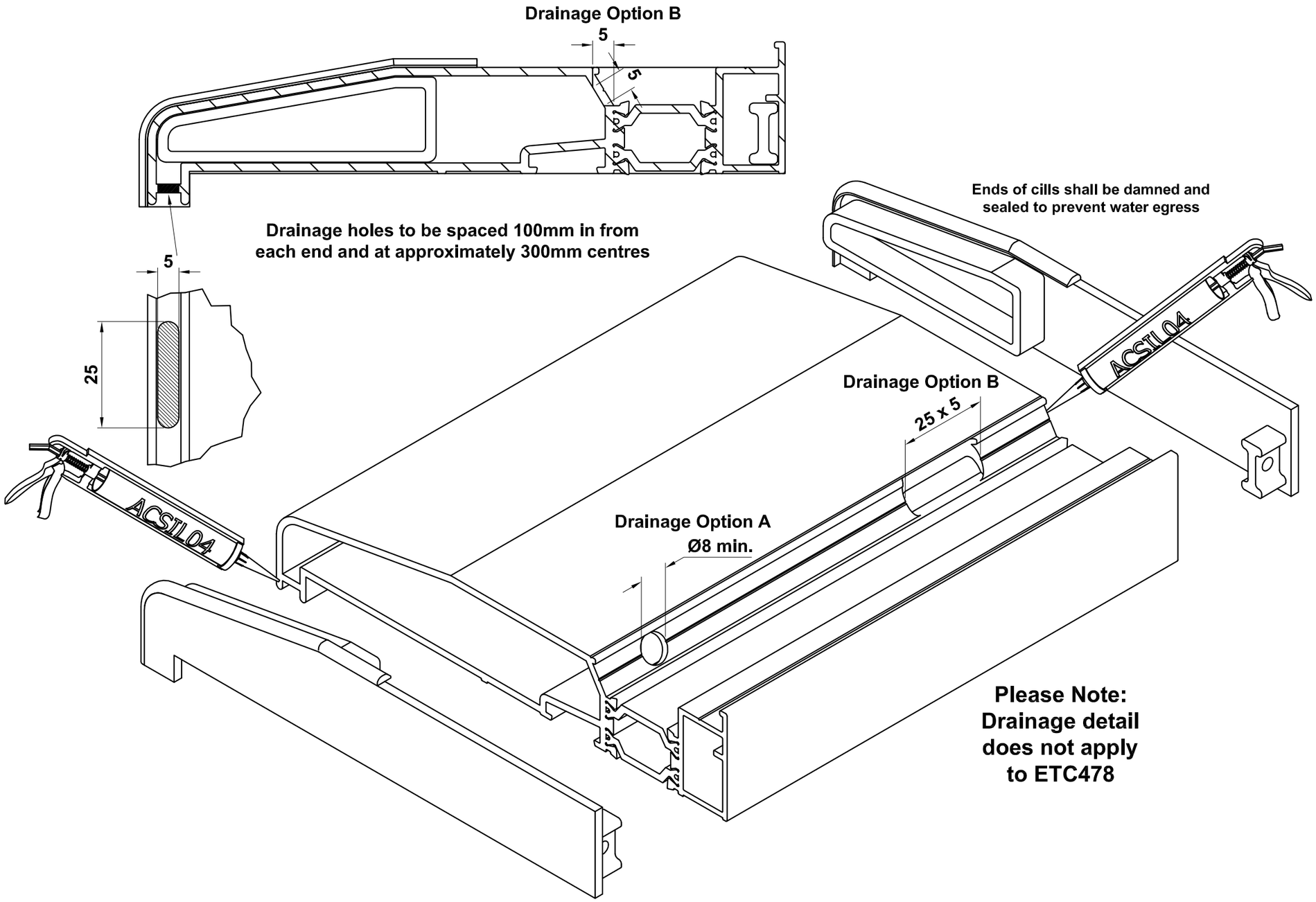
Drainage Option B
5
5
Drainage holes to be spaced 100mm in from
each end and at approximately 300mm centres
5
25
ACSIL04
Ends of cills shall be damned and
sealed to prevent water egress
ACSIL04
Drainage Option B
25 x 5
Drainage Option A
Ø8 min.
Please Note:
Drainage detail
does not apply
to ETC478

Bulletin

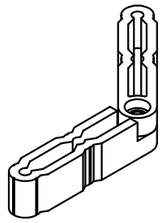	**ACET440** 90°-180° Variable angle bracket	10	pack	ETC451 ETC452 ETC457 ETC458 ETC479	MF	✓
					KL	
					HP	
					W	
					Z	

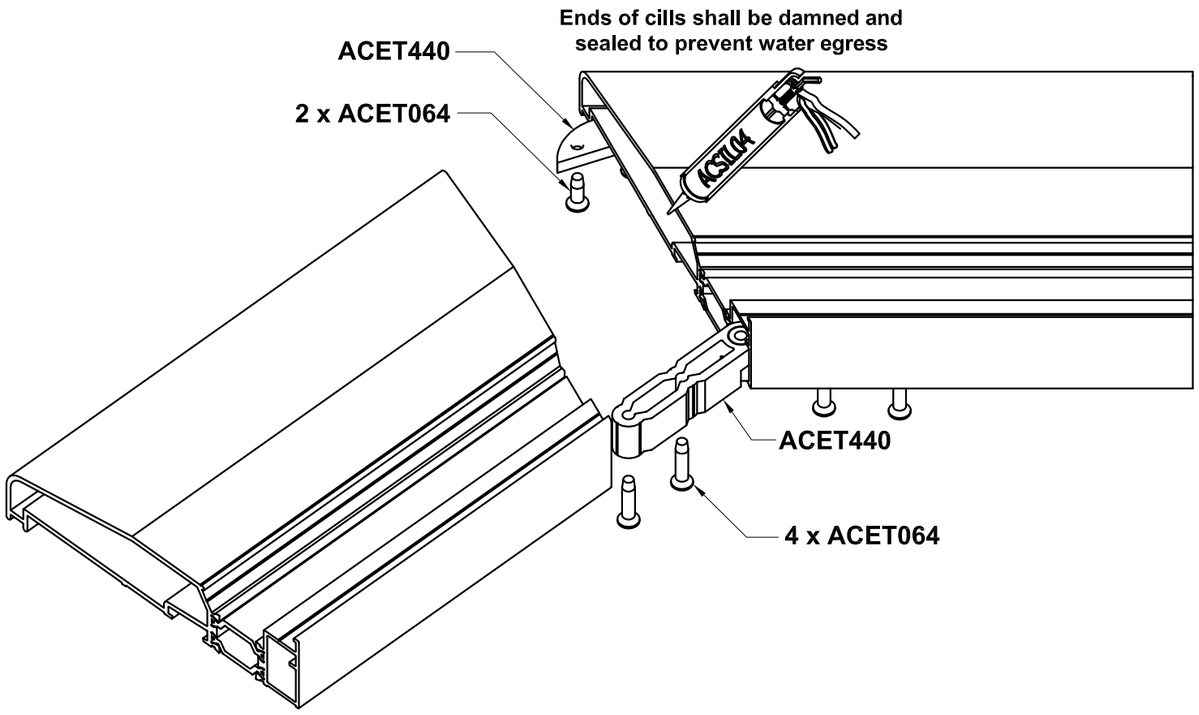

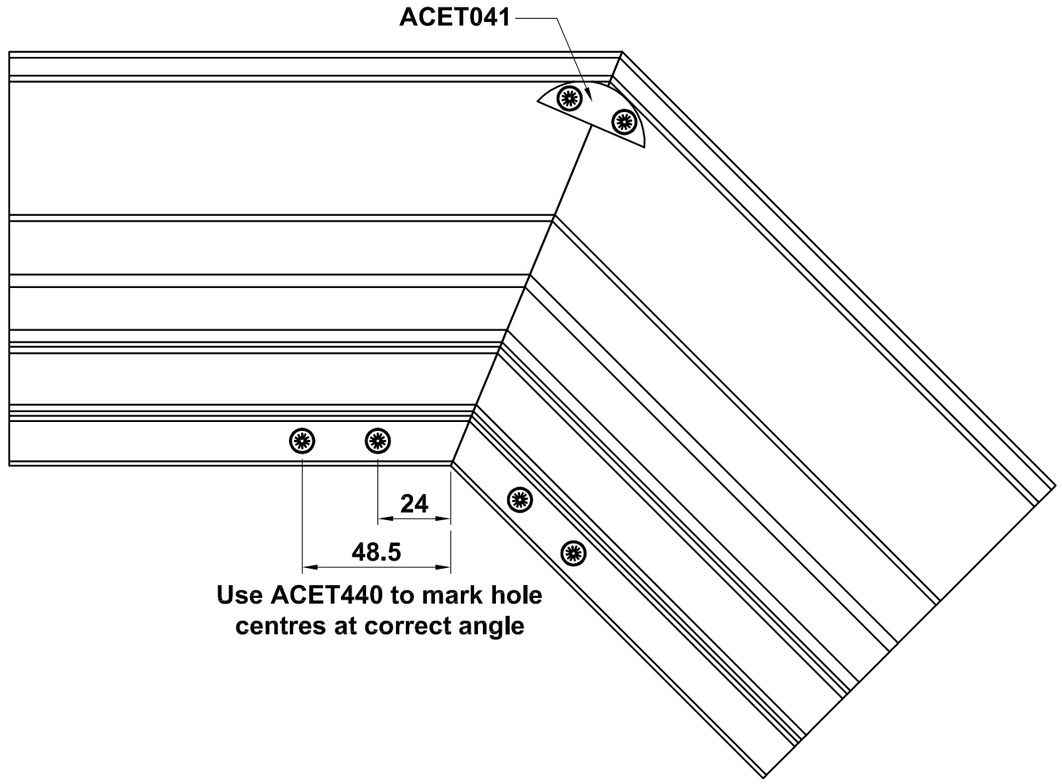

Bulletin

Example Lug Fixing Detail

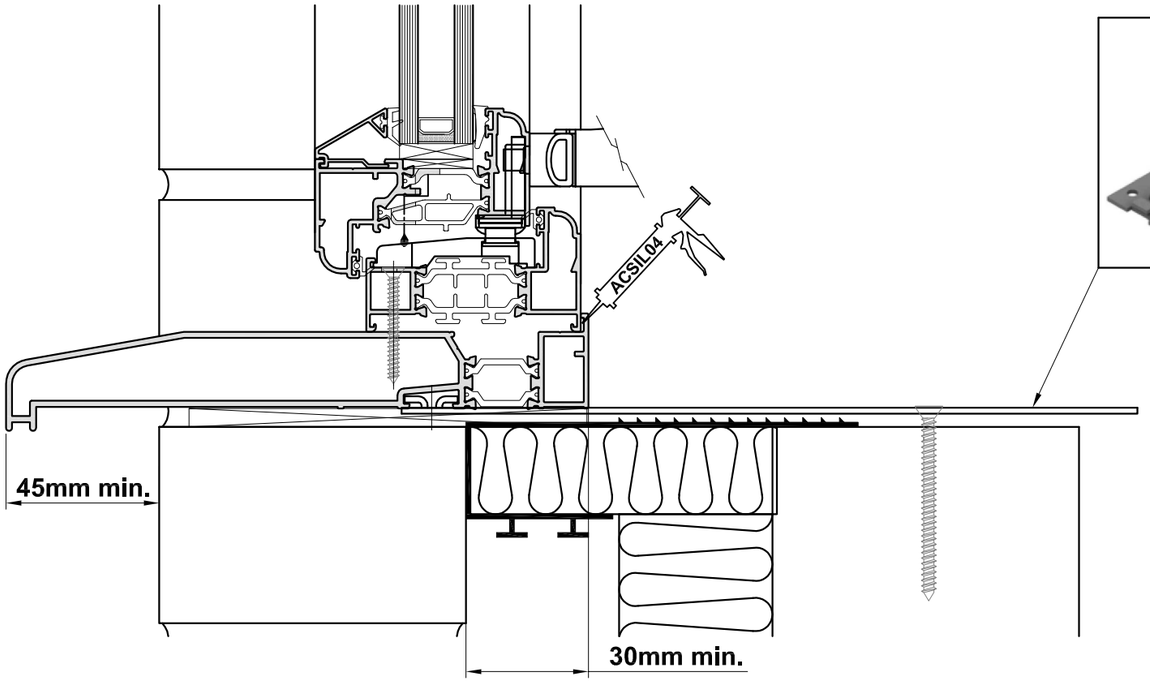

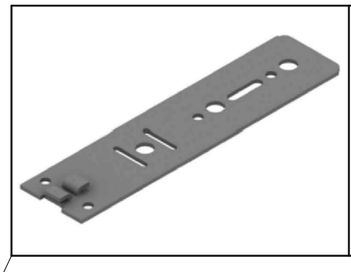	ACUN23X Screw Fixing Lug ACUN230: B = 160MM ACUN232: B = 240MM ACUN233: B = 280MM	100	Pack	ETC451 ETC452 ETC457 ETC458 ETC478 ETC479	MF	✓
					KL	
					HP	
					W	
					Z	
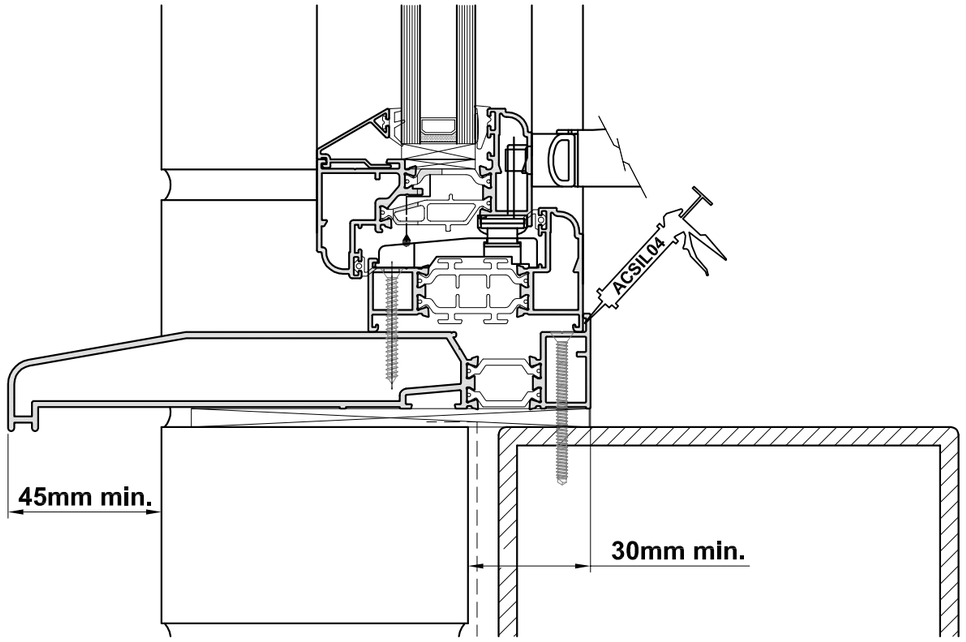
Example Direct Fixing Detail