Main Index

ETC Index

Index ..... Page A01-A02

A ETC

Profiles
Specification Pages ..... Page A03-A06
Technical Information ..... Page A07-A14
Scale Profile Drawings ..... Page A15-A42

B ETC

Accessories
Photos & Drawings ..... Page B03-B32

C ETC

Sections
Scale Sections ..... Page C03-C54

D ETC

Statics
Open Out ..... Page D01-D02

E ETC

Construction Drawings
Standard Stays
1 - Corner Jointing ..... Page E03-E05
2 - Drainage ..... Page E06-E07
3 - Angled Sub Cill ..... Page E08
4 - Transom/Mullion ..... Page E09-E11
5 - Hinges..... Page E12-E15
6 - Locking Hardware..... Page E16-E17
7 - Bead & Glazing ..... Page E18-E20
8 - ETC367 Notching Detail ..... Page E21
9 - Pull in Blocks/ Hinge Protectors ..... Page E22
10 - Bay Poles Deductions ..... Page E23-E25
11 - Fixing Strap Details ..... Page E26

F ETC

Sawing Tables
Cutting Information - Standard Stays ..... Page F02-F04

Updates

DATE	PAGE	DESCRIPTION
11-05-17	All Sections	Updated accessories, photos and drawings Added: - ETC302 - ETC477 - ACET355 - Angled Sub Cill
12-09-17	B21, E04	Amended Crimping details for ETC302

Specification

GENERAL DESCRIPTION

The "Alitherm 300" window system described in this manual is suitable for both replacement windows for existing buildings, and for installation into new buildings.

The system incorporates internally & externally beaded vent frames suitable for cockspur and espag locking.

The low line gaskets and extended polyamide thermal breaks help to provide excellent U Values and Window Energy Rating capable of achieving an 'A' Rating when used in conjunction with the correct double glazed unit.

Corner assembly of Alitherm 300 is by crimping only.

PROFILE SPECIFICATION

The window frame are constructed of aluminium alloy extrusion to BS EN 755-9 and BS EN 12020, extruded from 6063 T6 alloy. The internal and external extrusions are separated with a polyamide thermal break.

The external aluminium alloy extrusion is pre-treated and finished either:-

a) Anodised to BS 3987: 1987, grade AA25 to a natural self colour.

b) Polyester powder organic coating to BS 6496. Dual colour is available.

GENERAL MANUFACTURING

Outer and vent frames are made by cutting the frame profiles with accurate 45° mitred ends using Tungsten Carbide Tipped Saw Blades, operating at approximately 3000 rpm.

The corners are joined using the Alitherm 300 crimping tools to form a cold forged corner joint (made by deforming small slugs of metal into the groove of the corner cleat).

The ends of transoms and mullions are profiled to fit the frame and fixed using self-tapping screws with a silicone seal.

On polyester powder coated finishes, great care should be taken to avoid getting gap sealer on visible surfaces and should be removed as soon as possible with a clean cloth.

Care should be exercised when using products not supplied by Smart Systems Ltd as no responsibility can be accepted.

Specification

Kitemark™ Certificate
No. KM 81580

Size Limitations and Performance Characteristics
Alitherm 300 Aluminium Alloy Window System

Window Type	Width (mm) - Maximum	Height (mm) - Maximum	Weight (kg) - Maximum	Area (M²) - Maximum	Friction Stays (up to and including)	Transom/Mullion Length (mm) inc frame - Maximum	Air Permeability classification	Water tightness classification	Resitance to Wind classification	Exposure category as given in Table 1 of BS 6375-1:2009
Sash dimensions for windows with approved sash profiles:										
Projecting top hung Internally beaded	1400	1400	40	-	24"	-	4	7A	AE2400	2000+
Projecting top hung Externally beaded	1400	1400	40	-	24"	-	4	5A	AE2400	2000+
Projecting side hung Internally beaded	600	1400	28	-	16"	-	4	7A	AE2400	2000+
Projecting side hung Externally beaded	600	1400	28	-	16"	-	4	5A	AE2400	2000+
Overall dimensions for windows with approved outer frame profiles:										
Fixed Internally Beaded	2100	2100	-	4.2	-	-	4	7A	AE2400	2000+
Fixed Externally Beaded	2100	2100	-	4.2	-	-	4	5A	AE2400	2000+
Overall dimensions for approved outer frames & transom/mullion profiles:										
Multilights* Internally Beaded	2100	2100	-	2.5	-	1200	4	7A	AE2400	2000+
Multilights* Externally Beaded	2100	2100	-	2.5	-	1200	4	5A	AE2400	2000+

*Transom/mullion subject to Ixx/Iyy requirements

Please see pages B24, 25 & 26 for more guidance on vent sizes & limitations.

- Side Hung Weight Limit Can Be Increased To 40 kg Using Egress Hinges
- See hardware for minimum sizes

Specification

WINDOW DRAINAGE

As with all dry glazed systems, it is recommended that the window system is adequately drained and ventilated. Refer to drainage details in manual, if in doubt ask The Technical Department.

In order to get maximum performance and weather resistance it is recommended that drips are used over all vents.

OUTER FRAME MANUFACTURING INFORMATION

The outer frame members are cut with 45° mitred ends to the overall size required, measured to the longest point of the metal.

Prior to corner crimping the centre line position of any transoms or mullions should be marked on the outer frame members. Where the transom/mullion runs right through, it should be marked out on both jambs or head and cill members in pairs to ensure accurate alignment of the sections.

Using the marked centre line, Drill the transom/mullion fixing holes using a 5mm dia. drill bit.

Corners are formed by coating the cut faces to be joined with a suitable small gap sealer. Into the mitred corner insert the cleat glue and the required corner cleats and, where required, the aluminium corner chevrons. The two mitred ends are then brought together and crimped. The small gap sealer ensures a permanent joint and guards against the ingress of moisture and joint movement. After crimping the corner joint, special care should be taken to ensure any excess sealer is removed from painted surfaces.

Transoms or mullions are cut with square ends to the sizes calculated on the cutting formula sheets. The ends are then profiled to allow them to fit into the outer frame. Special tooling is available on request to profile the end of transom/mullion.

Prior to fixing of transoms and mullions smear the cut ends with a suitable gap sealer. After fixing, special care should be taken to ensure any excess is cleared from painted surfaces.

Specification

Number	Picture	Page	Perim. mm	Mec. mm	Ix(cm4) wx(cm3)	Iy(cm4) wy(cm3)	Length	Pack pr.	MF	SA	KL	HP	M
ETC057	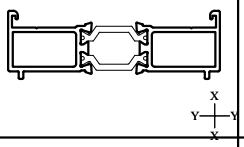	A37	251	41	16.30 ----- 4.66	1.12 ----- 1.55	6.5	1	✓	✓	✓	✓	✓
ETC302	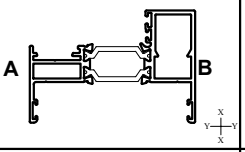	A15	340	131	25.6 ----- 6.5	5.3 ----- 2.4	6.5	1	✓	✓	✓	✓	✓
ETC303	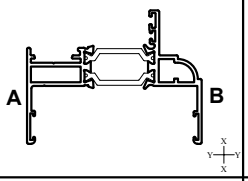	A15	383	110	23.2 ----- 6.54	4.41 ----- 1.68	6.5	1	✓	✓	✓	✓	✓
ETC304	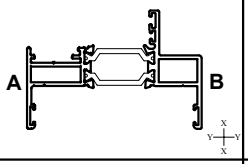	A16	361	101	22.01 ----- 6.10	3.23 ----- 1.31	6.5	1	✓	✓	✓	✓	✓
ETC305	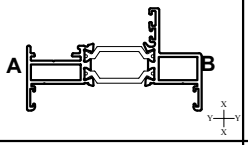	A16	335	88	19.40 ----- 5.34	2.25 ----- 1.28	6.5	1	✓	✓	✓	✓	✓
ETC306	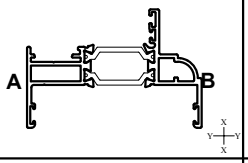	A17	357	98	21.18 ----- 5.95	3.20 ----- 1.42	6.5	1	✓	✓	✓	✓	✓
ETC308	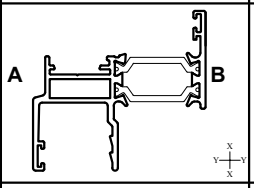	A17	357	83	12.96 ----- 4.27	4.48 ----- 1.74	6.5	1	✓	✓	✓	✓	✓
ETC310	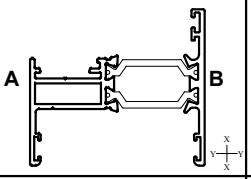	A18	322	86	14.20 ----- 4.60	3.49 ----- 1.49	6.5	1	✓	✓	✓	✓	✓
ETC313	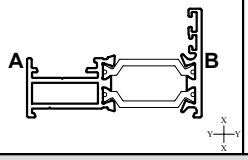	A18	252	58	10.7 ----- 3.41	1.8 ----- 1.62	6.5	1	✓	✓	✓	✓	✓

A = Outside
B = Inside

GOZ = Gold
W = White
Z = Black

MF = Mill Finish
SA = Silver Anodised
KL = Basic Colour
HP = Special Colour
M = Dual Colour

Number	Picture	Page	Perim. mm	Mec. mm	Ix(cm4) wx(cm3)	Iy(cm4) wy(cm3)	Length	Pack pr.	MF	SA	KL	HP	M
ETC321	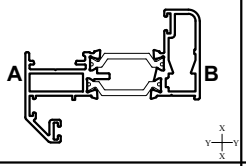	A19	332	85	17.59 ----- 5.68	4.12 ----- 1.78	6.5	1	✓	✓	✓	✓	✓
ETC323	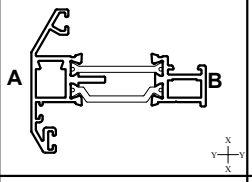	A19	402	108	12.38 ----- 3.44	3.09 ----- 1.34	6.5	1	✓	✓	✓	✓	✓
ETC324	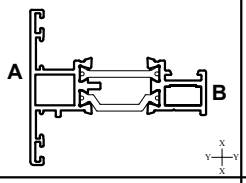	A20	267	69	16.66 ----- 5.16	2.58 ----- 1.14	6.5	1	✓	✓	✓	✓	✓
ETC326	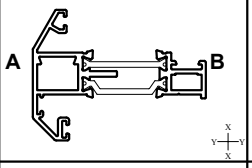	A20	342	77	14.90 ----- 3.87	3.40 ----- 1.49	6.5	1	✓	✓	✓	✓	✓
ETC327	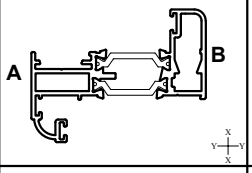	A21	335	86	17.59 ----- 5.67	4.12 ----- 1.78	6.5	1	✓	✓	✓	✓	✓
ETC328N	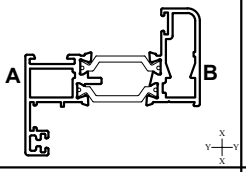	A21	277	90	14.99 ----- 5.25	4.21 ----- 1.85	6.5	1	✓	✓	✓	✓	✓
ETC329	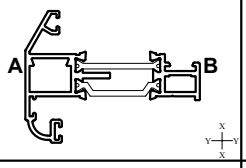	A22	343	80	14.95 ----- 3.88	3.42 ----- 1.51	6.5	1	✓	✓	✓	✓	✓
ETC333	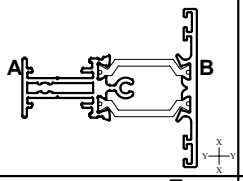	A24	389	54	11.64 ----- 3.62	**2.63** ----- 1.09	6.5	1	✓	✓	✓	✓	✓
ETC335	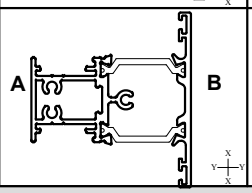	A24	383	97	15.06 ----- 5.25	5.56 ----- 1.92	6.5	1	✓	✓	✓	✓	✓

A = Outside
B = Inside

GOZ = Gold
W = White
Z = Black

MF = Mill Finish
SA = Silver Anodised
KL = Basic Colour
HP = Special Colour
M = Dual Colour

Number	Picture	Page	Perim. mm	Mec. mm	Ix(cm4) wx(cm3)	Iy(cm4) wy(cm3)	Length	Pack pr.	MF	SA	KL	HP	M
ETC336	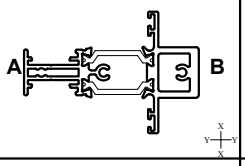	A24	372	106	22.34 ----- 5.40	3.35 ----- 1.40	6.5	1	✓	✓	✓	✓	✓
ETC343	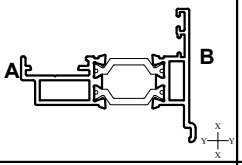	A27	274	57	9.12 ----- 2.77	1.81 ----- 0.92	6.5	1	✓	✓	✓	✓	✓
ETC344	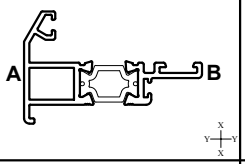	A26	246	41	5.75 ----- 3.04	1.16 ----- 0.62	6.5	1	✓	✓	✓	✓	✓
ETC345	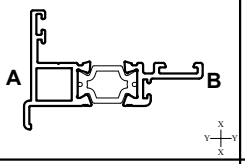	A26	227	41	4.85 ----- 2.66	1.23 ---- 0.59	6.5	1	✓	✓	✓	✓	✓
ETC346N	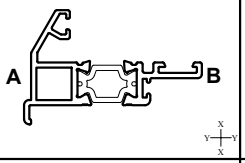	A26	314	47	4.87 ----- 2.50	1.12 ----- 0.60	6.5	1	✓	✓	✓	✓	✓
ETC347	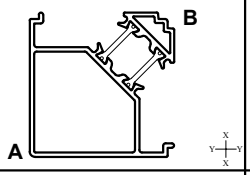	A32	344	94	16.65 ----- 5.90	16.65 ----- 6.11	6.5	1	✓	✓	✓	✓	✓
ETC352	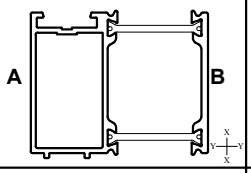	A36	293	85	13.07 ----- 4.73	7.25 ----- 3.40	6.5	1	✓	✓	✓	✓	✓
ETC353	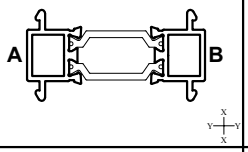	A34	214	32	9.44 ----- 3.56	1.15 ----- 0.85	6.5	1	✓	✓	✓	✓	✓
ETC356	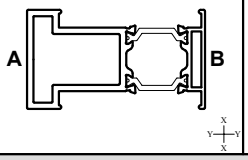	A36	311	111	32.05 ----- 8.28	7.19 ----- 3.69	6.5	1	✓	✓	✓	✓	✓

A = Outside
B = Inside

GOZ = Gold
W = White
Z = Black

MF = Mill Finish
SA = Silver Anodised
KL = Basic Colour
HP = Special Colour
M = Dual Colour

Number	Picture	Page	Perim. mm	Mec. mm	Ix(cm4) wx(cm3)	Iy(cm4) wy(cm3)	Length	Pack pr.	MF	SA	KL	HP	M
ETC357	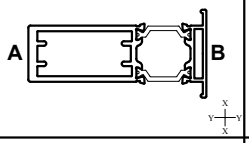	A37	297	138	41.5 ----- 9.86	5.2 ----- 2.67	6.5	1	✓	✓	✓	✓	✓
ETC358	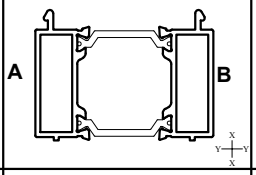	A39	264	33	12.95 ----- 4.89	4.74 ----- 2.61	6.5	1	✓	✓	✓	✓	✓
ETC360	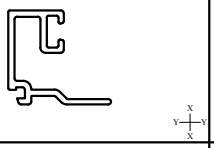	A23	119	26	- ----- -	- ----- -	6.5	1	✓	✓	✓	✓	
ETC361	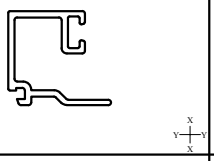	A23	127	30	- ----- -	- ----- -	6.5	1	✓	✓	✓	✓	
ETC362	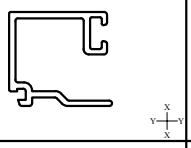	A23	135	34	- ----- -	- ----- -	6.5	1	✓	✓	✓	✓	
ETC364	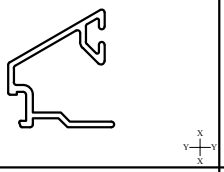	A28	122	28	- ----- -	- ----- -	6.5	1	✓	✓	✓	✓	
ETC366	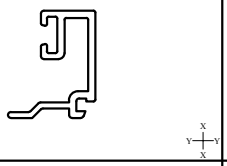	A29	106	24	- ----- -	- ----- -	6.5	1	✓	✓	✓	✓	
ETC367	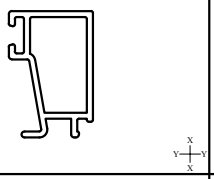	A29	89	33	- ----- -	- ----- -	6.5	1	✓	✓	✓	✓	
ETC370	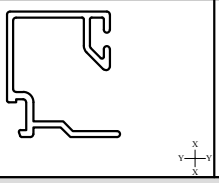	A28	141	32	- ----- -	- ----- -	6.5	1	✓	✓	✓	✓	

A = Outside
B = Inside

GOZ = Gold
W = White
Z = Black

MF = Mill Finish
SA = Silver Anodised
KL = Basic Colour
HP = Special Colour
M = Dual Colour

Number	Picture	Page	Perim. mm	Mec. mm	Ix(cm4) wx(cm3)	Iy(cm4) wy(cm3)	Length	Pack pr.	MF	SA	KL	HP	M
ETC371	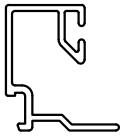	A29	133	28	- ----- -	- ----- -	6.5	1	✓	✓	✓	✓	
ETC372		A26	96	22	- ----- -	- ----- -	6.5	1	✓	✓	✓	✓	
ETC373		A26	102	25	- ----- -	- ----- -	6.5	1	✓	✓	✓	✓	
ETC374	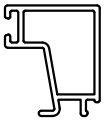	A28	97	37	- ----- -	- ----- -	6.5	1	✓	✓	✓	✓	
ETC375		A29	112	22	- ----- -	- ----- -	6.5	1	✓	✓	✓	✓	
ETC376	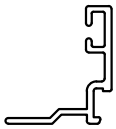	A30	100	20	- ----- -	- ----- -	6.5	1	✓	✓	✓	✓	
ETC377		A30	124	24	- ----- -	- ----- -	6.5	1	✓	✓	✓	✓	
ETC378		A32	96	21	- ----- -	- ----- -	6.5	1	✓	✓	✓	✓	
ETC379		A30	112	23	- ----- -	- ----- -	6.5	1	✓	✓	✓	✓	

A = Outside
B = Inside

GOZ = Gold
W = White
Z = Black

MF = Mill Finish
SA = Silver Anodised
KL = Basic Colour
HP = Special Colour
M = Dual Colour

Number	Picture	Page	Perim. mm	Mec. mm	Ix(cm4) wx(cm3)	Iy(cm4) wy(cm3)	Length	Pack pr.	MF	SA	KL	HP	M
ETC381	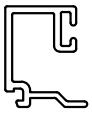	A32	114	28	- ----- -	- ----- -	6.5	1	✓	✓	✓	✓	
ETC385	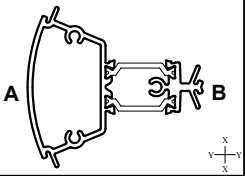	A31	357	65	26.65 ----- 6.53	12.38 ----- 3.83	6.5	1	✓	✓	✓	✓	✓
ETC420	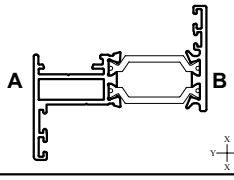	A18	272	92	11.21 ----- 3.94	2.50 ----- 1.06	6.5	1	✓	✓	✓	✓	✓
ETC423	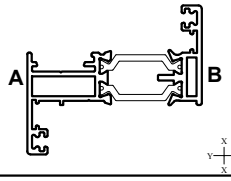	A22	331	77	14.35 ----- 5.09	3.30 ----- 1.40	6.5	1	✓	✓	✓	✓	✓
ETC424N	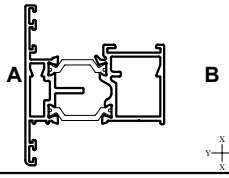	A23	383	84	15.26 ----- 4.81	6.91 ----- 2.26	6.5	1	✓	✓	✓	✓	✓
ETC048	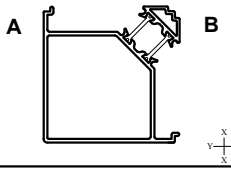	A32	400	152	42.64 ----- 11.72	42.64 ----- 11.81	6.5	1	✓	✓	✓	✓	✓
ETC052		A38	242	-	0.77 ----- 0.71	15.51 ----- 4.77	4	1	✓				
ETC080	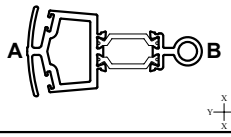	A33	334	61	25.58 ----- 5.47	4.88 ----- 2.57	6.5	1	✓	✓	✓	✓	✓
ETC081	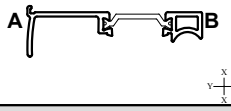	A33	197	35	13.85 ----- 3.8	0.36 ----- 0.52	6.5	1	✓	✓	✓	✓	✓

A = Outside
B = Inside

GOZ = Gold
W = White
Z = Black

MF = Mill Finish
SA = Silver Anodised
KL = Basic Colour
HP = Special Colour
M = Dual Colour

Number	Picture	Page	Perim. mm	Mec. mm	Ix(cm4) wx(cm3)	Iy(cm4) wy(cm3)	Length	Pack pr.	MF	SA	KL	HP	M
ETC082	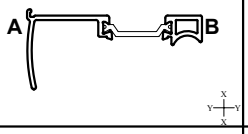	A33	221	47	16.21 ----- 4.19	1.15 ----- 1.29	6.5	1	✓	✓	✓	✓	✓
ETC083	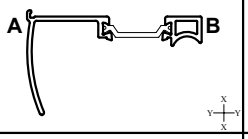	A33	243	58	17.66 ----- 4.32	2.64 ----- 2.36	6.5	1	✓	✓	✓	✓	✓
ETC150	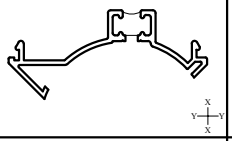	A31	282	48	11.29 ----- 0.75	1.12 ----- 0.73	6.5	1	✓	✓	✓	✓	
ETC160	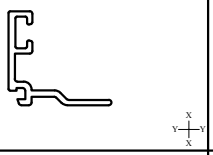	A31	94	20	- — -	- — -	6.5	1	✓	✓	✓	✓	
ETC273	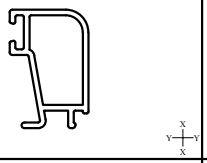	A29	88	31	- — -	- — -	6.5	1	✓	✓	✓	✓	
ETC451	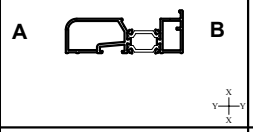	A39	304	109	32.44 ----- 7.29	3.46 ----- 2.79	6.5	1	✓	✓	✓	✓	✓
ETC452	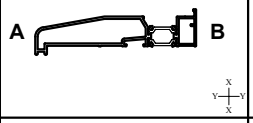	A39	414	197	122.46 ----- 18.03	6.01 ----- 3.34	6.5	1	✓	✓	✓	✓	✓
ETC457	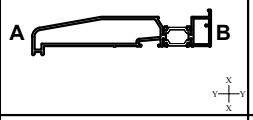	A39	444	212	163.27 ----- 21.60	6.79 ----- 3.73	6.5	1	✓	✓	✓	✓	✓
ETC458	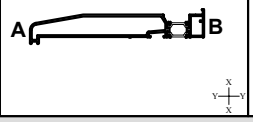	A40	524	252	313.62 ----- 32.63	8.87 ----- 4.79	6.5	1	✓	✓	✓	✓	✓

A = Outside
B = Inside

GOZ = Gold
W = White
Z = Black

MF = Mill Finish
SA = Silver Anodised
KL = Basic Colour
HP = Special Colour
M = Dual Colour

Number	Picture	Page	Perim. mm	Mec. mm	Ix(cm4) wx(cm3)	Iy(cm4) wy(cm3)	Length	Pack pr.	MF	SA	KL	HP	M
ETC477	A B	A40	752	408	1591.6 ----- 105.33	26.84 ----- 12.84	6.5	1	✓	✓	✓	✓	✓
ETC479	A B	A40	594	287	501.64 ----- 44.04	9.72 ----- 5.34	6.5	1	✓	✓	✓	✓	✓
ETC559		A40	318	41	15.75 ----- 4.50	1.17 ----- 0.98	6.5	1	✓	✓	✓	✓	✓
ETC853		A35	230	41	23.28 ----- 6.65	1.94 ----- 1.4	6.5	1	✓	✓	✓	✓	✓
ETC869		A31	312	144	18.38 ----- 6.13	14.30 ----- 5.17	6.5	1	✓	✓	✓	✓	✓
DV515		A38	289	97	27.16 ----- 7.76	14.38 ----- 6.75	6.5	1	✓	✓	✓	✓	✓
ETD330	A B A & B may be reversed	A25	545	197	28.40 ----- 10.55	56.92 ----- 10.44	6.5	1	✓	✓	✓	✓	✓
PCX41	PVC	A40	65	-	- — -	- — -	6.5	1	✓				
VL72		A40	101	32	- ----- -	- ----- -	6.5	5	✓	✓	✓	✓	

Primary Visible Side - - - - - - - - - - - - - - - - - - Secondary Visible Side — · — · — · — · — · — · — · —

ETC302

70mm Long Leg Square Outerframe

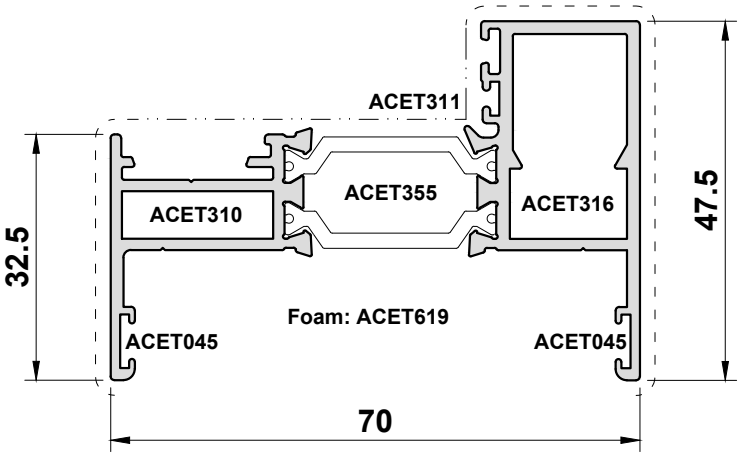

ETC303

70mm Long Leg Ovolo Outerframe

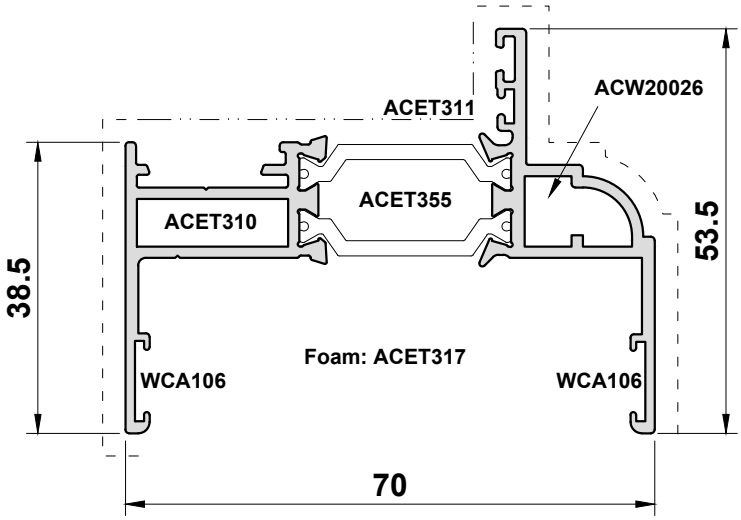

Scale 1:1

Primary Visible Side - - - - - - - - - - - - - - - - - - Secondary Visible Side — · — · — · — · — · — · — · —

ETC304
70mm Long Leg Square Outerframe

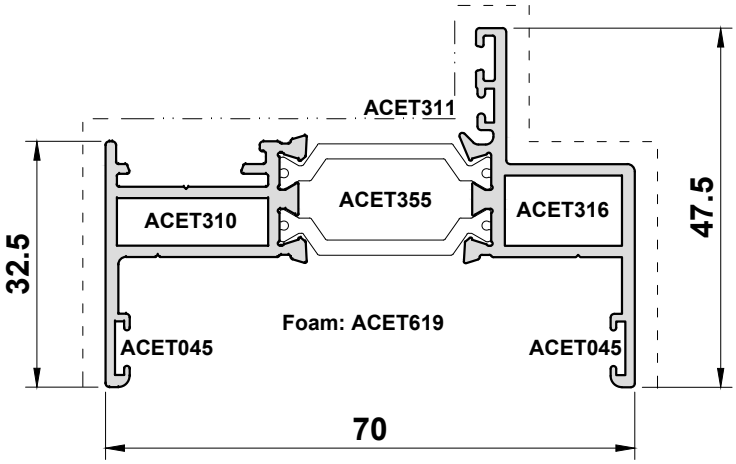

ETC305
70mm Short Leg Square Outerframe

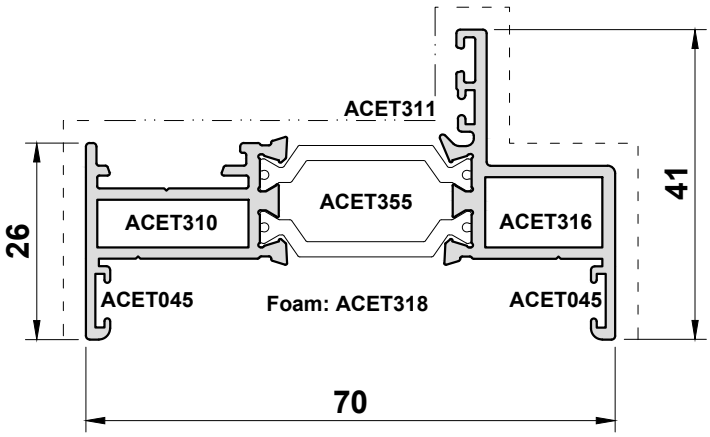

Scale 1:1

Primary Visible Side - - - - - - - - - - - - - - - - - - Secondary Visible Side — · — · — · — · — · — · — · —

ETC306
70mm Ovolo Outerframe

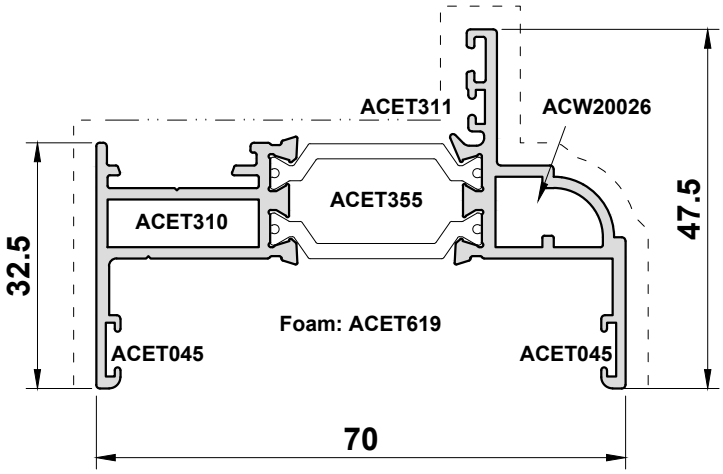

ETC308
Outerframe For Curtain Wall

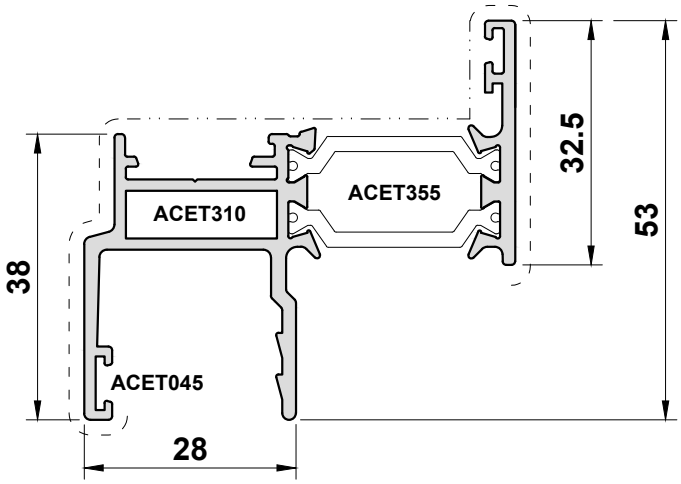

Scale 1:1

Primary Visible Side - - - - - - - - - - - - - - - - - - Secondary Visible Side — · — · — · — · — · — · — · —

ETC310
Long Leg Outerframe

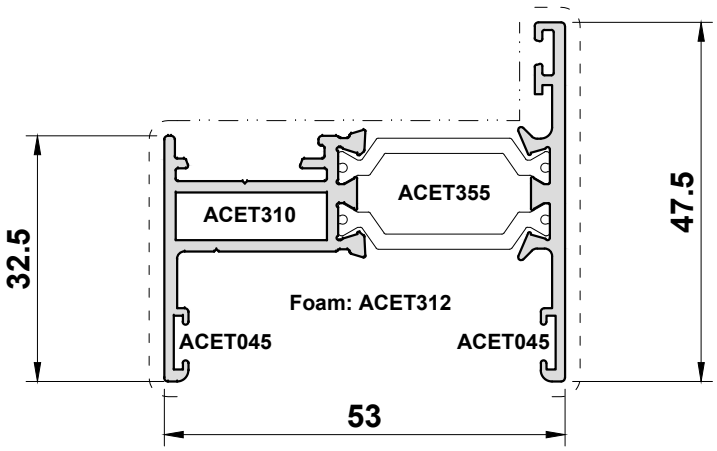

ETC420
Odd Leg Outer Frame

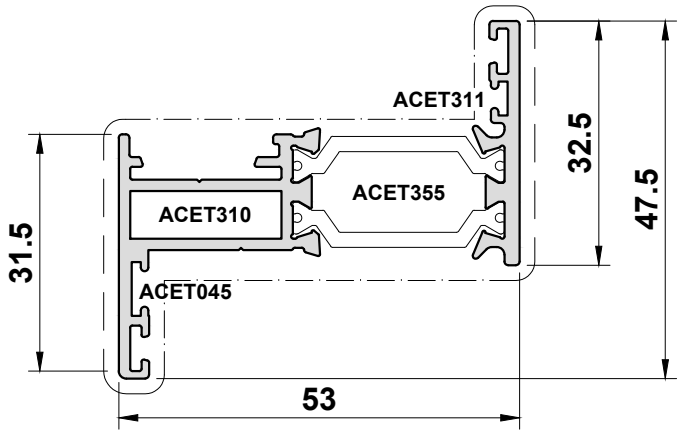

ETC313
Short Leg Outerframe

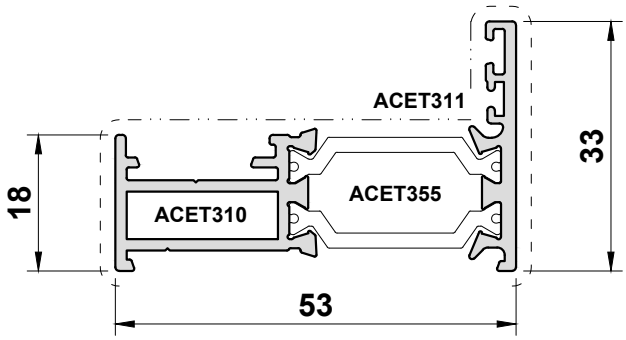

Scale 1:1

Primary Visible Side - - - - - - - - - - - - - - - - - - Secondary Visible Side — · — · — · — · — · — · — · —

ETC321

Chamfered Vent

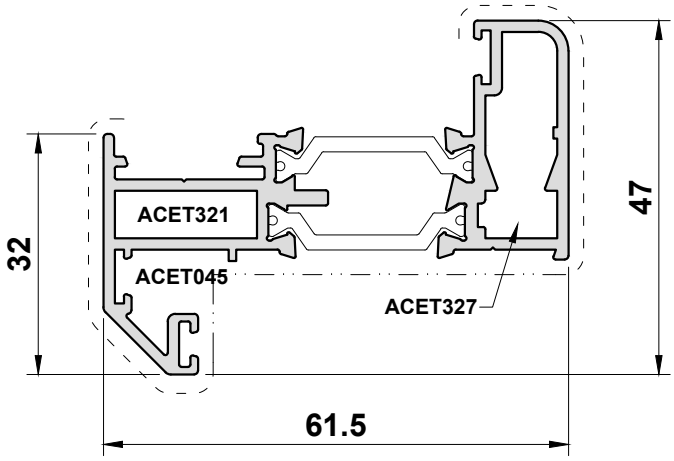

ETC323

Internally Beaded Chamfered Vent

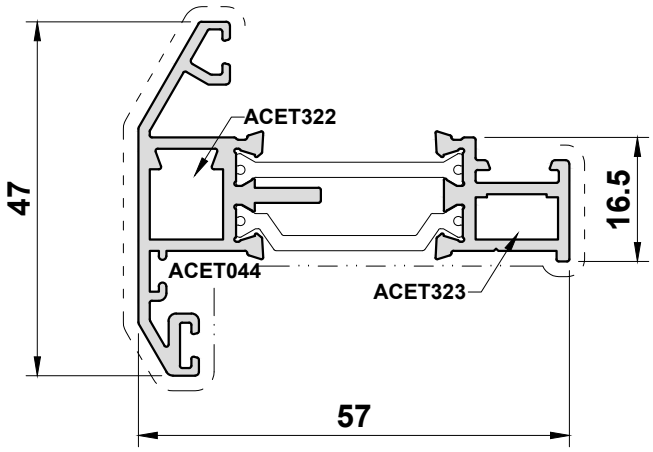

Scale 1:1

Primary Visible Side - - - - - - - - - - - - - - - - - - Secondary Visible Side — · — · — · — · — · — · — · —

ETC324
Internally Beaded Flat Vent

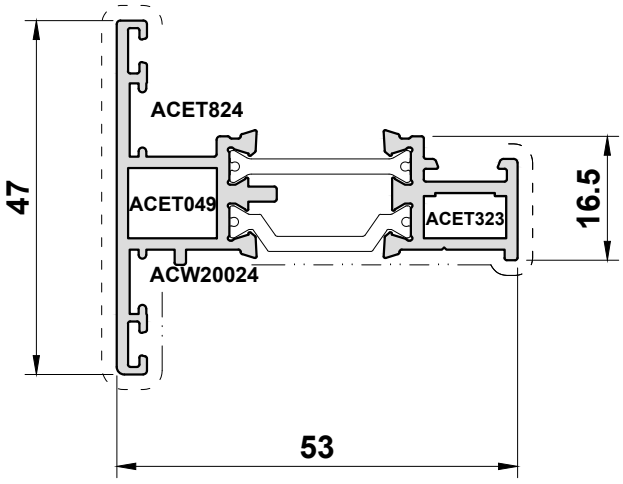

ETC326
Internally Beaded Chamfered Vent

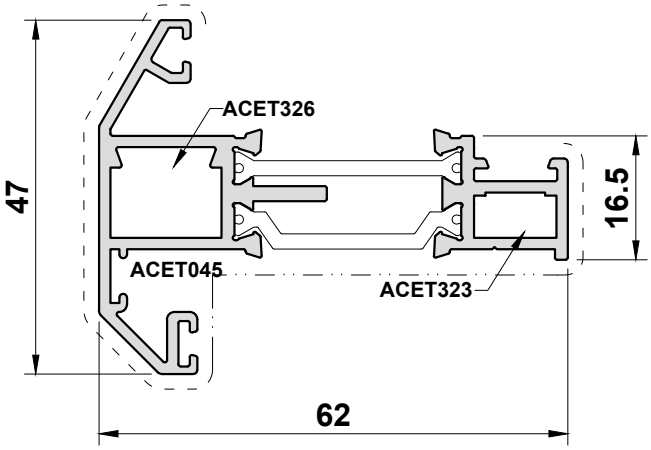

Scale 1:1

Primary Visible Side - - - - - - - - - - - - - - - - - - Secondary Visible Side — · — · — · — · — · — · — · —

ETC327

Ovolo Vent

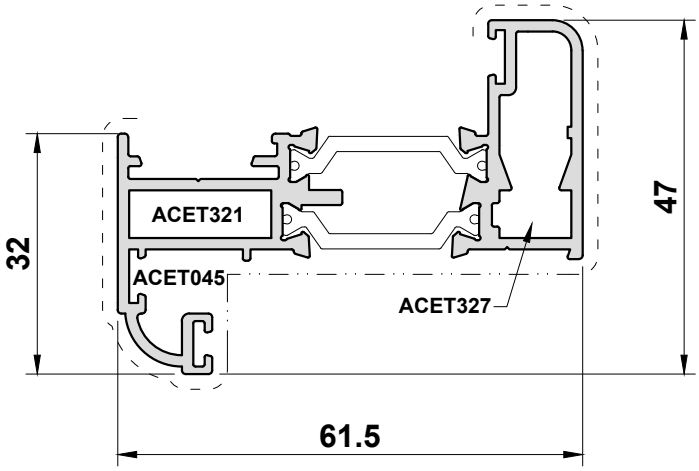

ETC328N

Externally Glazed Square Vent

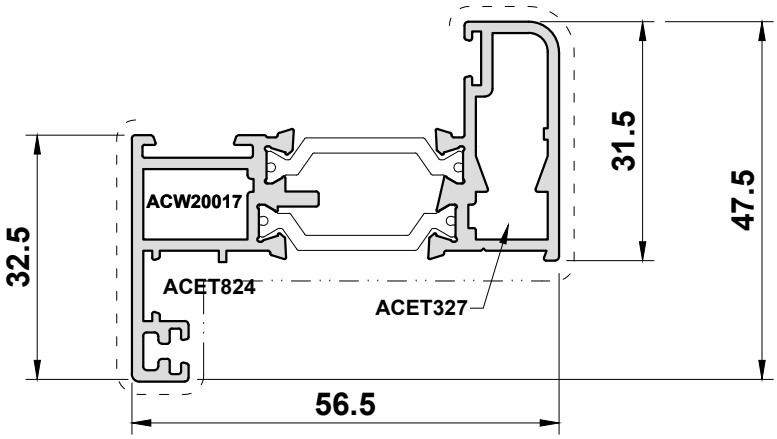

Scale 1:1

Primary Visible Side - - - - - - - - - - - - - - - - - - Secondary Visible Side — · — · — · — · — · — · — · —

ETC329

Internally Beaded Ovolo Vent

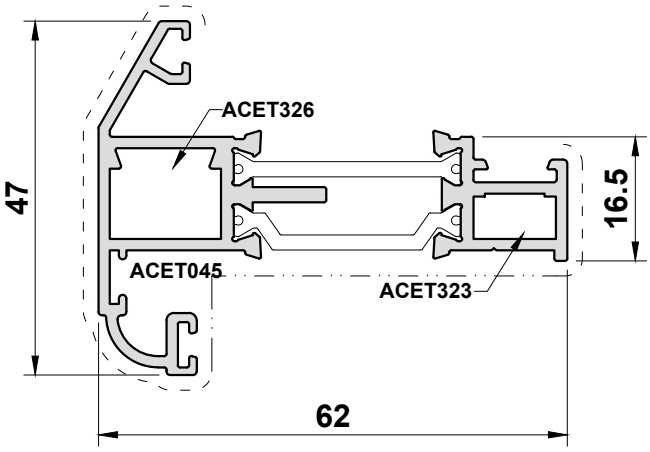

ETC423

Vent/Odd Leg Outer Frame

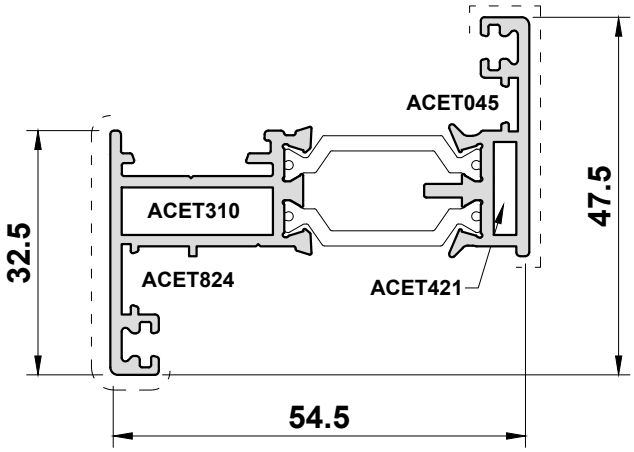

Scale 1:1

Primary Visible Side - - - - - - - - - - - - - - - - - - Secondary Visible Side — · — · — · — · — · — · — · —

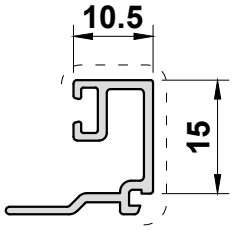

ETC360
(32mm Glazing)

ETC424N
Flat Internally Beaded Vent

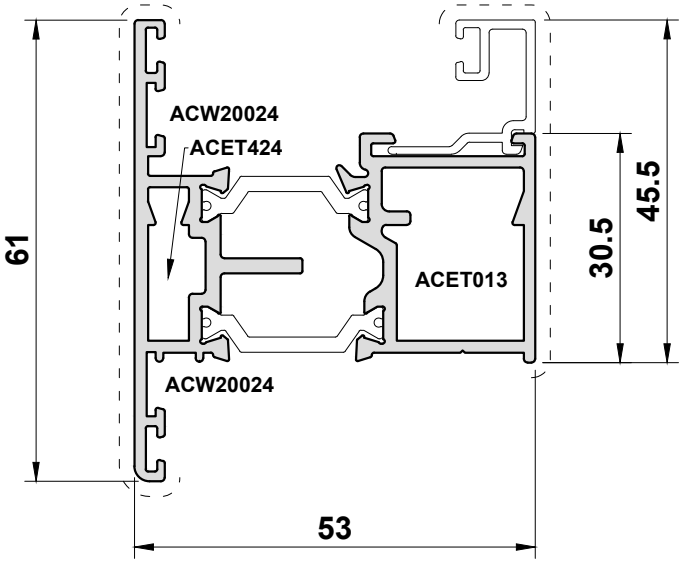

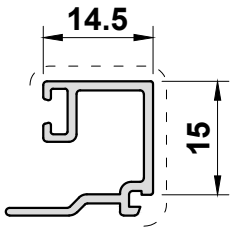

ETC361
(28mm Glazing)

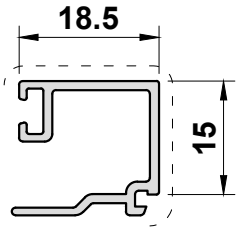

ETC362
(24mm Glazing)

Scale 1:1

Primary Visible Side - - - - - - - - - - - - - - - - - - Secondary Visible Side — · — · — · — · — · — · —

ETC333
Transom / Mullion

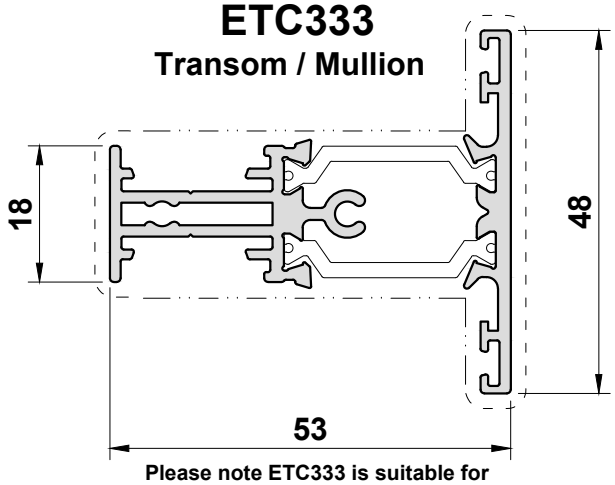

Please note ETC333 is suitable for single vents & fixed lights only

ETC335
Wide Transom / Mullion

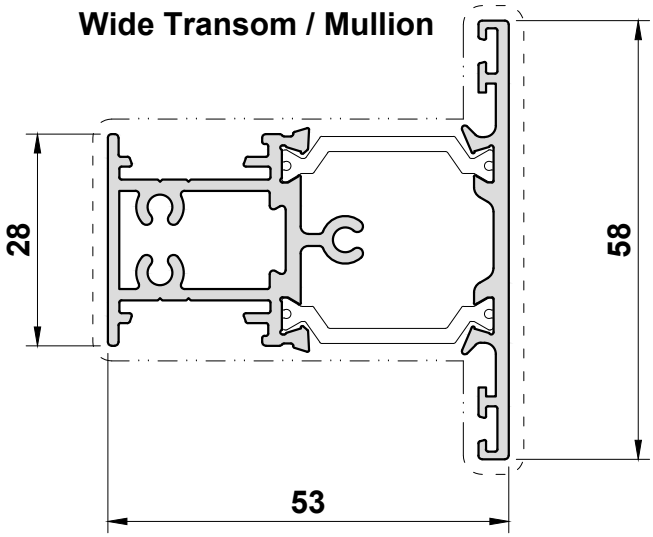

ETC336
Reinforced Transom / Mullion

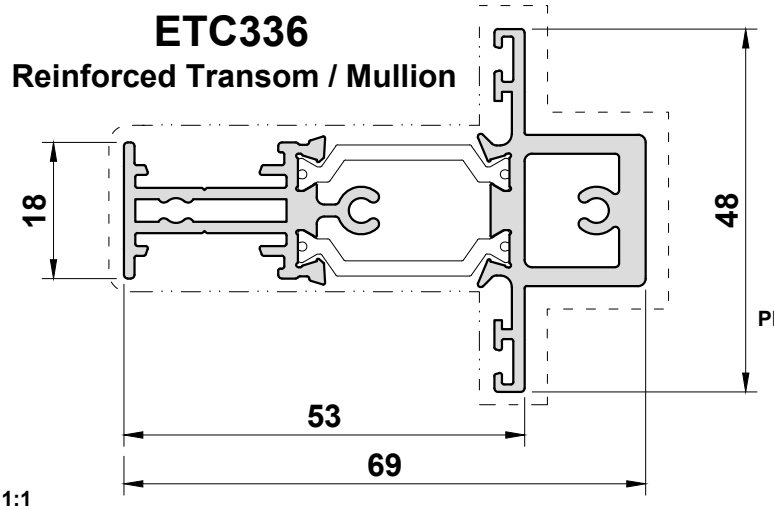

Please note ETC336 is suitable for single vents & fixed lights only

Scale 1:1

Primary Visible Side - - - - - - - - - - - - - - - - - - Secondary Visible Side — · — · — · — · — · — · — · —

ETD330

Transom / Mullion to match ETD030
(Recommended for fixed lights only)

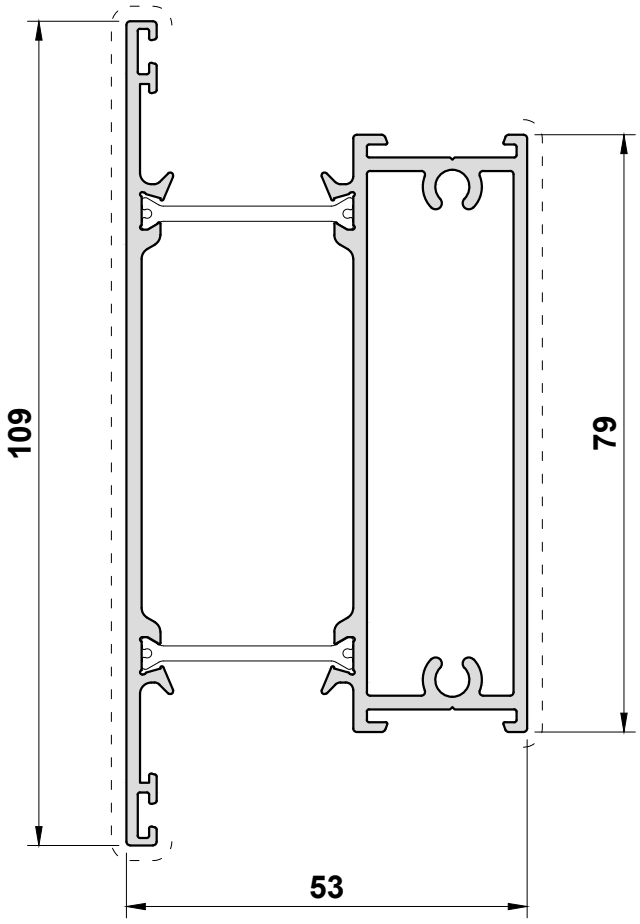

ETD330 can be used with the outerframes shown in this manual providing the following beads & gasket are used in the midrail:
24mm = ETC362 with ACET841 gasket externally & ACW20034 gasket internally
28mm = ETC361 with ACET841 gasket externally & ACW20034 gasket internally

ETD330 is recommended for fixed lights only. The friction hinges and keeps in this manual are not compatible with this section as standard.

Scale 1:1

Primary Visible Side - - - - - - - - - - - - - - - - - - Secondary Visible Side — · — · — · — · — · — · — · —

ETC344
Chamfered Reverse Adaptor

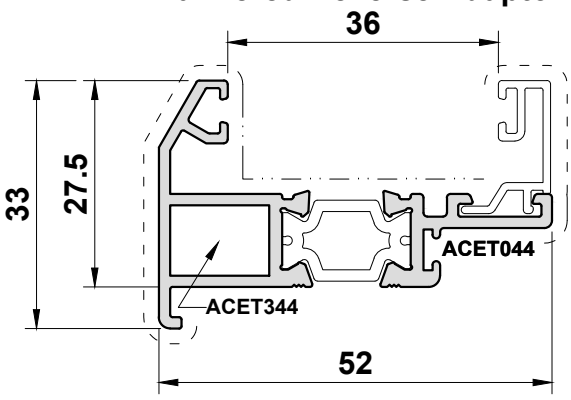

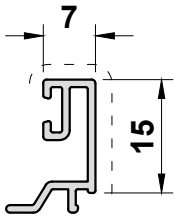

ETC372
(28mm Glazing)

ETC345
Flat Reverse Adaptor

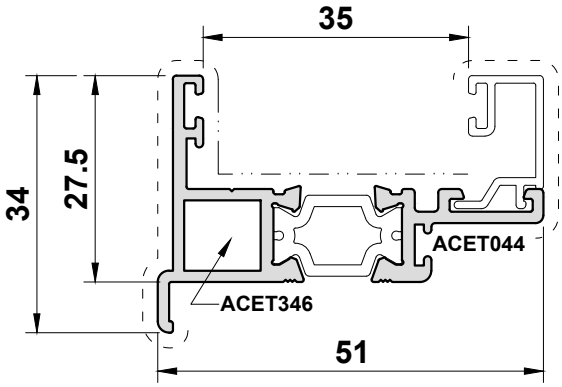

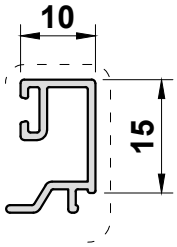

ETC373
(28mm Glazing)

ETC346N
Chamfered Reverse Adaptor

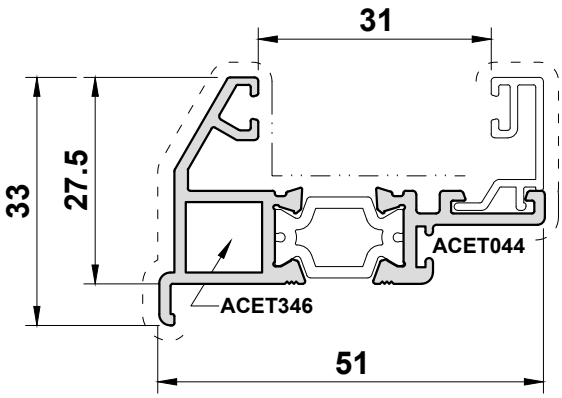

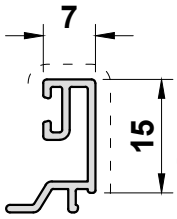

ETC372
(24mm Glazing)

Scale 1:1

Primary Visible Side - - - - - - - - - - - - - - - - - - Secondary Visible Side — · — · — · — · — · — · — · — · —

ETC343

Reverse Adaptor for Vents & Fixed Light

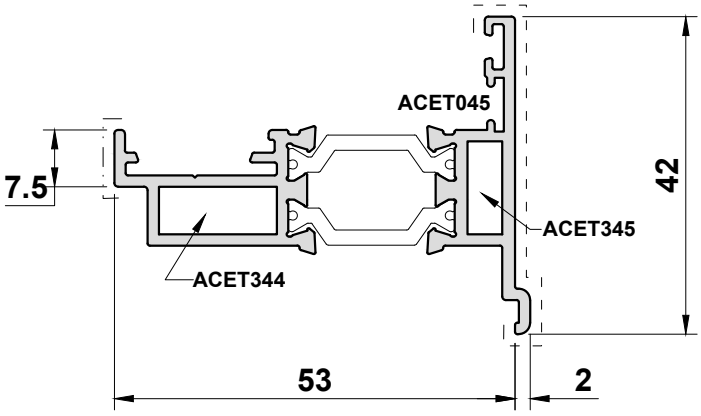

Scale 1:1

Primary Visible Side - - - - - - - - - - - - - - - - - - Secondary Visible Side — · — · — · — · — · — · — · —

24mm Glazing External

ETC150 ETC420
ETC302 ETC321
ETC303 ETC327
ETC304 ETC333
ETC305 ETC334
ETC306 ETC335
ETC336

ETC370

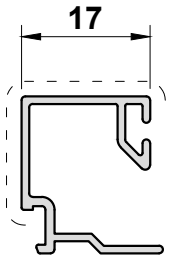

ETC364

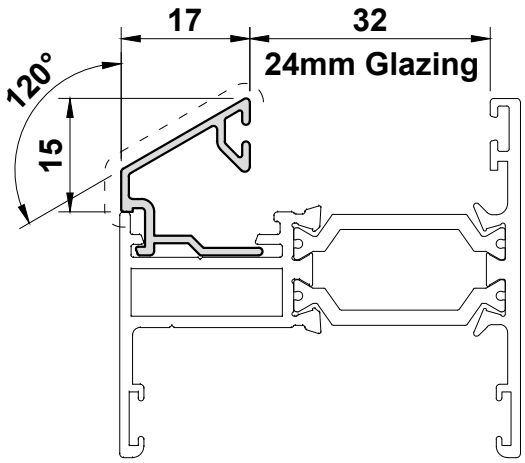

24mm Glazing Internal

ETC381 (square) or ETC378 (chamfered)

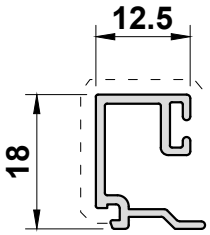

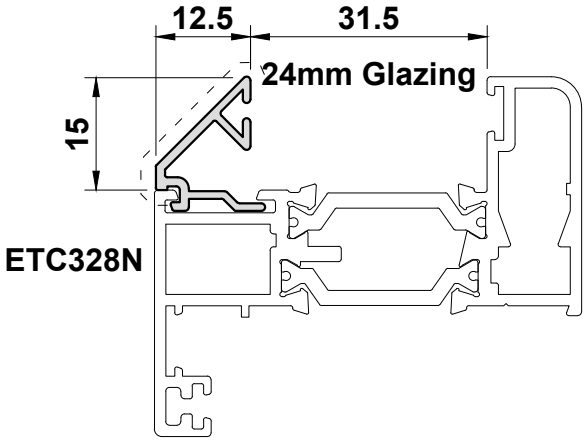

ETC367 (Square) or ETC273 (Curved)

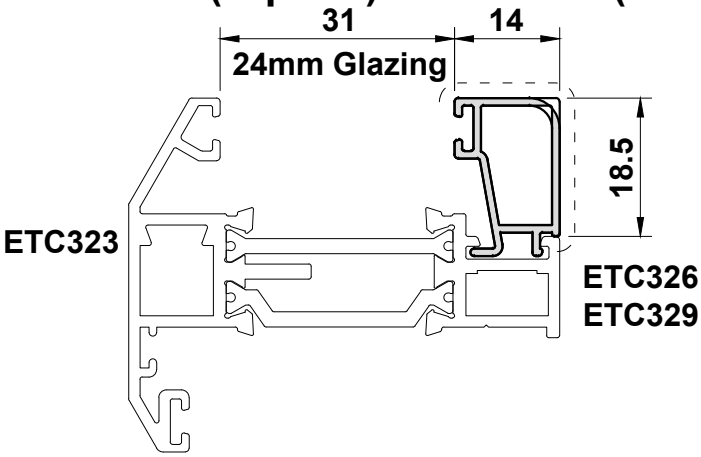

ETC374

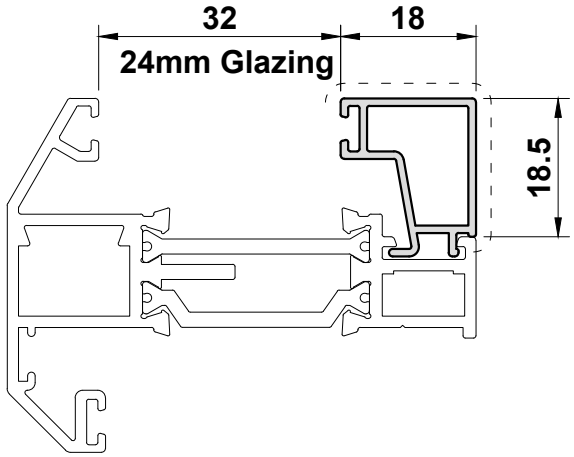

Scale 1:1

See Page E15 for Glazing Schedule

Primary Visible Side - - - - - - - - - - - - - - - - - - Secondary Visible Side — · · — · · — · · — · · — · · — · · — · · —

28mm Glazing External

ETC150 ETC420
ETC302 ETC321
ETC303 ETC327
ETC304 ETC333
ETC305 ETC334
ETC306 ETC335
ETC336

ETC375

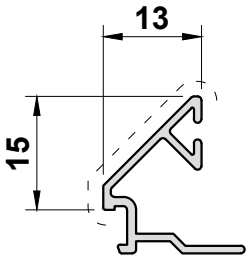

ETC371

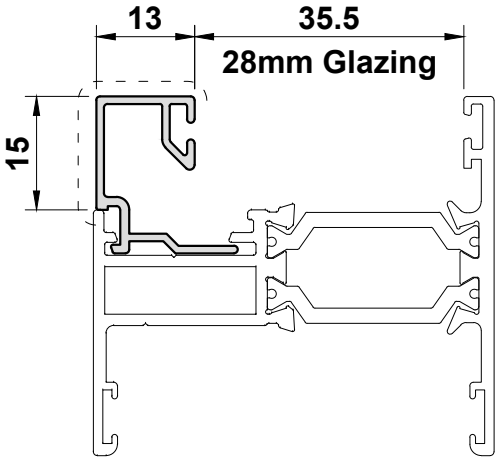

ETC366

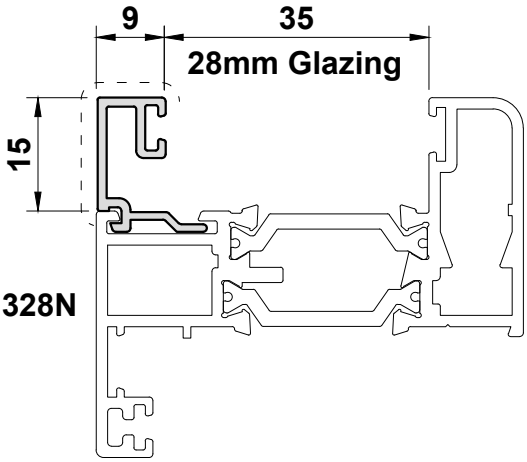

ETC328N

ETC370

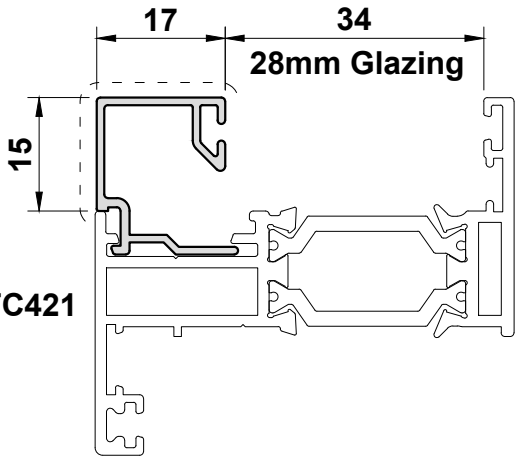

ETC421

28mm Glazing Internal

ETC367

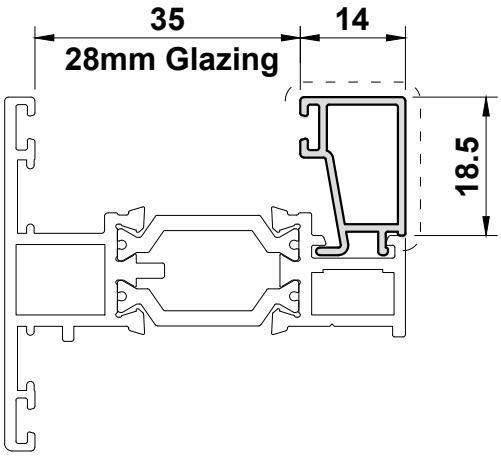

ETC273

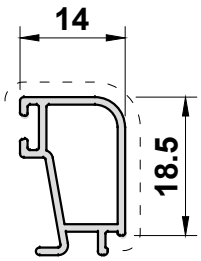

ETC324N
ETC423

See Page E16 for Glazing Schedule

Scale 1:1

Primary Visible Side - - - - - - - - - - - - - - - - - - Secondary Visible Side — · — · — · — · — · — · — · —

32mm Glazing External

ETC150 ETC420
ETC302 ETC321
ETC303 ETC327
ETC304 ETC333
ETC305 ETC334
ETC306 ETC335
ETC336

ETC379

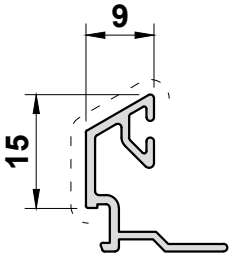

ETC377

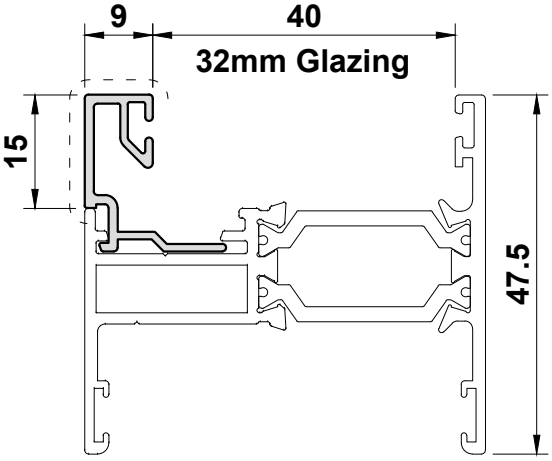

ETC376

36mm Flat Glazing Bead External

ETC150 ETC420
ETC302 ETC321
ETC303 ETC327
ETC304 ETC333
ETC305 ETC334
ETC306 ETC335
ETC336

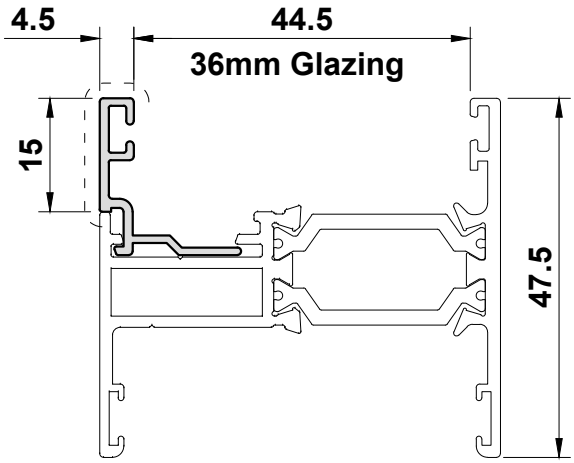

Scale 1:1

Primary Visible Side - - - - - - - - - - - - - - - - - - Secondary Visible Side — · — · — · — · — · — · — · —

ETC385

135° Bay Pole For 70mm Outer Frame

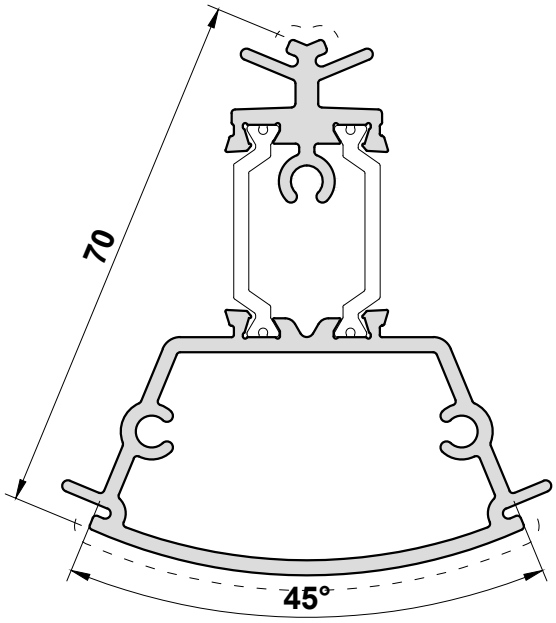

ETC150

Bay Pole Adaptor

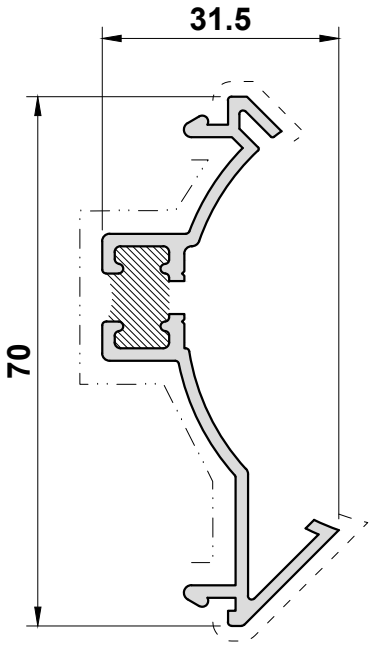

ETC869

Bay Pole

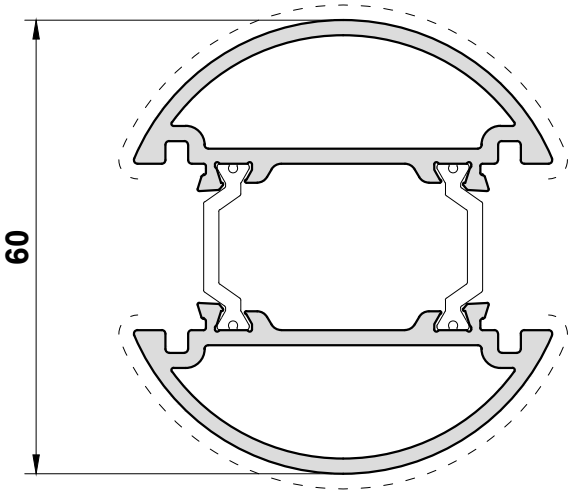

Note: ETC150 is NOT available in dual colour

Scale 1:1

Primary Visible Side - - - - - - - - - - - - - - - - - - Secondary Visible Side — · — · — · — · — · — · — · —

ETC048
70mm 90° Corner Post

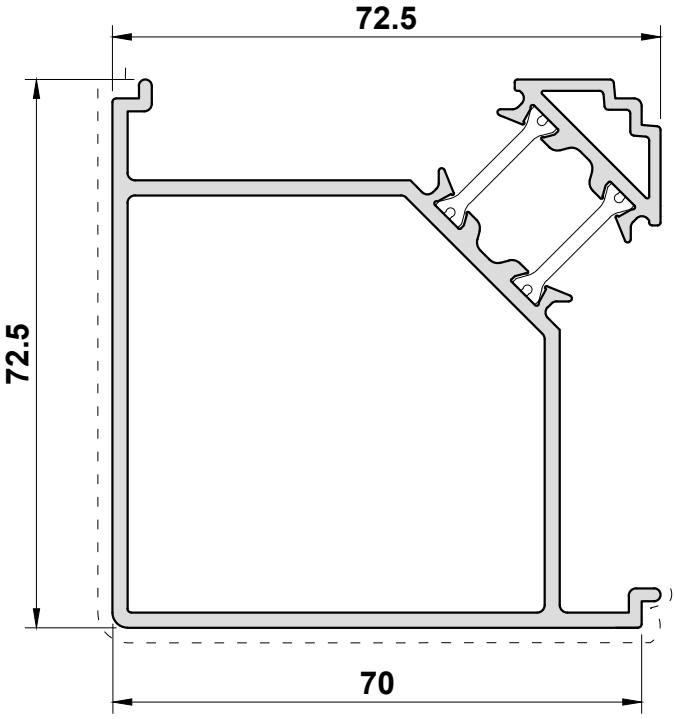

ETC347
90° Corner Post

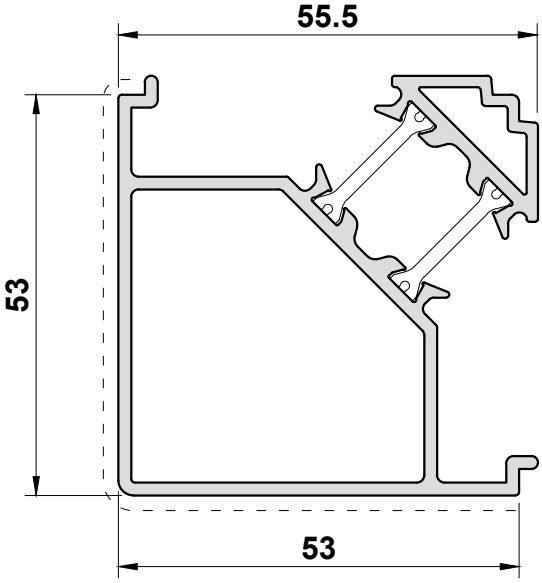

Scale 1:1

Primary Visible Side - - - - - - - - - - - - - - - - - - Secondary Visible Side — · — · — · — · — · — · — · —

ETC081
169° - 150°
Bay Pole Adaptor

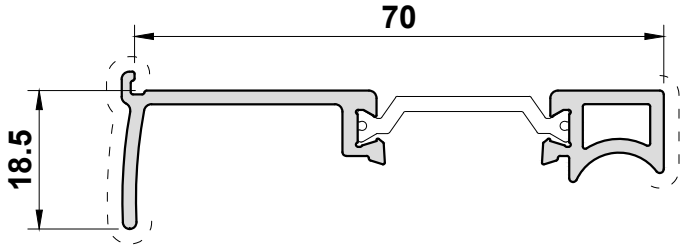

ETC080
Bay Pole

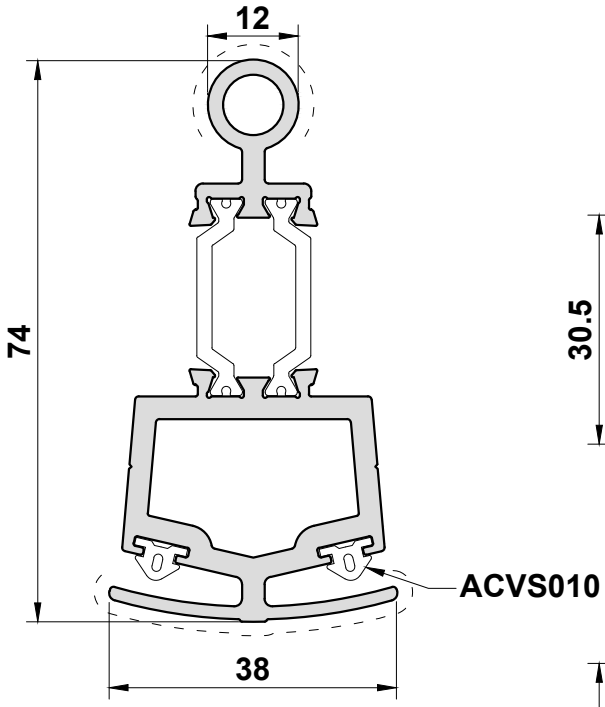

ETC082
149° - 130°
Bay Pole Adaptor

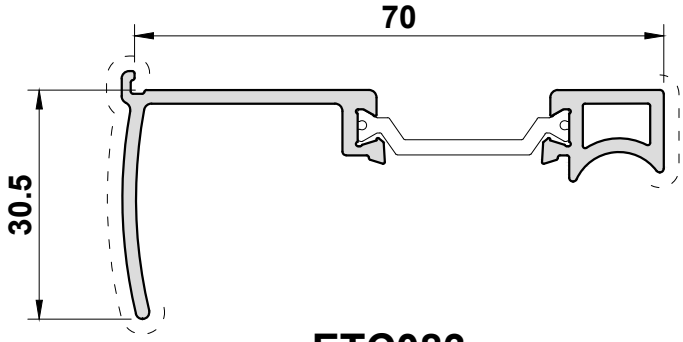

ETC083
129° - 115°
Bay Pole Adaptor

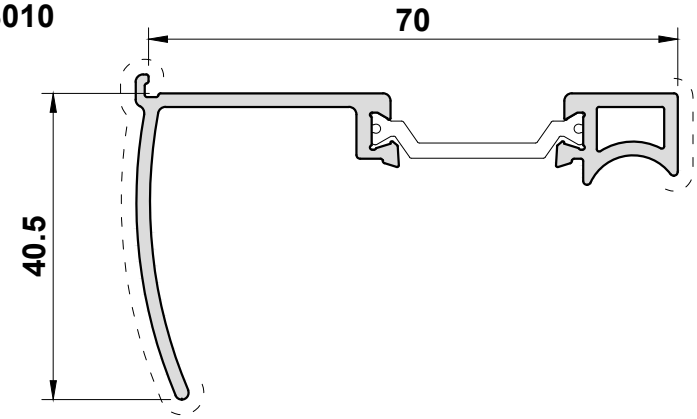

Scale 1:1

Primary Visible Side - - - - - - - - - - - - - - - - - - Secondary Visible Side — · — · — · — · — · — · — · —

ETC353
Coupler

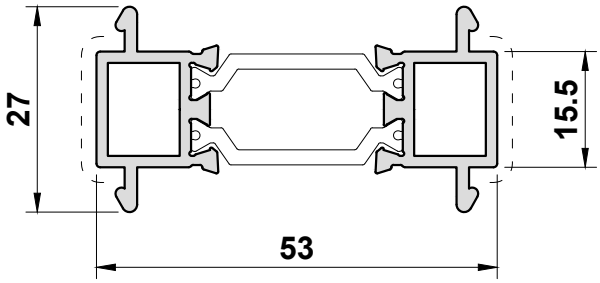

ETC356
Coupler

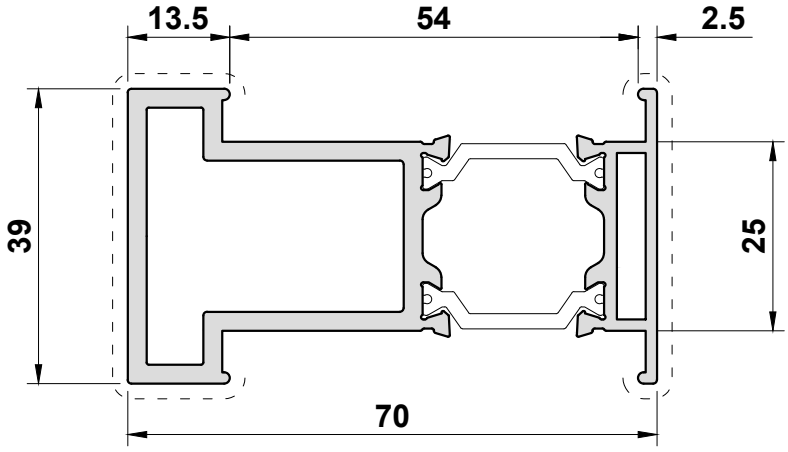

Scale 1:1

Primary Visible Side - - - - - - - - - - - - - - - - - - Secondary Visible Side — · — · — · — · — · — · — · —

ETC357
Coupler

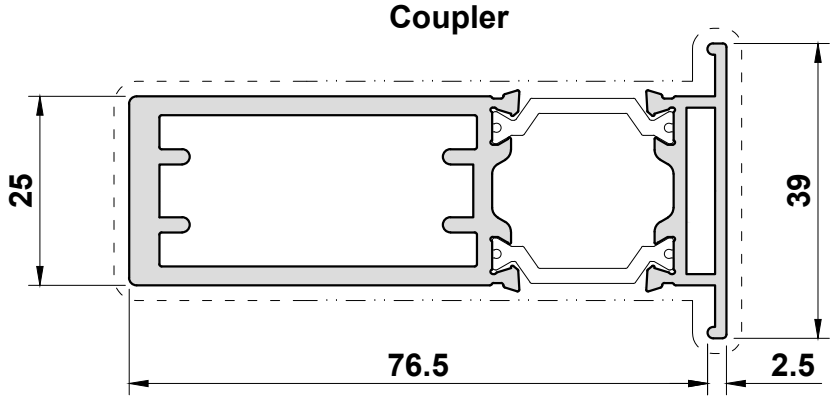

ETC853
Flush 70mm Coupler

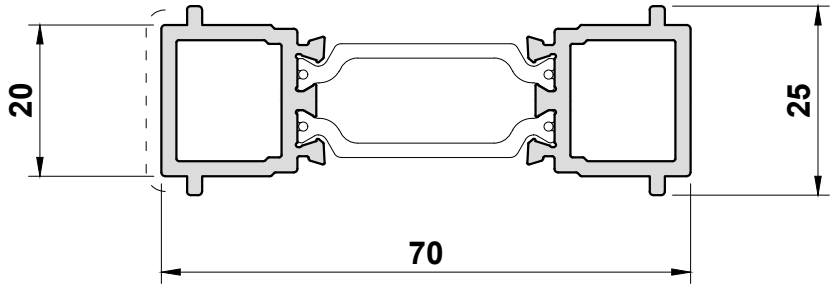

Scale 1:1

Primary Visible Side - - - - - - - - - - - - - - - - - - Secondary Visible Side — · — · — · — · — · — · — · —

DV515
70mm Head Extension

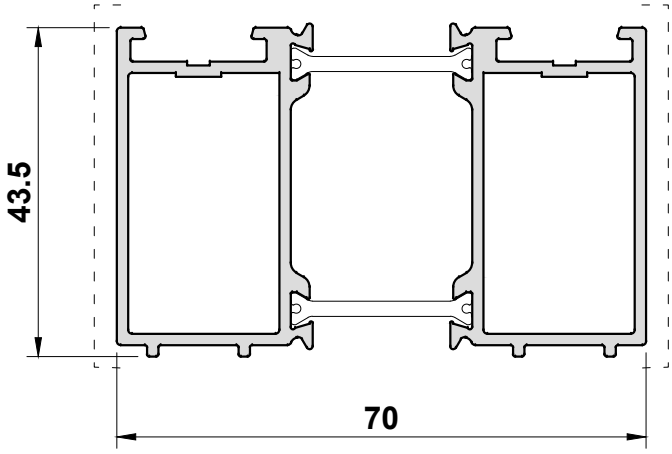

ETC352
Head Extension

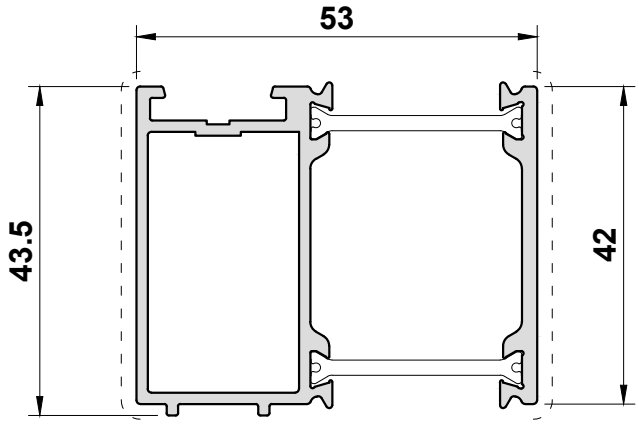

Scale 1:1

Primary Visible Side - - - - - - - - - - - - - - - - - - Secondary Visible Side — · — · — · — · — · — · — · —

ETC358
Head Extension

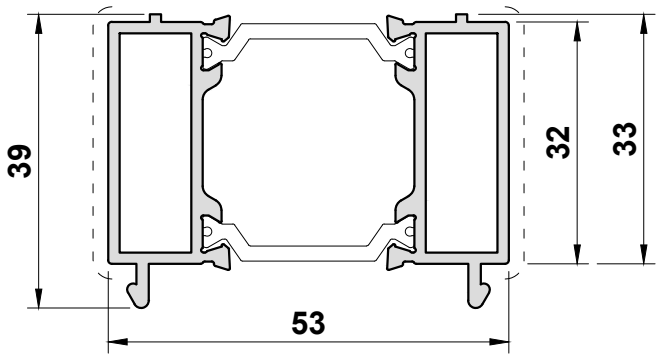

ETC559
20x70mm Frame Extension

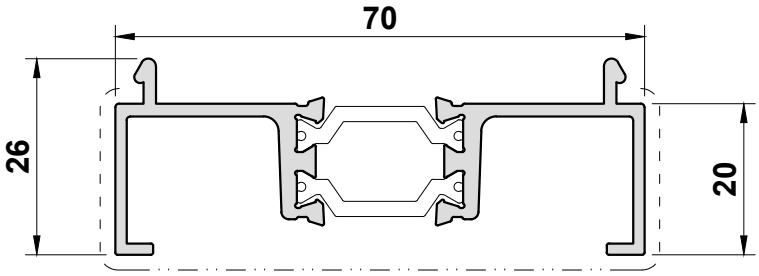

ETD057
20x70mm Universal Frame Extension

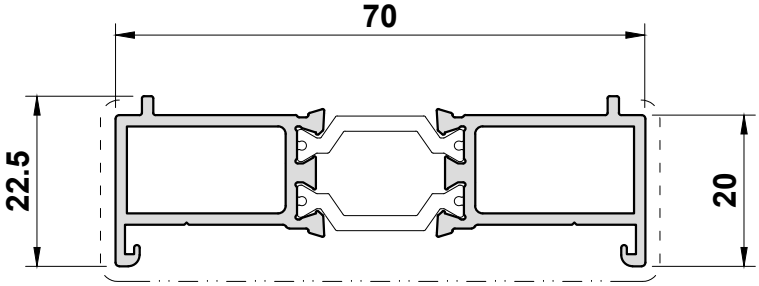

Scale 1:1

Primary Visible Side - - - - - - - - - - - - - - - - - - Secondary Visible Side — · — · — · — · — · — · — · —

ETC052
PVC Closer / Insert

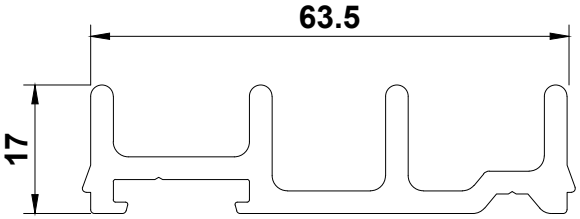

VL72
Drip / Weather Bar
End Caps: ACVL059

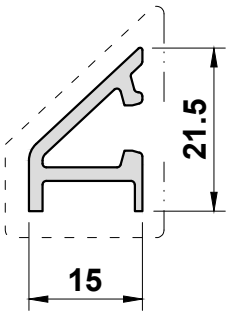

PCX41
PVC Infill

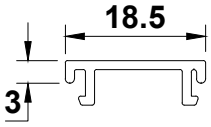

Scale 1:1

Primary Visible Side - - - - - - - - - - - - - - - - - - Secondary Visible Side — · — · — · — · — · — · — · —

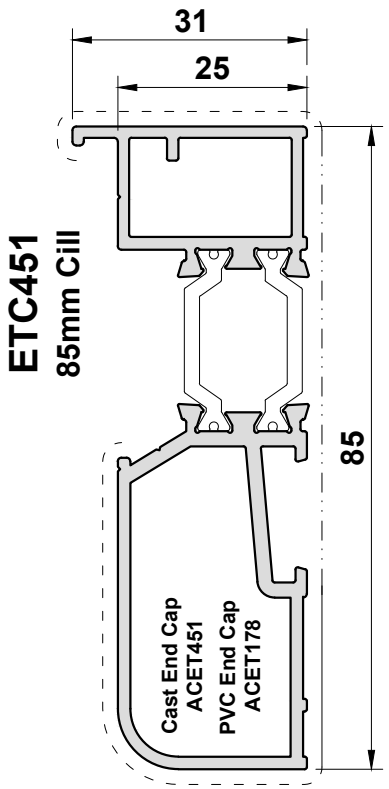

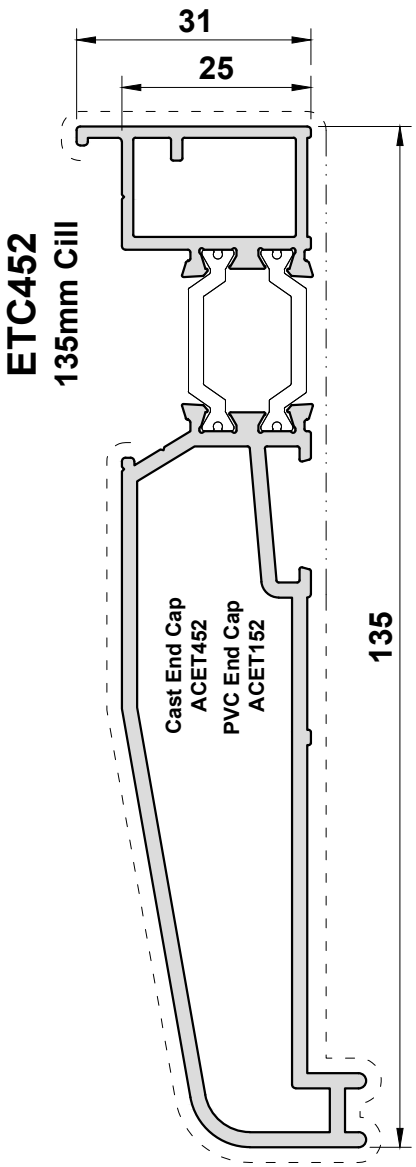

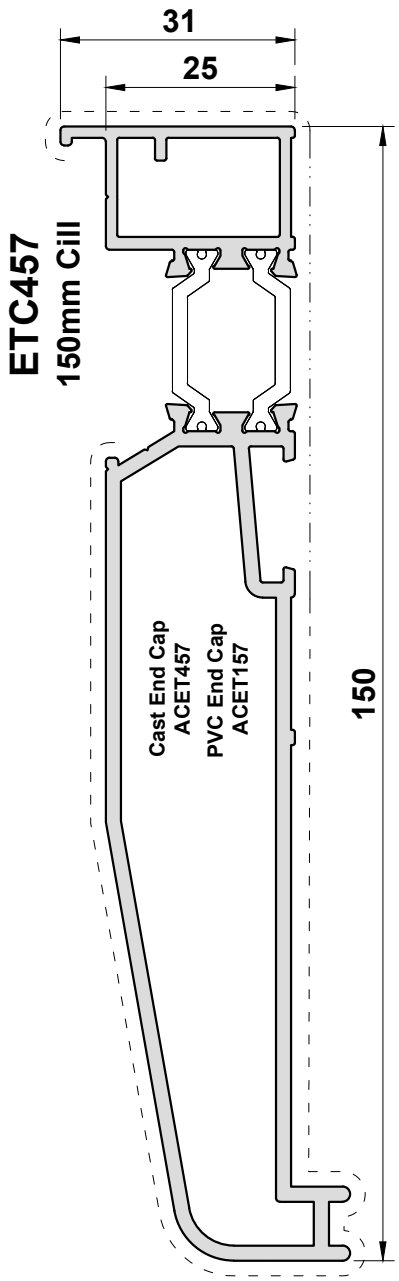

Scale 1:1

Primary Visible Side - - - - - - - - - - - - - - - - - - Secondary Visible Side — · — · — · — · — · — · — · —

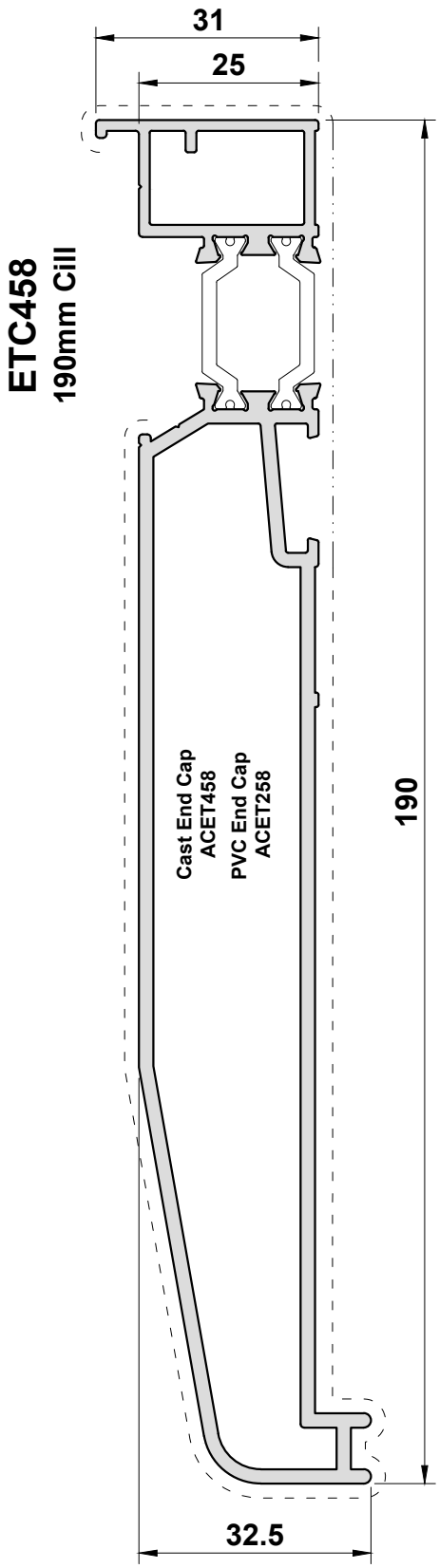

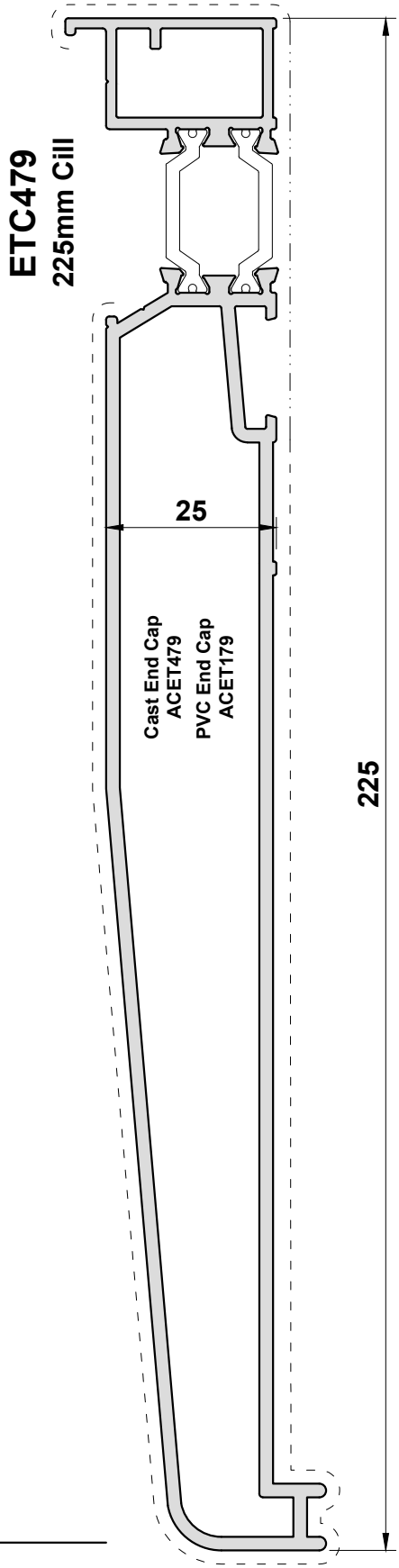

Scale 1:1

Primary Visible Side - - - - - - - - - - - - - - - - - - Secondary Visible Side — · — · — · — · — · — · — · —

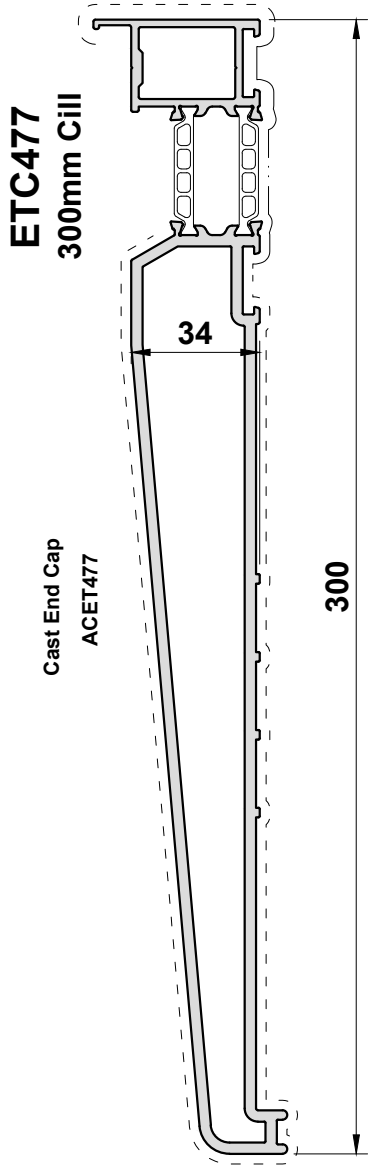

Scale 1:2

Section B

Accessories

Photos & Drawings

Image	Part Code	Pack	Unit	Application	Colour
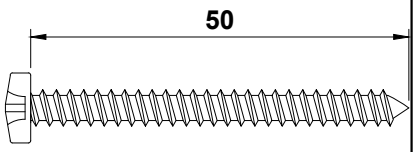	**ACDR052** **No. 10 x 50 S/S Self Tapping Pan Head Screw**	**200**	**pack**		MF ✓ SA KL HP BSC SMC PC W Z
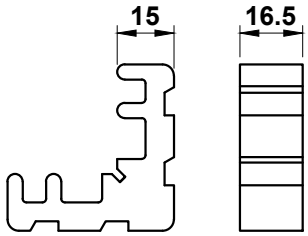	**ACET013** **Corner Cleat**	**24**	**pack**	**ETC424N**	MF ✓ SA KL HP BSC SMC PC W Z
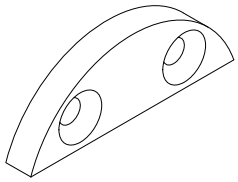	**ACET041** **Cill Nose Bracket S/S**	**1**	**each**	**ETC457** **ETC458** **ETC479**	MF ✓ SA KL HP BSC SMC PC W Z
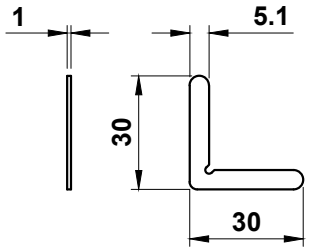	**ACET044** **Stainless Steel Chevron**	**100**	**pack**	**ETC323** **ETC344** **ETC345** **ETC346N**	MF ✓ SA KL HP BSC SMC PC W Z
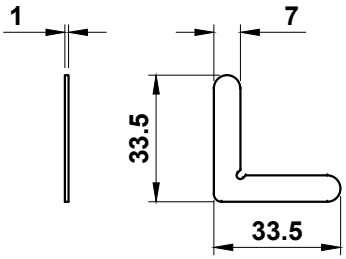	**ACET045** **Stainless Steel Chevron**	**100**	**pack**	**ETC302 ETC304** **ETC305 ETC306** **ETC308 ETC310** **ETC321 ETC326** **ETC327 ETC329** **ETC343 ETC420** **ETC423**	MF ✓ SA KL HP BSC SMC PC W Z

T-BARS
ACVG65=2.5mm
ACVG66=3.0mm
ACVL150=4.0mm

Screw (Grub)

MF	**= Mill Finish**	**W**	**= White**
SA	**= Silver Anodised**	**Z**	**= Black**
KL	**= Basic Colour**		
HP	**= Special Colour**		
BSC	**= Brushed Satin Chrome**		
SMC	**= Smokey Chrome**		
PC	**= Polished Chrome**		

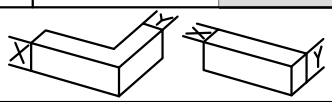

Image	Part Code	Pack	Unit	Application	Colour	
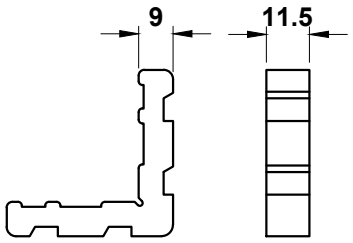	**ACET049** **Corner Cleat**	**24**	**pack**	**ETC324N**	MF	
					SA	
					KL	
					HP	
					BSC	
					SMC	
					PC	
					W	
					Z	
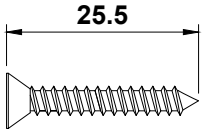	**ACET060** **No. 7 x 25 S/S Self Tapping CSK Screw**	**100**	**pack**		MF	✓
					SA	
					KL	
					HP	
					BSC	
					SMC	
					PC	
					W	
					Z	
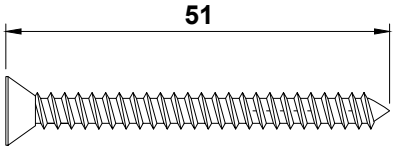	**ACET062** **No. 10 x 50 S/S Self Tapping CSK Screw**	**100**	**pack**		MF	✓
					SA	
					KL	
					HP	
					BSC	
					SMC	
					PC	
					W	
					Z	
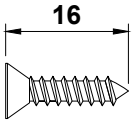	**ACET064** **No. 8 x 16 S/S Self Tapping Pan Head Screw**	**100**	**pack**	**Friction Hinges**	MF	✓
					SA	
					KL	
					HP	
					BSC	
					SMC	
					PC	
					W	
					Z	
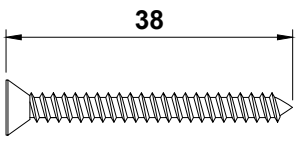	**ACET066** **No. 7 x 38 S/S Self Tapping CSK Screw**	**100**	**pack**		MF	✓
					SA	
					KL	
					HP	
					BSC	
					SMC	
					PC	
					W	
					Z	

T-BARS
ACVG65=2.5mm
ACVG66=3.0mm
ACVL150=4.0mm

Screw (Grub)

MF = Mill Finish
SA = Silver Anodised
KL = Basic Colour
HP = Special Colour
BSC = Brushed Satin Chrome
SMC = Smokey Chrome
PC = Polished Chrome
W = White
Z = Black

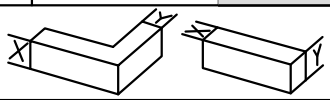

Image	Part Code	Pack	Unit	Application	Colour	
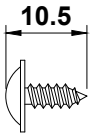	**ACET068** **No. 8 x 10 S/S Self Tapping Flange Screw**	**100**	**pack**	**Friction Hinges**	MF	✓
					SA	
					KL	
					HP	
					BSC	
					SMC	
					PC	
					W	
					Z	
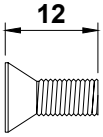	**ACET069** **M5 x 12 S/S CSK Machine Screw**	**100**	**pack**		MF	✓
					SA	
					KL	
					HP	
					BSC	
					SMC	
					PC	
					W	
					Z	
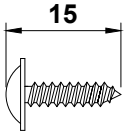	**ACET070** **No. 8 x 13 S/S Self Tapping Flange Screw**	**100**	**pack**	**Friction Hinges**	MF	✓
					SA	
					KL	
					HP	
					BSC	
					SMC	
					PC	
					W	
					Z	
	ACET080 **Cockspur Handle**	**1**	**each**	**ACET083**	MF	
					SA	✓
					KL	
					HP	
					BSC	
					SMC	
					PC	
					W	✓
					Z	✓
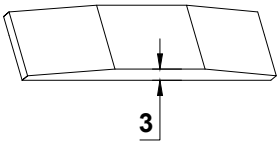	**ACET083** **3mm Wedge**	**100**	**pack**	**ACET080**	MF	
					SA	
					KL	
					HP	
					BSC	
					SMC	
					PC	
					W	✓
					Z	✓

T-BARS
ACVG65=2.5mm
ACVG66=3.0mm
ACVL150=4.0mm

Screw (Grub)

MF = Mill Finish
SA = Silver Anodised
KL = Basic Colour
HP = Special Colour
BSC = Brushed Satin Chrome
SMC = Smokey Chrome
PC = Polished Chrome
W = White
Z = Black

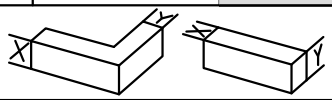

Image	Part Code	Pack	Unit	Application	Colour	
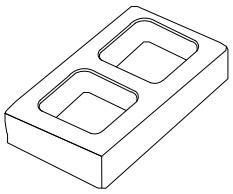	**ACET093** **Packers**	**25**	**pack**	**ETC344** **ETC345** **ETC346**	MF SA KL HP BSC SMC PC W Z	 ✓
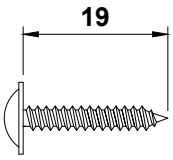	**ACET099** **No. 8 x 19 S/S Self Tapping Flange Screw**	**100**	**pack**	**Friction Hinges**	MF SA KL HP BSC SMC PC W Z	✓
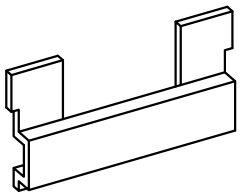	**ACET114** **Anti-Twist Clip**	**100**	**pack**	**ETC333**	MF SA KL HP BSC SMC PC W Z	✓
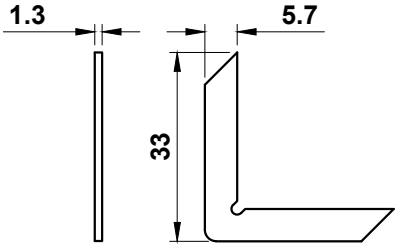	**ACET115** **Outer Frame Chevron - For Fixed Light Only**	**100**	**pack**		MF SA KL HP BSC SMC PC W Z	
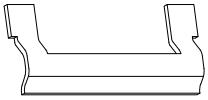	**ACET125** **Anti-Twist Clip**	**100**	**pack**	**ETC335**	MF SA KL HP BSC SMC PC W Z	✓

T-BARS
ACVG65=2.5mm
ACVG66=3.0mm
ACVL150=4.0mm

Screw (Grub)

MF = Mill Finish
SA = Silver Anodised
KL = Basic Colour
HP = Special Colour
BSC = Brushed Satin Chrome
SMC = Smokey Chrome
PC = Polished Chrome
W = White
Z = Black

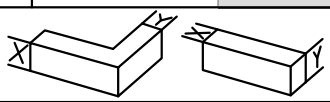

Image	Part Code	Pack	Unit	Application	Colour	
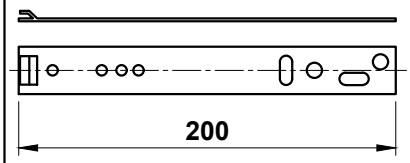	**ACET130** **Galvanised Steel Fixing Strap** **200mm x 25mm x 1.5mm**	**100**	**pack**	**ETC302** **ETC303** **ETC304** **ETC305** **ETC306** **ETC308** **ETC310** **ETC313**	MF SA KL HP BSC SMC PC W Z	✓
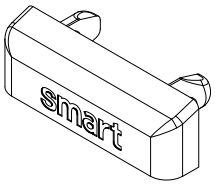	**ACET131** **Drainage Cover Cap** **For colour matched drainage caps, please order ACET431**	**100**	**pack**		MF SA KL HP BSC SMC PC W Z	 ✓ ✓
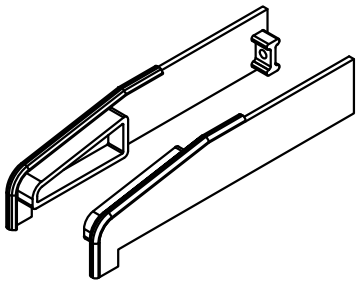	**ACET152** **Cill End Cap (pair)**	**10**	**pair**	**ACET452**	MF SA KL HP BSC SMC PC W Z	 ✓ ✓
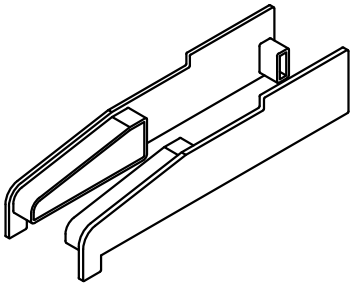	**ACET157** **Cill End Cap (pair)**	**10**	**pair**	**ETC457**	MF SA KL HP BSC SMC PC W Z	 ✓ ✓
	ACET165 **Espagnolette Handle 9mm Spindle**	**1**	**each**	**Shootbolt Locking**	MF SA KL HP BSC SMC PC W Z	 ✓ ✓

T-BARS
ACVG65=2.5mm
ACVG66=3.0mm
ACVL150=4.0mm

Screw (Grub)

MF	**= Mill Finish**	**W**	**= White**
SA	**= Silver Anodised**	**Z**	**= Black**
KL	**= Basic Colour**		
HP	**= Special Colour**		
BSC	**= Brushed Satin Chrome**		
SMC	**= Smokey Chrome**		
PC	**= Polished Chrome**		

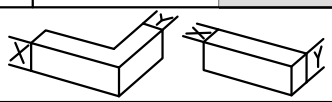

Image	Part Code	Pack	Unit	Application	Colour	
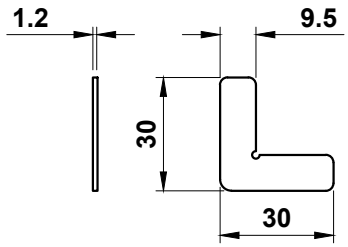	**ACET171** **Stainless Steel Chevron**	**100**	**pack**	**ETC324**	MF	✓
					SA	
					KL	
					HP	
					BSC	
					SMC	
					PC	
					W	
					Z	
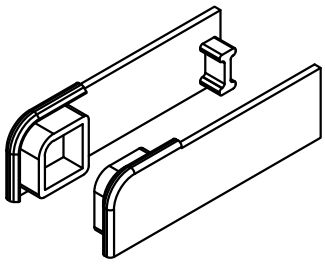	**ACET178** **Cill End Cap (pair)**	**10**	**pair**	**ETC451**	MF	
					SA	
					KL	
					HP	
					BSC	
					SMC	
					PC	
					W	✓
					Z	✓
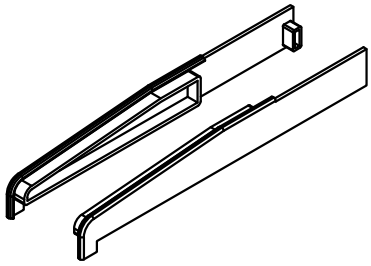	**ACET179** **Cill End Cap (pair)**	**10**	**pair**	**ETC479**	MF	
					SA	
					KL	
					HP	
					BSC	
					SMC	
					PC	
					W	✓
					Z	✓
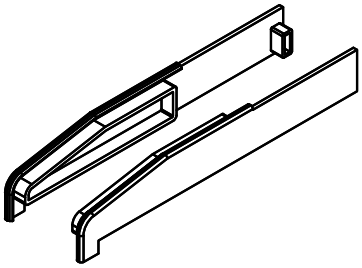	**ACET258** **Cill End Cap (pair)**	**10**	**pair**	**ETC458**	MF	
					SA	
					KL	
					HP	
					BSC	
					SMC	
					PC	
					W	✓
					Z	✓
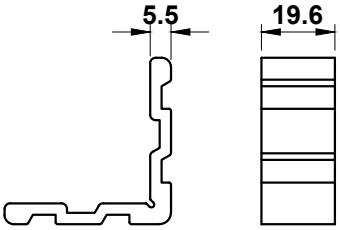	**ACET310** **Corner Cleat**	**24**	**pack**	**ETC302** **ETC303** **ETC304** **ETC305** **ETC306** **ETC308** **ETC310** **ETC313** **ETC420** **ETC423**	MF	✓
					SA	
					KL	
					HP	
					BSC	
					SMC	
					PC	
					W	
					Z	

T-BARS
ACVG65=2.5mm
ACVG66=3.0mm
ACVL150=4.0mm

Screw (Grub)

MF = Mill Finish
SA = Silver Anodised
KL = Basic Colour
HP = Special Colour
BSC = Brushed Satin Chrome
SMC = Smokey Chrome
PC = Polished Chrome
W = White
Z = Black

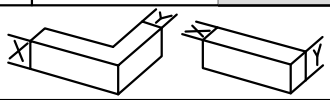

Image	Part Code	Pack	Unit	Application	Colour
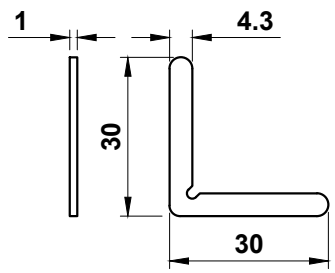	**ACET311** **Stainless Steel Chevron**	**50**	**pack**	**ETC302** **ETC303** **ETC304** **ETC305** **ETC306** **ETC313** **ETC420**	MF ✓ SA KL HP BSC SMC PC W Z
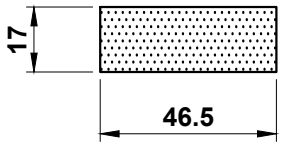	**ACET312** **Foam Infill** **1250mm Lengths**	**1**	**each**	**ETC310**	MF SA KL HP BSC SMC PC W Z
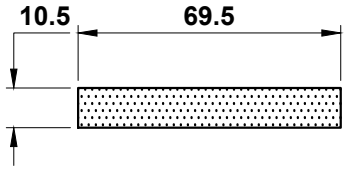	**ACET314** **Foam Infill** **1250mm Lengths**	**1**	**each**		MF SA KL HP BSC SMC PC W Z
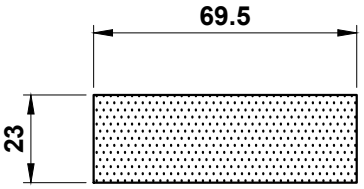	**ACET315** **Foam Infill** **1250mm Lengths**	**1**	**each**		MF SA KL HP BSC SMC PC W Z
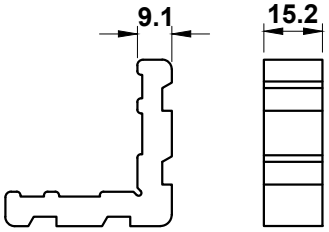	**ACET316** **Cleat**	**1**	**each**	**ETC302** **ETC304** **ETC305**	MF SA KL HP BSC SMC PC W Z

T-BARS
ACVG65=2.5mm
ACVG66=3.0mm
ACVL150=4.0mm

Screw (Grub)

MF	**= Mill Finish**	**W**	**= White**
SA	**= Silver Anodised**	**Z**	**= Black**
KL	**= Basic Colour**		
HP	**= Special Colour**		
BSC	**= Brushed Satin Chrome**		
SMC	**= Smokey Chrome**		
PC	**= Polished Chrome**		

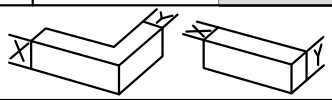

Image	Part Code	Pack	Unit	Application	Colour	
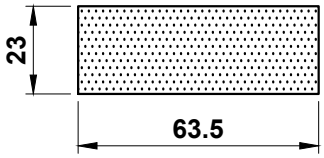	**ACET317** **Foam Infill** **1250mm Lengths**	**1**	**each**	**ETC303**	MF	
					SA	
					KL	
					HP	
					BSC	
					SMC	
					PC	
					W	
					Z	
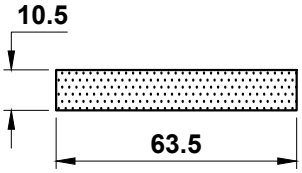	**ACET318** **Foam Infill** **1250mm Lengths**	**1**	**each**	**ETC305**	MF	
					SA	
					KL	
					HP	
					BSC	
					SMC	
					PC	
					W	
					Z	
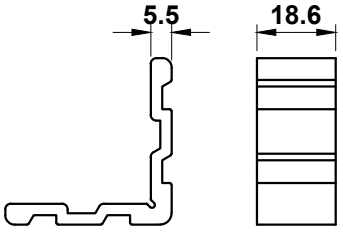	**ACET321** **Outer Corner Cleat**	**24**	**pack**	**ETC321** **ETC327**	MF	✓
					SA	
					KL	
					HP	
					BSC	
					SMC	
					PC	
					W	
					Z	
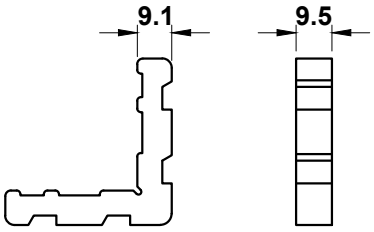	**ACET322** **Outer Corner Cleat**	**24**	**pack**	**ETC323**	MF	✓
					SA	
					KL	
					HP	
					BSC	
					SMC	
					PC	
					W	
					Z	
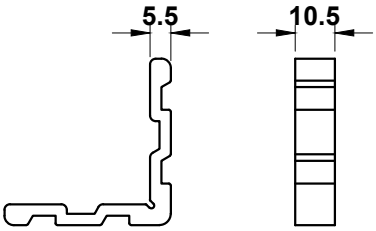	**ACET323** **Inner Corner Cleat**	**24**	**pack**	**ETC323** **ETC324** **ETC326** **ETC329**	MF	✓
					SA	
					KL	
					HP	
					BSC	
					SMC	
					PC	
					W	
					Z	

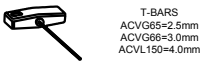

MF = Mill Finish
SA = Silver Anodised
KL = Basic Colour
HP = Special Colour
BSC = Brushed Satin Chrome
SMC = Smokey Chrome
PC = Polished Chrome
W = White
Z = Black

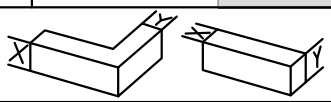

Image	Part Code	Pack	Unit	Application	Colour	
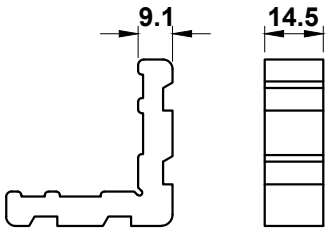	**ACET326** **Corner Cleat**	**24**	**pack**	**ETC326** **ETC329**	MF	✓
					SA	
					KL	
					HP	
					BSC	
					SMC	
					PC	
					W	
					Z	
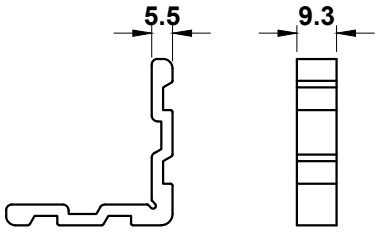	**ACET327** **Inner Corner Cleat**	**24**	**pack**	**ETC321** **ETC327** **ETC328N**	MF	✓
					SA	
					KL	
					HP	
					BSC	
					SMC	
					PC	
					W	
					Z	
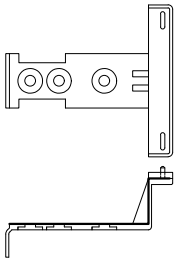	**ACET332** **Transom End Cap for French Casement**	**10**	**pack**	**ETC333**	MF	
					SA	
					KL	
					HP	
					BSC	
					SMC	
					PC	
					W	✓
					Z	✓
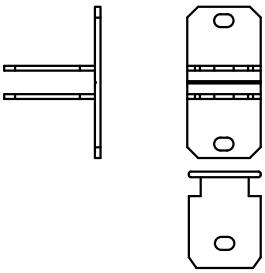	**ACET333** **Cruciform Block**	**10**	**pack**	**ETC333**	MF	✓
					SA	
					KL	
					HP	
					BSC	
					SMC	
					PC	
					W	
					Z	
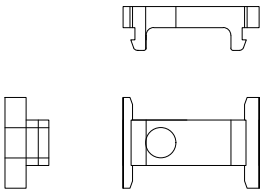	**ACET334** **Transom Locator Block**	**100**	**pack**	**ETC333**	MF	
					SA	
					KL	
					HP	
					BSC	
					SMC	
					PC	
					W	
					Z	✓

T-BARS
ACVG65=2.5mm
ACVG66=3.0mm
ACVL150=4.0mm

Screw (Grub)

MF	**= Mill Finish**	**W**	**= White**
SA	**= Silver Anodised**	**Z**	**= Black**
KL	**= Basic Colour**		
HP	**= Special Colour**		
BSC	**= Brushed Satin Chrome**		
SMC	**= Smokey Chrome**		
PC	**= Polished Chrome**		

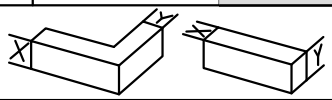

Image	Part Code	Pack	Unit	Application	Colour	
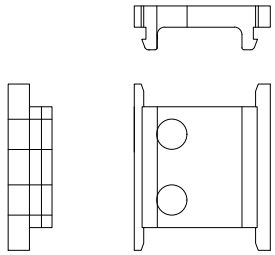	**ACET335** **Transom Locator Block**	**100**	**pack**	**ETC335**	MF	
					SA	
					KL	
					HP	
					BSC	
					SMC	
					PC	
					W	
					Z	✓
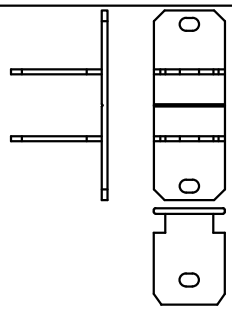	**ACET336** **Cruciform Block**	**10**	**pack**	**ETC335**	MF	✓
					SA	
					KL	
					HP	
					BSC	
					SMC	
					PC	
					W	
					Z	
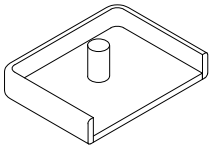	**ACET339** **End Cap**	**50**	**pack**	**ETC336**	MF	
					SA	
					KL	
					HP	
					BSC	
					SMC	
					PC	
					W	
					Z	✓
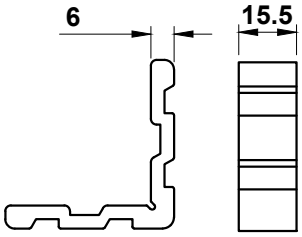	**ACET343** **Corner Cleat**	**24**	**pack**	**ETC343**	MF	
					SA	
					KL	
					HP	
					BSC	
					SMC	
					PC	
					W	
					Z	
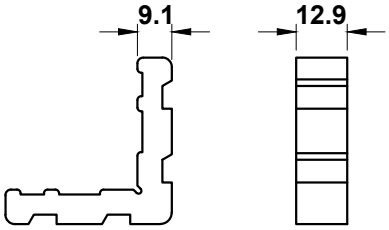	**ACET344** **Corner Cleat**	**24**	**pack**	**ETC344**	MF	✓
					SA	
					KL	
					HP	
					BSC	
					SMC	
					PC	
					W	
					Z	

T-BARS
ACVG65=2.5mm
ACVG66=3.0mm
ACVL150=4.0mm

Screw (Grub)

MF = Mill Finish
SA = Silver Anodised
KL = Basic Colour
HP = Special Colour
BSC = Brushed Satin Chrome
SMC = Smokey Chrome
PC = Polished Chrome
W = White
Z = Black

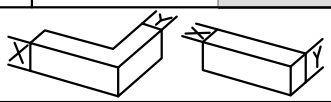

Image	Part Code	Pack	Unit	Application	Colour	
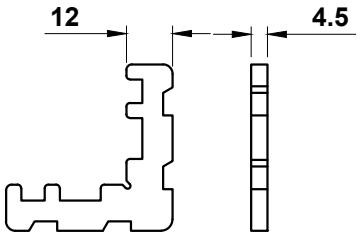	**ACET345** **Corner Cleat**	**24**	**pack**	**ETC343**	MF	
					SA	
					KL	
					HP	
					BSC	
					SMC	
					PC	
					W	
					Z	
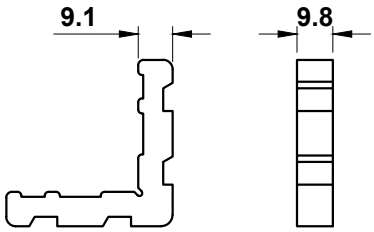	**ACET346** **Corner Cleat**	**24**	**pack**	**ETC345** **ETC346N**	MF	✓
					SA	
					KL	
					HP	
					BSC	
					SMC	
					PC	
					W	
					Z	
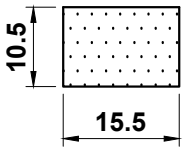	**ACET355** **Foam Infill** **1250mm Lengths**	**1**	**each**	**ETC302** **ETC303** **ETC304** **ETC305** **ETC306** **ETC308** **ETC310** **ETC313** **ETC420**	MF	
					SA	
					KL	
					HP	
					BSC	
					SMC	
					PC	
					W	
					Z	
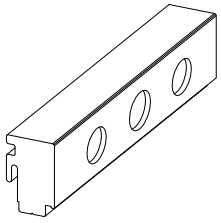	**ACET365** **Espag. Handle Fixing** **Block (94mm)**	**1**	**each**	**ACET165** **ETC323** **ETC324** **ETC326** **ETC329** **ETC367**	MF	✓
					SA	
					KL	✓
					HP	✓
					BSC	
					SMC	
					PC	
					W	✓
					Z	✓
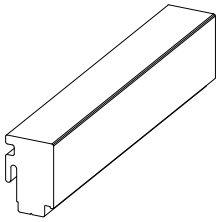	**ACET366** **Cockspur Handle Fixing** **Block (94mm)**	**1**	**each**	**ACET080** **ETC323** **ETC324** **ETC326** **ETC329** **ETC367**	MF	✓
					SA	
					KL	✓
					HP	✓
					BSC	
					SMC	
					PC	
					W	✓
					Z	✓

T-BARS
ACVG65=2.5mm
ACVG66=3.0mm
ACVL150=4.0mm

Screw (Grub)

MF	**= Mill Finish**	**W**	**= White**
SA	**= Silver Anodised**	**Z**	**= Black**
KL	**= Basic Colour**		
HP	**= Special Colour**		
BSC	**= Brushed Satin Chrome**		
SMC	**= Smokey Chrome**		
PC	**= Polished Chrome**		

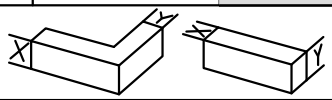

Image	Part Code	Pack	Unit	Application	Colour	
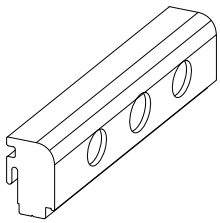	**ACET367** **Curved Espag. Handle Fixing Block (94mm)**	**1**	**each**	**ACET165 ETC323 ETC324 ETC326 ETC329 ETC367**	MF SA KL HP BSC SMC PC W Z	✓ ✓ ✓ ✓ ✓
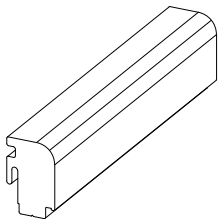	**ACET368** **Curved Cockspur Handle Fixing Block (94mm)**	**1**	**each**	**ACET165 ETC323 ETC324 ETC326 ETC329 ETC367**	MF SA KL HP BSC SMC PC W Z	 ✓ ✓ ✓ ✓
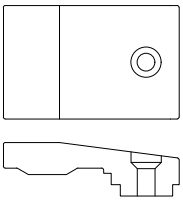	**ACET380** **Run Up Block**	**100**	**pack**		MF SA KL HP BSC SMC PC W Z	 ✓ ✓
	ACET388 **Punch**	**1**	**each**	**ETC423**	MF SA KL HP BSC SMC PC W Z	
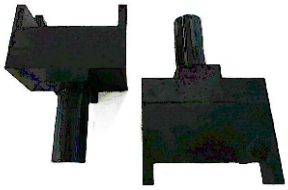	**ACET389** **Punches For ETC302 / 303 / 304 / 305 / 306**	**1**	**pair**		MF SA KL HP BSC SMC PC W Z	

T-BARS
ACVG65=2.5mm
ACVG66=3.0mm
ACVL150=4.0mm

Screw (Grub)

MF = Mill Finish
SA = Silver Anodised
KL = Basic Colour
HP = Special Colour
BSC = Brushed Satin Chrome
SMC = Smokey Chrome
PC = Polished Chrome
W = White
Z = Black

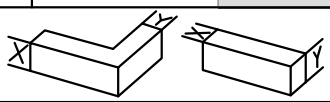

Image	Part Code	Pack	Unit	Application	Colour
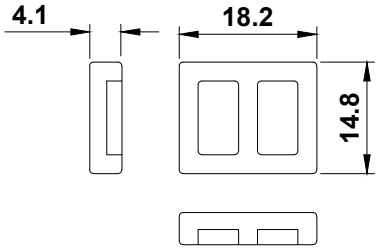	**ACET393** **Packer for ETC346**	**25**	**pack**	**ETC344** **ETC345** **ETC346**	MF SA KL HP BSC SMC PC W Z ✓
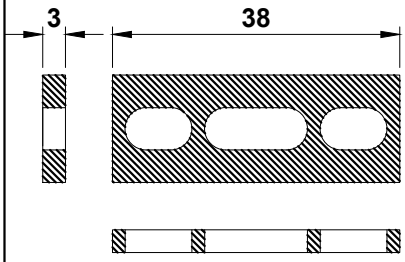	**ACET394** **Stay Packer**	**25**	**pack**	**ETC303** **ETC304** **ETC305** **ETC306** **ETC310** **ETC313**	MF SA KL HP BSC SMC PC W Z ✓
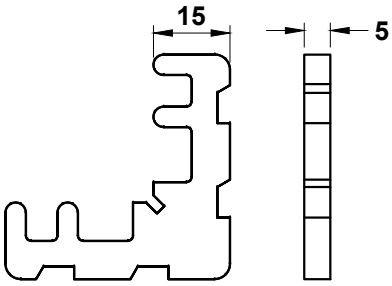	**ACET424** **Cleat For Outer Chamber**	**24**	**pack**	**ETC424N**	MF SA KL HP BSC SMC PC W Z
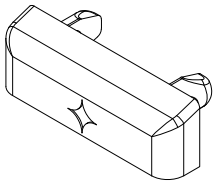	**ACET431** **Drainage Cover Cap** **Colour matched drainage caps**	**8**	**pack**		MF SA KL ✓ HP ✓ BSC SMC PC W Z
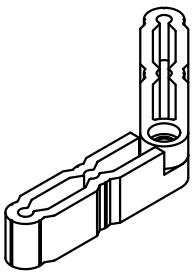	**ACET440** **Variable Cill Angle Bracket**	**10**	**Each**		MF SA KL HP BSC SMC PC W Z

T-BARS
ACVG65=2.5mm
ACVG66=3.0mm
ACVL150=4.0mm

Screw (Grub)

MF = Mill Finish
SA = Silver Anodised
KL = Basic Colour
HP = Special Colour
BSC = Brushed Satin Chrome
SMC = Smokey Chrome
PC = Polished Chrome
W = White
Z = Black

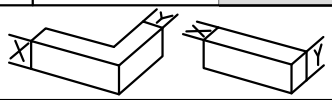

Image	Part Code	Pack	Unit	Application	Colour	
	ACET460 **Inline Espag Handle with 9mm Spindle**	**1**	**Each**	**ACET801** **ACET802** **ACET803** **ACET804** **ACET805**	MF SA KL HP BSC SMC PC W Z	 ✓ ✓ ✓ ✓ ✓ ✓ ✓
	ACET461 **Inline Espag Handle with 15mm Spindle**	**1**	**Each**	**ACET861** **ACET862** **ACET863** **ACET864** **ACET865** **ACET866**	MF SA KL HP BSC SMC PC W Z	 ✓ ✓ ✓ ✓ ✓ ✓ ✓
	ACET465 L/R **Cranked Espag Handle with 9mm Spindle**	**1**	**Each**	**ACET801** **ACET802** **ACET803** **ACET804** **ACET805**	MF SA KL HP BSC SMC PC W Z	 ✓ ✓ ✓ ✓ ✓ ✓ ✓
	ACET466 L/R **Cranked Espag Handle with 15mm Spindle**	**1**	**Each**	**ACET861** **ACET862** **ACET863** **ACET864** **ACET865** **ACET866**	MF SA KL HP BSC SMC PC W Z	 ✓ ✓ ✓ ✓ ✓ ✓ ✓
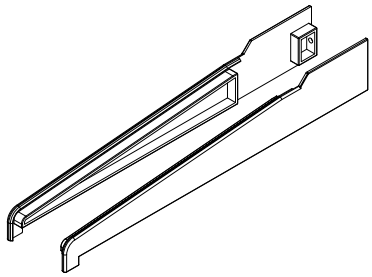	**ACET477** **Cast Cill End Caps**	**1**	**Pair**	**ETC477**	MF SA KL HP BSC SMC PC W Z	✓ ✓ ✓

T-BARS
ACVG65=2.5mm
ACVG66=3.0mm
ACVL150=4.0mm

Screw (Grub)

MF = Mill Finish
SA = Silver Anodised
KL = Basic Colour
HP = Special Colour
BSC = Brushed Satin Chrome
SMC = Smokey Chrome
PC = Polished Chrome
W = White
Z = Black

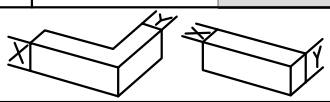

Image	Part Code	Pack	Unit	Application	Colour
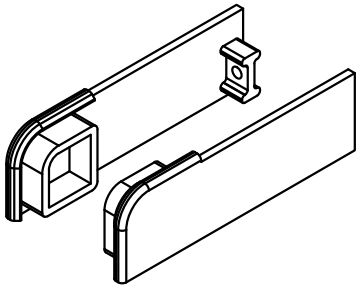	**ACET451** **Cast Cill End Caps**	**1**	**pair**	**ETC451**	MF SA KL HP BSC SMC PC W Z
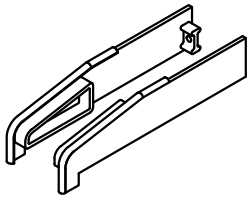	**ACET452** **Cast Cill End Caps**	**1**	**pair**	**ETC452**	MF SA KL HP BSC SMC PC W Z
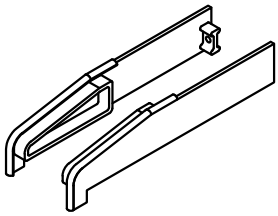	**ACET457** **Cast Cill End Caps**	**1**	**pair**	**ETC457**	MF SA KL HP BSC SMC PC W Z
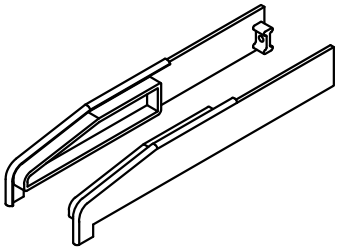	**ACET458** **Cast Cill End Caps**	**1**	**pair**	**ETC458**	MF SA KL HP BSC SMC PC W Z
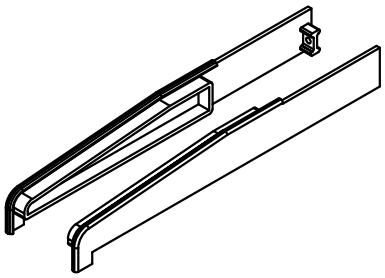	**ACET479** **Cast Cill End Caps**	**1**	**pair**	**ETC479**	MF SA KL HP BSC SMC PC W Z

T-BARS
ACVG65=2.5mm
ACVG66=3.0mm
ACVL150=4.0mm

Screw (Grub)

MF = Mill Finish
SA = Silver Anodised
KL = Basic Colour
HP = Special Colour
BSC = Brushed Satin Chrome
SMC = Smokey Chrome
PC = Polished Chrome
W = White
Z = Black

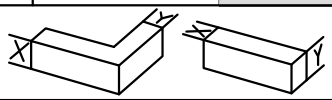

Image	Part Code	Pack	Unit	Application	Colour	
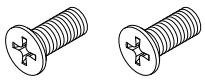	**ACET495** **1 pack contains:** **2no M5 x 12 S/S CSK Machine Screw**	**1**	**pack**	**ACET460** **ACET465**	MF SA KL HP BSC SMC PC W Z	
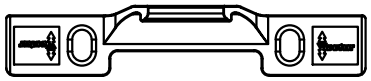	**ACET513** **Cavity Hinge Protectors**	**50**	**sets**		MF SA KL HP BSC SMC PC W Z	
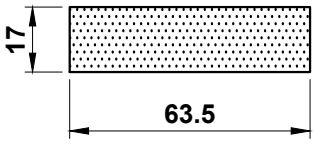	**ACET619** **Foam Infill** **1250mm Lengths**	**1**	**each**	**ETC302** **ETC304** **ETC306**	MF SA KL HP BSC SMC PC W Z	
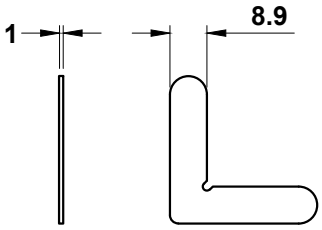	**ACET824** **Chevron**	**24**	**pack**	**ETC324** **ETC328N** **ETC423**	MF ✓ SA KL HP BSC SMC PC W Z	
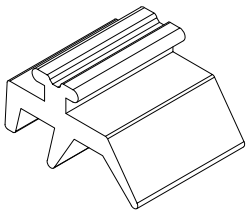	**ACET835** **Low Line External Gasket**	**200**	**m**	**ETC364** **ETC370** **ETC371** **ETC375**	MF SA KL HP BSC SMC PC W Z ✓	

T-BARS
ACVG65=2.5mm
ACVG66=3.0mm
ACVL150=4.0mm

Screw (Grub)

MF	**= Mill Finish**	**W**	**= White**
SA	**= Silver Anodised**	**Z**	**= Black**
KL	**= Basic Colour**		
HP	**= Special Colour**		
BSC	**= Brushed Satin Chrome**		
SMC	**= Smokey Chrome**		
PC	**= Polished Chrome**		

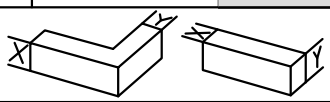

Image	Part Code	Pack	Unit	Application	Colour	
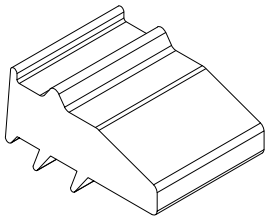	**ACET840** **5mm Low Line Internal Wedge Gasket**	**150**	**m**	**ETC310** **ETC364**	MF	
					SA	
					KL	
					HP	
					BSC	
					SMC	
					PC	
					W	
					Z	✓
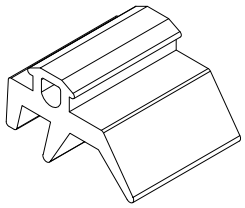	**ACET841** **4mm Low Line External Gasket**	**200**	**m**		MF	
					SA	
					KL	
					HP	
					BSC	
					SMC	
					PC	
					W	
					Z	✓
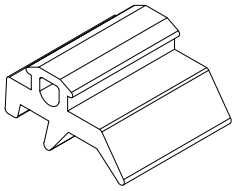	**ACET842** **3mm Low Line External Gasket**	**200**	**m**		MF	
					SA	
					KL	
					HP	
					BSC	
					SMC	
					PC	
					W	
					Z	✓
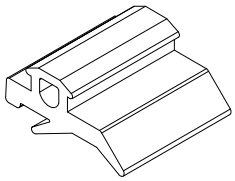	**ACET843** **2mm Low Line External Gasket**	**200**	**m**		MF	
					SA	
					KL	
					HP	
					BSC	
					SMC	
					PC	
					W	
					Z	✓
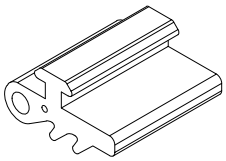	**ACET845** **3mm Low Line Slide In Gasket**	**100**	**m**		MF	
					SA	
					KL	
					HP	
					BSC	
					SMC	
					PC	
					W	
					Z	✓

T-BARS
ACVG65=2.5mm
ACVG66=3.0mm
ACVL150=4.0mm

Screw (Grub)

MF = Mill Finish
SA = Silver Anodised
KL = Basic Colour
HP = Special Colour
BSC = Brushed Satin Chrome
SMC = Smokey Chrome
PC = Polished Chrome
W = White
Z = Black

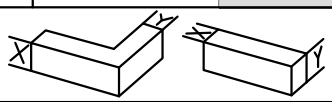

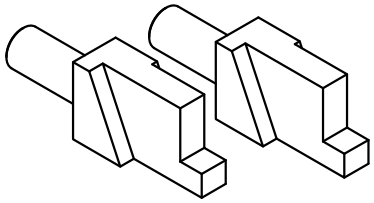	**ACET904** **Crimping Punch**	**1**	**pair**	**ETC308** **ETC310** **ETC313** **ETC423**	MF SA KL HP BSC SMC PC W Z
	ACET911 **Friction Hinge Drill Jig** **For Standard Top Hung**	**1**	**each**		MF SA KL HP BSC SMC PC W Z
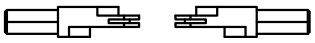	**ACET913** **Crimping Punch**	**1**	**pair**	**ETC328N**	MF SA KL HP BSC SMC PC W Z
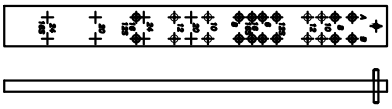	**ACET941** **Friction Hinge Drill Jig** **For Standard Top &** **Side Hung**	**1**	**each**	**ETC423** **ETC321** **ETC323** **ETC324** **ETC326** **ETC327** **ETC328N** **ETC329**	MF SA KL HP BSC SMC PC W Z
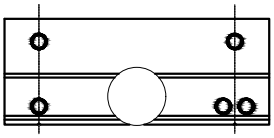	**ACET945** **Transom/Mullion Drill Jig**	**1**	**each**	**ETC333** **ETC335**	MF SA KL HP BSC SMC PC W Z

T-BARS
ACVG65=2.5mm
ACVG66=3.0mm
ACVL150=4.0mm

Screw (Grub)

MF = Mill Finish
SA = Silver Anodised
KL = Basic Colour
HP = Special Colour
BSC = Brushed Satin Chrome
SMC = Smokey Chrome
PC = Polished Chrome
W = White
Z = Black

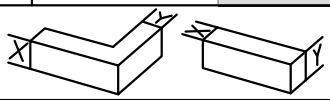

Image	Part Code	Pack	Unit	Application	Colour
	ACET948 **Punch Tool**	**1**	**each**	**ETC324**	MF SA KL HP BSC SMC PC W Z
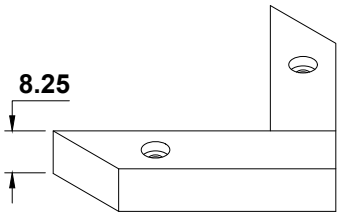	**ACET968** **8.25mm Packer**	**1**	**each**	**ACET979** **ETC346**	MF SA KL HP BSC SMC PC W Z
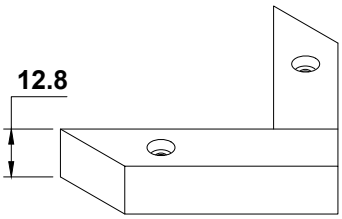	**ACET969** **12.8mm Packer**	**1**	**each**	**ACET979** **ETC326** **ETC329**	MF SA KL HP BSC SMC PC W Z
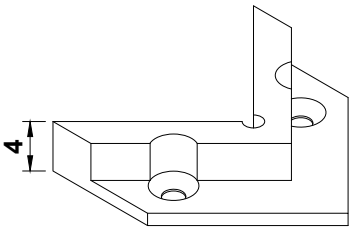	**ACET975** **4mm Packer**	**1**	**each**	**ACET979** **ETC302**	MF SA KL HP BSC SMC PC W Z
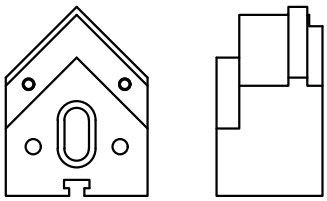	**ACET976** **Vee Block**	**1**	**each**	**ACET977**	MF SA KL HP BSC SMC PC W Z

T-BARS
ACVG65=2.5mm
ACVG66=3.0mm
ACVL150=4.0mm

Screw (Grub)

MF	**= Mill Finish**	**W**	**= White**
SA	**= Silver Anodised**	**Z**	**= Black**
KL	**= Basic Colour**		
HP	**= Special Colour**		
BSC	**= Brushed Satin Chrome**		
SMC	**= Smokey Chrome**		
PC	**= Polished Chrome**		

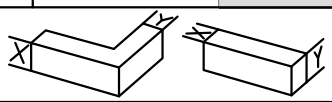

Image	Part Code	Pack	Unit	Application	Colour
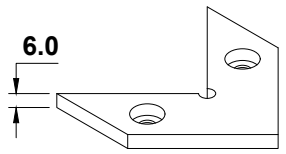	**ACET977** **6mm Packer**	**1**	**each**	**ACET976**	MF SA KL HP BSC SMC PC W Z
	ACET978 **Crimping Punch**	**1**	**pair**	**ETC315**	MF SA KL HP BSC SMC PC W Z
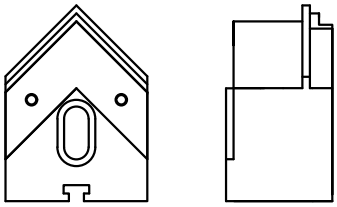	**ACET979** **Vee Block**	**1**	**each**	**ETC323** **ETC324** **ETC346** **ETC621**	MF SA KL HP BSC SMC PC W Z
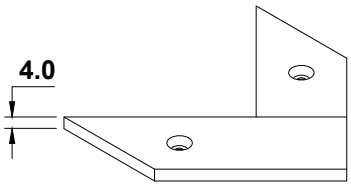	**ACET980** **11.8mm Packer**	**1**	**each**	**ACET979** **ETC324**	MF SA KL HP BSC SMC PC W Z
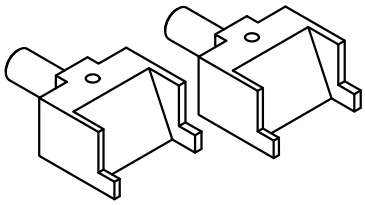	**ACET981** **Crimping Punch**	**1**	**pair**	**ETC321** **ETC323** **ETC324** **ETC326** **ETC327** **ETC329** **ETC344** **ETC345** **ETC346**	MF SA KL HP BSC SMC PC W Z

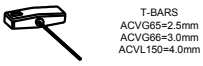

MF = Mill Finish
SA = Silver Anodised
KL = Basic Colour
HP = Special Colour
BSC = Brushed Satin Chrome
SMC = Smokey Chrome
PC = Polished Chrome
W = White
Z = Black

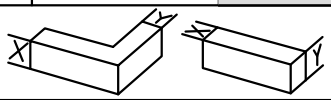

Image	Part Code	Pack	Unit	Application	Colour
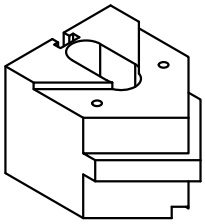	**ACET982** **Vee Block**	1	each	ACET983 ETC310 ETC313 ETC328N ETC423	MF SA KL HP BSC SMC PC W Z
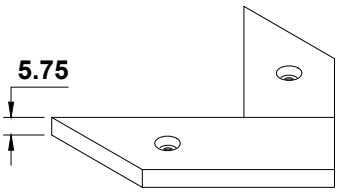	**ACET983** **5.75mm Packer**	1	each	ACET979 ACET982 ETC310 ETC313 ETC328N ETC344 ETC345 ETC423	MF SA KL HP BSC SMC PC W Z
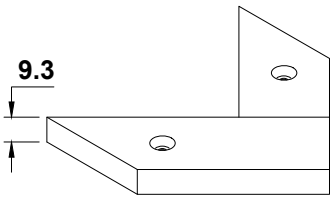	**ACET990** **9.3mm Packer**	1	each	ACET979 ACET982 ETC308 ETC344 ETC345	MF SA KL HP BSC SMC PC W Z
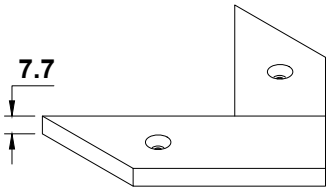	**ACET991** **7.7mm Packer**	1	each	ACET979 ETC323	MF SA KL HP BSC SMC PC W Z
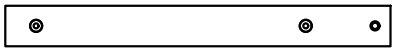	**ACETME93** **Drill Jig**	1	each	ACETME13	MF SA KL HP BSC SMC PC W Z

T-BARS
ACVG65=2.5mm
ACVG66=3.0mm
ACVL150=4.0mm

Screw (Grub)

MF	= Mill Finish	W	= White
SA	= Silver Anodised	Z	= Black
KL	= Basic Colour		
HP	= Special Colour		
BSC	= Brushed Satin Chrome		
SMC	= Smokey Chrome		
PC	= Polished Chrome		

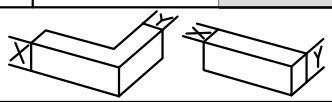

Image	Part Code	Pack	Unit	Application	Colour	
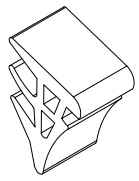	**ACVG49** **6mm Wedge Glazing Gasket**	**100**	**m**	**ETC314**	MF	
					SA	
					KL	
					HP	
					BSC	
					SMC	
					PC	
					W	
					Z	✓
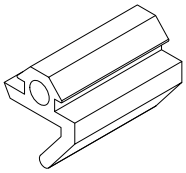	**ACVL032** **Glazing Gasket**	**100**	**m**		MF	
					SA	
					KL	
					HP	
					BSC	
					SMC	
					PC	
					W	
					Z	
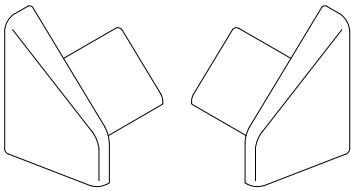	**ACVL059** **End Caps**	**1**	**pair**	**VL72**	MF	
					SA	
					KL	
					HP	
					BSC	
					SMC	
					PC	
					W	✓
					Z	✓
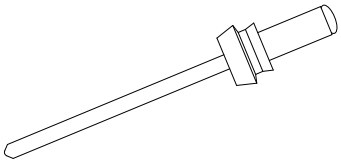	**ACVL061** **Rivet**	**100**	**pack**	**VL72**	MF	✓
					SA	
					KL	
					HP	
					BSC	
					SMC	
					PC	
					W	
					Z	
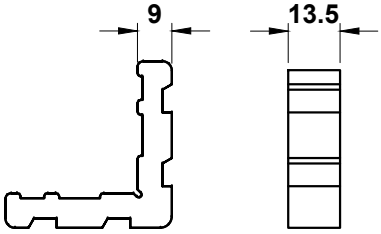	**ACW20017** **Corner Cleat**	**24**	**pack**	**ETC328N**	MF	
					SA	
					KL	
					HP	
					BSC	
					SMC	
					PC	
					W	
					Z	

T-BARS
ACVG65=2.5mm
ACVG66=3.0mm
ACVL150=4.0mm

Screw (Grub)

MF	**= Mill Finish**	**W**	**= White**
SA	**= Silver Anodised**	**Z**	**= Black**
KL	**= Basic Colour**		
HP	**= Special Colour**		
BSC	**= Brushed Satin Chrome**		
SMC	**= Smokey Chrome**		
PC	**= Polished Chrome**		

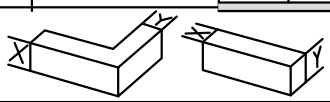

Image	Part Code	Pack	Unit	Application	Colour	
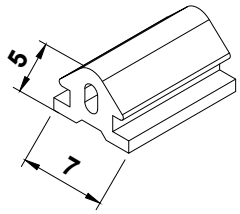	**ACVS010** **PVC Insert**	**7.3**	**m**	**ETC080**	MF	
					SA	
					KL	
					HP	
					BSC	
					SMC	
					PC	
					W	
					Z	✓
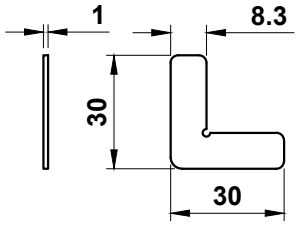	**ACW20024** **Stainless Steel Chevron**	**100**	**pack**	**ETC324N** **ETC424N**	MF	✓
					SA	
					KL	
					HP	
					BSC	
					SMC	
					PC	
					W	
					Z	
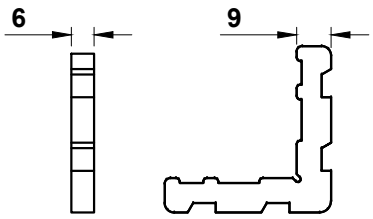	**ACW20026** **Corner Cleat**	**24**	**pack**	**ETC303** **ETC306**	MF	
					SA	
					KL	
					HP	
					BSC	
					SMC	
					PC	
					W	
					Z	
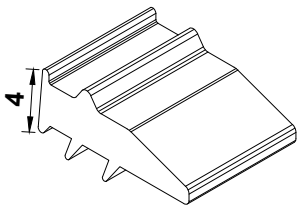	**ACW20034** **4mm Low Line Internal Wedge Gasket**	**200**	**m**		MF	
					SA	
					KL	
					HP	
					BSC	
					SMC	
					PC	
					W	
					Z	✓
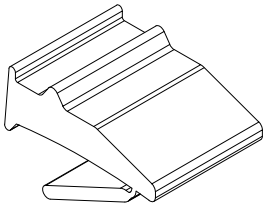	**ACW20038** **4mm Low Line Internal Wedge Gasket with 1mm tear away strip**	**200**	**m**		MF	
					SA	
					KL	
					HP	
					BSC	
					SMC	
					PC	
					W	
					Z	✓

T-BARS
ACVG65=2.5mm
ACVG66=3.0mm
ACVL150=4.0mm

Screw (Grub)

MF = Mill Finish
SA = Silver Anodised
KL = Basic Colour
HP = Special Colour
BSC = Brushed Satin Chrome
SMC = Smokey Chrome
PC = Polished Chrome
W = White
Z = Black

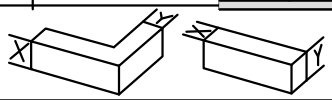

Image	Part Code	Pack	Unit	Application	Colour
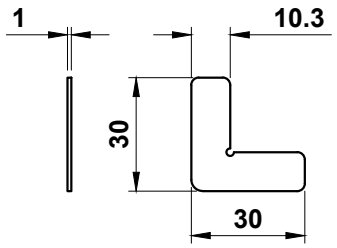	**WCA106** **Stainless Steel Chevron**	**50**	**pack**	**ETC315** **ETC303**	MF ✓ SA KL HP BSC SMC PC W Z
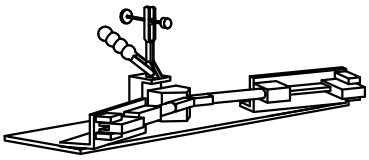	**WUT024HSZA** **Manual Crimper** **Note: Vee blocks & punches are sold separately.** **Please see Page E04.**	**1**	**each**		MF SA KL HP BSC SMC PC W Z
					MF SA KL HP BSC SMC PC W Z
					MF SA KL HP BSC SMC PC W Z
					MF SA KL HP BSC SMC PC W Z

T-BARS
ACVG65=2.5mm
ACVG66=3.0mm
ACVL150=4.0mm

Screw (Grub)

MF	**= Mill Finish**	**W**	**= White**
SA	**= Silver Anodised**	**Z**	**= Black**
KL	**= Basic Colour**		
HP	**= Special Colour**		
BSC	**= Brushed Satin Chrome**		
SMC	**= Smokey Chrome**		
PC	**= Polished Chrome**		

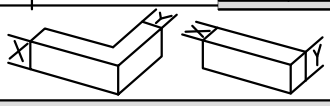

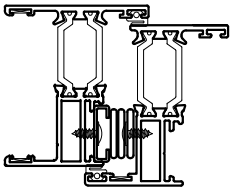

Friction Hinge Stays 13mm Stack (Standard)

Top Hung Windows

Top Hung	Type of Hinge / Stay	Max. Vent Weight (kgs)	Height Mimimum	Height Maximum	Typical Width
ACINDS10	Standard	16	275	400	–
ACINDS16		21	400	780	–
ACINDS20		20	700	1100	–
ACINDS24		40	850	1300	–
ACINDA10	Austenitic	16	275	400	–
ACINDA16		21	400	780	–
ACINDA20		20	700	1100	–
ACINDA24		40	850	1300	–
ACINDR12	Restricted	20	350	550	–
ACINDR16		21	500	780	–
ACINDR20		26	700	1100	–
ACINDR24		40	850	1300	–

Side Hung Windows

Side Hung	Type of Hinge / Stay	Max. Vent Weight (kgs)	Width Minimum	Width Maximum	Typical Height
ACINDSSH12	Standard	22	300	600	-
ACINDSSH16		28	400	600	-
ACINDASH12	Austenitic	22	300	600	-
ACINDASH16		28	400	600	-
ACINDRSH12	Restricted	22	300	600	-
ACINDRSH16		24	400	600	-
ACETME13	Egress	40	400	900	-

Note1: Vent Height / Width is measured in mm from rebate to rebate (not overall size or outer frame)
Note2: Top hung height and side hung width sizes to be reduced by 2mm where size is 450mm or smaller
Note3: Typical Dimensions based on Max. Size and Glass 30kg/metre
Note4: * ACINVSH12 has a minimum order of 25 pairs

T-BARS
ACVG65=2.5mm
ACVG66=3.0mm
ACVL150=4.0mm

Screw (Grub)

MF	= Mill Finish	W	= White
SA	= Silver Anodised	Z	= Black
KL	= Basic Colour		
HP	= Special Colour		
BSC	= Brushed Satin Chrome		
SMC	= Smokey Chrome		
PC	= Polished Chrome		

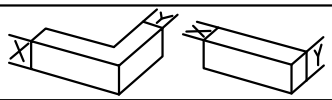

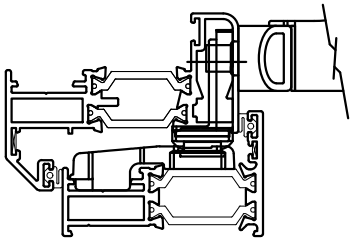

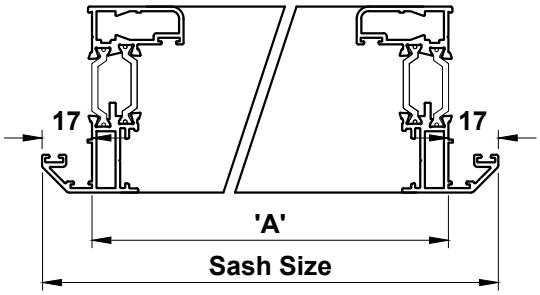

Part Code	Rod Length (mm)	Number of Keeps	Sash Rebate Size ('A')	
			Minimum	Maximum
ACET301L	335	2	340	505
ACET301R				
ACET302L	500	2	506	755
ACET302R				
ACET303L	750	2	756	1005
ACET303R				
ACET304L	1000	4	1006	1255
ACET304R				
ACET305L	1250	4	1256	1400
ACET305R				

Note: To Suit Handle ACET165

Cam Locking Direction

Cam Locking Direction

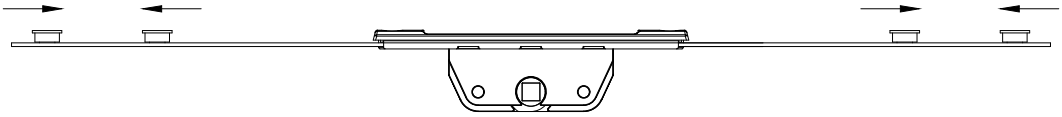

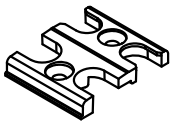

Keep

Image	Part Code	Pack	Unit	Application	Colour	
	ACMX09700 **Alu. Polish**	**1**	**each**		MF	✓
					SA	
					KL	
					HP	
					M	
					GOZ	
					W	
					Z	
					PC	
	ACMX09761 **Maxi Gloss**	**1**	**each**		MF	
					SA	
					KL	
					HP	
					M	
					GOZ	
					W	
					Z	
					PC	
	ACMX09762 **Alu. Bright**	**1**	**each**		MF	
					SA	
					KL	
					HP	
					M	
					GOZ	
					W	
					Z	
					PC	
	ACMX09763 **Teflon Spray**	**1**	**each**		MF	
					SA	
					KL	
					HP	
					M	
					GOZ	
					W	
					Z	
					PC	
	ACMX09764 **Maxi Clean**	**1**	**each**		MF	
					SA	
					KL	
					HP	
					M	
					GOZ	
					W	
					Z	
					PC	

T-BARS
ACVG65=2.5mm
ACVG66=3.0mm
ACVL150=4.0mm

Screw (Grub)

MF = Mill Finish
SA = Silver Anodised
KL = Basic Colour
HP = Special Colour
M = Dual Colour
GOZ = Gold
W = White
Z = Black

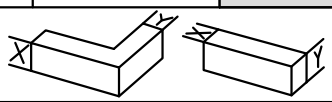

Image	Part Code	Pack	Unit	Application	Colour
	ACMX09765 **Alu. Cleaner**	**1**	**each**		MF SA KL HP M GOZ W Z PC
	ACMX09770 **Roll & Wrap 100mm**	**1**	**each**		MF SA KL HP M GOZ W Z PC
	ACMX09775 **Grip Handwrap**	**1**	**each**		MF SA KL HP M GOZ W Z PC
	ACMX09801 **Protective Tape 50mm**	**1**	**each**		MF SA KL HP M GOZ W Z PC
	ACMX09802 **Protective Tape 70mm**	**1**	**each**		MF SA KL HP M GOZ W Z PC

T-BARS
ACVG65=2.5mm
ACVG66=3.0mm
ACVL150=4.0mm

Screw (Grub)

MF = Mill Finish
SA = Silver Anodised
KL = Basic Colour
HP = Special Colour

M = Dual Colour
GOZ = Gold
W = White
Z = Black

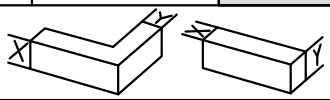

Image	Part Code	Pack	Unit	Application	Colour
	ACMX09803 **Protective Tape 100mm**	**1**	**each**		MF SA KL HP M GOZ W Z PC
	ACMX09830 **Rubber Sealant**	**1**	**each**		MF SA KL HP M GOZ W Z PC
	ACSIL04 **Sealing Glue** **Order with suffix of KL colour (eg.ACSIL04KL005) or BL=Black/WP=White/ CL=Clear**	**1**	**each**		MF SA KL ✓ HP M GOZ W ✓ Z ✓ PC
	ACSIL08 **Silicon Gun**	**1**	**each**		MF SA KL HP M GOZ W Z PC
	ACSIL013 **Glue for Mitre**	**1**	**each**		MF SA KL HP M GOZ W Z PC

T-BARS
ACVG65=2.5mm
ACVG66=3.0mm
ACVL150=4.0mm

Screw (Grub)

MF = Mill Finish
SA = Silver Anodised
KL = Basic Colour
HP = Special Colour
M = Dual Colour
GOZ = Gold
W = White
Z = Black

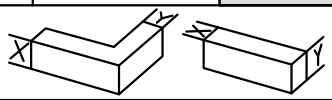

Image	Part Code	Pack	Unit	Application	Colour	
	ACSIL014 **Anti-Corrosion Coating**	**1**	**each**		MF	✓
					SA	
					KL	
					HP	
					M	
					GOZ	
					W	
					Z	
					PC	
					MF	
					SA	
					KL	
					HP	
					M	
					GOZ	
					W	
					Z	
					PC	
					MF	
					SA	
					KL	
					HP	
					M	
					GOZ	
					W	
					Z	
					PC	
					MF	
					SA	
					KL	
					HP	
					M	
					GOZ	
					W	
					Z	
					PC	
					MF	
					SA	
					KL	
					HP	
					M	
					GOZ	
					W	
					Z	
					PC	

T-BARS
ACVG65=2.5mm
ACVG66=3.0mm
ACVL150=4.0mm

Screw (Grub)

MF = Mill Finish
SA = Silver Anodised
KL = Basic Colour
HP = Special Colour
M = Dual Colour
GOZ = Gold
W = White
Z = Black

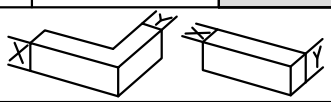

Section C

Sections

Scale Elevations

Scale Elevations

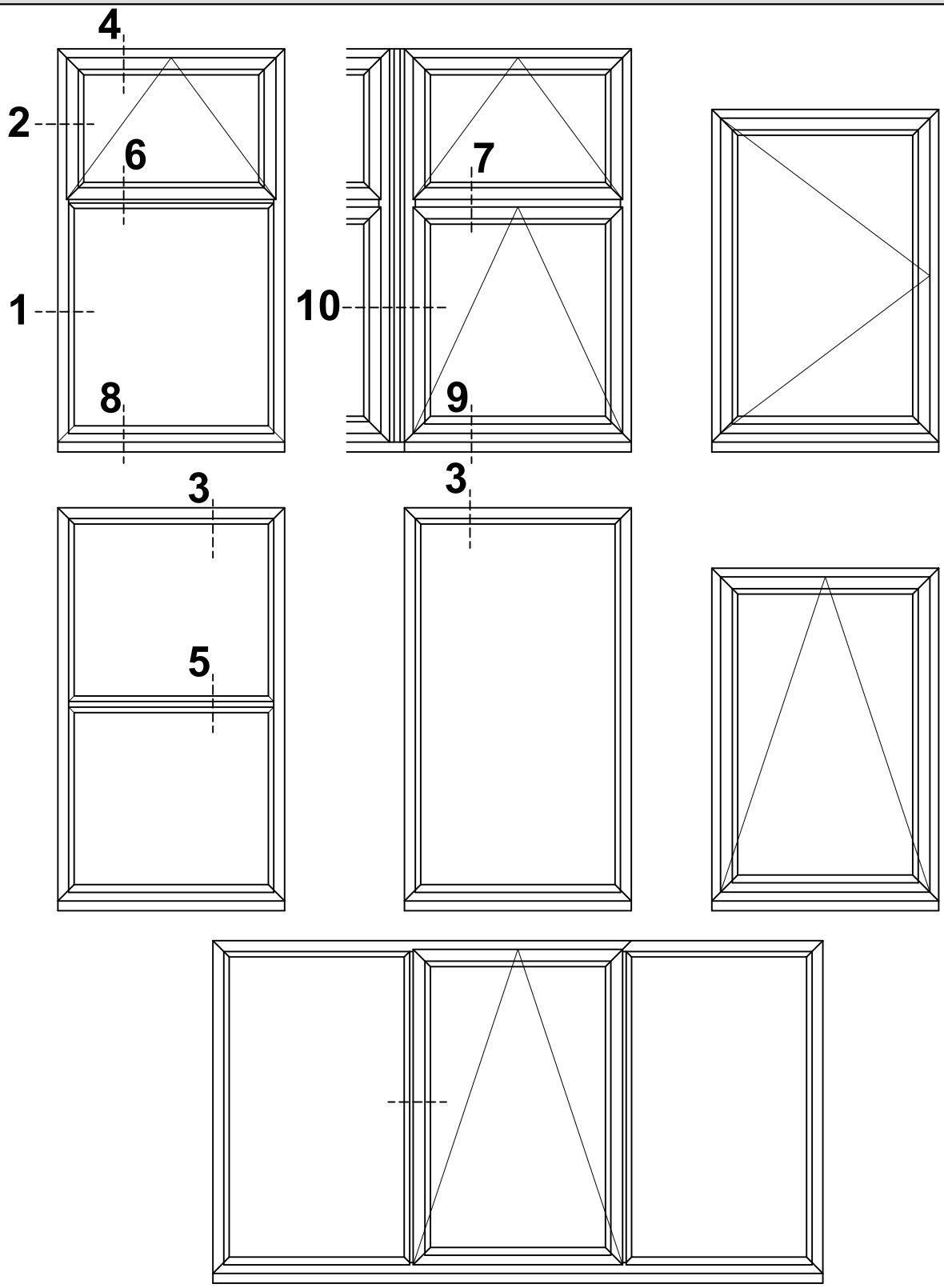

Do Not Scale From This Drawing

Detail 1A

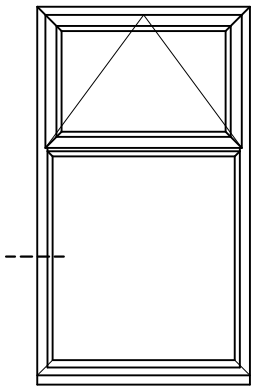

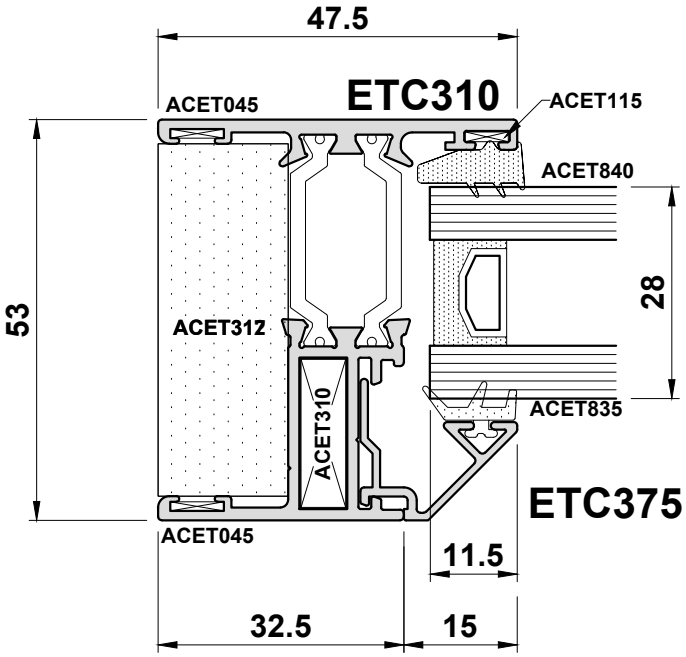

Do Not Scale From This Drawing

Detail 1B

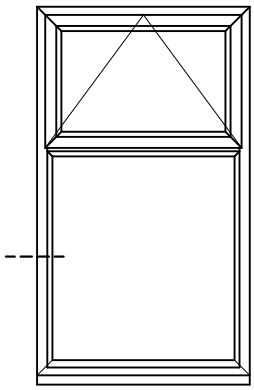

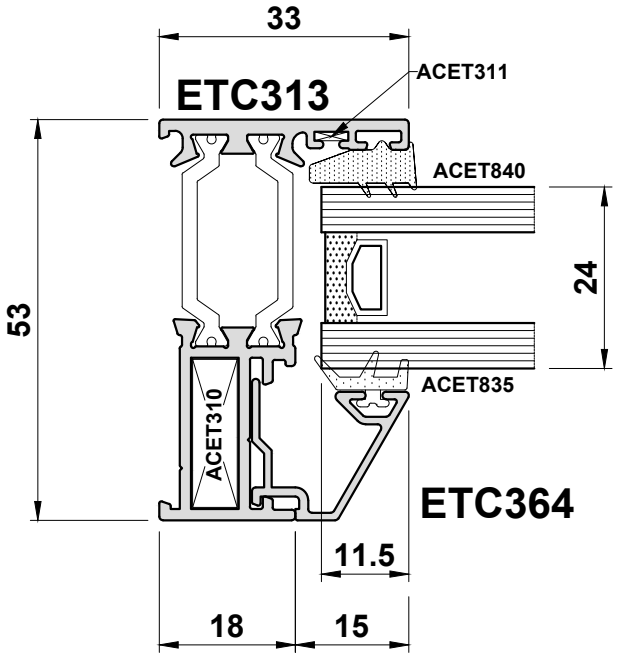

Do Not Scale From This Drawing

Detail 1C

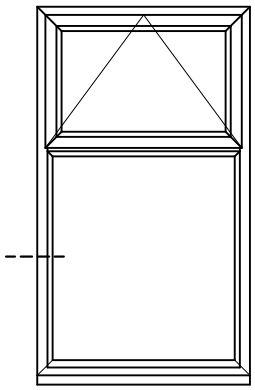

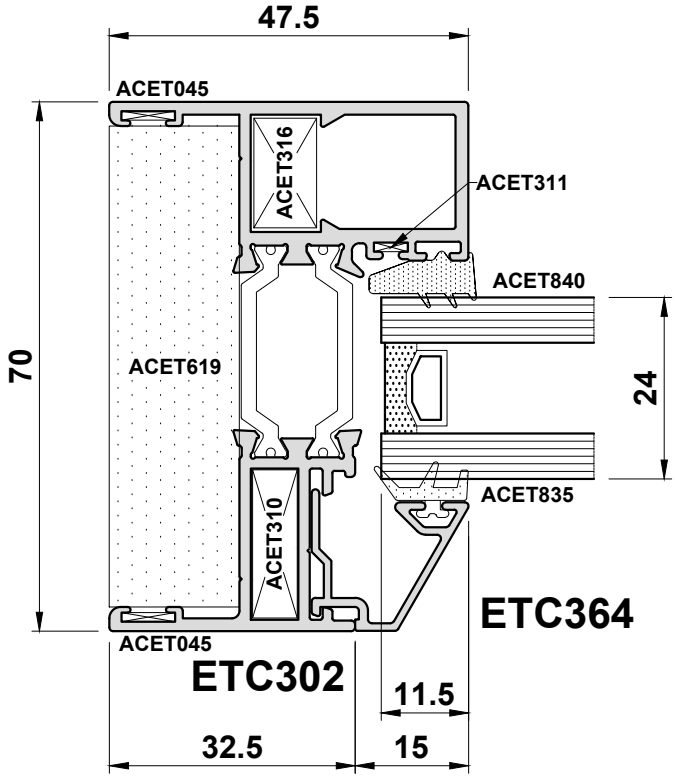

Do Not Scale From This Drawing

Detail 1D

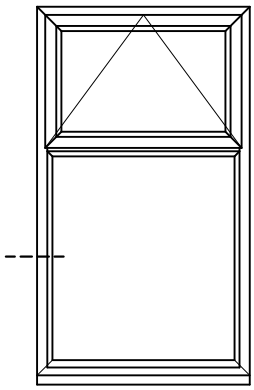

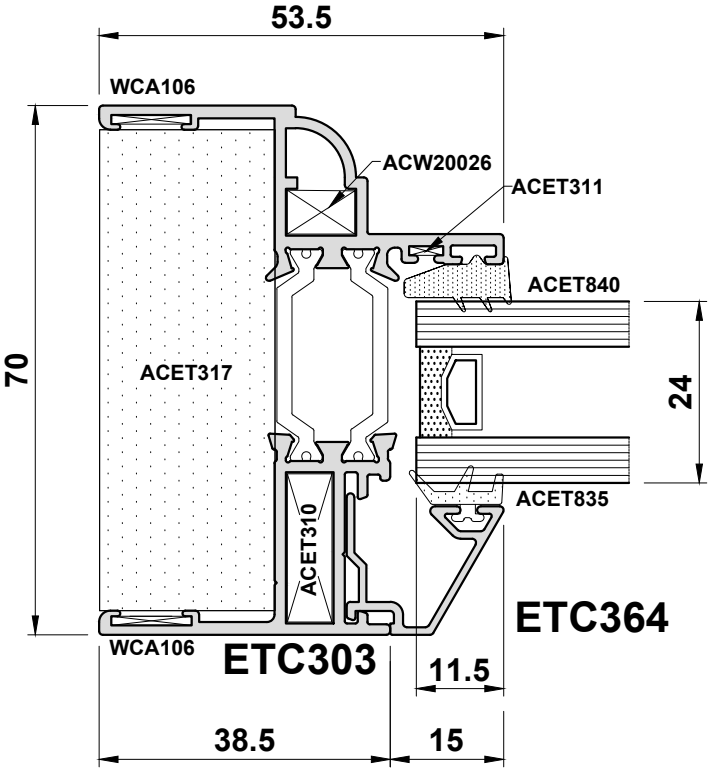

Do Not Scale From This Drawing

Detail 1E

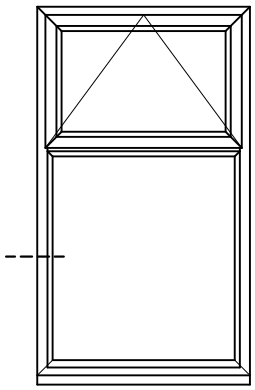

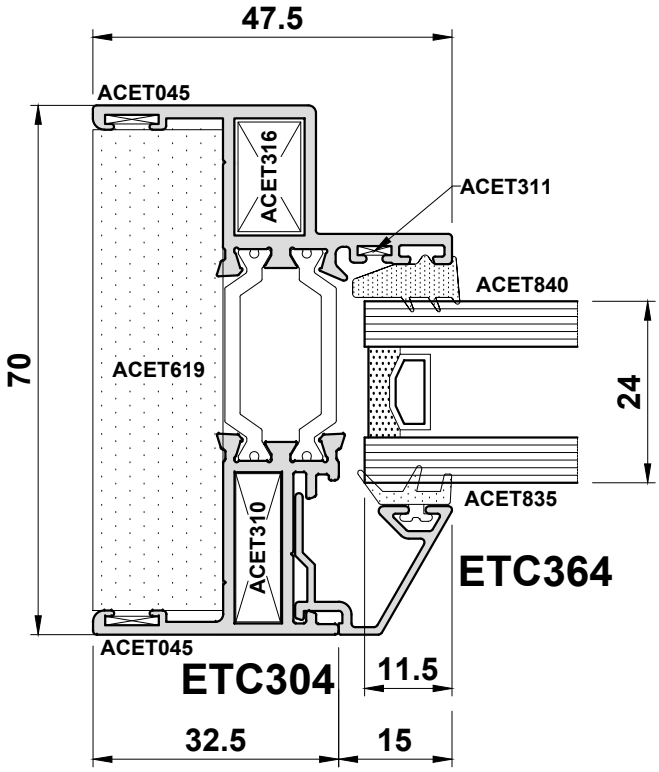

Do Not Scale From This Drawing

Detail 1F

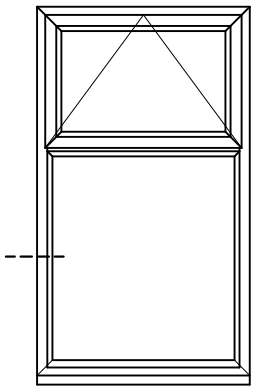

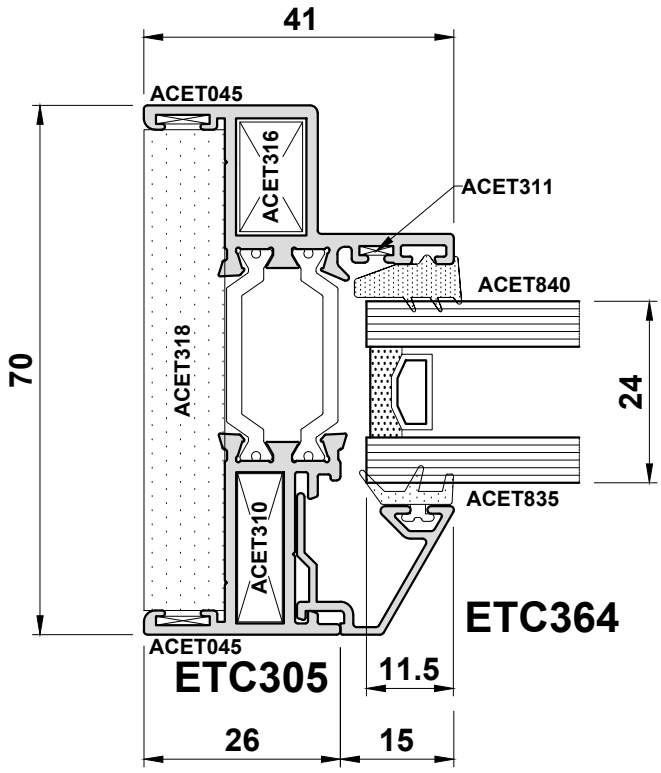

Do Not Scale From This Drawing

Detail 1G

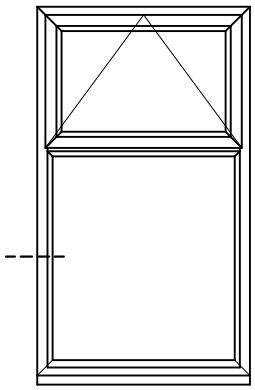

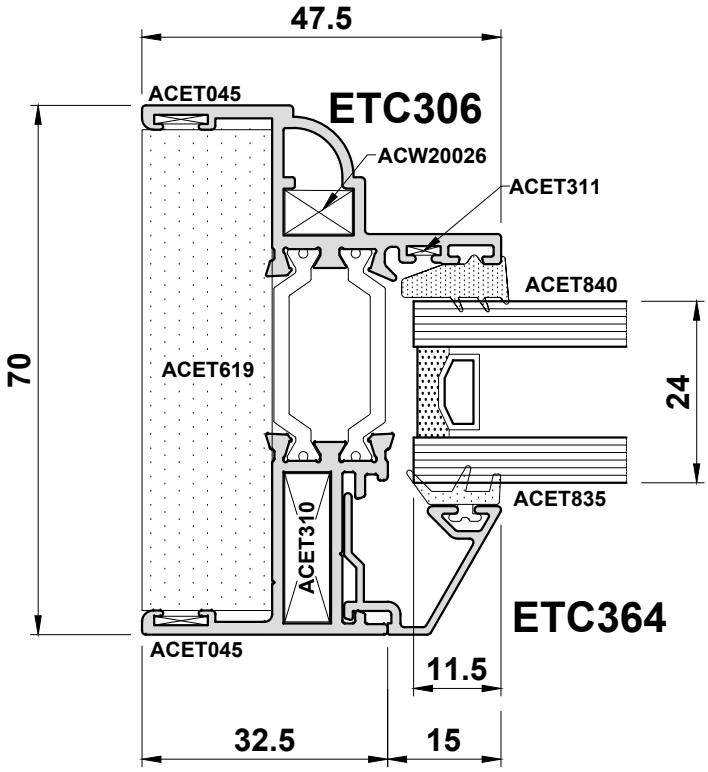

Do Not Scale From This Drawing

Detail 2A

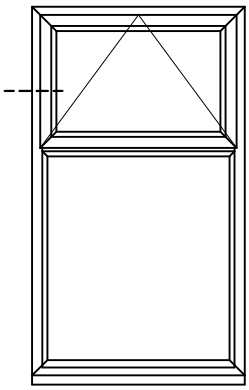

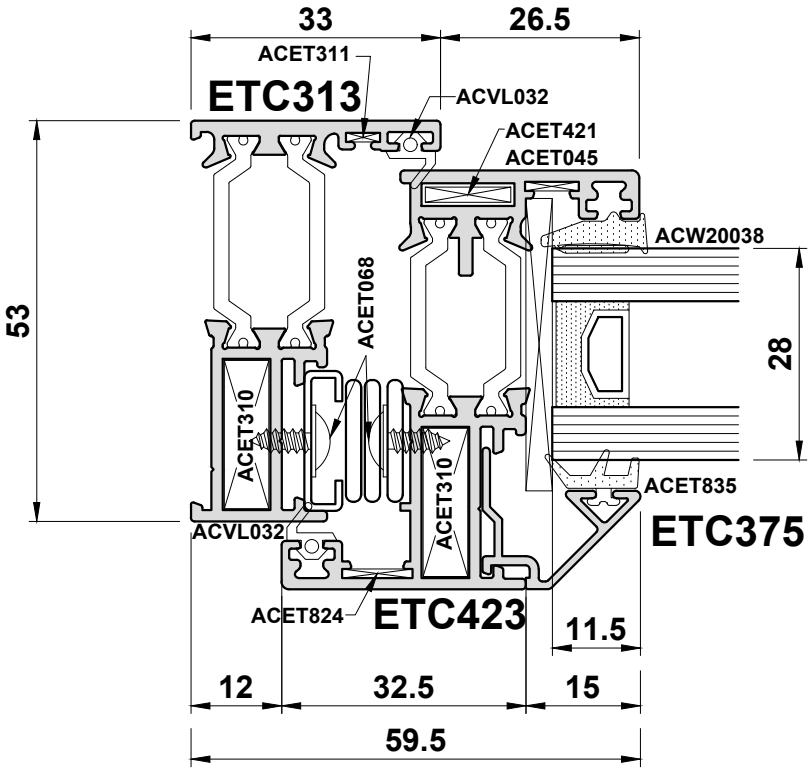

Do Not Scale From This Drawing

Detail 2B

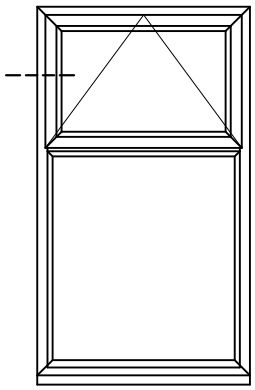

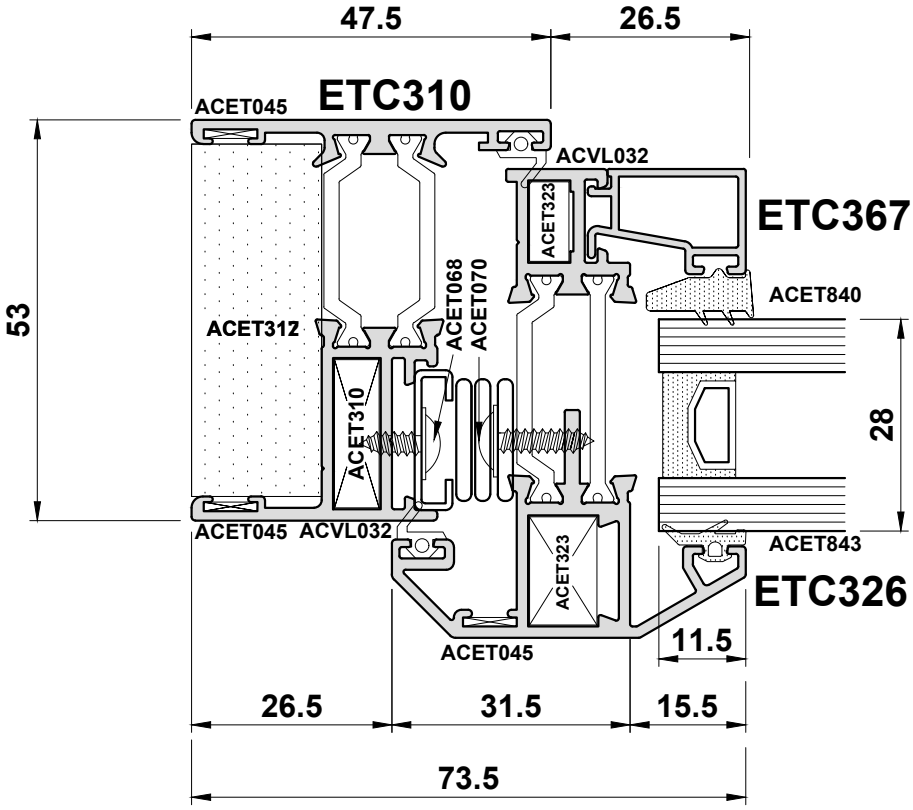

Do Not Scale From This Drawing

Detail 2C

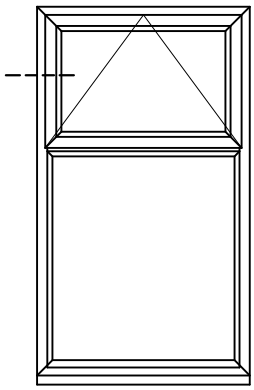

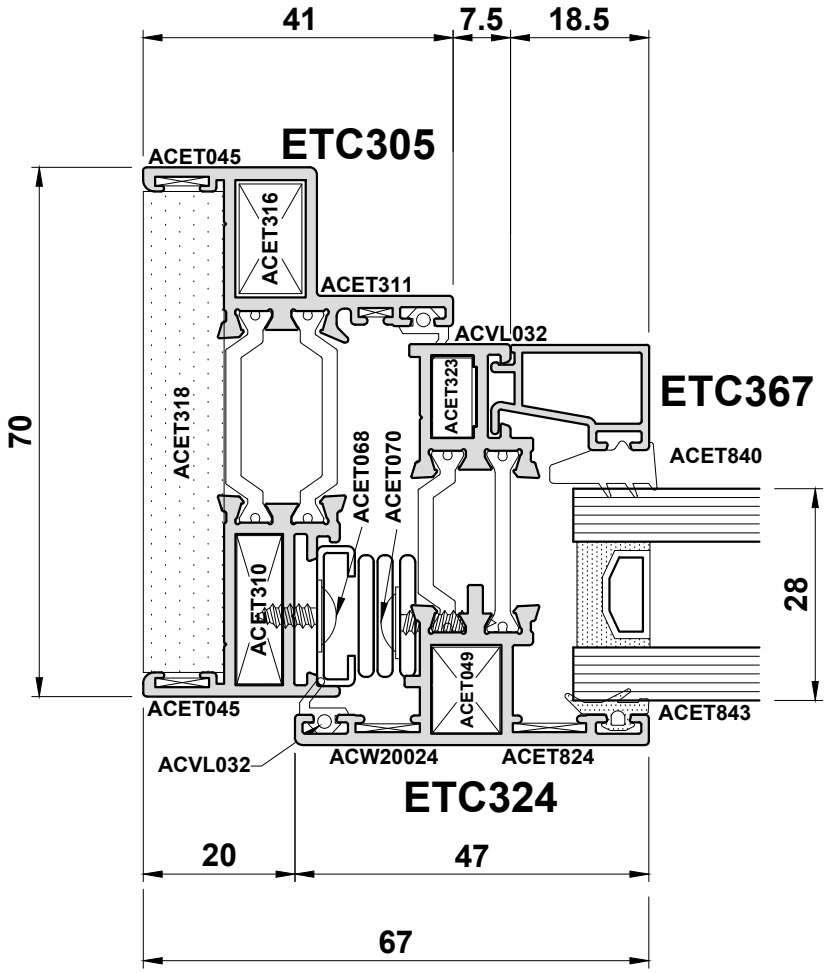

Do Not Scale From This Drawing

Detail 2D

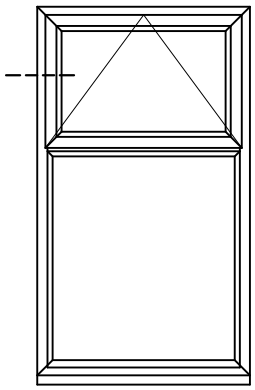

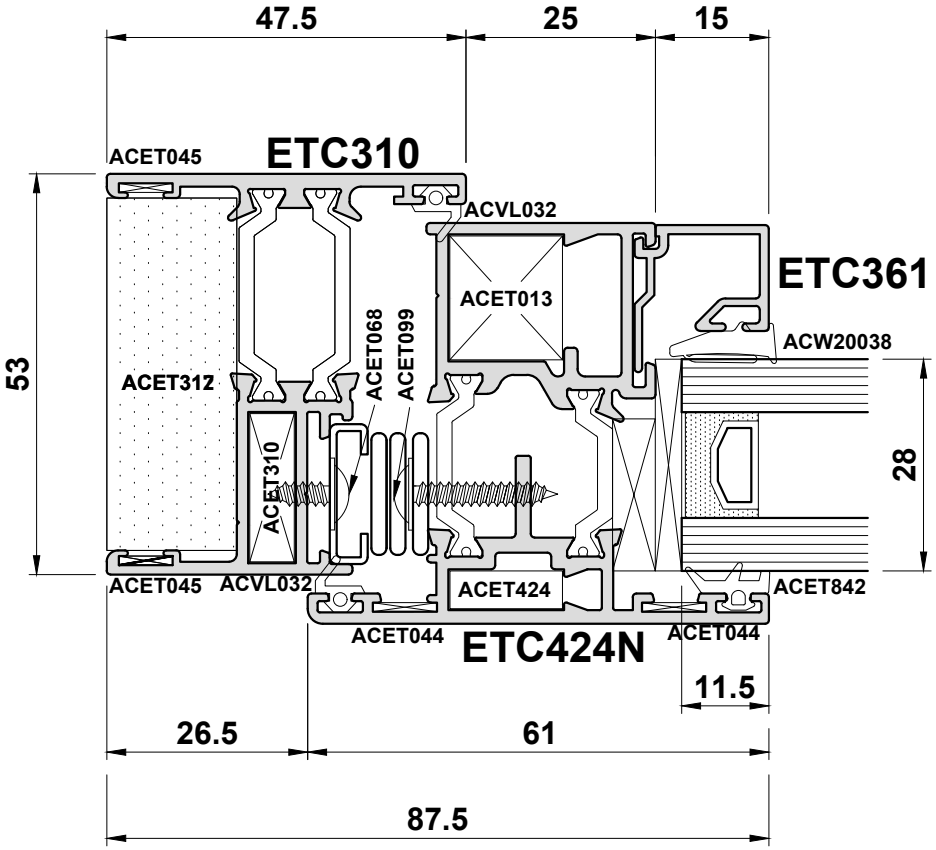

Do Not Scale From This Drawing

Detail 2E

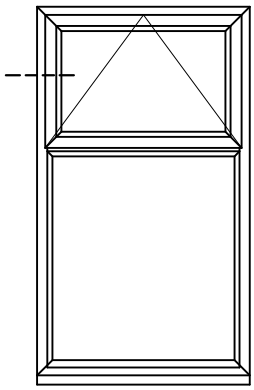

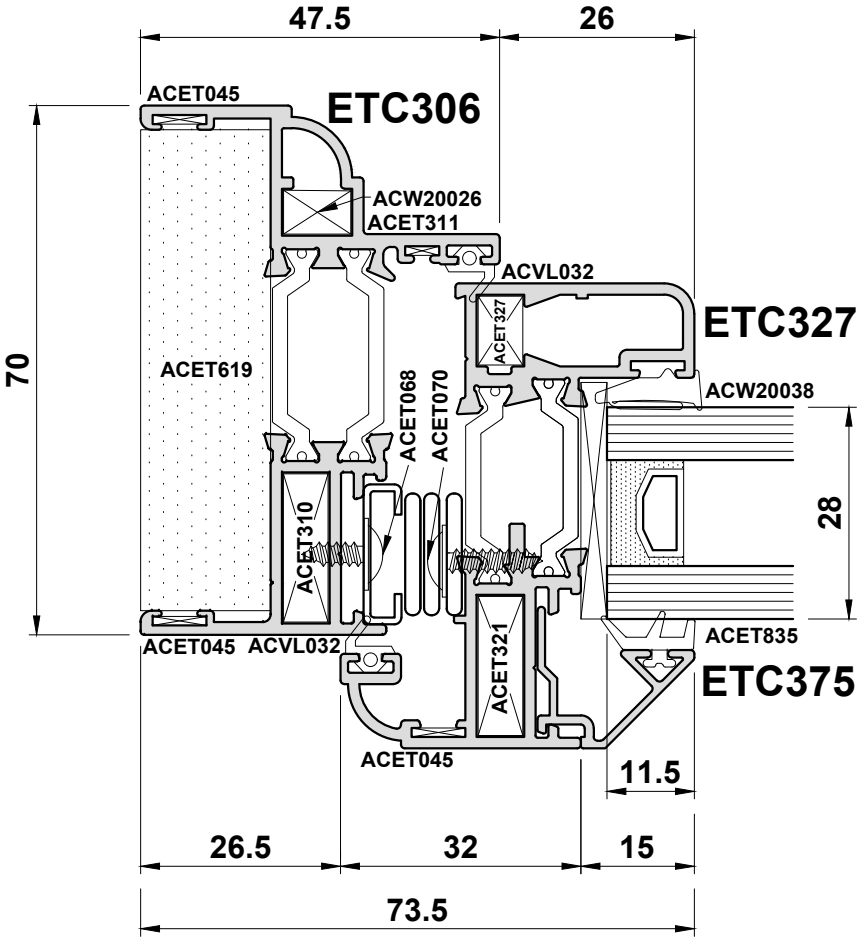

Do Not Scale From This Drawing

Detail 2F

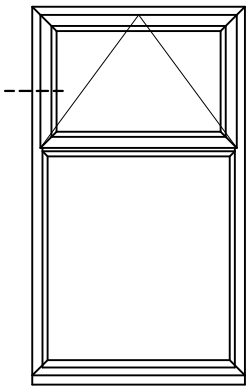

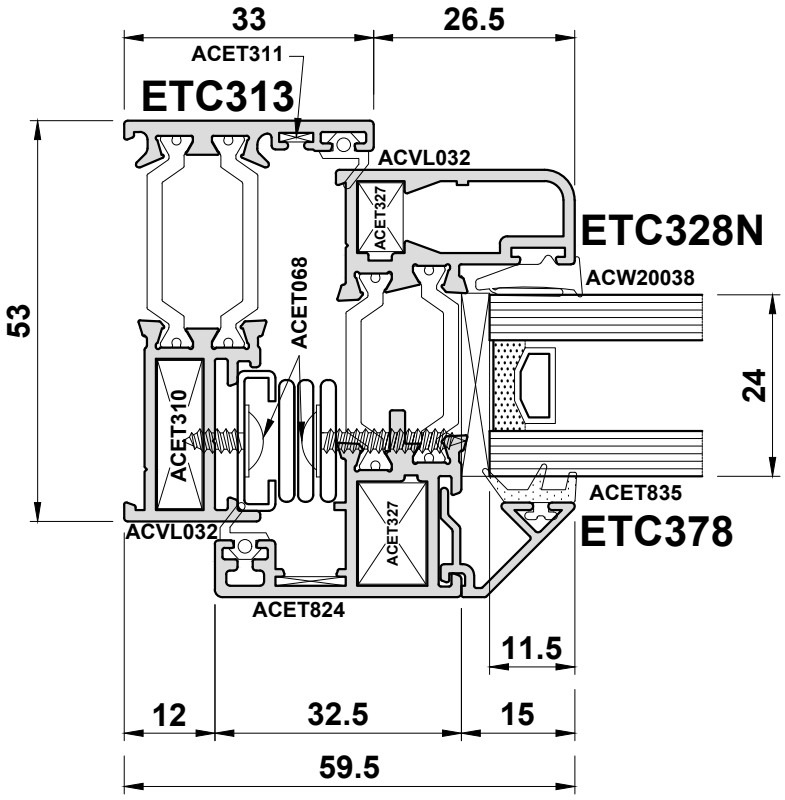

Do Not Scale From This Drawing

Detail 3A

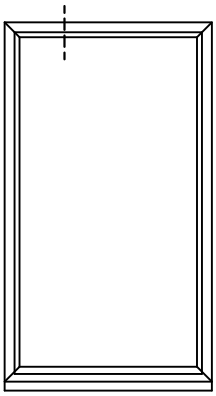

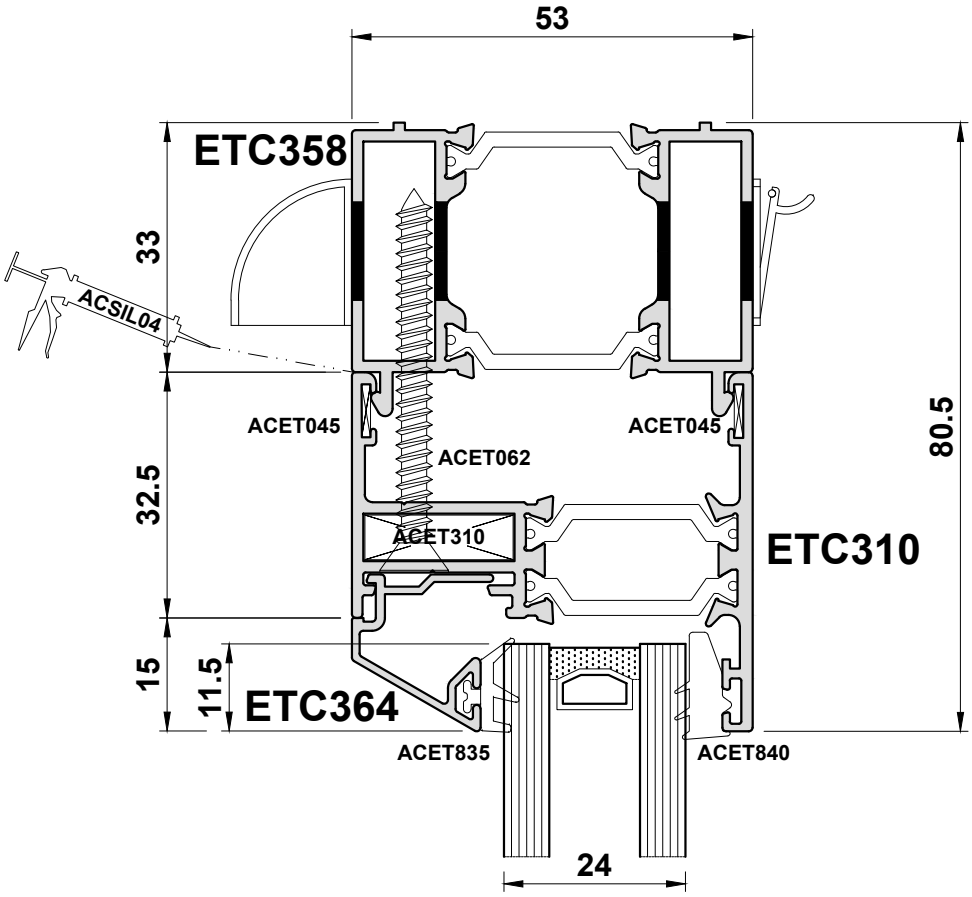

Do Not Scale From This Drawing

Detail 3B

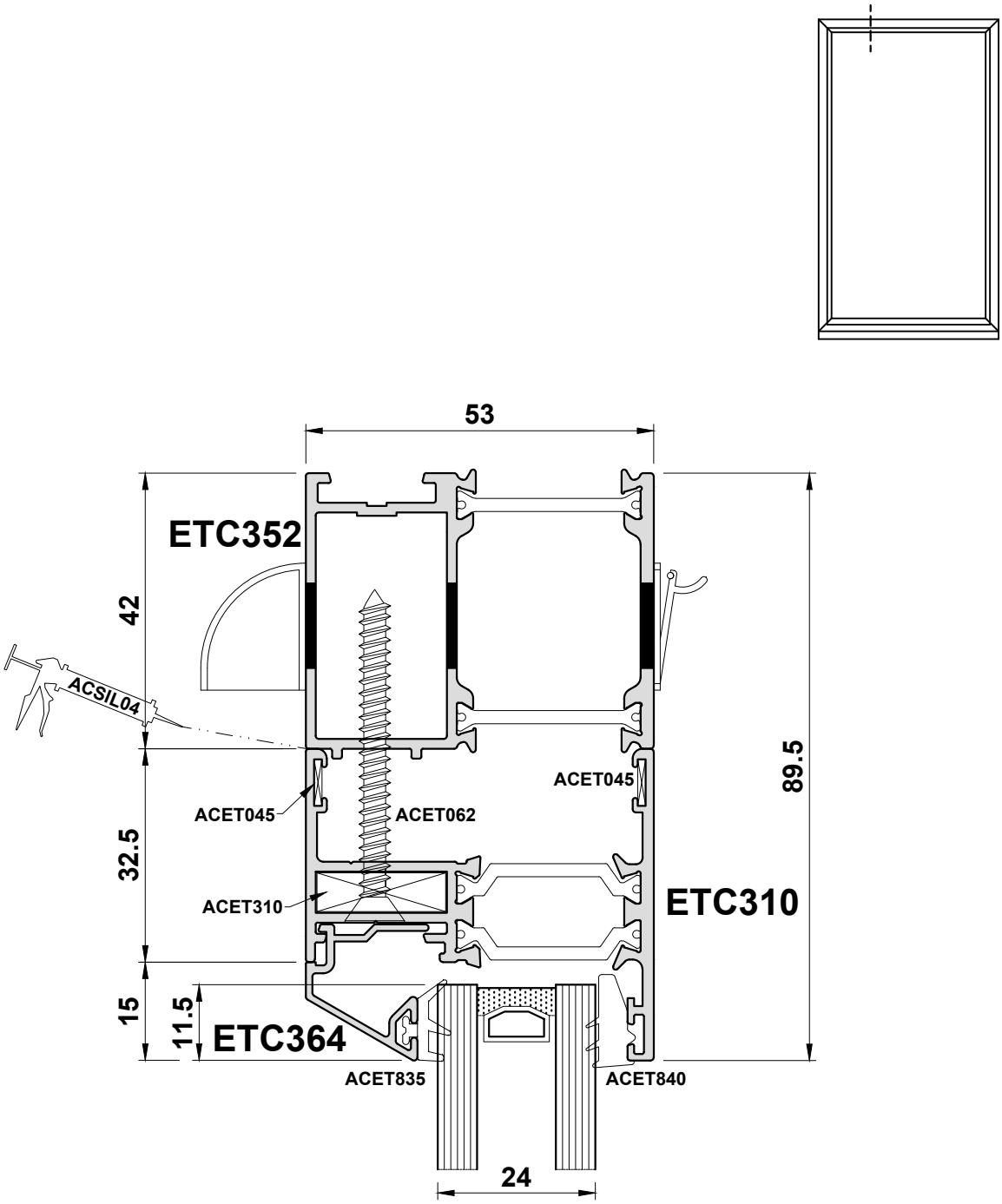

Do Not Scale From This Drawing

Detail 3C

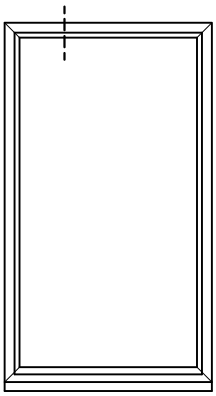

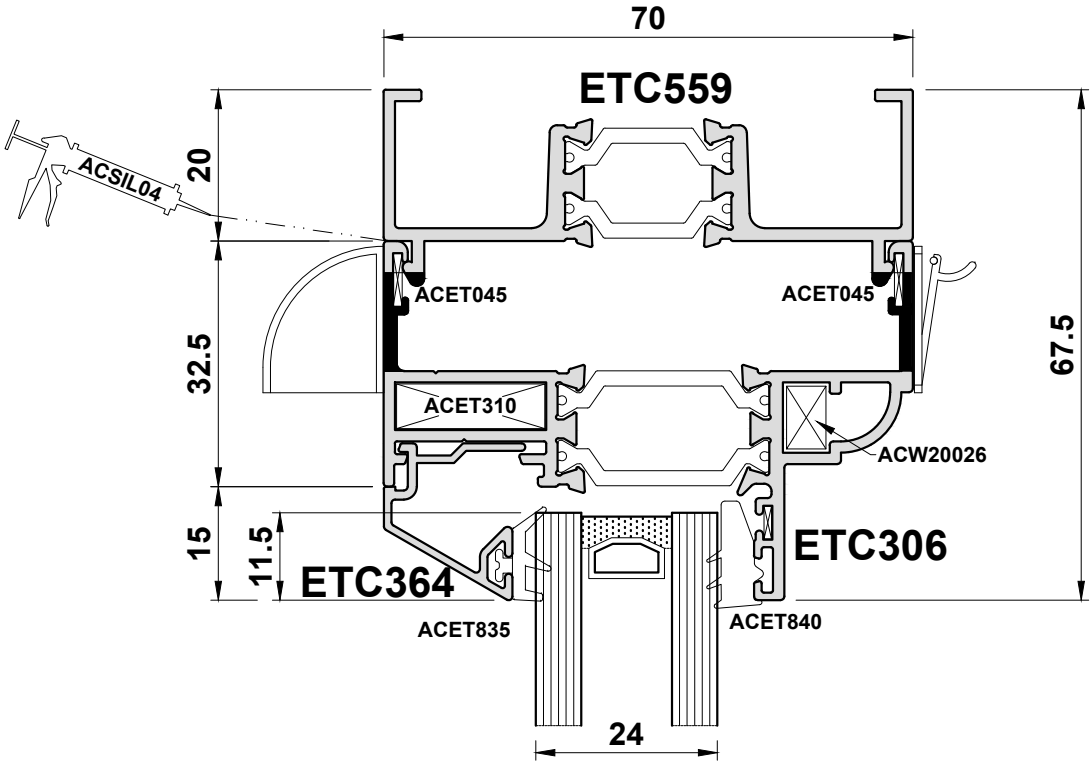

Do Not Scale From This Drawing

Detail 3D

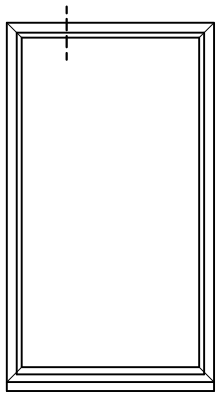

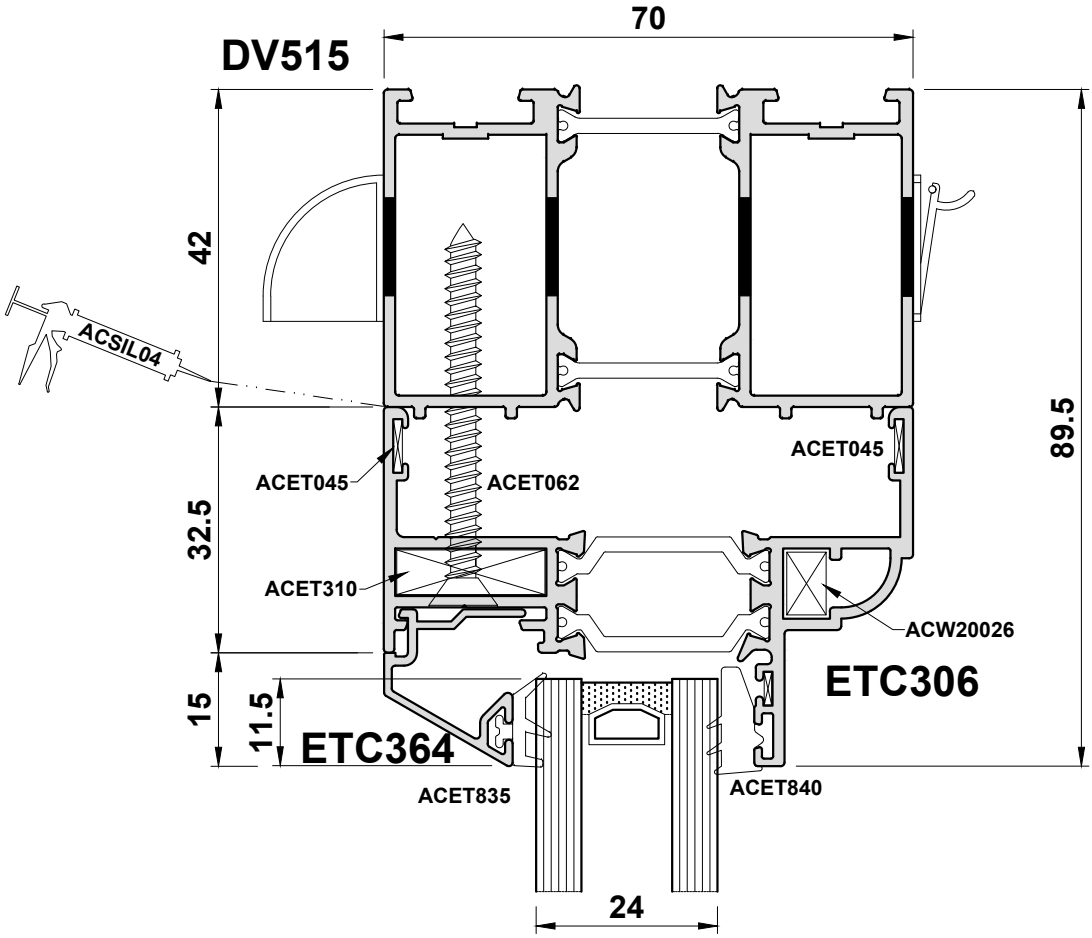

Do Not Scale From This Drawing

Detail 3E

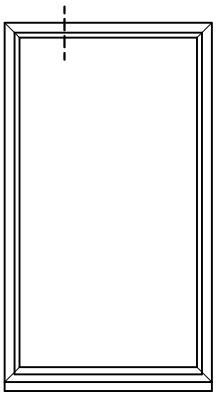

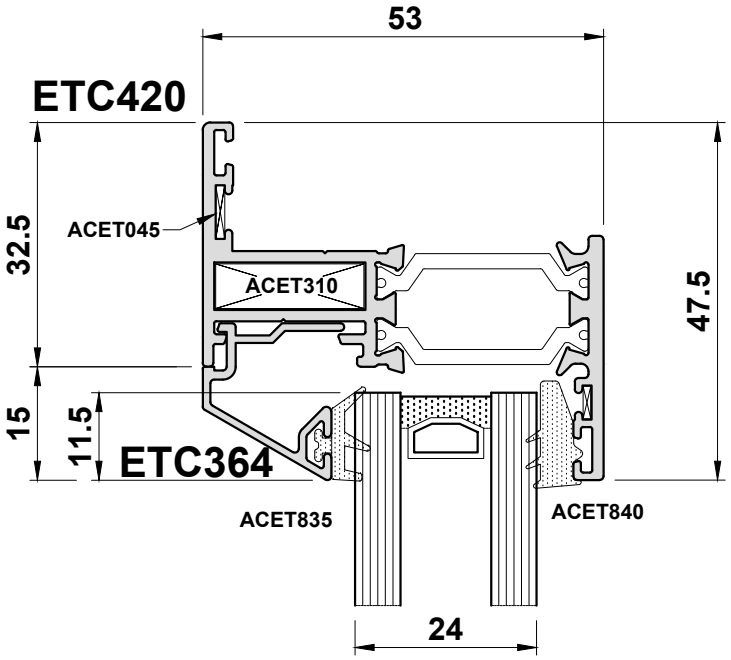

Do Not Scale From This Drawing

Detail 4A

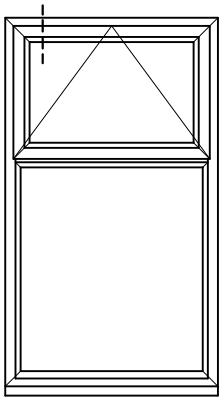

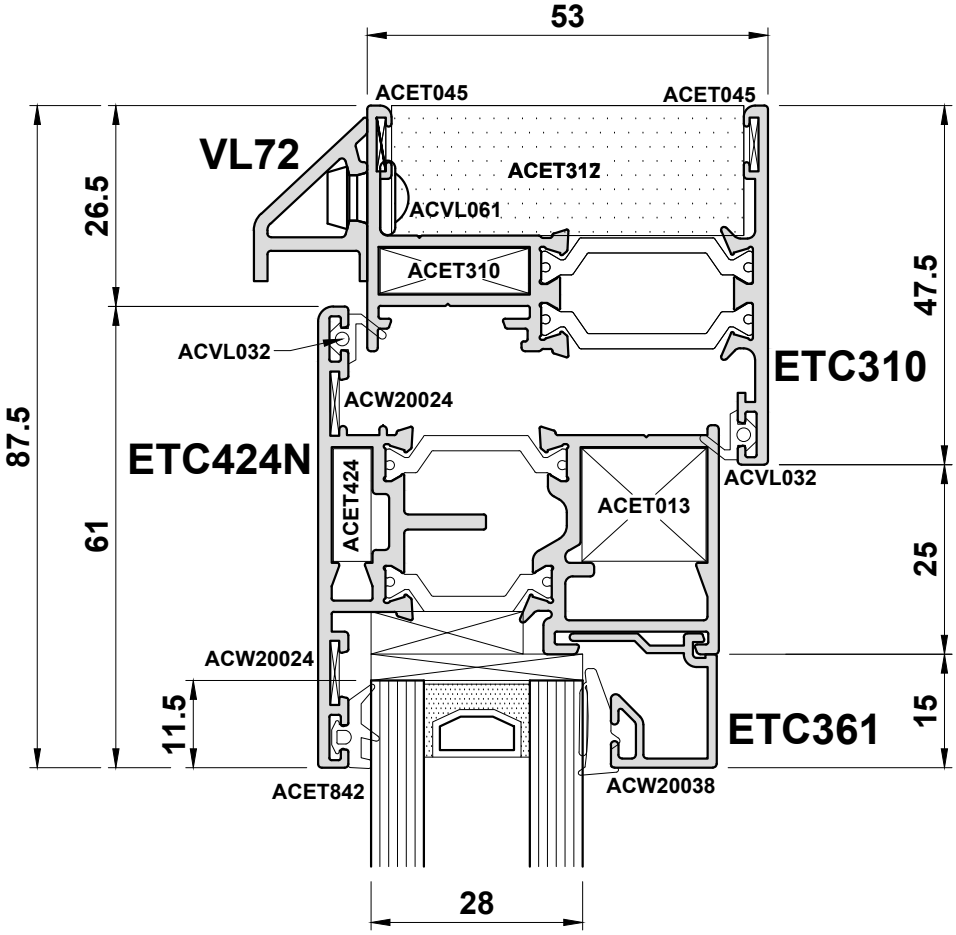

Do Not Scale From This Drawing

Detail 4B

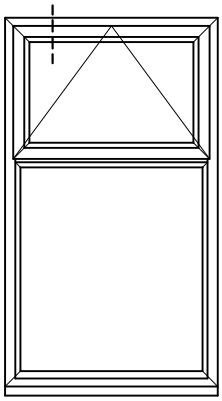

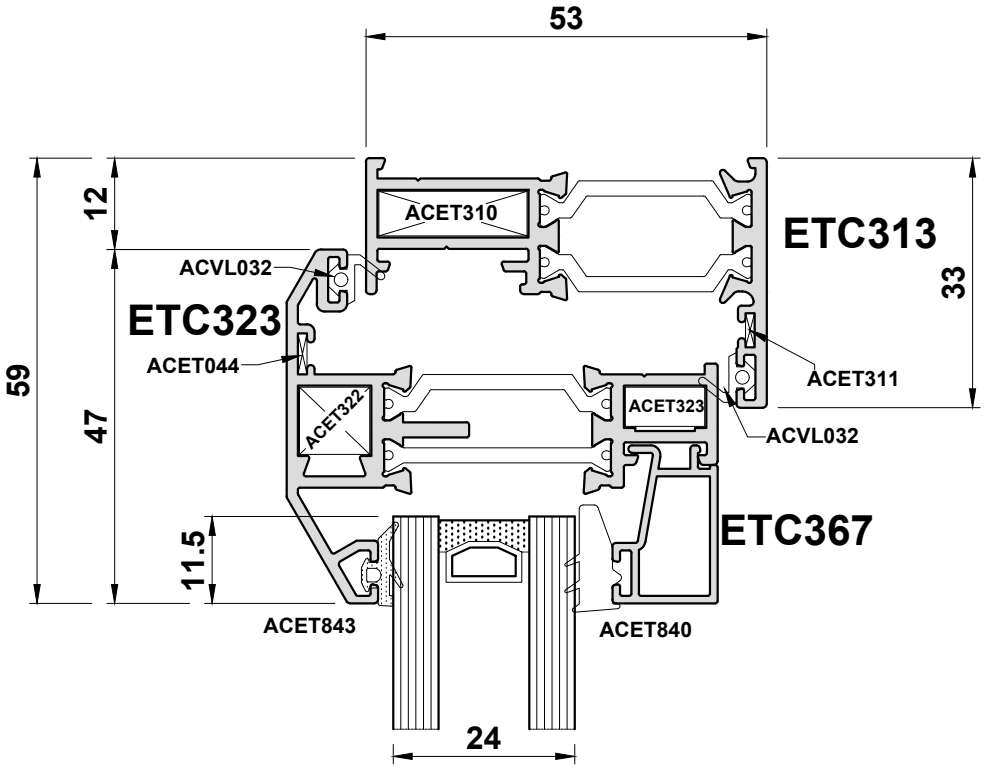

Do Not Scale From This Drawing

Detail 4C

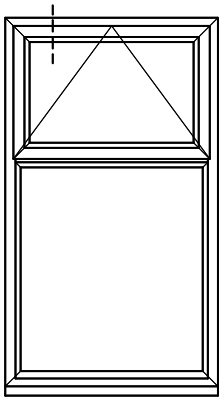

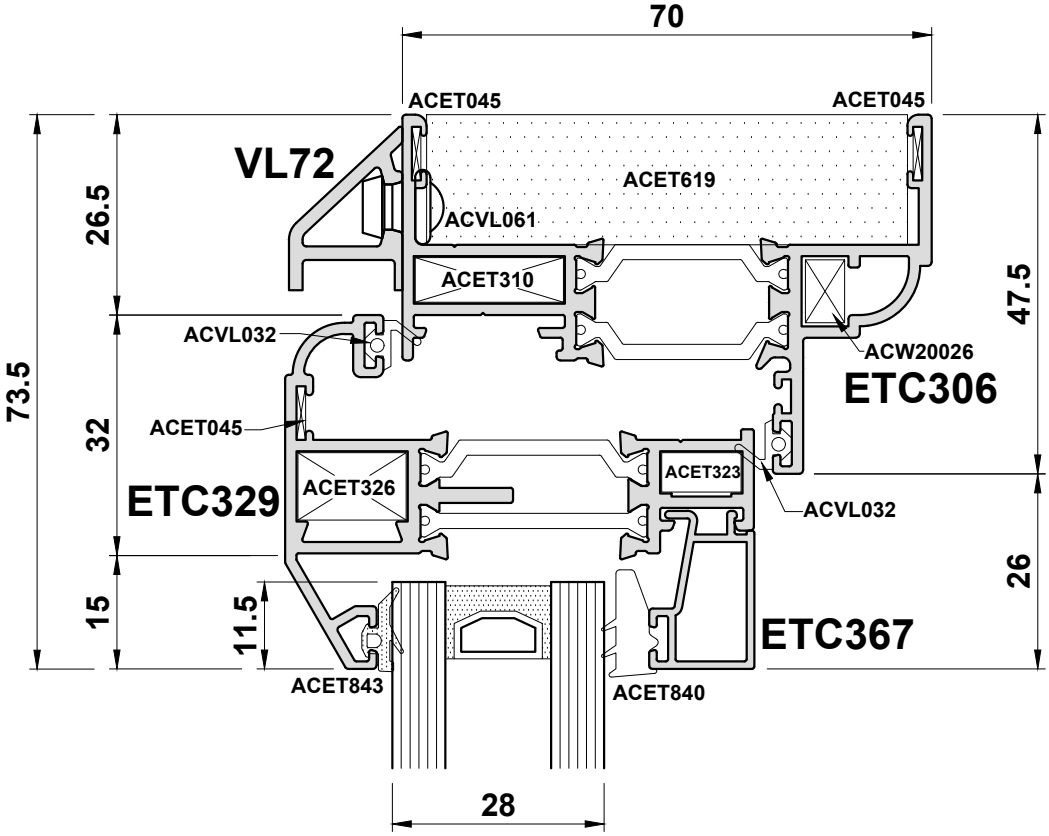

Do Not Scale From This Drawing

Detail 4D

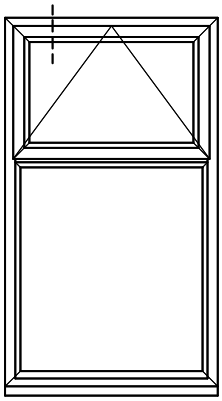

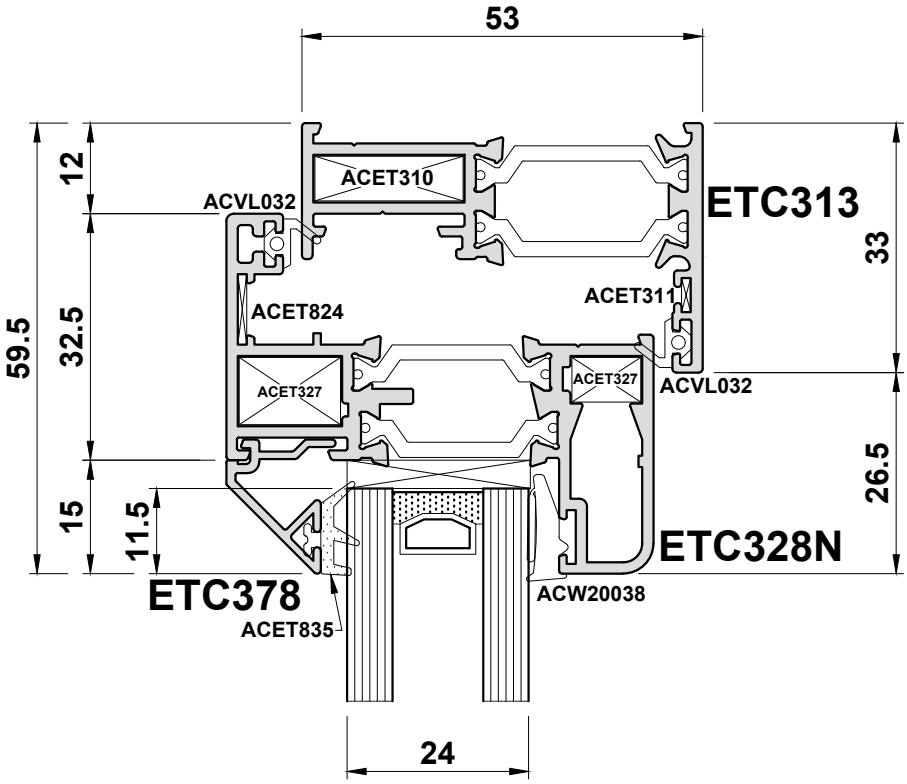

Do Not Scale From This Drawing

Detail 4E

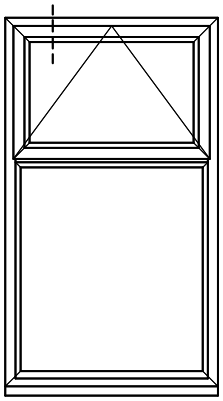

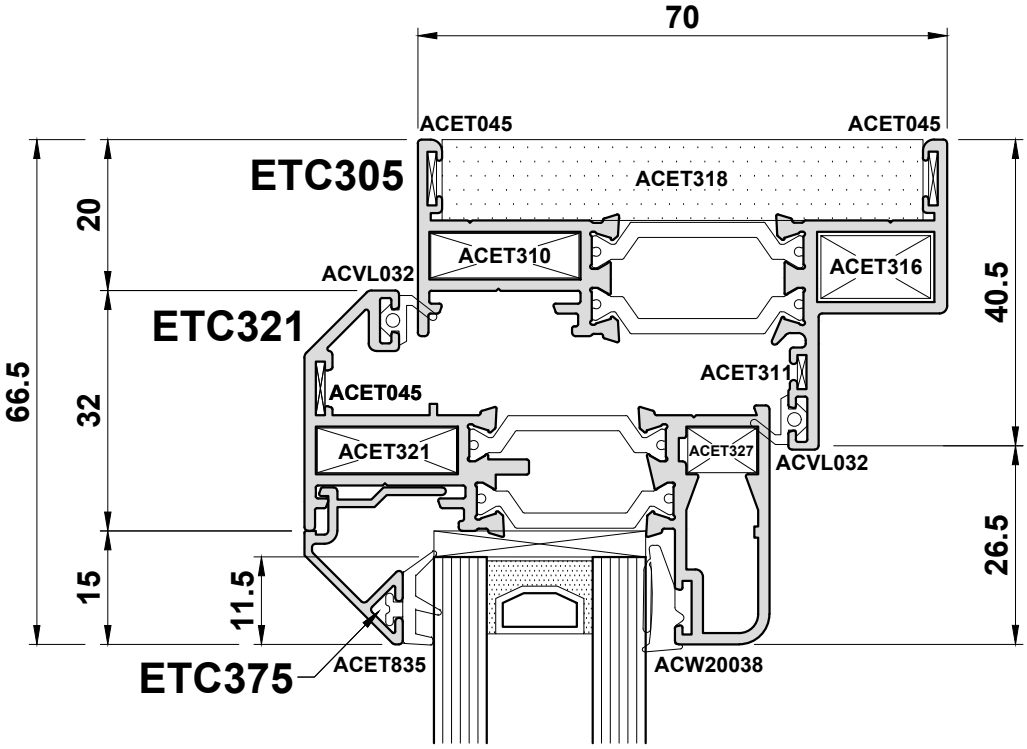

Do Not Scale From This Drawing

Detail 4F

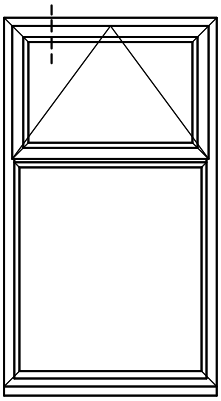

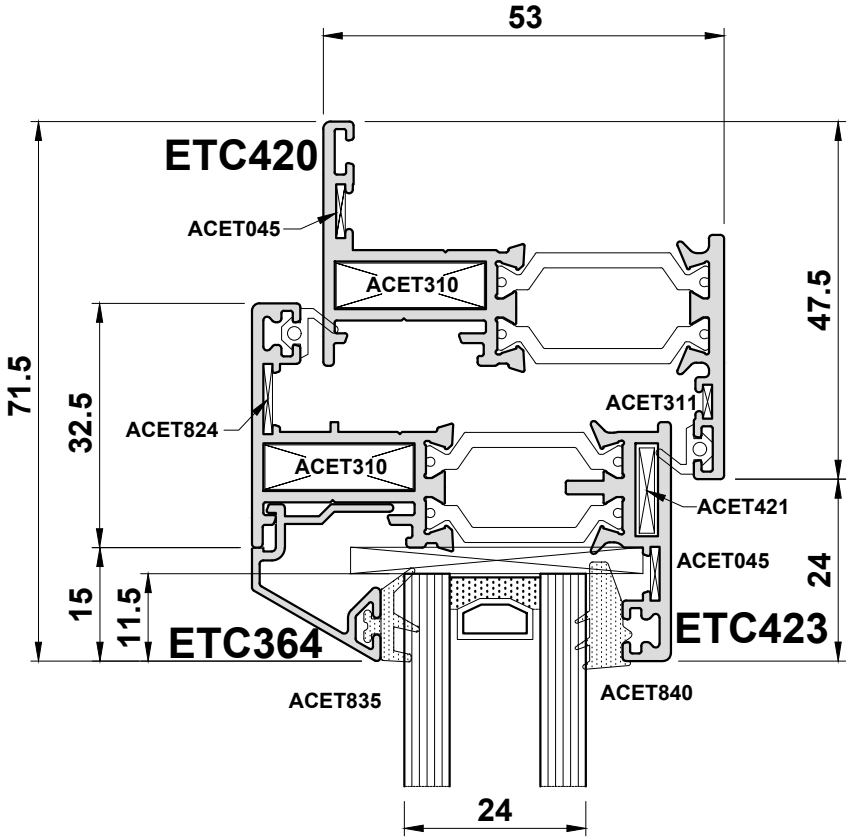

Do Not Scale From This Drawing

Detail 5A

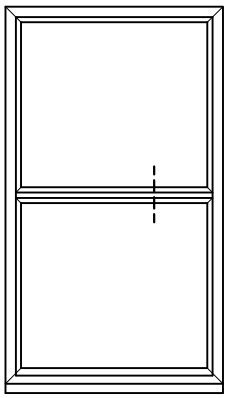

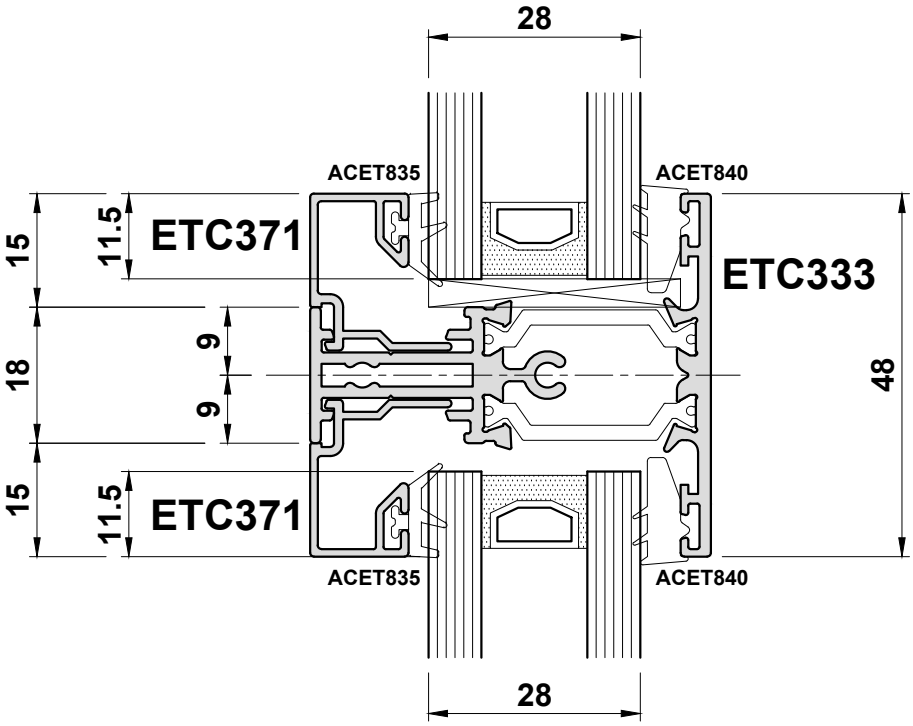

Note: Transoms will drain through the join to the outerframe.

Do Not Scale From This Drawing

Detail 5B

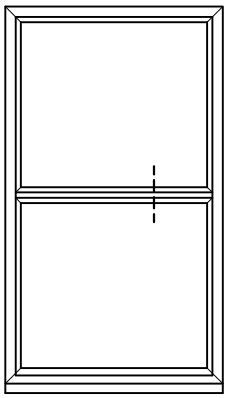

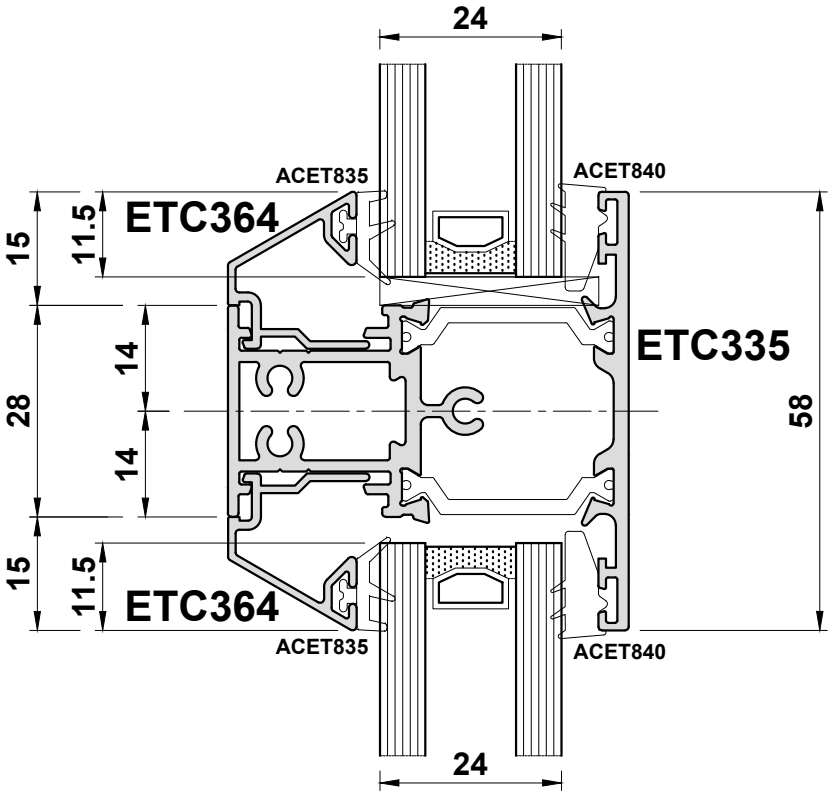

Note: Transoms will drain through the join to the outerframe.

Do Not Scale From This Drawing

Detail 5C

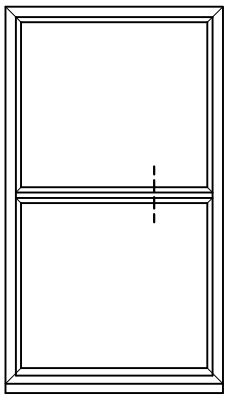

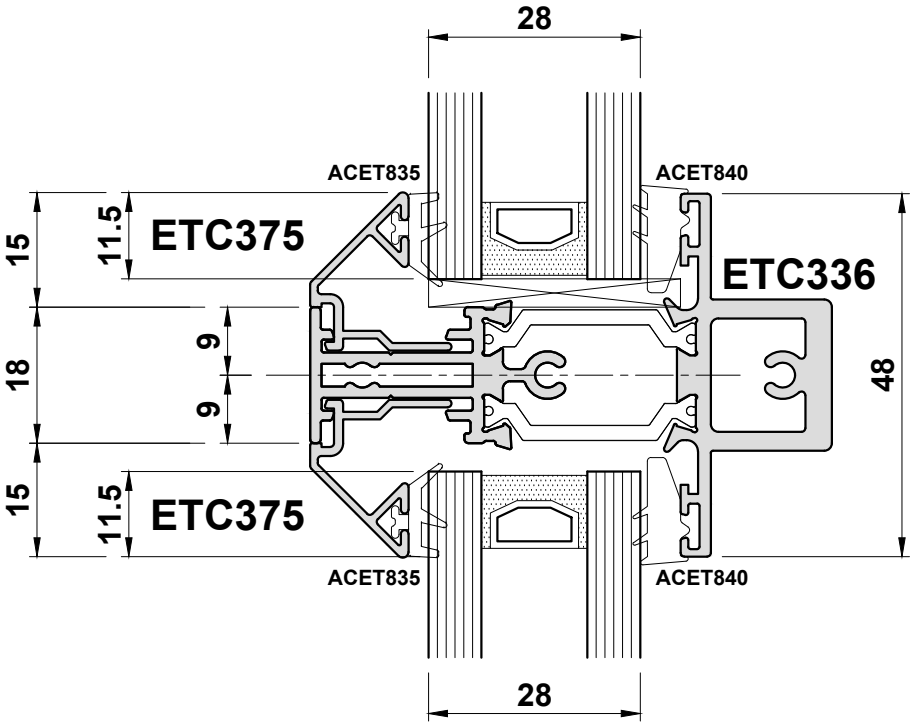

Note: Transoms will drain through the join to the outerframe.

Do Not Scale From This Drawing

Detail 5D

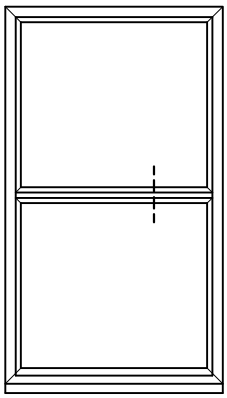

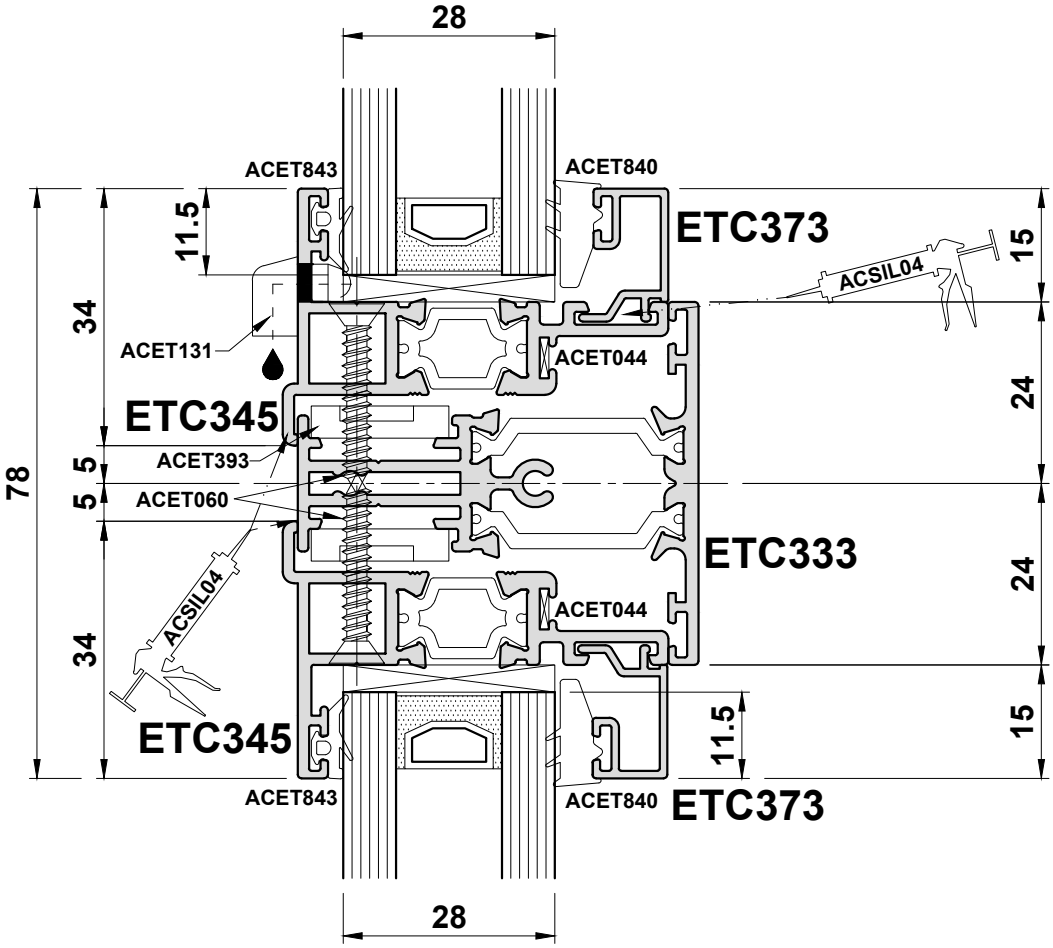

Note: Transoms will drain through the join to the outerframe.

Do Not Scale From This Drawing

Detail 6A

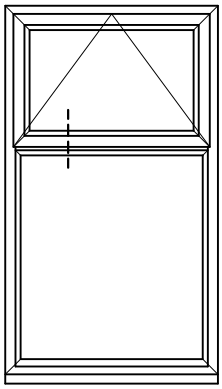

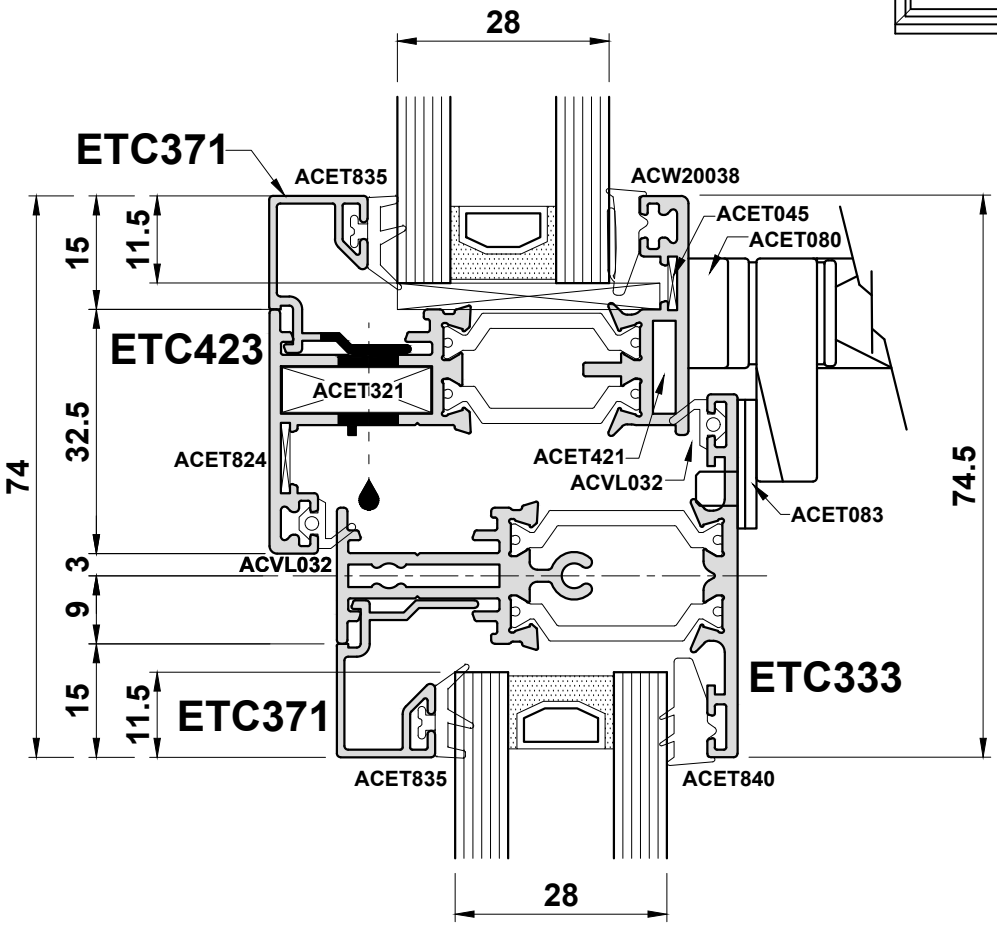

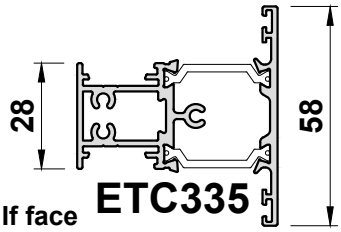

Note: Transoms will drain through the join to the outerframe. If face drainage is preferred, wider transom ETC335 must be used.

Do Not Scale From This Drawing

Detail 6B

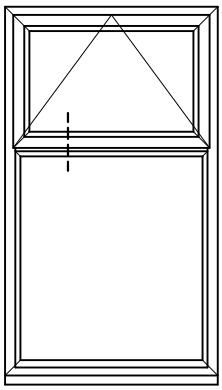

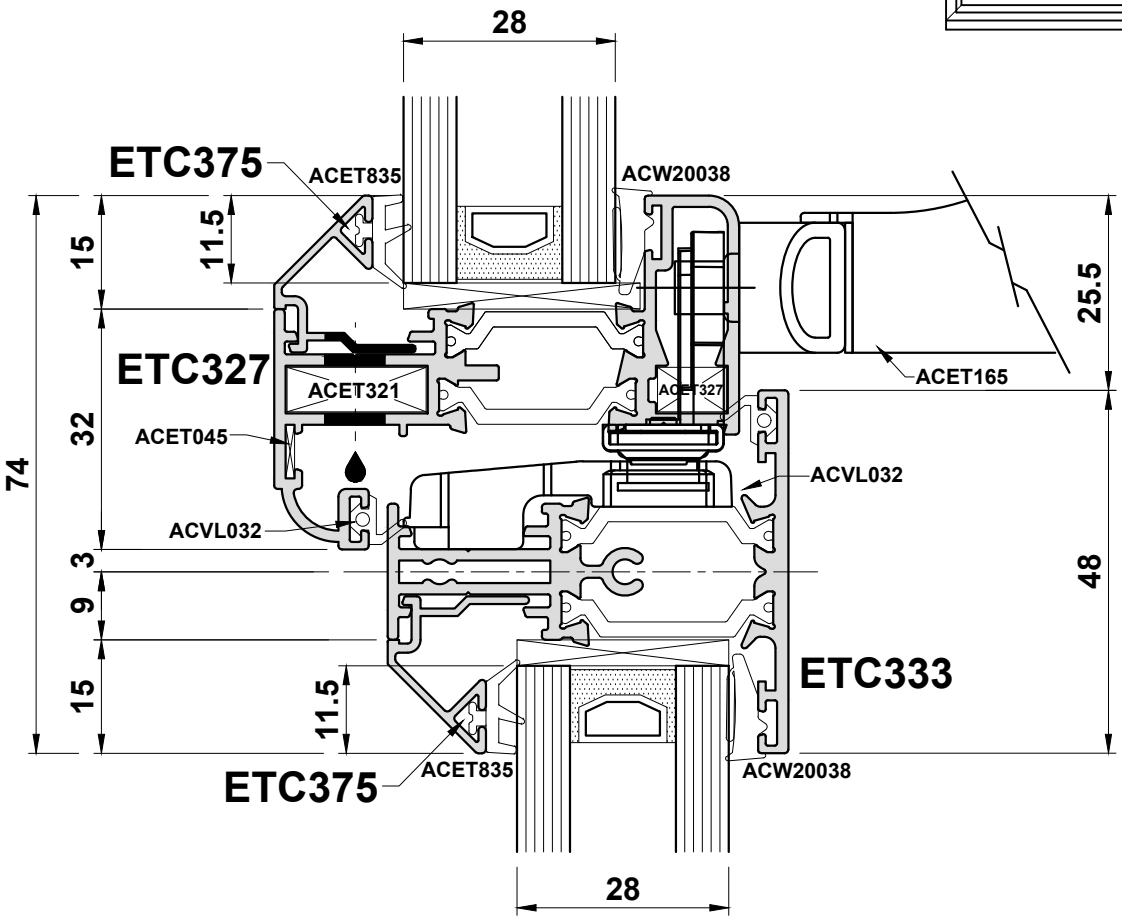

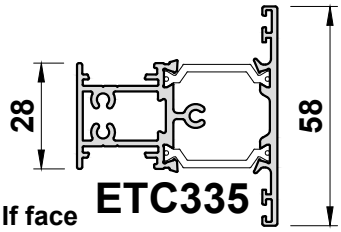

Note: Transoms will drain through the join to the outerframe. If face drainage is preferred, wider transom ETC335 must be used.

Do Not Scale From This Drawing

Detail 6C

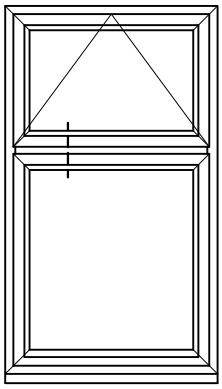

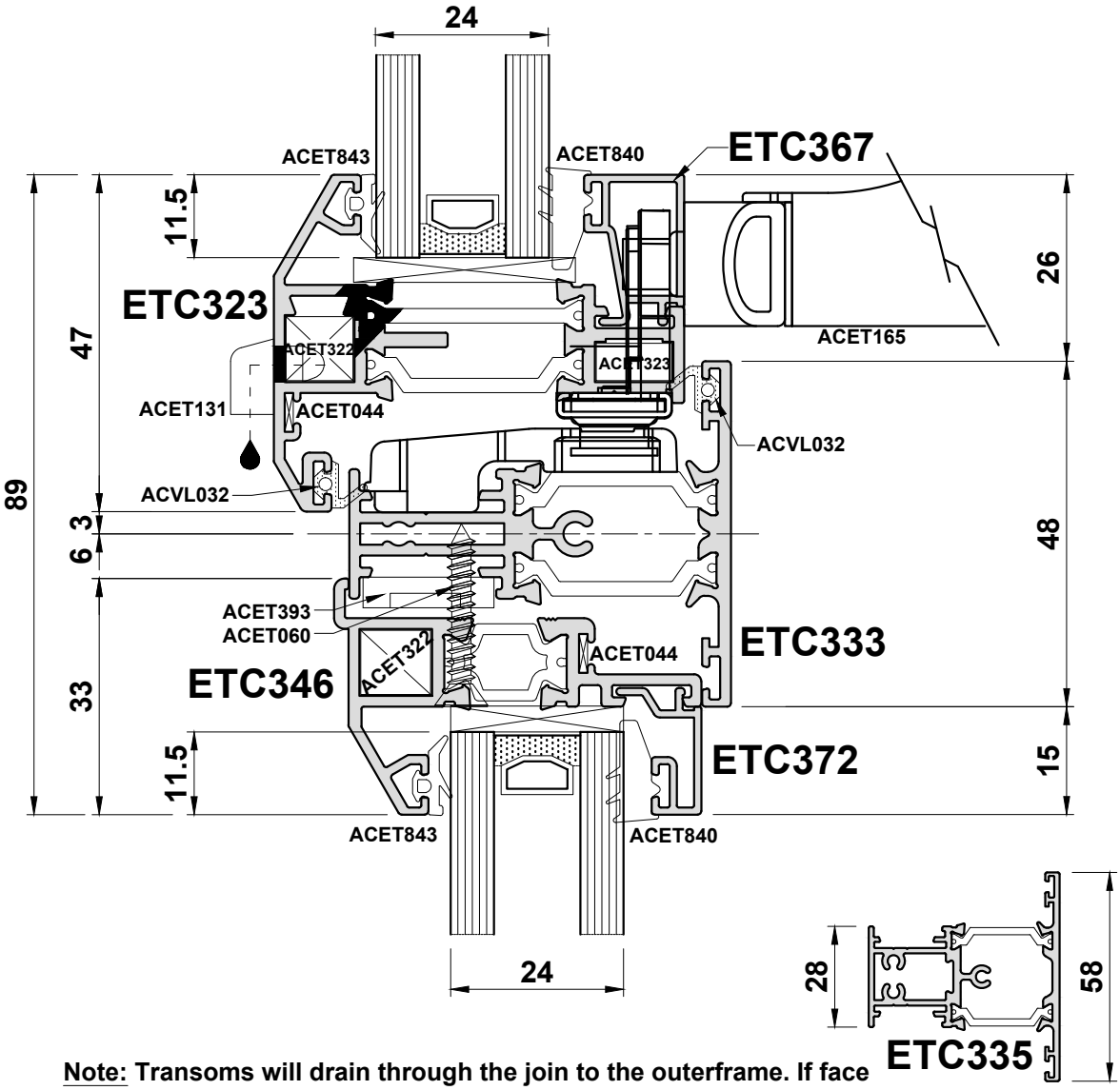

Note: Transoms will drain through the join to the outerframe. If face drainage is preferred, wider transom ETC335 must be used.

Do Not Scale From This Drawing

Detail 6D

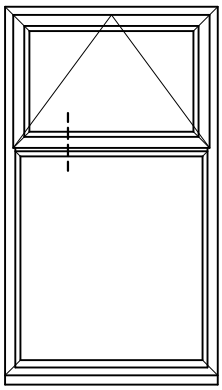

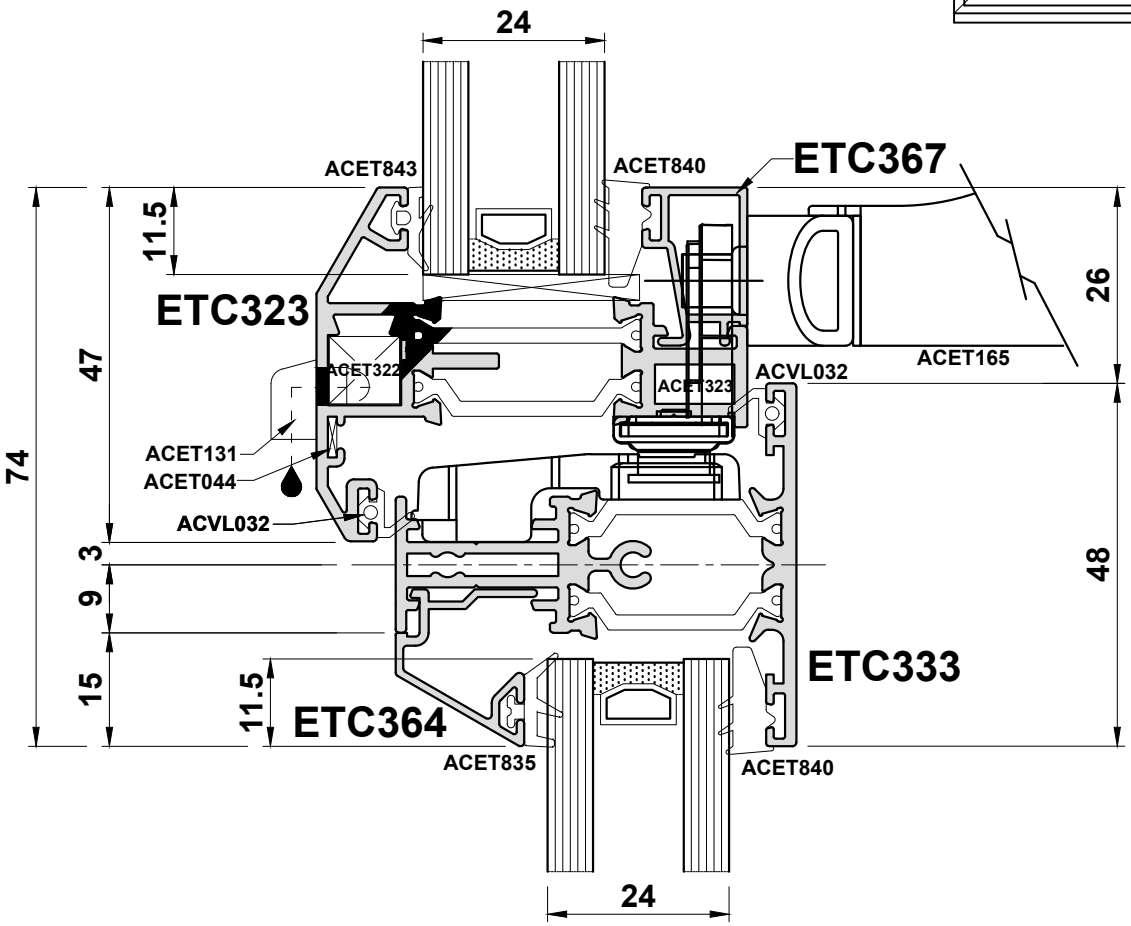

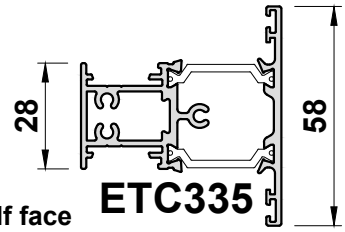

Note: Transoms will drain through the join to the outerframe. If face drainage is preferred, wider transom ETC335 must be used.

Do Not Scale From This Drawing

Detail 6E

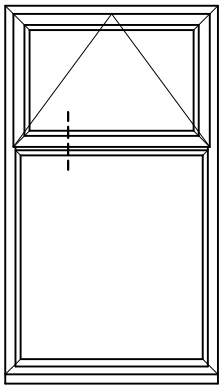

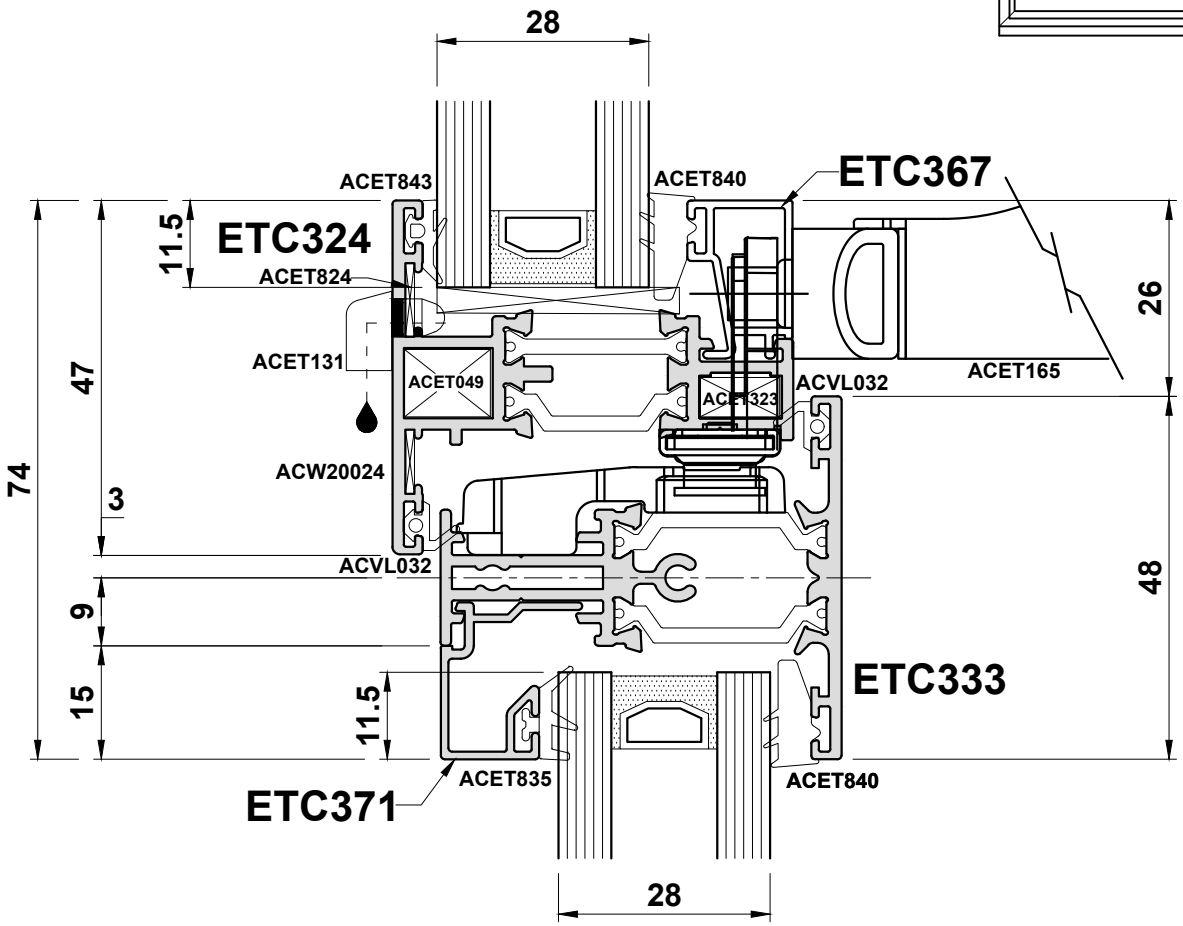

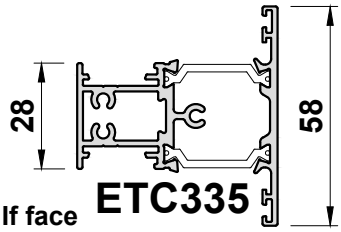

Note: Transoms will drain through the join to the outerframe. If face drainage is preferred, wider transom ETC335 must be used.

Do Not Scale From This Drawing

Detail 7A

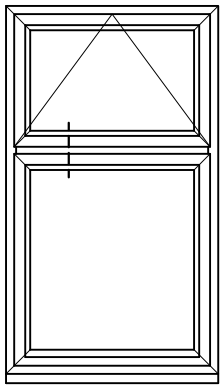

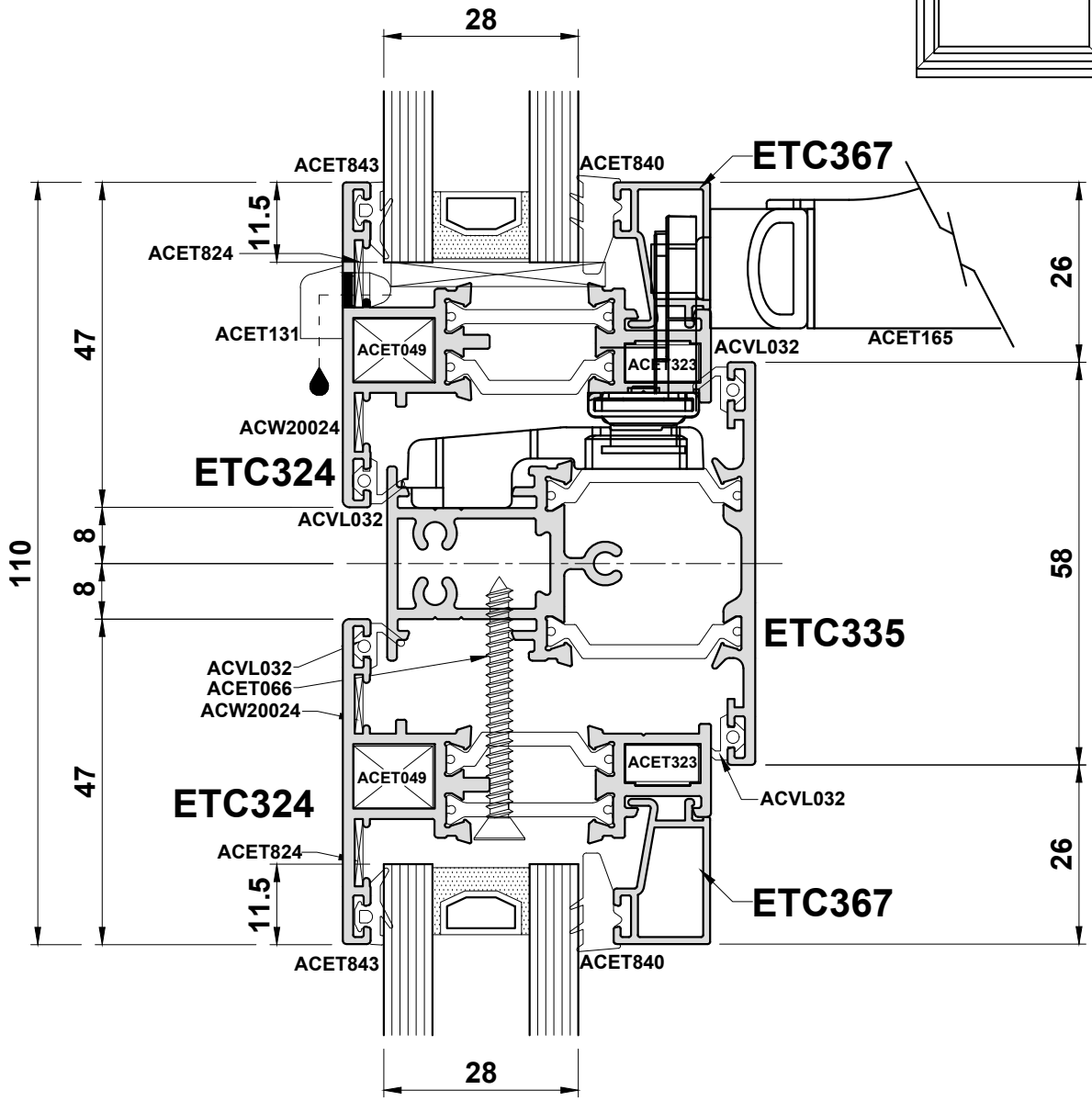

Note: Transoms will drain through the join to the outerframe.

Do Not Scale From This Drawing

Detail 7B

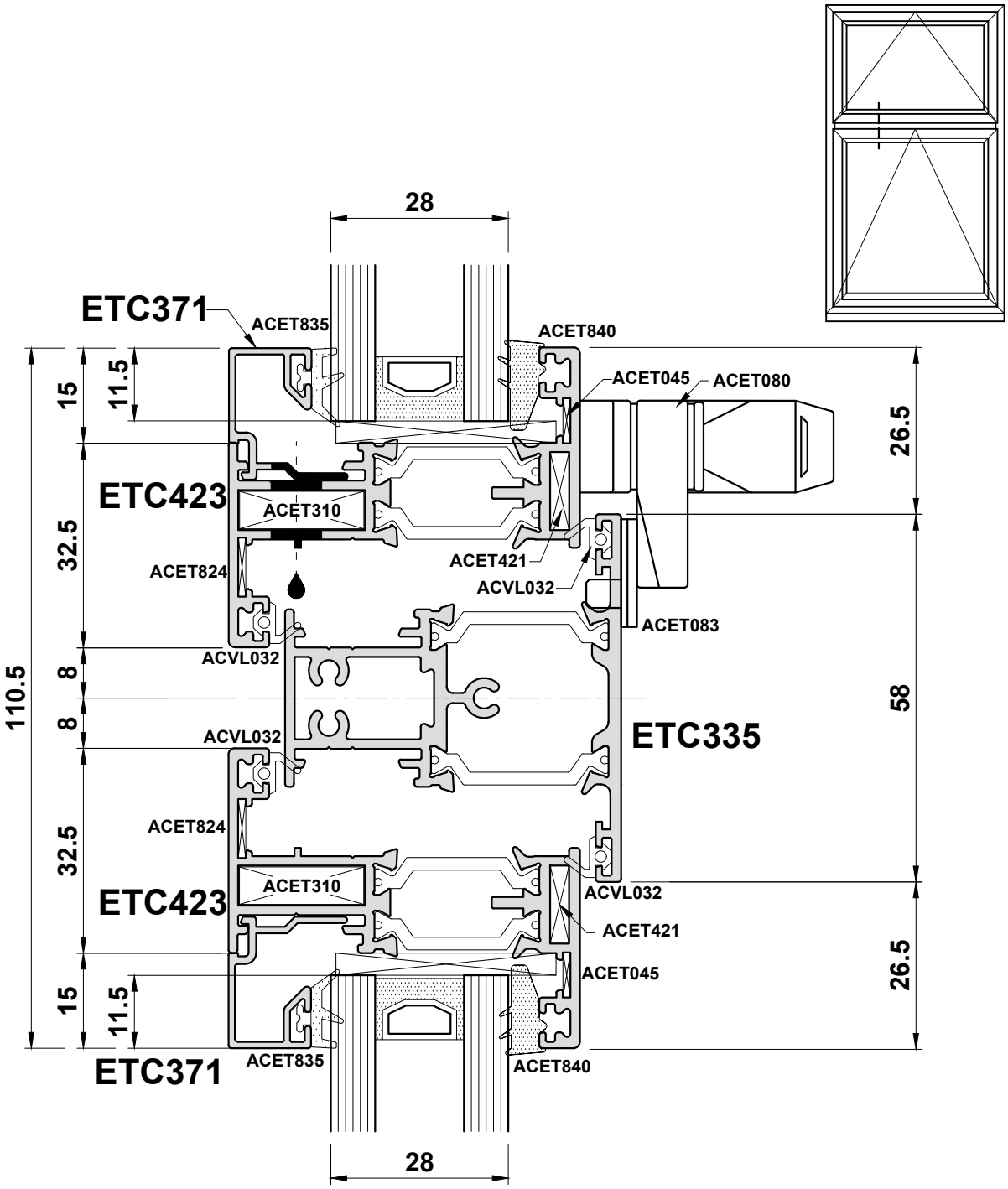

Note: Transoms will drain through the join to the outerframe.

Do Not Scale From This Drawing

Detail 7E

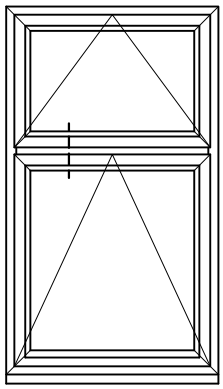

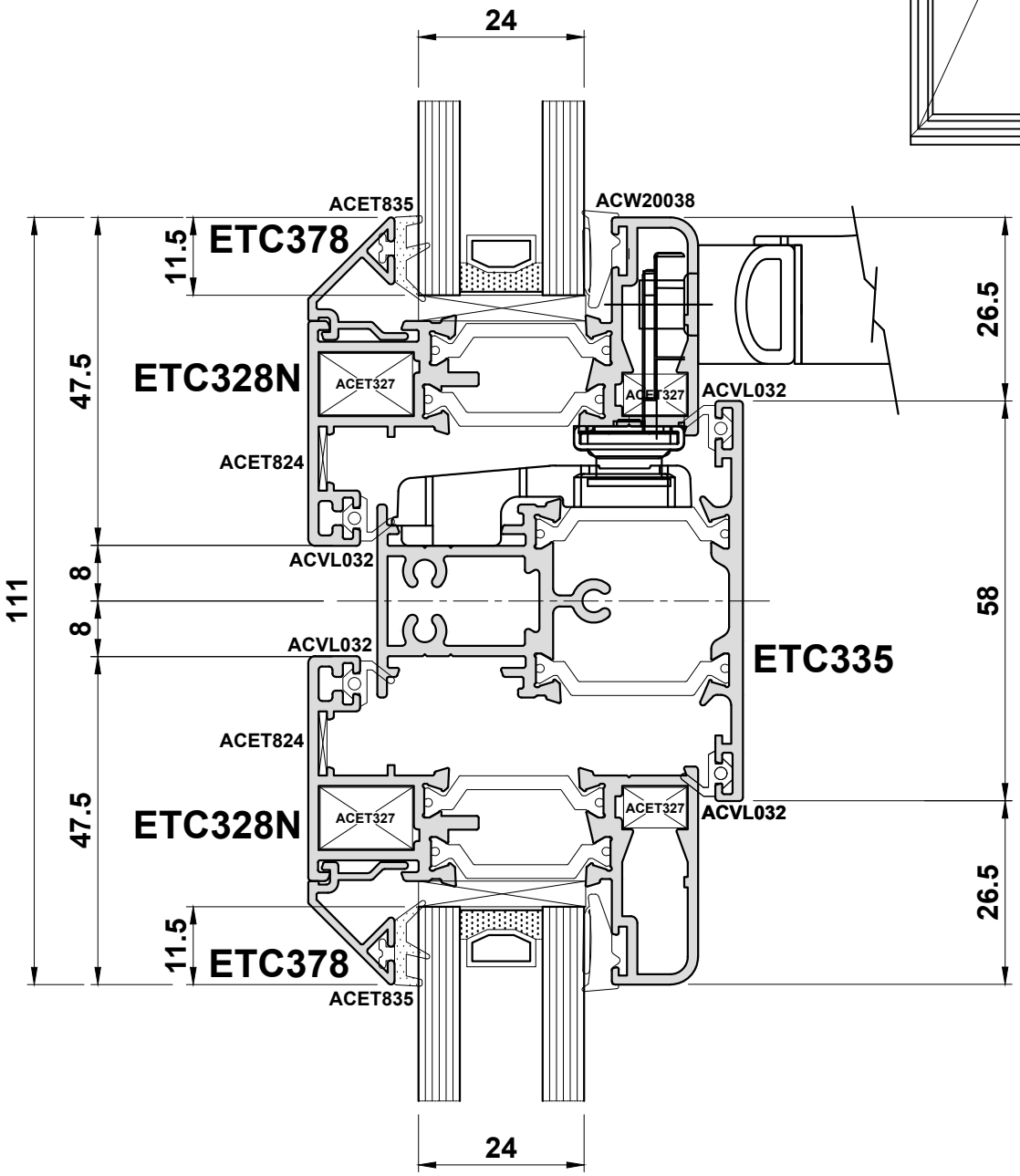

Note: Transoms will drain through the join to the outerframe.

Do Not Scale From This Drawing

Detail 8A

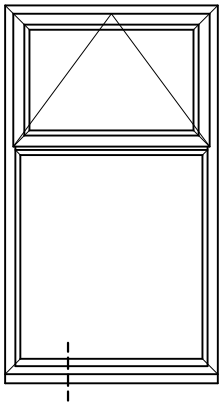

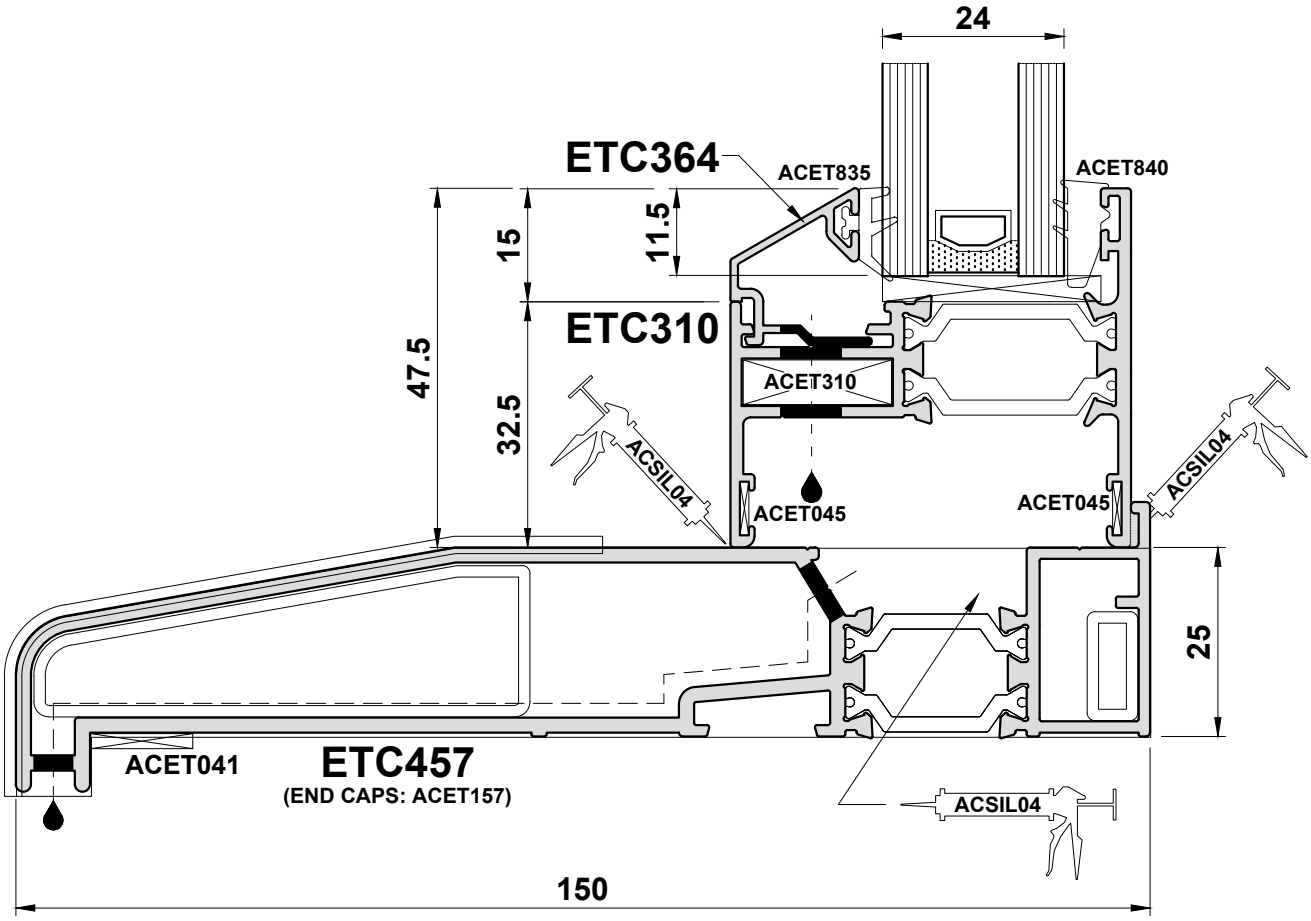

Cill end caps should be sealed to cill to prevent water egress over edge

Do Not Scale From This Drawing

Detail 8B

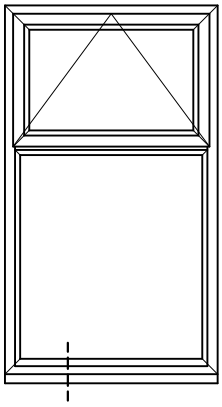

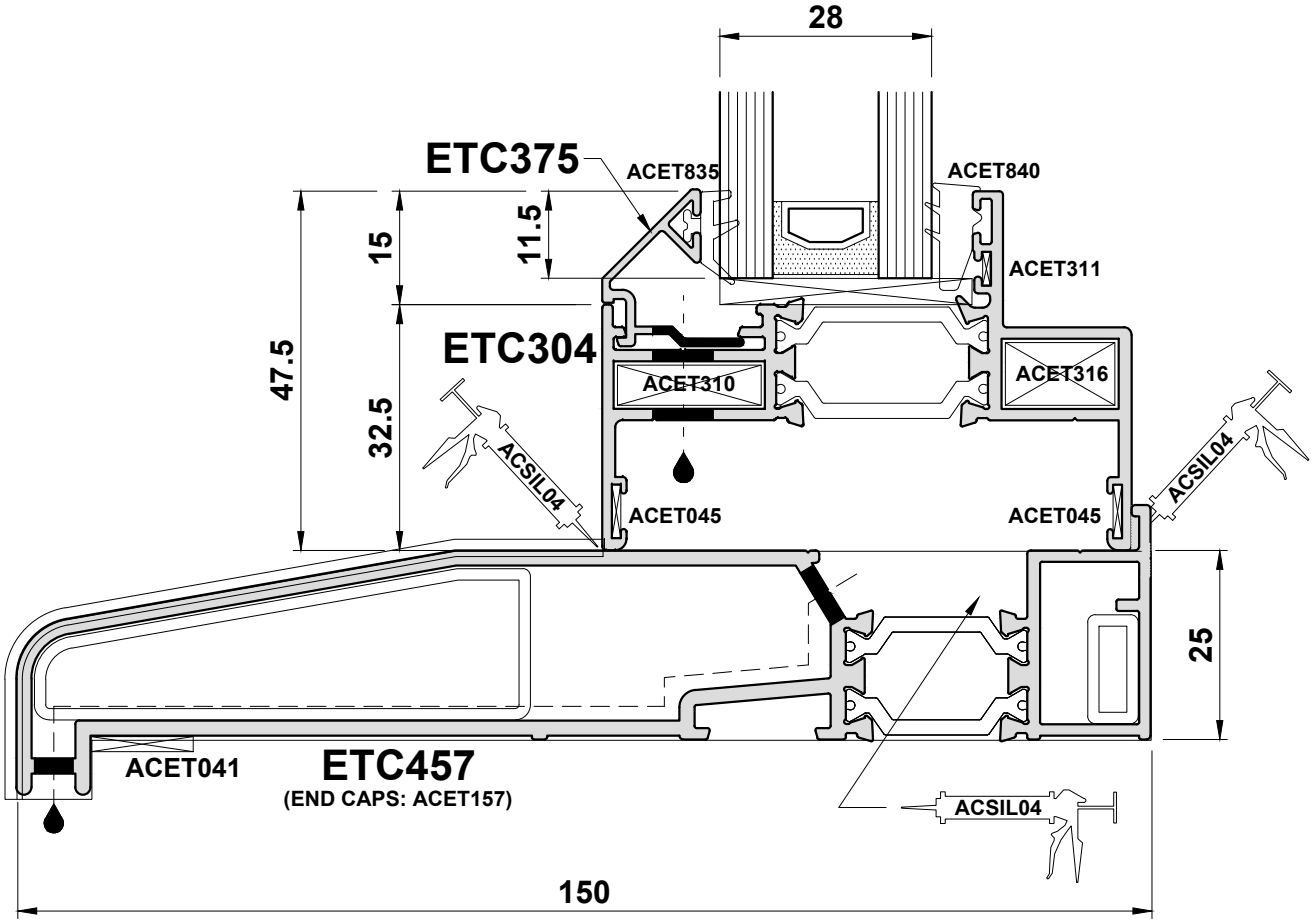

Cill end caps should be sealed to cill to prevent water egress over edge

Do Not Scale From This Drawing

Detail 8C

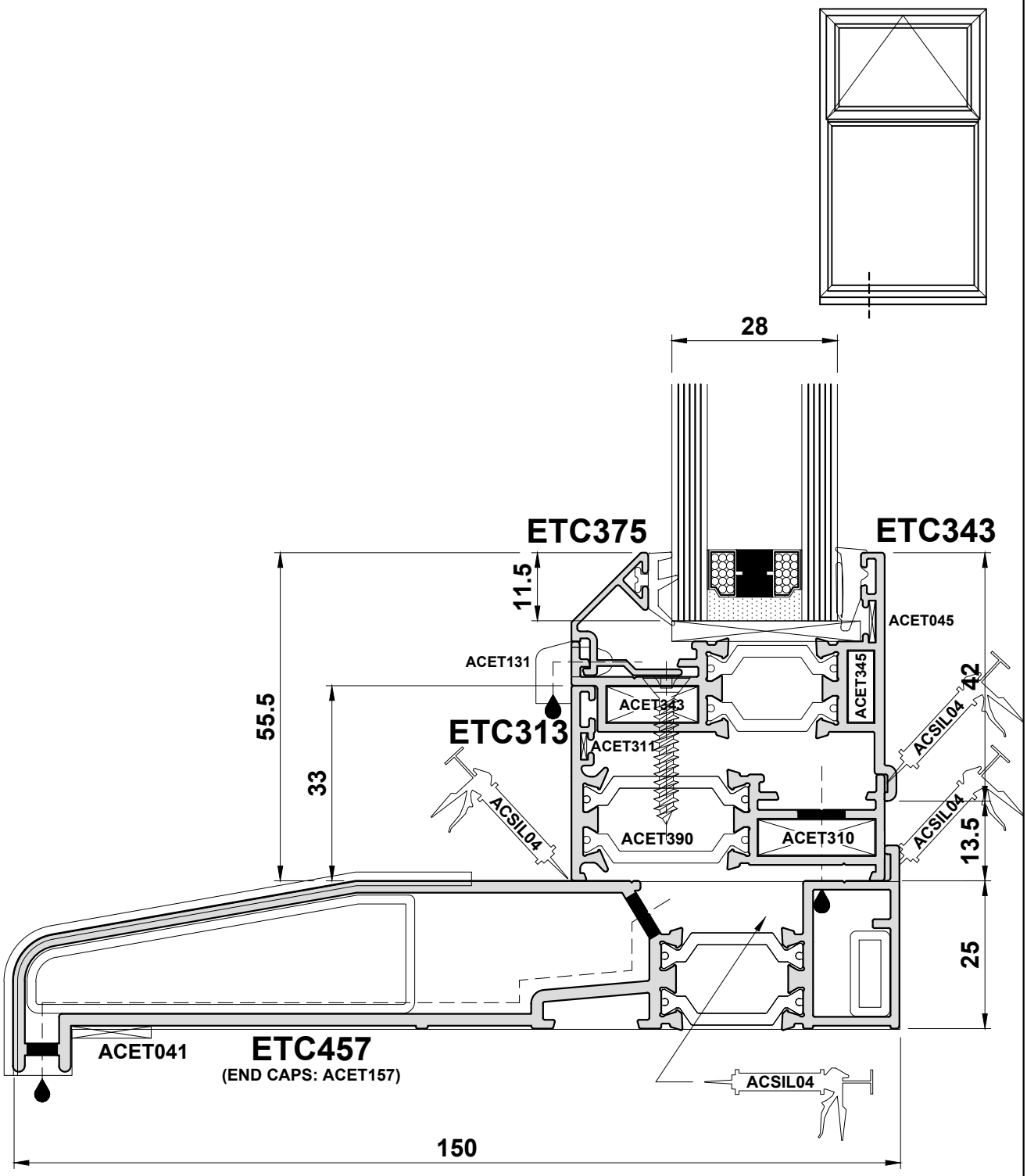

Note: Where ETC343 is used, concealed drainage through a cill is recommended.

Do Not Scale From This Drawing

Detail 9A

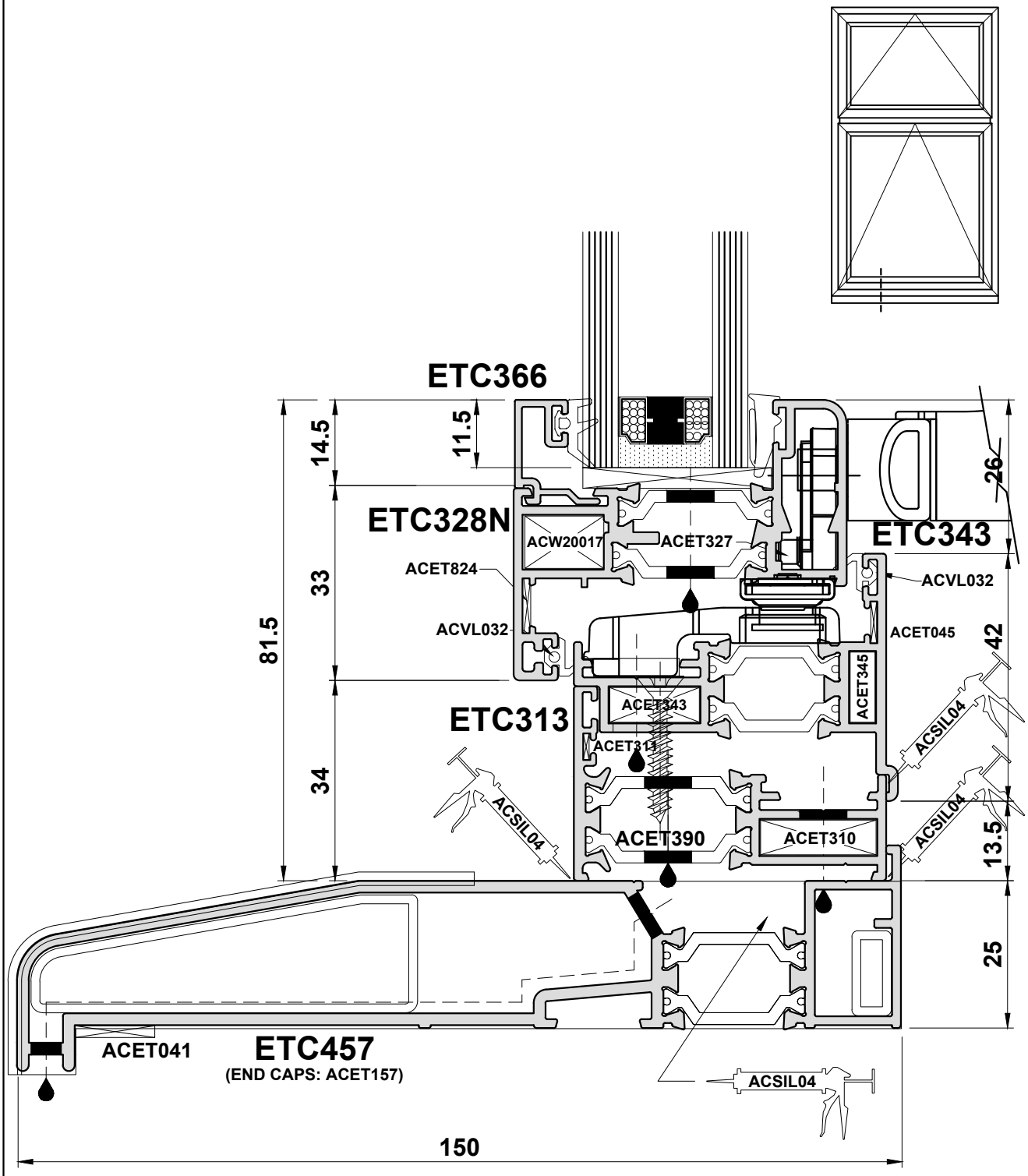

Note: Where ETC343 is used, concealed drainage through a cill is recommended.

Do Not Scale From This Drawing

Detail 9B

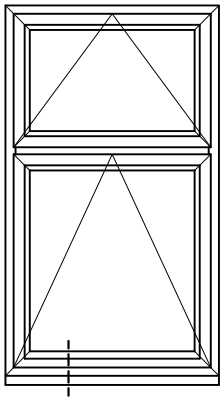

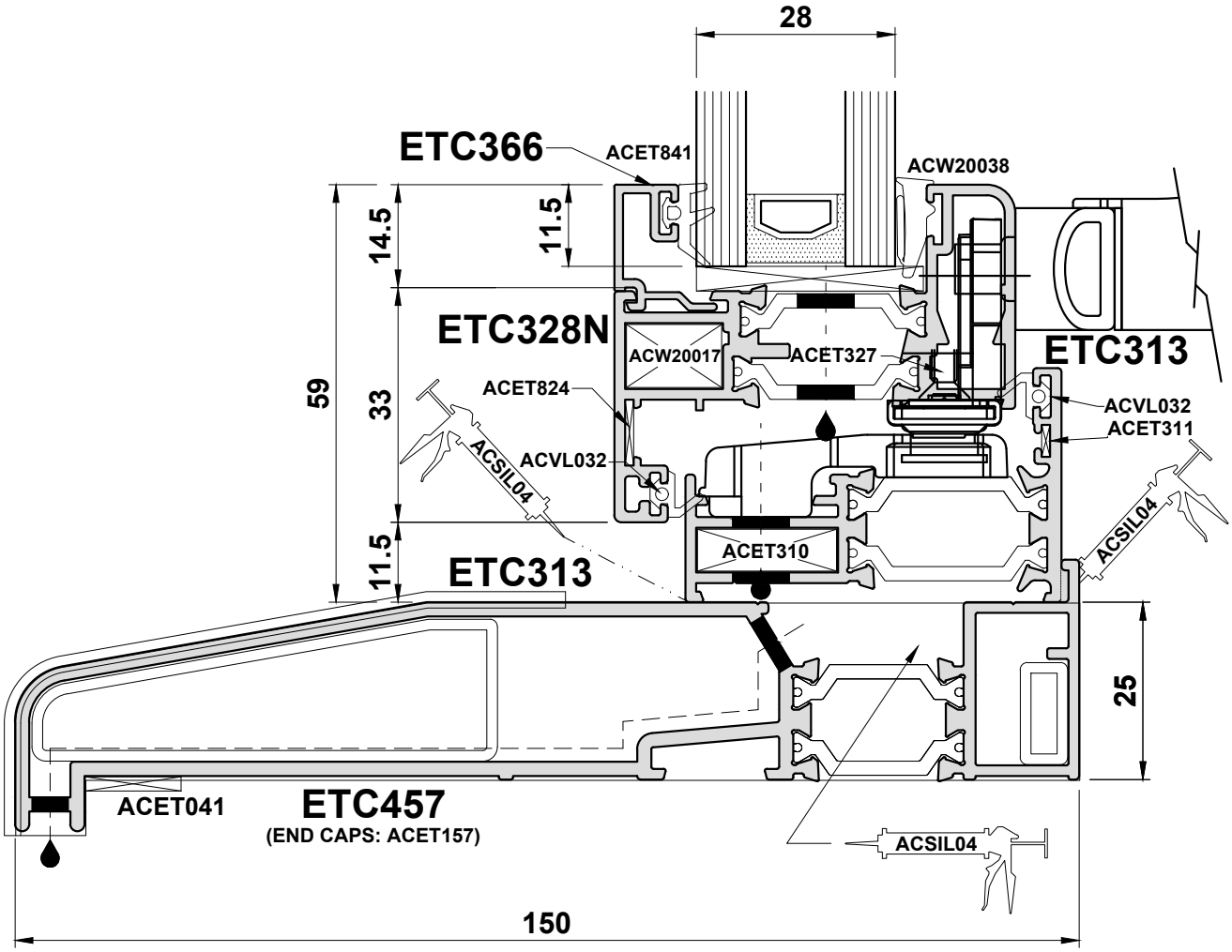

Cill end caps should be sealed to cill to prevent water egress over edge

Do Not Scale From This Drawing

Detail 9C

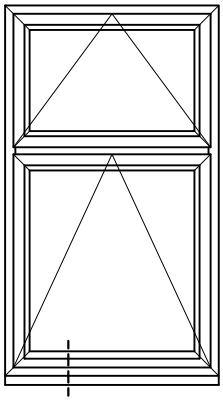

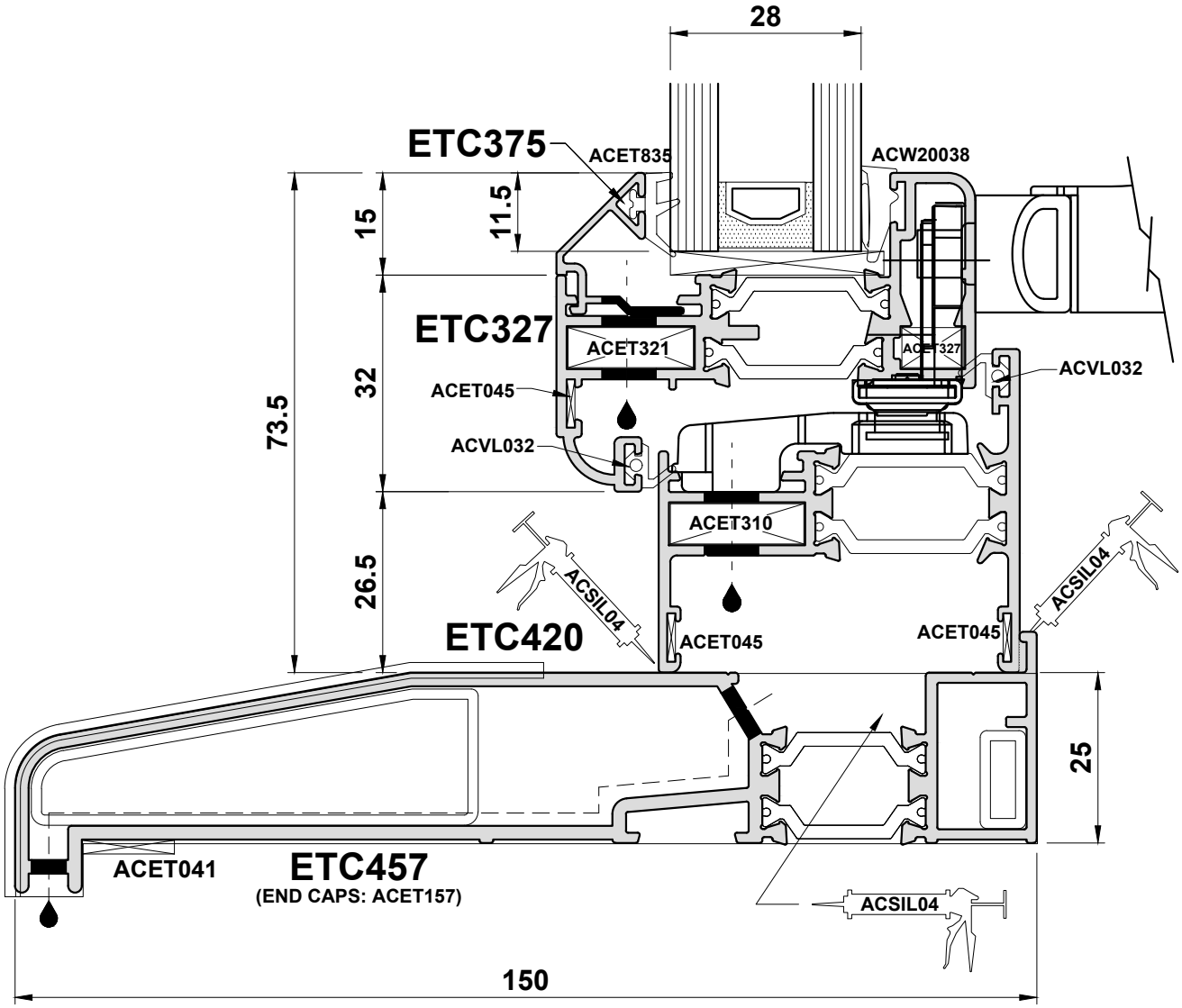

Cill end caps should be sealed to cill to prevent water egress over edge

Do Not Scale From This Drawing

Detail 9D

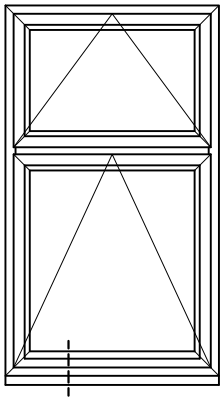

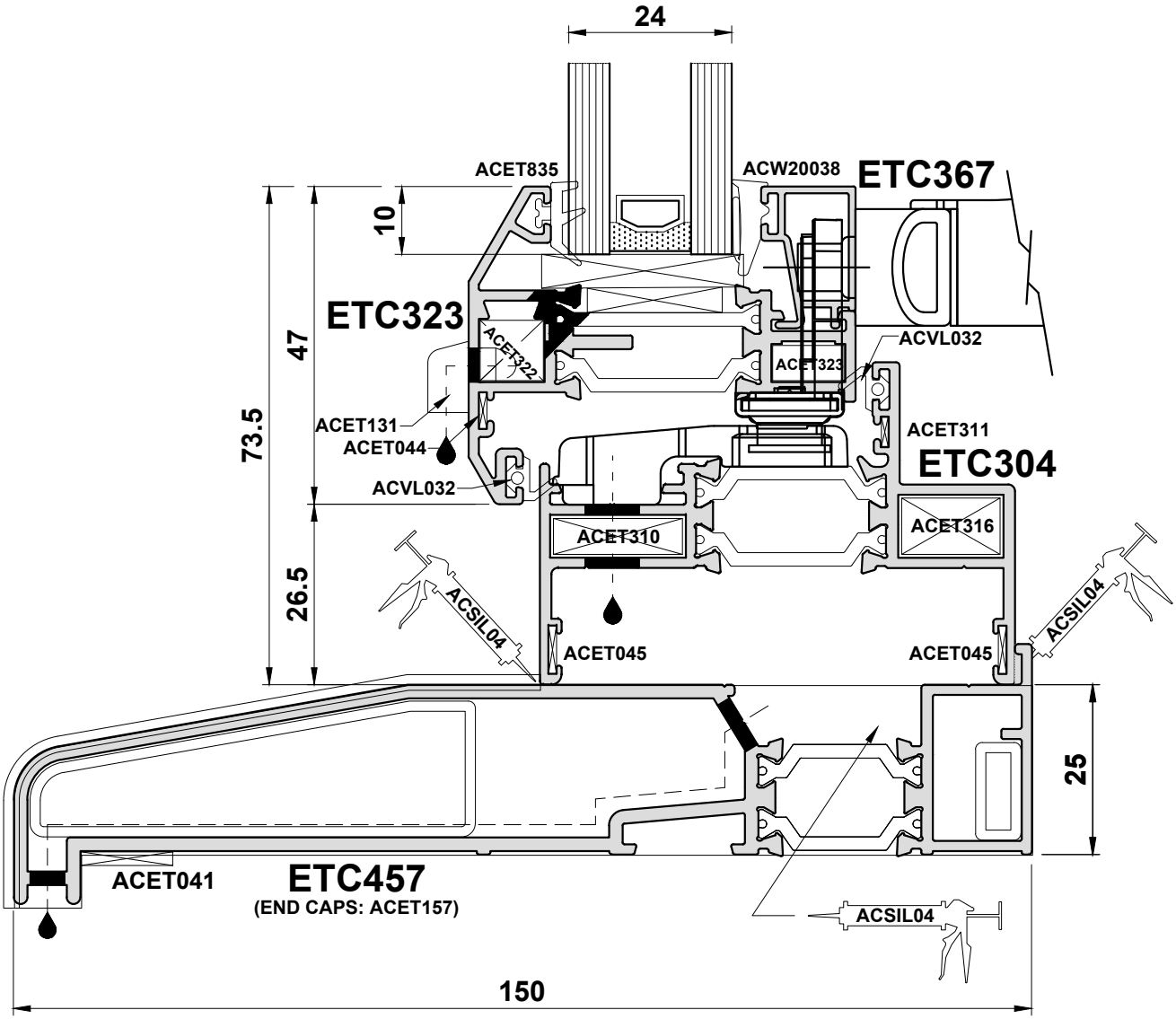

Cill end caps should be sealed to cill to prevent water egress over edge

Do Not Scale From This Drawing

Detail 9E

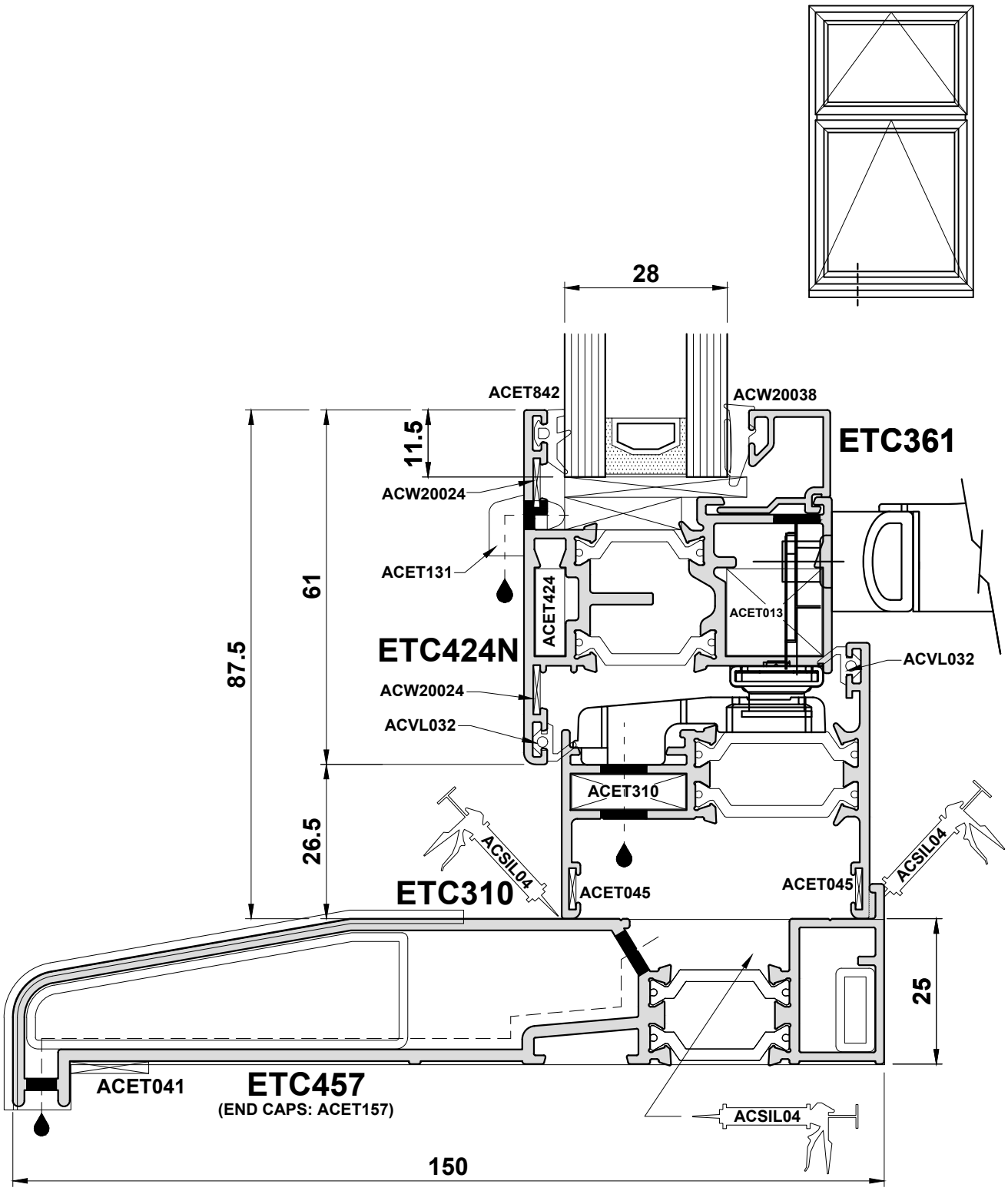

Cill end caps should be sealed to cill to prevent water egress over edge

Do Not Scale From This Drawing

Detail 10A

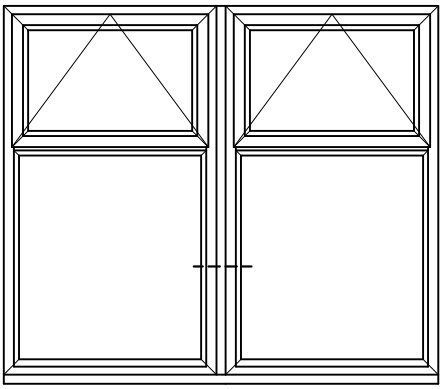

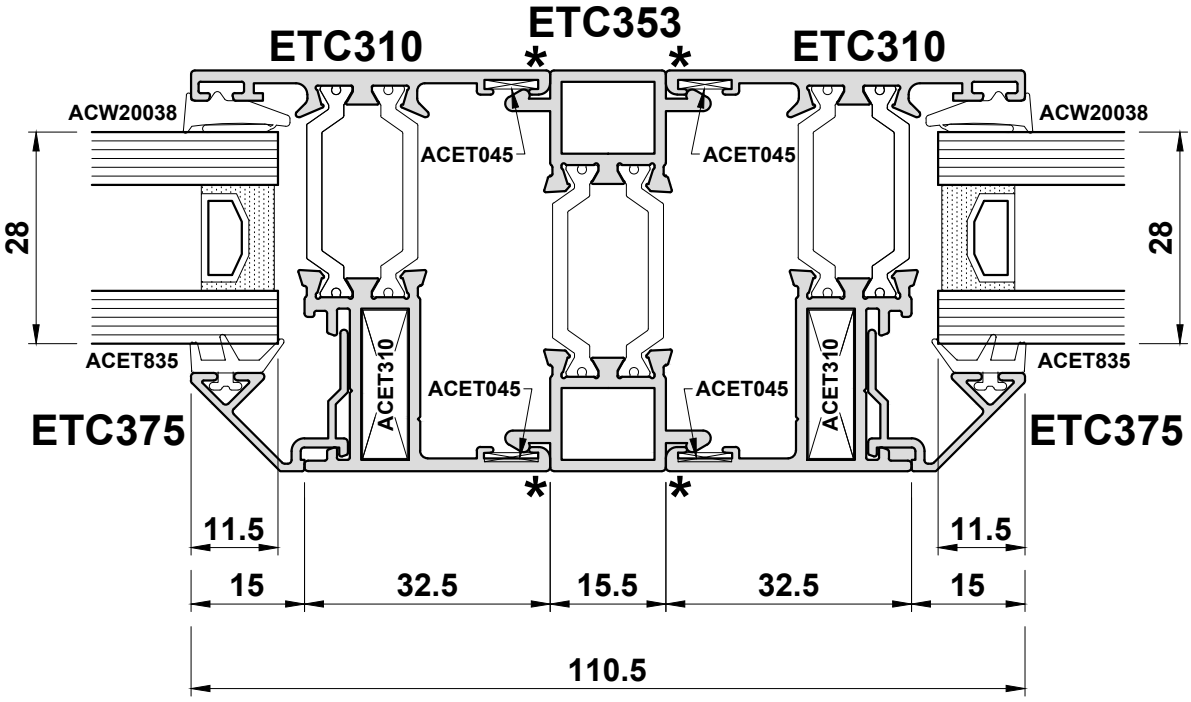

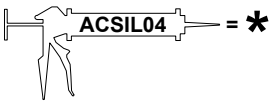

Do Not Scale From This Drawing

Detail 10B

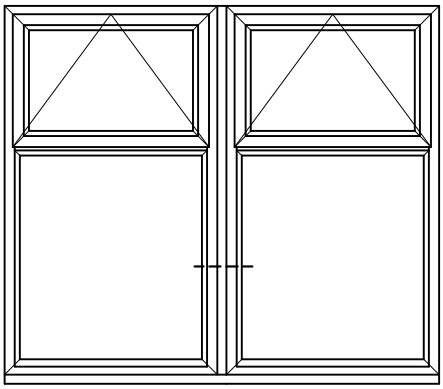

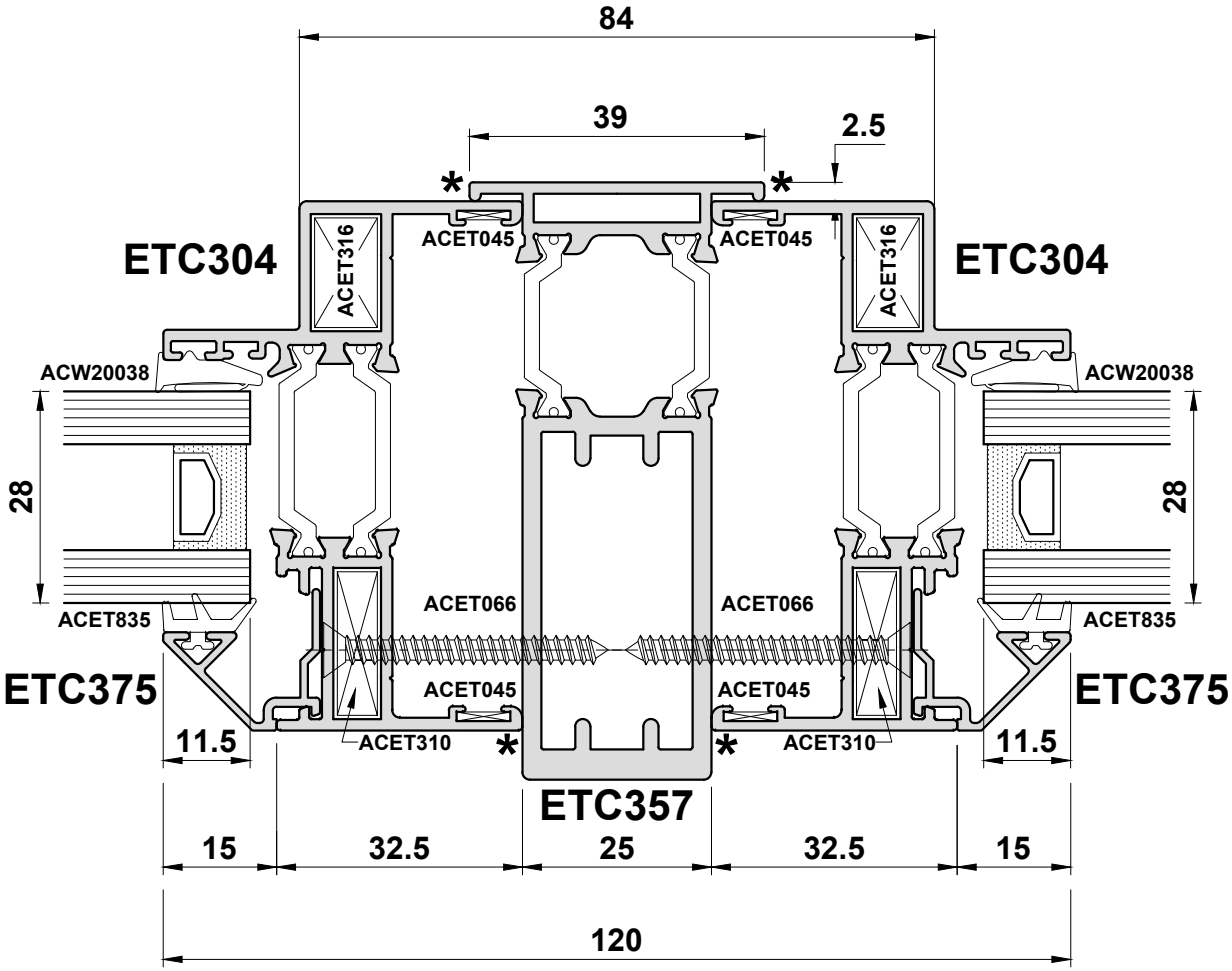

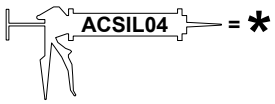

Do Not Scale From This Drawing

Detail 10C

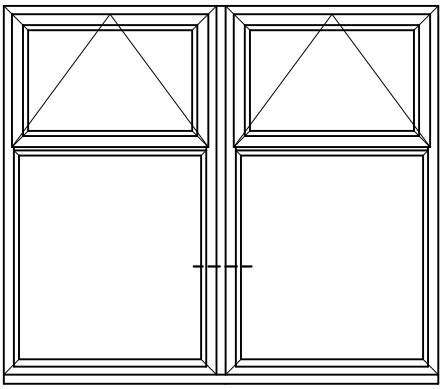

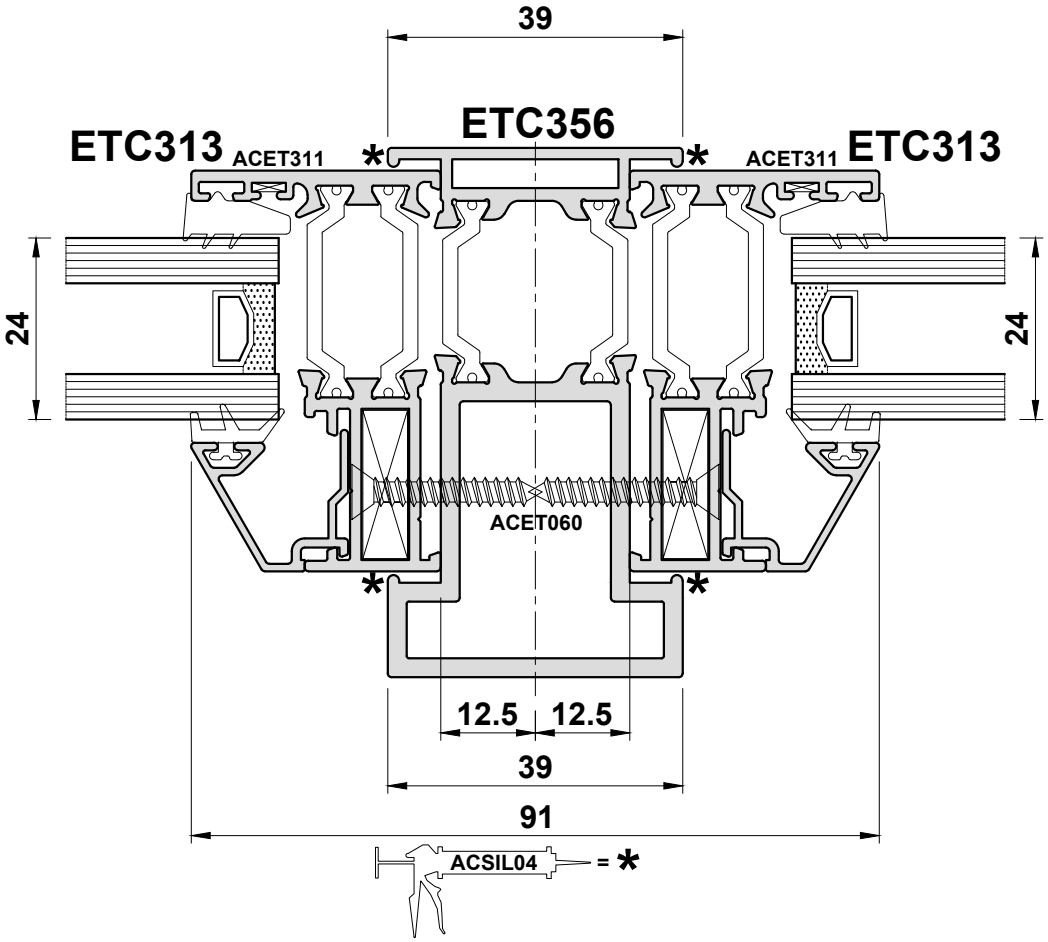

Do Not Scale From This Drawing

Detail 10D

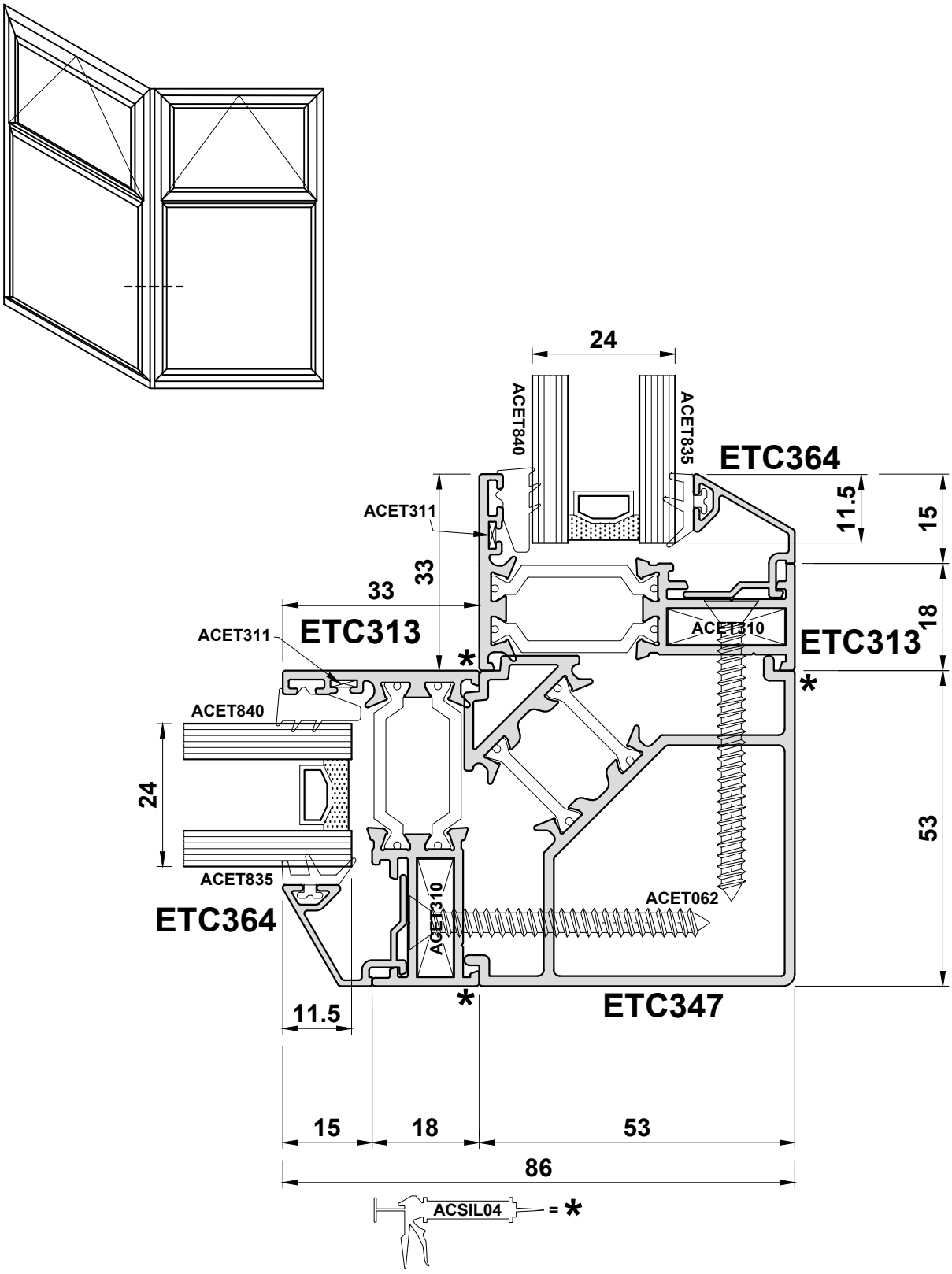

Do Not Scale From This Drawing

Detail 10E

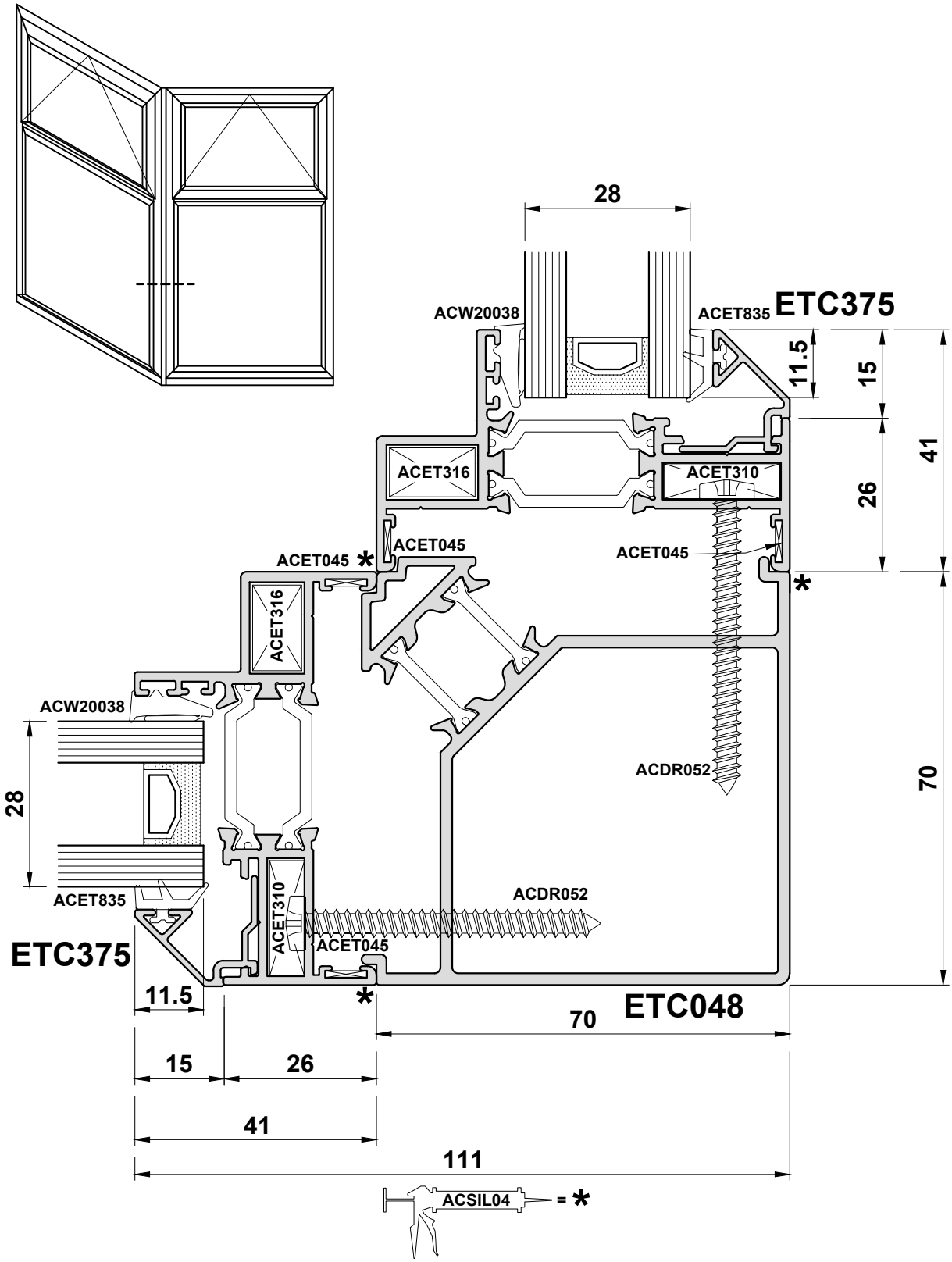

Do Not Scale From This Drawing

Detail 10F

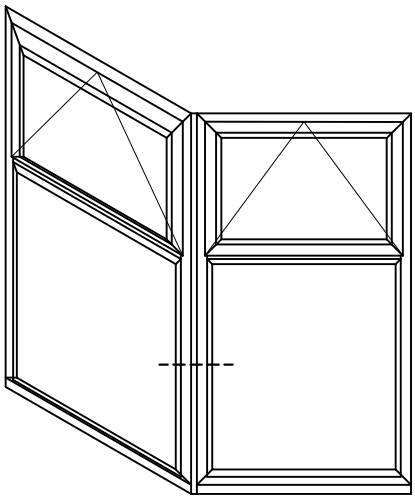

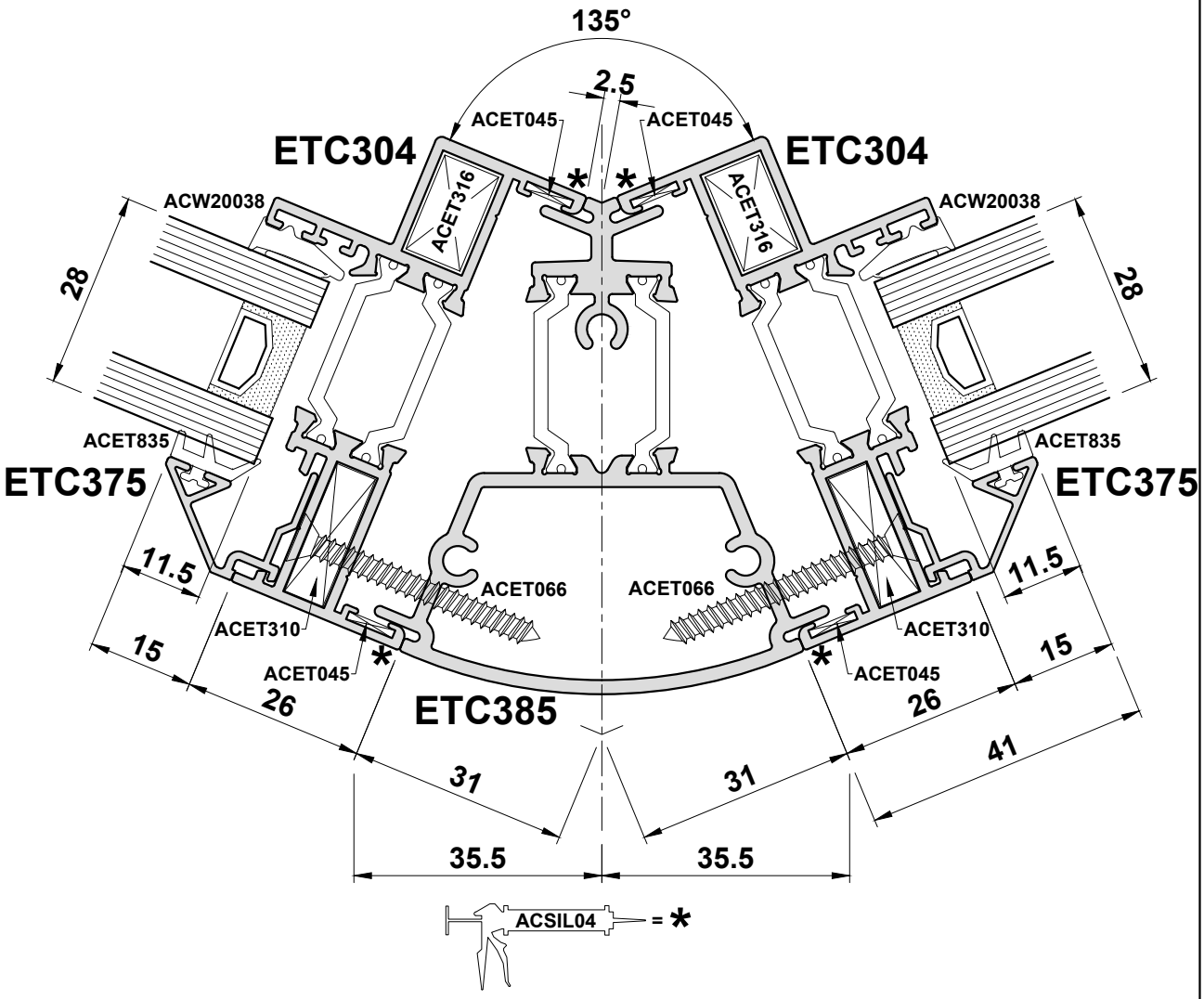

Do Not Scale From This Drawing

Detail 10G

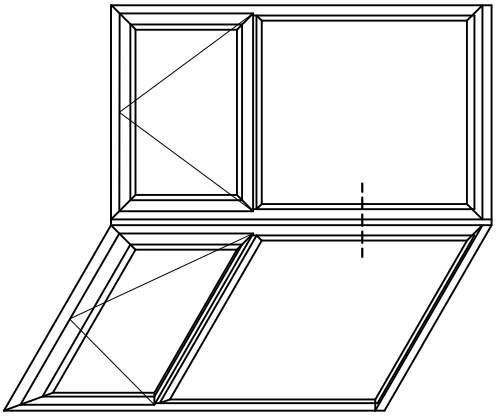

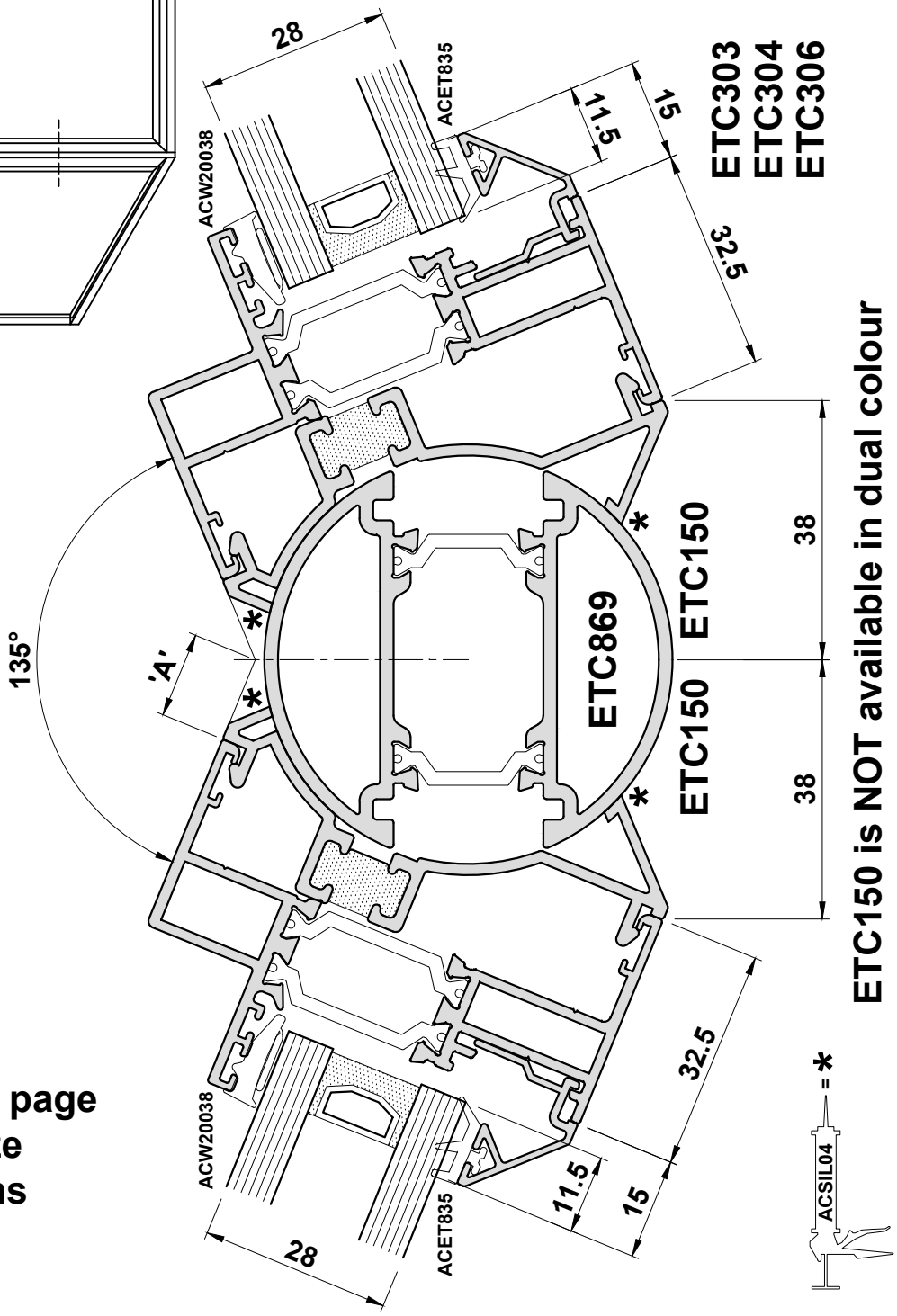

ETC150 is NOT available in dual colour

Please refer to page E23 for size calculations

Do Not Scale From This Drawing

Section D

Statics

For Wind Loading Limitations,
Please Contact
The Technical Department.
Tel : +44 (0) 1934 876 100

Section E

Construction Drawings

Index

E ETC

E 1	1 - Corner Jointing	Page E03 - E05
E 2	2 - Drainage	Page E06 - E07
E 3	3 - Angular Sub Cill	Page E08
E 4	4 - Transom/Mullion Preparation	Page E09 - E11
E 5	5 - Hinges	Page E12 - E14
E 6	6 - Locking Hardware	Page E15 - E17
E 7	7 - Beading & Glazing	Page E18 - E20
E 8	8 - ETC367 Notching Detail	Page E21
E 9	9 - Pull in Blocks/ Hinge Protectors	Page E22
E 10	10 - Bay Poles Deductions	Page E23 - E25
E 11	11 - Fixing Lug Details	Page E26

IF IN DOUBT ASK!

Typical Corner Detail

To ensure accurate corners, we recommend the use of support blocks (by others) whilst cutting.

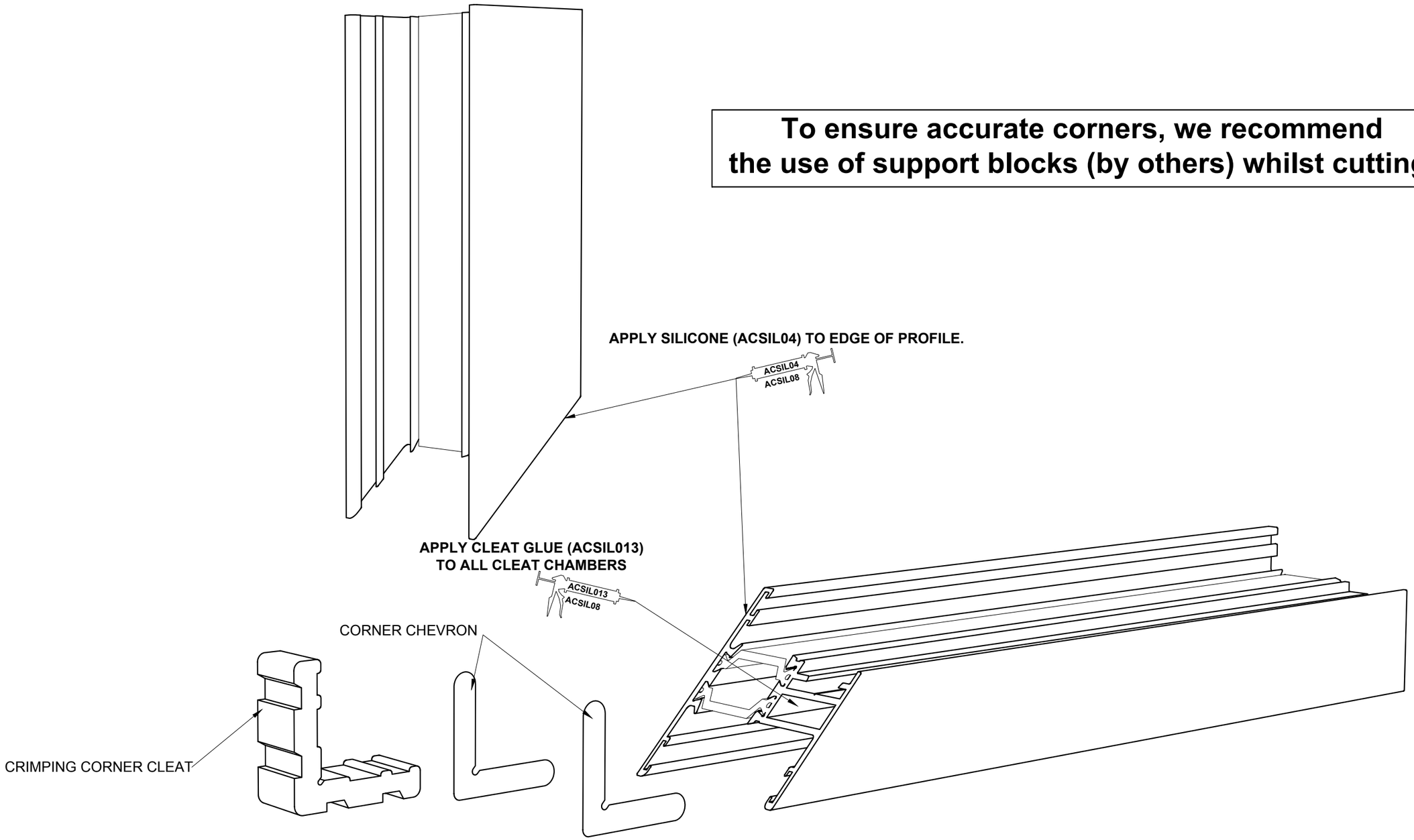

Do Not Scale From This Drawing

Corner Crimping - Externally Glazed Sections

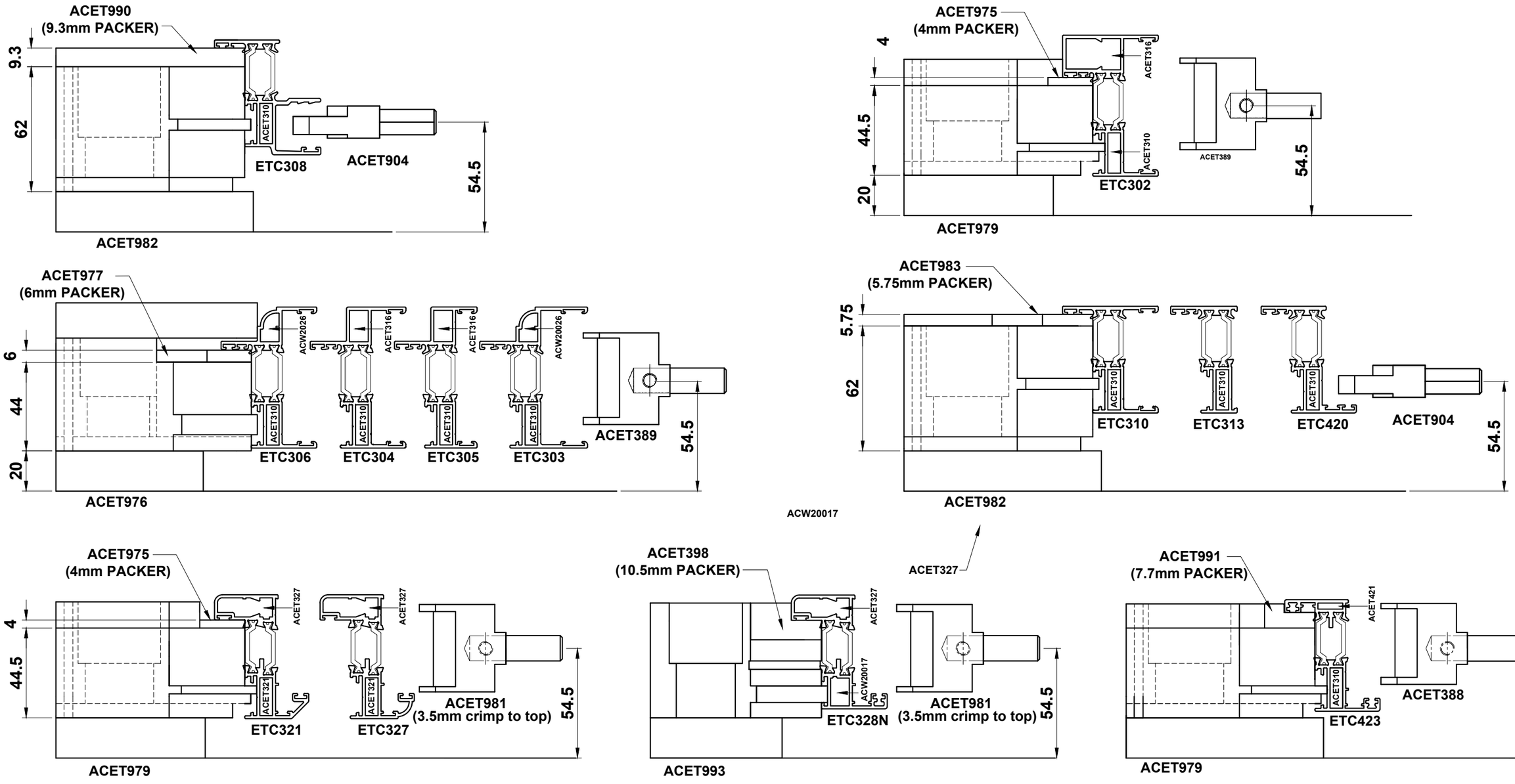

Manual Crimper = WUT024HSZA

Do Not Scale From This Drawing

Corner Crimping - Internally Glazed Sections

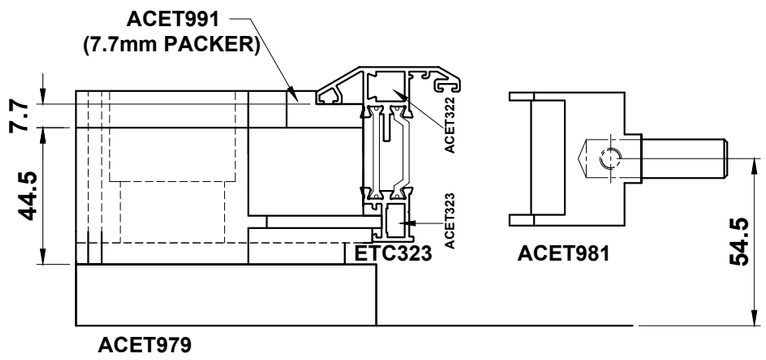

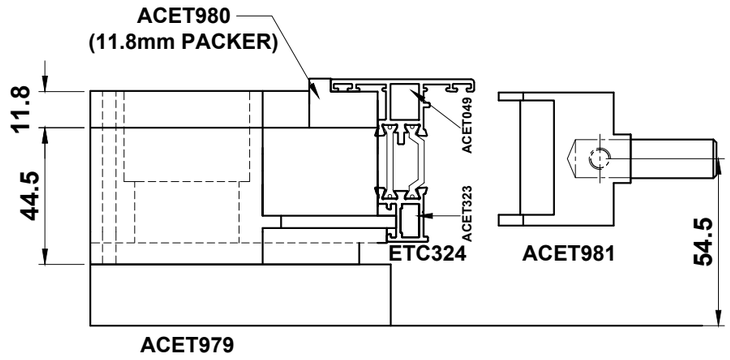

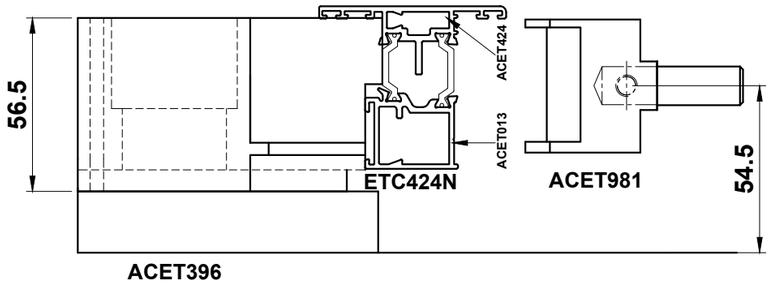

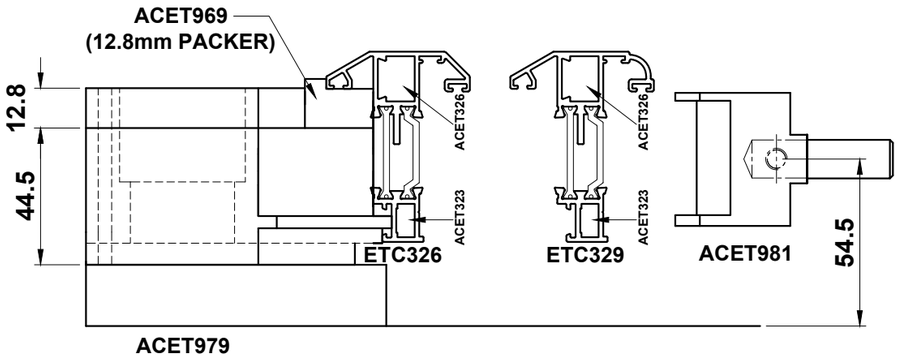

Manual Crimper = WUT024HSZA

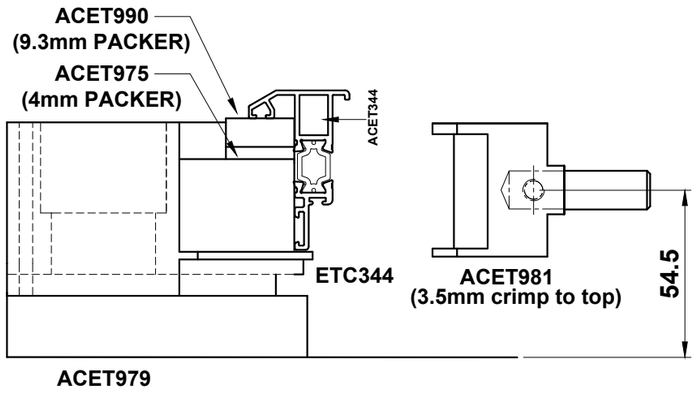

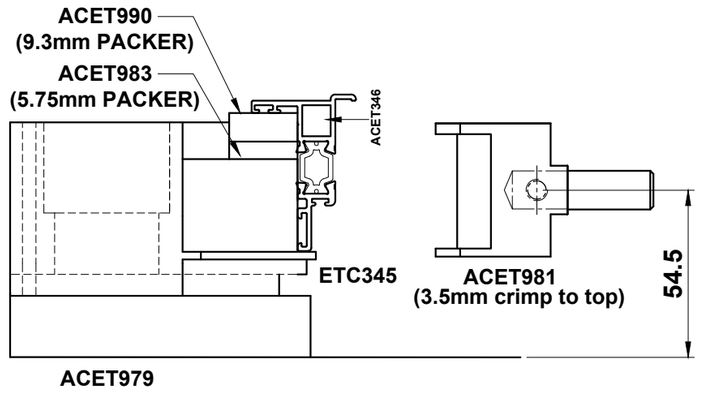

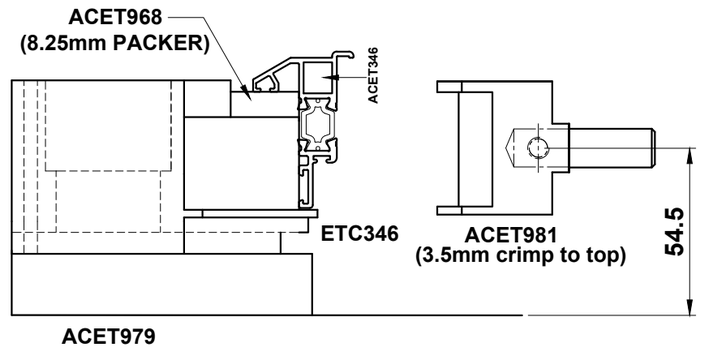

Do Not Scale From This Drawing

Drainage

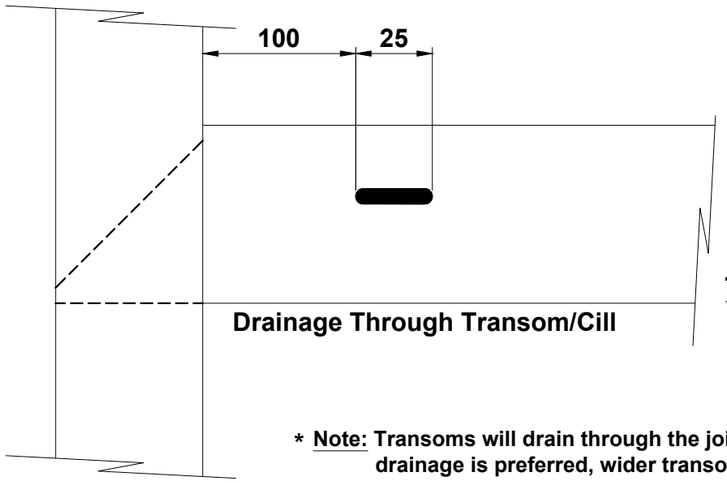

Drainage Through Transom/Cill

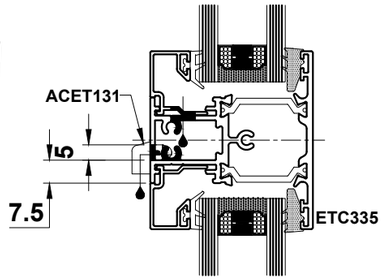

Transom Fixed Light *

* Note: Transoms will drain through the join to the outerframe. If face drainage is preferred, wider transom ETC335 must be used.

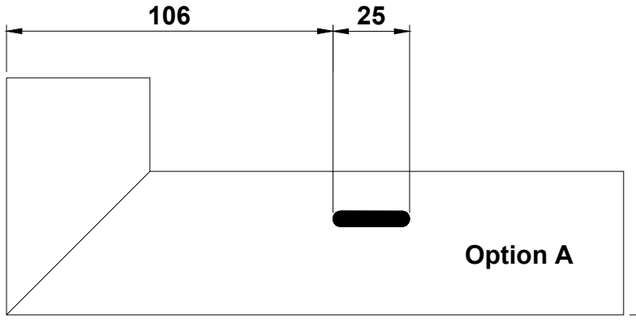

Option A

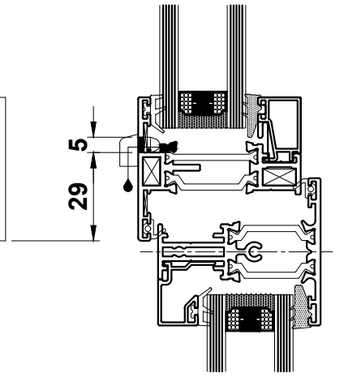

Drainage Through Vent

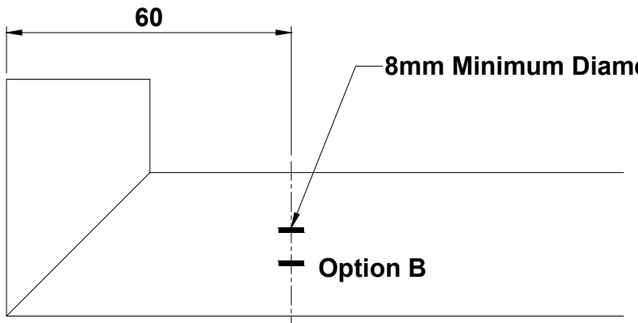

Option B

Drainage Through Vent

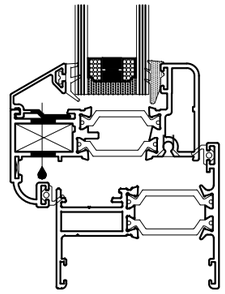

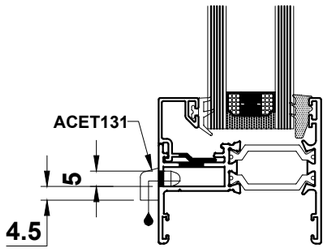

Outerframe Without Cill

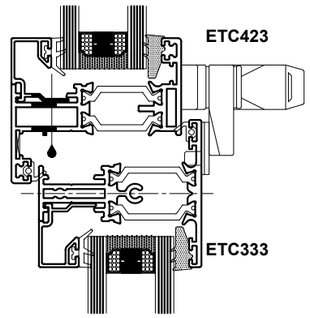

Transom With Vent *

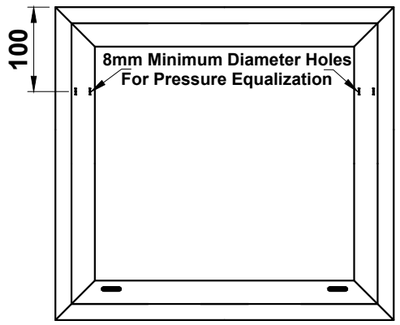

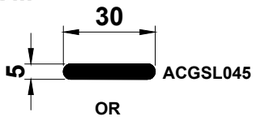

OR

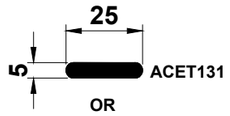

OR

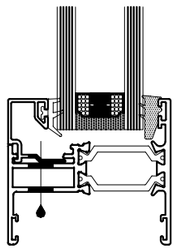

Outerframe With Cill

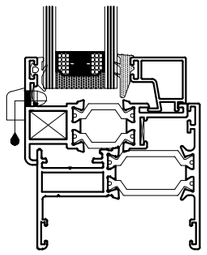

Outerframe With Reverse Adaptor

Important Note: All exposed aluminium should be coated using ACSIL014 or painted to match the frame.

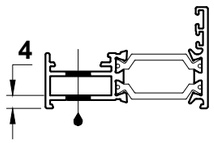

ETC313 should only be used with a cill to allow a drainage path.

Do Not Scale From This Drawing

Sub Cill Drainage

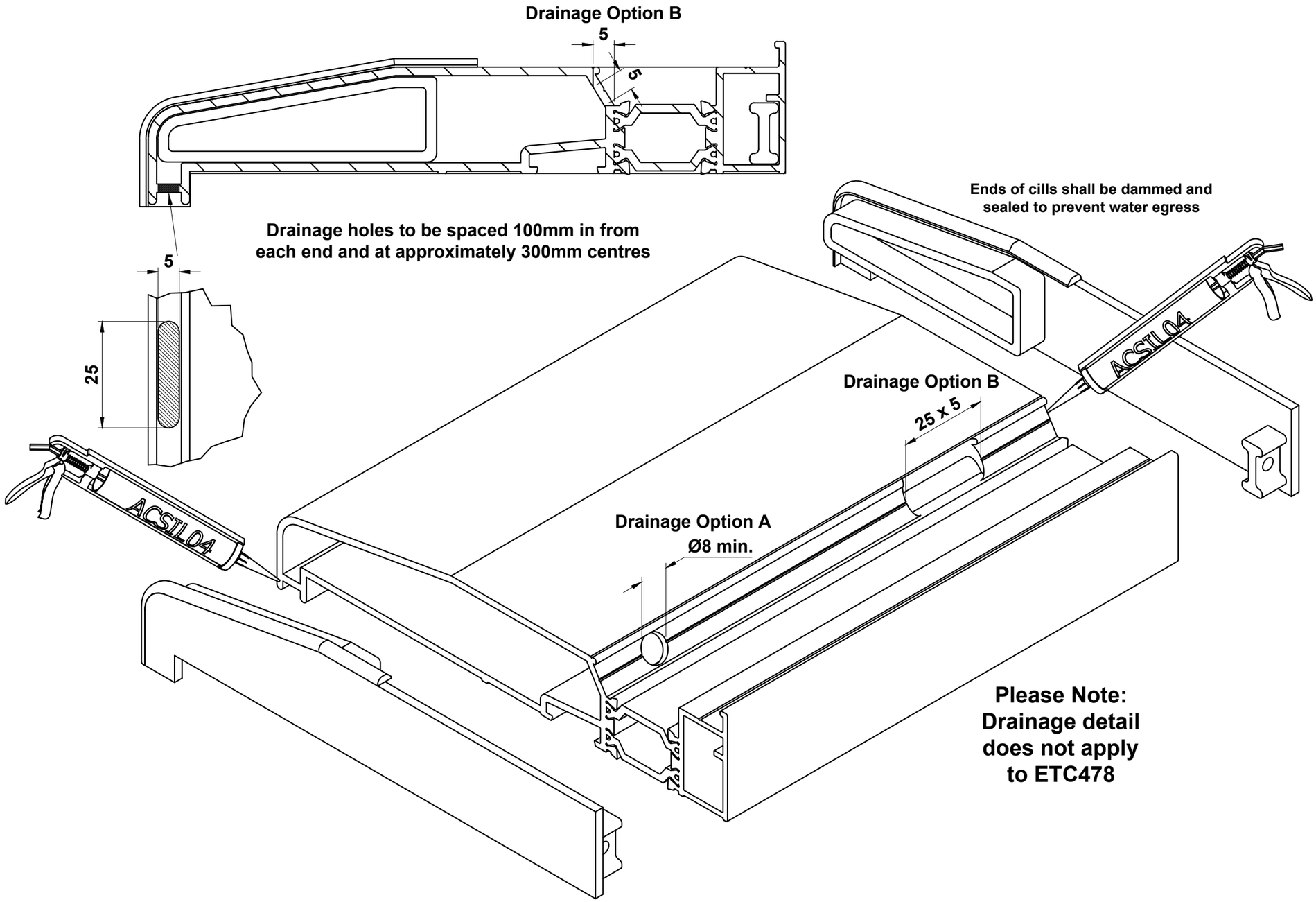

Do Not Scale From This Drawing

Angled Sub Cill

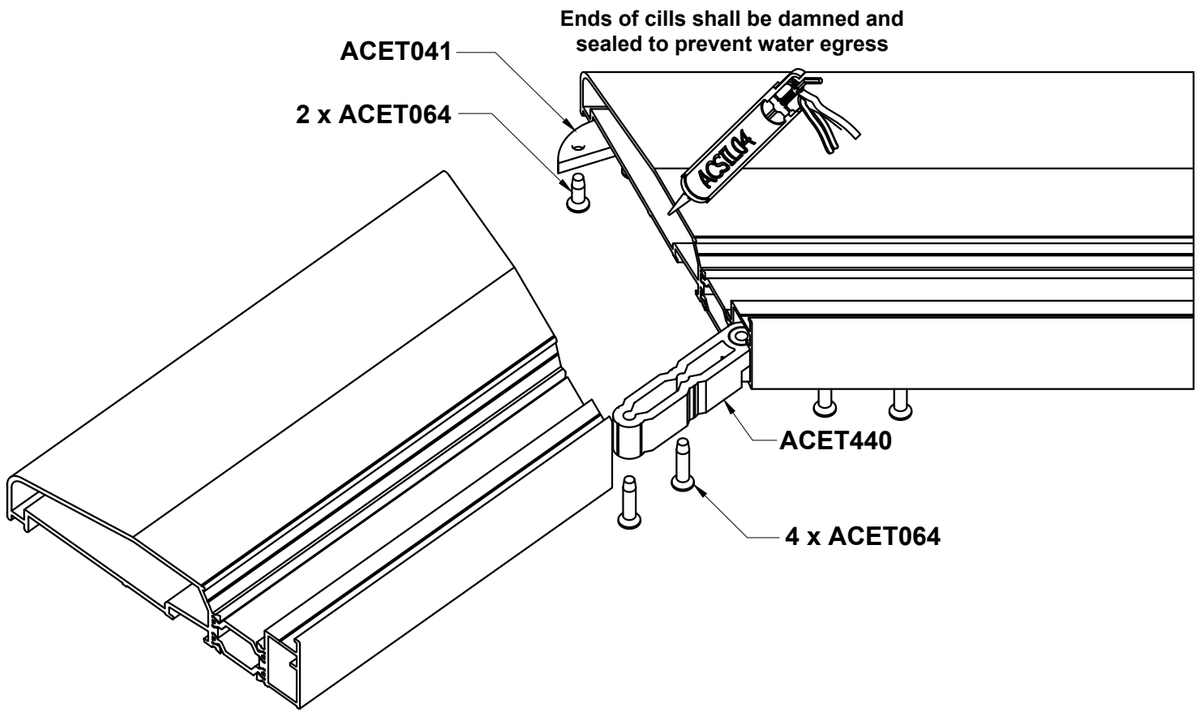

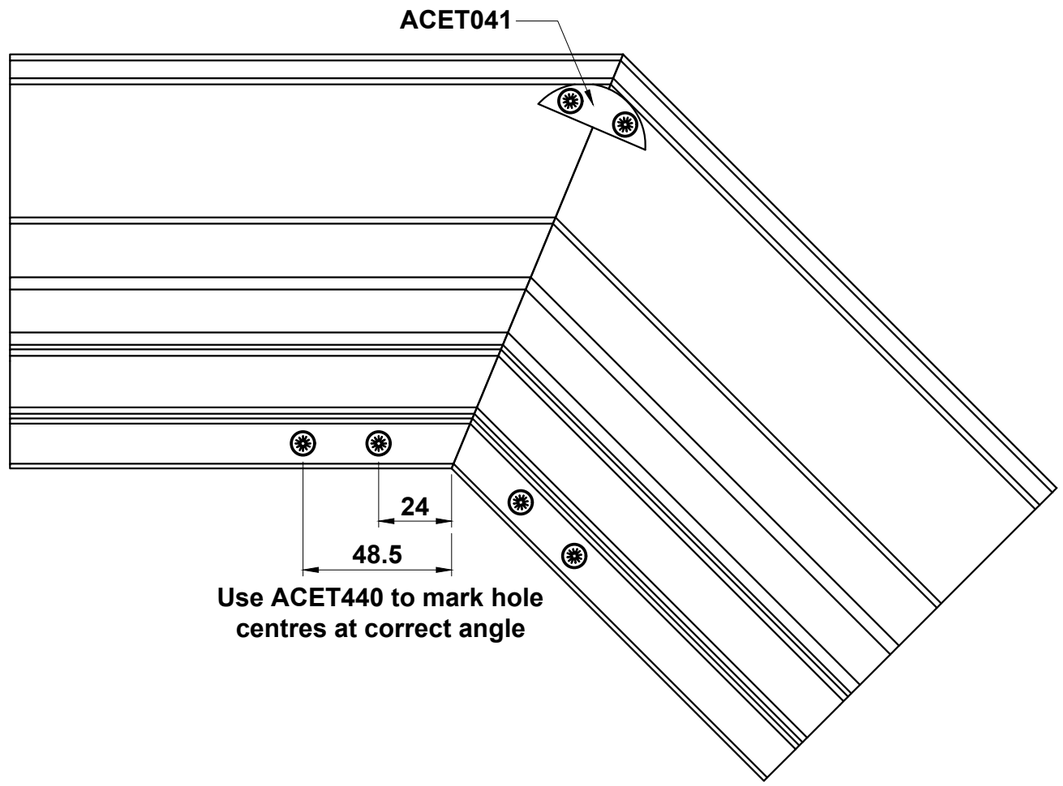

Do Not Scale From This Drawing

Alitherm 300

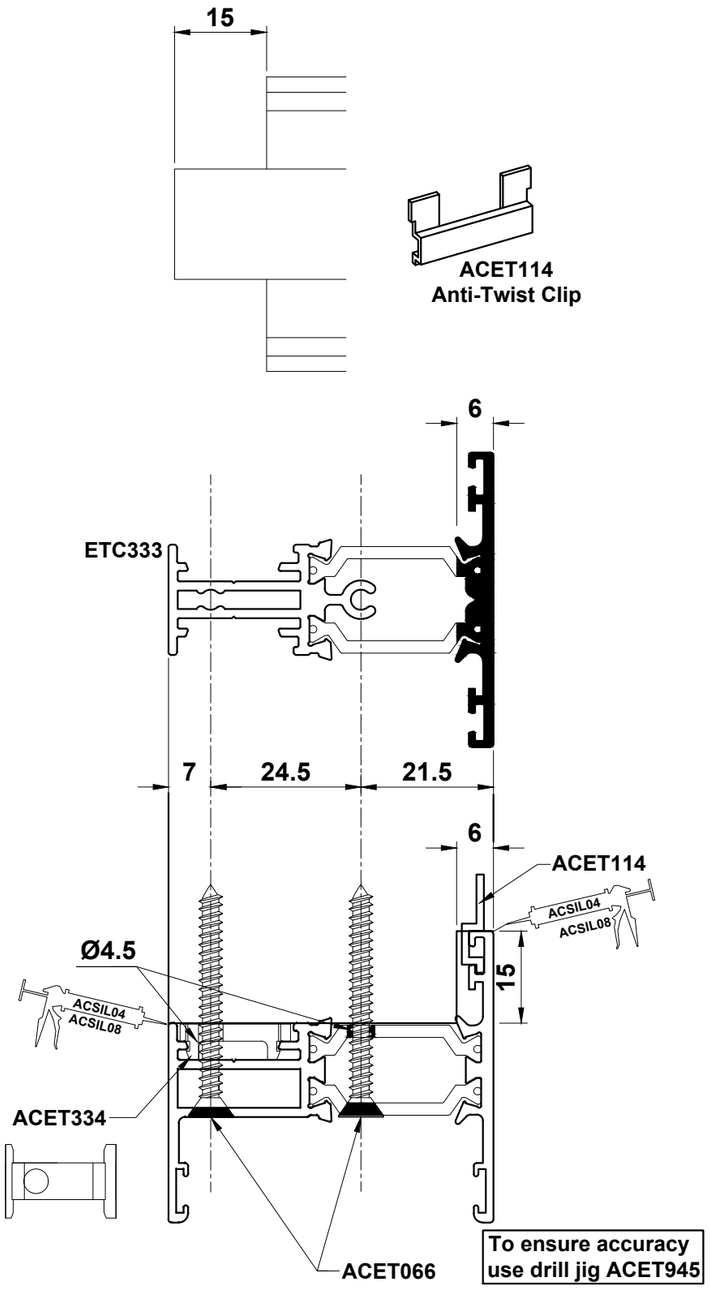

To ensure accuracy use drill jig ACET945

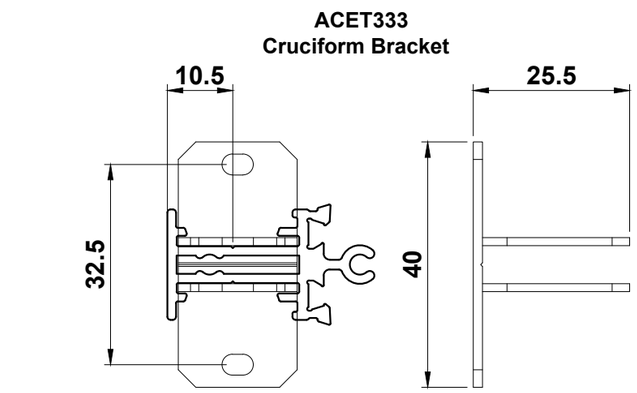

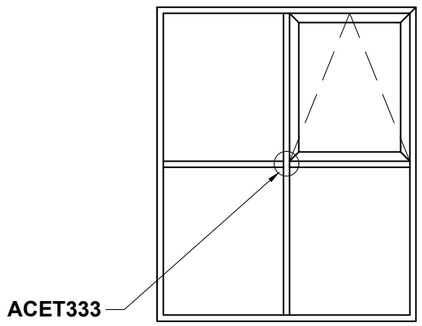

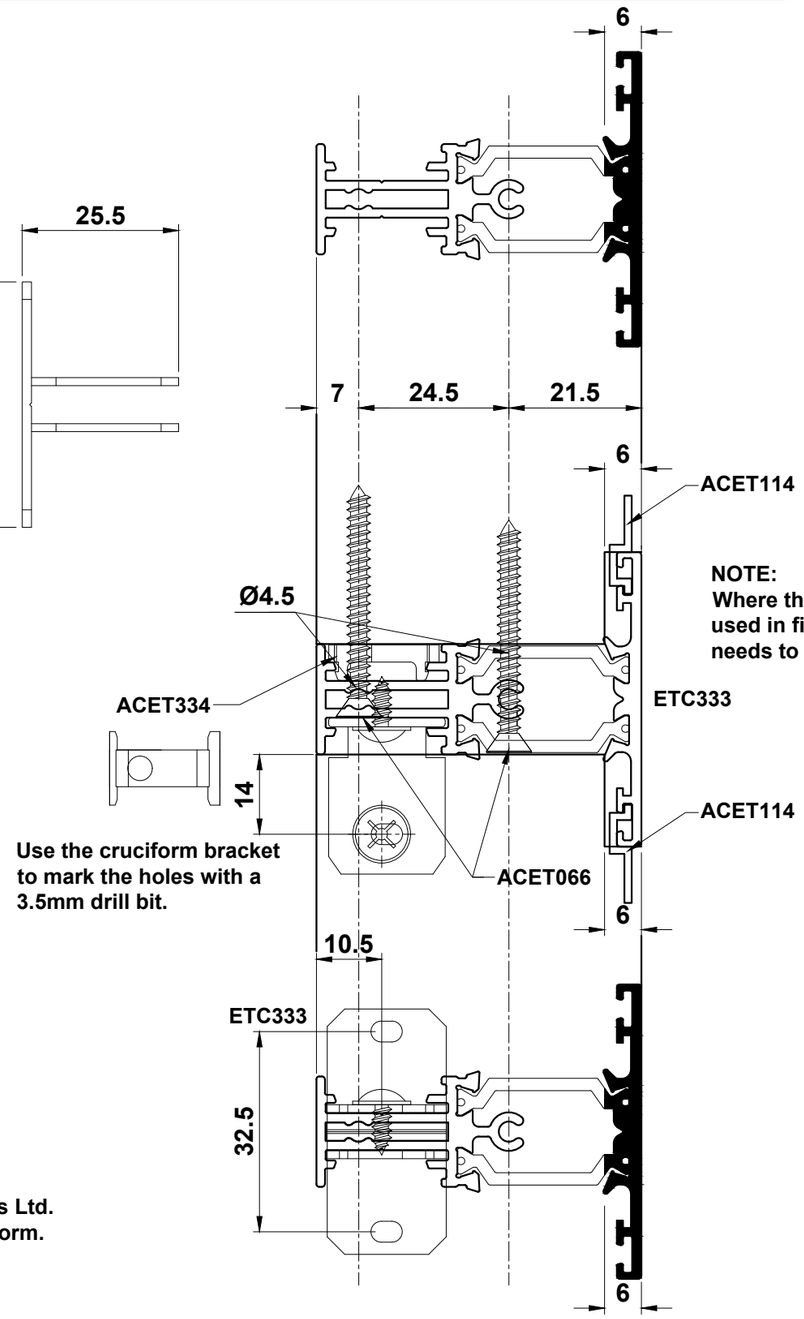

NOTE:
Where the cruciform is used in fixed lights, the bead needs to be notched.

Use the cruciform bracket to mark the holes with a 3.5mm drill bit.

Note:
End mill cutters can be ordered through Smart Systems Ltd.
Please contact the Technical Department for an order form.
Standard delivery is 2-3 weeks approx.

Do Not Scale From This Drawing

Transom/Mullion Preparation

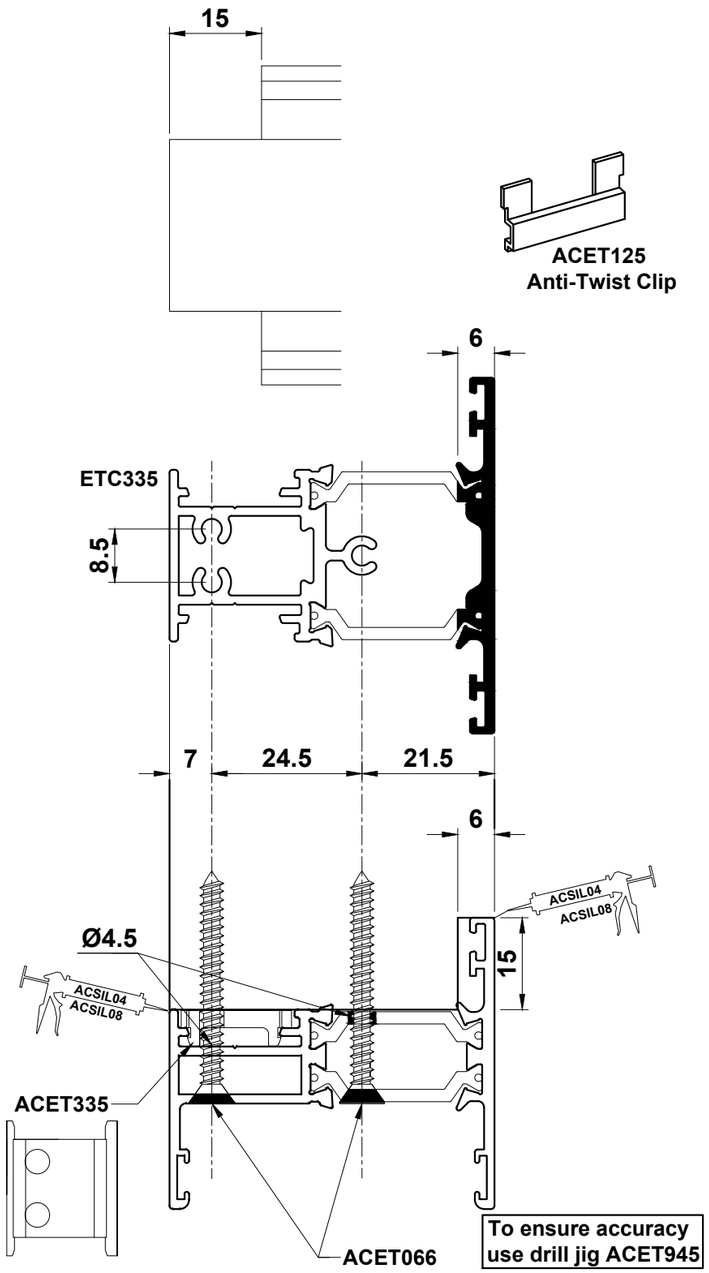

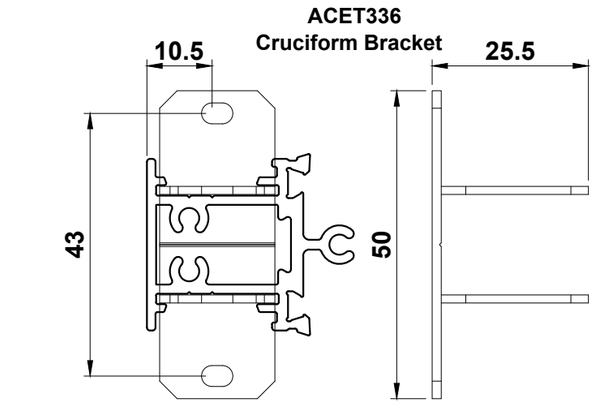

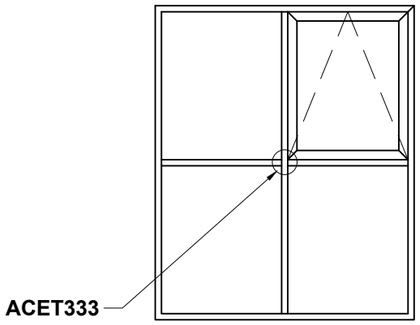

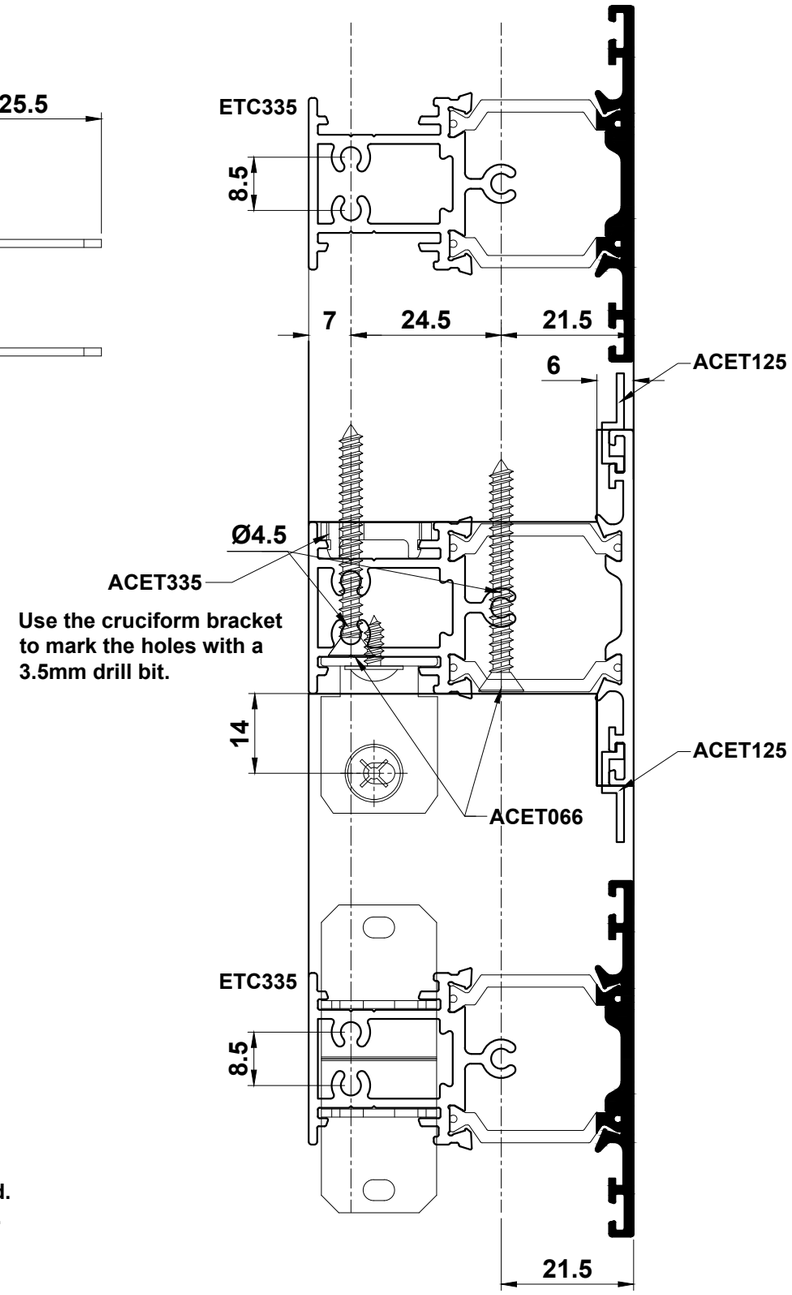

Note:
End mill cutters can be ordered through Smart Systems Ltd.
Please contact the Technical Department for an order form.
Standard delivery is 2-3 weeks approx.

Do Not Scale From This Drawing

Transom/Mullion Preparation

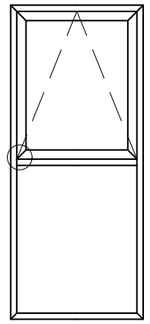

Note:
End mill cutters can be ordered through Smart Systems Ltd.
Please contact the Technical Department for an order form.
Standard delivery is 2-3 weeks approx.

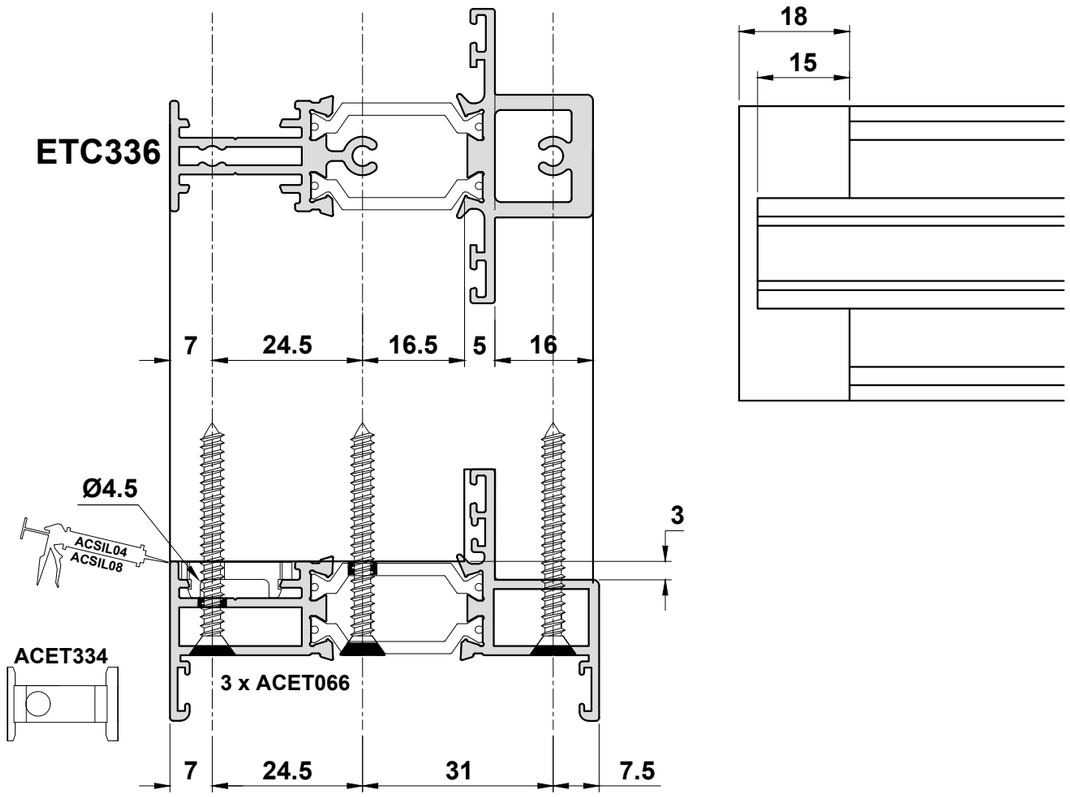

Do Not Scale From This Drawing

Top Hung & Side Hung Friction Hinge Details

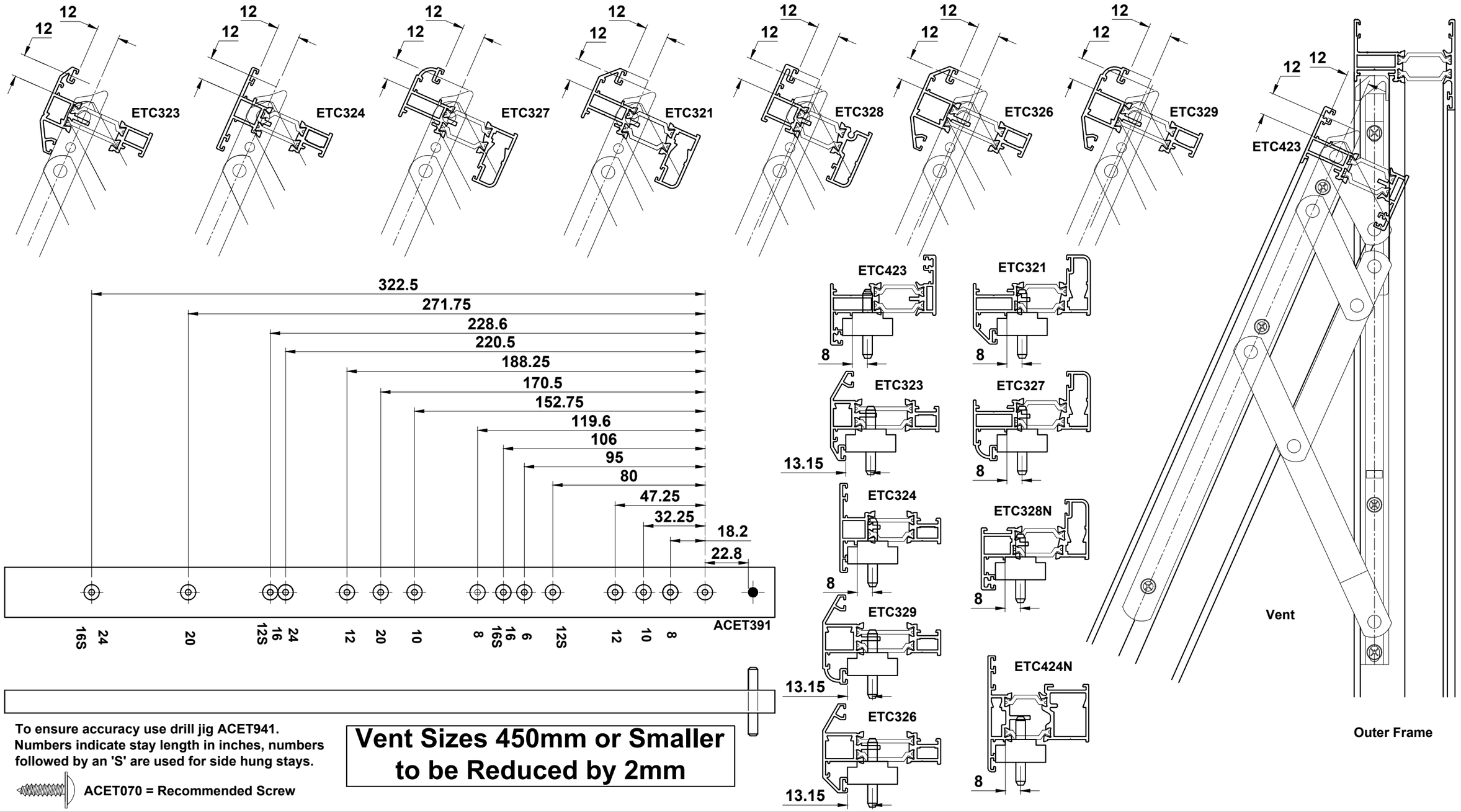

To ensure accuracy use drill jig ACET941.
Numbers indicate stay length in inches, numbers followed by an 'S' are used for side hung stays.

ACET070 = Recommended Screw

Vent Sizes 450mm or Smaller to be Reduced by 2mm

Do Not Scale From This Drawing

ISSUED : MAY 2017

Egress Hinge Details

Alitherm 300

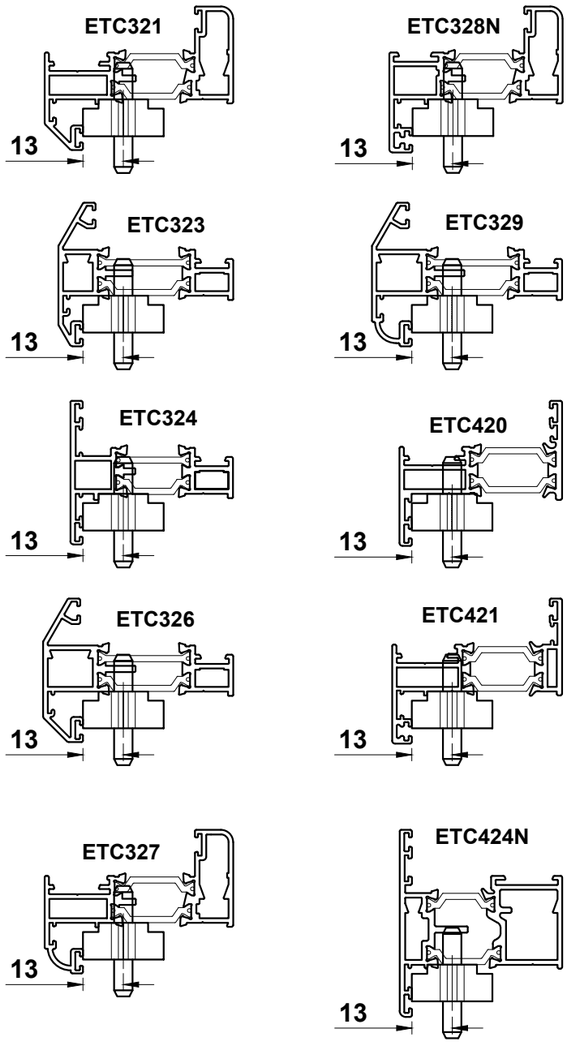

Vent Sizes 450mm or Smaller to be Reduced by 2mm

Jig = ACETME93

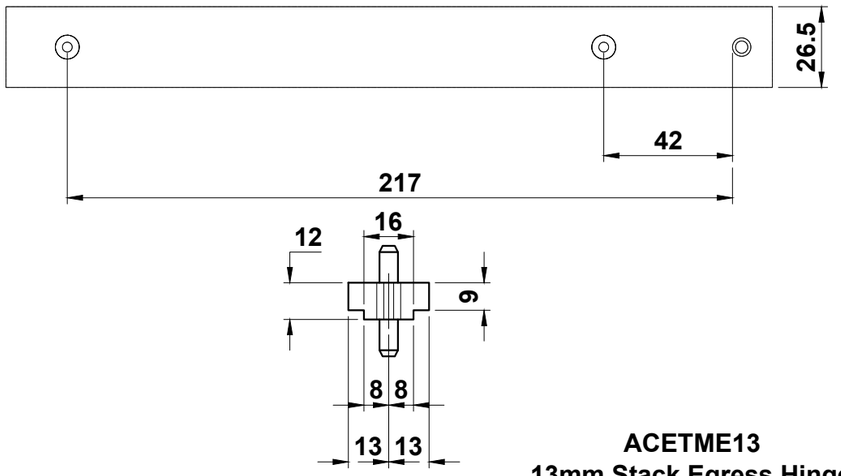

The benefits of these hinges are:

- True 90° opening angle
- Achieves minimum fire escape requirement on smaller windows
- Can be moved into easy clean position, with automatic reset on closing
- Superior carrying weight (40kg max)
- The 345mm length replaces the current 305mm & 406mm hinges
- Tested to BS EN1670 and exceeded Grade 5 for ultimate corrosion resistance
- Tested to EN1191 over 25,000 cycles under 40kg.

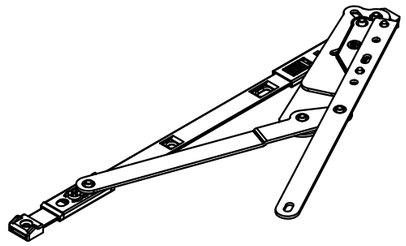

ACETME13
13mm Stack Egress Hinge

Side Hung	Type of Hinge / Stay	Max. Vent	Width		Typical
		Weight (kgs)	Minimum	Maximum	Height
ACETME13	Egress	40	400	900	-

Do Not Scale From This Drawing

Egress Hinge Details

Example Opening Detail

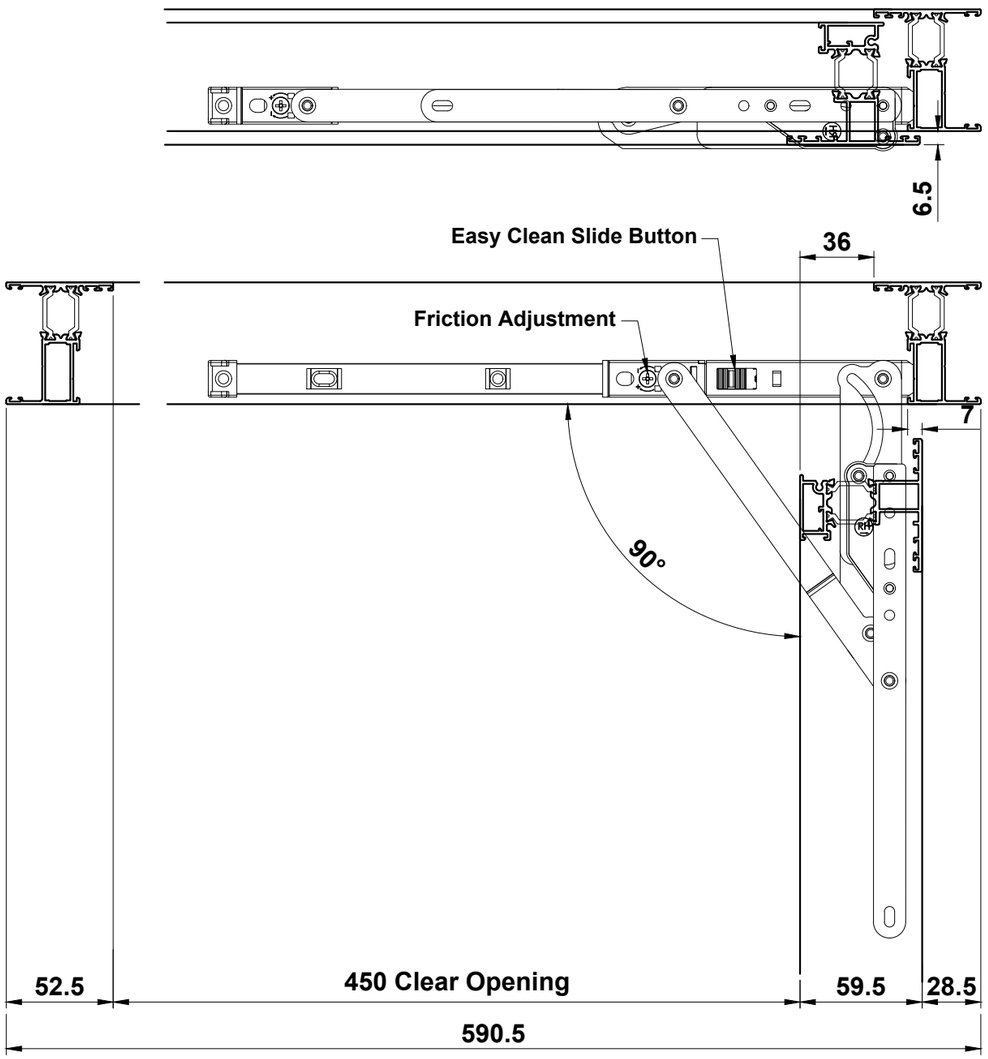

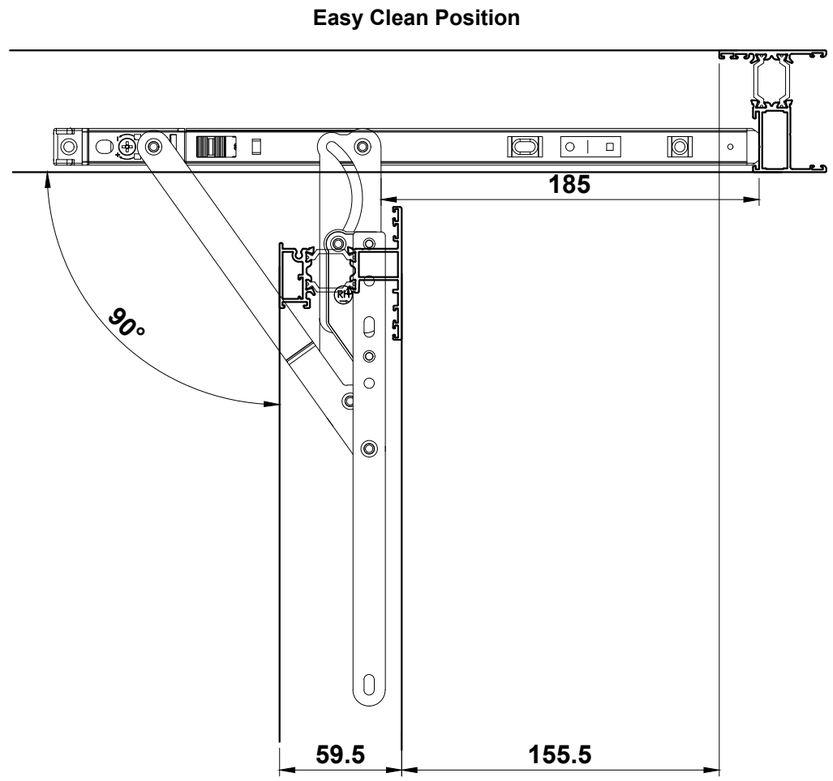

For further information regarding clear openings, please see the Smart Systems' White Paper Document B

Do Not Scale From This Drawing

Multi-point Locking Preparation

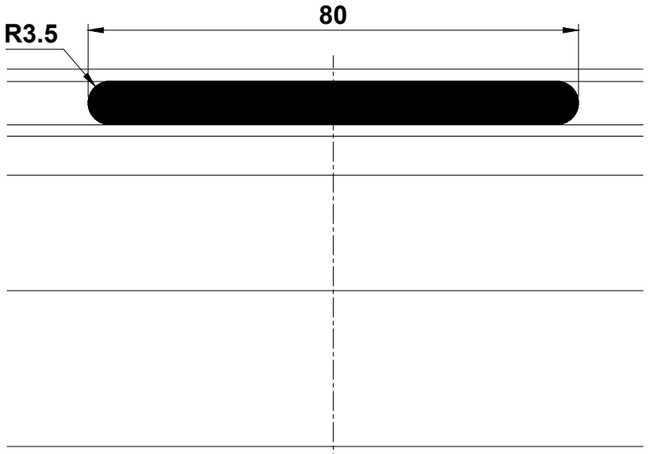

View on Arrow A

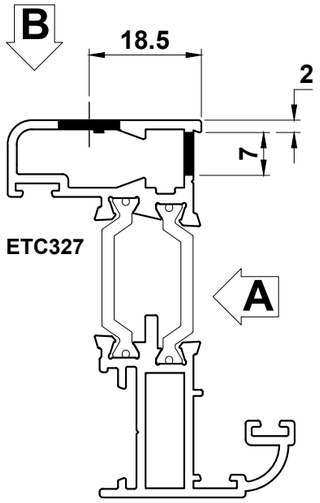

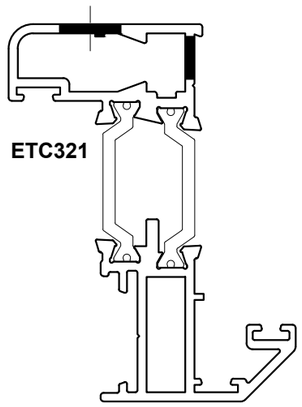

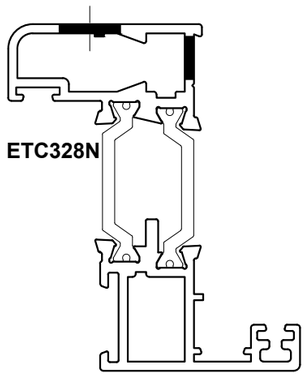

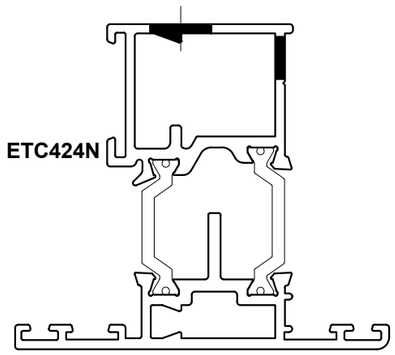

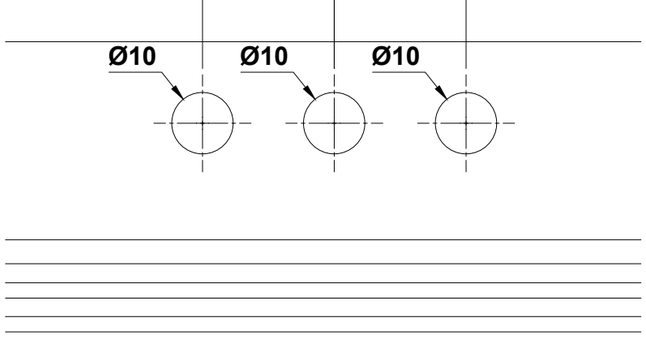

View on Arrow B

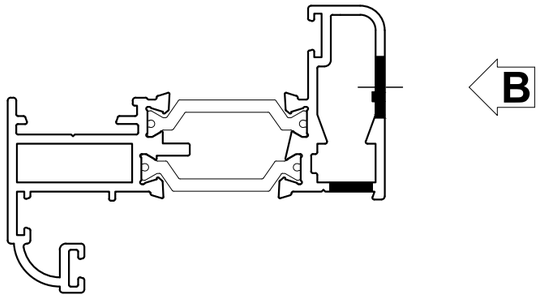

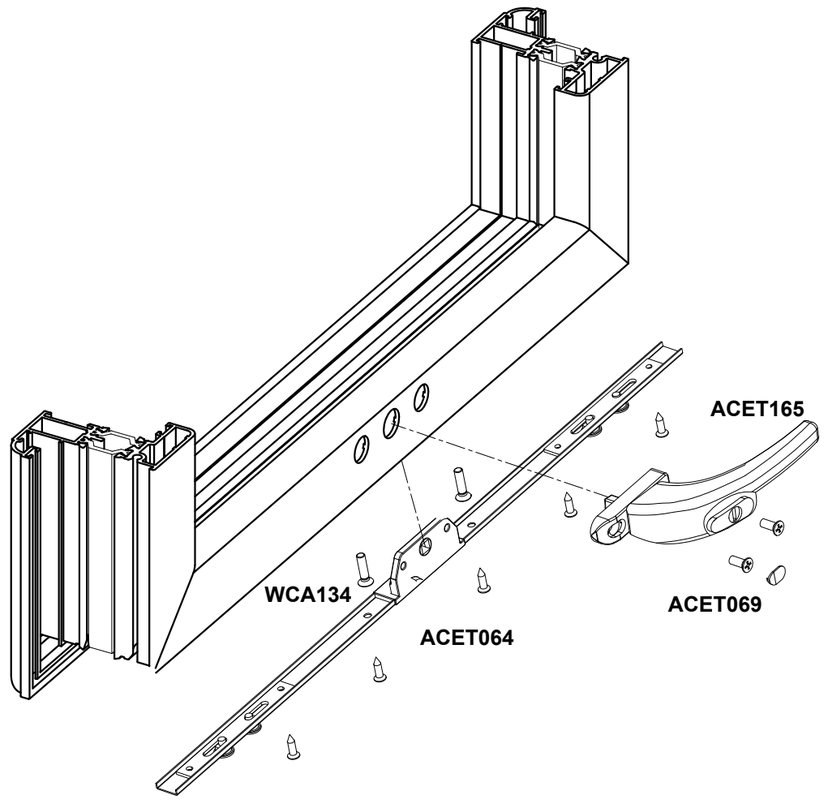

Do Not Scale From This Drawing

Multi-point Locking Preparation

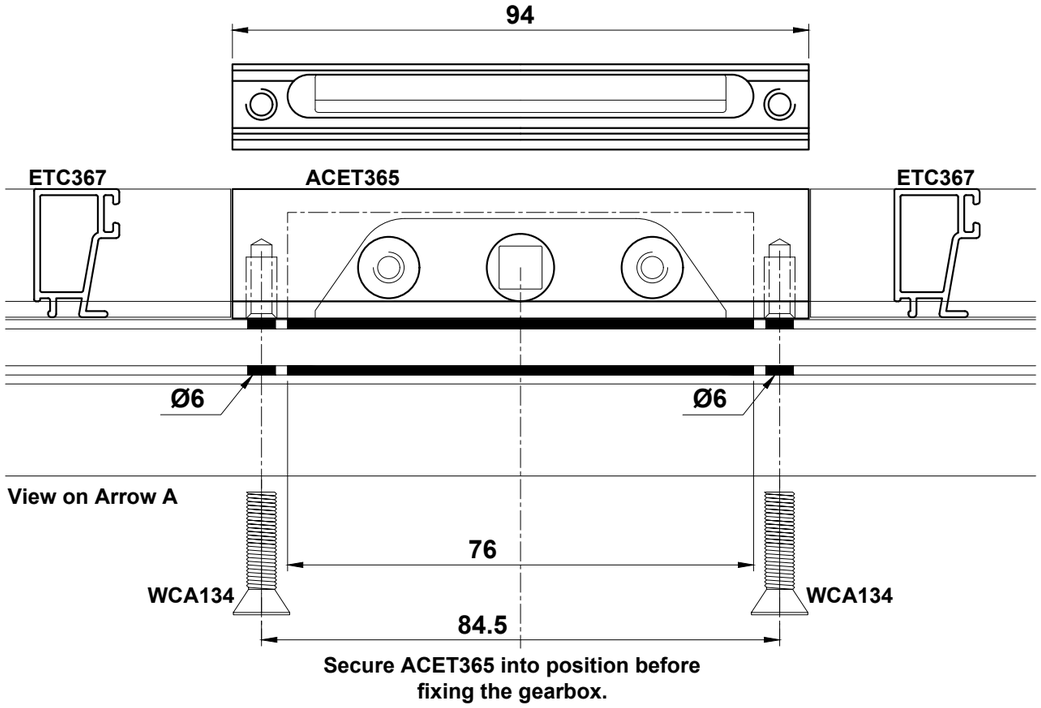

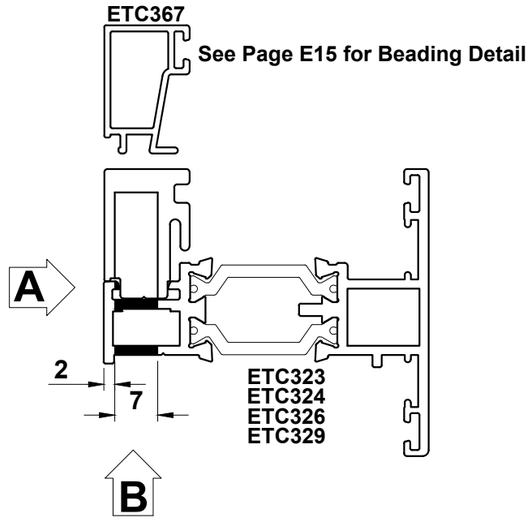

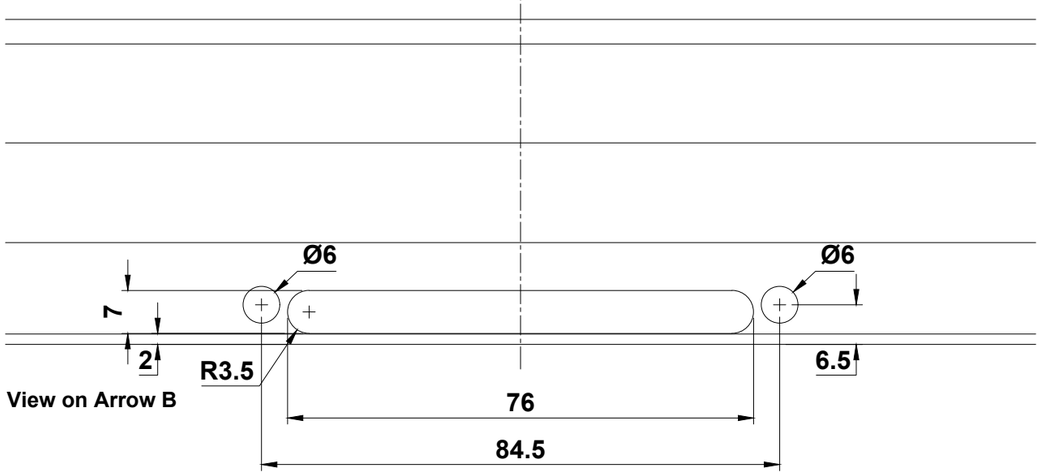

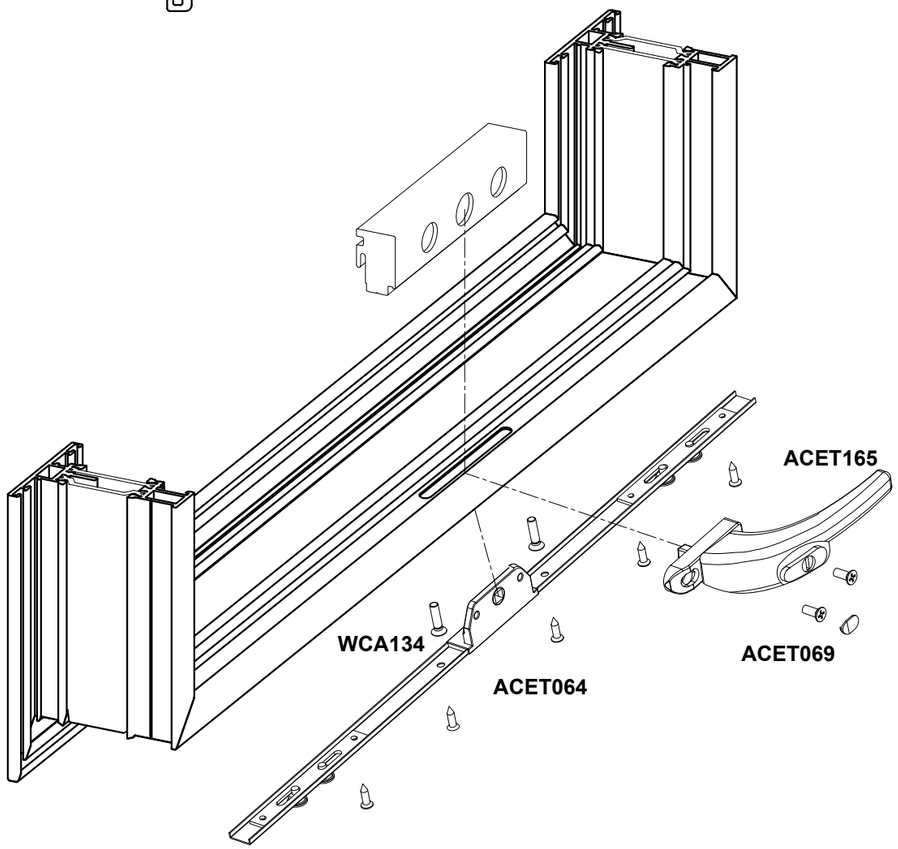

Do Not Scale From This Drawing

Cockspur Handle Preparation

Vents Over 750mm Require 2 Cockspur Handles

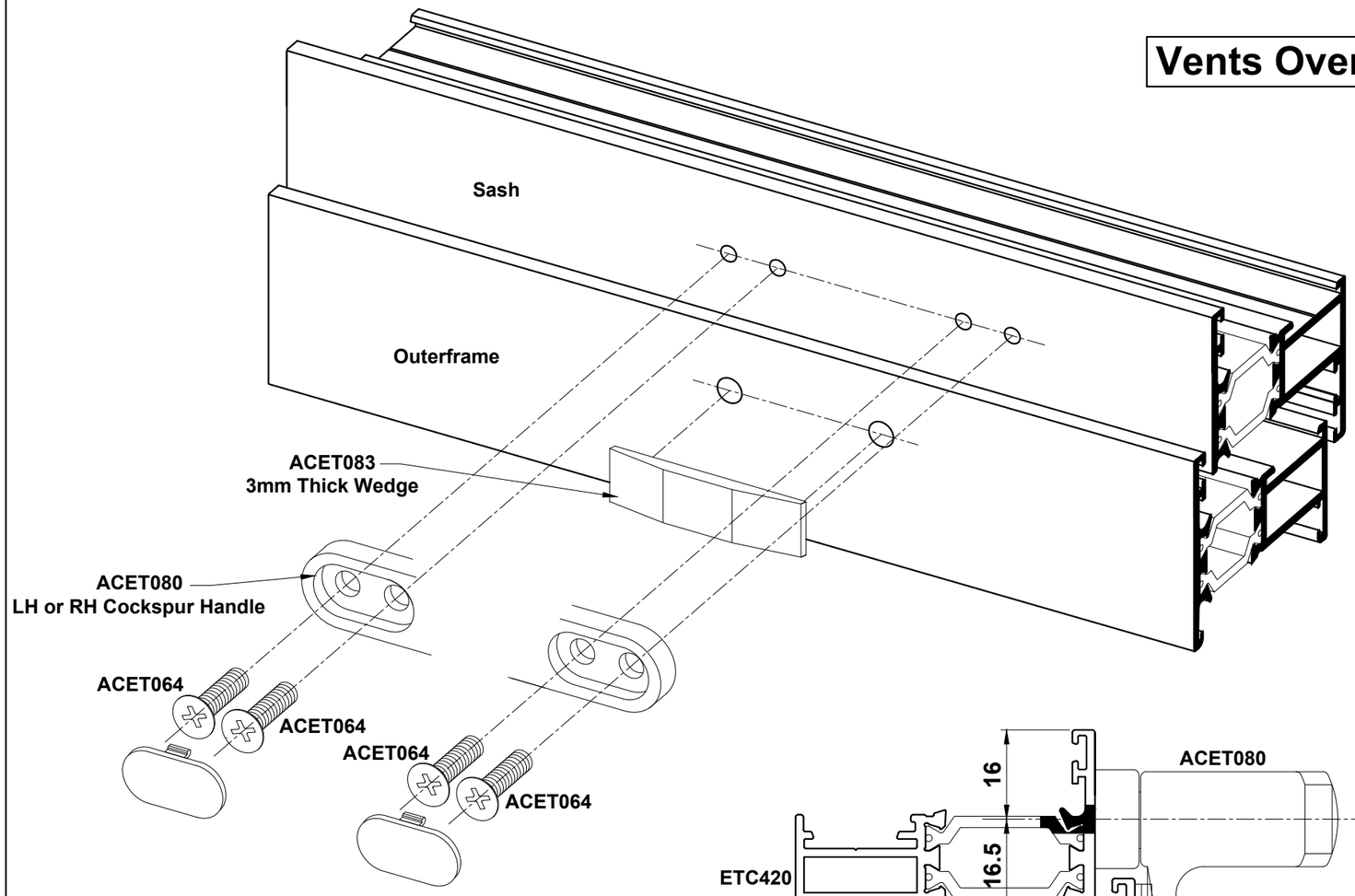

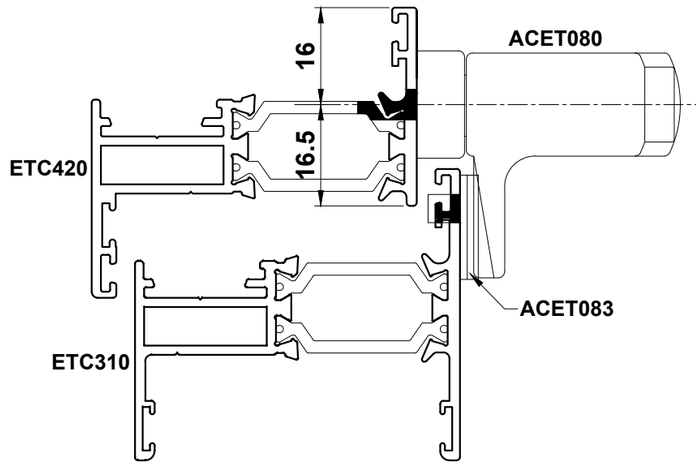

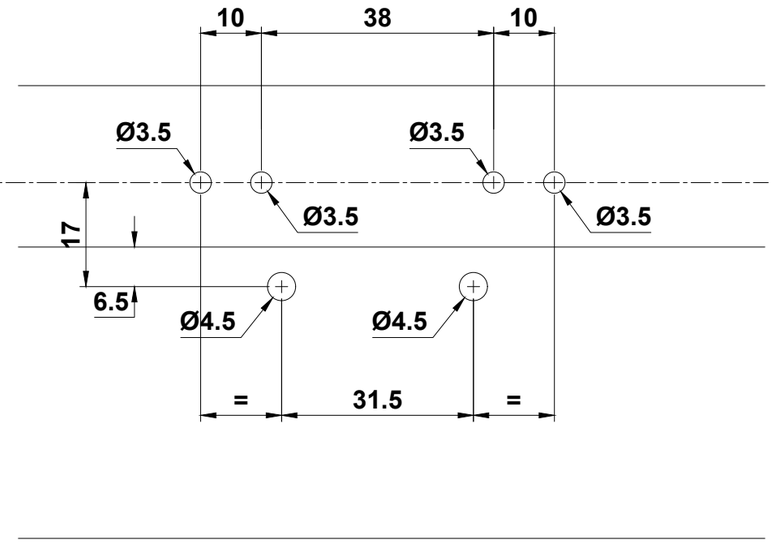

Do Not Scale From This Drawing

Glazing Details

24mm Glazing
Externally Glazed

Sections

ETC302
ETC303
ETC304
ETC305
ETC306
ETC308
ETC310
ETC420
ETC313

ETC321
ETC327
ETC423
ETC343

ETC333
ETC335
ETC336

ETC370 or ETC364

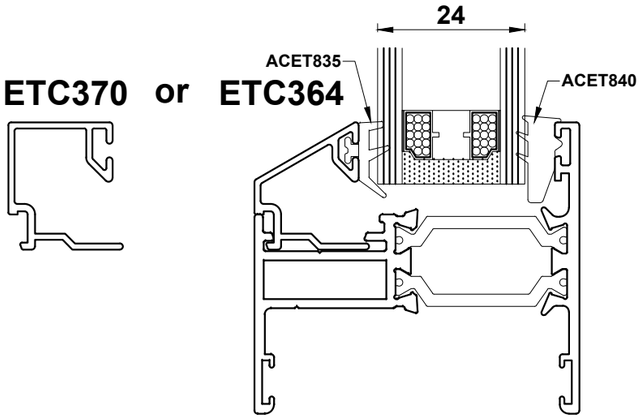

ETC378

ETC381

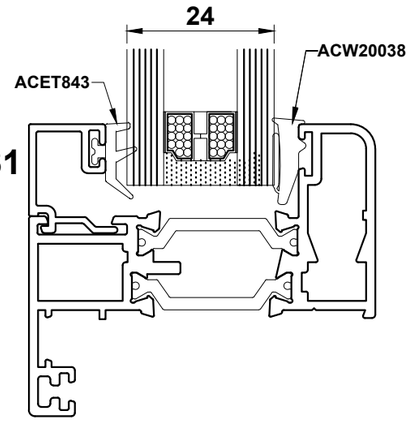

Sections
ETC328N

24mm Glazing
Internally Glazed

Sections
ETC323

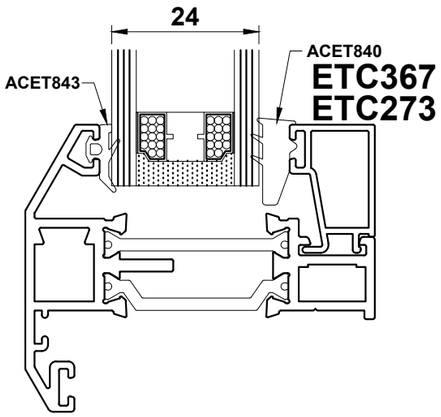

Sections
ETC346

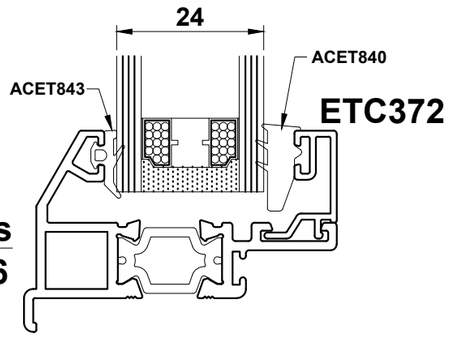

Sections
ETC424N
ETD330

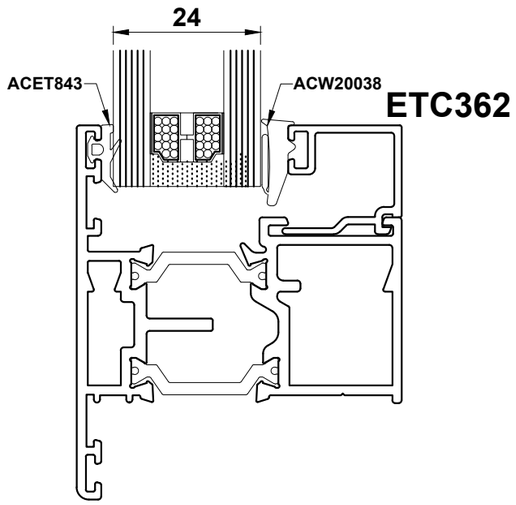

Do Not Scale From This Drawing

Glazing Details

28mm Glazing
Externally Glazed

Sections

ETC303
ETC304
ETC305
ETC306
ETC308
ETC310
ETC420
ETC313

ETC321
ETC327
ETC423
ETC343

ETC333
ETC335
ETC336

ETC375 or ETC371

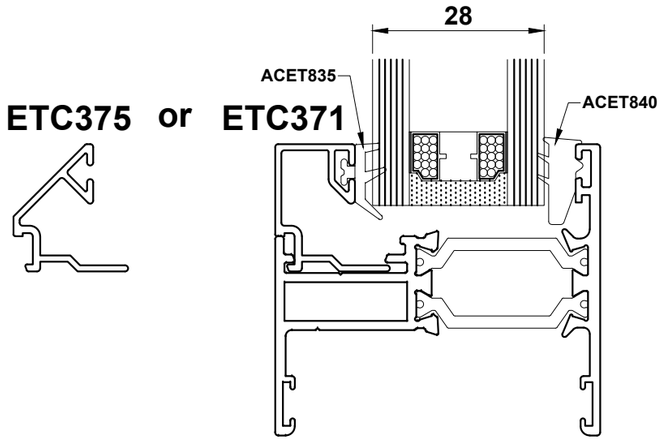

ETC366

Sections
ETC328N

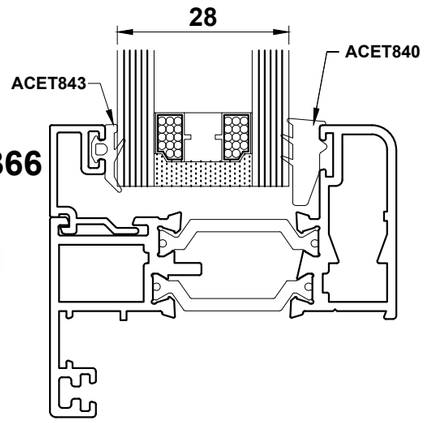

28mm Glazing
Internally Glazed

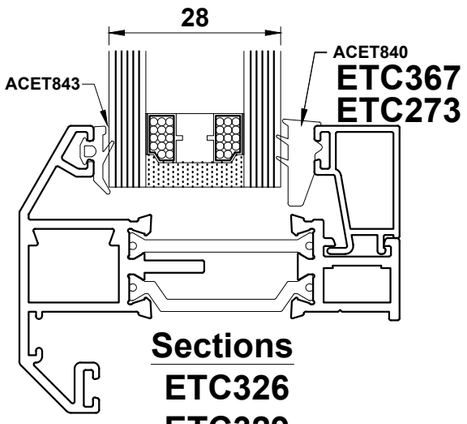

Sections
ETC326
ETC329

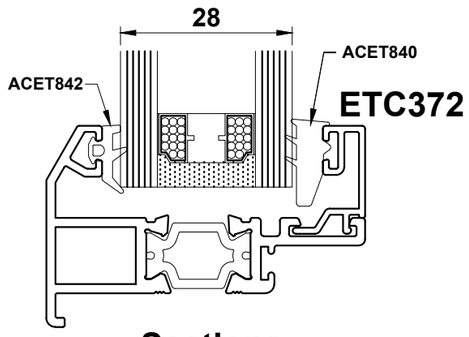

Sections
ETC344

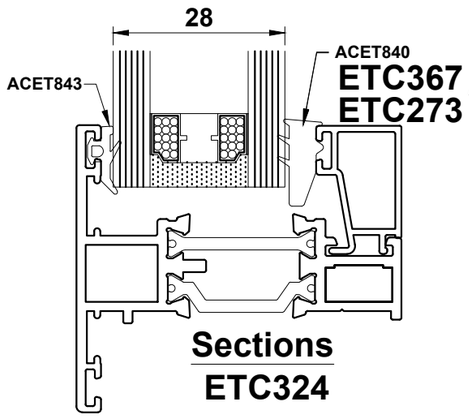

Sections
ETC324

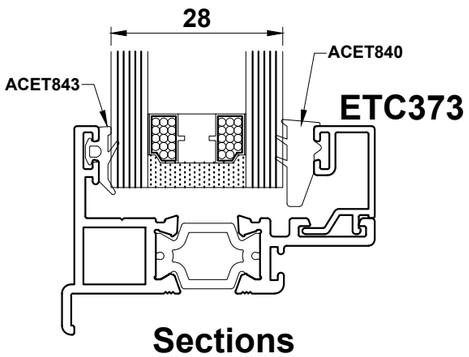

Sections
ETC345

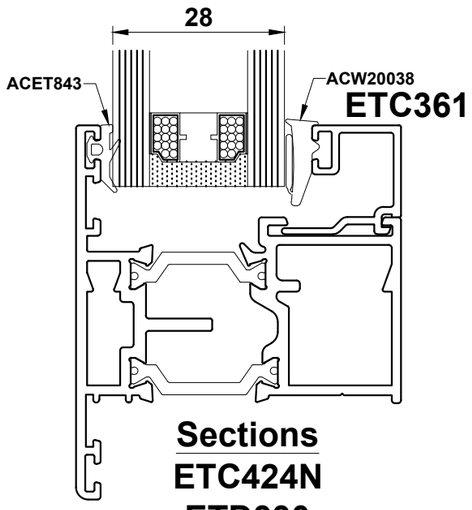

Sections
ETC424N
ETD330

Do Not Scale From This Drawing

Glazing Details

32mm Glazing Externally Glazed

Sections

ETC302
ETC303
ETC304
ETC305
ETC306
ETC308
ETC310
ETC420
ETC313

ETC321
ETC327
ETC423
ETC343

ETC333
ETC335
ETC336

ETC379

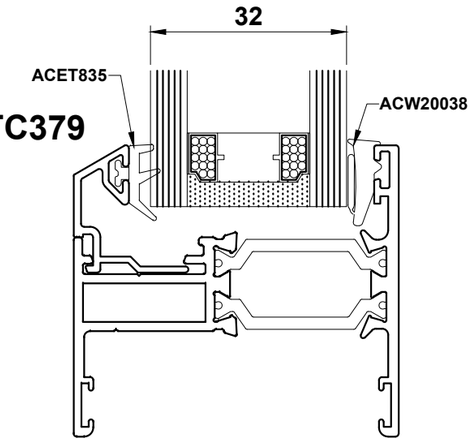

36mm Glazing Externally Glazed

Sections

ETC302
ETC303
ETC304
ETC305
ETC306
ETC308
ETC310
ETC313
ETC420

ETC321
ETC327
ETC423
ETC343

ETC333
ETC335
ETC336

ETC376

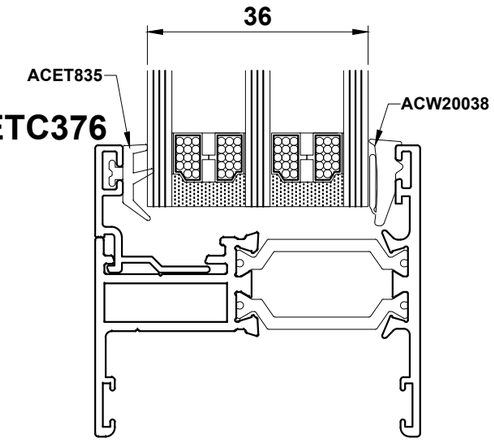

32mm Glazing Internally Glazed

Sections

ETC424N
ETD330

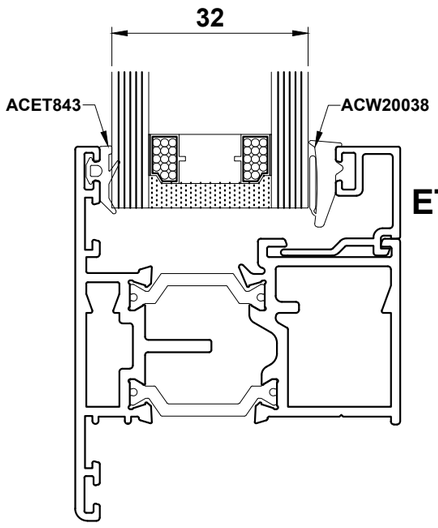

ETC360

36mm Glazing Internally Glazed

Sections

ETC424N
ETD330

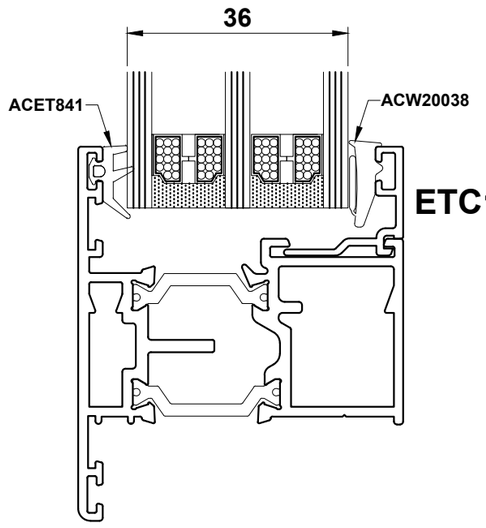

ETC160

Do Not Scale From This Drawing

ETC367 Notch Detail

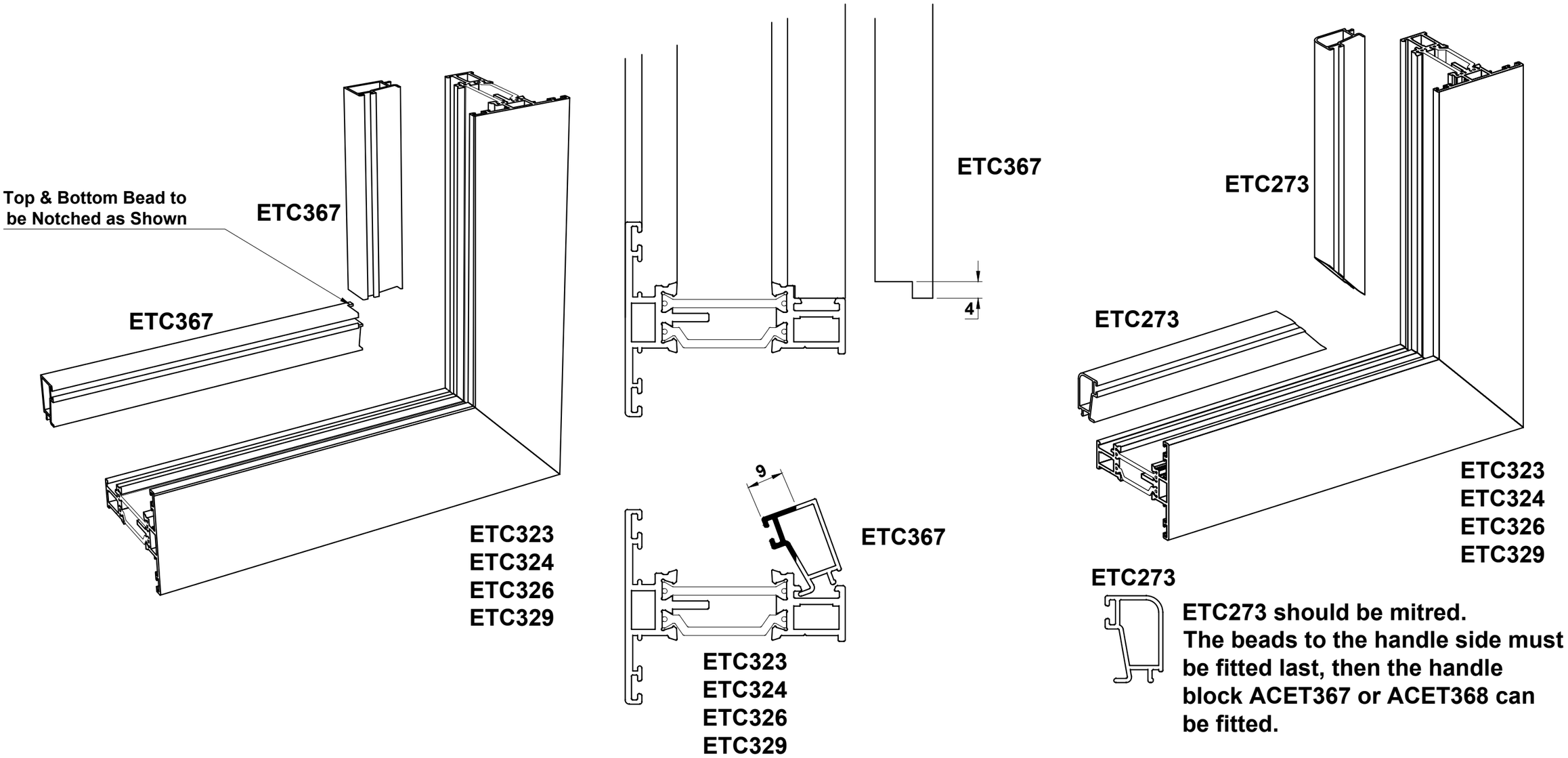

Do Not Scale From This Drawing

Pull in Blocks/ Hinge Protectors

Pull In Blocks for Easy Clean/Egress Stays

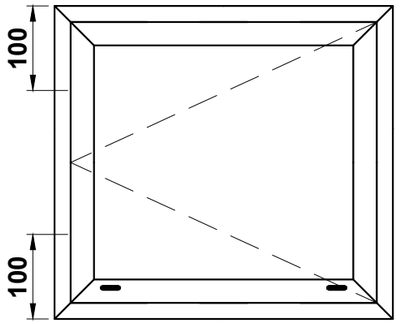

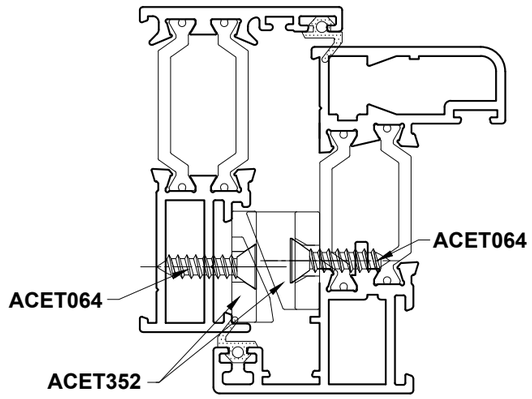

Please Note:

- 2 pairs per opening vent to be fitted to hinged side of window
- Each pair must be fitted with the wedge centre within 100mm of each hinge and in the centre of the window when sash height is greater than 800mm.

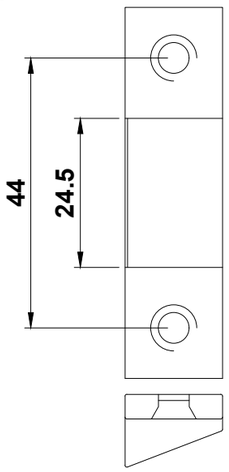

Sash Wedge

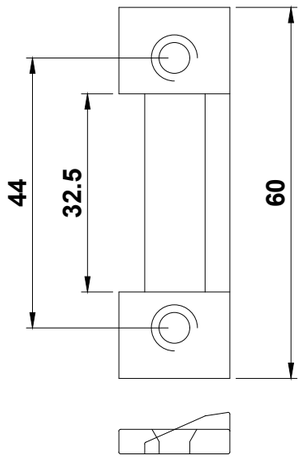

Outer Frame Wedge

Security Hinge Protectors

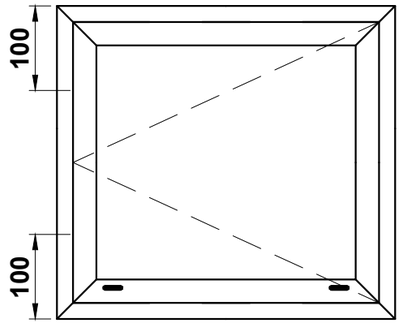

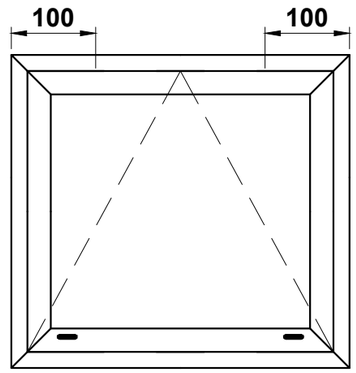

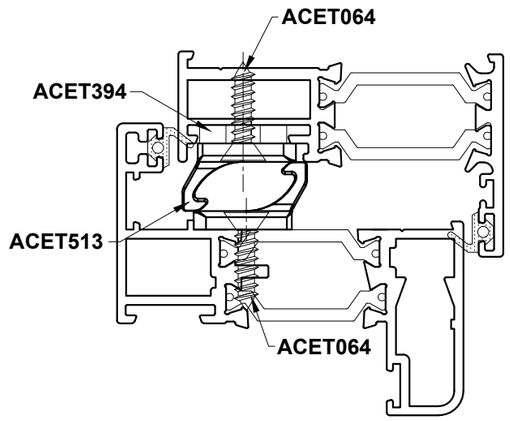

Please Note:

- 2 pairs per opening vent to be fitted to hinged side of window
- Each pair must be fitted with the hook centre within 100mm of each hinge

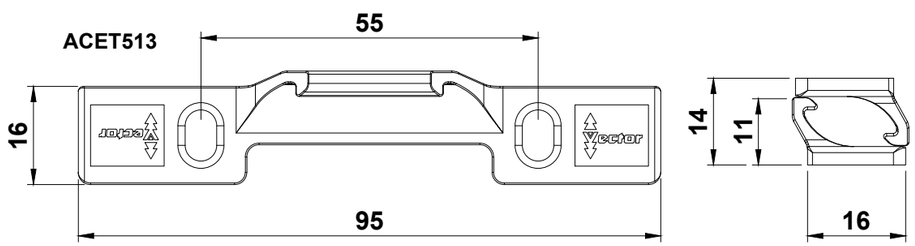

Do Not Scale From This Drawing

Bay Pole Angles / Deductions

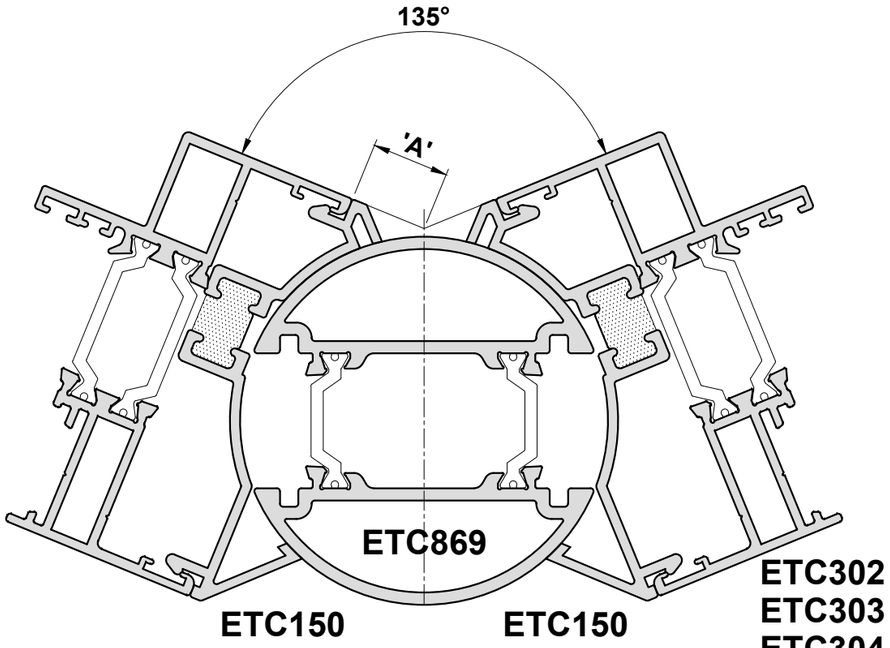

ETC150 is NOT available in dual colour

ANGLE	DEDUCTION 'A'
180°	24.5
175°	23.5
170°	22
165°	20.5
160°	19
155°	18
150°	16.5
145°	15
140°	13.5
135°	12

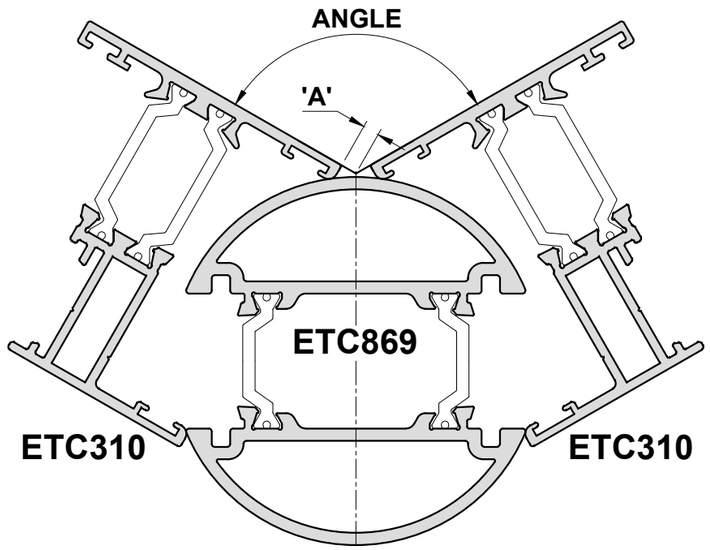

ANGLE	DEDUCTION 'A'
180°	18
175°	17
170°	15.5
165°	14.5
160°	13
155°	12
150°	10.5
145°	9
140°	8
135°	6.5
130°	5.5
125°	4
120°	2.5

Do Not Scale From This Drawing

Fixed Bay Pole Angle / Deduction

Sections

ETC302
ETC303
ETC304
ETC305
ETC306

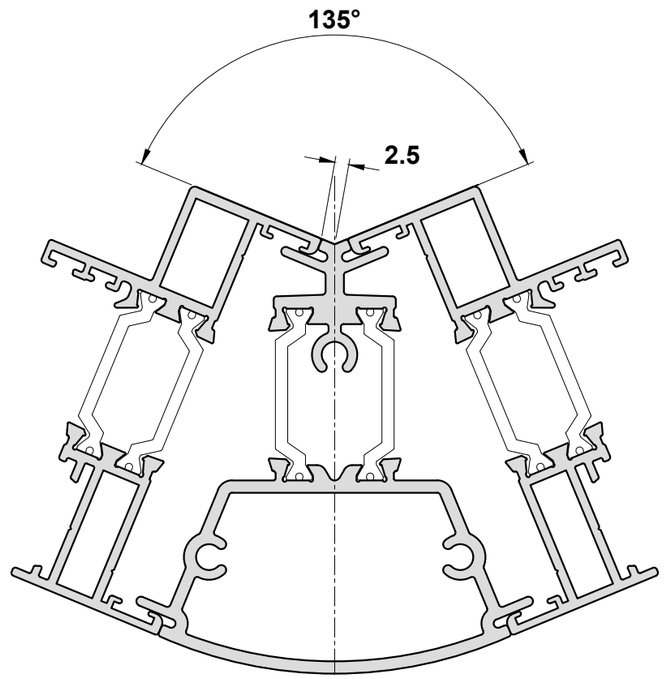

ETC385

Do Not Scale From This Drawing

70mm Outer Frame Bay Pole Angles/Deductions

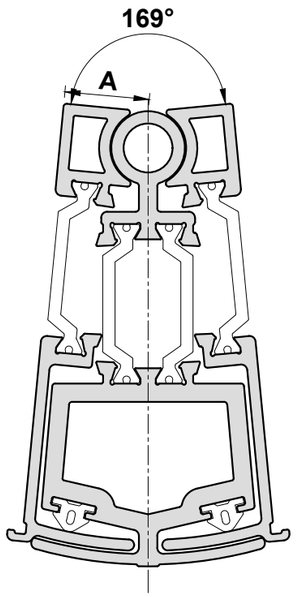

Important Note:
All joints must be adequately sealed using ACSIL04

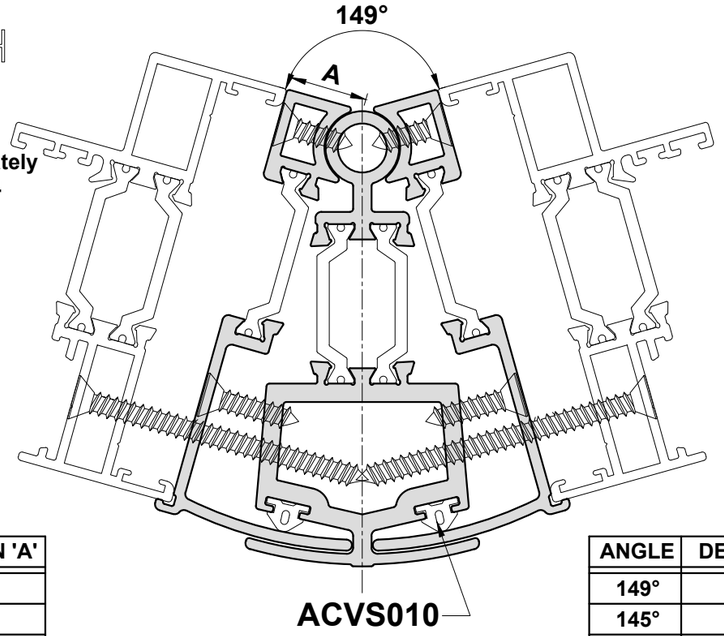

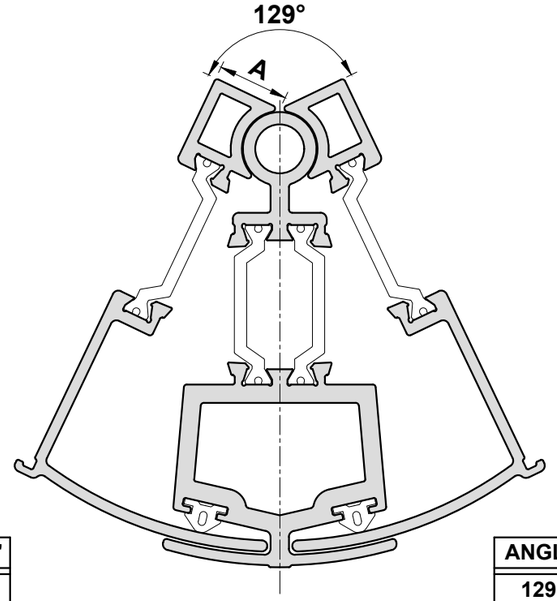

ANGLE	DEDUCTION 'A'
169°	14
165°	13.5
160°	13.6
155°	13
150°	13

ANGLE	DEDUCTION 'A'
149°	12.5
145°	12.5
140°	12
135°	12
130°	11.5

ANGLE	DEDUCTION 'A'
129°	11.5
125°	11.5
120°	11
115°	10.5

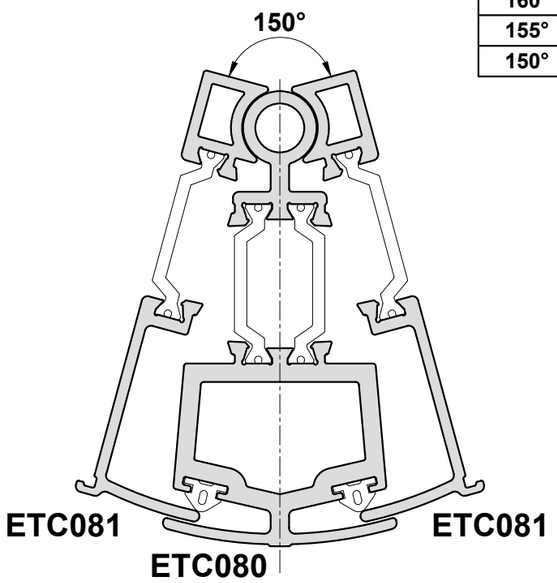

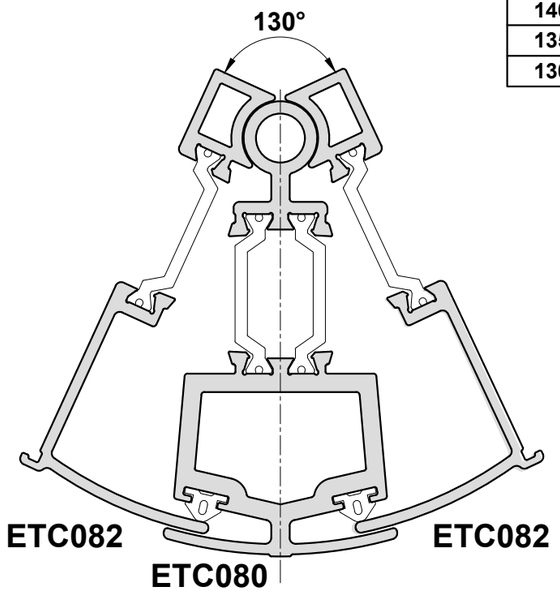

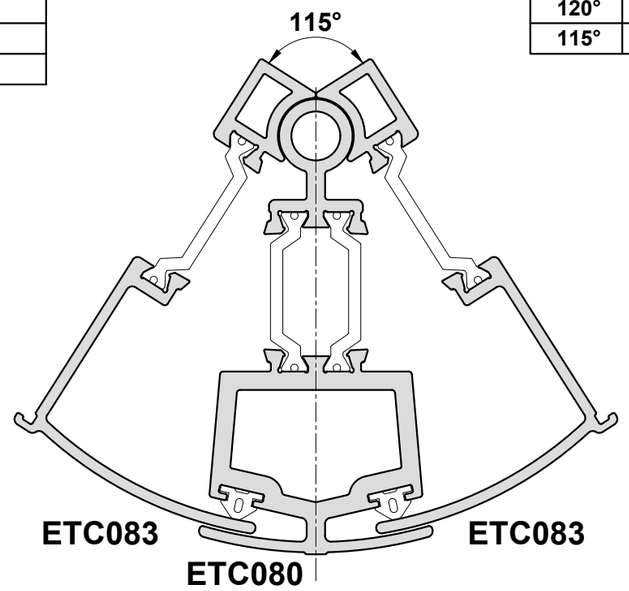

Fixing Strap Details

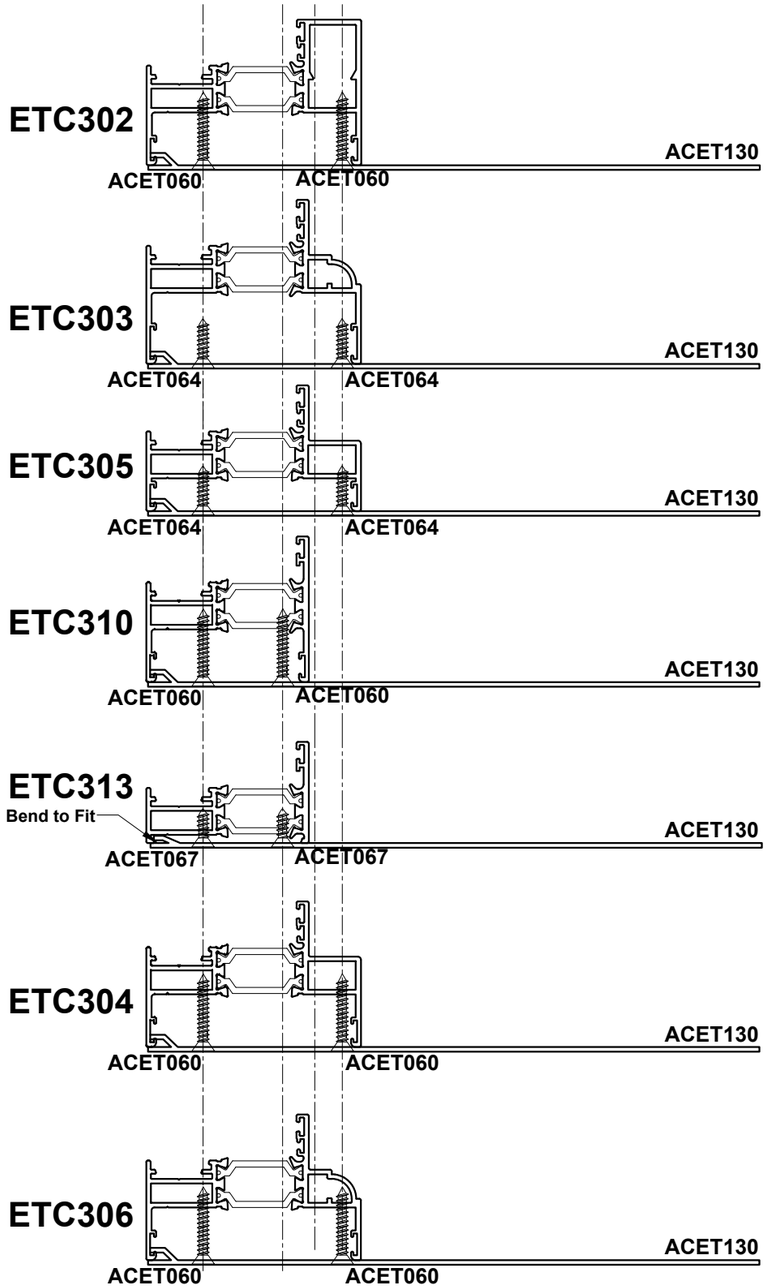

NOTE:
Fixing straps should be spaced a minimum of 150mm in from each end & at a maximum of 300mm apart.

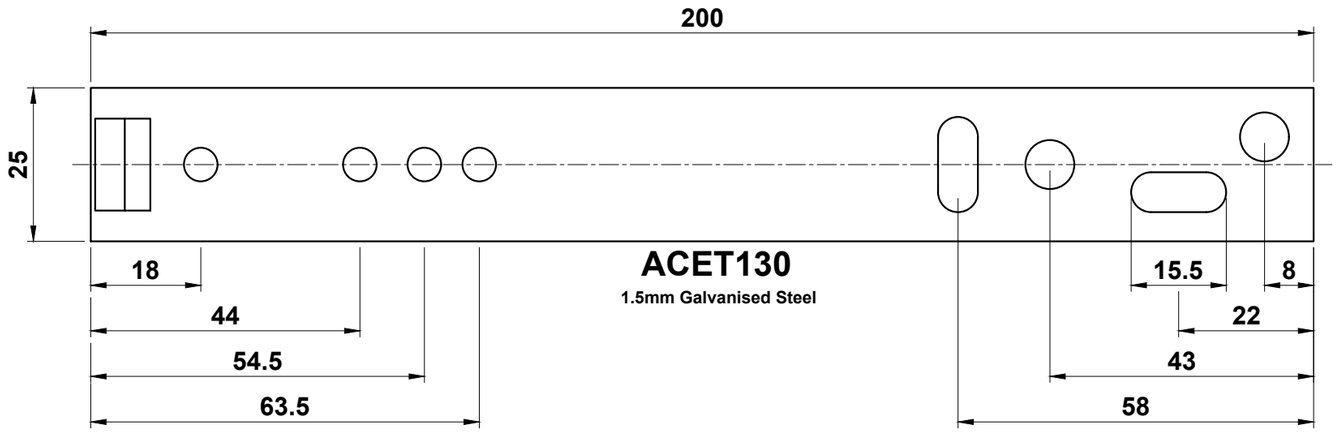

Section F

Sawing Tables

Cutting Information

Cutting Information - Standard Stays

PART DESCRIPTIONS	TYPICAL STYLES	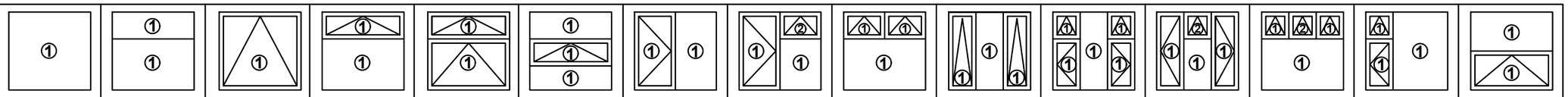														
Outer Frame	Head & Cill	W	W	W	W	W	W	W	W	W	W	W	W	W	W	W
	Jambs	H	H	H	H	H	H	H	H	H	H	H	H	H	H	H
	Transoms		W - 65		W - 65	W - 65	W - 65		OF to ℄M - 41.5	W - 65		OF to ℄M - 41.5	℄M to ℄M - 18	W - 65	OF to ℄M - 41.5	W - 65
	Mullions							H - 65	H - 65	OF to ℄T - 29.5	H - 65	H - 65	H - 65	OF to ℄T - 29.5	H - 65	
Vent (1)	Horizontal Components			W - 53	W - 53	W - 53	W - 53	OF to ℄M - 29.5	OF to ℄M - 29.5	OF to ℄M - 29.5	OF to ℄M - 29.5	OF to ℄M - 29.5	OF to ℄M - 29.5	OF to ℄M - 29.5	OF to ℄M - 29.5	W - 53
	Vertical Components			H - 53	OF to ℄T - 29.5	OF to ℄T - 29.5	℄T to ℄T - 6	H - 53	H - 53	OF to ℄T - 29.5	H - 53	OF to ℄T - 29.5	H - 53	OF to ℄T - 29.5	OF to ℄T - 29.5	OF to ℄T - 29.5
Vent (2)	Horizontal Components					W - 53			OF to ℄M - 29.5			OF to ℄M - 29.5	℄M to ℄M - 6	℄M to ℄M - 6	OF to ℄M - 29.5	
	Vertical Components					OF to ℄T - 29.5			OF to ℄T - 29.5			OF to ℄T - 29.5	OF to ℄T - 29.5	OF to ℄T - 29.5	OF to ℄T - 29.5	
Vent (1)	Glass Width			W - 124	W - 124	W - 124	W - 124	OF to ℄M - 100.5	OF to ℄M - 100.5	OF to ℄M - 100.5	OF to ℄M - 100.5	OF to ℄M - 100.5	OF to ℄M - 100.5	OF to ℄M - 100.5	OF to ℄M - 100.5	W - 124
	Glass Height			H - 124	OF to ℄T - 100.5	OF to ℄T - 100.5	℄T to ℄T - 81	H - 124	H - 124	OF to ℄T - 100.5	H - 124	OF to ℄T - 100.5	H - 124	OF to ℄T - 100.5	OF to ℄T - 100.5	OF to ℄T - 100.5
Vent (2)	Glass Width					W - 124			OF to ℄M - 100.5			OF to ℄M - 100.5	℄M to ℄M - 81	℄M to ℄M - 81	OF to ℄M - 100.5	
	Glass Height					OF to ℄T - 100.5			OF to ℄T - 100.5			OF to ℄T - 100.5	OF to ℄T - 100.5	OF to ℄T - 100.5	OF to ℄T - 100.5	
Fixed Panel (1)	Glass Width	W - 72	W - 72		W - 72		W - 72	OF to ℄M - 48.5	OF to ℄M - 48.5	W - 72	℄M to ℄M - 28	℄M to ℄M - 28	℄M to ℄M - 28	W - 72	OF to ℄M - 48.5	W - 72
	Glass Height	H - 72	OF to ℄T - 48.5		OF to ℄T - 48.5		OF to ℄T - 48.5	H - 72	OF to ℄T - 48.5	OF to ℄T - 48.5	H - 72	H - 72	OF to ℄T - 48.5	OF to ℄T - 48.5	H - 72	OF to ℄T - 48.5

LEGEND:

W = Overall window outer frame width - outside
H = Overall window outer frame height - outside
℄ = Centre line of transom/mullion
O/F = Extreme edge of outer frame

Sections:

Outerframe:	ETC302	ETC304
	ETC306	ETC310
Sash:	ETC326	
	ETC327	
	ETC329	
Transom/Mullion:	ETC333	

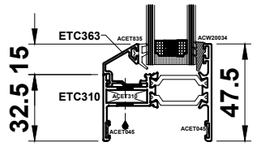

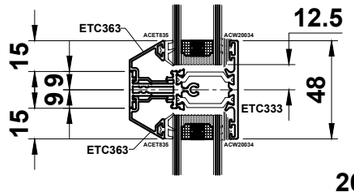

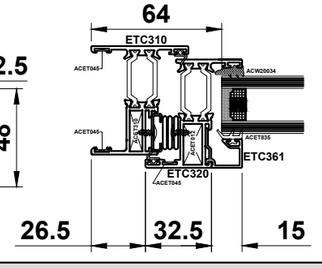

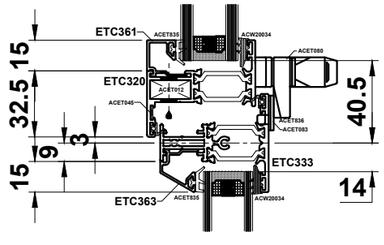

Do Not Scale From This Drawing

Cutting Information - Standard Stays

PART DESCRIPTIONS	TYPICAL STYLES	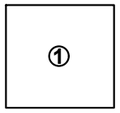	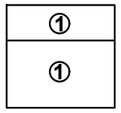		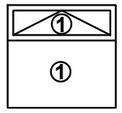	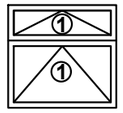	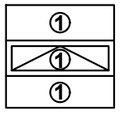	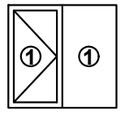	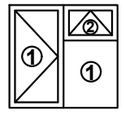	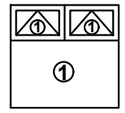	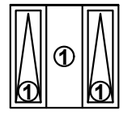	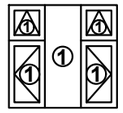	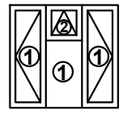	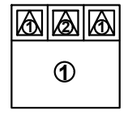	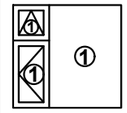	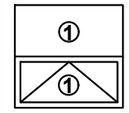
Outer Frame	Head & Cill	W	W	W	W	W	W	W	W	W	W	W	W	W	W	W
	Jambs	H	H	H	H	H	H	H	H	H	H	H	H	H	H	H
	Transoms		W - 77		W - 77	W - 77	W - 77		OF to ℄M - 47.5	W - 77		OF to ℄M - 47.5	℄M to ℄M - 18	W - 77	OF to ℄M - 47.5	W - 77
	Mullions							H - 77	H - 77	OF to ℄T - 35.5	H - 77	H - 77	H - 77	OF to ℄T - 35.5	H - 77	
Vent (1)	Horizontal Components			W - 65	W - 65	W - 65	W - 65	OF to ℄M - 35.5	OF to ℄M - 35.5	OF to ℄M - 35.5	OF to ℄M - 35.5	OF to ℄M - 35.5	OF to ℄M - 35.5	OF to ℄M - 35.5	OF to ℄M - 35.5	W - 65
	Vertical Components			H - 65	OF to ℄T - 35.5	OF to ℄T - 35.5	℄T to ℄T - 6	H - 65	H - 65	OF to ℄T - 35.5	H - 65	OF to ℄T - 35.5	H - 65	OF to ℄T - 35.5	OF to ℄T - 35.5	OF to ℄T - 35.5
Vent (2)	Horizontal Components					W - 65			OF to ℄M - 35.5			OF to ℄M - 35.5	℄M to ℄M - 6	℄M to ℄M - 6	OF to ℄M - 35.5	
	Vertical Components					OF to ℄T - 35.5			OF to ℄T - 35.5			OF to ℄T - 35.5	OF to ℄T - 35.5	OF to ℄T - 35.5	OF to ℄T - 35.5	
Vent (1)	Glass Width			W - 140	W - 140	W - 140	W - 140	OF to ℄M - 110.5	OF to ℄M - 110.5	OF to ℄M - 110.5	OF to ℄M - 110.5	OF to ℄M - 110.5	OF to ℄M - 110.5	OF to ℄M - 110.5	OF to ℄M - 110.5	W - 140
	Glass Height			H - 140	OF to ℄T - 110.5	OF to ℄T - 110.5	℄T to ℄T - 81	H - 140	H - 140	OF to ℄T - 110.5	H - 140	OF to ℄T - 110.5	H - 140	OF to ℄T - 110.5	OF to ℄T - 110.5	OF to ℄T - 110.5
Vent (2)	Glass Width					W - 140			OF to ℄M - 110.5			OF to ℄M - 110.5	℄M to ℄M - 81	℄M to ℄M - 81	OF to ℄M - 110.5	
	Glass Height					OF to ℄T - 110.5			OF to ℄T - 110.5			OF to ℄T - 110.5	OF to ℄T - 110.5	OF to ℄T - 110.5	OF to ℄T - 110.5	
Fixed Panel (1)	Glass Width	W - 87	W - 87		W - 87		W - 87	OF to ℄M - 57.5	OF to ℄M - 57.5	W - 87	℄M to ℄M - 28	℄M to ℄M - 28	℄M to ℄M - 28	W - 87	OF to ℄M - 57.5	W - 87
	Glass Height	H - 87	OF to ℄T - 57.5		OF to ℄T - 57.5		OF to ℄T - 57.5	H - 87	OF to ℄T - 57.5	OF to ℄T - 57.5	H - 87	H - 87	OF to ℄T - 57.5	OF to ℄T - 57.5	H - 87	OF to ℄T - 57.5

LEGEND:

W = Overall window outer frame width - outside
H = Overall window outer frame height - outside
℄ = Centre line of transom/mullion
O/F = Extreme edge of outer frame

Sections:

Outerframe:	ETC303
Sash:	ETC326 ETC327 ETC329
Transom/Mullion:	ETC333

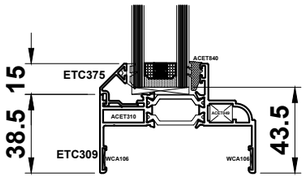

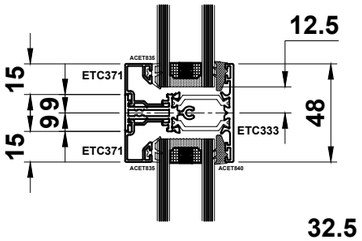

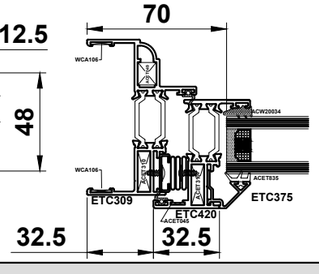

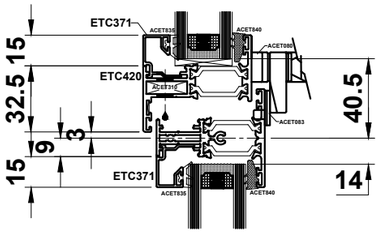

Do Not Scale From This Drawing