Main Index

Main Index

E DV

Construction Details - Open In

F DV

Sawing Tables - Cutting Information

Updates

DATE	PAGE	DESCRIPTION
12-06-17	E07 & E33	Code for hinge tapping plate removed as it is supplied with hinge.
20-07-17	E09, E10, E12, E34, E35 & E37	Updated information for primary and secondary door preps
18-01-18	A08 & A14	Added DV62 & DV68

Specification

GENERAL DESCRIPTION

The Visofold 6000 described in this manual is suitable for domestic or commercial applications and provides various opening options within impressive dimension and weight limitations using slim-line sections.

PROFILE SPECIFICATION

The frames are constructed of aluminium alloy extrusion to BS EN 755, extruded from 6063 T6 alloy.
The external aluminium alloy extrusion is pre-treated and finished either in :-

a) Anodised to BS 3987: 1987, grade AA25 to a natural self colour.

b) Polyester powder organic coating to BS 6496.

GENERAL MANUFACTURING

Frames are made by cutting the profiles with accurate 45° mitred ends using Tungsten Carbide Tipped Saw Blades, operating at approximately 3000 rpm.

The joints of the screen are made using mechanically fixed corner cleats unless a low threshold is used which requires stainless steel self tapping screws to be fixed through the vertical members of the outerframe. Door joints are achieved with the use of mechanically fixed corner cleats. All joints should be sealed using an adequate sealant.

Care should be exercised when using products not supplied by Smart Systems Ltd as no responsibility can be accepted.

RECOMMENDED DESIGN LIMITATIONS

Sliding Folding Doors

Minimum Sash Width: 700mm
Maximum Sash Width: 1000mm
Maximum Sash Height: 2200mm (dependant on site conditions)
Maximum Sash Weight: 100kg

Specification

DRAINAGE

As with all dry glazed systems, it is recommended that the system is drained and ventilated as shown in this manual. IF IN DOUBT ASK.

OUTER FRAME MANUFACTURING INFORMATION

The outer frame members are cut with 45° mitred ends to the overall size required.

The mitred ends are then prepared using the punch tool ACDV900 to provide the access for the fixing block and to the grub screw that secures it.

All joints should be sealed using ACSIL04 and with cleat glue ACSIL013.

Holes for the low threshold are drilled to the dimensions shown in the manual. All joints should be sealed using ACSIL04

DOOR LEAF MANUFACTURING INFORMATION

The door stiles and rails are cut with 45° mitres to the overall size required.

DOOR FITTINGS

Visofold 6000 offers multi-point locking for the primary leaf which is locked by lifting the handle and turning the key of the europrofile cylinder.

Secondary doors are closed using a shootbolt which engages into the head and threshold using a rotating handle which operates 170 degrees to allow access to the optional europrofile half cylinder. There is no external access to the shootbolt locking.

The cylinders can be ordered as keyed alike.

Specification

GLAZING

All beads are cut to suit the glazing aperture on the fully assemble door for glazing either at factory or on site as required.
Visofold 6000 can accept glazing up to 40mm thick.
External gaskets are compatible with Pilkington Active sealed units.

Please note that glass weights MUST be considered as this could restrict the maximum size of the sash.

Specification

Visofold 6000 Weather Performance

BS EN 1026: 2000 Air Permeability:	Class 2	600 Pa
BS EN 1027: 2000 Watertightness:	Class 8a	450 Pa
BS EN 12211: 2000 Resistance to Wind Load:	Class A3	1200 Pa

Based upon Type.1 test sample. Further testing to be scheduled.

Visofold 6000 U Values

Please refer to the Smart Systems' Document L White Paper or contact the Technical Department.

Number	Picture	Page	Perim. mm	Mec. mm	Ix(cm4) wx(cm3)	Iy(cm4) wy(cm3)	Length	Pack pr.	MF	SA	KL	HP	M
DV38	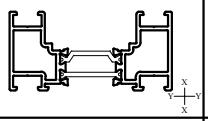	A15	371	37	33.7 / ----- / 9.1	5.1 / ----- / 3.2	6.5	1	✓	✓	✓	✓	✓
DV62		A14	-	-	- / –– / -	- / — / -	4	1		✓			
DV68	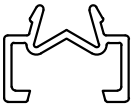	A14	98	4	- / –– / -	- / — / -	6.5	1	✓	✓	✓	✓	
DV545N	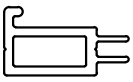	A15	85	17	- / –– / -	- / — / -	6.5	1	✓	✓	✓	✓	
DV570	A 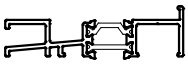 B	A17	354	34	19.2 / –– / 4.9	1 / — / 1	6.5	1	✓	✓	✓	✓	✓
DV610	A 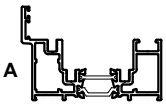 B **Open in shown.** **Reverse for open out.**	A13	463	101	47.2 / –– / 5.85	11 / — / 1	6.5	1	✓	✓	✓	✓	✓
DV612	A 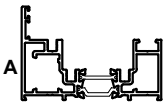 B **Open in shown.** **Reverse for open out.**	A13	464	96	51.7 / –– / 14.1	11.4 / — / 6	6.5	1	✓	✓	✓	✓	✓
DV620	A 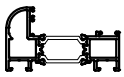 B	A14	343	81	30.9 / –– / 7.6	5.1 / — / 2.1	6.5	1	✓	✓	✓	✓	✓
DV622	A 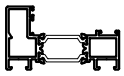 B	A14	348	86	32 / –– / 9.6	5.7 / — / 3.3	6.5	1	✓	✓	✓	✓	✓

A = Outside
B = Inside

MF = Mill Finish
SA = Silver Anodised
KL = Basic Colour
HP = Special Colour
M = Dual Colour

Number	Picture	Page	Perim. mm	Mec. mm	Ix(cm4) wx(cm3)	Iy(cm4) wy(cm3)	Length	Pack pr.	MF	SA	KL	HP	M
DV640	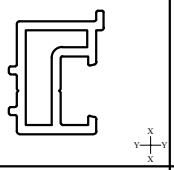	A16	103	16	- / -- / -	- / -- / -	6.5	1	✓	✓	✓	✓	
DV645	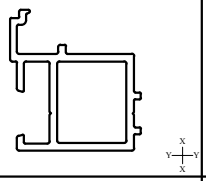	A16	158	26	- / -- / -	- / -- / -	6.5	1	✓	✓	✓	✓	
DV662	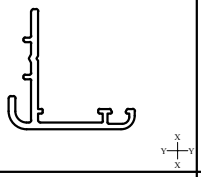	A15	139	37	- / -- / -	- / -- / -	5	1	✓	✓	✓	✓	
DV670	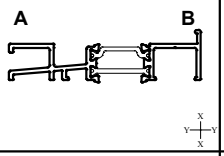	A17	354	34	23.6 / -- / 5.7	1 / -- / 1	6.5	1	✓	✓	✓	✓	✓
ETC267	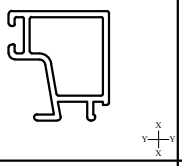	A18	90	32	- / -- / -	- / -- / -	6.5	1	✓	✓	✓	✓	
ETC270	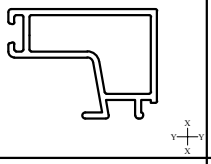	A18	106	40	*** / -- / ***	*** / -- / ***	6.5	1	✓	✓	✓	✓	
ETC272	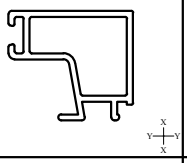	A18	98	36	*** / -- / ***	*** / -- / ***	6.5	1	✓	✓	✓	✓	
ETC348	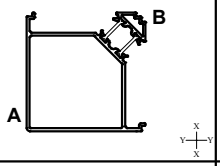	A19	439	158	54.7 / -- / 14	54.7 / -- / 13.9	6.5	1	✓	✓	✓	✓	✓
ETC357	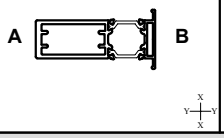	A19	298	73	41.5 / -- / 9.9	5.2 / -- / 2.7	6.5	1	✓	✓	✓	✓	✓

A = Outside
B = Inside

MF = Mill Finish
SA = Silver Anodised
KL = Basic Colour
HP = Special Colour
M = Dual Colour

Visofold 6000

PROFILES : TECHNICAL INFORMATION

Number	Picture	Page	Perim. mm	Mec. mm	Ix(cm4) wx(cm3)	Iy(cm4) wy(cm3)	Length	Pack pr.	MF	SA	KL	HP	M
ETC451	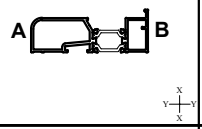	A21	304	109	32.44 ----- 7.29	3.46 ----- 2.79	6.5	1	✓	✓	✓	✓	✓
ETC452	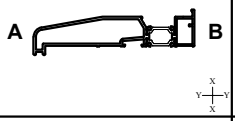	A21	414	197	122.46 ----- 18.03	6.01 ----- 3.34	6.5	1	✓	✓	✓	✓	✓
ETC457	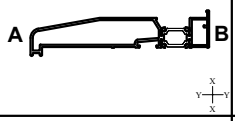	A21	444	212	163.27 ----- 21.60	6.79 ----- 3.73	6.5	1	✓	✓	✓	✓	✓
ETC458	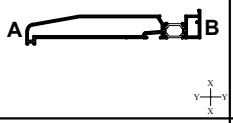	A22	524	252	313.62 ----- 32.63	8.87 ----- 4.79	6.5	1	✓	✓	✓	✓	✓
ETC477	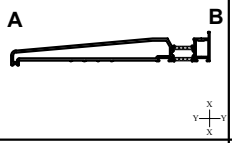	A23	782	404	1591.6 ----- 105.33	26.84 ----- 12.84	5	1	✓	✓	✓	✓	✓
ETC479	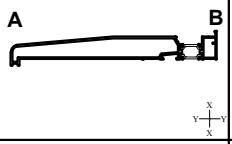	A22	594	287	501.64 ----- 44.04	9.72 ----- 5.34	6.5	1	✓	✓	✓	✓	✓
ETC515N	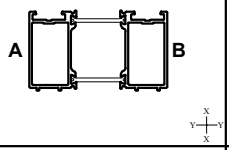	A20	356	85	33.0 --- 8.7	10.65 --- 5.01	6.5	1	✓	✓	✓	✓	✓
ETC667	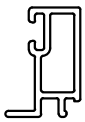	A18	78	24	- --- -	- --- -	6.5	1	✓	✓	✓	✓	
PCX15	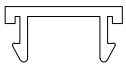 PVC	A20	-	-	- --- -	- --- -	4	1	✓				

A = Outside
B = Inside

MF = Mill Finish
SA = Silver Anodised
KL = Basic Colour
HP = Special Colour
M = Dual Colour

ISSUED : JANUARY 2018

Number	Picture	Page	Perim. mm	Mec. mm	Ix(cm4) wx(cm3)	Iy(cm4) wy(cm3)	Length	Pack pr.	MF	SA	KL	HP	M
PCX38	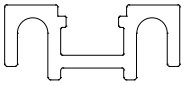 PVC	A17	-	-	- / -	- / -	3	1	✓				
PCX44	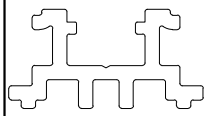 PVC	A17	-	-	- / -	- / -	3	1	✓				
VG52	 PVC	A20	-	-	- / -	- / -	7	1	✓				
VG53	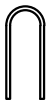 Stainless steel.	A20	-	-	- / -	- / -	6.5	*	✓				
VL72	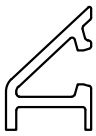	A20	101	32	- / -	- / -	6.5	1	✓	✓	✓	✓	

A = Outside
B = Inside

MF = Mill Finish
SA = Silver Anodised
KL = Basic Colour
HP = Special Colour
M = Dual Colour

Primary Visible Side - - - - - - - - - - - - - - - - - - Secondary Visible Side — · — · — · — · — · — · — · —

DV610

Outer Frame

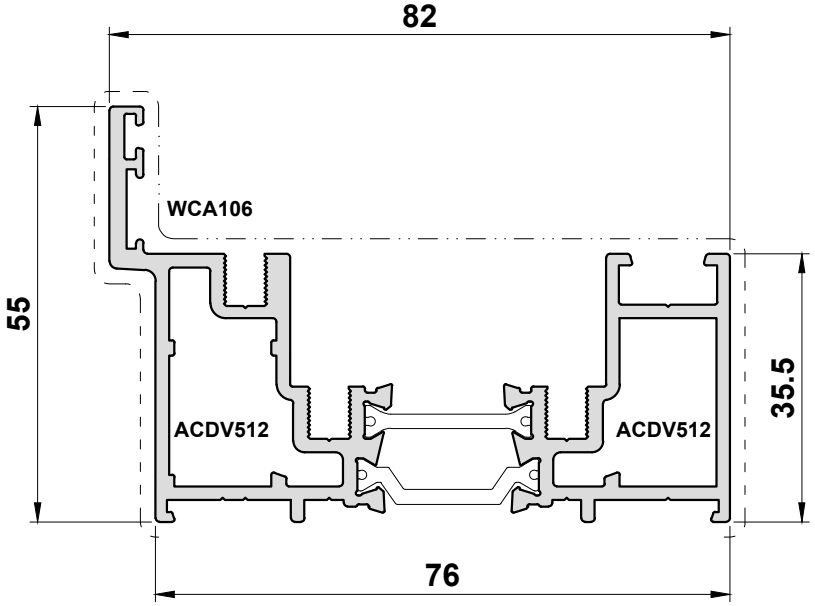

DV612

Flat Outer Frame

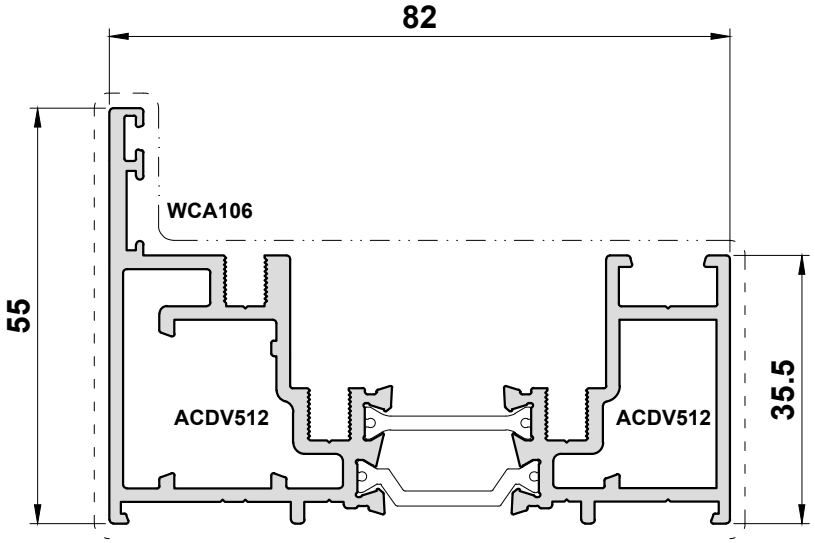

Scale 1:1

Primary Visible Side - - - - - - - - - - - - - - - - - - Secondary Visible Side — · — · — · — · — · — · — · —

DV620

Curved Bi-Fold Sash

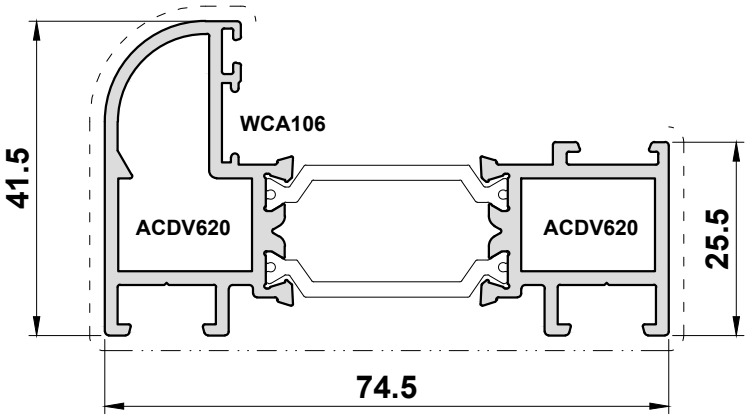

DV622

Square Bi-Fold Sash

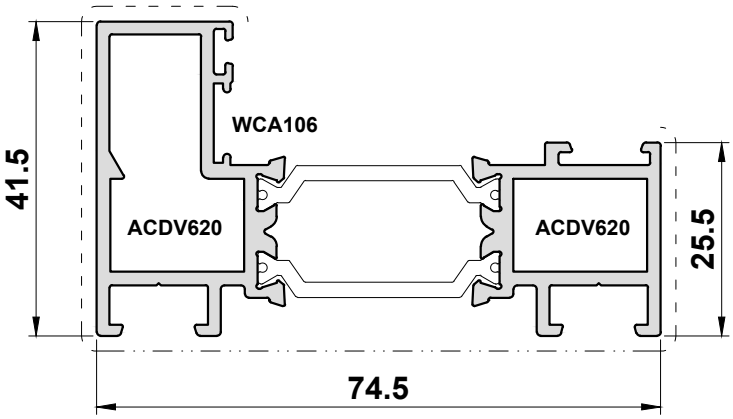

Scale 1:1

Primary Visible Side - - - - - - - - - - - - - - - - Secondary Visible Side — · — · — · — · — · — · — · —

DV38
Floating Mullion

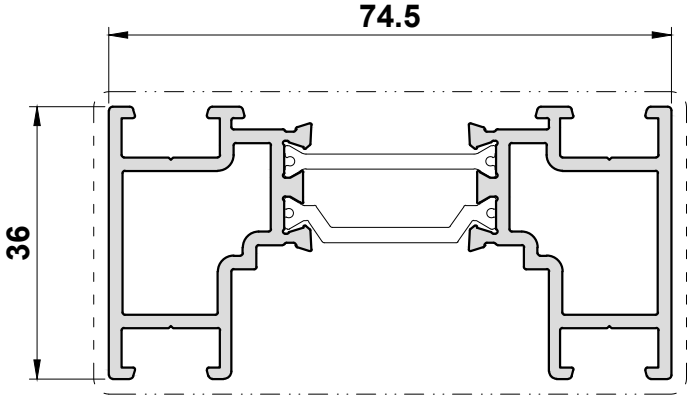

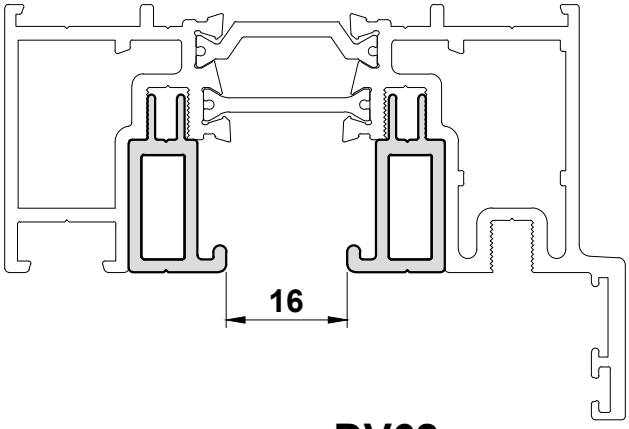

DV545N
Top Guide Insert

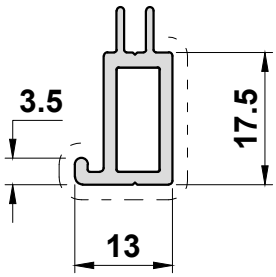

DV62
Low Threshold
Woolpile Carrier

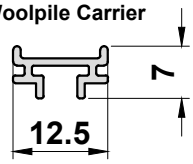

DV662
Locking Stile Rebate

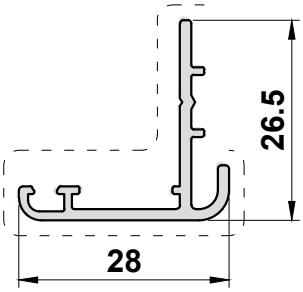

DV68
Gasket Carrier

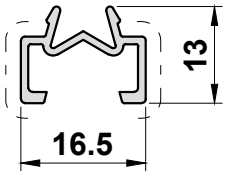

Scale 1:1

Primary Visible Side - - - - - - - - - - - - - - - - - - Secondary Visible Side — · — · — · — · — · — · — · —

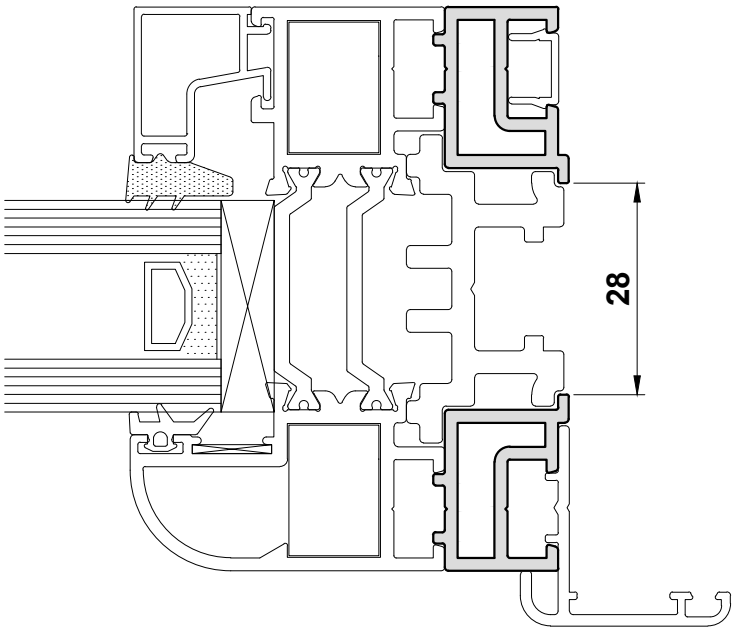

DV640

Lock adapter

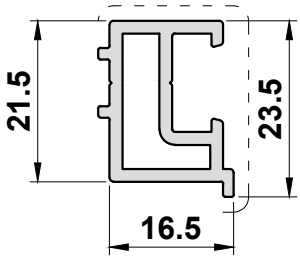

End Cap: ACDV640

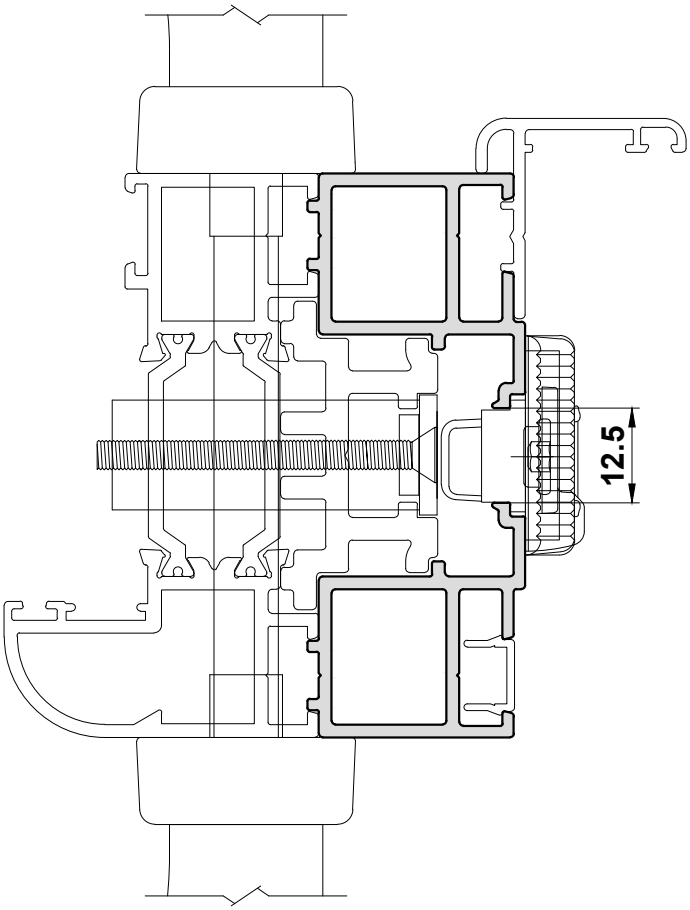

DV645

Lock adapter

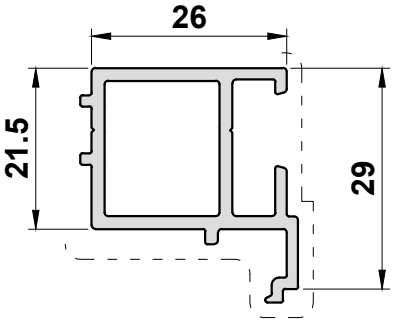

End Cap: ACDV642

Scale 1:1

Primary Visible Side - - - - - - - - - - - - - - - - - - Secondary Visible Side — · — · — · — · — · — · — · —

DV570

DV610 Flush Cill

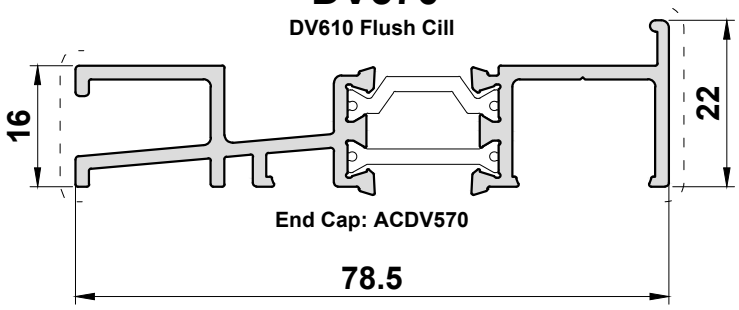

DV670

DV612 Flush Cill

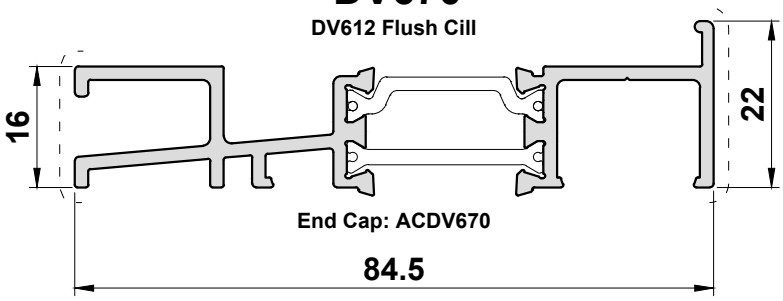

PCX44

PVC Lock Carrier

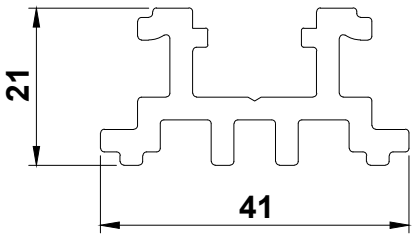

PCX38

PVC Lock Carrier

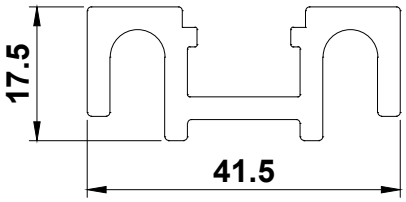

Scale 1:1

Primary Visible Side - - - - - - - - - - - - - - - - Secondary Visible Side — · — · — · — · — · — · — · —

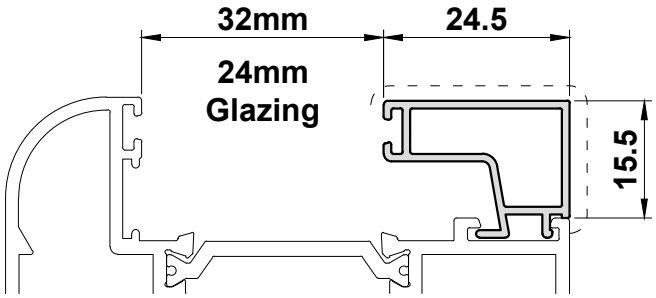

ETC270

24mm Glazing Bead

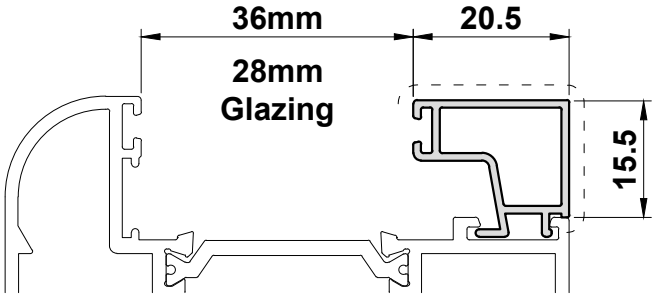

ETC272

28mm Glazing Bead

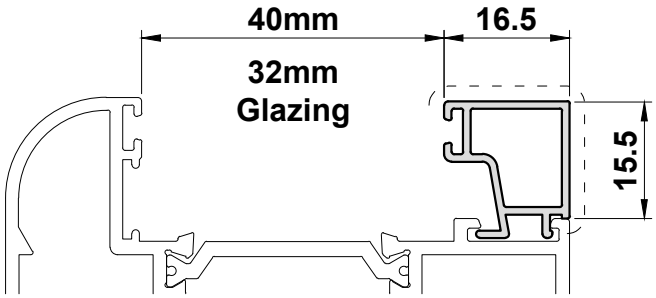

ETC267

32mm Glazing Bead

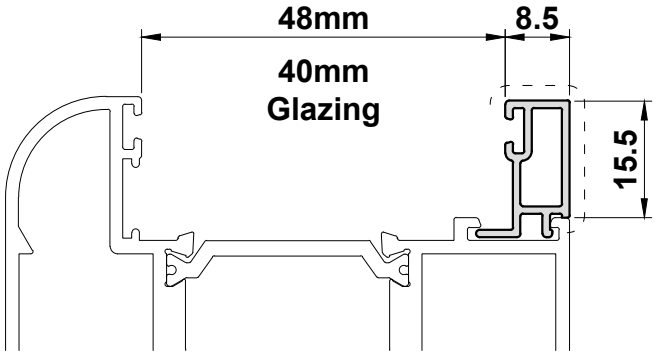

ETC667

40mm Glazing Bead

Scale 1:1

Primary Visible Side - - - - - - - - - - - - - - - - - - Secondary Visible Side — · — · — · — · — · — · — · —

ETC348

90° Corner Post

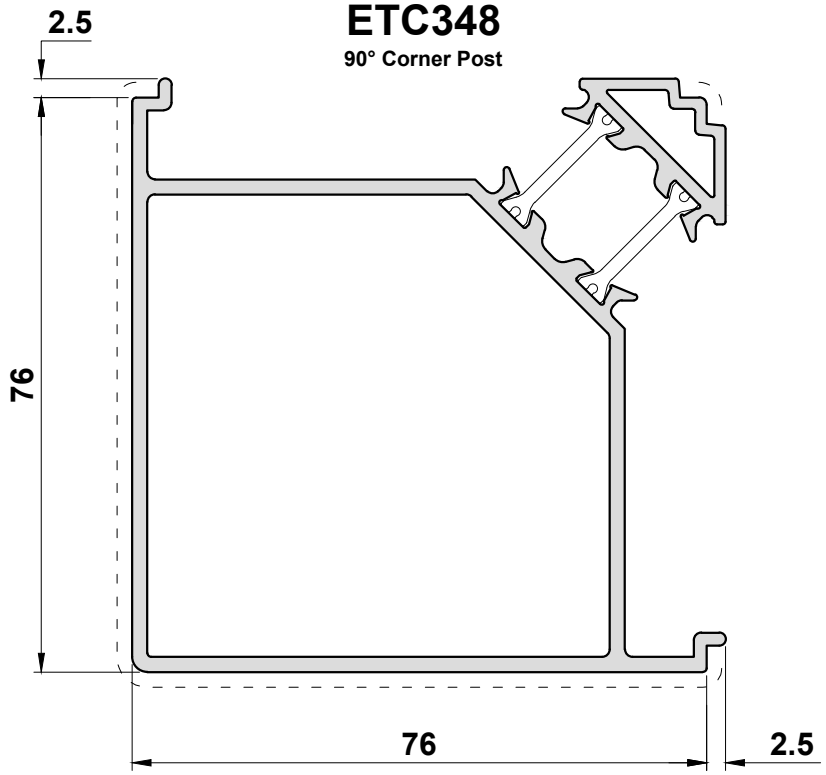

ETC357

Coupler

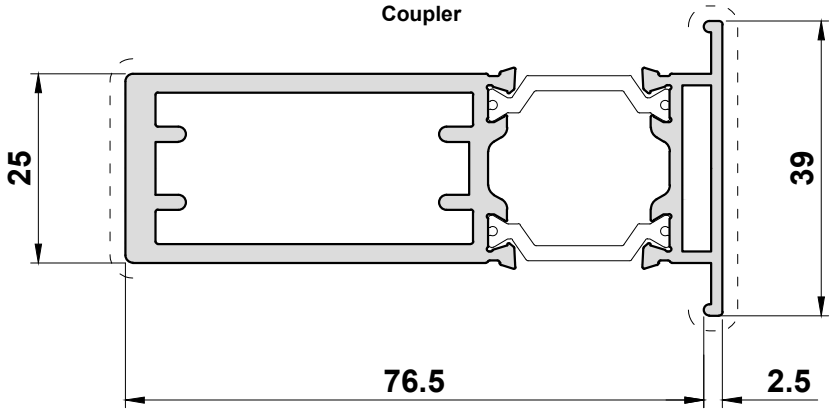

Scale 1:1

Primary Visible Side - - - - - - - - - - - - - - - - - - Secondary Visible Side — · · — · · — · · — · · — · · — · · —

ETC515N

DV610 Head Extension

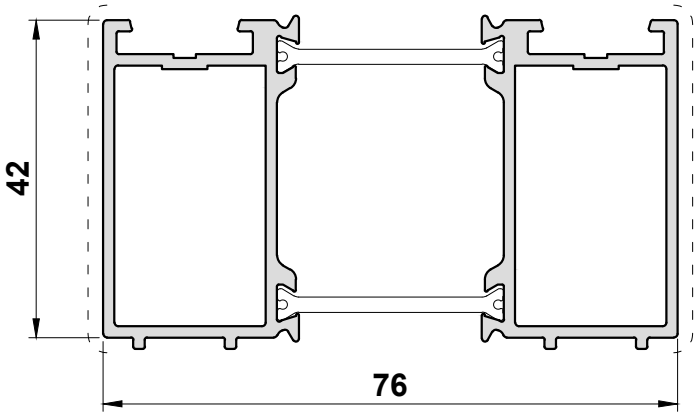

VG52

PVC Track Infill Strip

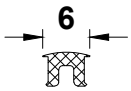

VG53

Stainless Steel Track Insert

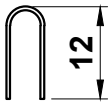

PCX15

PVC Infill Strip

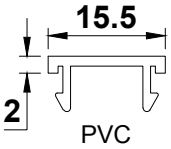

VL72

Weather Bar

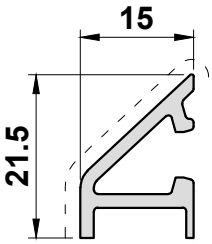

Scale 1:1

Primary Visible Side — Secondary Visible Side — · — · — · — · — · — · — · — · — · —

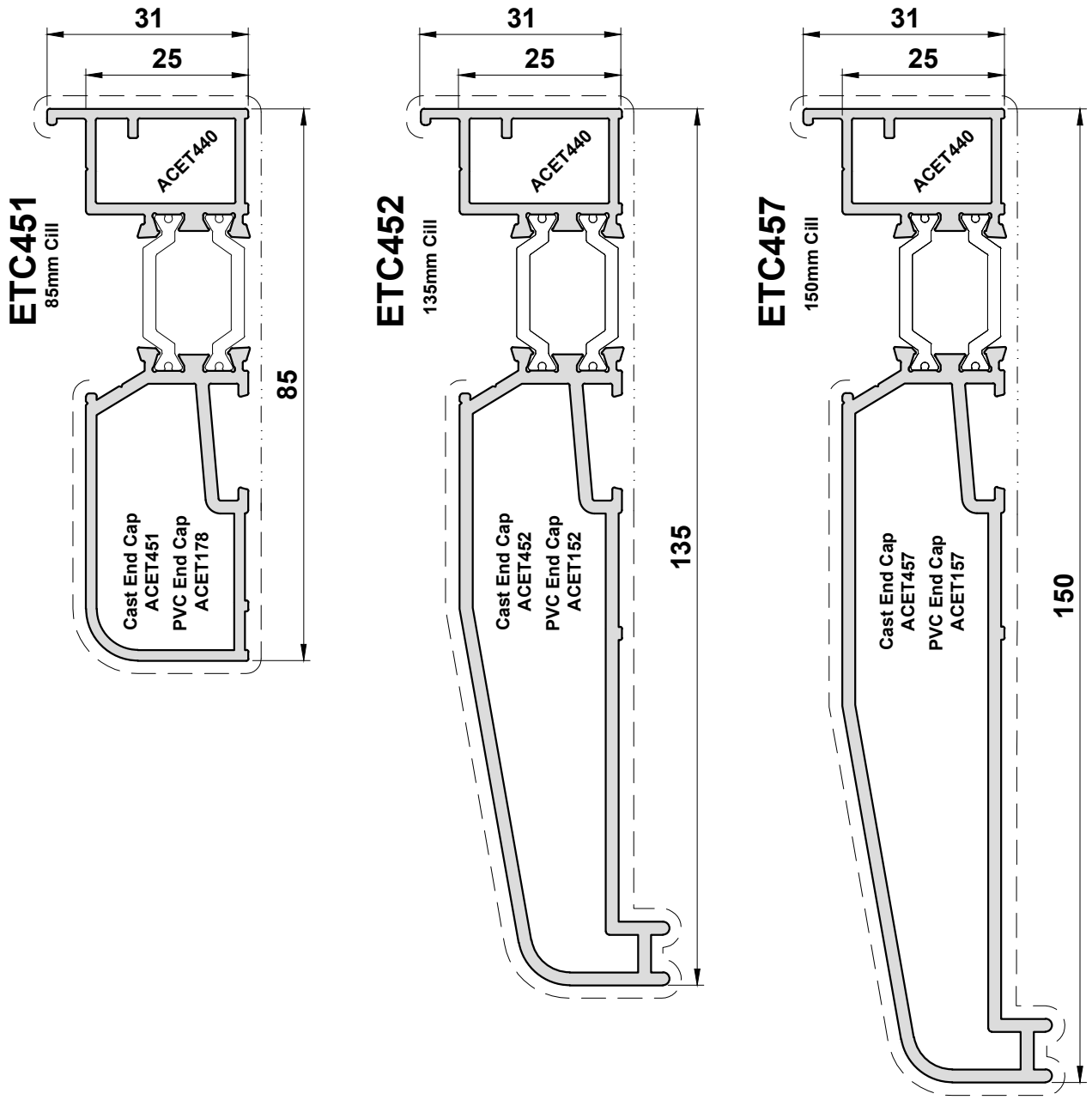

Scale 1:1

Primary Visible Side — — — — — — — — — — — — — — — — — — Secondary Visible Side — · — · — · — · — · — · —

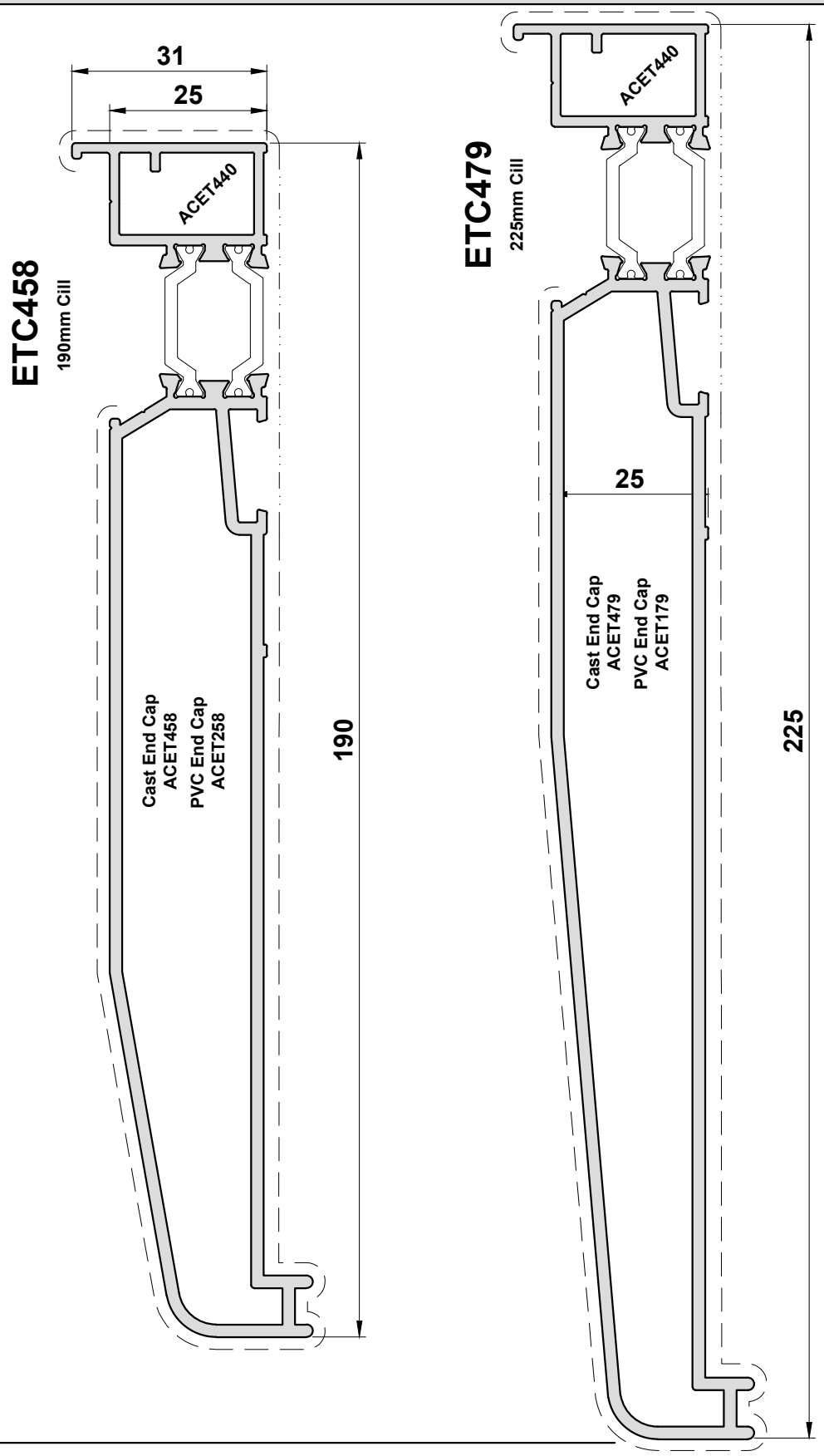

Scale 1:1

Primary Visible Side - - - - - - - - - - - - - - - - - - Secondary Visible Side — · · — · · — · · — · · — · · — · · — · · —

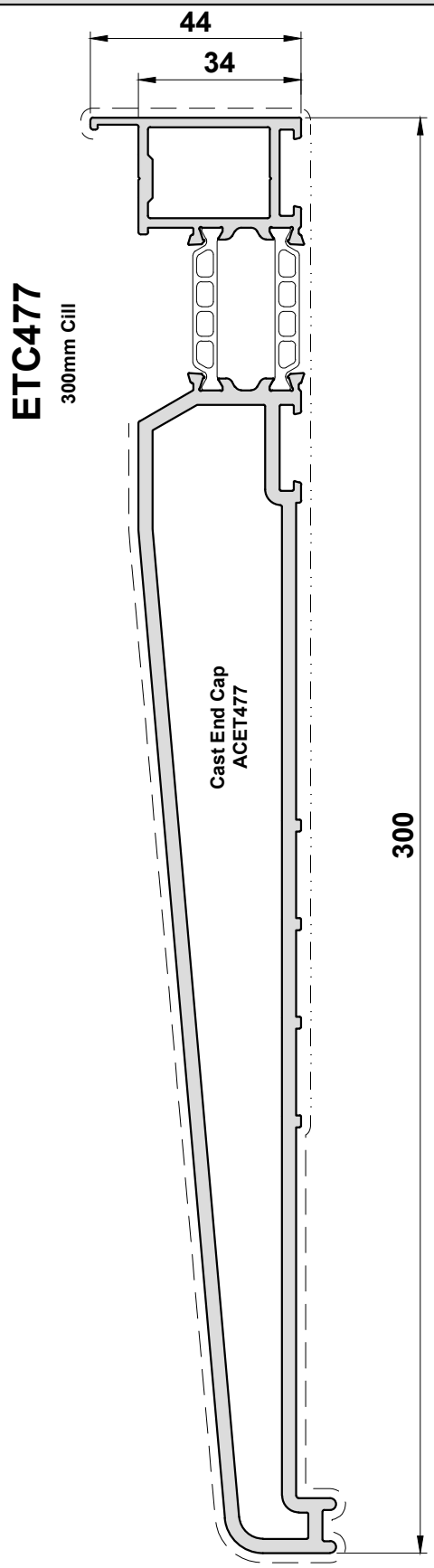

Section B

Accessories

Photos & Drawings

Section B

Image	Part Code	Pack	Unit	Application	Colour	
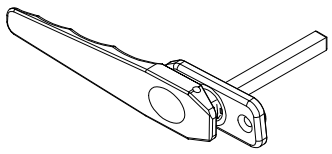	**ACDV226** **Shootbolt Operating Handle.**	1	Each	DV620 DV622	MF	
					SA	
					KL	
					HP	
					SSC	
					SMC	
					PC	✓
					W	✓
					Z	✓
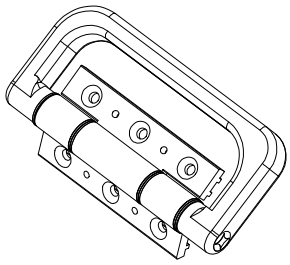	**ACDV234** **Open Out D Handle Hinge Assembly** **Note: The Chrome Version of ACDV234 Has a Black Hinge & Chrome 'D'**	1	Each	DV620 DV622	MF	✓
					SA	
					KL	✓
					HP	✓
					SSC	
					SMC	
					PC	✓
					W	✓
					Z	✓
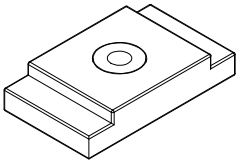	**ACDV241** **Tapping Block**	50	Pack	DV620 DV622	MF	
					SA	
					KL	
					HP	
					SSC	
					SMC	
					PC	
					W	
					Z	✓
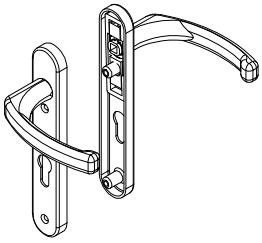	**ACDV251** **Lever Lever Handle.** **(Includes Fixings And Spindle)**	1	Pair	DV620 DV622 ACDV258	MF	
					SA	
					KL	✓
					HP	✓
					SSC	
					SMC	
					PC	✓
					W	✓
					Z	✓
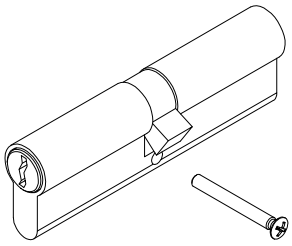	**ACDV258** **50/50 Euro Cylinder For Use With ACDV251 Only** **For keyed alike order** **ACDV258 SL**	1	Each	ACDV251 ACET480 ACET484 ACET485 ACET486 ACET487 ACET488	MF	✓
					SA	
					KL	
					HP	
					SSC	
					SMC	
					PC	
					W	
					Z	

T-BARS
ACVG65=2.5mm
ACVG66=3.0mm
ACVL150=4.0mm

Screw (Grub)

MF	= Mill Finish	W	= White
SA	= Silver Anodised	Z	= Black
KL	= Basic Colour		
HP	= Special Colour		
SSC	= Smooth Satin Chrome		
SMC	= Smokey Chrome		
PC	= Polished Chrome		

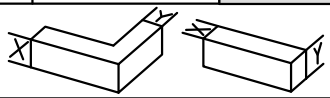

Image	Part Code	Pack	Unit	Application	Colour	
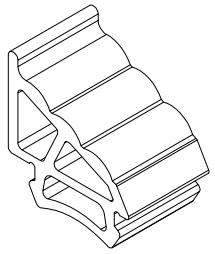	**ACDV272** **Sealing Gasket**	**100**	**m**	**DV620** **DV622** **DV610** **DV612** **DV38**	MF SA KL HP SSC SMC PC W Z	 ✓
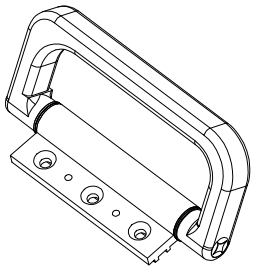	**ACDV274** **Open In D Handle Hinge Assembly** **Note: The Chrome Version of ACDV234 Has a Black Hinge & Chrome 'D'**	**1**	**Each**	**DV620** **DV622**	MF SA KL HP SSC SMC PC W Z	✓ ✓ ✓ ✓ ✓ ✓ ✓
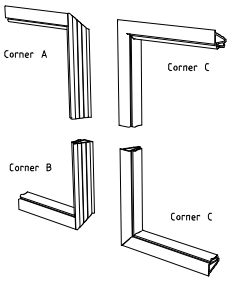	**ACDV275** **Corner Gaskets To Join ACDV272 Around Sash** **1 set = 1 sash** **To order an individual corner type, specify letter after code: ACDV275/B.**	**10**	**Sets**	**DV620** **DV622** **DV610** **DV612**	MF SA KL HP SSC SMC PC W Z	 ✓
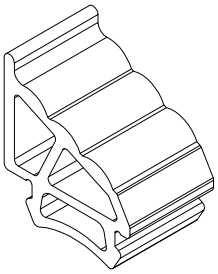	**ACDV276** **Oversize Version Of ACDV272 (Only To Be Used When Necessary)**	**100**	**m**	**DV620** **DV622** **DV610** **DV612** **DV38**	MF SA KL HP SSC SMC PC W Z	 ✓
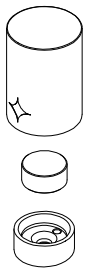	**ACDV305** **Magnetic Door Holder** **Use Screws ACET060 & MUA025**	**1**	**Each**	**DV620** **DV622**	MF SA KL HP SSC SMC PC W Z	✓ ✓ ✓ ✓ ✓

T-BARS
ACVG65=2.5mm
ACVG66=3.0mm
ACVL150=4.0mm

Screw (Grub)

MF = Mill Finish
SA = Silver Anodised
KL = Basic Colour
HP = Special Colour
SSC = Smooth Satin Chrome
SMC = Smokey Chrome
PC = Polished Chrome
W = White
Z = Black

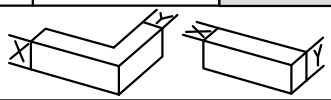

Image	Part Code	Pack	Unit	Application	Colour	
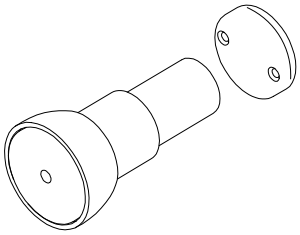	**ACDV308** **Small Magnetic Catch** **Use Screws ACET060 & MUA025**	1	Each	DV622	MF	✓
					SA	
					KL	
					HP	
					SSC	
					SMC	
					PC	✓
					W	
					Z	
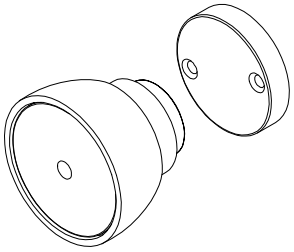	**ACDV309** **Small Magnetic Catch** **Use Screws ACET060 & MUA025**	1	Each	DV622	MF	✓
					SA	
					KL	
					HP	
					SSC	
					SMC	
					PC	✓
					W	
					Z	
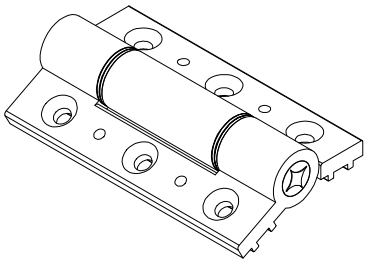	**ACDV331** **Intermediate Hinge.**	1	Each	DV620 DV622	MF	✓
					SA	
					KL	✓
					HP	✓
					SSC	
					SMC	
					PC	
					W	✓
					Z	✓
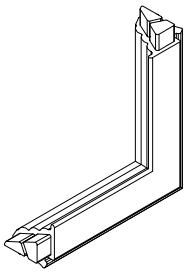	**ACDV375** **Corner Gaskets To Join ACDV272 Around Outer Frame**	1	Each	DV620 DV622	MF	
					SA	
					KL	
					HP	
					SSC	
					SMC	
					PC	
					W	
					Z	✓
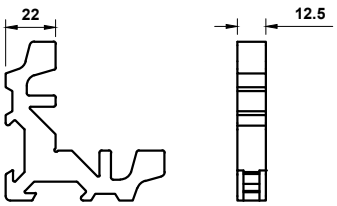	**ACDV512** **Mechanical Corner Cleat**	24	Pack	DV610 DV612	MF	✓
					SA	
					KL	
					HP	
					SSC	
					SMC	
					PC	
					W	
					Z	

T-BARS
ACVG65=2.5mm
ACVG66=3.0mm
ACVL150=4.0mm

Screw (Grub)

MF = Mill Finish
SA = Silver Anodised
KL = Basic Colour
HP = Special Colour
SSC = Smooth Satin Chrome
SMC = Smokey Chrome
PC = Polished Chrome
W = White
Z = Black

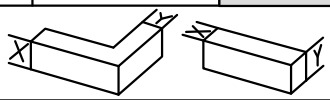

Image	Part Code	Pack	Unit	Application	Colour	
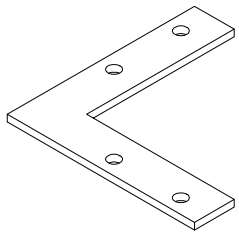	**ACDV552N** **90° Outerframe Fixing Bracket**	**4**	**Pack**	**DV610** **DV612**	MF	
					SA	
					KL	
					HP	
					SSC	
					SMC	
					PC	
					W	
					Z	
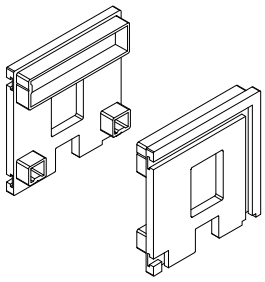	**ACDV555** **PVC End Cap For DV555 Corner Post.**	**10**	**Pairs**	**DV555**	MF	
					SA	
					KL	
					HP	
					SSC	
					SMC	
					PC	
					W	
					Z	✓
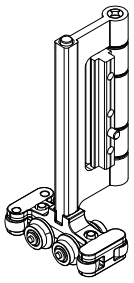	**ACDV566** **Slim Line Bottom Roller**	**1**	**Each**	**DV620** **DV622**	MF	✓
					SA	✓
					KL	✓
					HP	✓
					SSC	
					SMC	
					PC	
					W	✓
					Z	✓
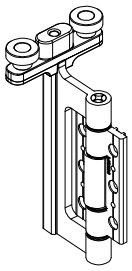	**ACDV567** **Slim Line Top Guide with Fixing Kit**	**1**	**Each**	**DV620** **DV622**	MF	✓
					SA	✓
					KL	✓
					HP	✓
					SSC	
					SMC	
					PC	
					W	✓
					Z	✓
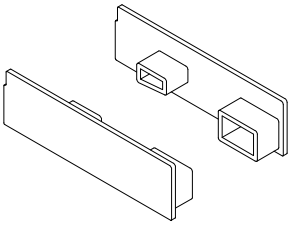	**ACDV570** **PVC End Cap For DV570 Flush Cill.**	**10**	**Pairs**	**DV570**	MF	
					SA	
					KL	
					HP	
					SSC	
					SMC	
					PC	
					W	✓
					Z	✓

T-BARS
ACVG65=2.5mm
ACVG66=3.0mm
ACVL150=4.0mm

Screw (Grub)

MF = Mill Finish
SA = Silver Anodised
KL = Basic Colour
HP = Special Colour
SSC = Smooth Satin Chrome
SMC = Smokey Chrome
PC = Polished Chrome
W = White
Z = Black

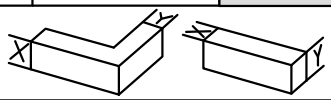

Visofold 6000

ACCESSORIES : PHOTOS & DRAWINGS

Image	Part Code	Pack	Unit	Application	Colour
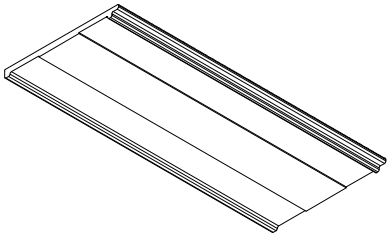	**ACDV571** **Bridge Packer**	12	Pack	DV620 DV622	MF SA KL HP SSC SMC PC W Z ✓
					MF SA KL HP SSC SMC PC W Z
					MF SA KL HP SSC SMC PC W Z
					MF SA KL HP SSC SMC PC W Z
					MF SA KL HP SSC SMC PC W Z

T-BARS
ACVG65=2.5mm
ACVG66=3.0mm
ACVL150=4.0mm

Screw (Grub)

MF = **Mill Finish**
SA = **Silver Anodised**
KL = **Basic Colour**
HP = **Special Colour**
SSC = **Smooth Satin Chrome**
SMC = **Smokey Chrome**
PC = **Polished Chrome**
W = **White**
Z = **Black**

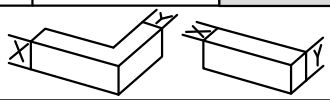

Image	Part Code	Pack	Unit	Application	Colour
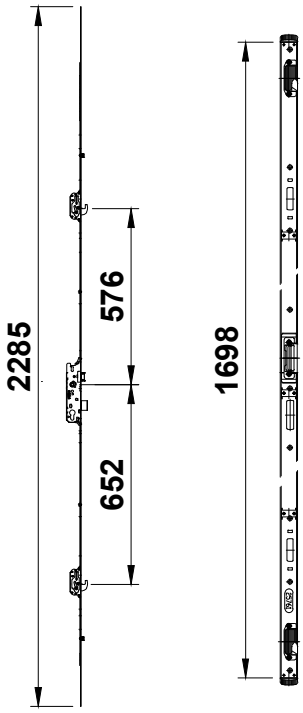	**ACDV576** **25mm Back Set Multi Point Lock Kit with LEFT HAND Full Height Keep.** **Viewed Externally** 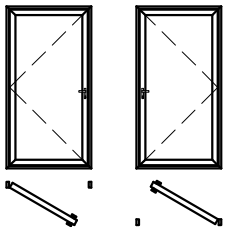 **Left Hand Open Out** **Right Hand Open In**	1	Each	**DV620** **DV622** **PCX44** **PCX38** **DV645** **ACDV251** **ACET480** **ACET484** **ACET485** **ACET486** **ACET487** **ACET488** **ACDV258**	MF ✓ SA KL HP SSC SMC PC W Z
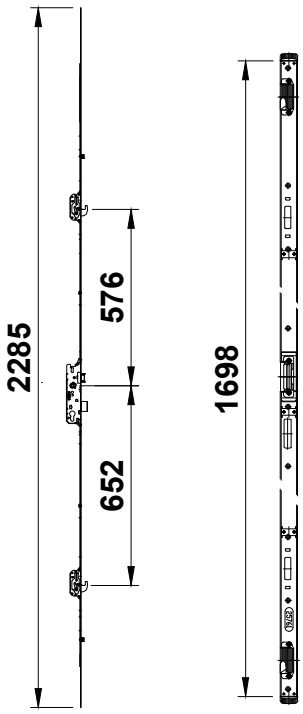	**ACDV577** **25mm Back Set Multi Point Lock Kit with RIGHT HAND Full Height Keep** **Viewed Externally** 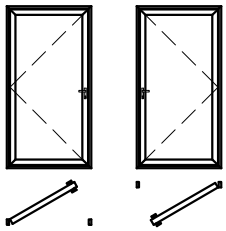 **Left Hand Open In** **Right Hand Open Out**	1	Each	**DV620** **DV622** **PCX44** **PCX38** **DV645** **ACDV251** **ACET480** **ACET484** **ACET485** **ACET486** **ACET487** **ACET488** **ACDV258**	MF ✓ SA KL HP SSC SMC PC W Z

T-BARS
ACVG65=2.5mm
ACVG66=3.0mm
ACVL150=4.0mm

Screw (Grub)

MF = Mill Finish
SA = Silver Anodised
KL = Basic Colour
HP = Special Colour
SSC = Smooth Satin Chrome
SMC = Smokey Chrome
PC = Polished Chrome
W = White
Z = Black

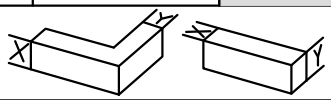

Image	Part Code	Pack	Unit	Application	Colour
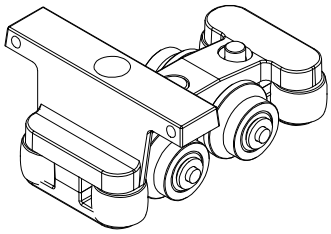	**ACDV580** **Bottom Roller**	1	Each	DV38 ACDV590	MF SA KL HP SSC SMC PC W Z ✓
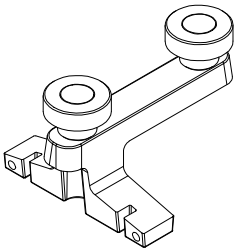	**ACDV581** **Top Guide**	1	Each	DV38 ACDV590	MF SA KL HP SSC SMC PC W Z ✓
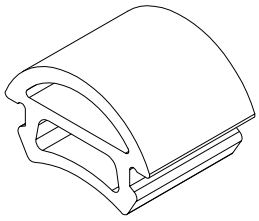	**ACDV582** **Outer Frame Gasket**	100	m	DV620 DV622	MF SA KL HP SSC SMC PC W Z ✓
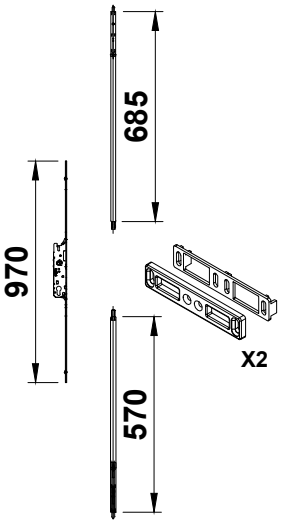	**ACDV586** **25mm Back Set Secondary Door Lock Kit** **Includes:** **1 x Bottom Shoot Bolt** **1 x Top Shoot Bolt** **2 x Keeps with Underplates** **See Page E11 for height limitations**	1	Each	DV620 DV622 PCX44 DV640 ACDV251 ACET480 ACET484 ACET485 ACET486 ACET487 ACET488 ACDV258	MF ✓ SA KL HP SSC SMC PC W Z

T-BARS
ACVG65=2.5mm
ACVG66=3.0mm
ACVL150=4.0mm

Screw (Grub)

MF	= Mill Finish	W	= White
SA	= Silver Anodised	Z	= Black
KL	= Basic Colour		
HP	= Special Colour		
SSC	= Smooth Satin Chrome		
SMC	= Smokey Chrome		
PC	= Polished Chrome		

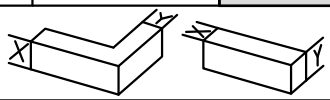

Image	Part Code	Pack	Unit	Application	Colour	
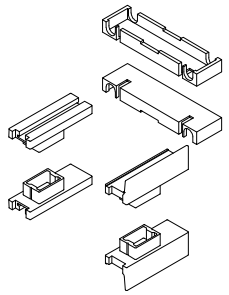	**ACDV590** **Top & Bottom Roller Kit**	**10**	**Pack**	**DV38** **ACDV580** **ACDV581**	MF SA KL HP SSC SMC PC W Z	 ✓
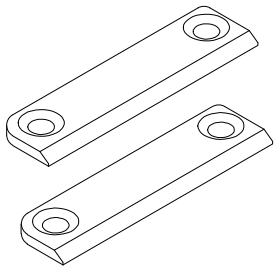	**ACDV595** **Shootbolt Keeps**	**20**	**Pack**	**DV545N**	MF SA KL HP SSC SMC PC W Z	
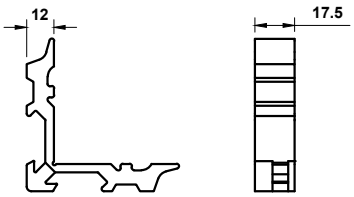	**ACDV620** **Mechanical Corner Cleat**	**24**	**Pack**	**DV620** **DV622**	MF SA KL HP SSC SMC PC W Z	✓
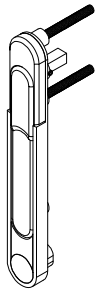	**ACDV624** **Non-Locking Pop Up Handle**	**1**	**Each**	**DV620** **DV622**	MF SA KL HP SSC SMC PC W Z	 ✓ ✓ ✓ ✓
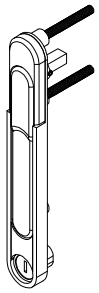	**ACDV625** **Locking Pop Up Handle**	**1**	**Each**	**DV620** **DV622**	MF SA KL HP SSC SMC PC W Z	 ✓ ✓ ✓ ✓

T-BARS
ACVG65=2.5mm
ACVG66=3.0mm
ACVL150=4.0mm

Screw (Grub)

MF = Mill Finish
SA = Silver Anodised
KL = Basic Colour
HP = Special Colour
SSC = Smooth Satin Chrome
SMC = Smokey Chrome
PC = Polished Chrome
W = White
Z = Black

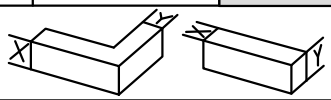

Image	Part Code	Pack	Unit	Application	Colour	
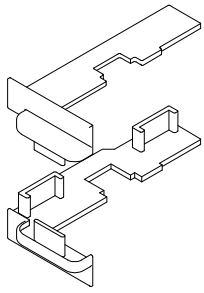	**ACDV640** **Primary Door End Cap**	1	Pair	DV640 DV662	MF SA KL HP SSC SMC PC W Z	 ✓
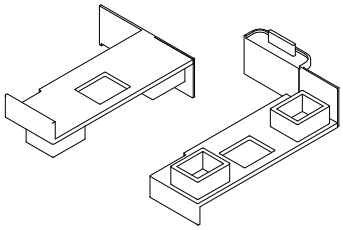	**ACDV642** **Secondary Door End Cap**	1	Pair	DV645 DV662	MF SA KL HP SSC SMC PC W Z	 ✓
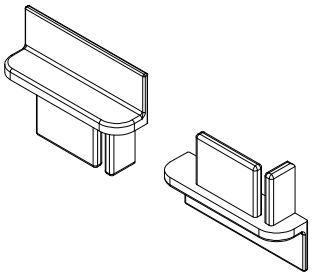	**ACDV643** **Rebate Adapter End Cap**	1	Pair	DV662	MF SA KL HP SSC SMC PC W Z	 ✓
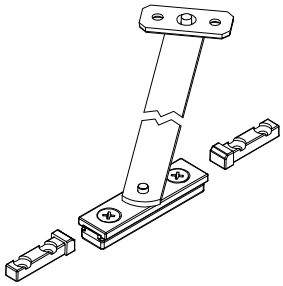	**ACDV658** **Door Stop Restrictor**	1	Each	DV620 DV622	MF SA KL HP SSC SMC PC W Z	✓
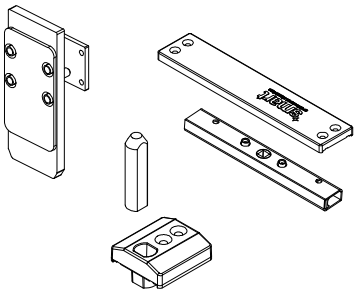	**ACDV663** **Shoot Bolt Kit With Gear Box and PVC Cover** **(Includes Shoot Bolt Rods)**	1	Pack	DV620 DV622 ACDV226 ACDV624 ACDV625	MF SA KL HP SSC SMC PC W Z	 ✓

T-BARS
ACVG65=2.5mm
ACVG66=3.0mm
ACVL150=4.0mm

Screw (Grub)

MF	= Mill Finish	W	= White
SA	= Silver Anodised	Z	= Black
KL	= Basic Colour		
HP	= Special Colour		
SSC	= Smooth Satin Chrome		
SMC	= Smokey Chrome		
PC	= Polished Chrome		

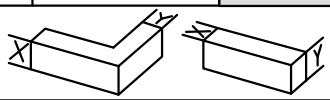

Visofold 6000

ACCESSORIES : PHOTOS & DRAWINGS

Image	Part Code	Pack	Unit	Application	Colour
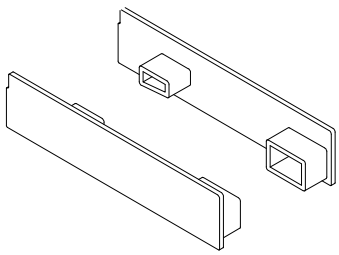	**ACDV670** **PVC End Cap For ETC670 Flush Cill.**	**10**	**Pairs**	**DV670**	MF SA KL HP SSC SMC PC W ✓ Z ✓
					MF SA KL HP SSC SMC PC W Z
					MF SA KL HP SSC SMC PC W Z
					MF SA KL HP SSC SMC PC W Z
					MF SA KL HP SSC SMC PC W Z

T-BARS
ACVG65=2.5mm
ACVG66=3.0mm
ACVL150=4.0mm

Screw (Grub)

MF = **Mill Finish**
SA = **Silver Anodised**
KL = **Basic Colour**
HP = **Special Colour**
SSC = **Smooth Satin Chrome**
SMC = **Smokey Chrome**
PC = **Polished Chrome**
W = **White**
Z = **Black**

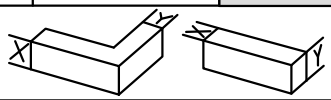

ISSUED : JANUARY 2018

Image	Part Code	Pack	Unit	Application	Colour
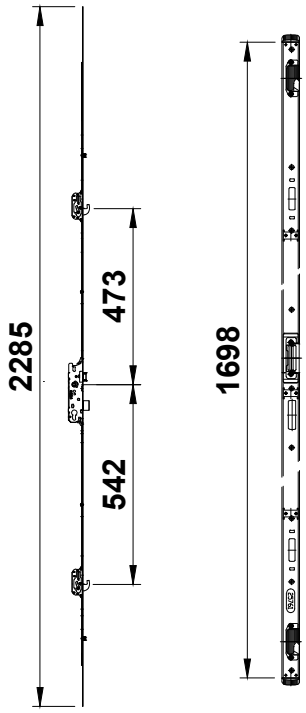	**ACDV676** **Short 25mm Back Set Multi Point Lock Kit with LEFT HAND Full Height Keep.** **Viewed Externally** 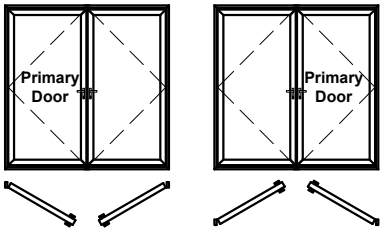 **Left Hand Open Out** **Right Hand Open In**	1	Each	**DV620** **DV622** **PCX44** **PCX38** **DV645** **ACDV251** **ACET480** **ACET484** **ACET485** **ACET486** **ACET487** **ACET488** **ACDV258**	MF ✓ SA KL HP SSC SMC PC W Z
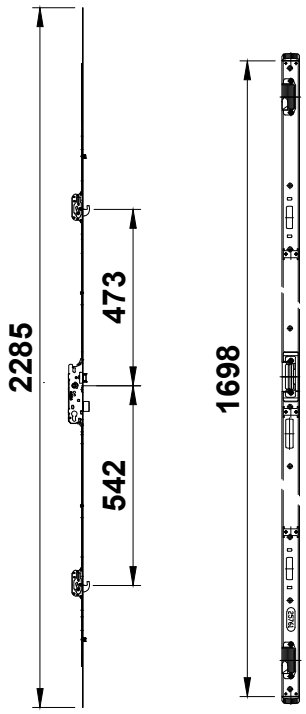	**ACDV677** **Short 25mm Back Set Multi Point Lock Kit with RIGHT HAND Full Height Keep** **Viewed Externally** 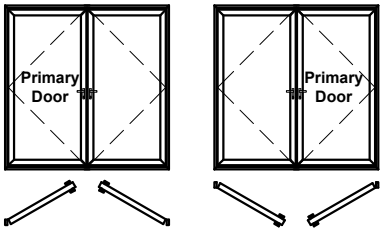 **Left Hand Open In** **Right Hand Open Out**	1	Each	**DV620** **DV622** **PCX44** **PCX38** **DV645** **ACDV251** **ACET480** **ACET484** **ACET485** **ACET486** **ACET487** **ACET488** **ACDV258**	MF ✓ SA KL HP SSC SMC PC W Z

T-BARS
ACVG65=2.5mm
ACVG66=3.0mm
ACVL150=4.0mm

Screw (Grub)

MF	**= Mill Finish**	**W**	**= White**
SA	**= Silver Anodised**	**Z**	**= Black**
KL	**= Basic Colour**		
HP	**= Special Colour**		
SSC	**= Smooth Satin Chrome**		
SMC	**= Smokey Chrome**		
PC	**= Polished Chrome**		

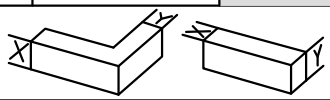

Image	Part Code	Pack	Unit	Application	Colour
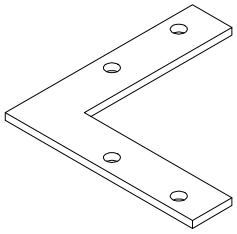	**ACDV682** **90° Fixing Bracket For Corner Assembly**	**4**	**Pack**	**DV610** **DV612**	MF ✓ SA KL HP SSC SMC PC W Z
	**ACDV737** **Bottom Shoot Bolt**	**1**	**Each**	**DV620** **DV622**	MF ✓ SA KL HP SSC SMC PC W Z
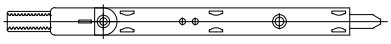	**ACDV738** **Top Shoot Bolt**	**1**	**Each**	**DV620** **DV622**	MF ✓ SA KL HP SSC SMC PC W Z
	**ACDV742** **200mm Extension For ACDV738**	**1**	**Each**	**DV620** **DV622**	MF ✓ SA KL HP SSC SMC PC W Z
	**ACDV744** **400mm Extension For ACDV738**	**1**	**Each**	**DV620** **DV622**	MF ✓ SA KL HP SSC SMC PC W Z

T-BARS
ACVG65=2.5mm
ACVG66=3.0mm
ACVL150=4.0mm

Screw (Grub)

MF = Mill Finish
SA = Silver Anodised
KL = Basic Colour
HP = Special Colour
SSC = Smooth Satin Chrome
SMC = Smokey Chrome
PC = Polished Chrome
W = White
Z = Black

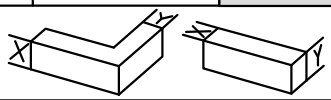

Image	Part Code	Pack	Unit	Application	Colour	
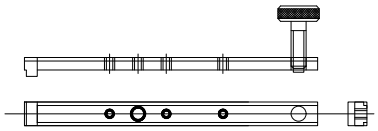	**ACDV902** **Drill Jig for ACDV566 & ACDV567**	**1**	**Each**	**ACDV566 ACDV567**	MF	
					SA	
					KL	
					HP	
					SSC	
					SMC	
					PC	
					W	
					Z	
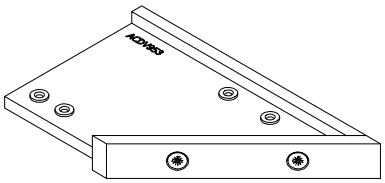	**ACDV953** **Corner Drill Jig For 90° Corner**	**1**	**Each**	**DV610 DV612**	MF	✓
					SA	
					KL	
					HP	
					SSC	
					SMC	
					PC	
					W	
					Z	
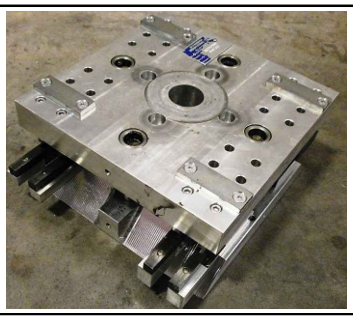	**ACDV955** **Punch tool. base unit: ACIP911 (supplied seperately)**	**1**	**Each**	**DV620 DV622 DV612 DV610**	MF	✓
					SA	
					KL	
					HP	
					SSC	
					SMC	
					PC	
					W	
					Z	
	**ACET060** **No. 7 x 1" csk s/s s/t Screw**	**100**	**Pack**		MF	
					SA	
					KL	
					HP	
					SSC	
					SMC	
					PC	
					W	
					Z	
	**ACET066** **No.7 x 38 s/s s/t csk Screw**	**100**	**Pack**		MF	
					SA	
					KL	
					HP	
					SSC	
					SMC	
					PC	
					W	
					Z	

T-BARS
ACVG65=2.5mm
ACVG66=3.0mm
ACVL150=4.0mm

Screw (Grub)

MF = Mill Finish
SA = Silver Anodised
KL = Basic Colour
HP = Special Colour
SSC = Smooth Satin Chrome
SMC = Smokey Chrome
PC = Polished Chrome
W = White
Z = Black

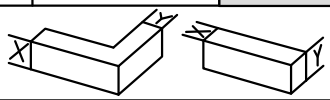

Image	Part Code	Pack	Unit	Application	Colour	
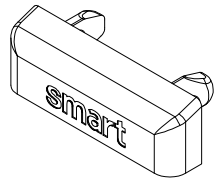	**ACET131** **Drainage Cap**	**100**	**Pack**	**DV610** **DV612**	MF SA KL HP SSC SMC PC W Z	 ✓ ✓
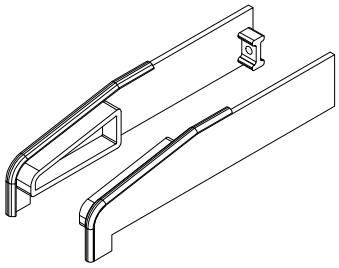	**ACET152** **PVC End Cap For ETC452 Cill.**	**10**	**Pairs**	**ETC452**	MF SA KL HP SSC SMC PC W Z	 ✓ ✓
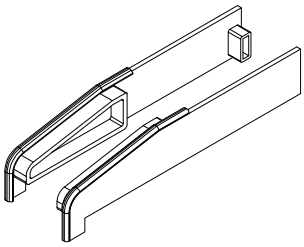	**ACET157** **PVC End Cap For ETC457 Cill.**	**10**	**Pairs**	**ETC457**	MF SA KL HP SSC SMC PC W Z	 ✓ ✓
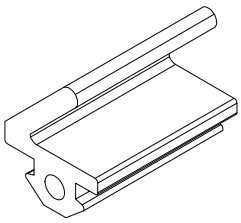	**ACET160** **Flipper Gasket**	**100**	**m**	**DV620** **DV622** **DV610** **DV612** **DV662**	MF SA KL HP SSC SMC PC W Z	 ✓
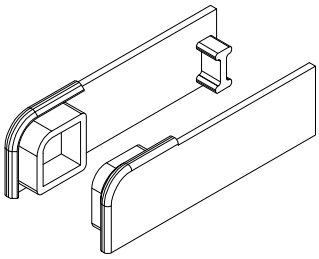	**ACET178** **PVC End Cap For ETC451 Cill.**	**10**	**Pairs**	**ETC451**	MF SA KL HP SSC SMC PC W Z	 ✓ ✓

T-BARS
ACVG65=2.5mm
ACVG66=3.0mm
ACVL150=4.0mm

Screw (Grub)

MF = Mill Finish
SA = Silver Anodised
KL = Basic Colour
HP = Special Colour
SSC = Smooth Satin Chrome
SMC = Smokey Chrome
PC = Polished Chrome
W = White
Z = Black

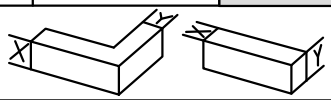

Image	Part Code	Pack	Unit	Application	Colour	
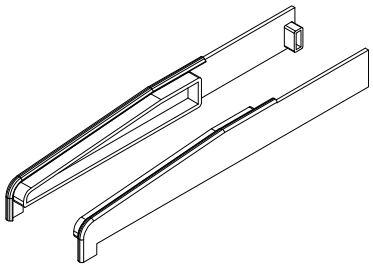	**ACET179** **PVC End Cap For ETC479 Cill.**	**10**	**Pairs**	**ETC479**	MF	
					SA	
					KL	
					HP	
					SSC	
					SMC	
					PC	
					W	✓
					Z	✓
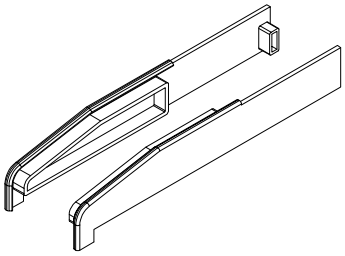	**ACET258** **PVC End Cap For ETC458 Cill.**	**10**	**Pairs**	**ETC458**	MF	
					SA	
					KL	
					HP	
					SSC	
					SMC	
					PC	
					W	✓
					Z	✓
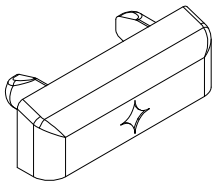	**ACET431** **Colour Match Drainage Cap**	**100**	**Pack**	**DV610** **DV612**	MF	
					SA	
					KL	✓
					HP	✓
					SSC	
					SMC	
					PC	
					W	✓
					Z	✓
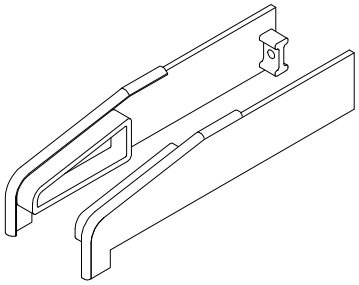	**ACET452** **Cast Aluminium End Cap For ETC452 Cill.**	**10**	**Pairs**	**ETC452**	MF	✓
					SA	
					KL	✓
					HP	✓
					SSC	
					SMC	
					PC	
					W	✓
					Z	✓
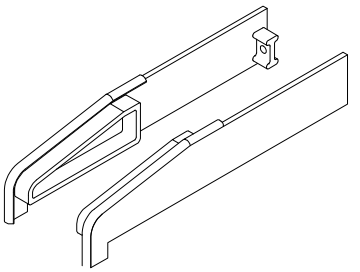	**ACET457** **Cast Aluminium End Cap For ETC457 cill.**	**10**	**Pairs**	**ETC457**	MF	✓
					SA	
					KL	✓
					HP	✓
					SSC	
					SMC	
					PC	
					W	✓
					Z	✓

T-BARS
ACVG65=2.5mm
ACVG66=3.0mm
ACVL150=4.0mm

Screw (Grub)

MF = Mill Finish
SA = Silver Anodised
KL = Basic Colour
HP = Special Colour
SSC = Smooth Satin Chrome
SMC = Smokey Chrome
PC = Polished Chrome
W = White
Z = Black

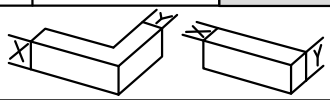

Image	Part Code	Pack	Unit	Application	Colour	
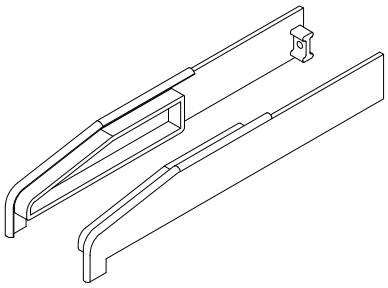	**ACET458** **Cast Aluminium End Cap For ETC458 Cill.**	**10**	**Pairs**	**ETC458**	MF	✓
					SA	
					KL	✓
					HP	✓
					SSC	
					SMC	
					PC	
					W	✓
					Z	✓
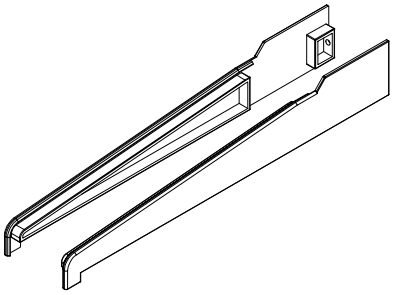	**ACET477** **Cast Aluminium End Cap For ETC458 Cill.**	**10**	**Pairs**	**ETC477**	MF	✓
					SA	
					KL	✓
					HP	✓
					SSC	
					SMC	
					PC	
					W	✓
					Z	✓
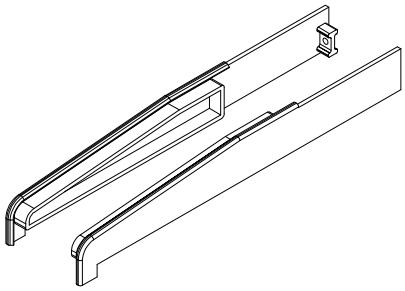	**ACET479** **Cast Aluminium End Cap For ETC479 Cill.**	**10**	**Pairs**	**ETC479**	MF	✓
					SA	
					KL	✓
					HP	✓
					SSC	
					SMC	
					PC	
					W	✓
					Z	✓
	**ACET480** **PAS24 Standard Lever/Lever Handle**	**1**	**Pair**	**DV620** **DV622**	MF	
					SA	
					KL	✓
					HP	✓
					SSC	✓
					SMC	✓
					PC	✓
					W	✓
					Z	✓
	**ACET484** **Standard Lever/Lever Handle. (Includes Fixings and Spindle).**	**1**	**Pair**	**DV620** **DV622**	MF	
					SA	
					KL	✓
					HP	✓
					SSC	✓
					SMC	✓
					PC	✓
					W	✓
					Z	✓

T-BARS
ACVG65=2.5mm
ACVG66=3.0mm
ACVL150=4.0mm

Screw (Grub)

MF = Mill Finish
SA = Silver Anodised
KL = Basic Colour
HP = Special Colour
SSC = Smooth Satin Chrome
SMC = Smokey Chrome
PC = Polished Chrome
W = White
Z = Black

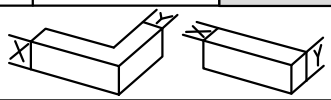

Image	Part Code	Pack	Unit	Application	Colour	
	**ACET486** Swept Lever/Lever Handle. (Includes Fixings and Spindle).	1	Pair	DV620 DV622	MF SA KL HP SSC SMC PC W Z	 ✓ ✓ ✓ ✓ ✓ ✓ ✓
	**ACET487** Oval Lever/Lever Handle. (Includes Fixings and Spindle).	1	Pair	DV620 DV622	MF SA KL HP SSC SMC PC W Z	 ✓ ✓ ✓ ✓ ✓ ✓ ✓
	**ACET488** Round Lever/Lever Handle. (Includes Fixings and Spindle).	1	Pair	DV620 DV622	MF SA KL HP SSC SMC PC W Z	 ✓ ✓ ✓ ✓ ✓ ✓ ✓
	**ACET490** 4.3 X 16mm Polyamide Screws	100	Pack		MF SA KL HP SSC SMC PC W Z	
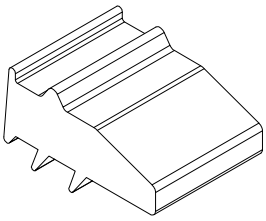	**ACET840** 5mm Low Line Wedge Gasket	150	m	ETC270 ETC272 ETC267 ETC667	MF SA KL HP SSC SMC PC W Z	 ✓

T-BARS
ACVG65=2.5mm
ACVG66=3.0mm
ACVL150=4.0mm

Screw (Grub)

MF	= Mill Finish	W	= White
SA	= Silver Anodised	Z	= Black
KL	= Basic Colour		
HP	= Special Colour		
SSC	= Smooth Satin Chrome		
SMC	= Smokey Chrome		
PC	= Polished Chrome		

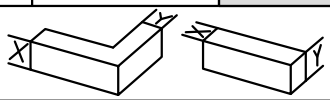

Image	Part Code	Pack	Unit	Application	Colour	
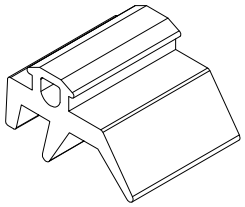	**ACET841** **4mm Low Line External Gasket**	**200**	**m**	**DV620** **DV622**	MF SA KL HP SSC SMC PC W Z	 ✓
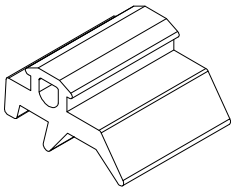	**ACET842** **3mm Low Line External Gasket**	**200**	**m**	**DV620** **DV622**	MF SA KL HP SSC SMC PC W Z	 ✓
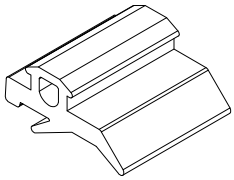	**ACET843** **2mm Low Line External Gasket**	**200**	**m**	**DV620** **DV622**	MF SA KL HP SSC SMC PC W Z	 ✓
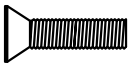	**ACIM414** **M4 mc.Screw x 16mm c/s**	**100**	**Pack**		MF SA KL HP SSC SMC PC W Z	✓
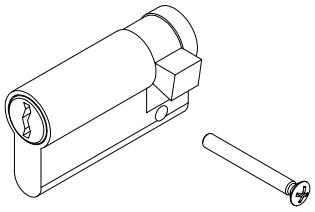	**ACMX01604** **45 Half Cylinder.** **For keyed alike order** **ACMX01604SL**	**1**	**Pack**	**ACDV251**	MF SA KL HP SSC SMC PC W Z	✓

T-BARS
ACVG65=2.5mm
ACVG66=3.0mm
ACVL150=4.0mm

Screw (Grub)

MF	**= Mill Finish**	**W**	**= White**
SA	**= Silver Anodised**	**Z**	**= Black**
KL	**= Basic Colour**		
HP	**= Special Colour**		
SSC	**= Smooth Satin Chrome**		
SMC	**= Smokey Chrome**		
PC	**= Polished Chrome**		

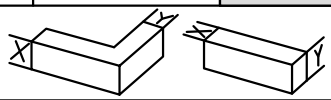

Image	Part Code	Pack	Unit	Application	Colour	
	**ACSG071** **M4 X 40mm din 965 Screw**	**100**	**Pack**		MF	✓
					SA	
					KL	
					HP	
					SSC	
					SMC	
					PC	
					W	
					Z	
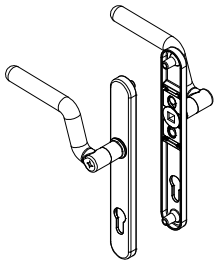	**ACSM006L** **Cranked Back to Back Handle. (Includes Fixing Kit)**	**1**	**Pair**	**DV620 DV622**	MF	✓
					SA	
					KL	✓
					HP	✓
					SSC	
					SMC	
					PC	
					W	✓
					Z	✓
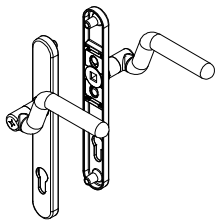	**ACSM006R** **Cranked Back to Back Handle. (Includes Fixing Kit)**	**1**	**Pair**	**DV620 DV622**	MF	✓
					SA	
					KL	✓
					HP	✓
					SSC	
					SMC	
					PC	
					W	✓
					Z	✓
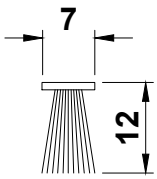	**ACSR011** **Brush Pile**	**100**	**m**	**DV62**	MF	
					SA	
					KL	
					HP	
					SSC	
					SMC	
					PC	
					W	
					Z	✓
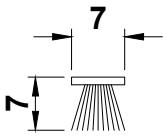	**ACSR012A** **Brush Pile**	**100**	**m**	**ACDV590**	MF	
					SA	
					KL	
					HP	
					SSC	
					SMC	
					PC	
					W	
					Z	✓

T-BARS
ACVG65=2.5mm
ACVG66=3.0mm
ACVL150=4.0mm

Screw (Grub)

MF	**= Mill Finish**	**W**	**= White**
SA	**= Silver Anodised**	**Z**	**= Black**
KL	**= Basic Colour**		
HP	**= Special Colour**		
SSC	**= Smooth Satin Chrome**		
SMC	**= Smokey Chrome**		
PC	**= Polished Chrome**		

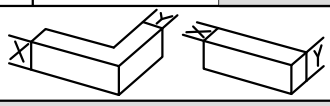

Image	Part Code	Pack	Unit	Application	Colour	
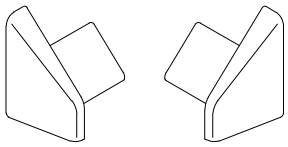	**ACVL059** **End Caps for VL72**	**100**	**Pack**		MF	
					SA	
					KL	
					HP	
					SSC	
					SMC	
					PC	
					W	
					Z	
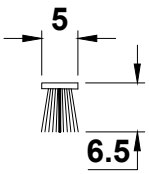	**ACVS034** **Brush Pile With Fin**	**100**	**m**	**DV610** **DV612**	MF	
					SA	
					KL	
					HP	
					SSC	
					SMC	
					PC	
					W	
					Z	✓
	**MUA025SSZ** **No.6 x 1" csk Pozi SS Screw**	**100**	**Pack**		MF	✓
					SA	
					KL	
					HP	
					SSC	
					SMC	
					PC	
					W	
					Z	
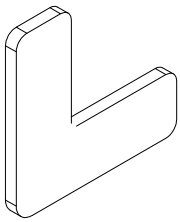	**WCA106** **Stainless Steel Chevron.**	**50**	**Pack**	**DV620** **DV622** **DV610** **DV612**	MF	✓
					SA	
					KL	
					HP	
					SSC	
					SMC	
					PC	
					W	
					Z	
					MF	
					SA	
					KL	
					HP	
					SSC	
					SMC	
					PC	
					W	
					Z	

T-BARS
ACVG65=2.5mm
ACVG66=3.0mm
ACVL150=4.0mm

Screw (Grub)

MF	**= Mill Finish**	**W**	**= White**
SA	**= Silver Anodised**	**Z**	**= Black**
KL	**= Basic Colour**		
HP	**= Special Colour**		
SSC	**= Smooth Satin Chrome**		
SMC	**= Smokey Chrome**		
PC	**= Polished Chrome**		

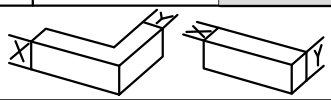

Image	Part Code	Pack	Unit	Application	Colour
	**ACMX09700** **Alu. Polish**	1	Each		MF SA KL HP SSC SMC W Z PC
	**ACMX09761** **Maxi Gloss**	1	Each		MF SA KL HP SSC SMC W Z PC
	**ACMX09762** **Alu. Bright**	1	Each		MF SA KL HP SSC SMC W Z PC
	**ACMX09763** **Teflon Spray**	1	Each		MF SA KL HP SSC SMC W Z PC
	**ACMX09764** **Maxi Clean**	1	Each		MF SA KL HP SSC SMC W Z PC

T-BARS
ACVG65=2.5mm
ACVG66=3.0mm
ACVL150=4.0mm

Screw (Grub)

MF = Mill Finish
SA = Silver Anodised
KL = Basic Colour
HP = Special Colour
SSC = Smooth Satin Chrome
SMC = Smokey Chrome
PC = Polished Chrome
W = White
Z = Black

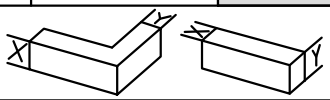

Visofold 6000

STANDARD ACCESSORIES

Image	Part Code	Pack	Unit	Application	Colour
	**ACMX09765** **Alu. Cleaner**	1	Each		MF SA KL HP SSC SMC W Z PC
	**ACMX09770** **Roll & Wrap 100mm**	1	Each		MF SA KL HP SSC SMC W Z PC
	**ACMX09775** **Grip Handwrap**	1	Each		MF SA KL HP SSC SMC W Z PC
	**ACMX09801** **Protective Tape 50mm**	1	Each		MF SA KL HP SSC SMC W Z PC
	**ACMX09802** **Protective Tape 70mm**	1	Each		MF SA KL HP SSC SMC W Z PC

T-BARS
ACVG65=2.5mm
ACVG66=3.0mm
ACVL150=4.0mm

Screw (Grub)

MF = Mill Finish
SA = Silver Anodised
KL = Basic Colour
HP = Special Colour
SSC = Smooth Satin Chrome
SMC = Smokey Chrome
PC = Polished Chrome
W = White
Z = Black

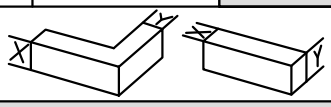

ISSUED : JANUARY 2018

Visofold 6000

STANDARD ACCESSORIES

Image	Part Code	Pack	Unit	Application	Colour	
	**ACMX09803** **Protective Tape 100mm**	1	Each		MF	
					SA	
					KL	
					HP	
					SSC	
					SMC	
					W	
					Z	
					PC	
	**ACMX09830** **Rubber Sealant**	1	Each		MF	
					SA	
					KL	
					HP	
					SSC	
					SMC	
					W	
					Z	
					PC	
	**ACSIL04** **Sealing Glue** **Order with suffix of KL colour (eg.ACSIL04KL005) or BL=Black/WP=White/ CL=Clear**	1	Each		MF	
					SA	
					KL	✓
					HP	
					SSC	
					SMC	
					W	✓
					Z	✓
					PC	
	**ACSIL08** **Silicon Gun**	1	Each		MF	
					SA	
					KL	
					HP	
					SSC	
					SMC	
					W	
					Z	
					PC	
	**ACSIL013** **Glue for Mitre**	1	Each		MF	
					SA	
					KL	
					HP	
					SSC	
					SMC	
					W	
					Z	
					PC	

T-BARS
ACVG65=2.5mm
ACVG66=3.0mm
ACVL150=4.0mm

Screw (Grub)

MF	= Mill Finish	W	= White
SA	= Silver Anodised	Z	= Black
KL	= Basic Colour		
HP	= Special Colour		
SSC	= Smooth Satin Chrome		
SMC	= Smokey Chrome		
PC	= Polished Chrome		

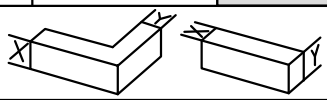

Visofold 6000

STANDARD ACCESSORIES

Image	Part Code	Pack	Unit	Application	Colour
	**ACSIL014** **Anti-Corrosion Coating**	1	Each		MF ✓ SA KL HP SSC SMC W Z PC
					MF SA KL HP SSC SMC W Z PC
					MF SA KL HP SSC SMC W Z PC
					MF SA KL HP SSC SMC W Z PC
					MF SA KL HP SSC SMC W Z PC

T-BARS
ACVG65=2.5mm
ACVG66=3.0mm
ACVL150=4.0mm

Screw (Grub)

MF = **Mill Finish**
SA = **Silver Anodised**
KL = **Basic Colour**
HP = **Special Colour**
SSC = **Smooth Satin Chrome**
SMC = **Smokey Chrome**
PC = **Polished Chrome**
W = **White**
Z = **Black**

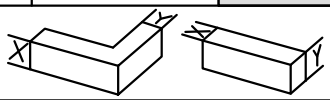

ISSUED : JANUARY 2018

Section C

Sections

Scale Elevations

Section C

Open Out Scale Elevations

Type 1

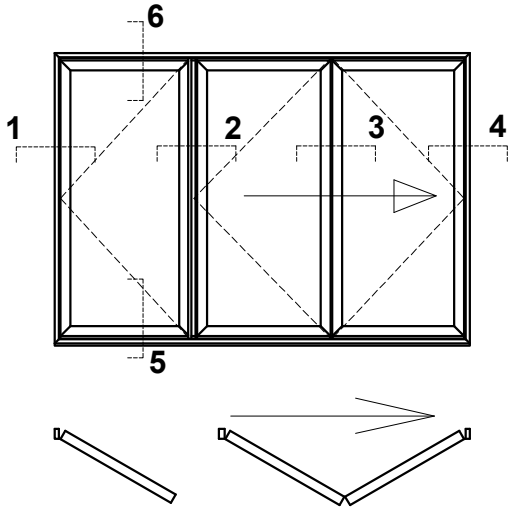

Type 2

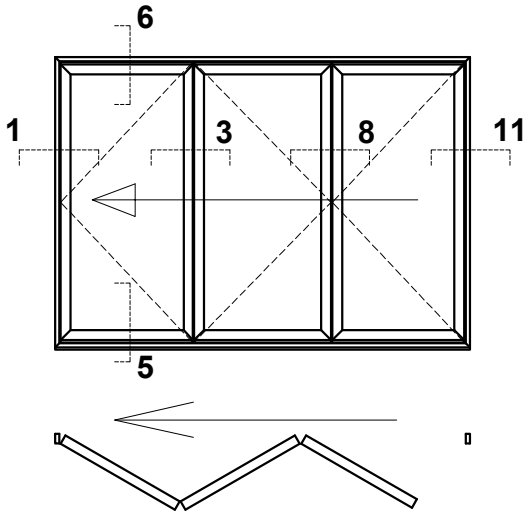

Type 3

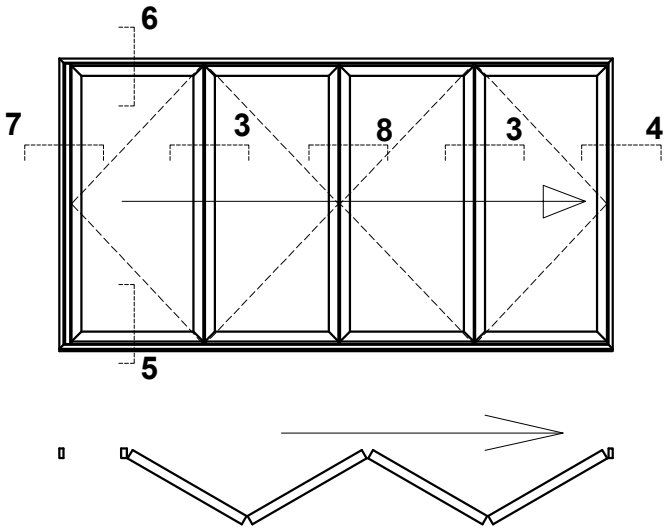

No External Access Or Traffic Door With This Design

Do Not Scale From This Drawing

Open Out Scale Elevations

Type 4

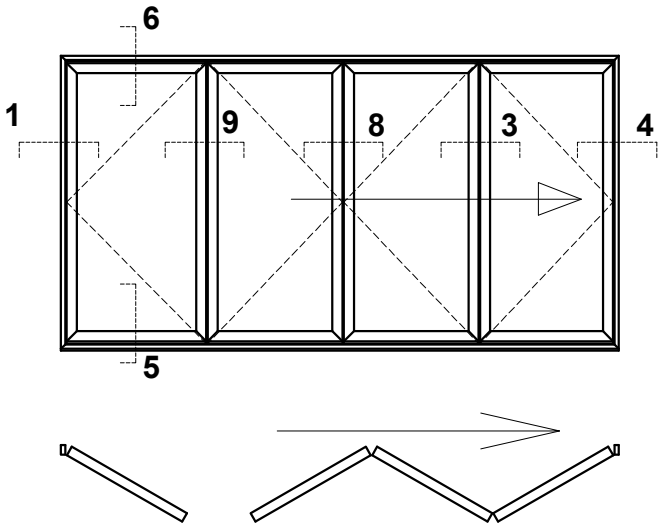

Type 5

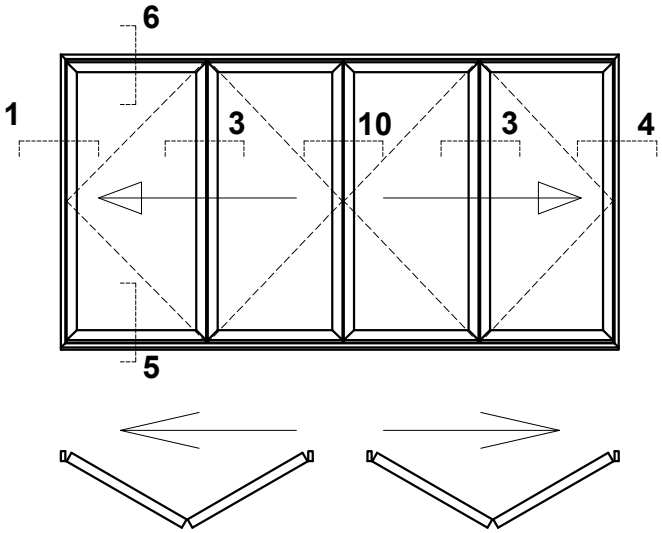

Do Not Scale From This Drawing

Open Out Scale Elevations

Type 6

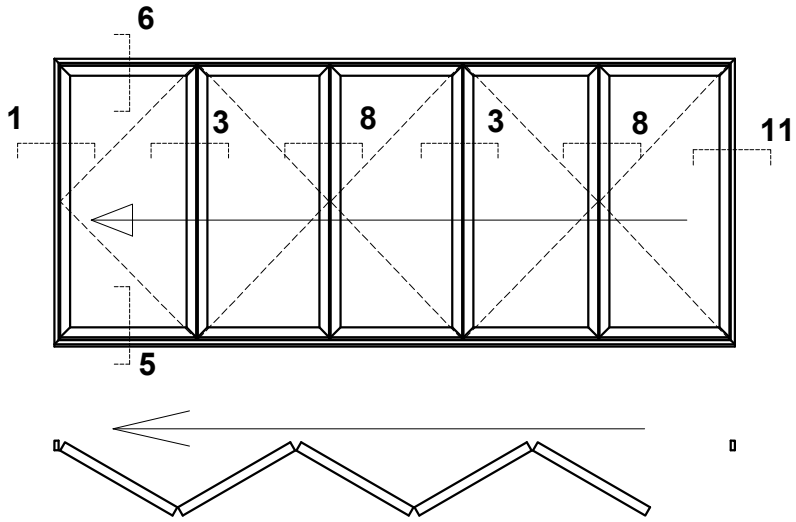

Type 7

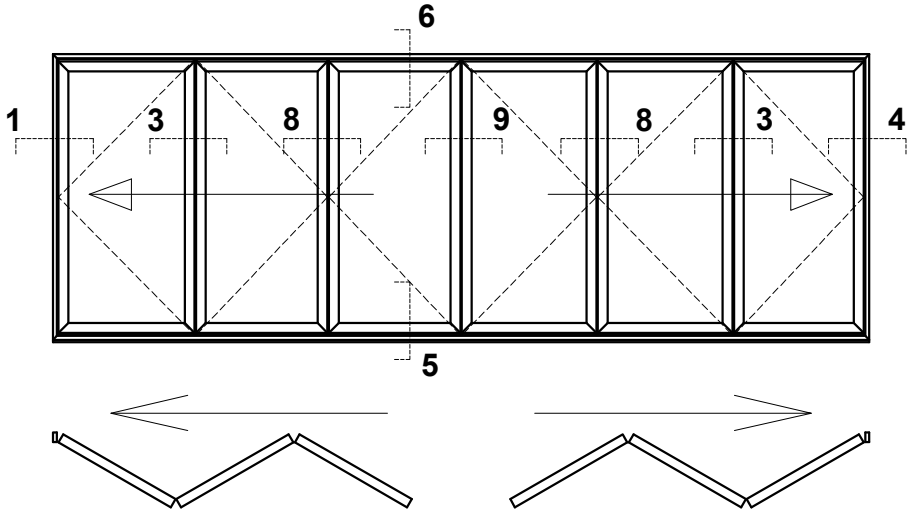

Do Not Scale From This Drawing

Open Out Scale Elevations

Single Swing Door

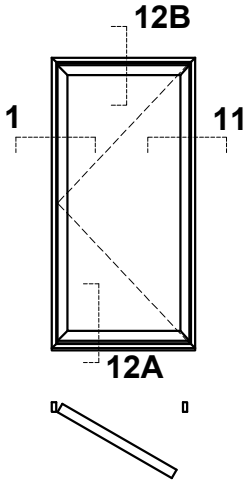

Double Swing Door

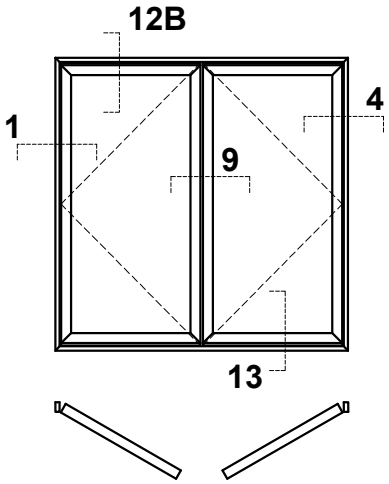

Double Slide Door

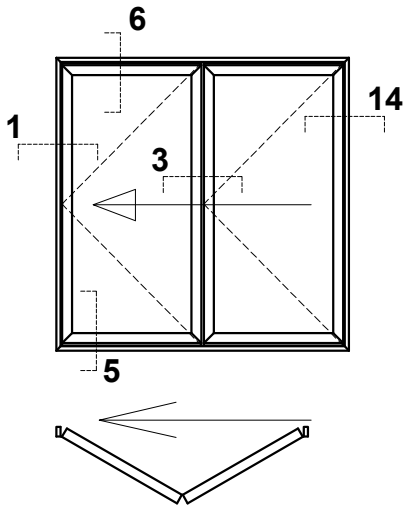

No External Access Or Traffic Door With This Design

3/2 Split Door

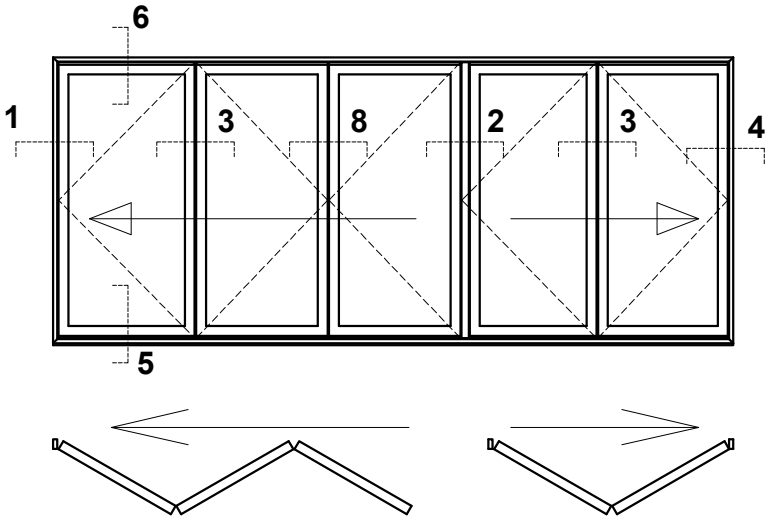

Do Not Scale From This Drawing

Open Out Scale Elevations

Removable 90° Corner Post Configurations

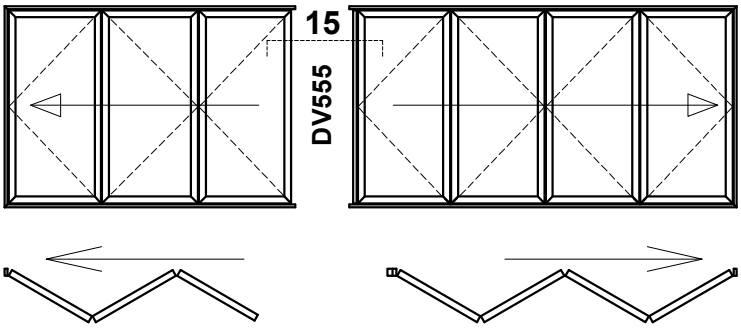

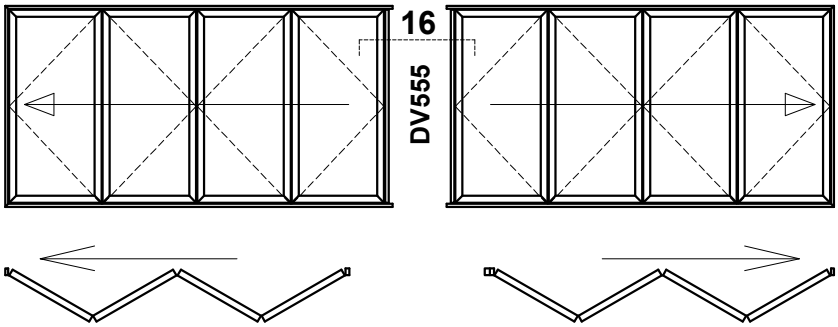

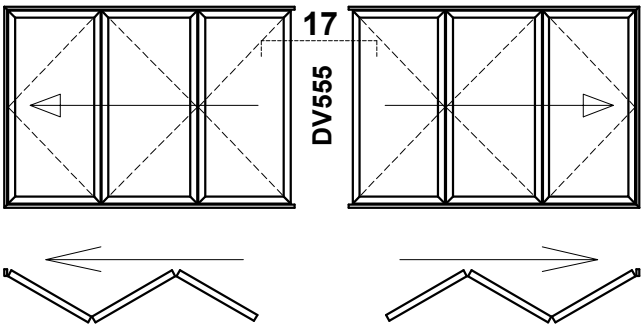

Do Not Scale From This Drawing

Open Out - Detail 1

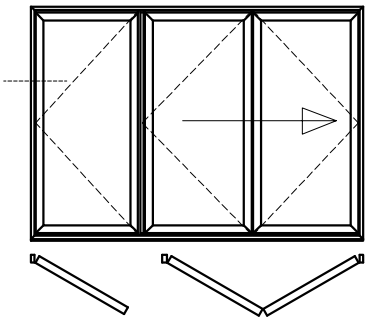

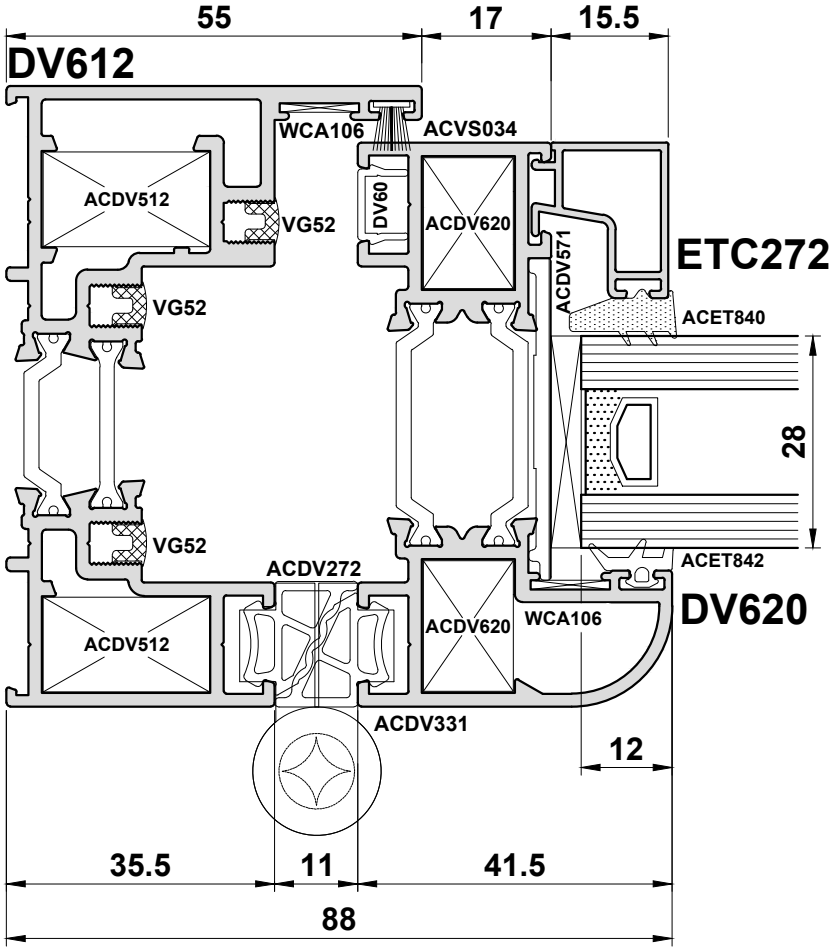

Do Not Scale From This Drawing

Open Out - Detail 2

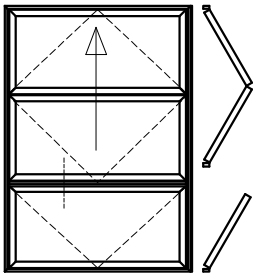

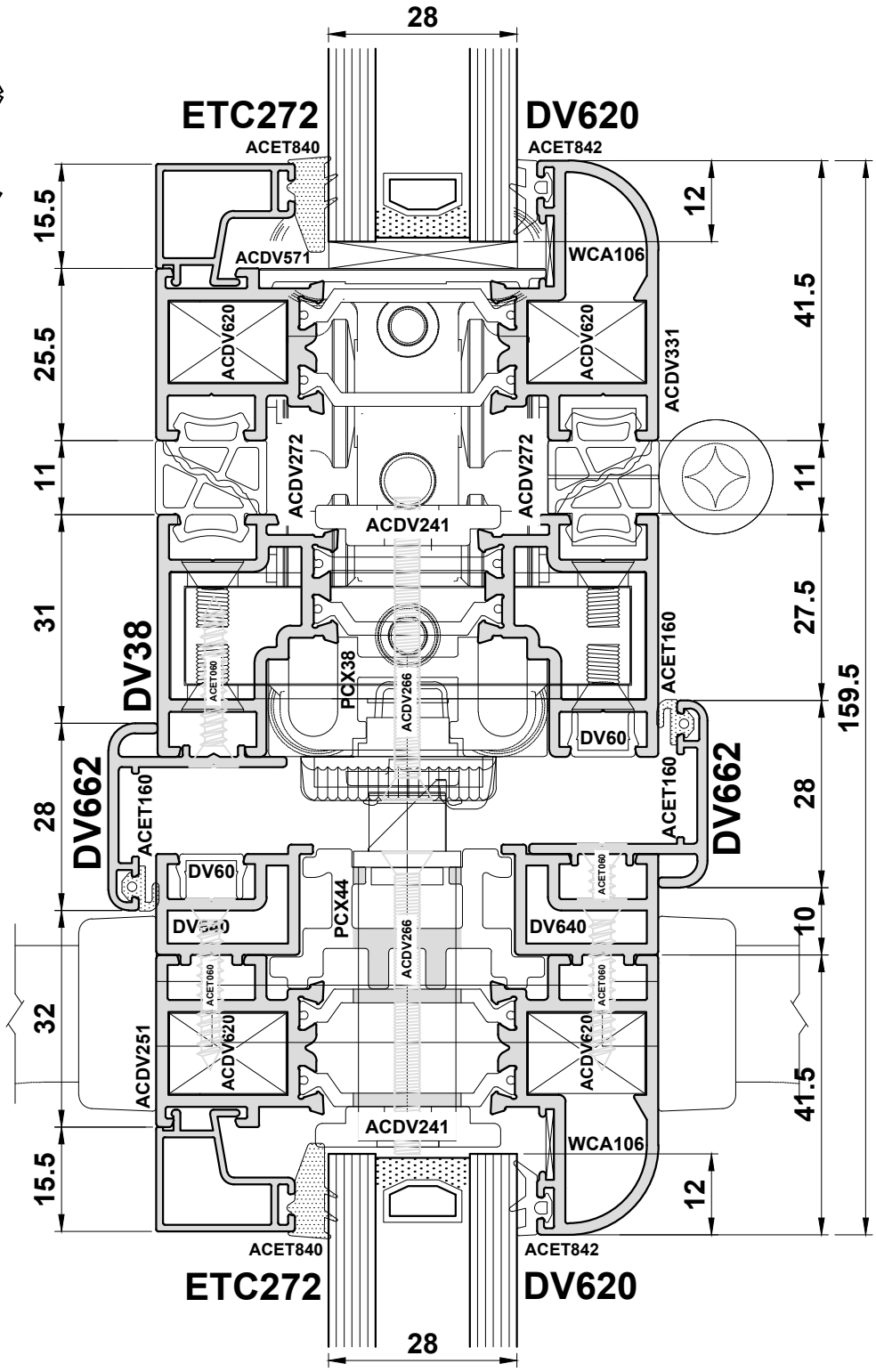

Do Not Scale From This Drawing

Open Out - Detail 3

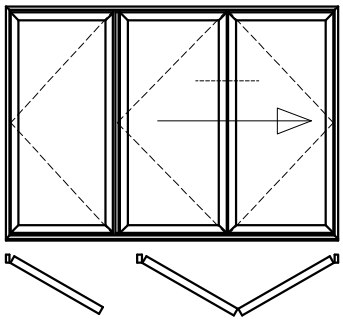

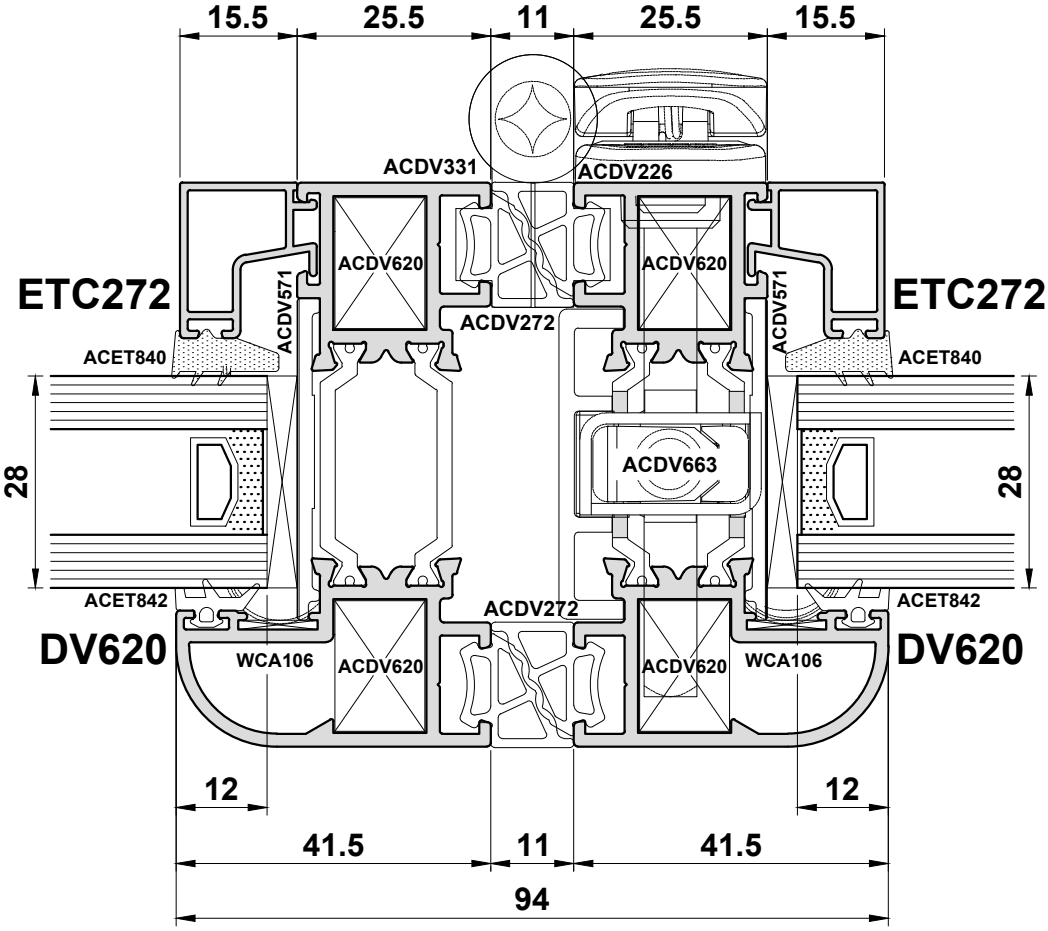

Do Not Scale From This Drawing

Open Out - Detail 4

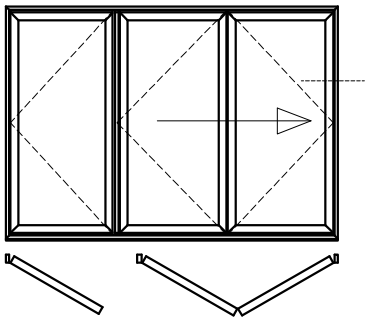

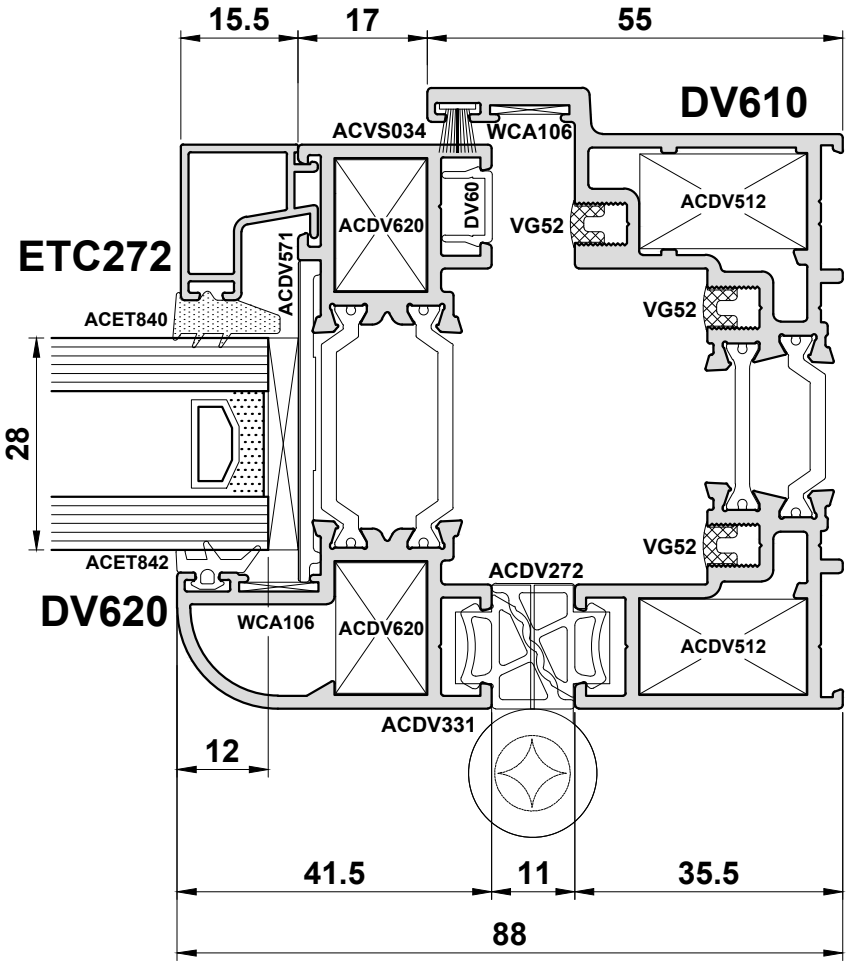

Do Not Scale From This Drawing

Open Out - Detail 5A

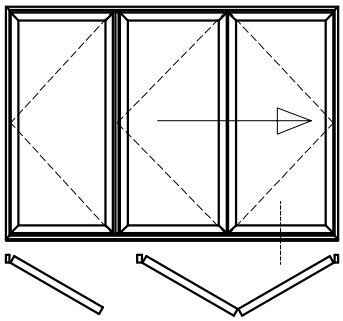

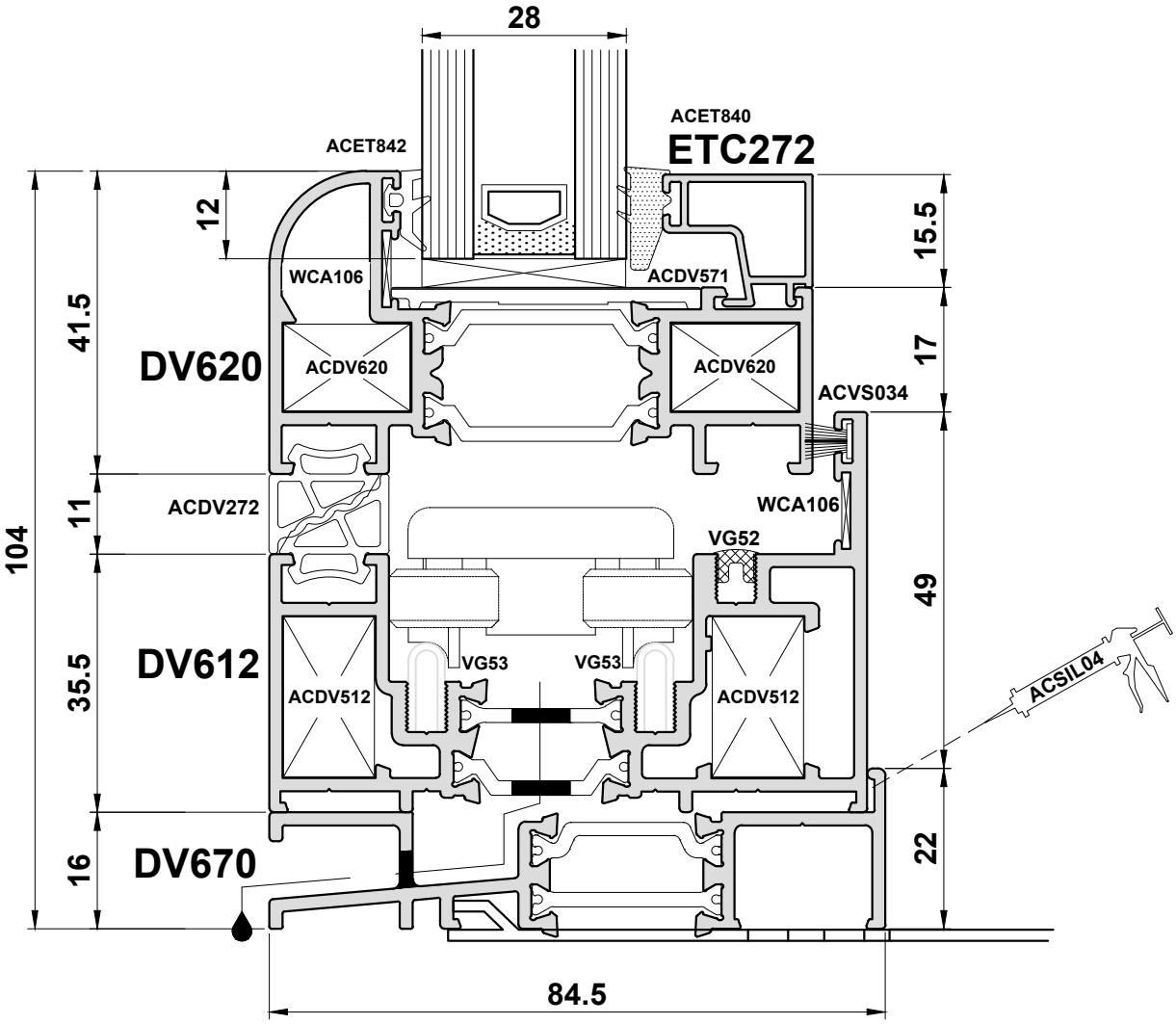

Do Not Scale From This Drawing

Open Out - Detail 5B

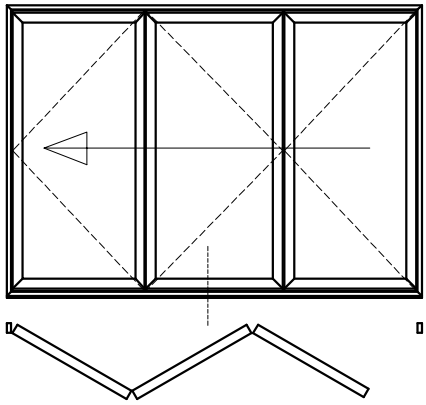

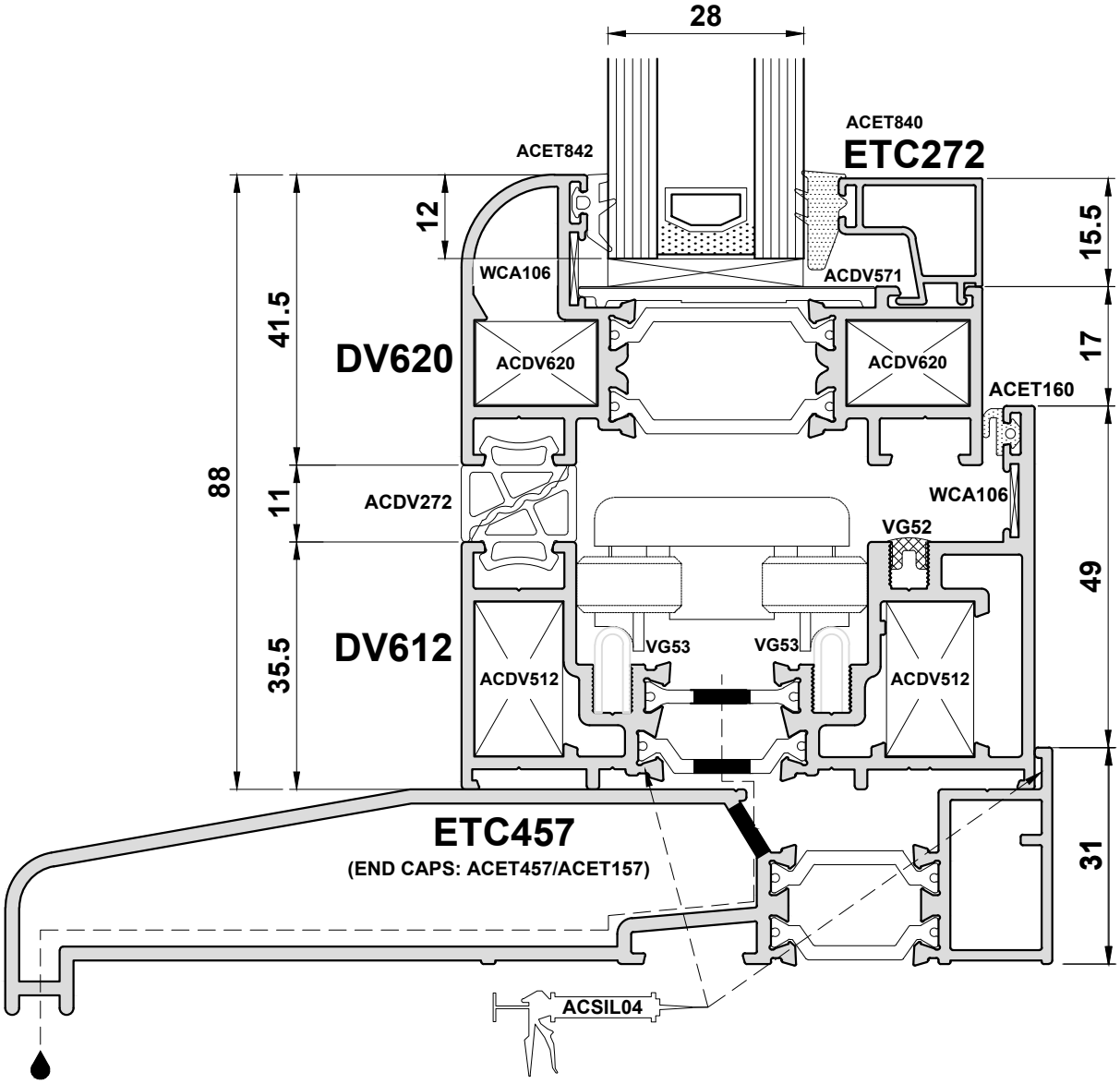

Do Not Scale From This Drawing

Open Out - Detail 6A

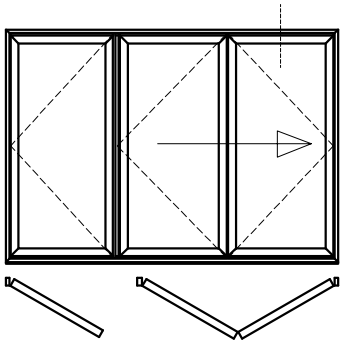

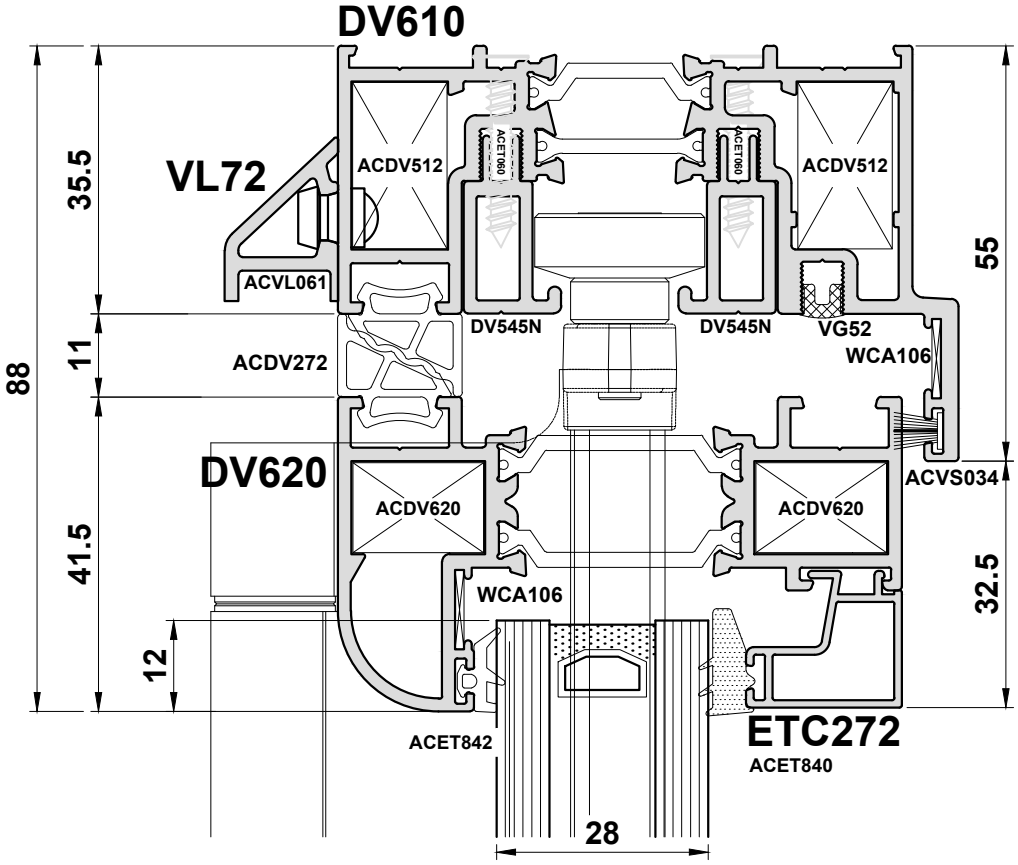

Do Not Scale From This Drawing

Open Out - Detail 6B

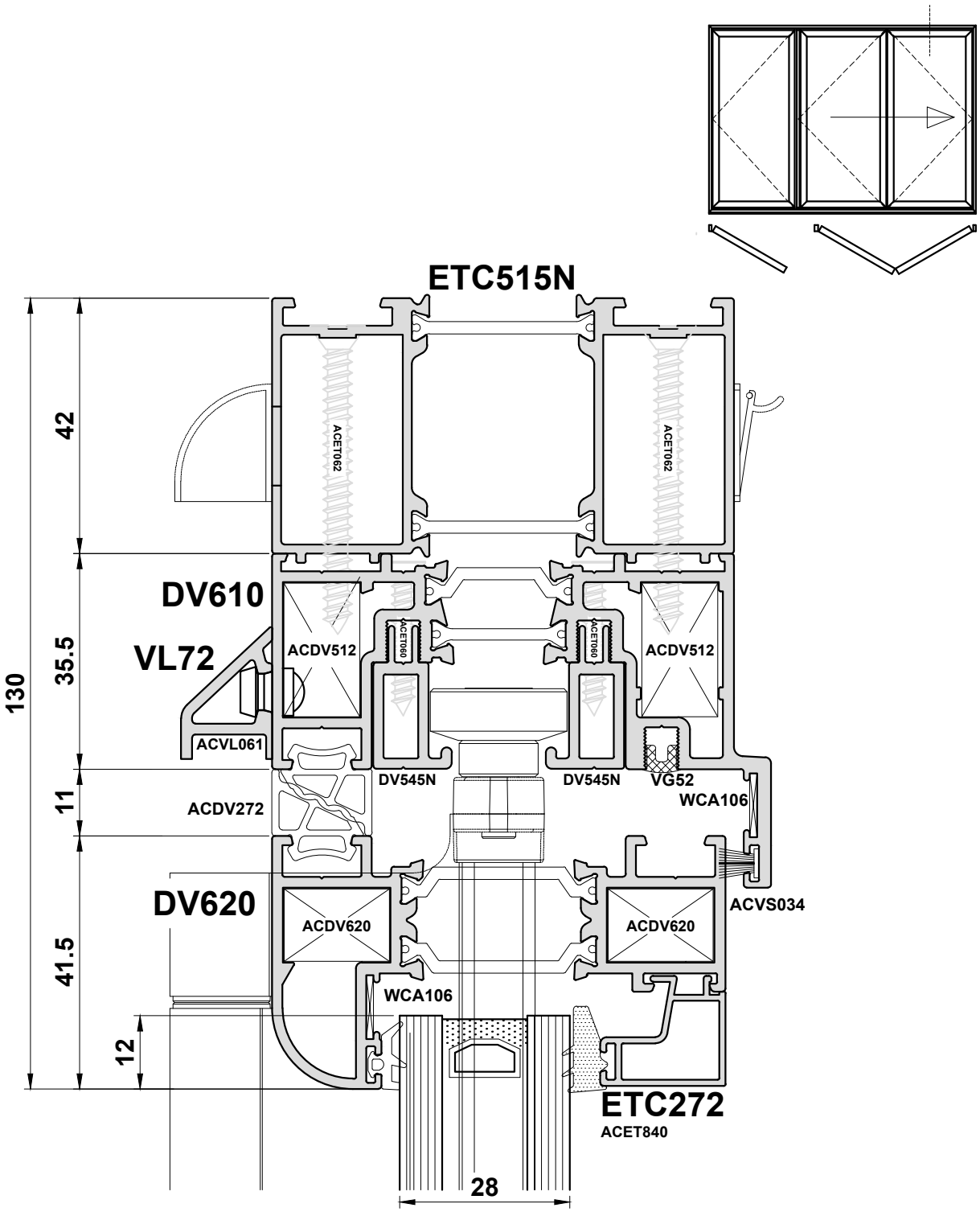

Do Not Scale From This Drawing

Open Out - Detail 6C

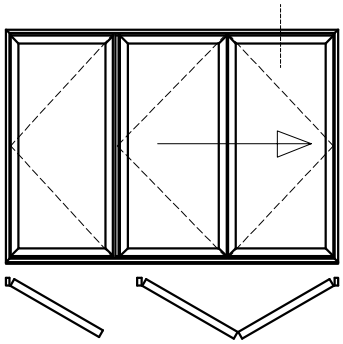

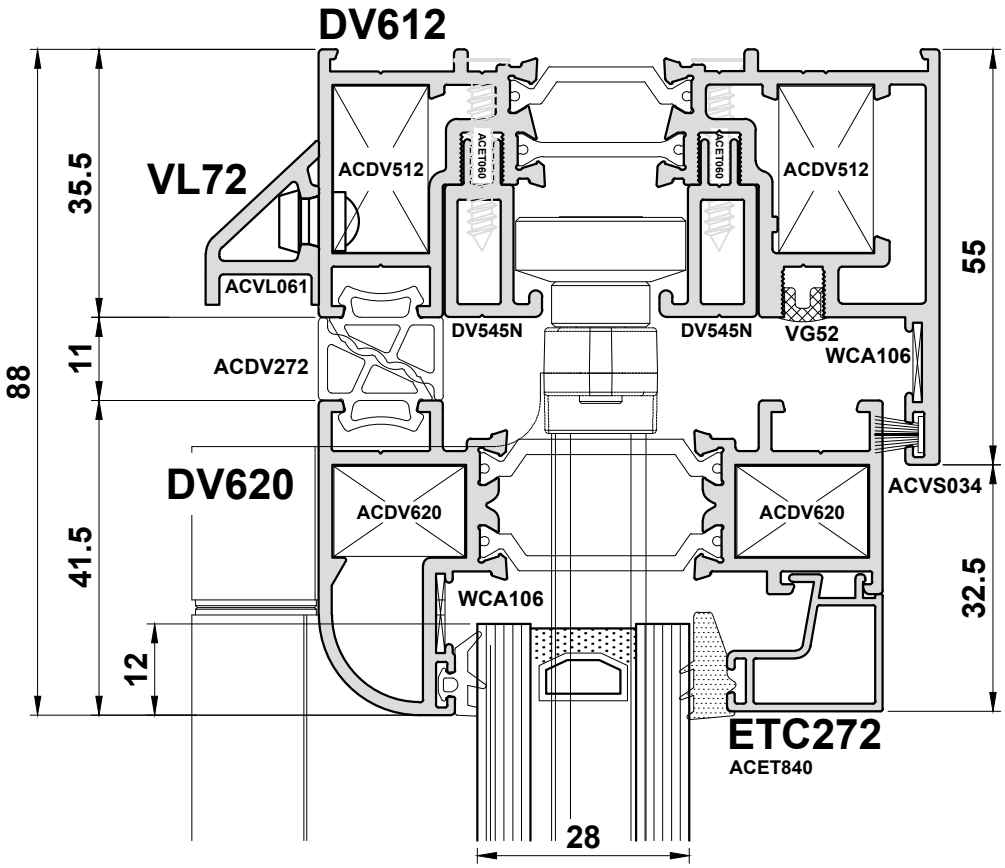

Do Not Scale From This Drawing

Open Out - Detail 7

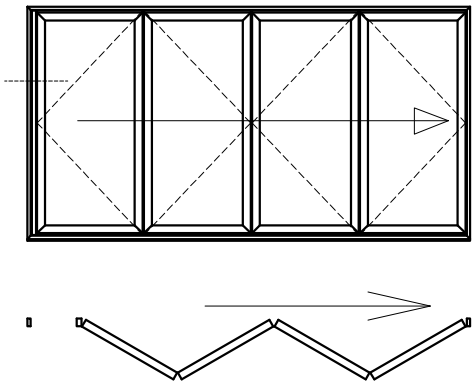

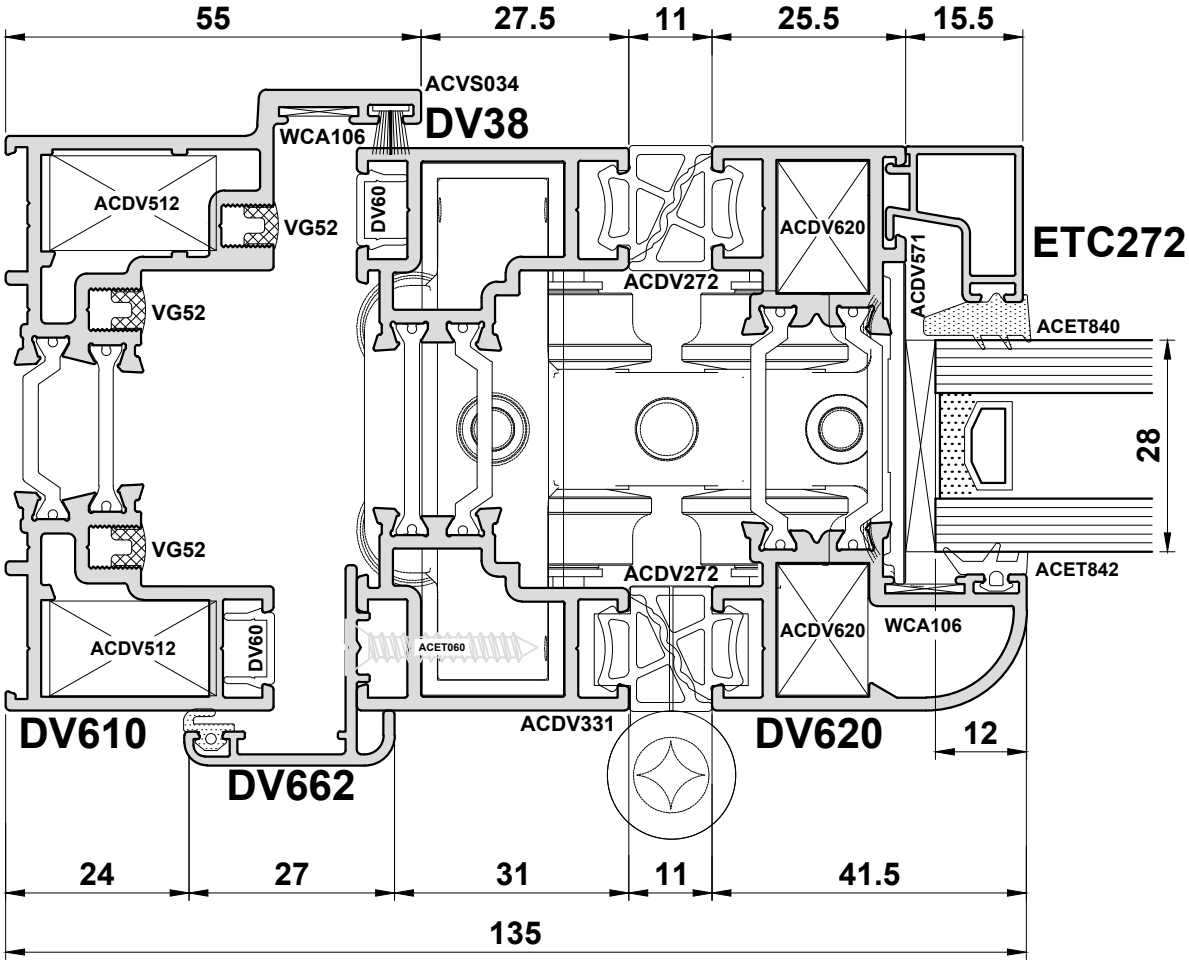

Do Not Scale From This Drawing

Open Out - Detail 8

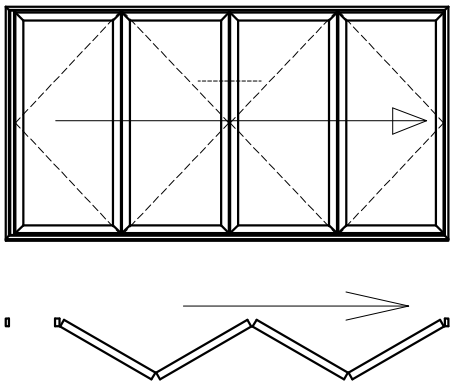

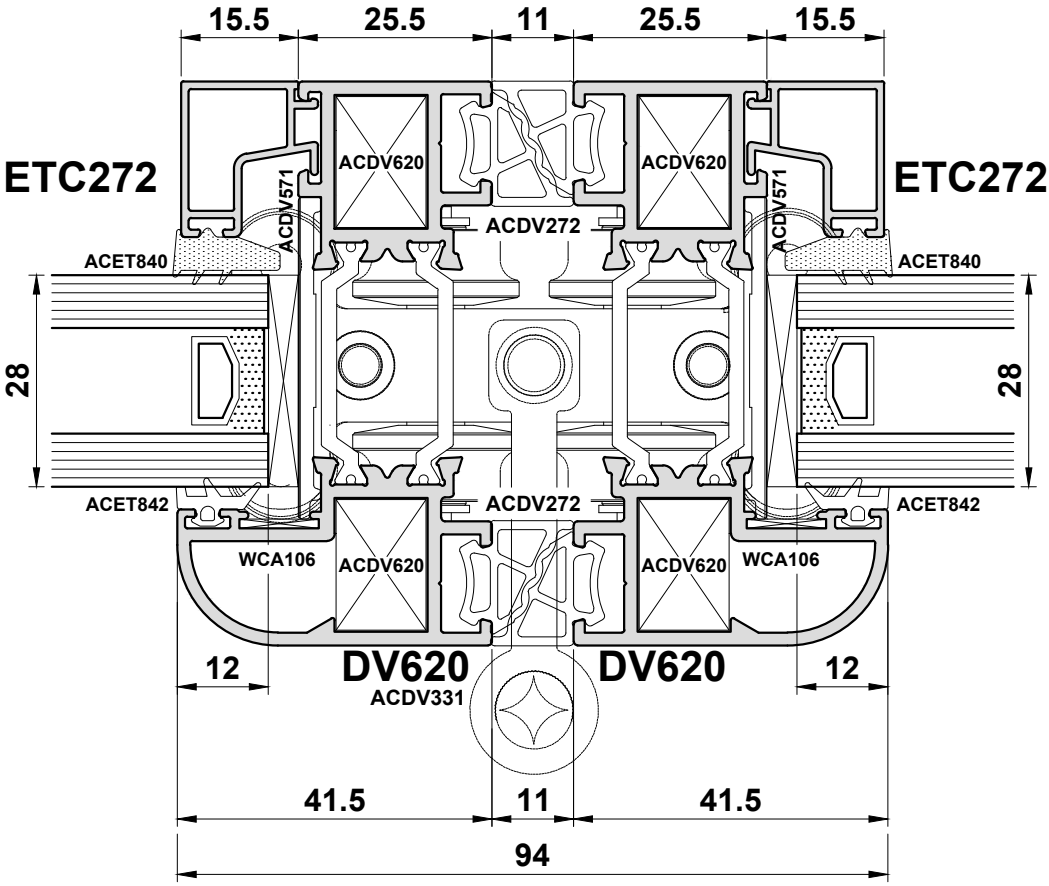

Do Not Scale From This Drawing

Open Out - Detail 9

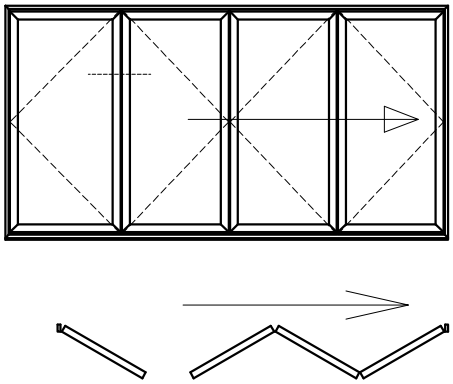

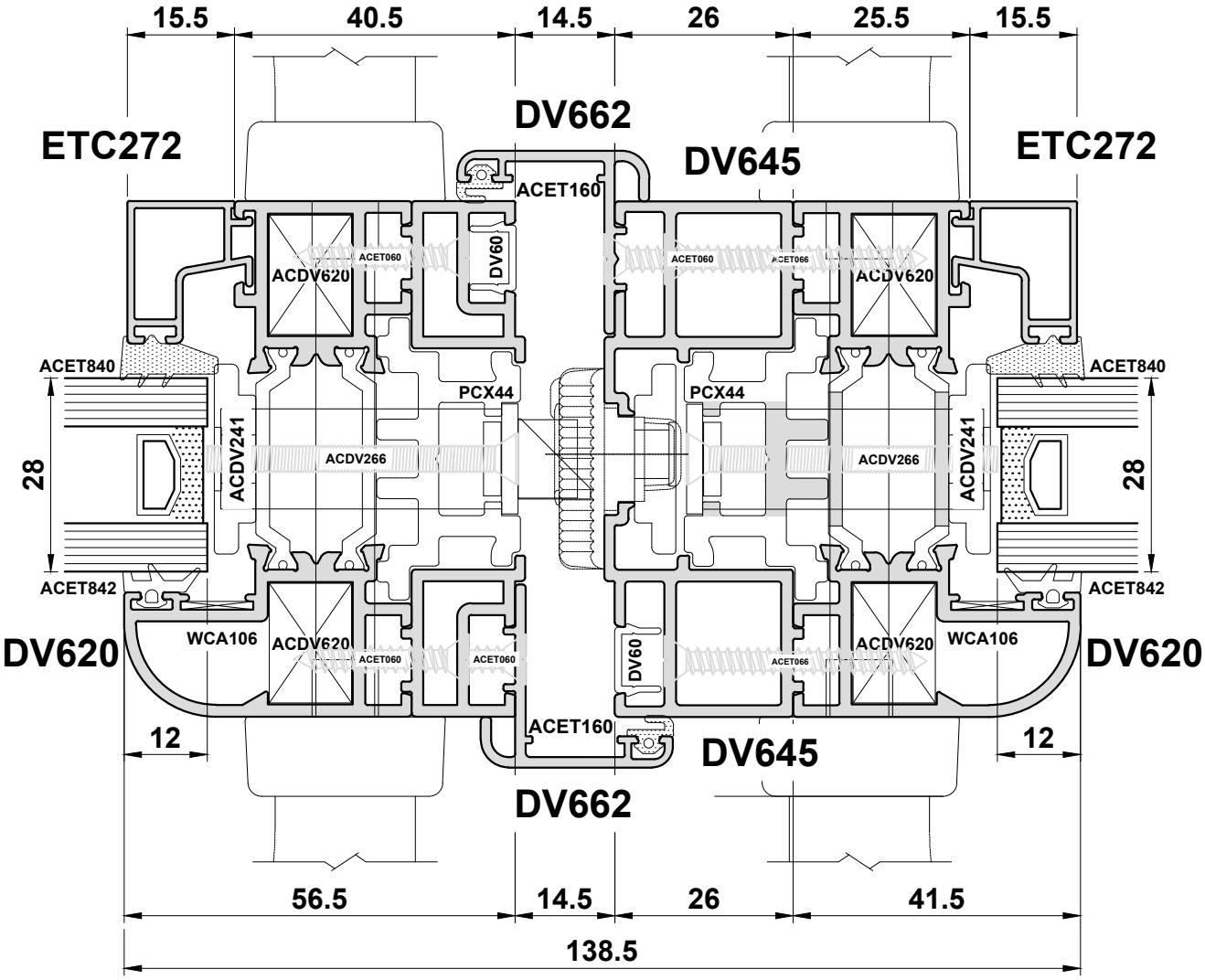

Do Not Scale From This Drawing

Open Out - Detail 10

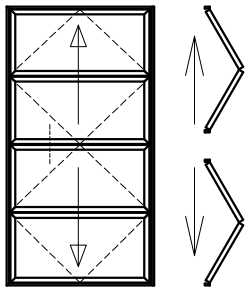

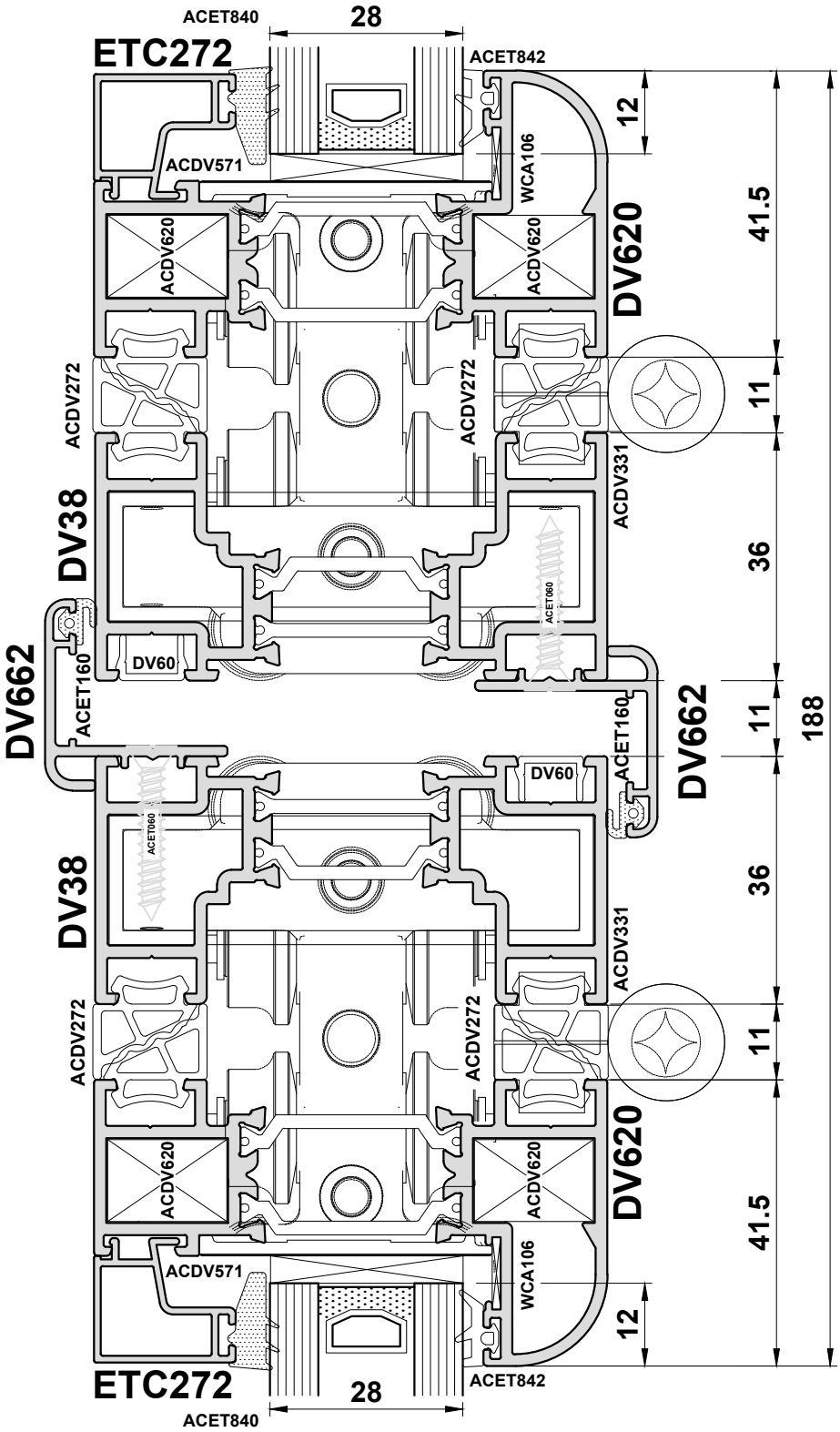

Do Not Scale From This Drawing

Open Out - Detail 11

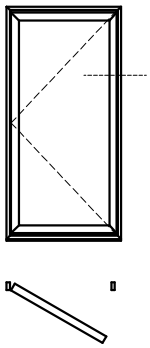

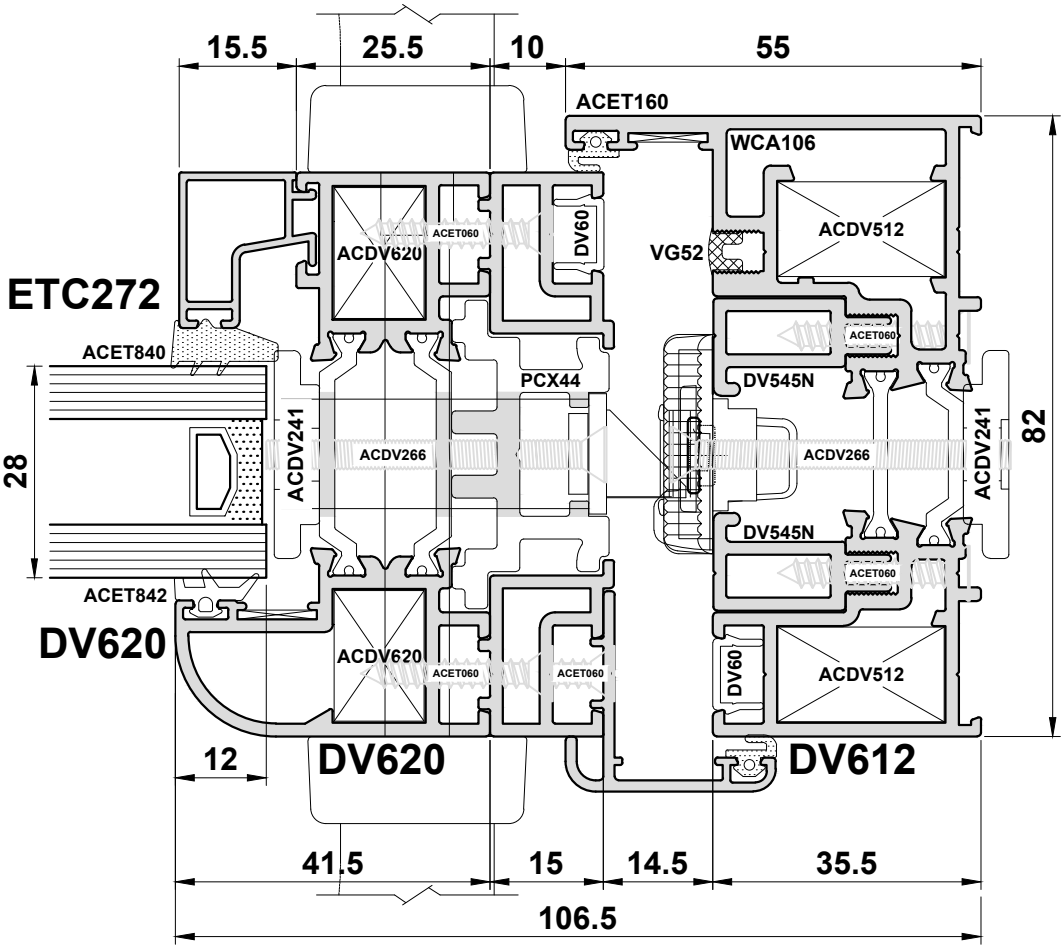

Do Not Scale From This Drawing

Open Out - Detail 12A

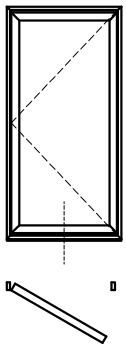

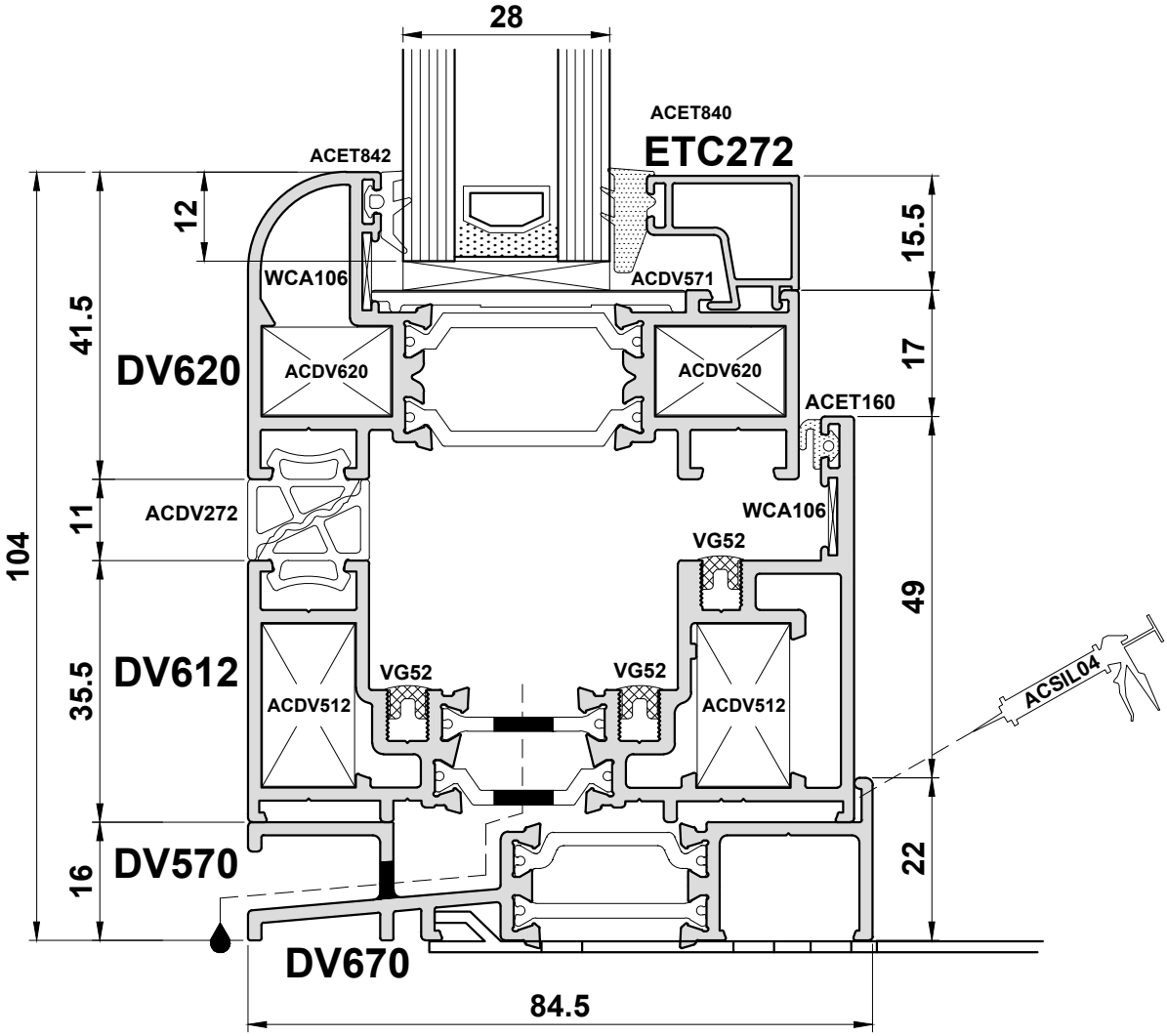

Do Not Scale From This Drawing

Open Out - Detail 12B

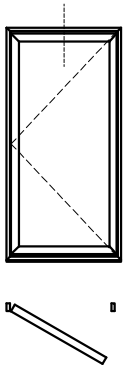

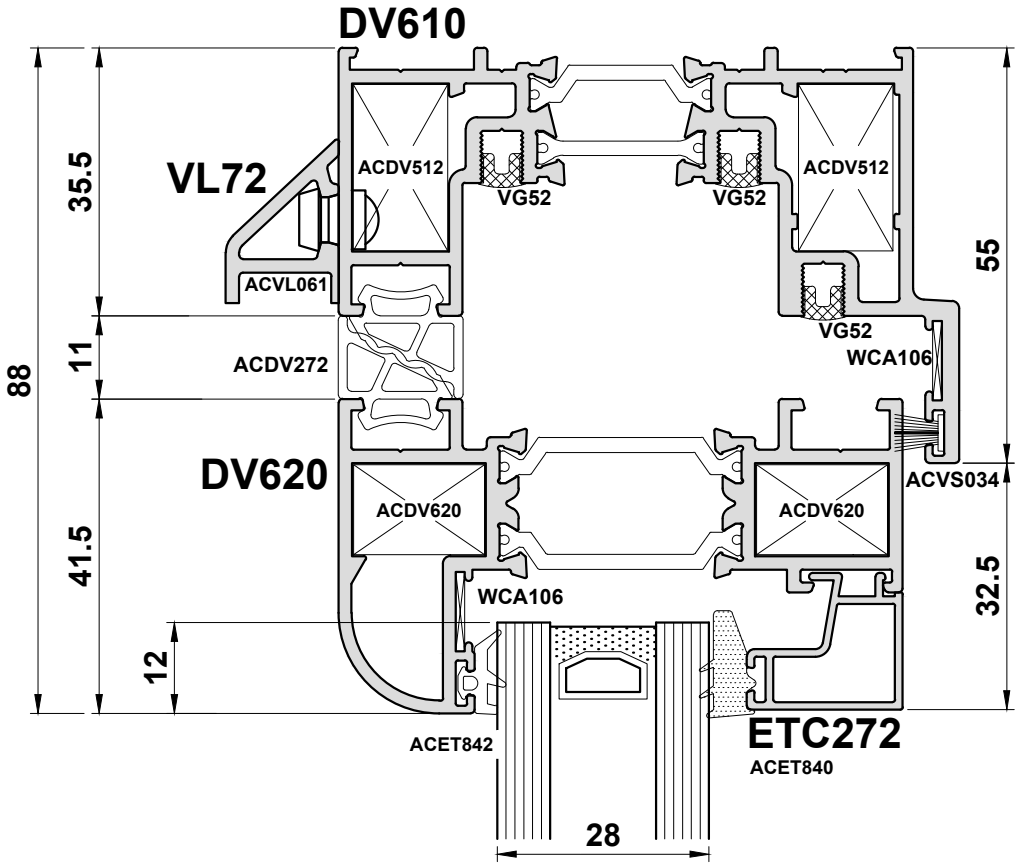

Do Not Scale From This Drawing

Open Out - Detail 13

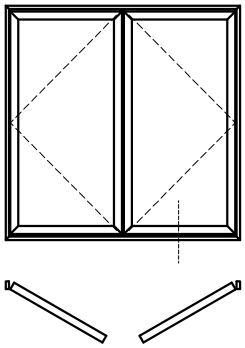

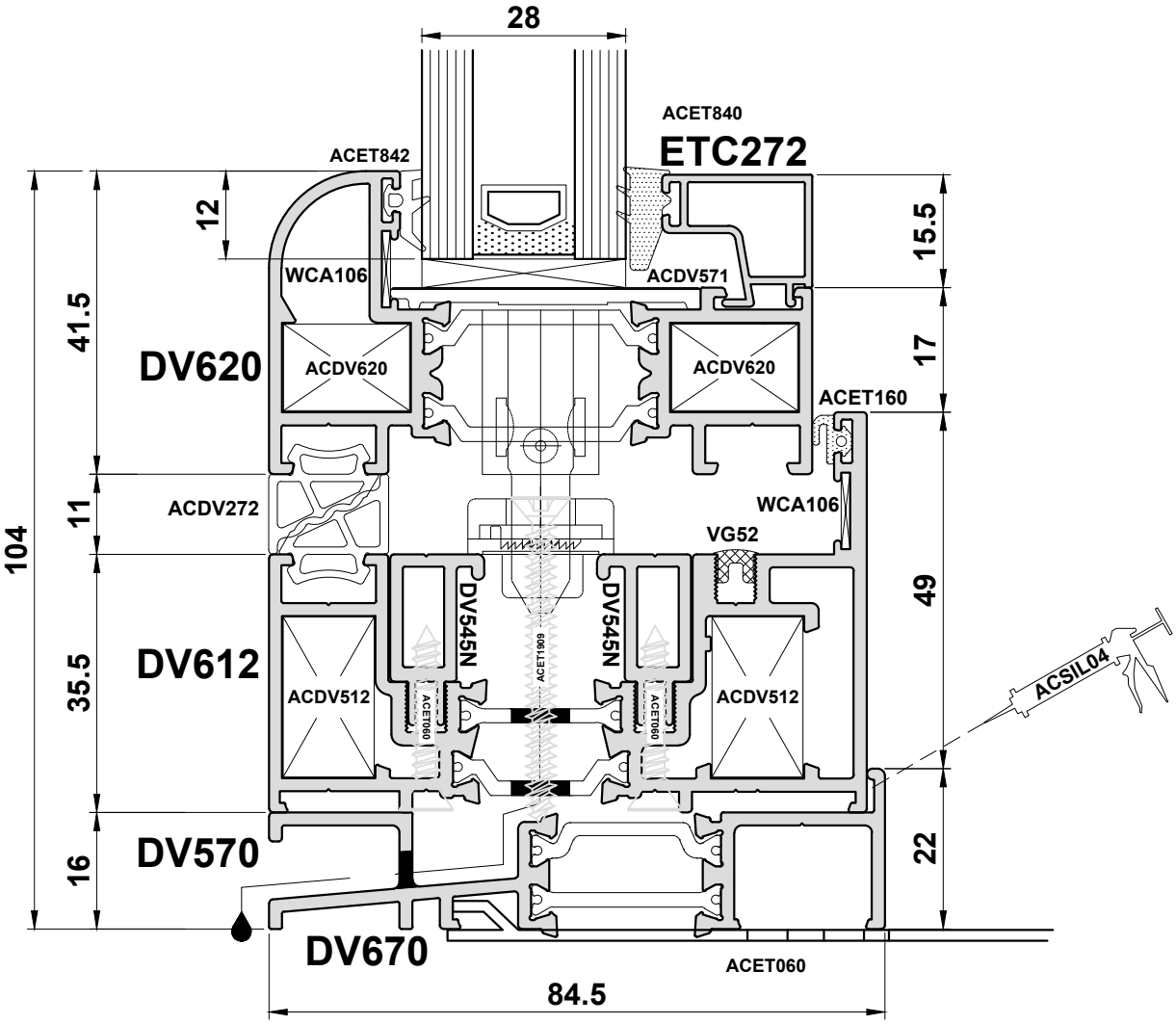

Do Not Scale From This Drawing

Open Out - Detail 14

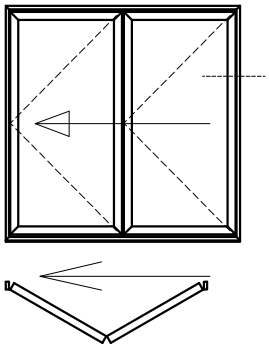

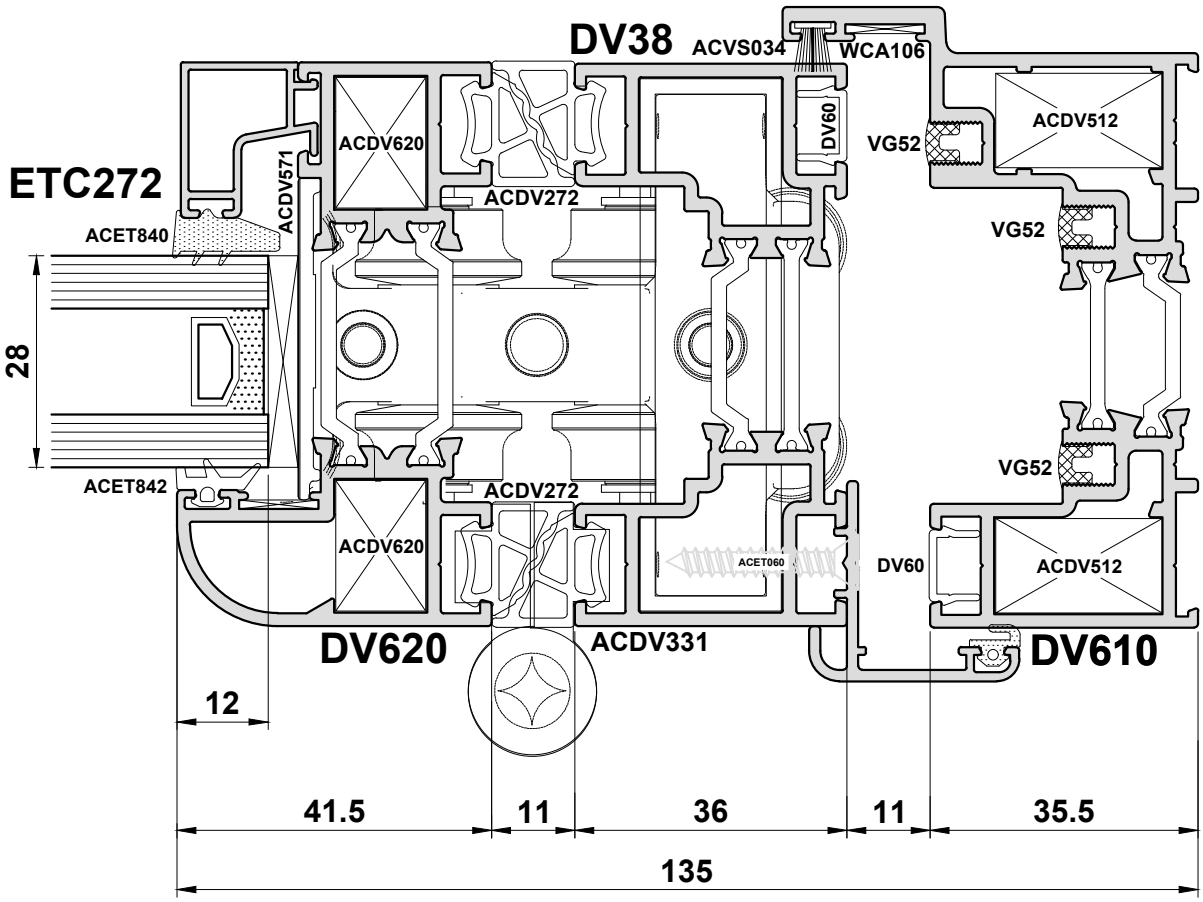

Secondary.

Do Not Scale From This Drawing

Open Out - Detail 15

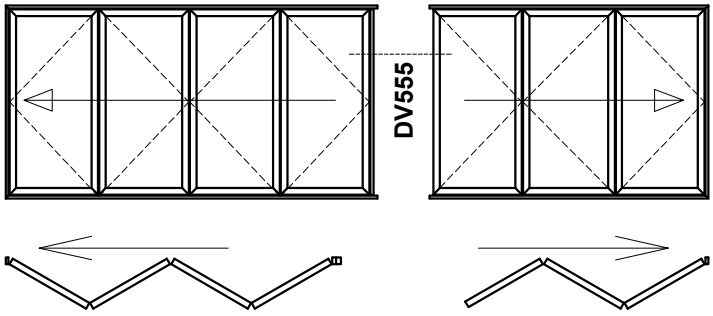

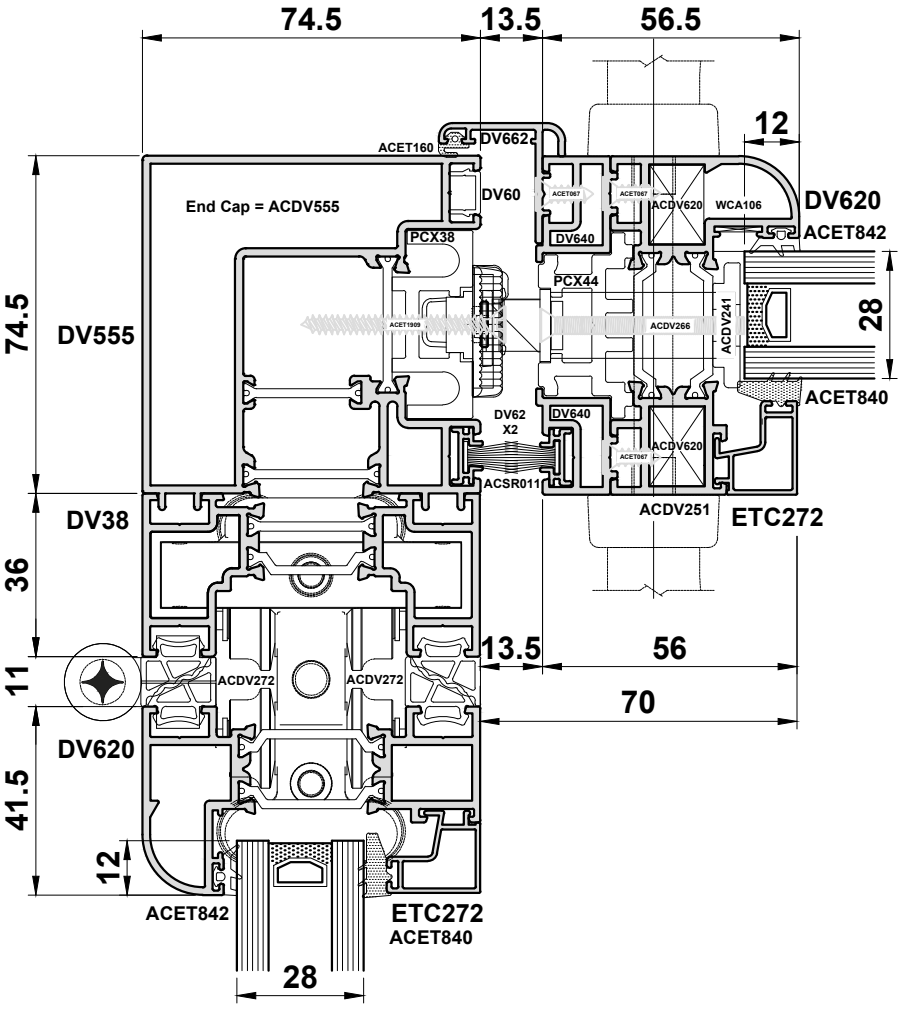

Primary.

Odd number of leaves.

Even Number of Leafs

Do Not Scale From This Drawing

Open Out - Detail 16

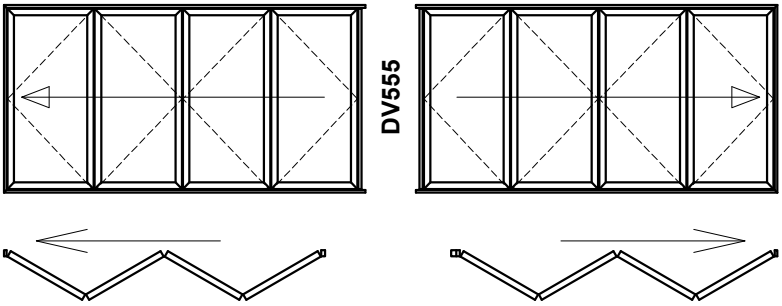

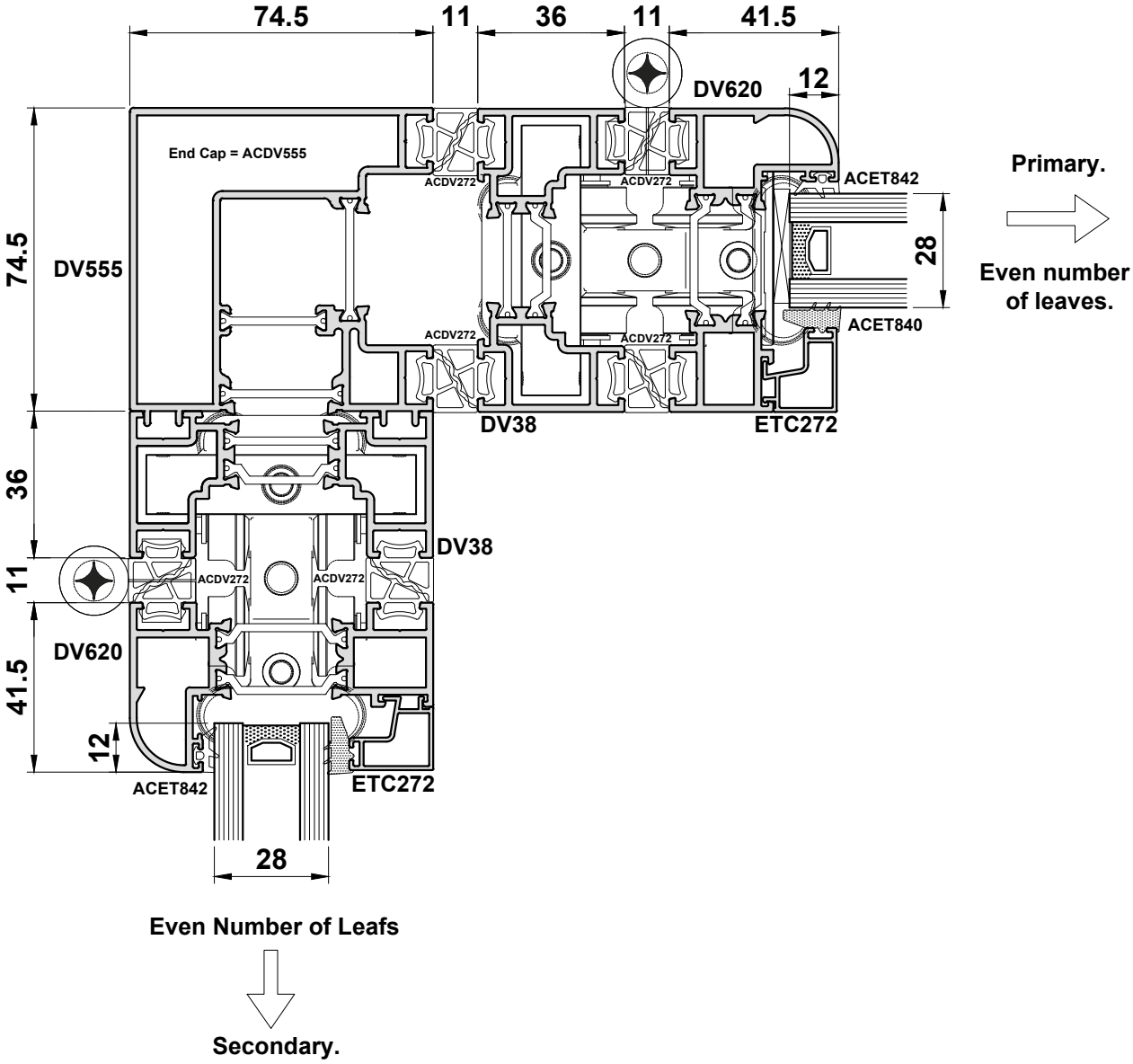

Do Not Scale From This Drawing

Open Out - Detail 17

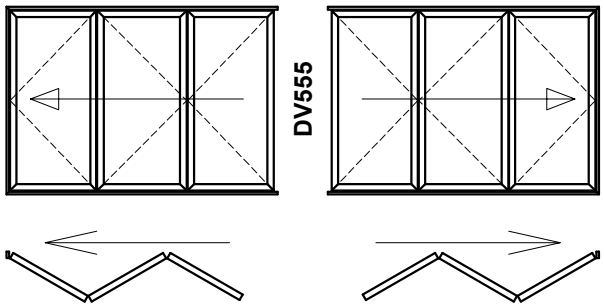

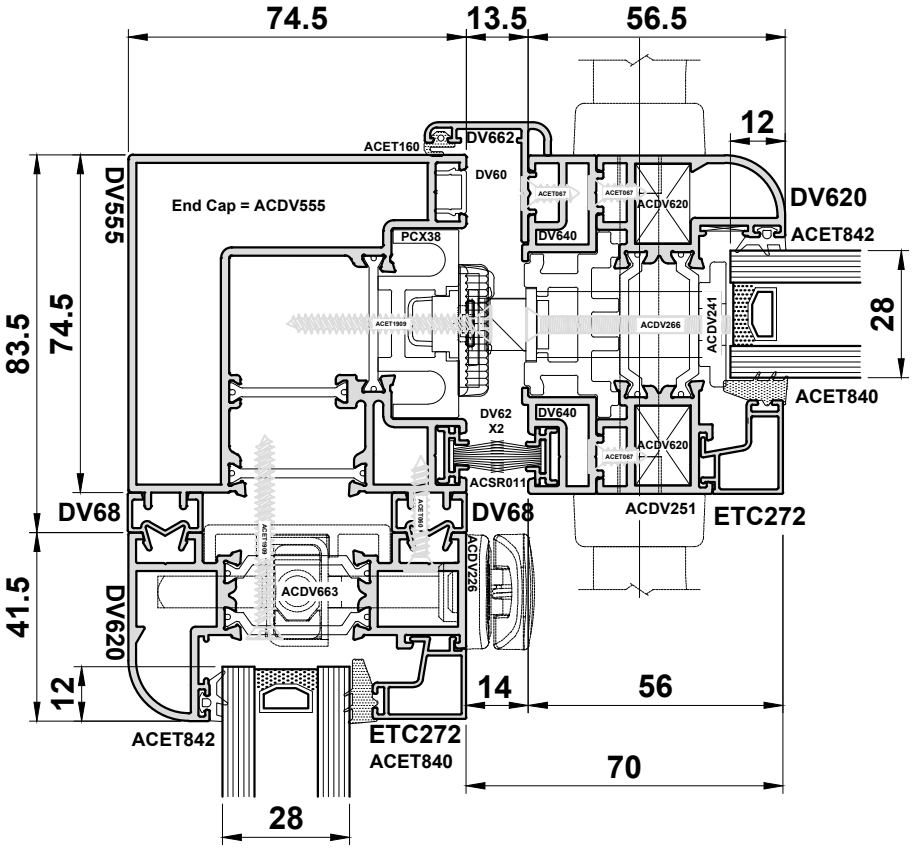

Primary.

Odd number of leaves.

Odd Number of Leafs

Secondary.

Do Not Scale From This Drawing

Open In Scale Elevations

Type 1i

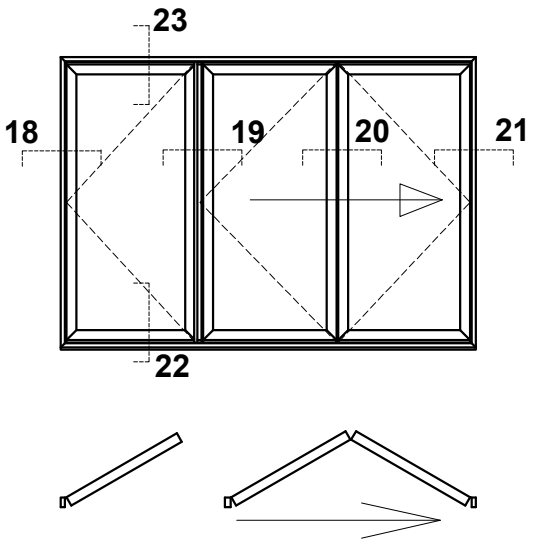

Type 2i

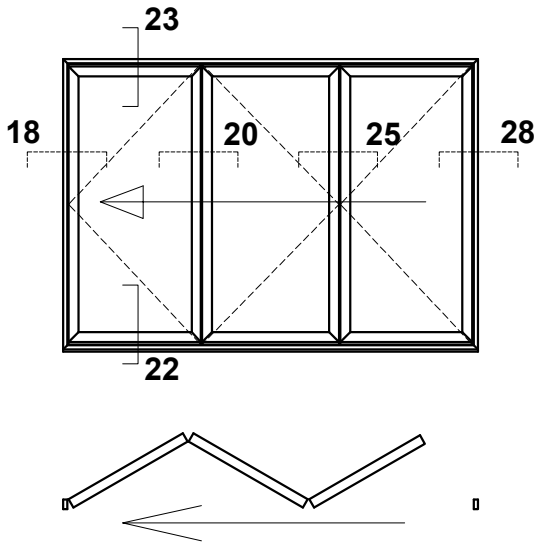

Type 3i

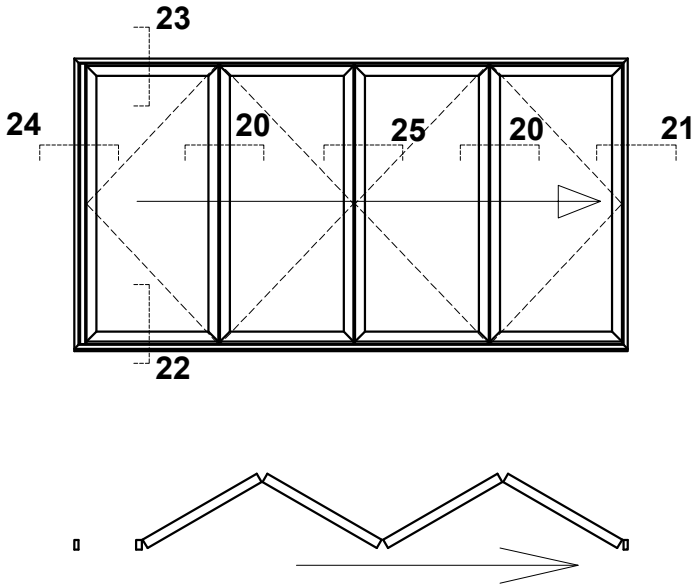

No External Access Or Traffic Door With This Design

Do Not Scale From This Drawing

Open In Scale Elevations

Type 4i

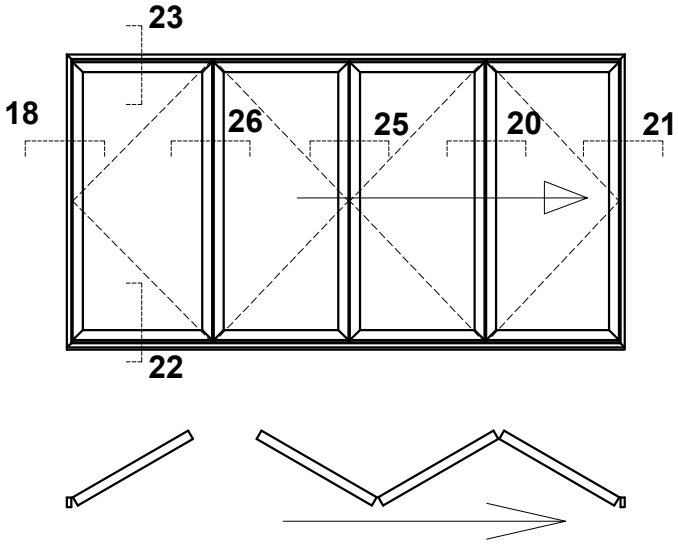

Type 5i

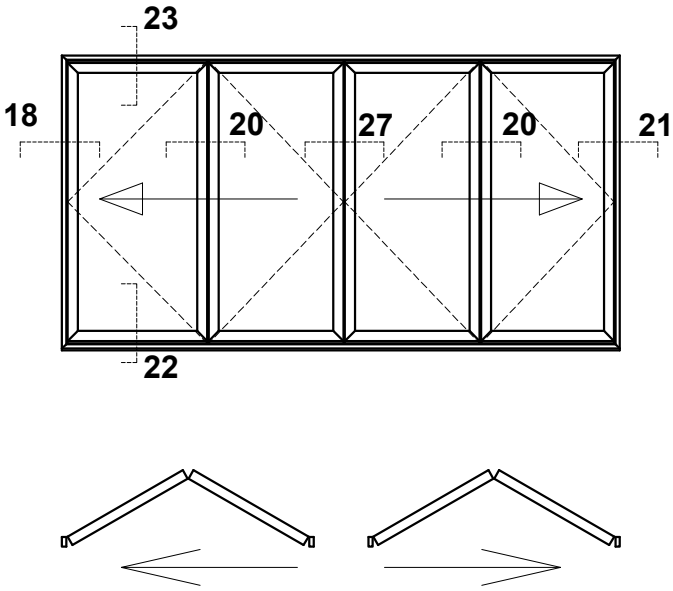

Do Not Scale From This Drawing

Open In Scale Elevations

Type 6i

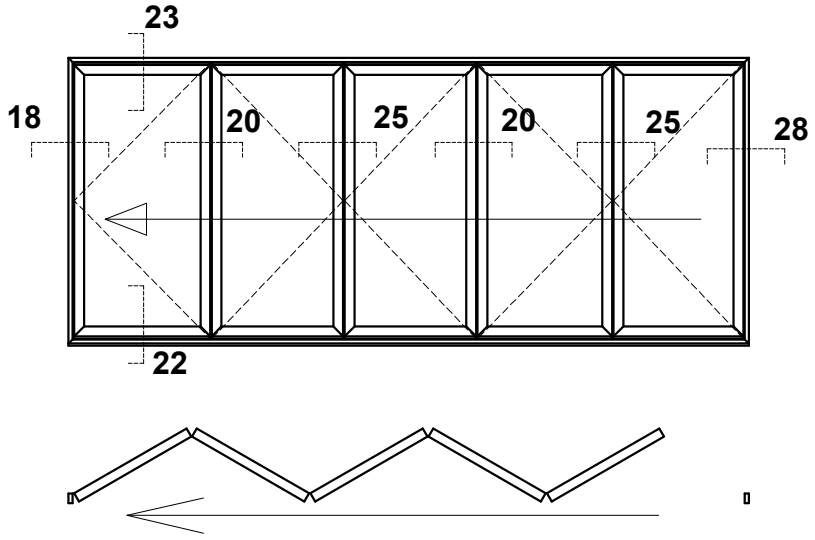

Type 7i

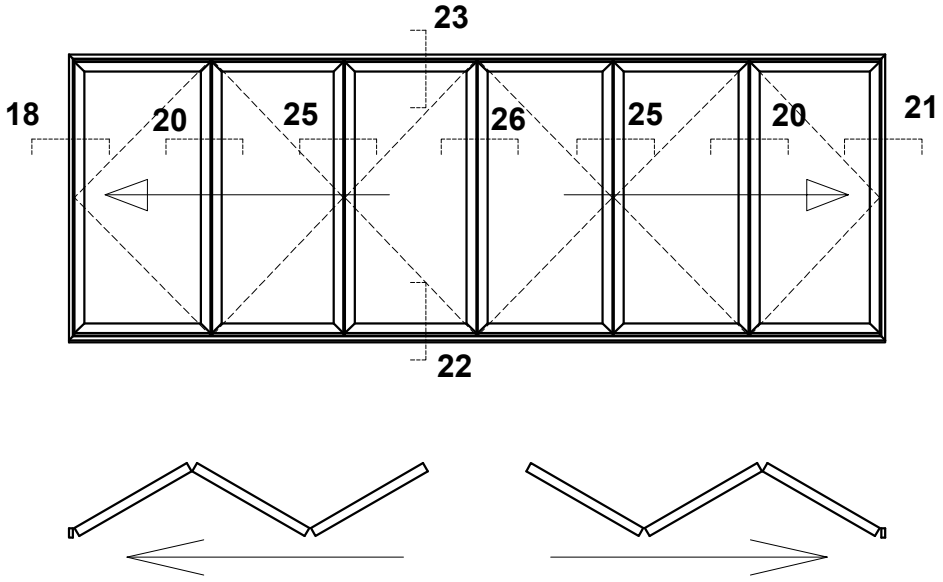

Do Not Scale From This Drawing

Open In Scale Elevations

Single Swing Door.

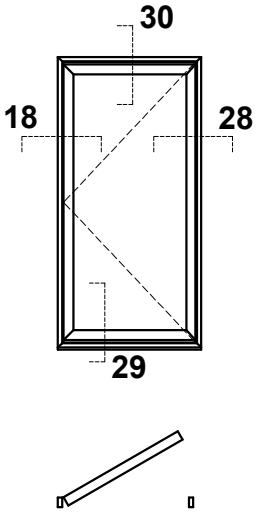

Double Swing Door

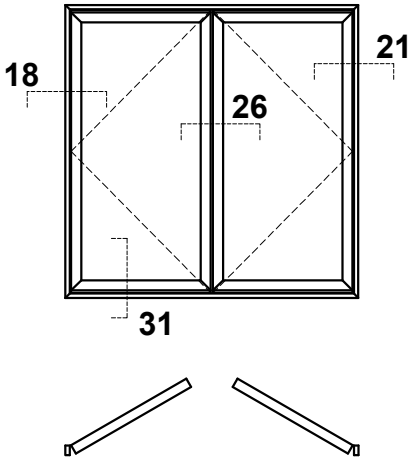

Double Slide Door

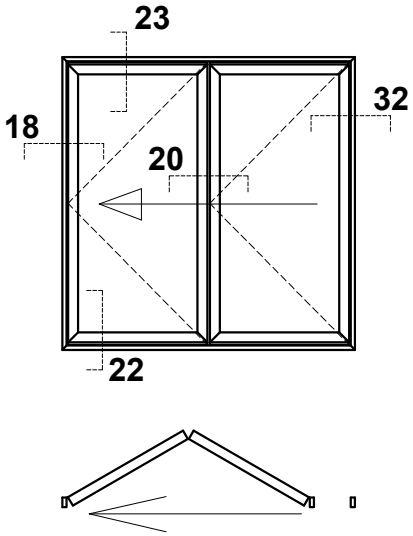

No External Access Or Traffic Door With This Design

3/2 Split Door

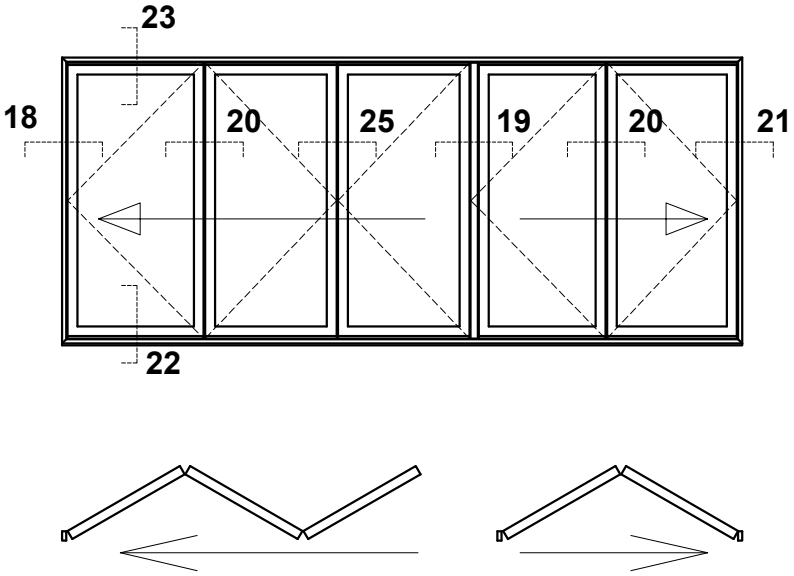

Do Not Scale From This Drawing

Open In - Detail 18

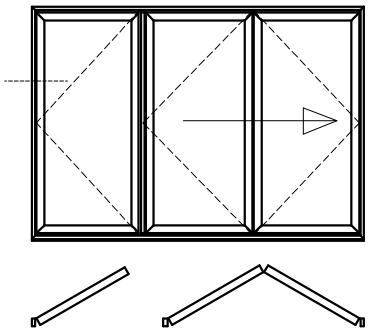

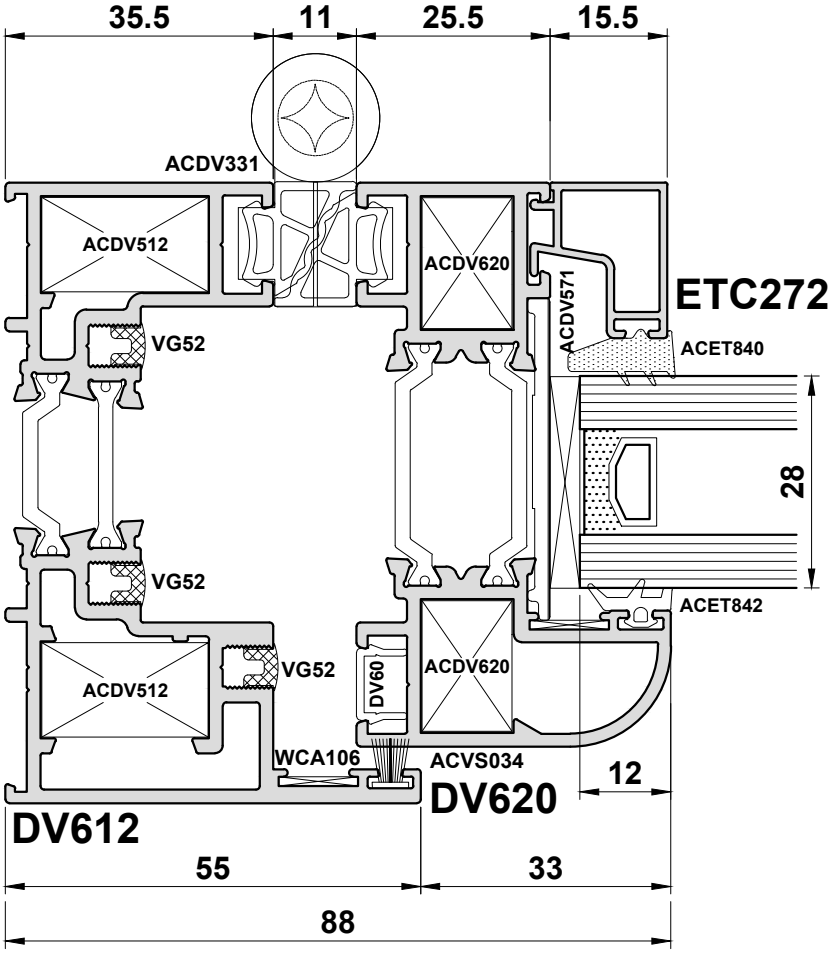

Do Not Scale From This Drawing

Open In - Detail 19

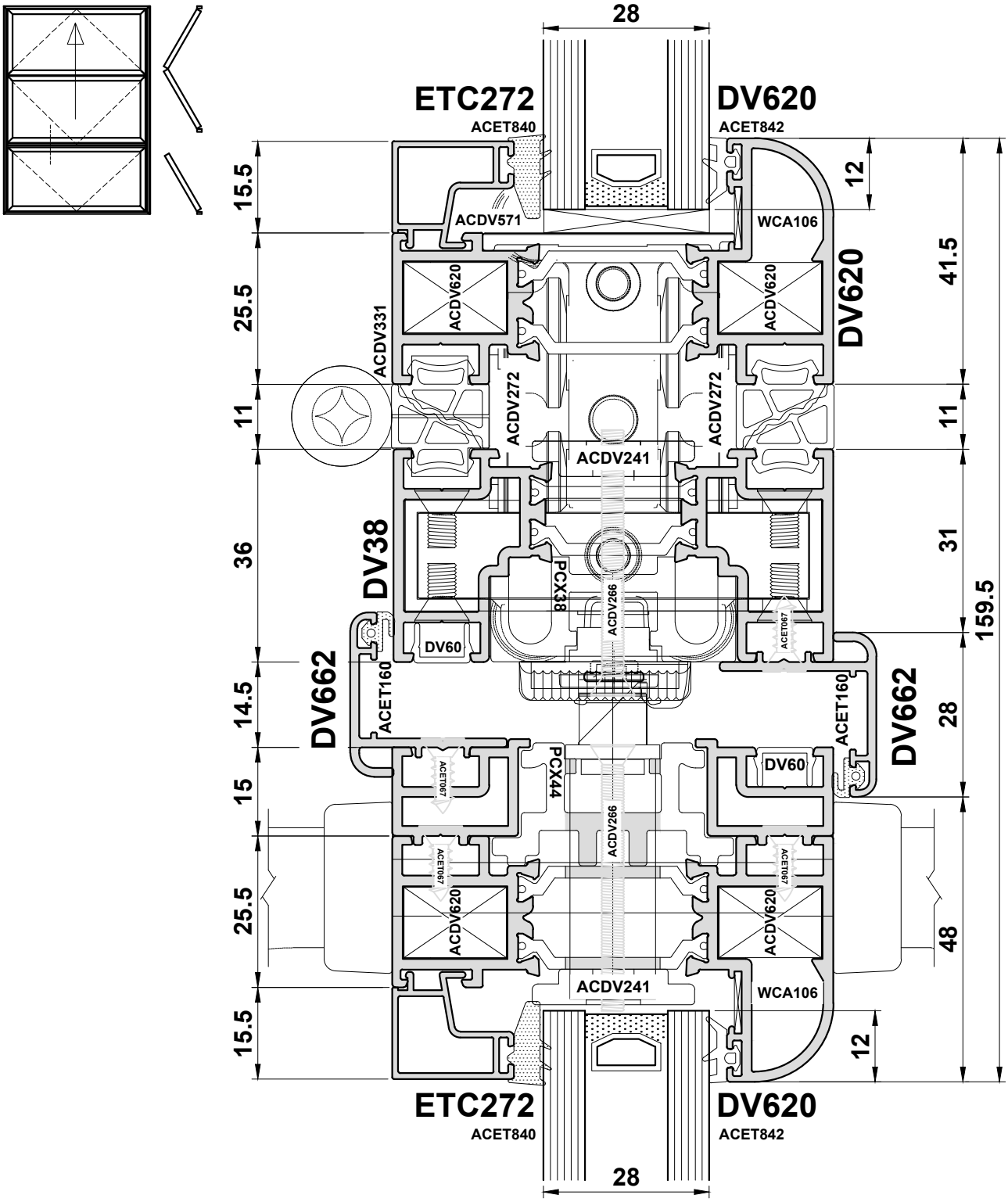

Do Not Scale From This Drawing

Open In - Detail 20

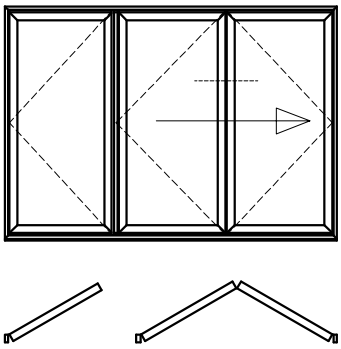

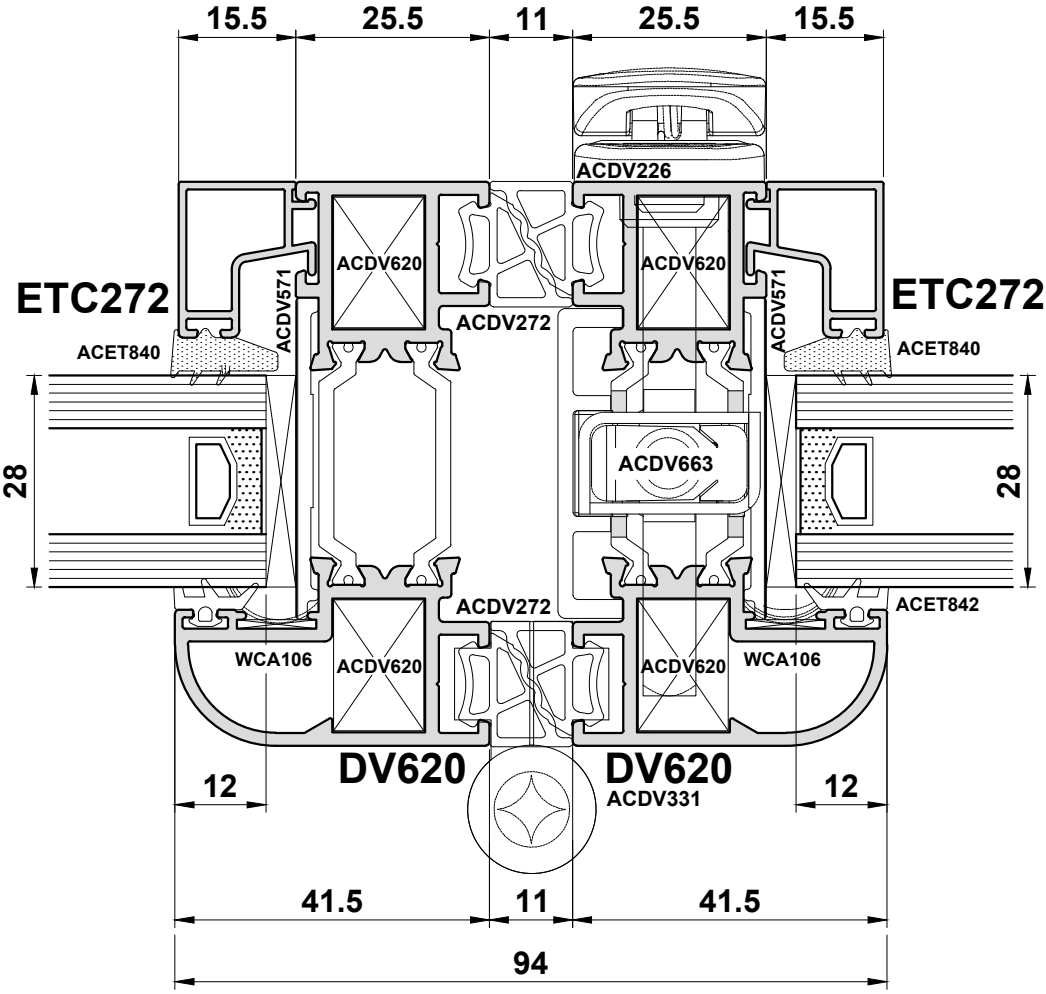

Do Not Scale From This Drawing

Open In - Detail 21

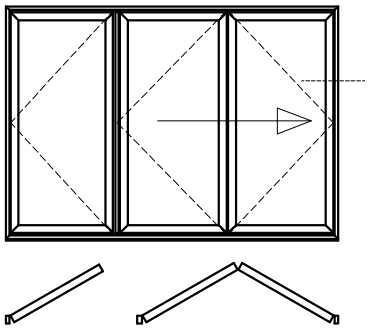

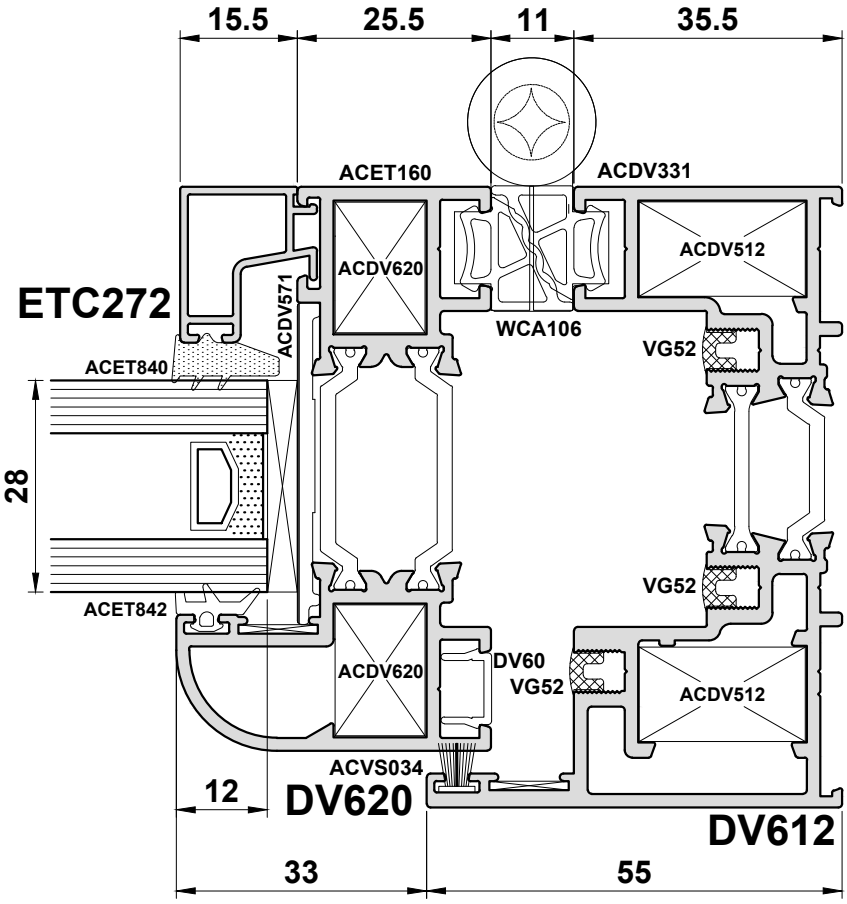

Do Not Scale From This Drawing

Open In - Detail 22A

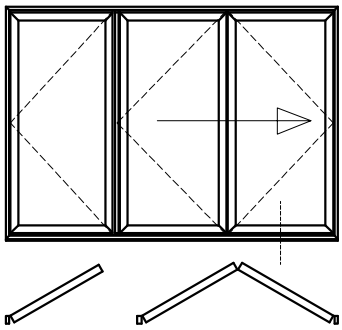

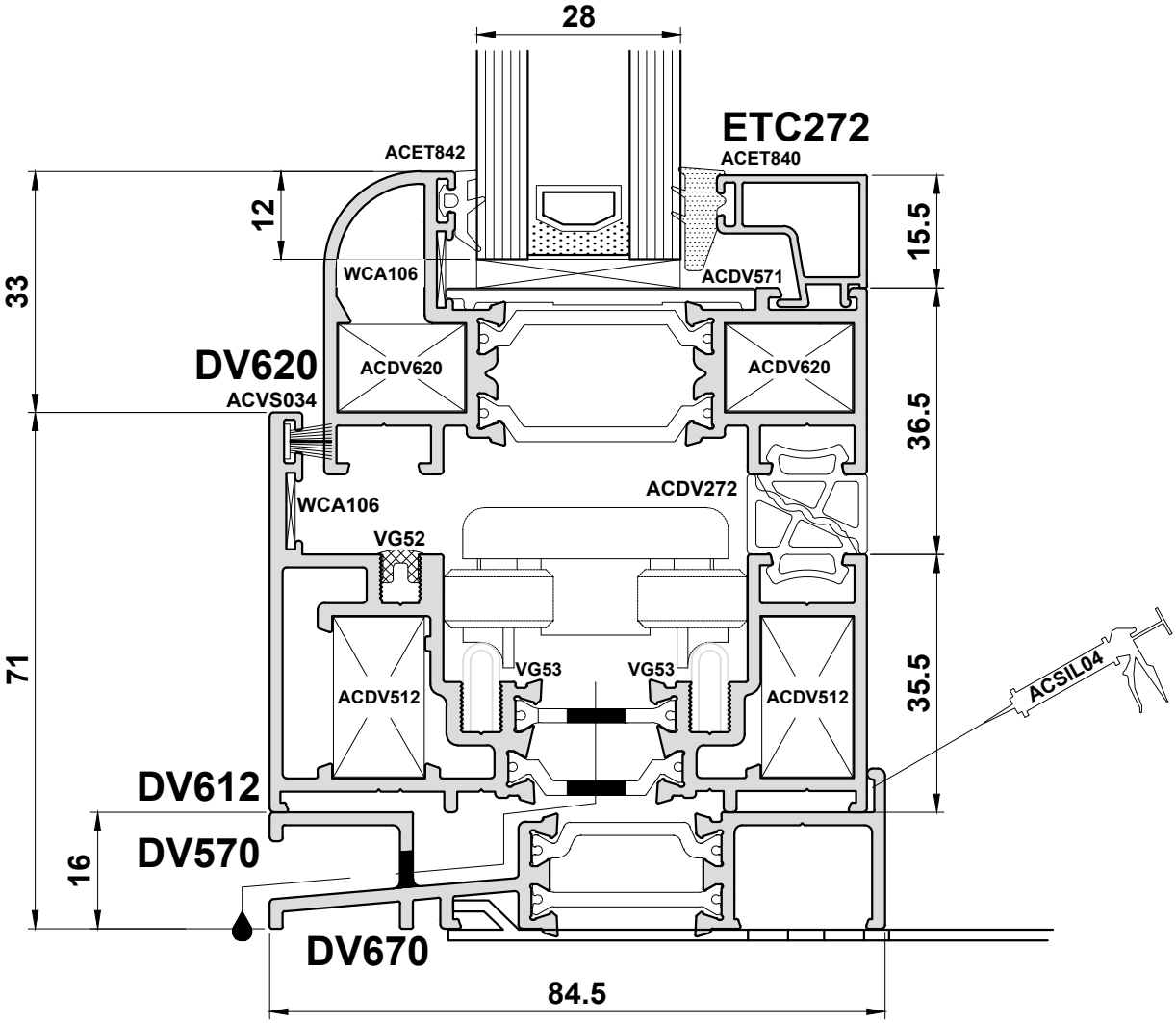

Do Not Scale From This Drawing

Open In - Detail 22B

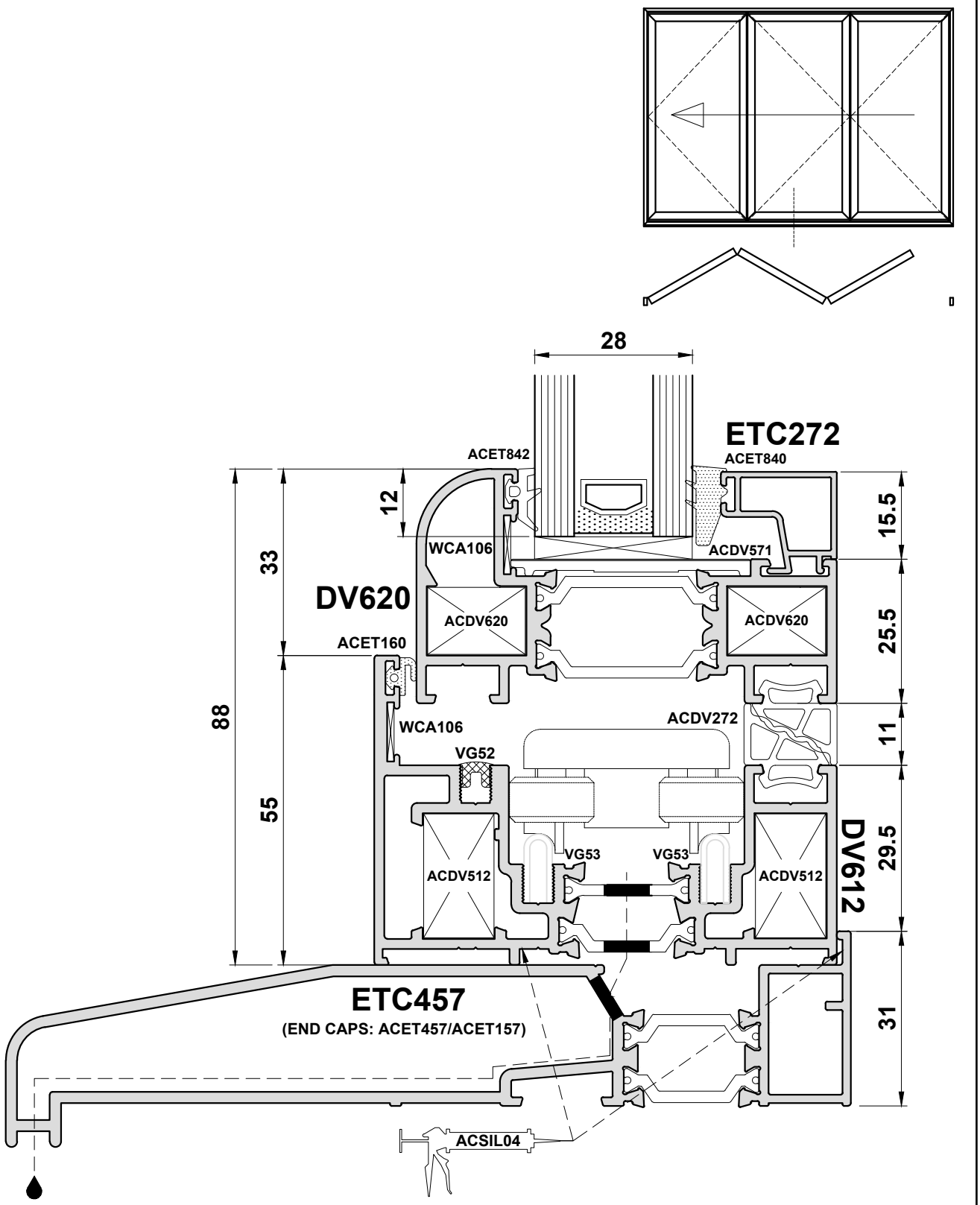

Do Not Scale From This Drawing

Open In - Detail 23A

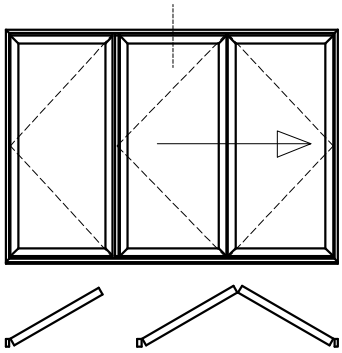

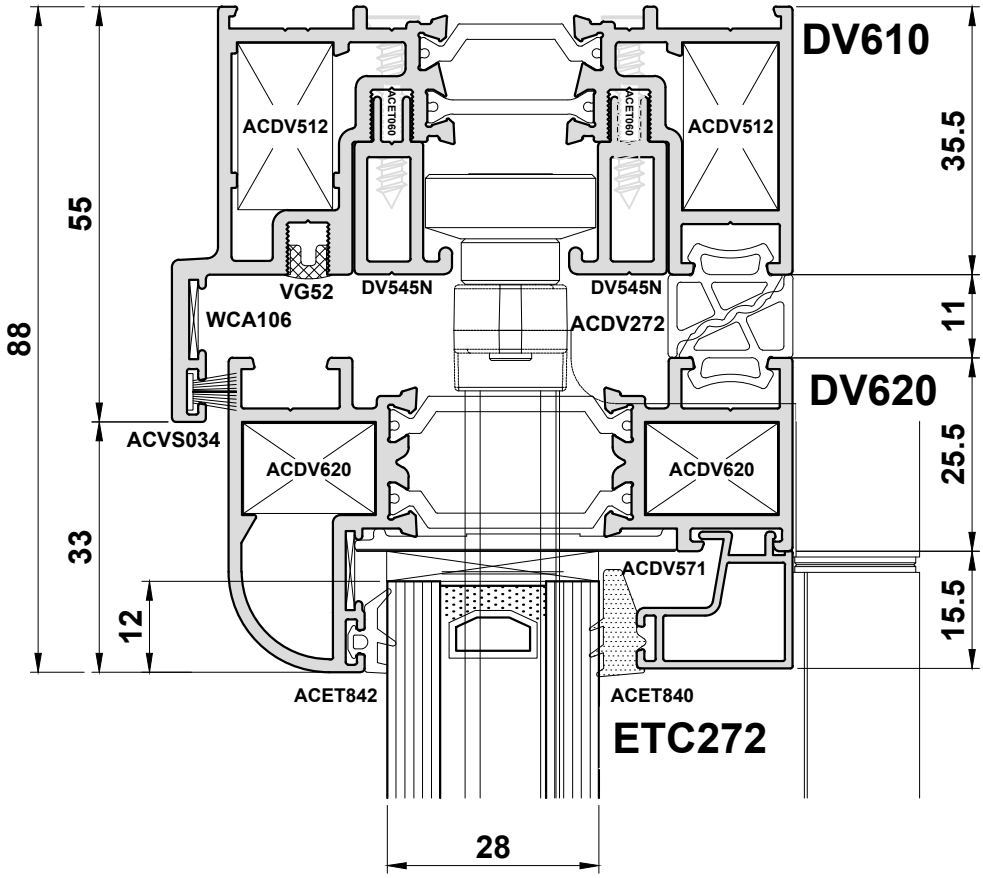

Do Not Scale From This Drawing

Open In - Detail 23B

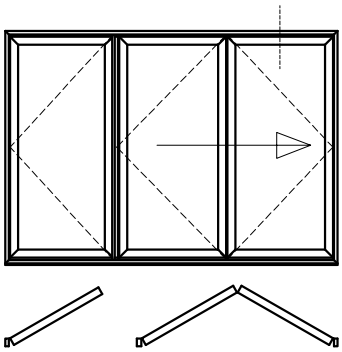

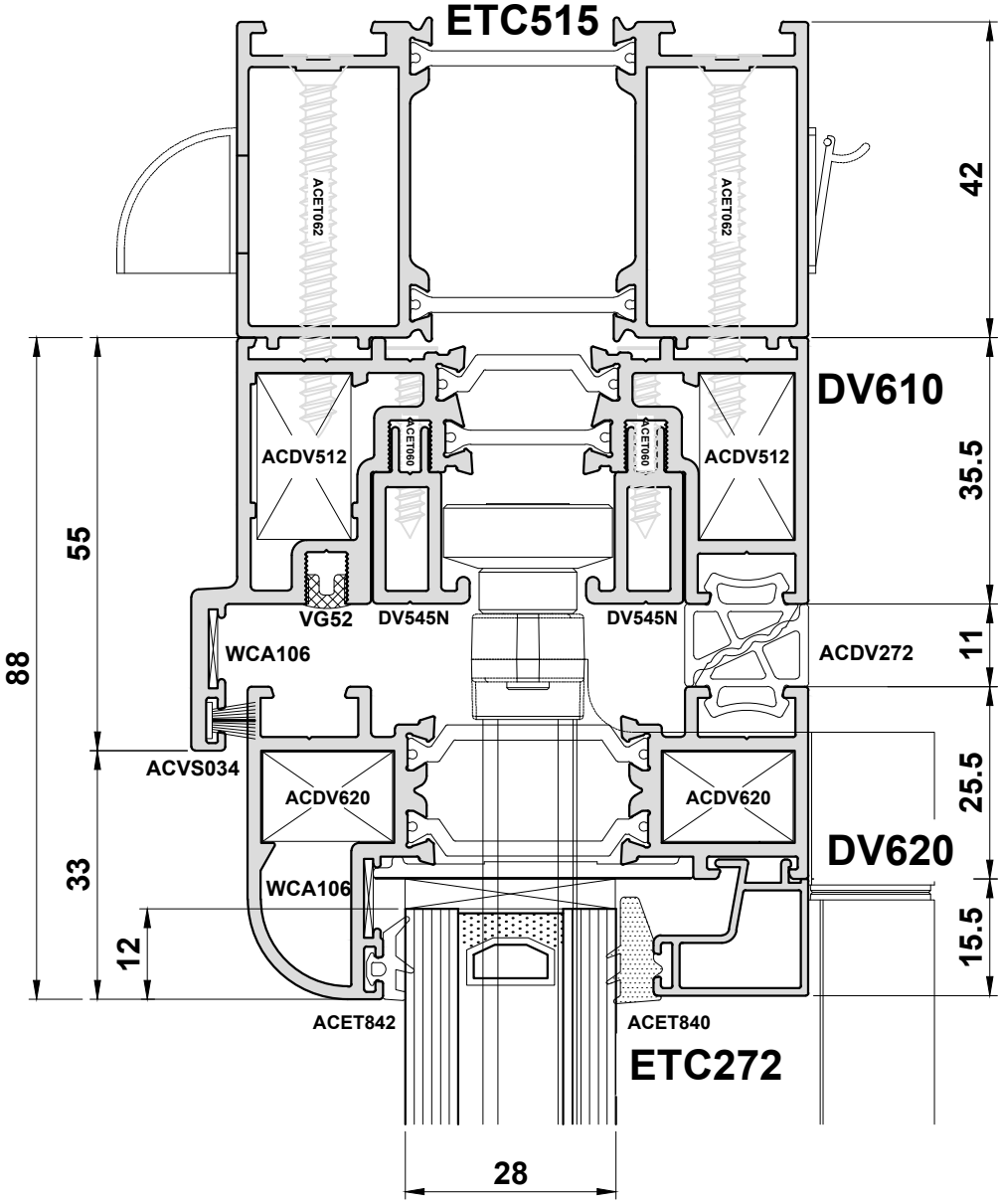

Do Not Scale From This Drawing

Open In - Detail 23C

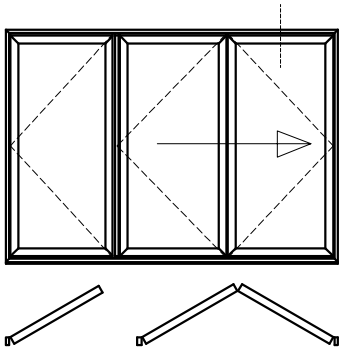

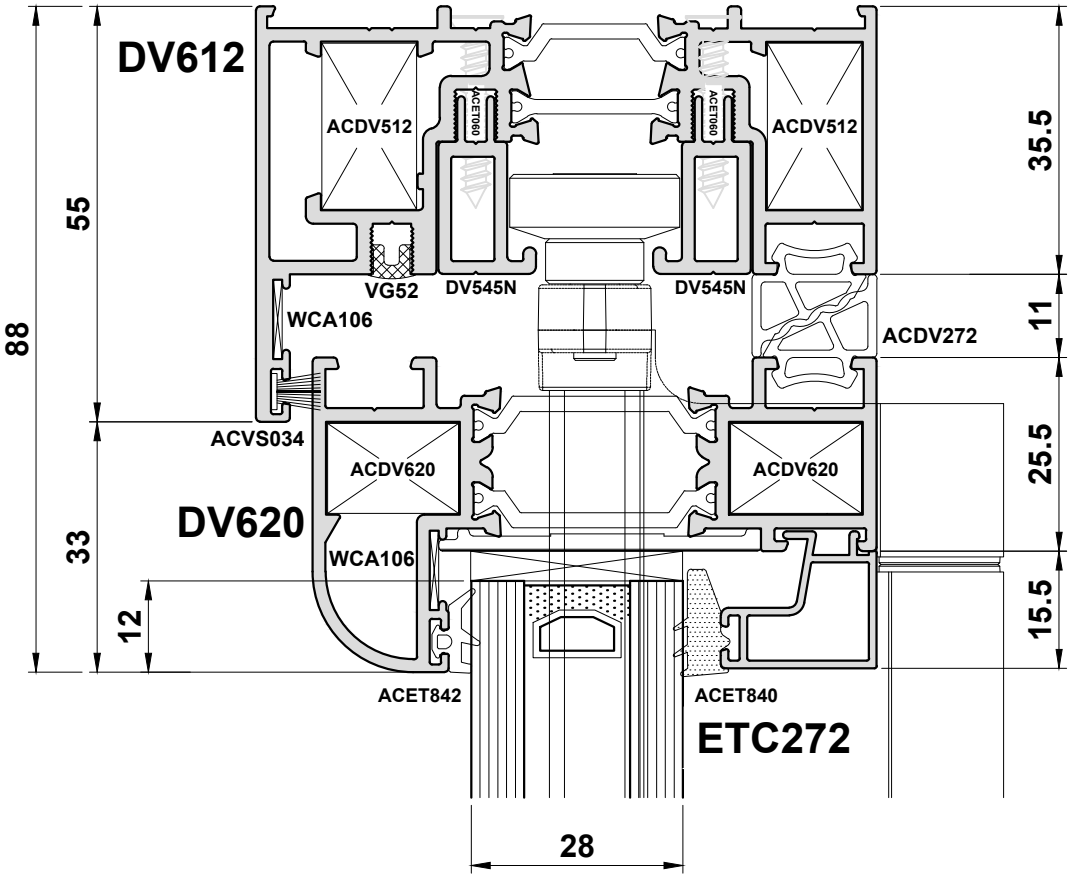

Do Not Scale From This Drawing

Open In - Detail 24

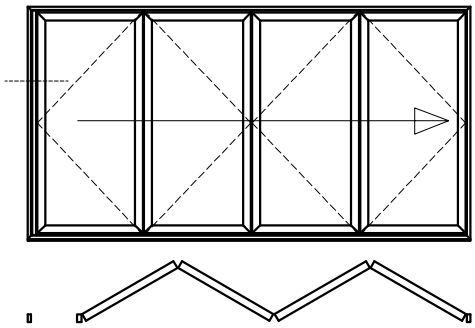

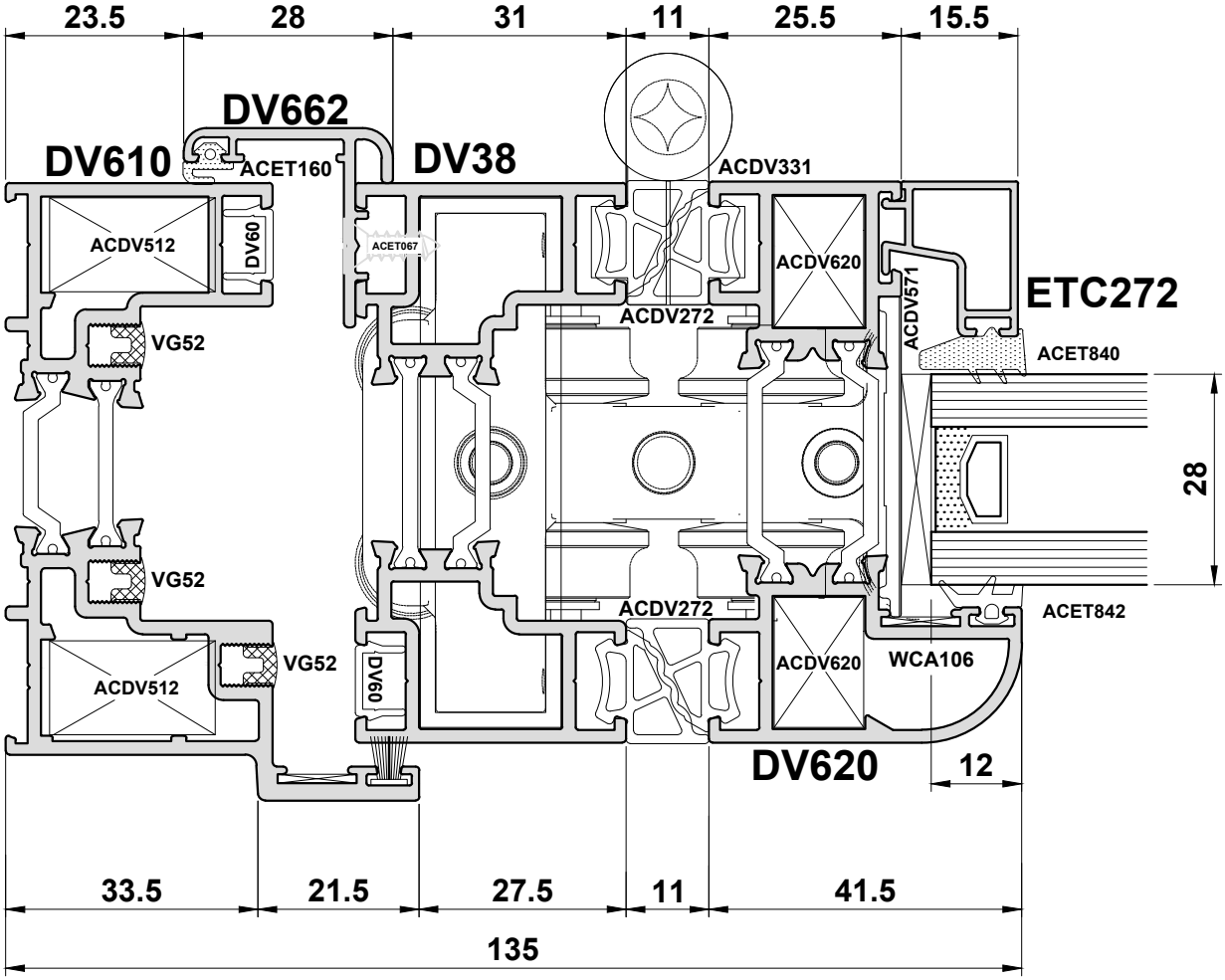

Do Not Scale From This Drawing

Open In - Detail 25

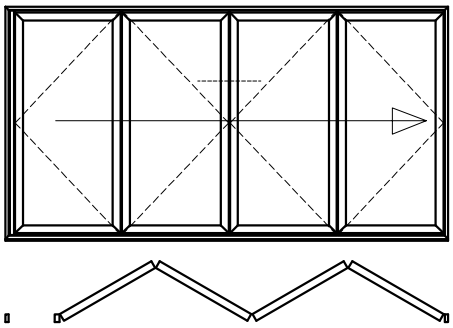

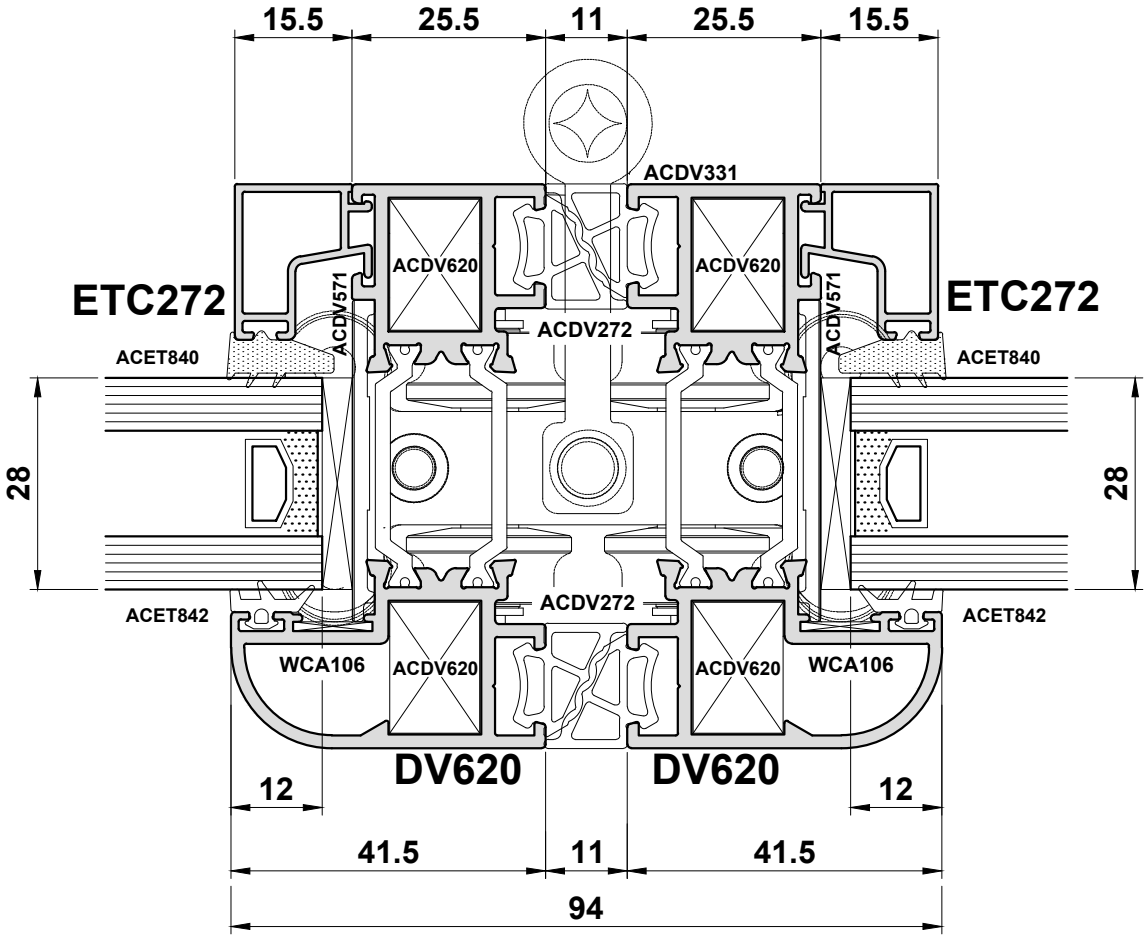

Do Not Scale From This Drawing

Open In - Detail 26

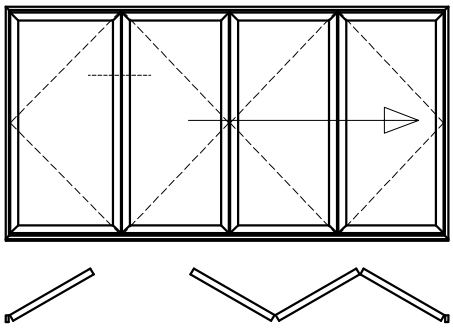

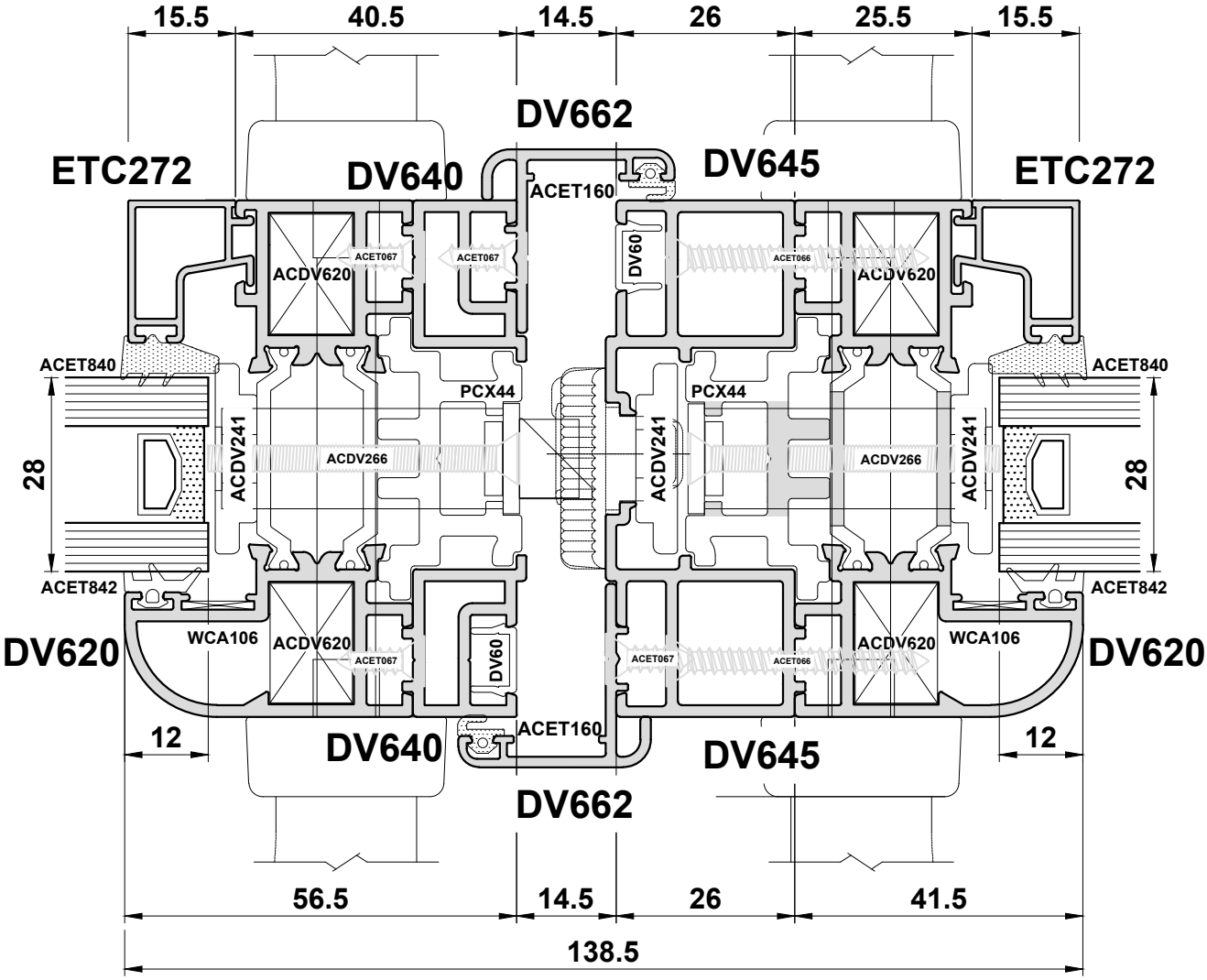

Do Not Scale From This Drawing

Open In - Detail 27

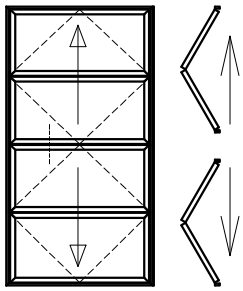

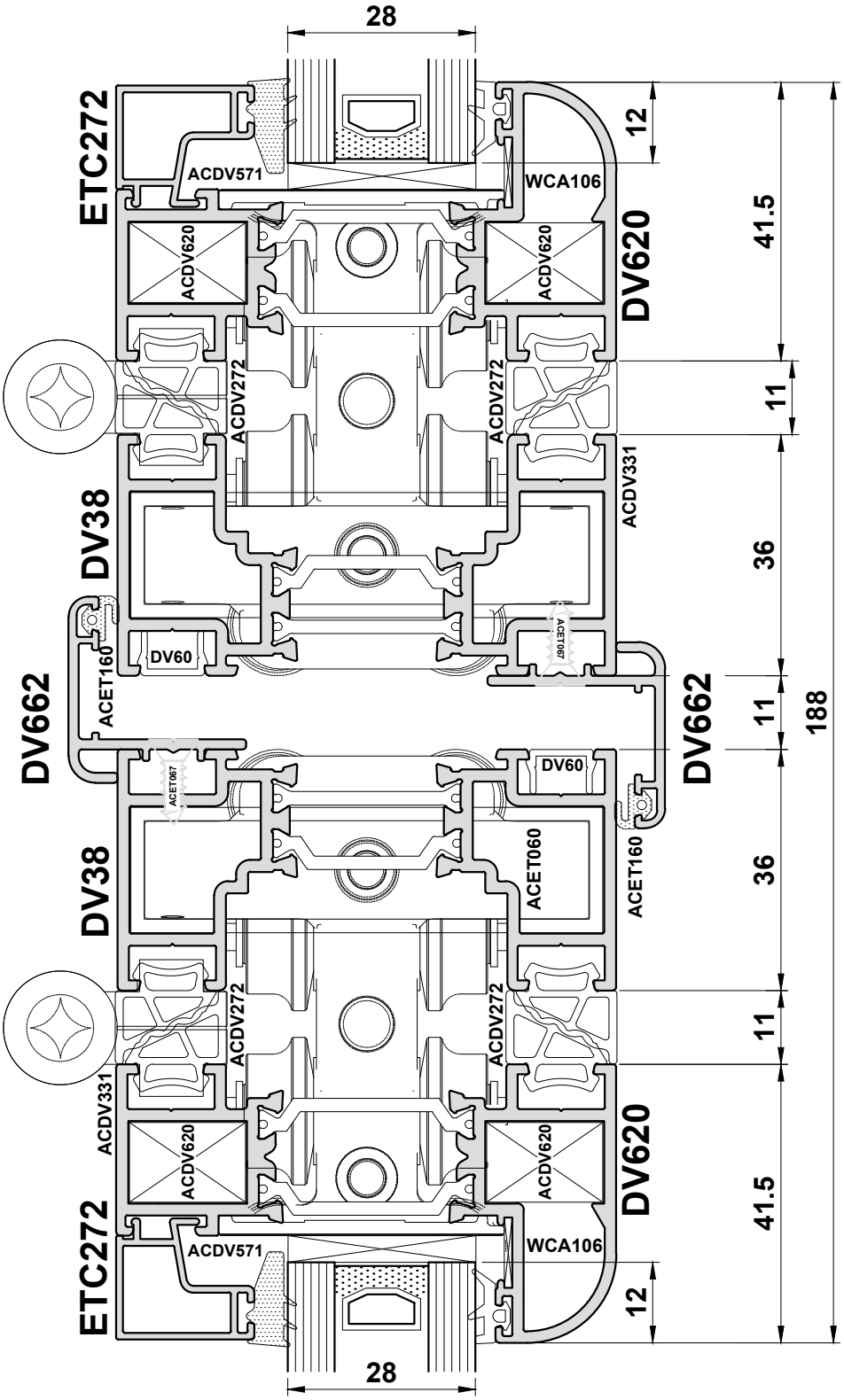

Do Not Scale From This Drawing

Open In - Detail 28

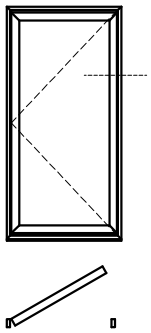

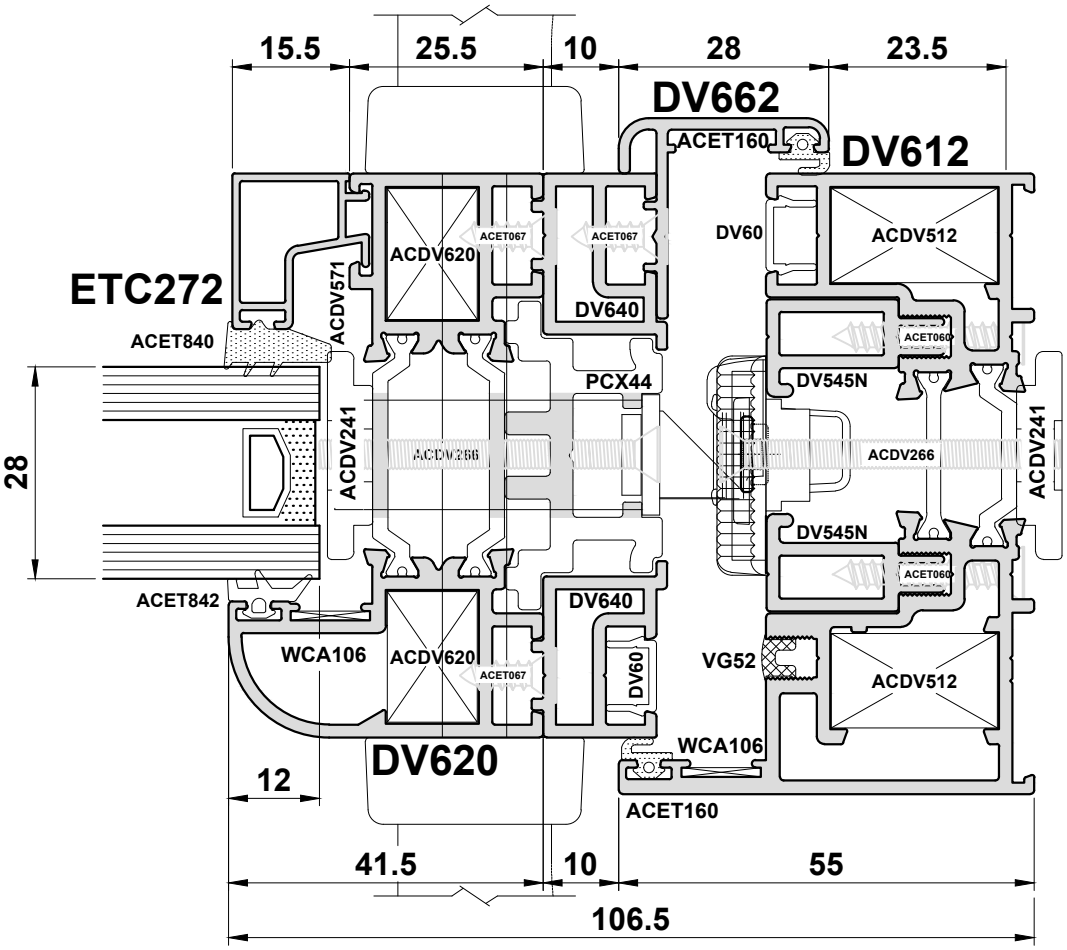

Do Not Scale From This Drawing

Open In - Detail 29

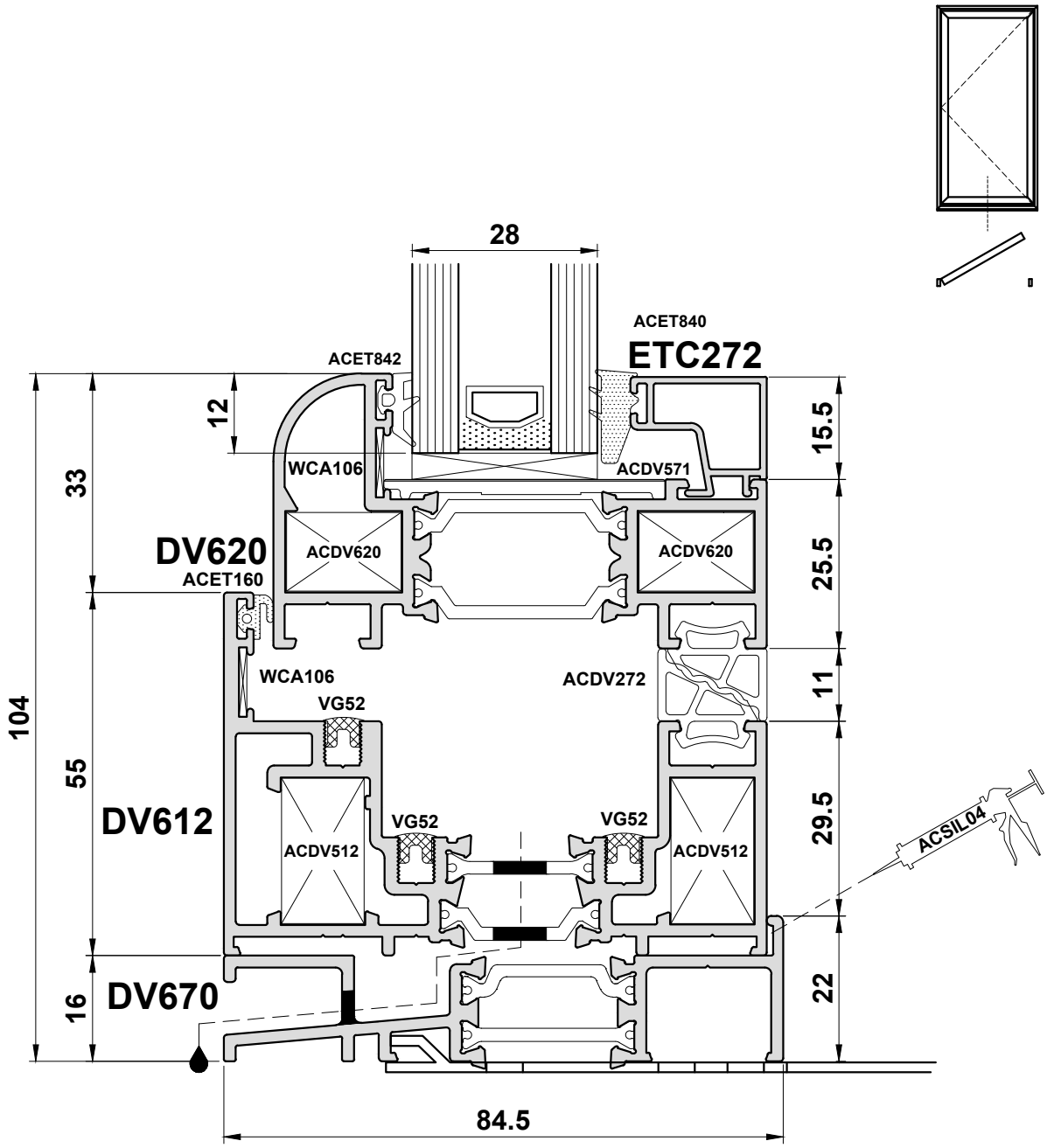

Do Not Scale From This Drawing

Open In - Detail 30

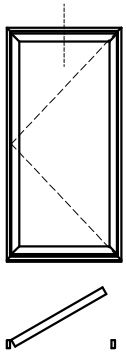

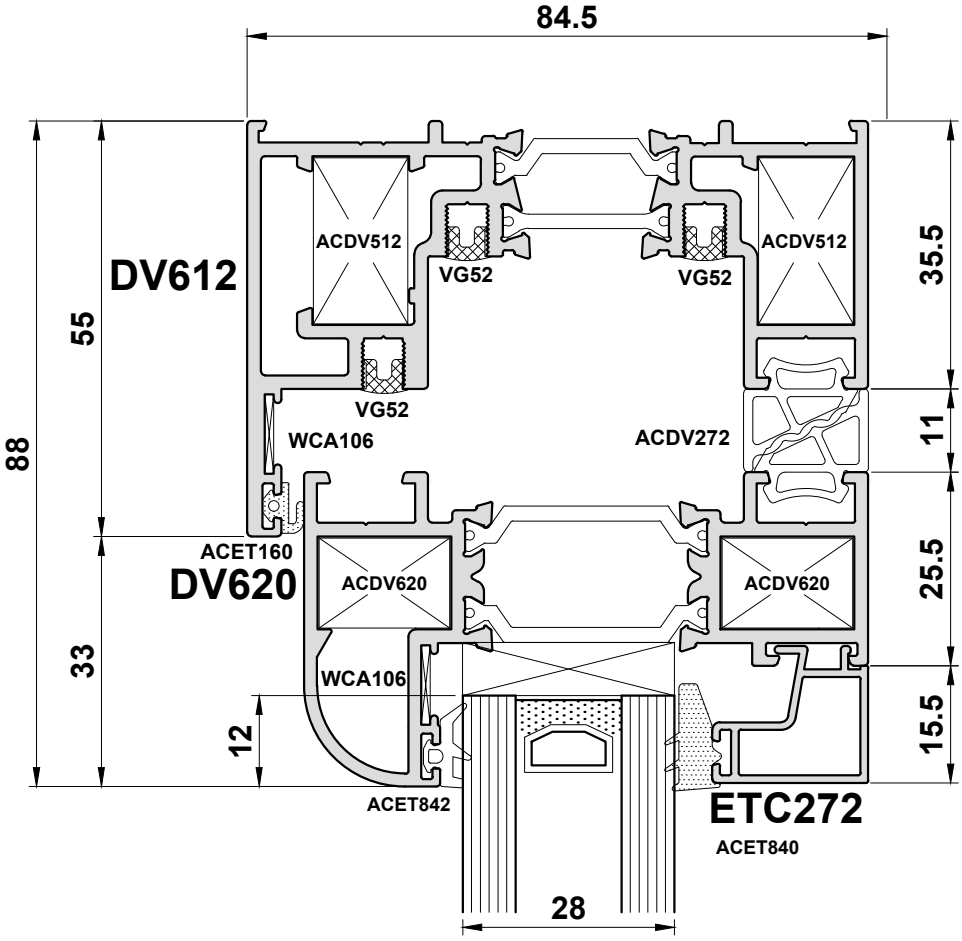

Do Not Scale From This Drawing

Open In - Detail 31

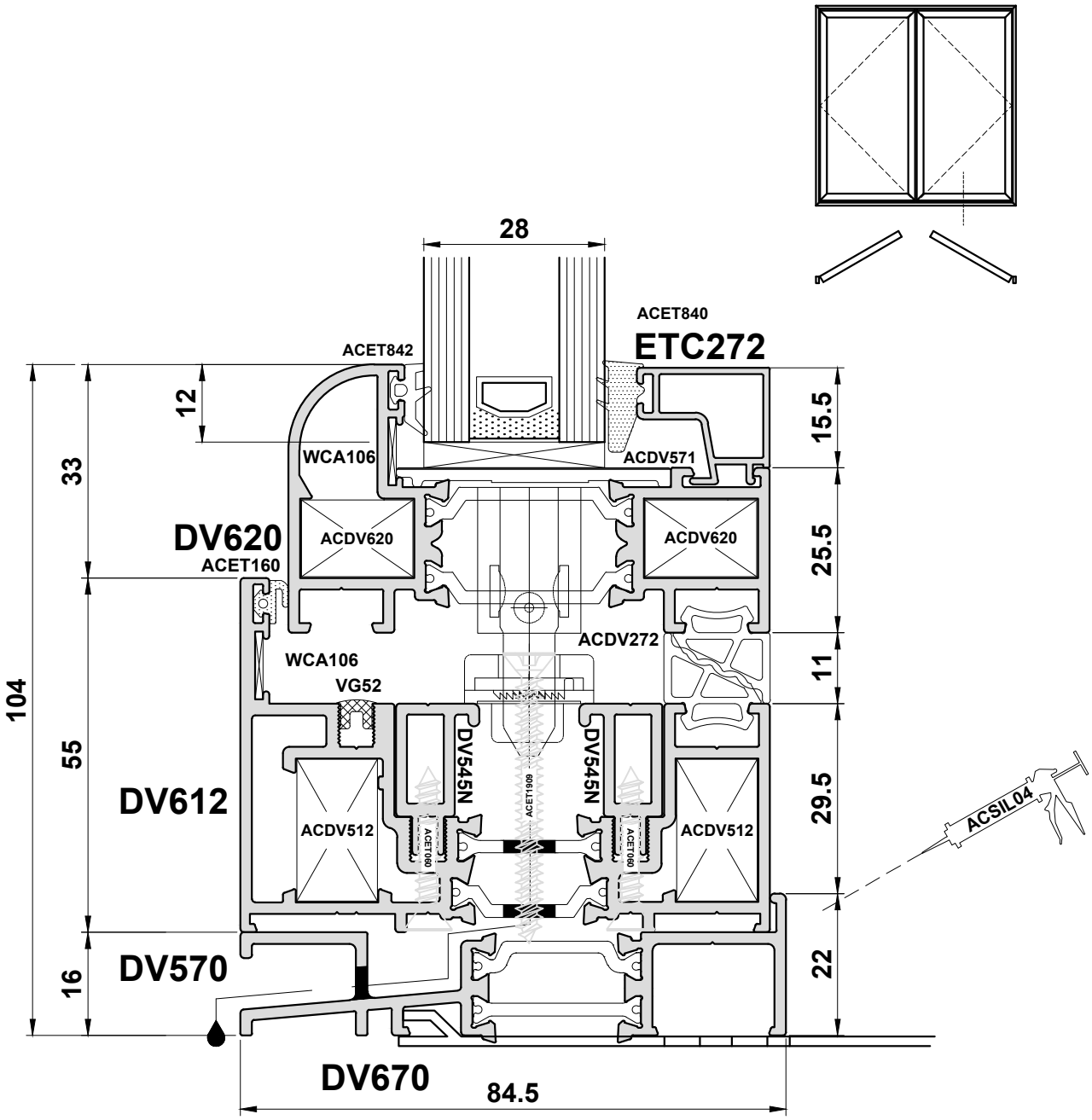

Do Not Scale From This Drawing

Open In - Detail 32

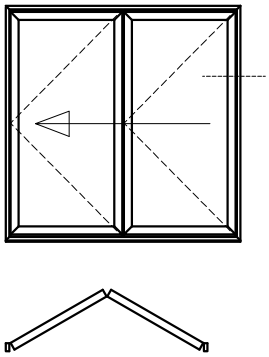

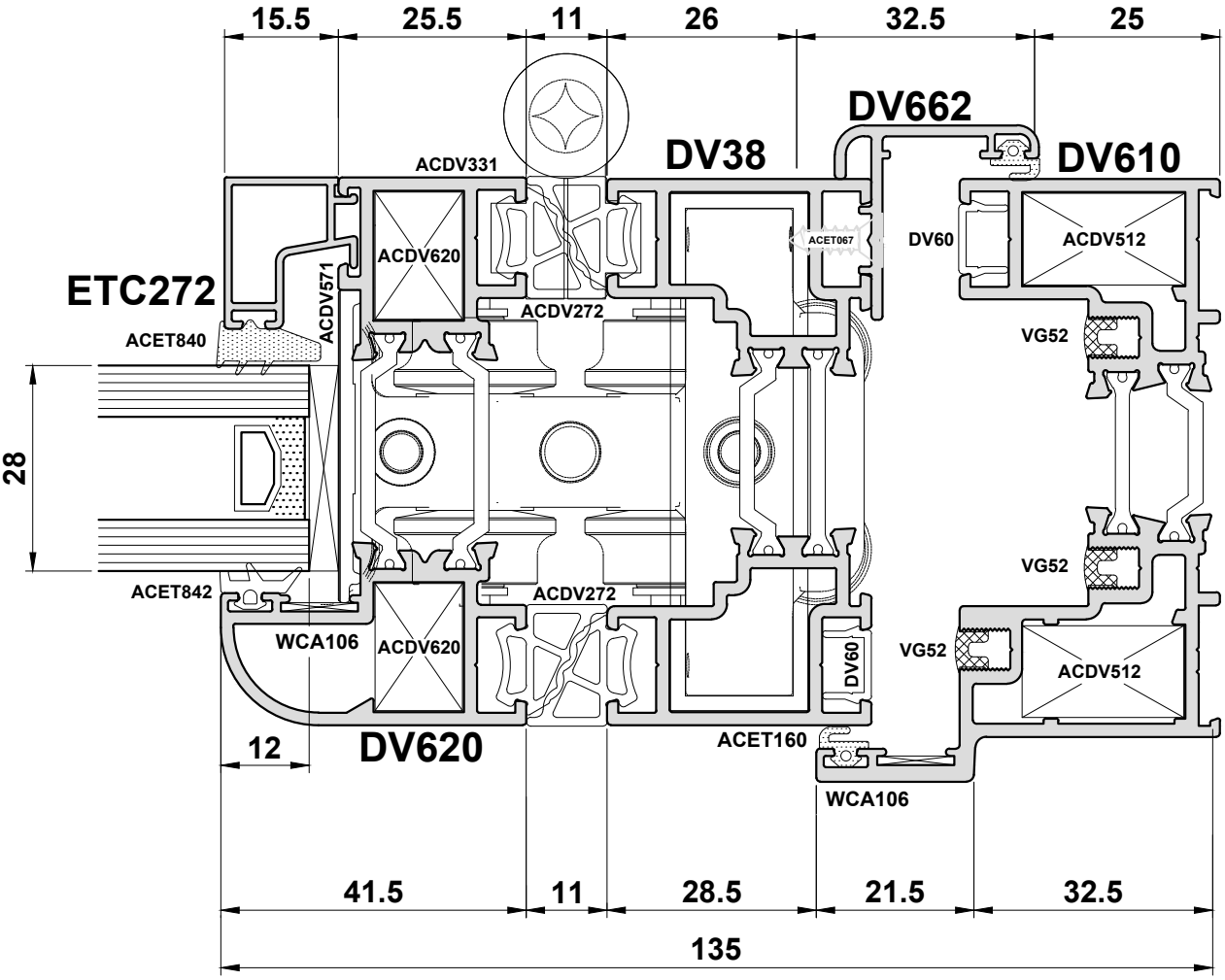

Do Not Scale From This Drawing

Section D

Statics

Section D

GENERAL INFORMATION - STATICS

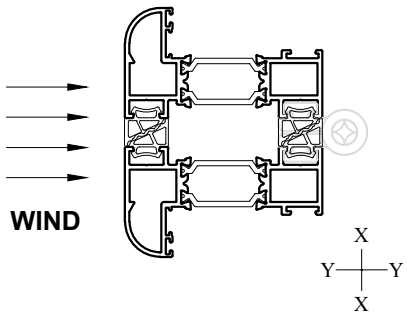

The position of the axes is an indication for the use and application of the moments of inertia (Ix and Iy) and the section modulus (Wx and Wy). We always choose the values of the axis perpendicular to the load to resist it.

- **To resist the wind loads we use the values Ix and Wx.**

EXAMPLE

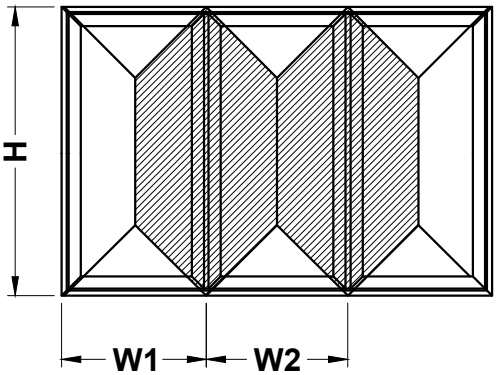

H = 220cm

W1 = 100cm

W2 = 100cm

P = 1200 Pa (wind pressure)

1) Determine Ixx value for the stiles (if required) using the Specification Wizard

Ixx = 47.5 cm4

2) Determine suitability

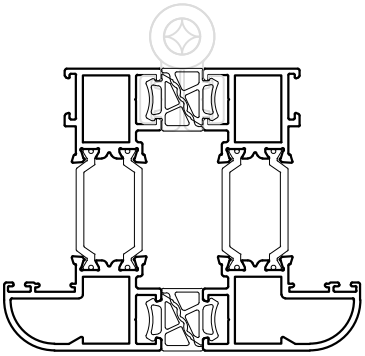

DV620 ixx = 61.7cm^4
DV622 ixx = 63.9cm^4

fmax = B/200 < 15mm
max sash weight = 100kg
max sash width = 1000mm
max sash height = 2200mm

Section E

Construction Drawings
Open Out

Section E

Corner Joint Details

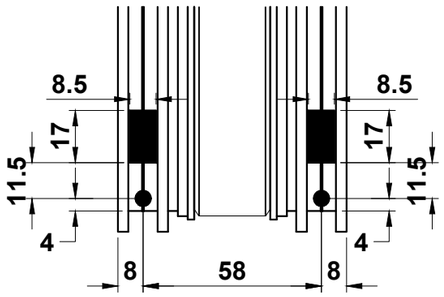

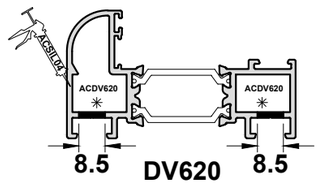

DV620

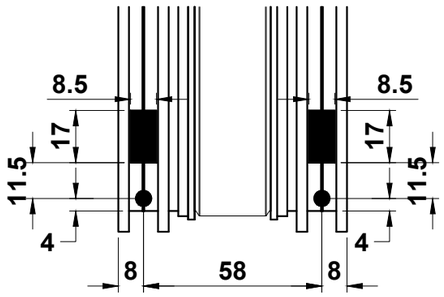

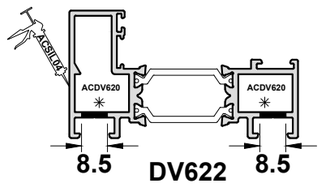

DV622

COAT CUT FACE OF PROFILE WITH ACSIL04
PRIOR TO MECHANICALLY JOINING

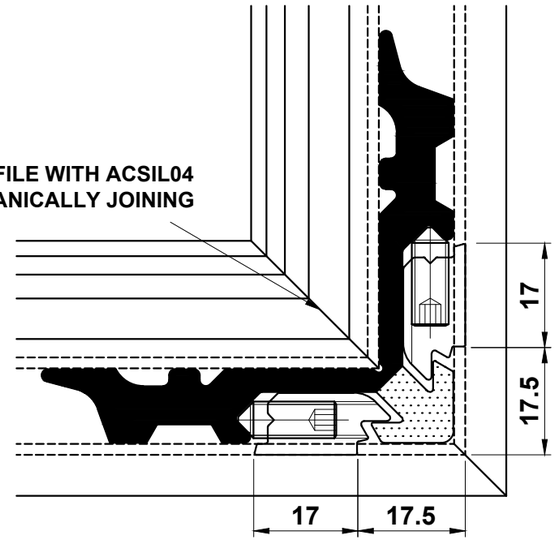

Note:
ACDV955 PUNCH TOOL MUST BE USED TO ACHIEVE CLEAT PREPARATIONS AS SHOWN.

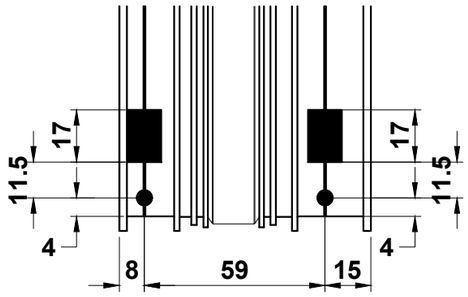

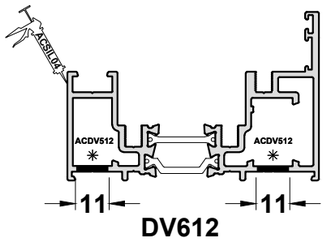

DV612

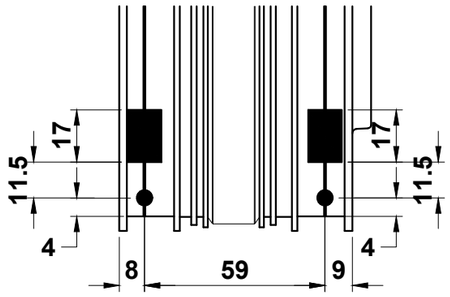

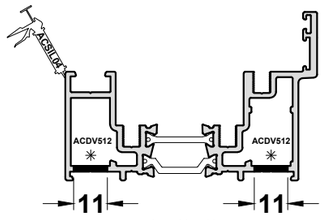

DV610

COAT CUT FACE OF PROFILE WITH ACSIL04
PRIOR TO MECHANICALLY JOINING

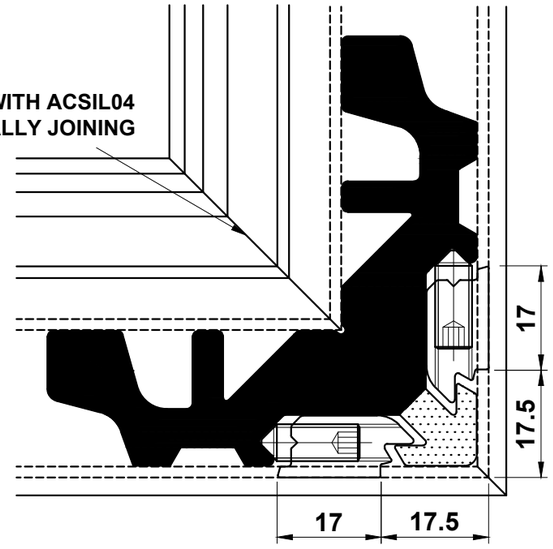

APPLY GLUE (ACSIL013) TO CLEAT APERTURE MARKED ✳

Do Not Scale From This Drawing

Drainage

Important Note:
The drainage details shown below are a minimum requirement. The quantity of drainage slots shall be increased as required to suit specific site requirements.
All visofold 6000 doors must have either a flush cill (DV570/DV670) or extruded sub cill as detailed.

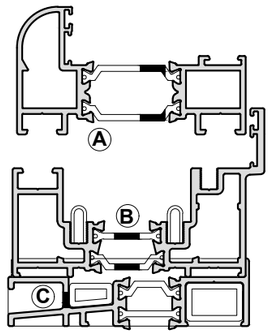

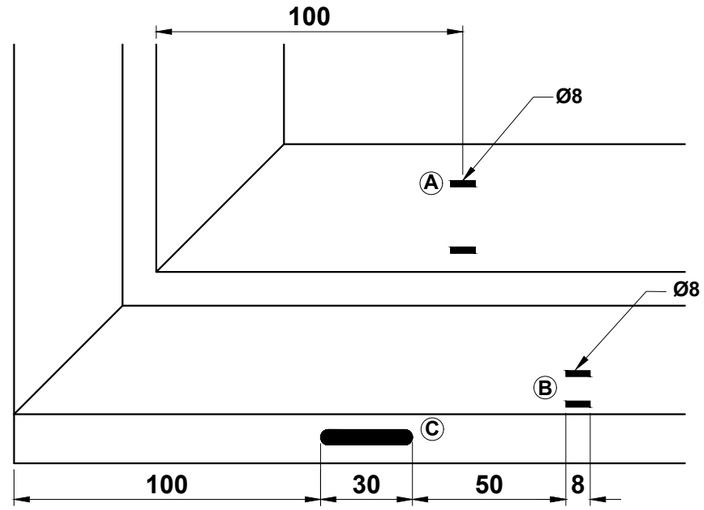

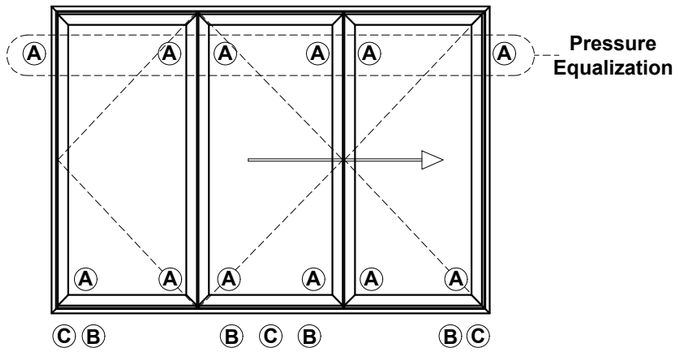

Note:
For DV670 please use ACDV670 end caps.

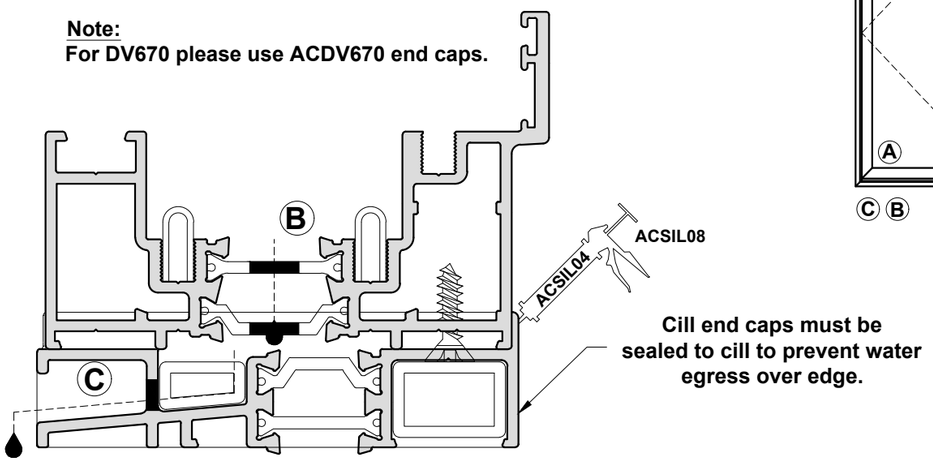

Cill end caps must be sealed to cill to prevent water egress over edge.

DV570 Shown with ACDV570 end cap

ETC451
85mm Cill

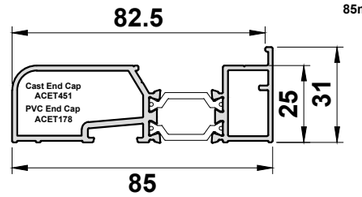

ETC452
135mm Cill

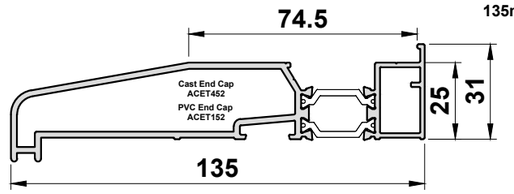

ETC457
150mm Cill

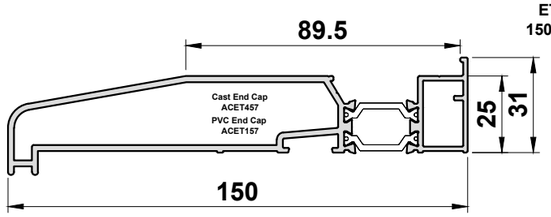

ETC458
190mm Cill

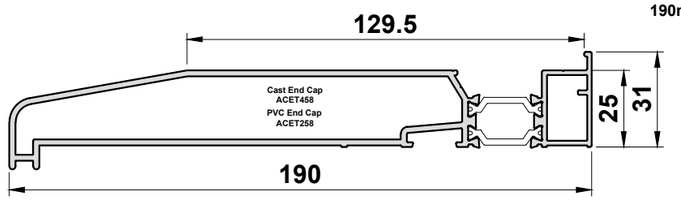

ETC479
225mm Cill

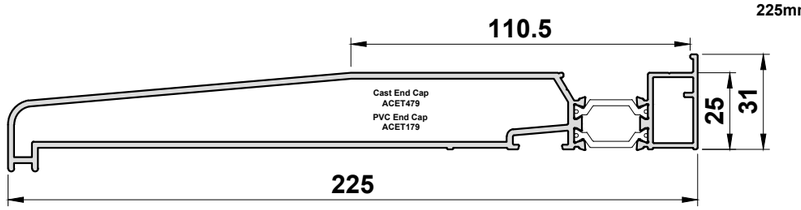

Please see Page E05 for cill drainage details.

Do Not Scale From This Drawing

Drainage

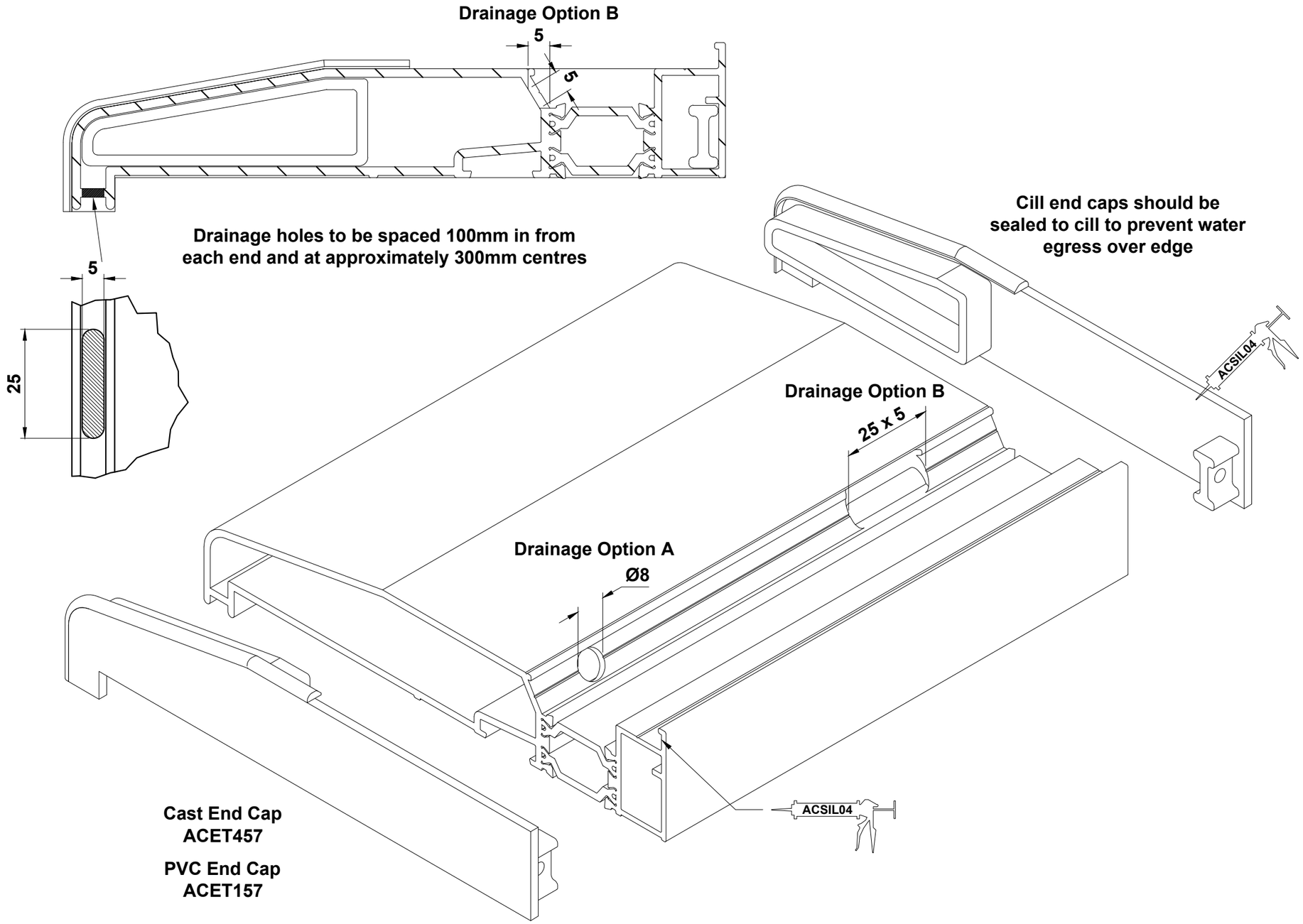

Do Not Scale From This Drawing

DV545N & ACDV567 Hinge Installation

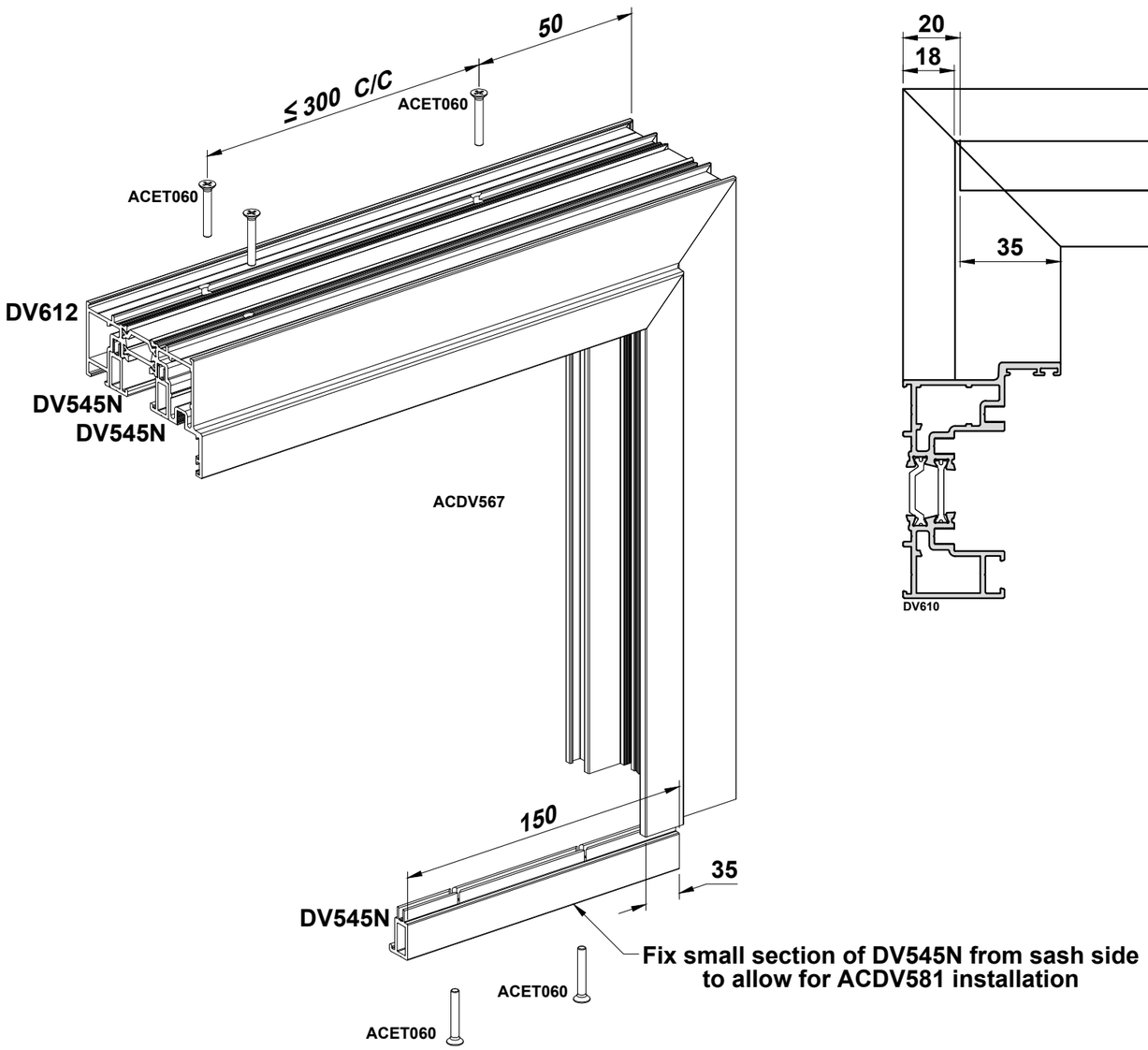

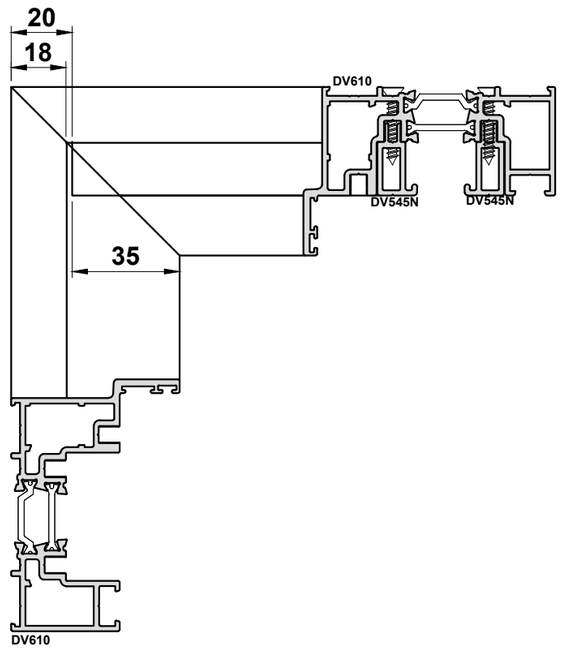

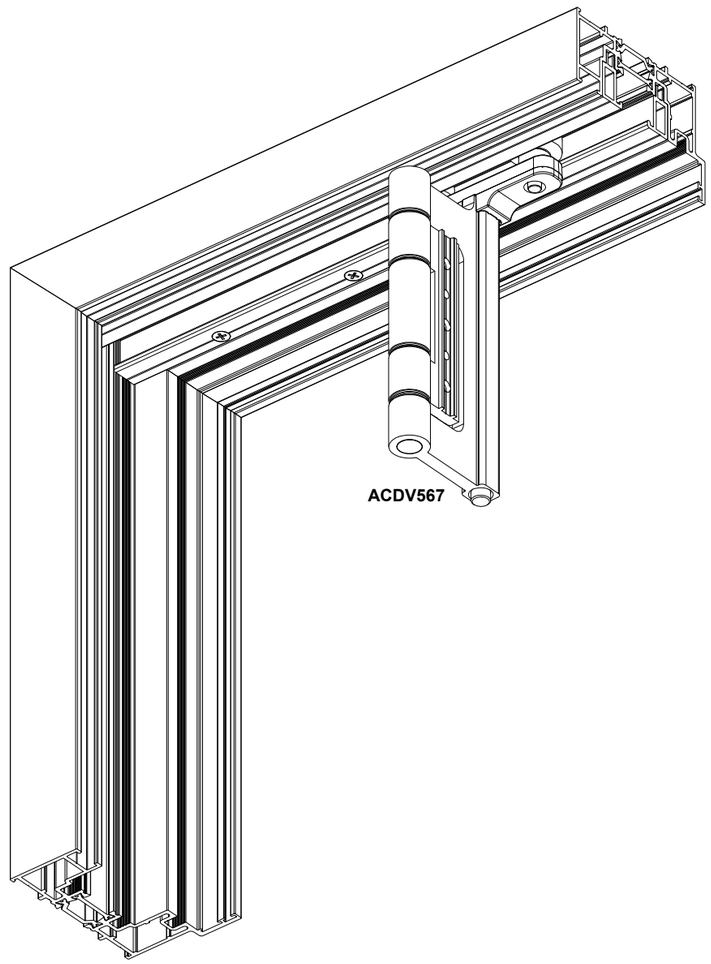

Do Not Scale From This Drawing

ACDV567 Top guide.

* Tapping plates MUST be inserted prior to frame assembly.

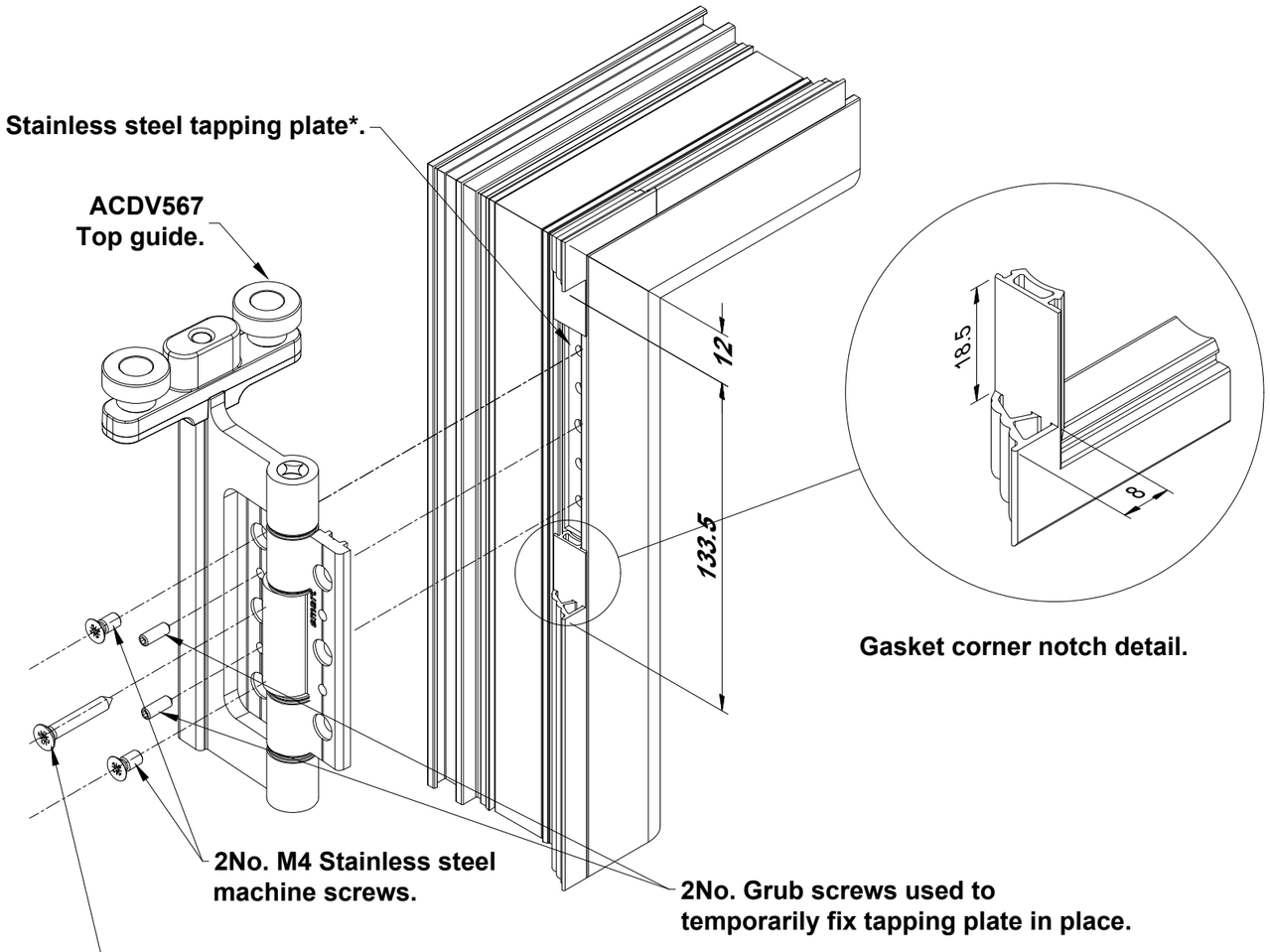

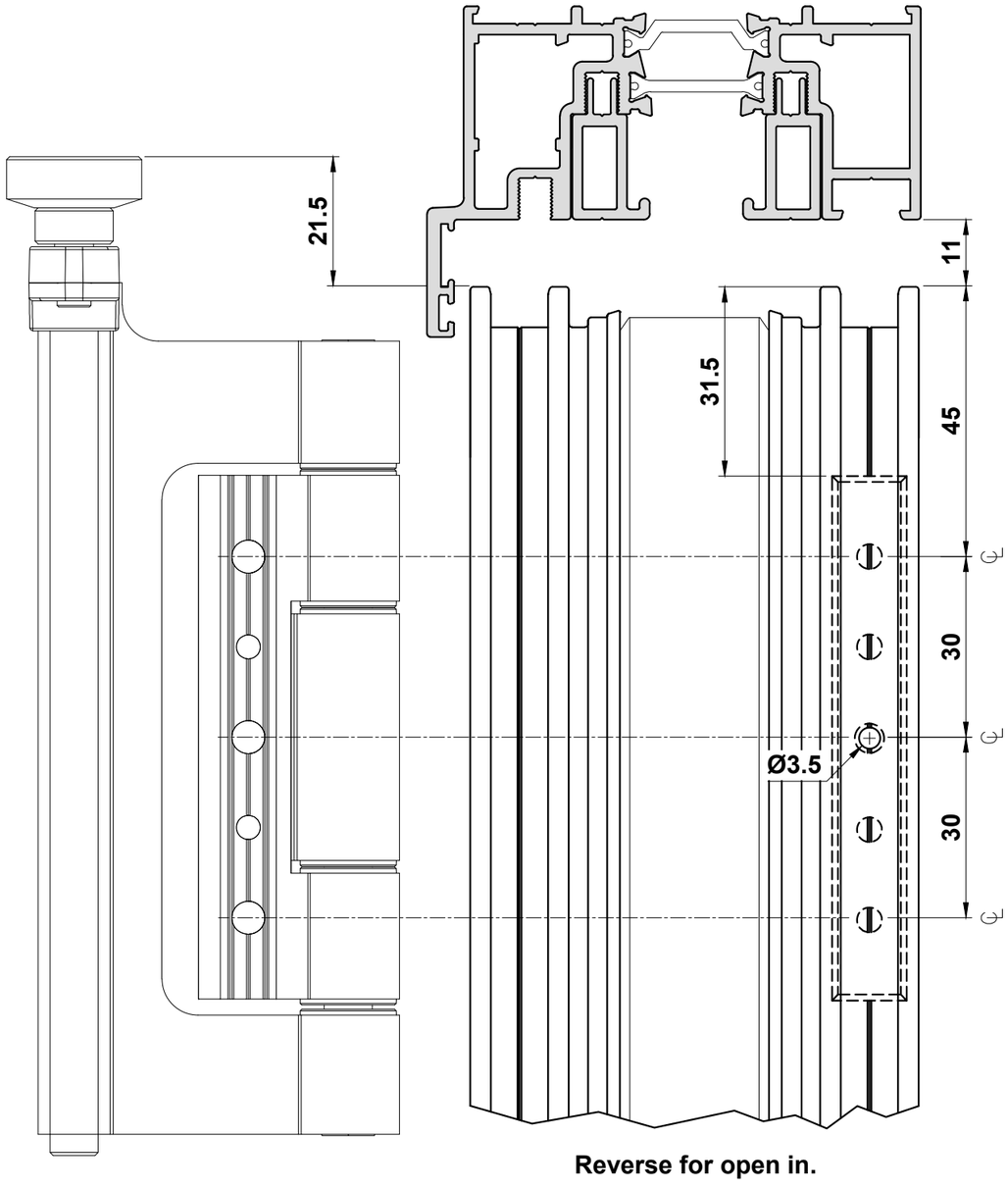

Do Not Scale From This Drawing

ACDV566 Bottom Carrier.

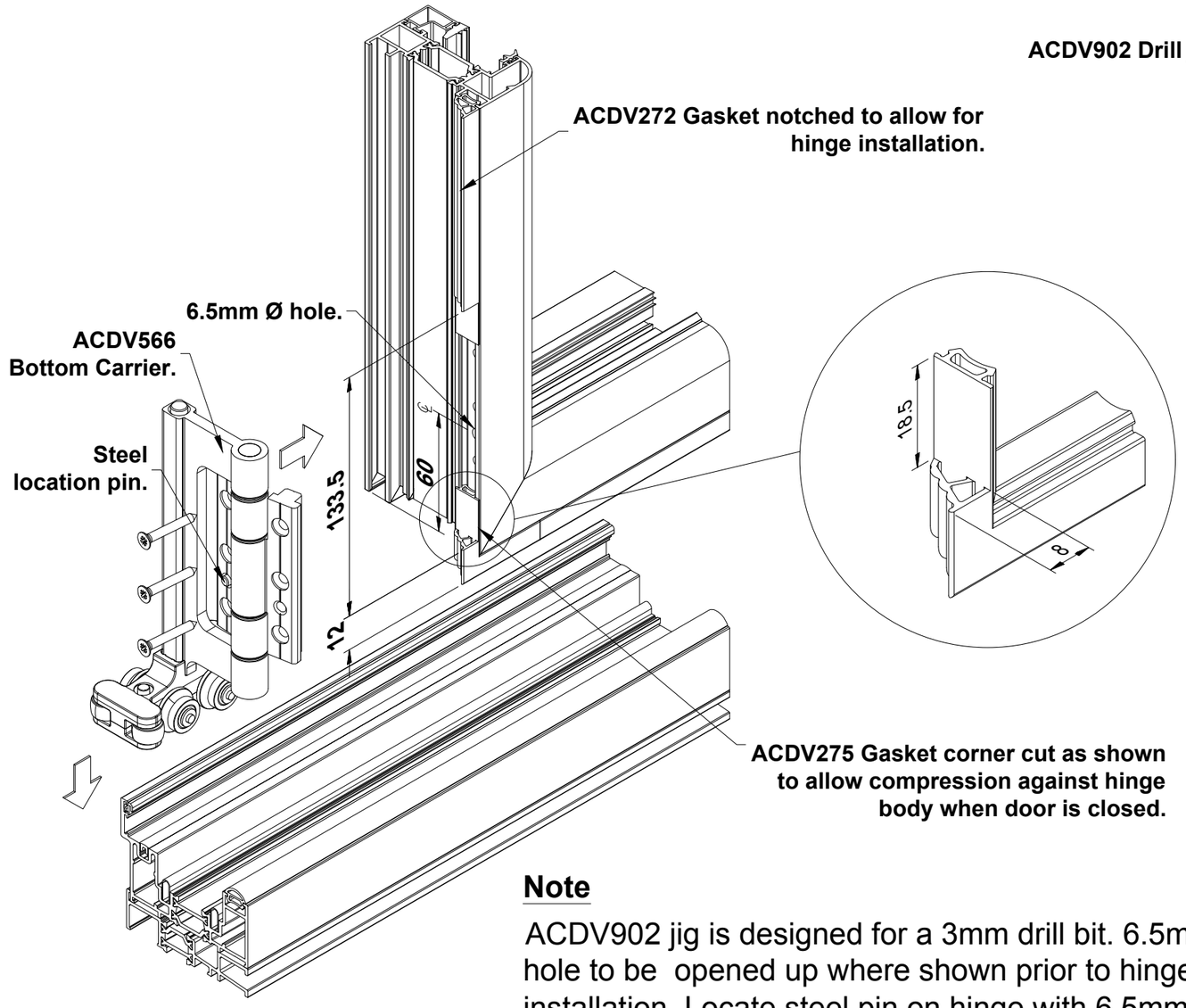

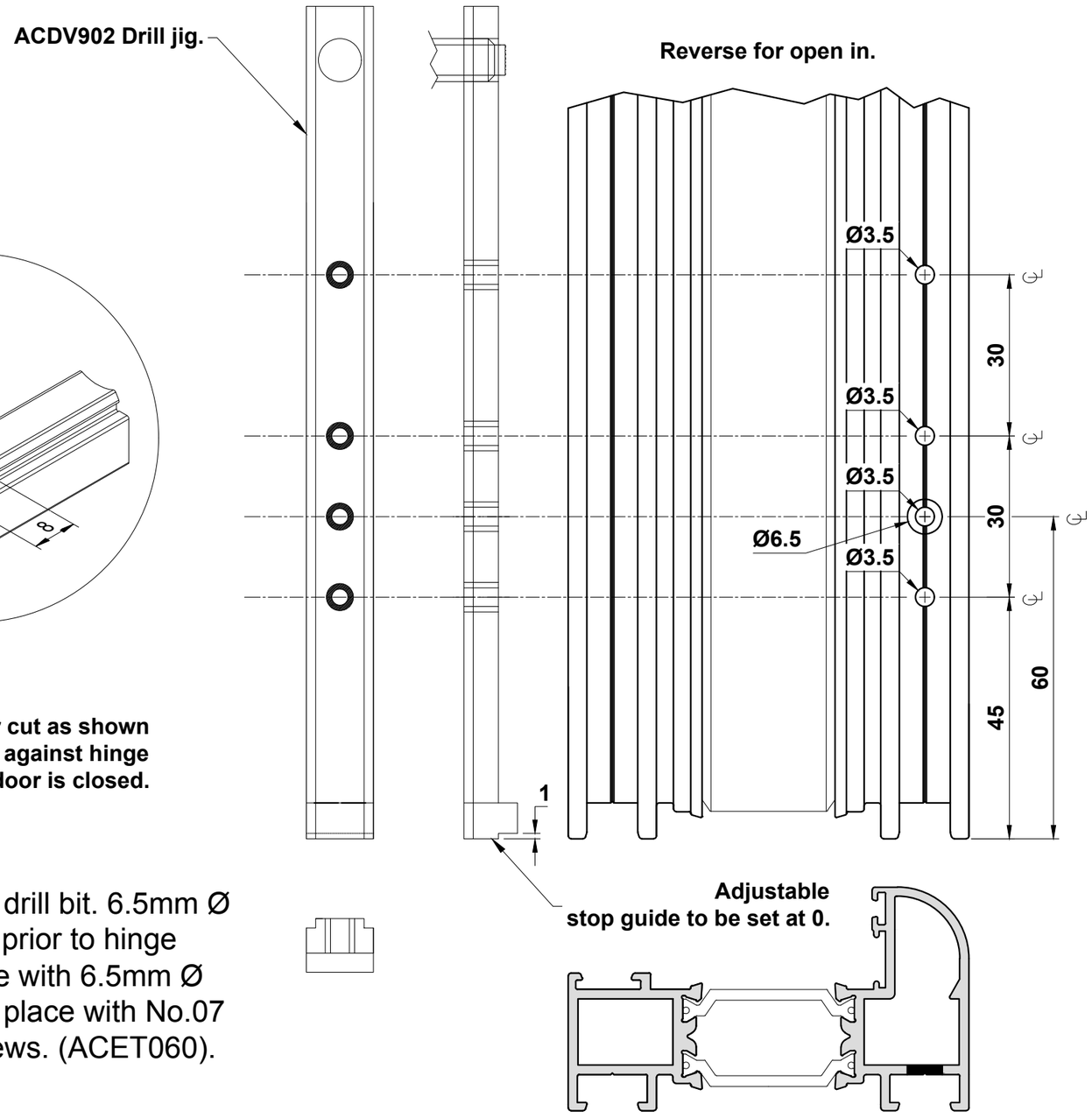

Note

ACDV902 jig is designed for a 3mm drill bit. 6.5mm Ø hole to be opened up where shown prior to hinge installation. Locate steel pin on hinge with 6.5mm Ø hole and proceed to secure hinge in place with No.07 stainless steel CSK self tapping screws. (ACET060).

Do Not Scale From This Drawing

ACDV576 & ACDV577 Preparation with ACDV251 & ACET486 Handle

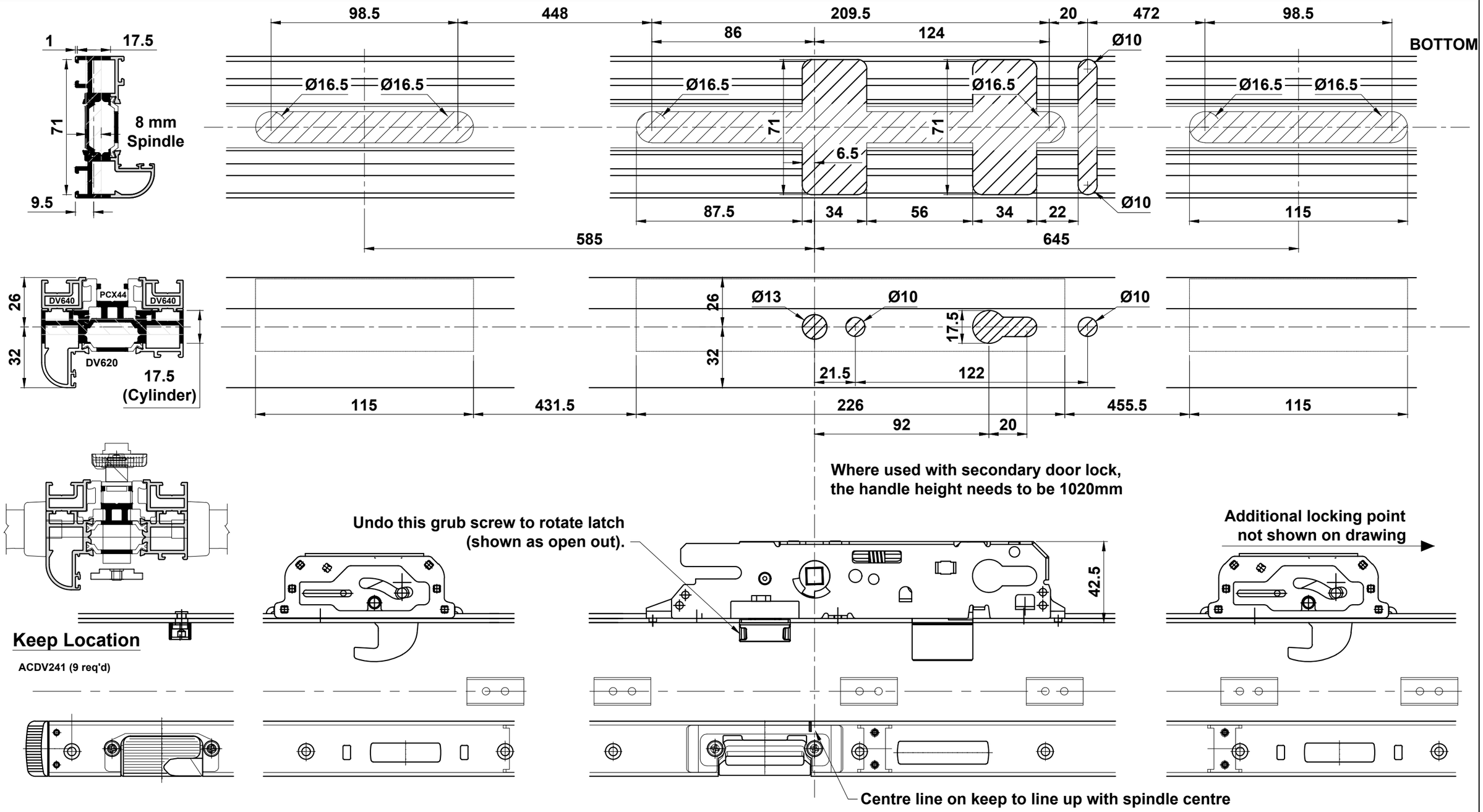

Do Not Scale From This Drawing

ACDV624 & ACDV625 Prep in DV620 & DV622

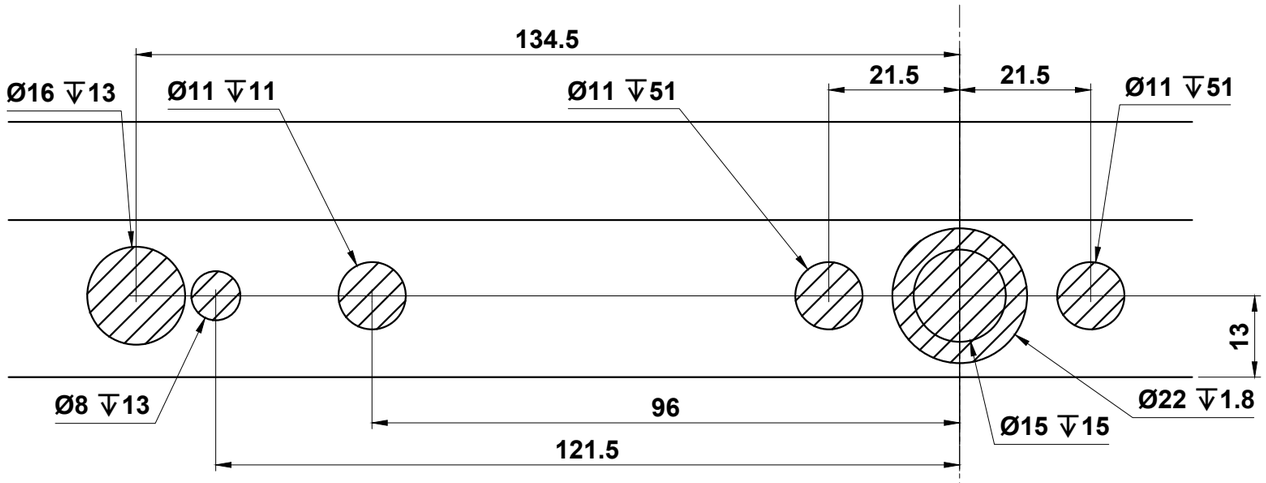

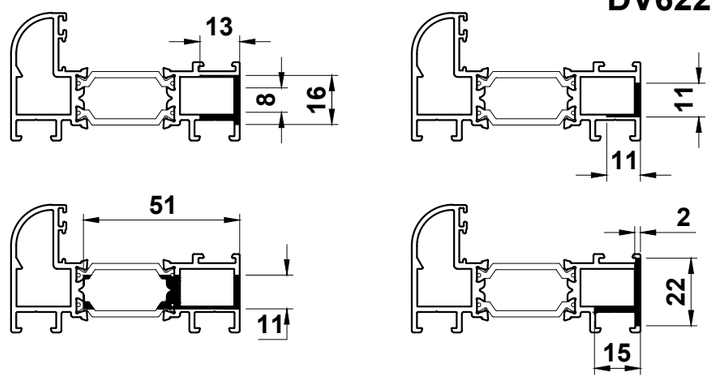

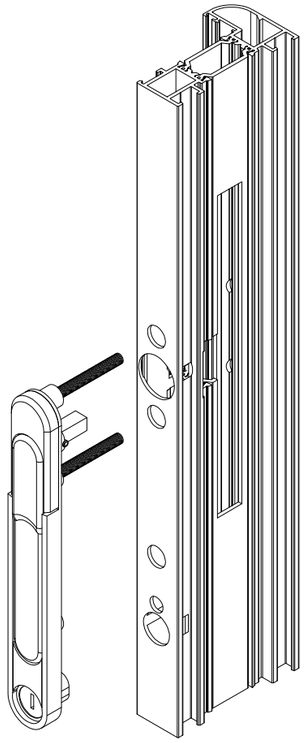

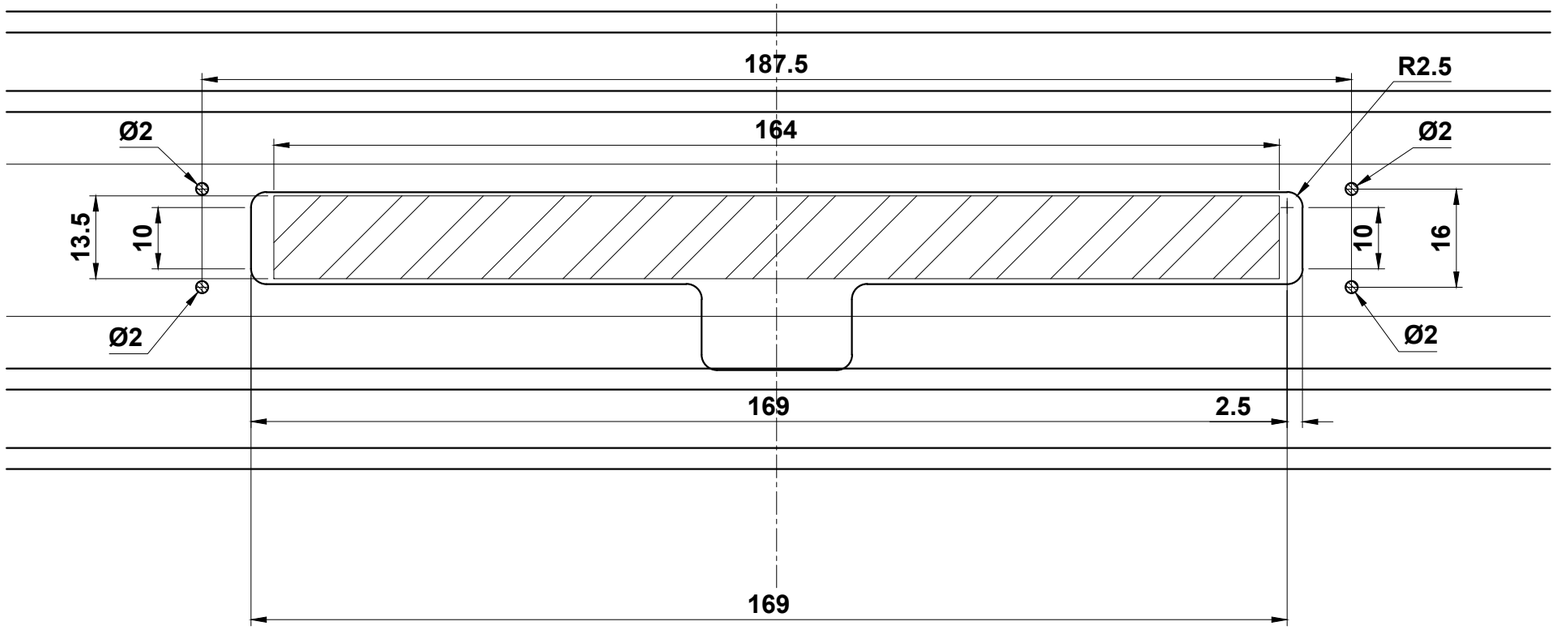

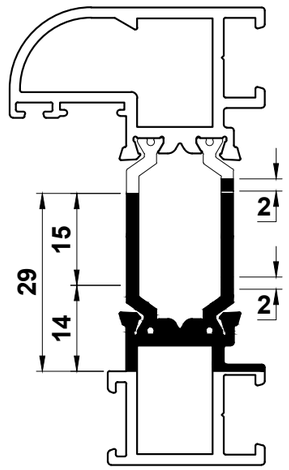

ACET688 Shoot bolt keep location and assembly.

Open out double swing door.
Viewed from Outside.

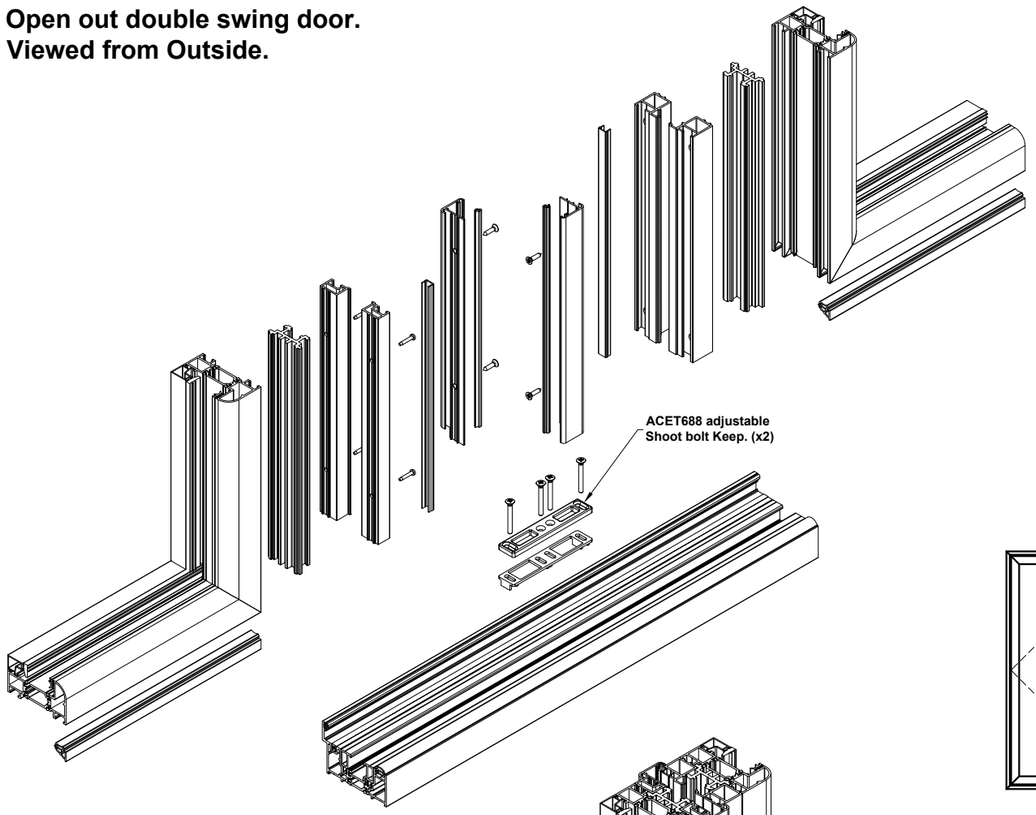

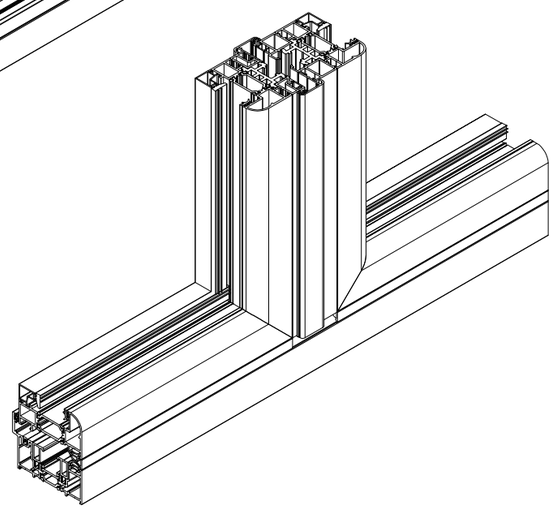

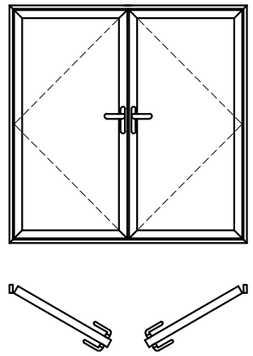

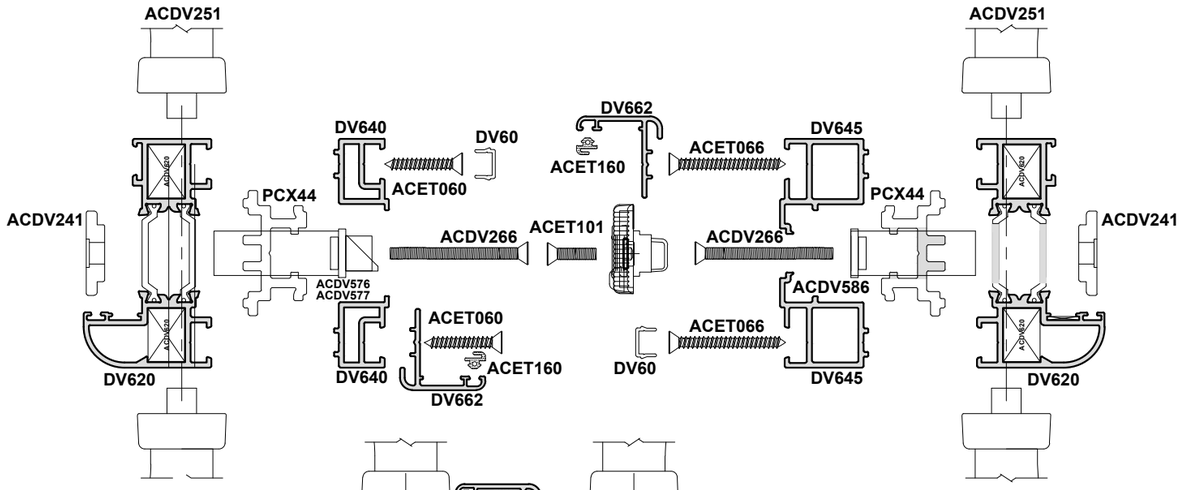

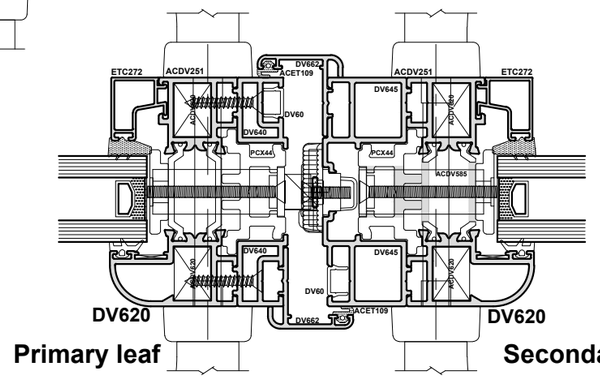

Primary leaf **Secondary leaf.**

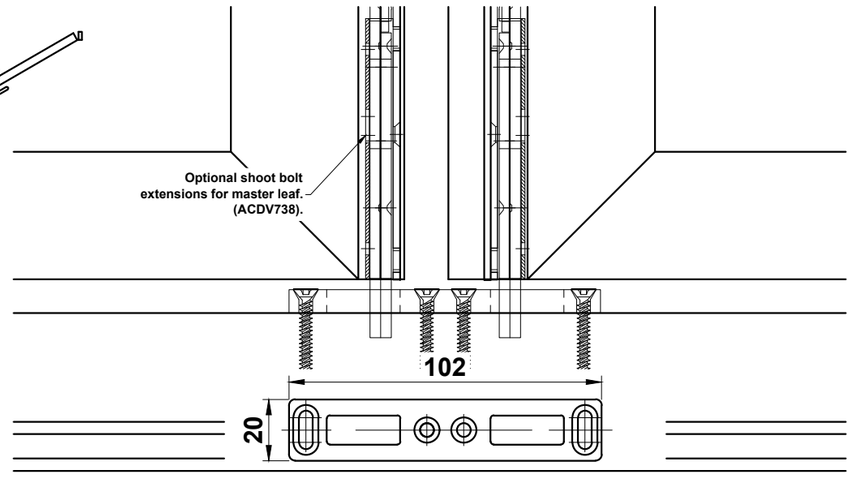

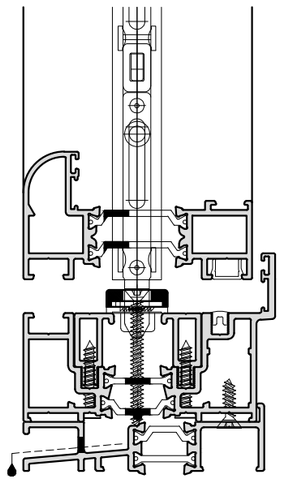

ACDV585 Secondary Door Lock.

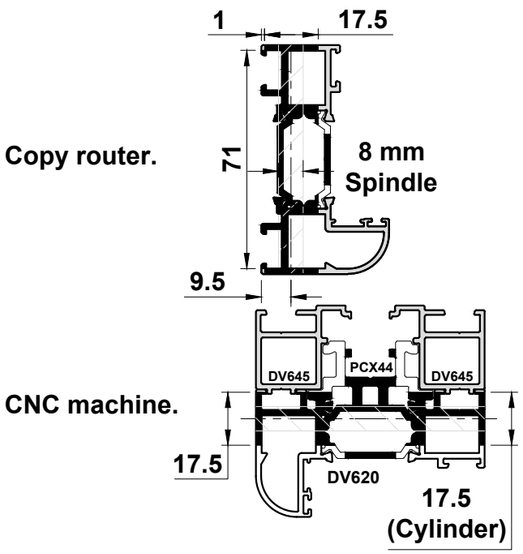

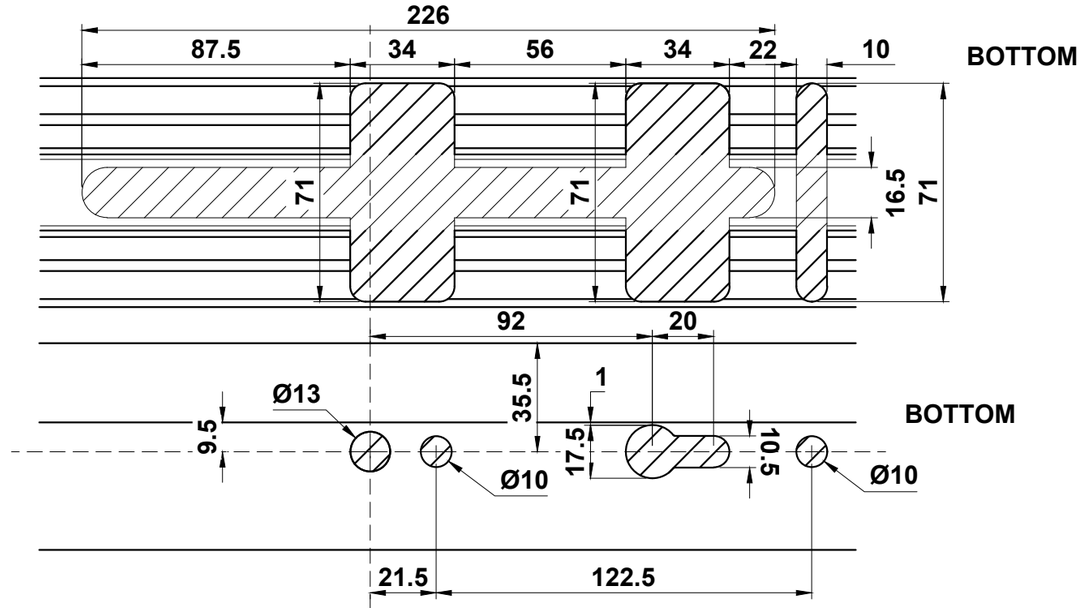

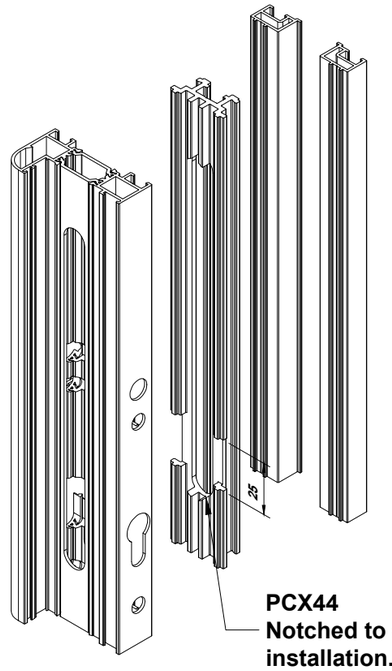

PCX44
Notched to allow cylinder installation.

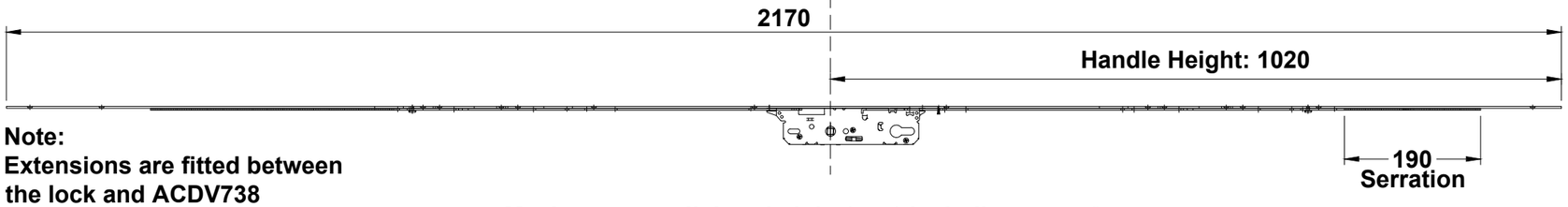

BOTTOM

Note:
Extensions are fitted between the lock and ACDV738 shoot bolt.

Maximum overall door height (mm) including outer frame:

Without Extension	ACDV742 200mm Extension	ACDV744 400mm Extension
2229	2429*	2629*

DV610/DV612 Standard Threshold

*Maximum sash height is 2200mm. Sizes shown here only indicate sizes with extensions.
**Minimum cut off positions are required to fit the shoot bolts.

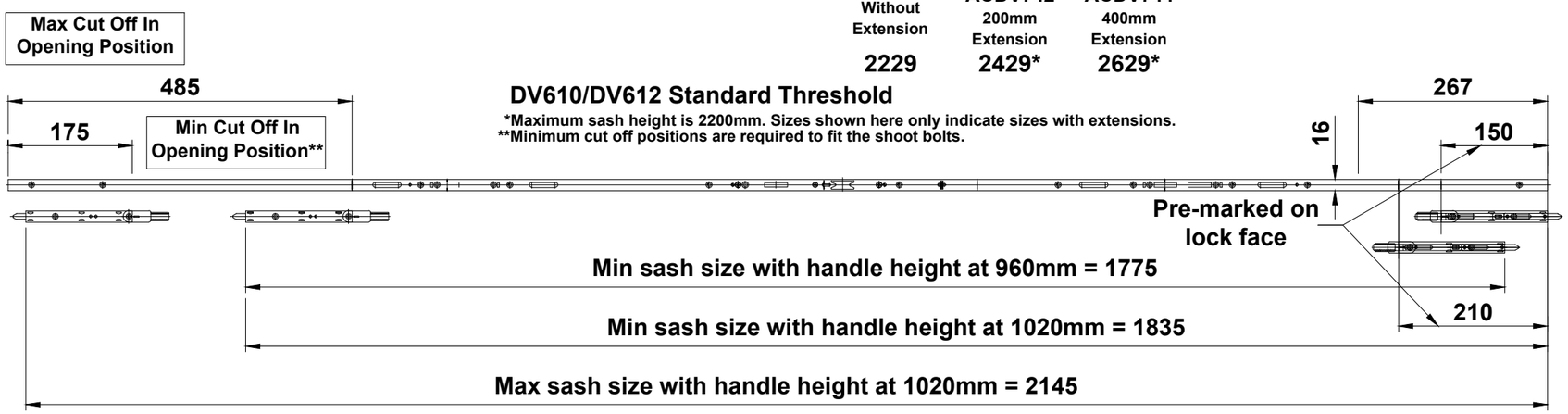

Max Cut Off In Opening Position

Min Cut Off In Opening Position**

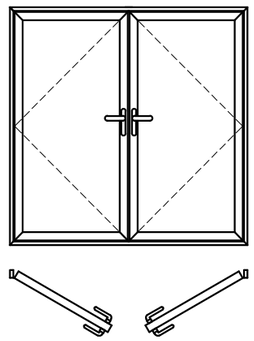

Do Not Scale From This Drawing

ACDV663 Shootbolt Preparation with ACDV226 Handle

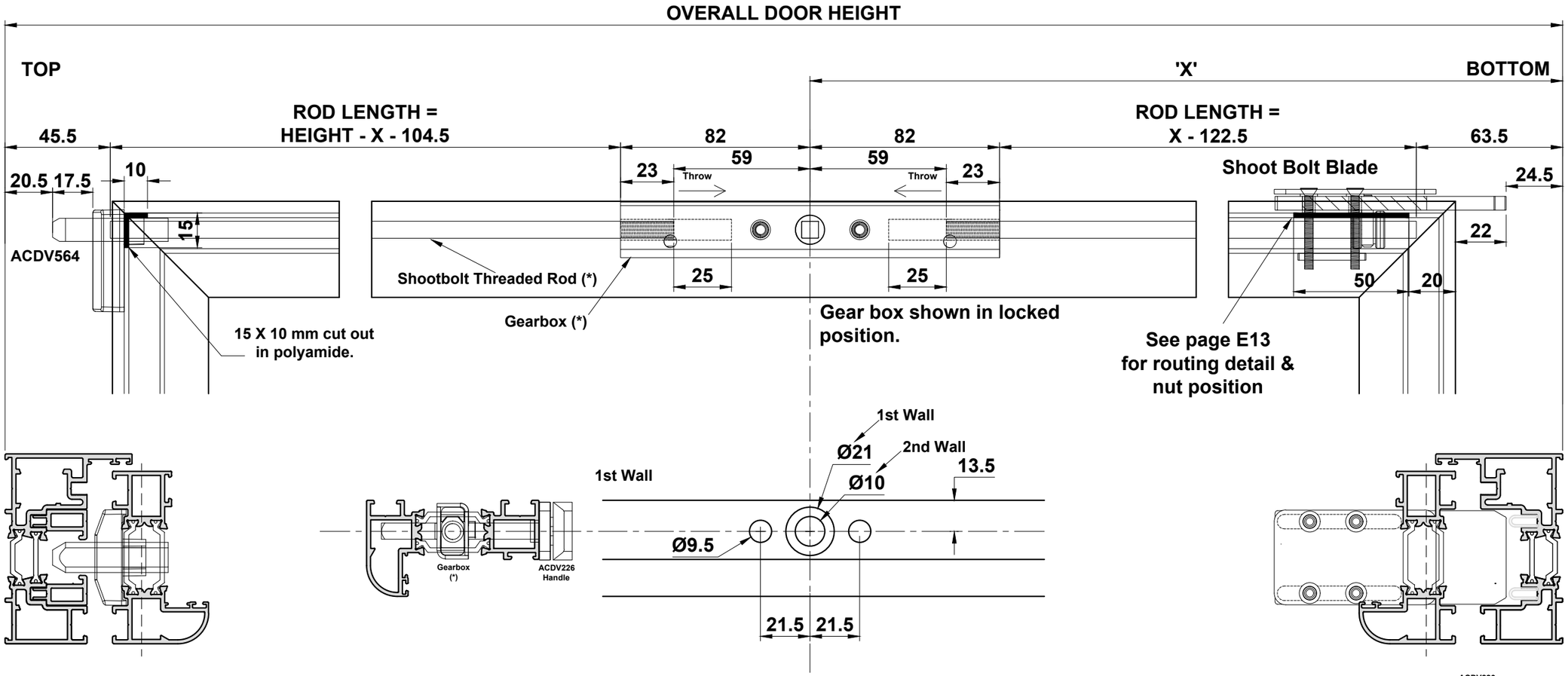

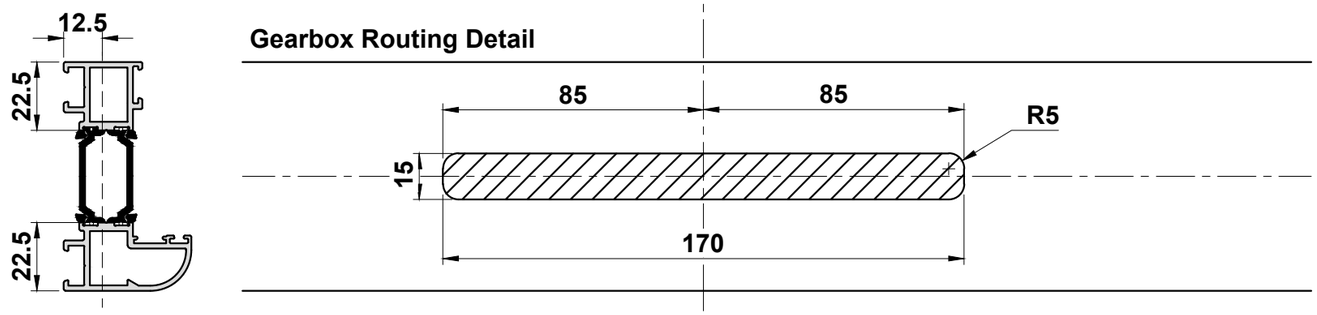

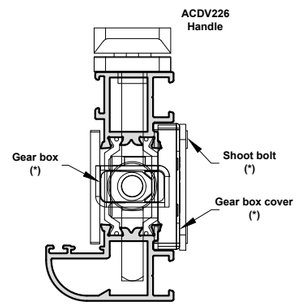

(*) Included in ACDV663 Kit

ACDV663 Kit Contains:

1 x Gearbox
1 x Gearbox Cover
2 x Shootbolt Threaded Rods
1 x Shootbolt Blade
1 x Shootbolt Blade Guide
1 x Shootbolt Tip
1 x Shootbolt Fixing Plate

Do Not Scale From This Drawing

ACDV663 Shootbolt Blade Detail

Installation Steps:

1. Screw the bottom threaded bar into the gearbox and feed into the section through the slot
2. Adjust drive nut to the position shown below
3. Place shootbolt blade over the nut ensuring the fork of the blade is either side of the nut
4. Place the stainless steel plate over the blade and secure in position using M4x30 into fixing plate

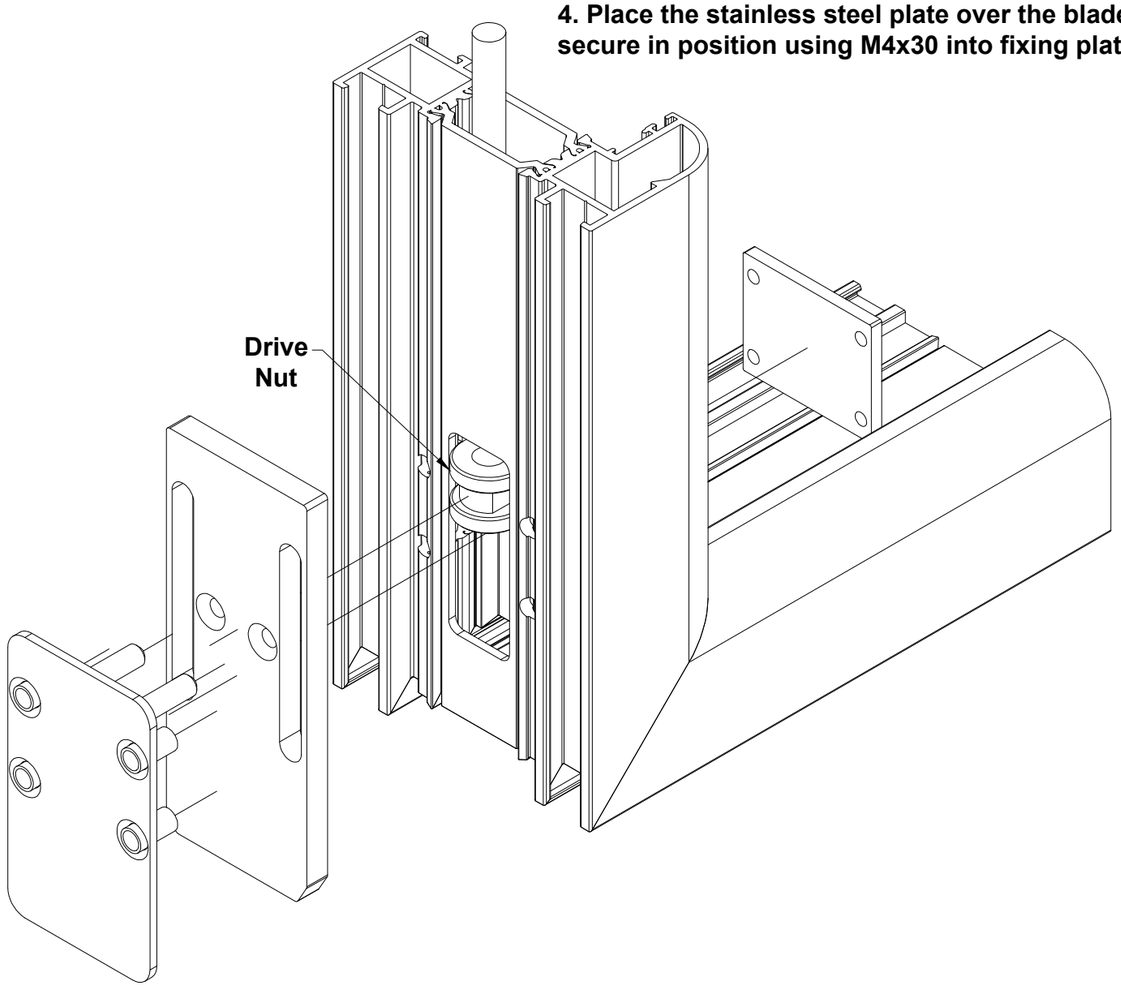

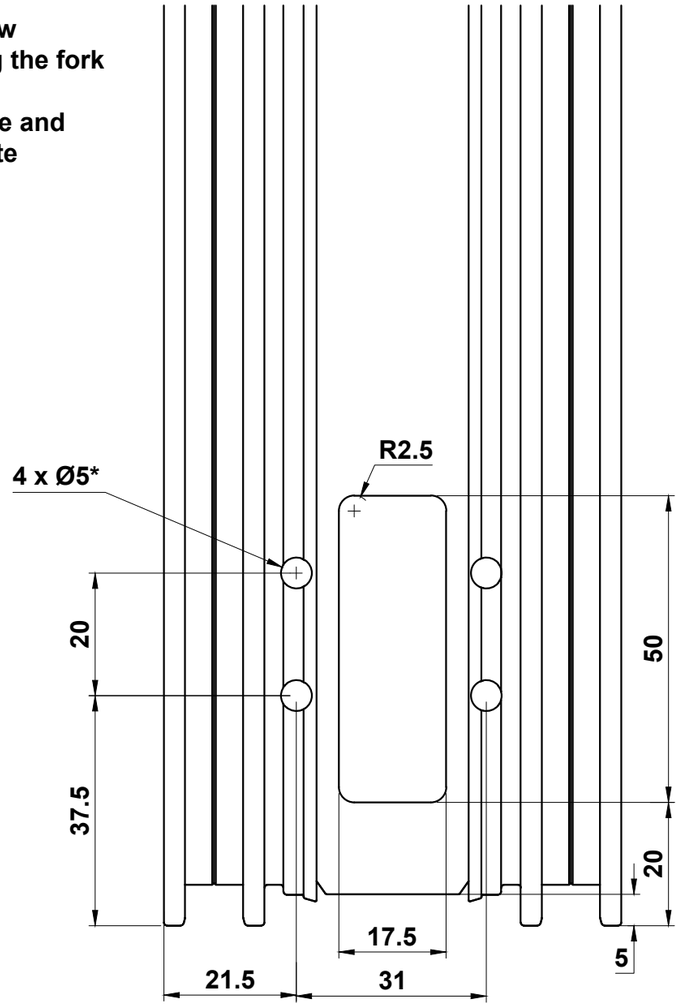

*These 4 holes are positioned inline with the section wall. We therefore recommended using a router.

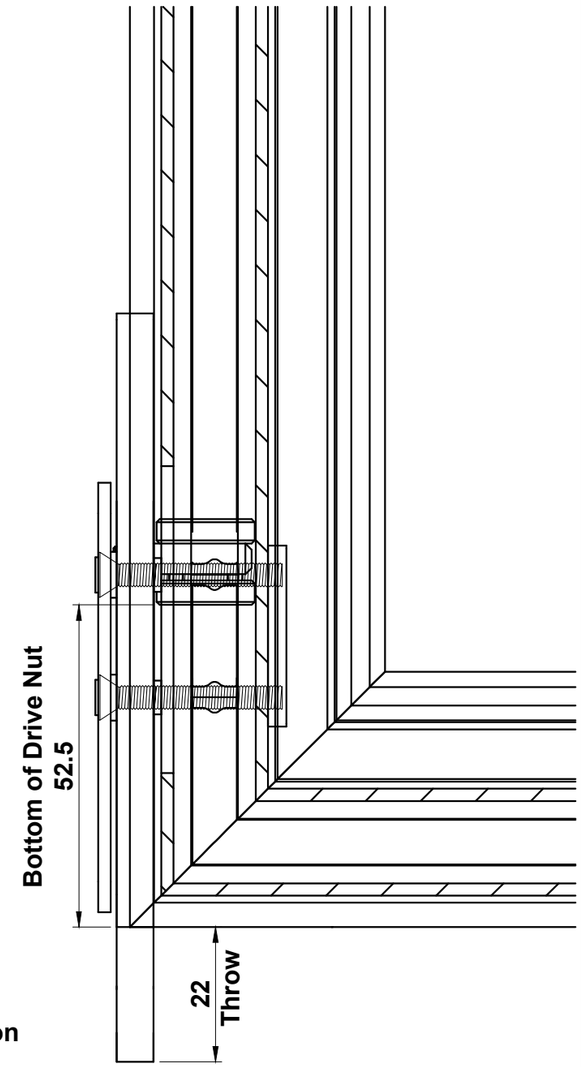

Do Not Scale From This Drawing

Rebate Adapter End Caps.

Primary door.

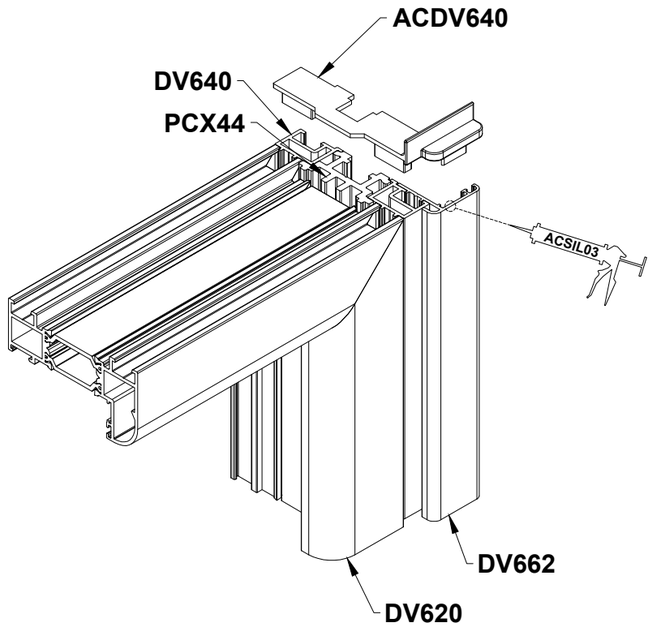

Secondary door.

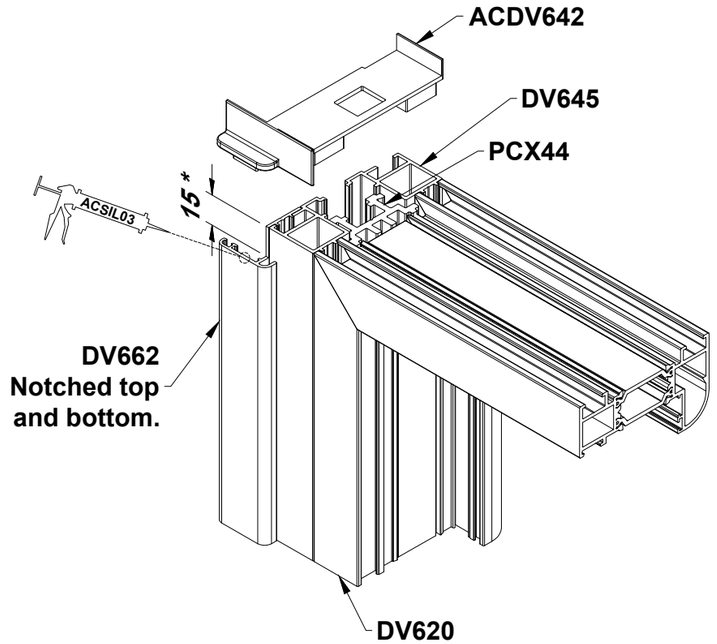

Rebate adapter.

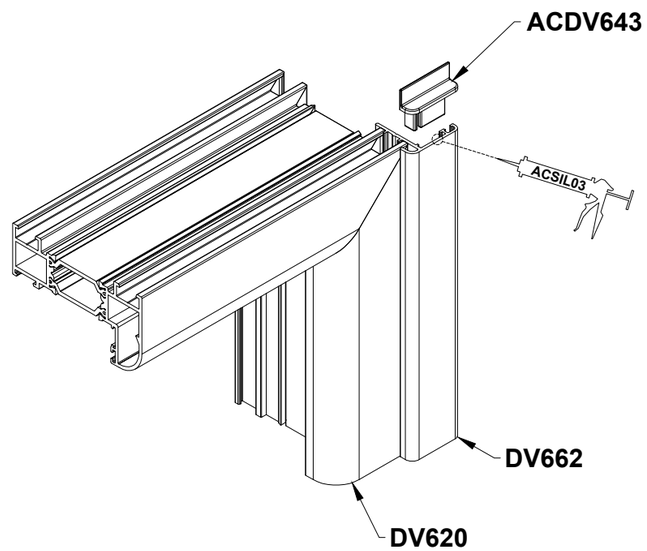

DV662 preparation detail for ACDV642 end cap.

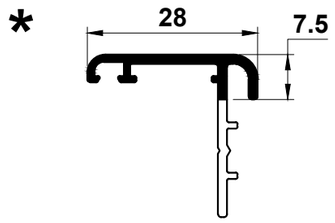

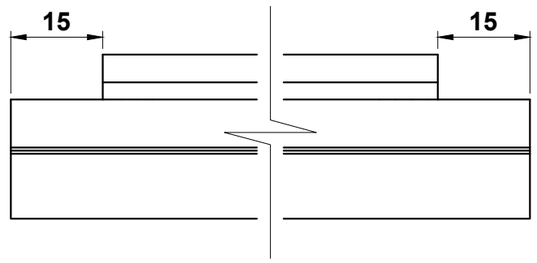

Do Not Scale From This Drawing

DV38 Preparation

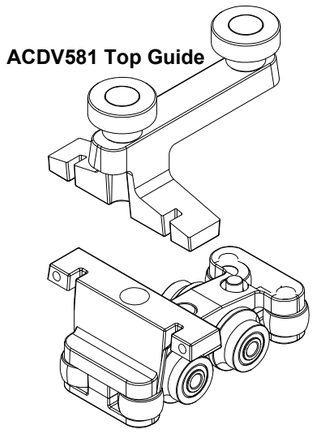

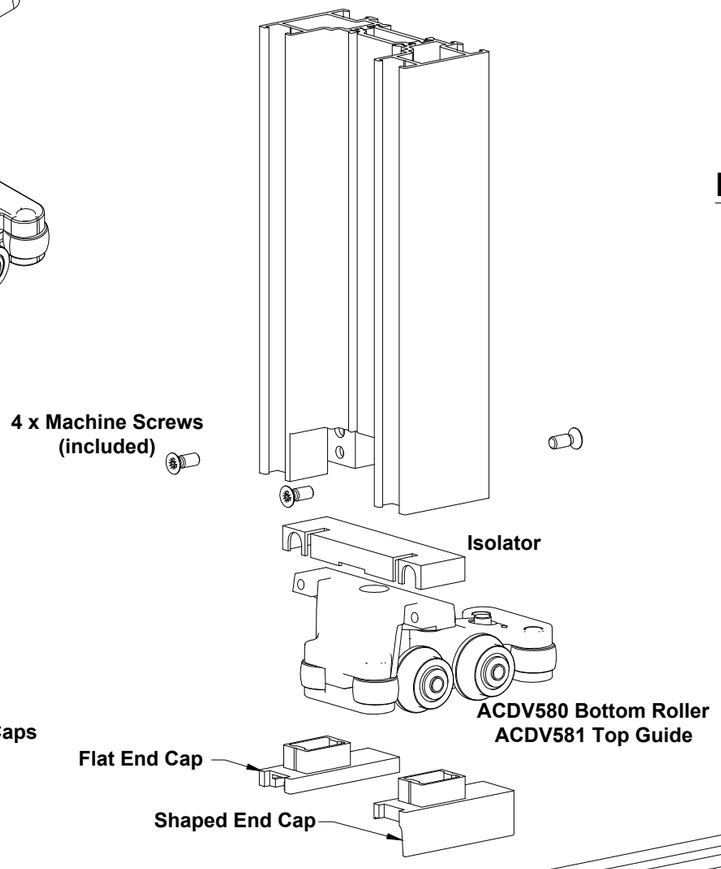

ACDV590 Kits Contain:

- 10 Pairs Flat End Caps
- 10 Pairs Shaped End Caps
- 10 Pairs of Isolators

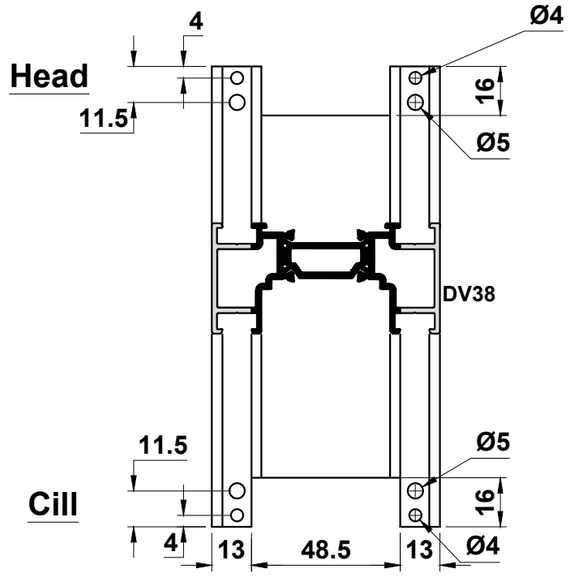

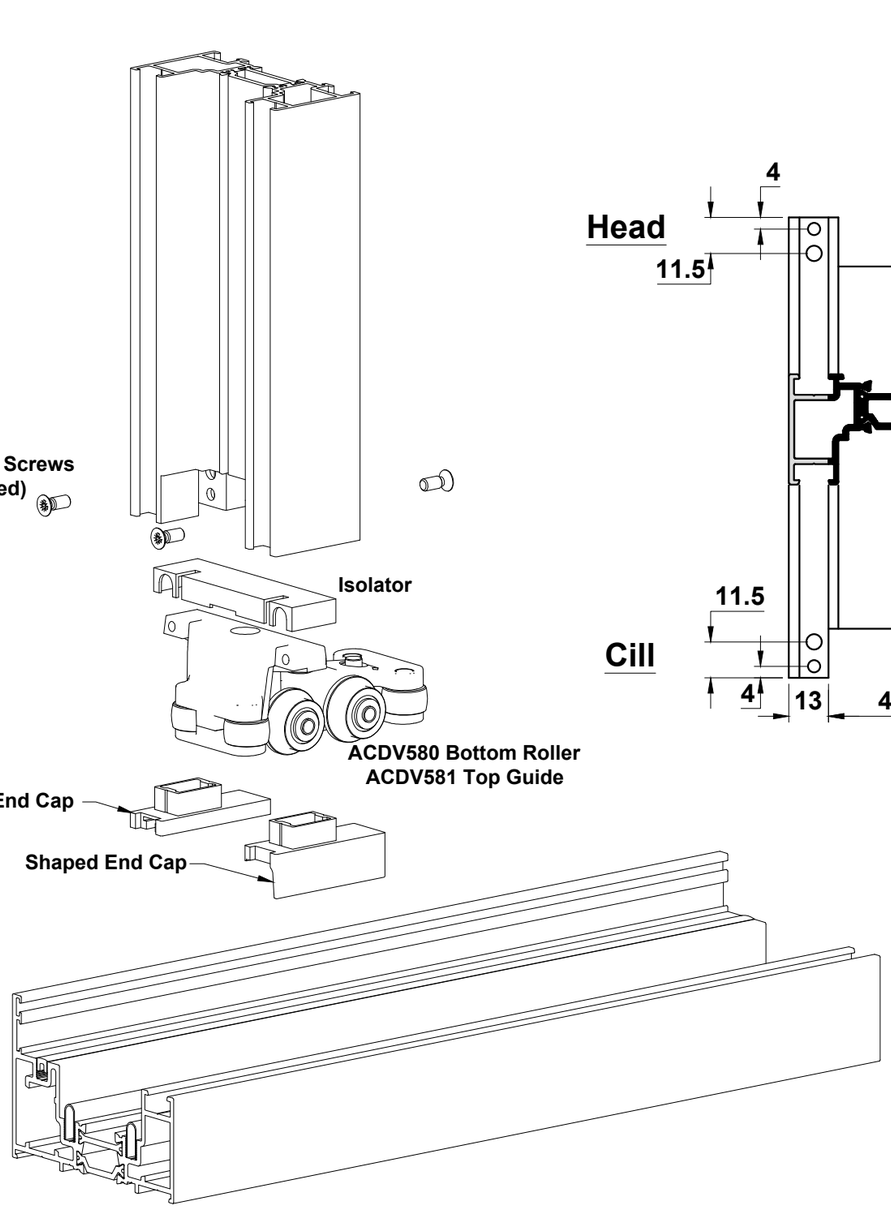

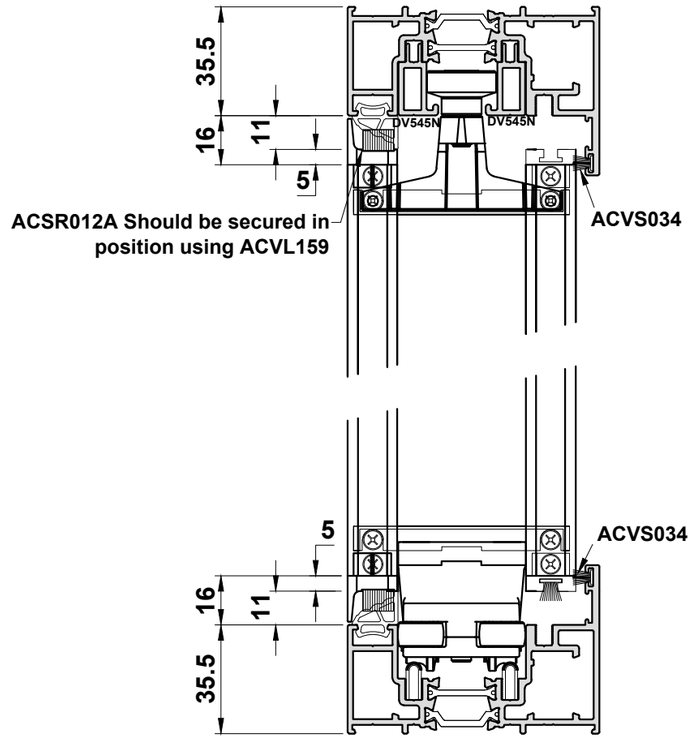

Do Not Scale From This Drawing

Glazing Details

24mm Glazing

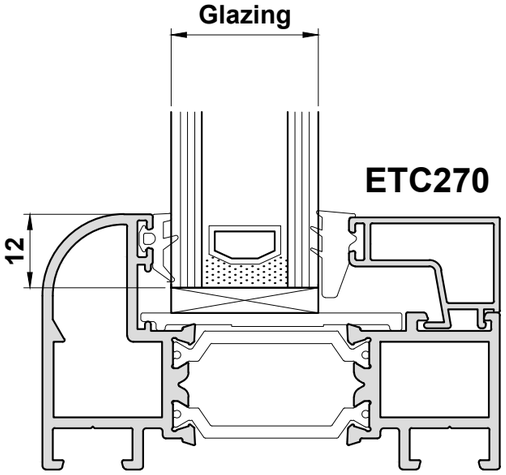

DV620
DV622

24mm Units	
BEADS	GASKET
ETC270	Outside: ACET842 3mm 'E' Gasket
	Inside: ACET840 5mm Wedge Gasket

28mm Glazing

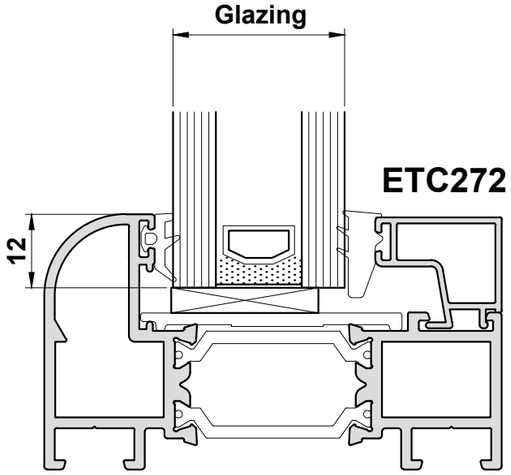

DV620
DV622

28mm Units	
BEADS	GASKET
ETC272	Outside: ACET842 3mm 'E' Gasket
	Inside: ACET840 5mm Wedge Gasket

32mm Glazing

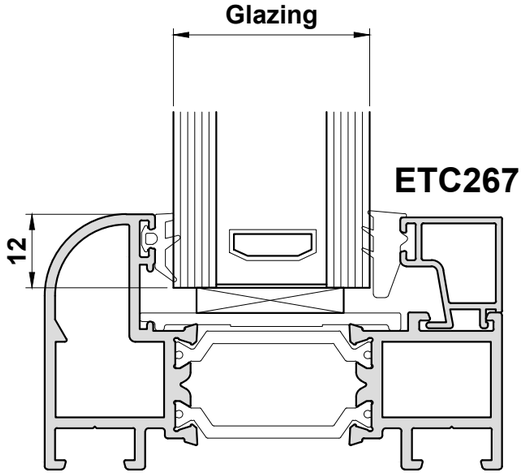

DV620
DV622

32mm Units	
BEADS	GASKET
ETC267	Outside: ACET842 3mm 'E' Gasket
	Inside: ACET840 5mm Wedge Gasket

5mm Glazing

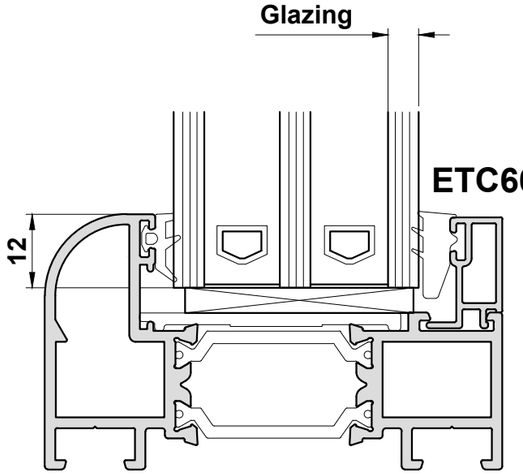

DV620
DV622

40mm Units	
BEADS	GASKET
ETC667	Outside: ACET842 3mm 'E' Gasket
	Inside: ACET840 5mm Wedge Gasket

Typical Toe & Heel Locations

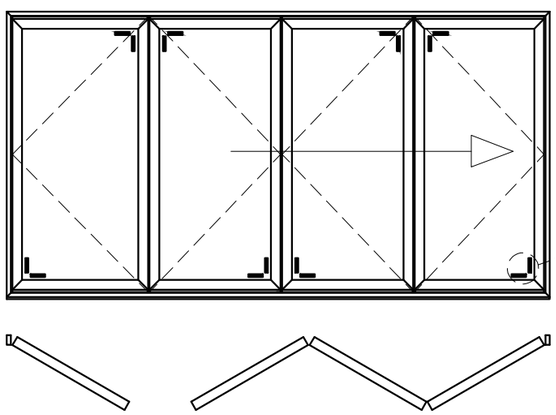

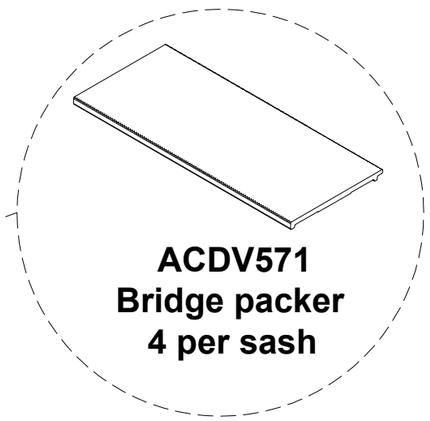

Do Not Scale From This Drawing

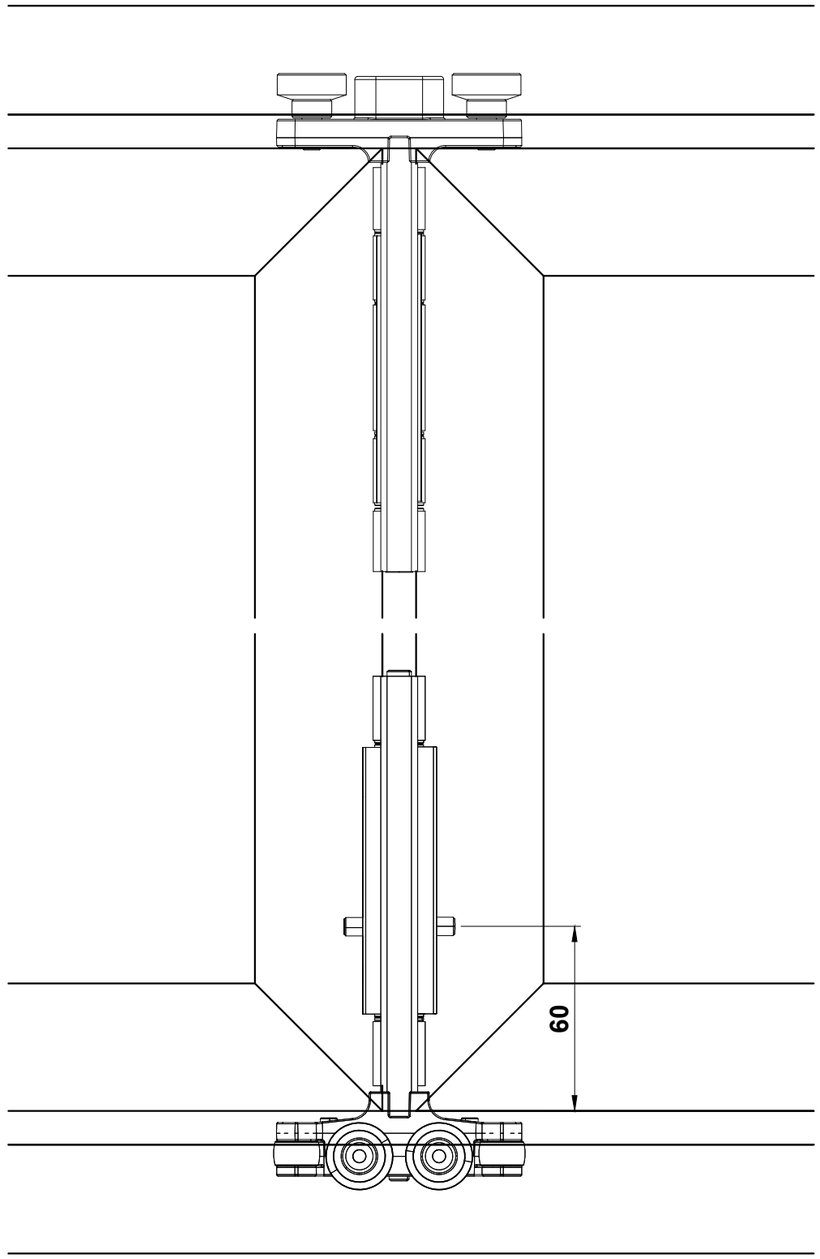

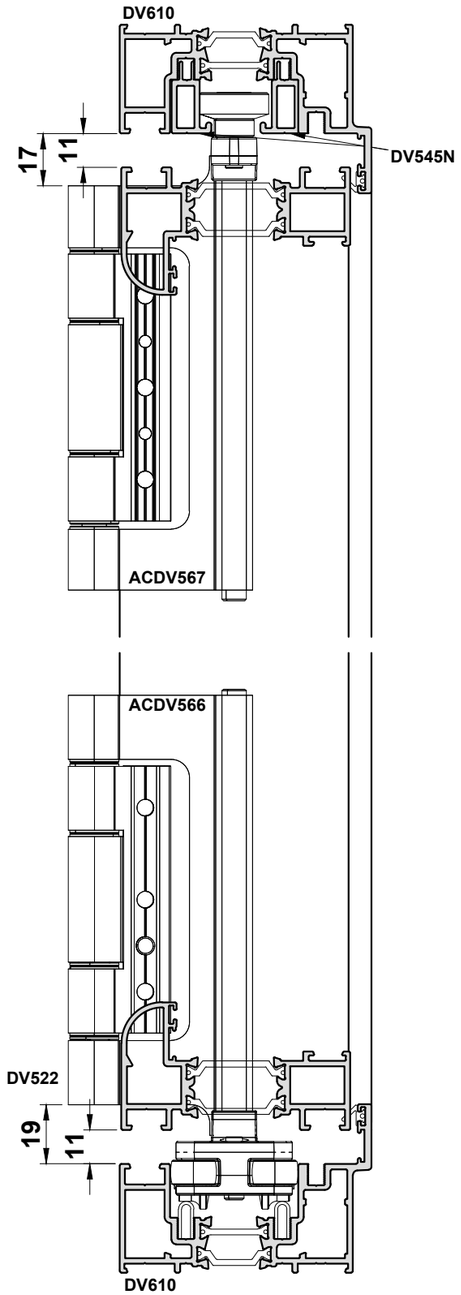

Typical Hinge Layout:
A = ACDV331 Intermediate Hinge
B = ACDV566 Bottom Roller Carrier
C = ACDV567 Top Guide Carrier
D = ACDV234 'D' Handle Hinge

Note:
Once hinges are set into position, replace centre machine screw with a self tapping screw for permanent fixing.

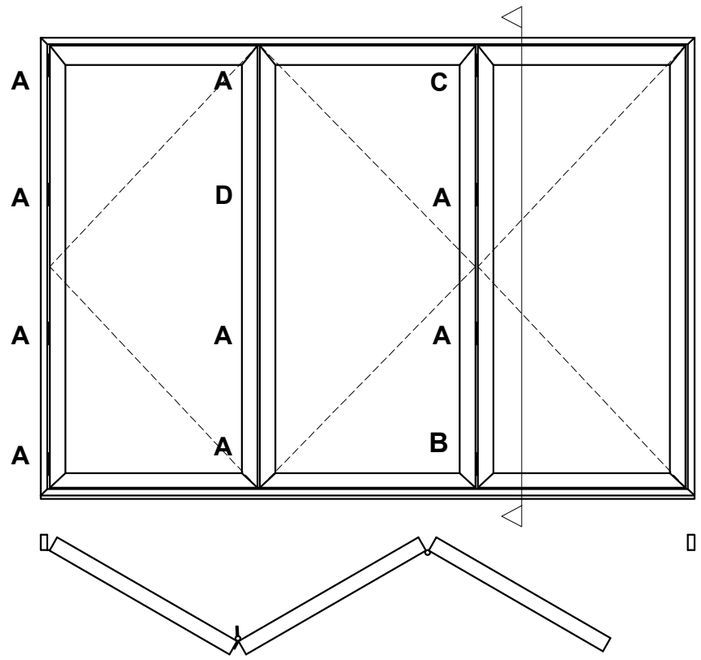

Do Not Scale From This Drawing

ACDV275 & ACDV375 Gasket Details

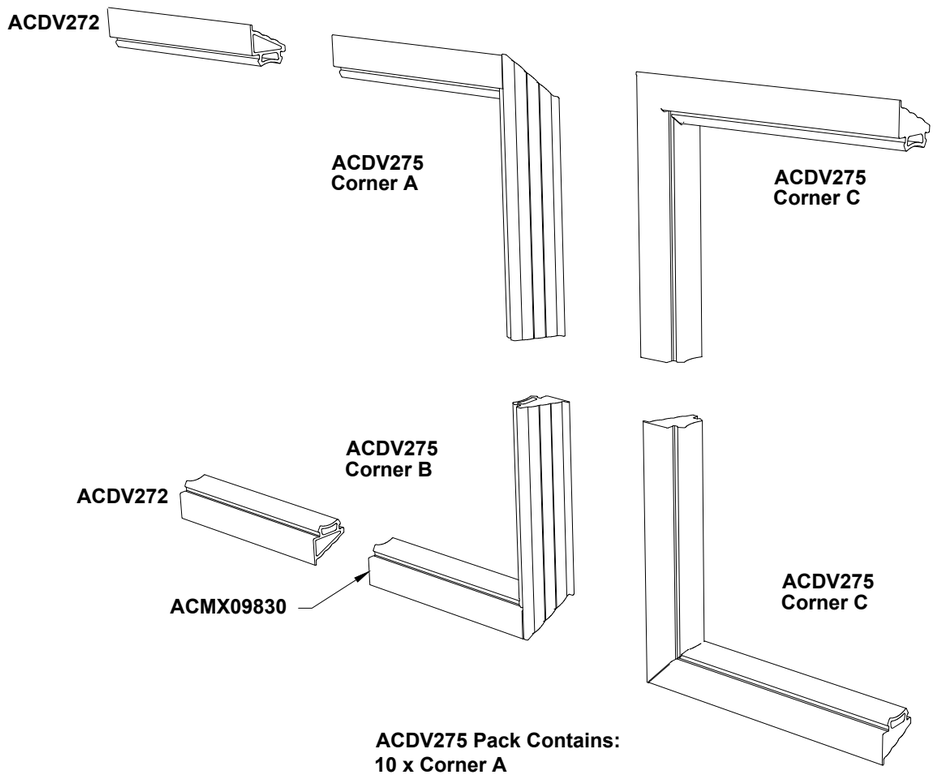

ACDV275 Pack Contains:
10 x Corner A
10 x Corner B
20 x Corner C

Packs of each corner type may also be ordered as:
ACDV275A, ACDV275B or ACDV275C

Outer Frame Gasket Detail

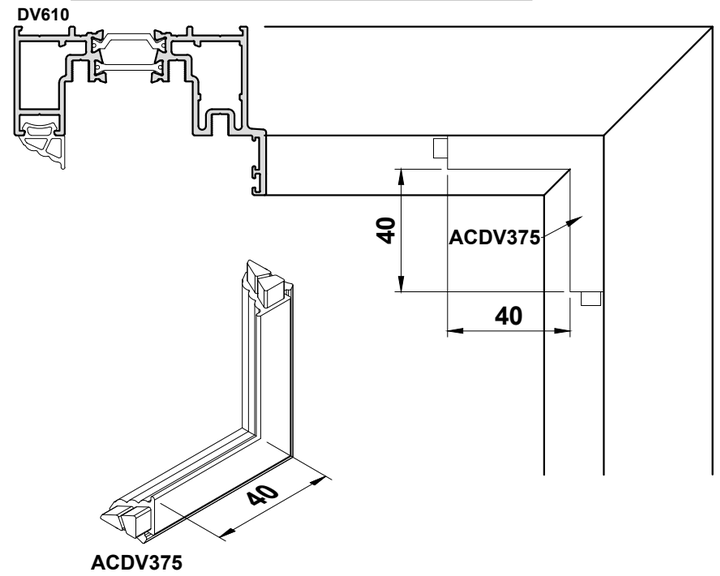

Example Vent Gasket Detail

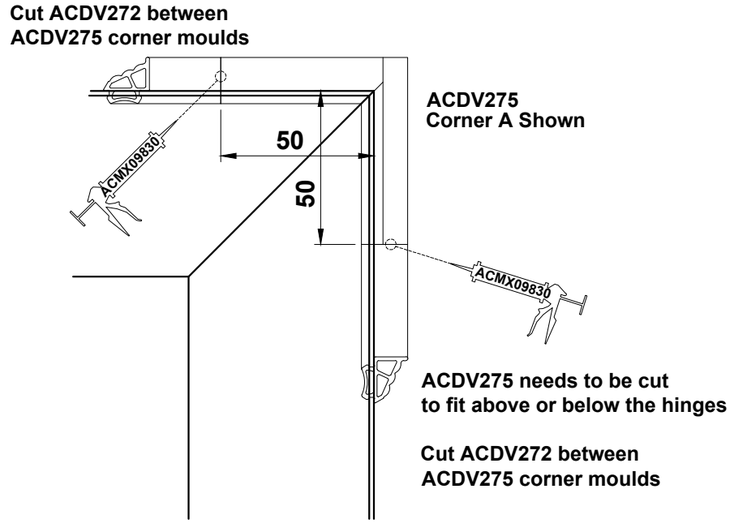

Do Not Scale From This Drawing

ACDV305 installation.

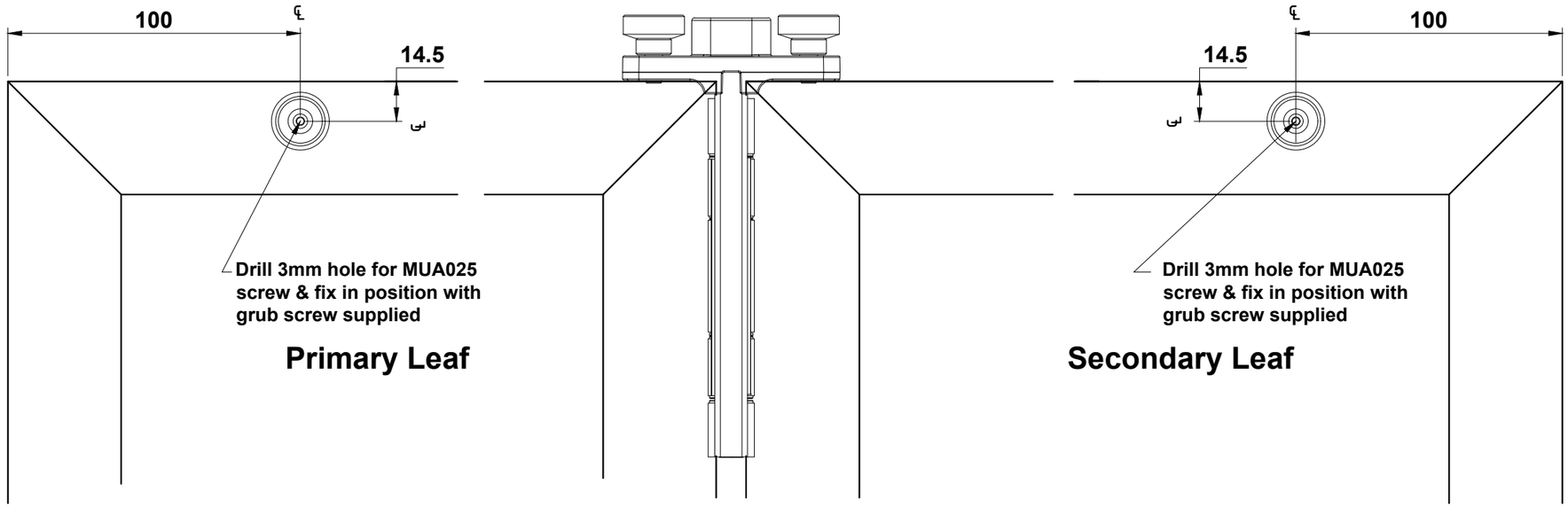

ACDV305 Kit Contains

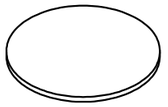

1 x Clear Polyurethane Pad

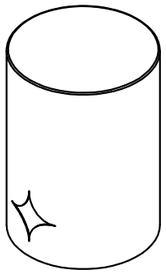

2 x 35mm Magnetic Holders

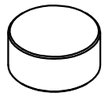

2 x Magnets

2 x Threaded Base

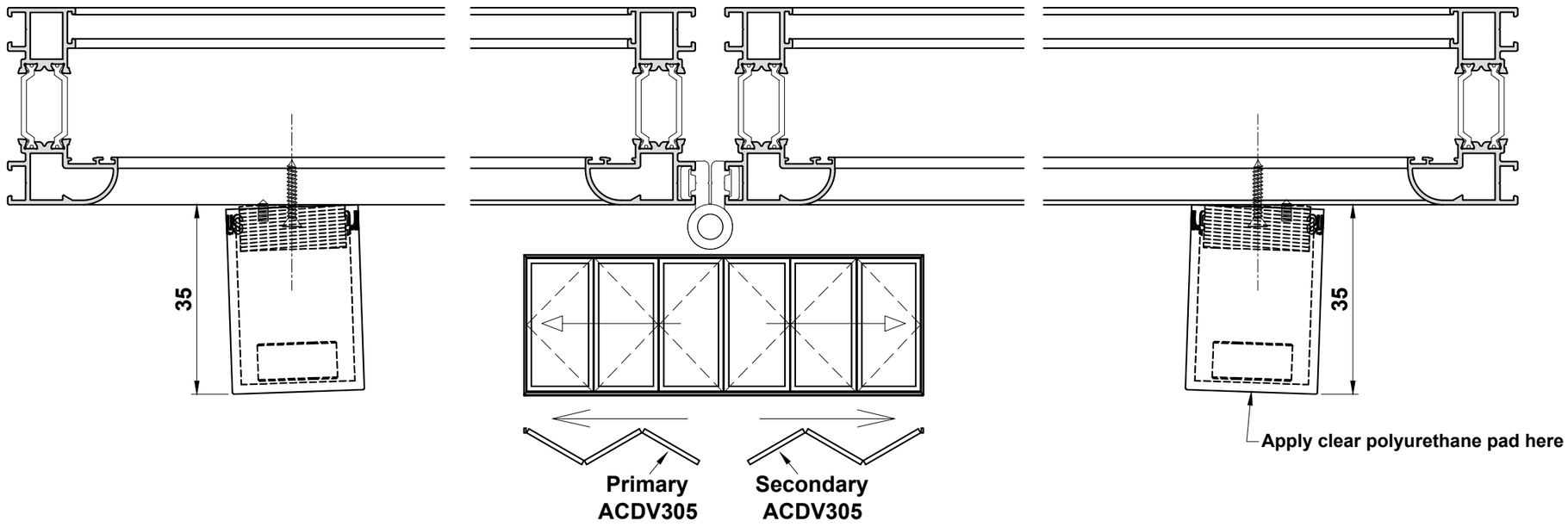

Do Not Scale From This Drawing

ACDV308 & ACDV309 installation.

Important Note:
ACDV308 & ACDV309 can only be used with DV622 Square Sash. Use ACDV305 for DV620 Curved Sash.

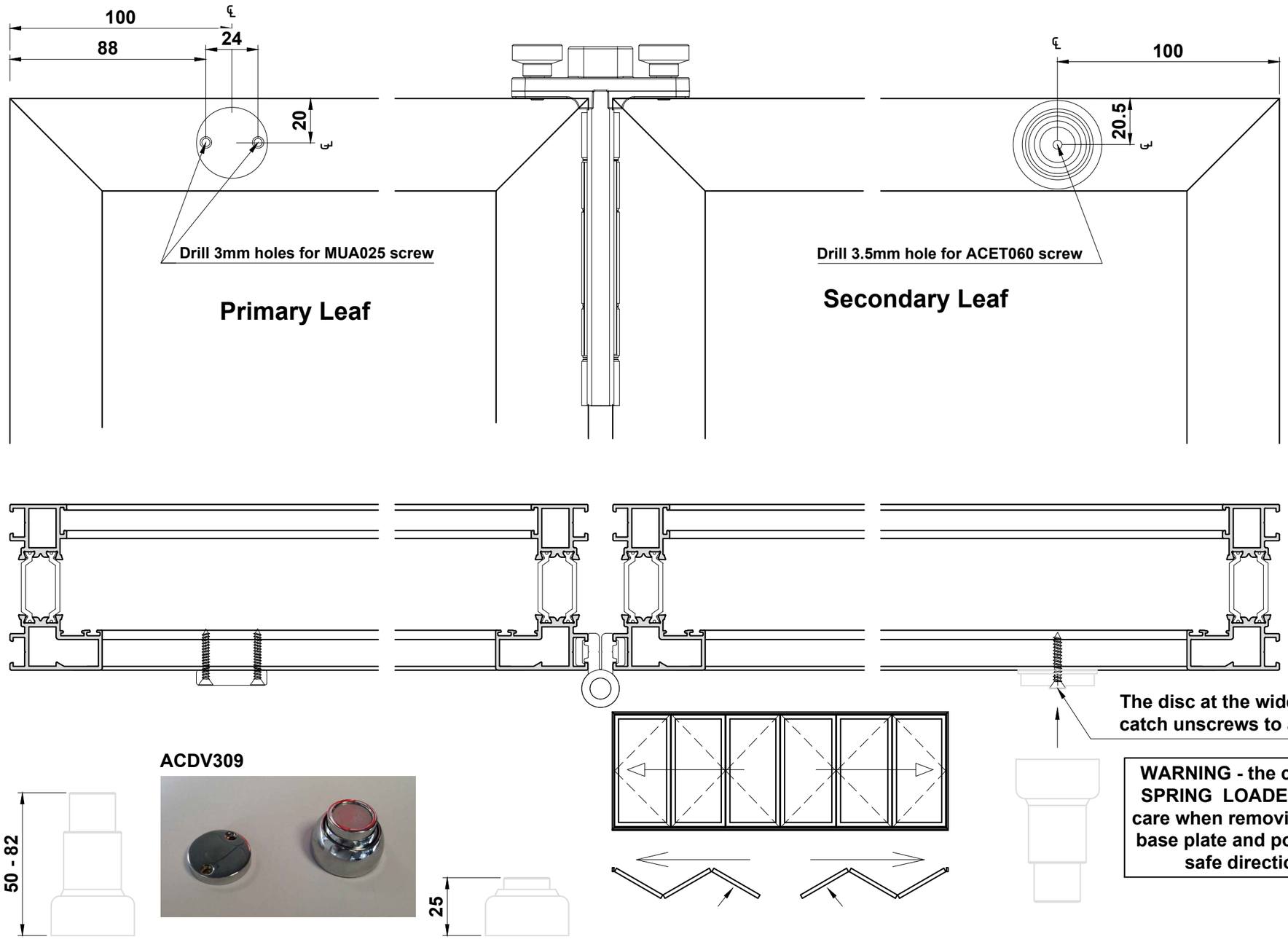

ACDV308

ACDV309

WARNING - the catch is SPRING LOADED, take care when removing from base plate and point in a safe direction

DV555 Removable corner. Type 1.

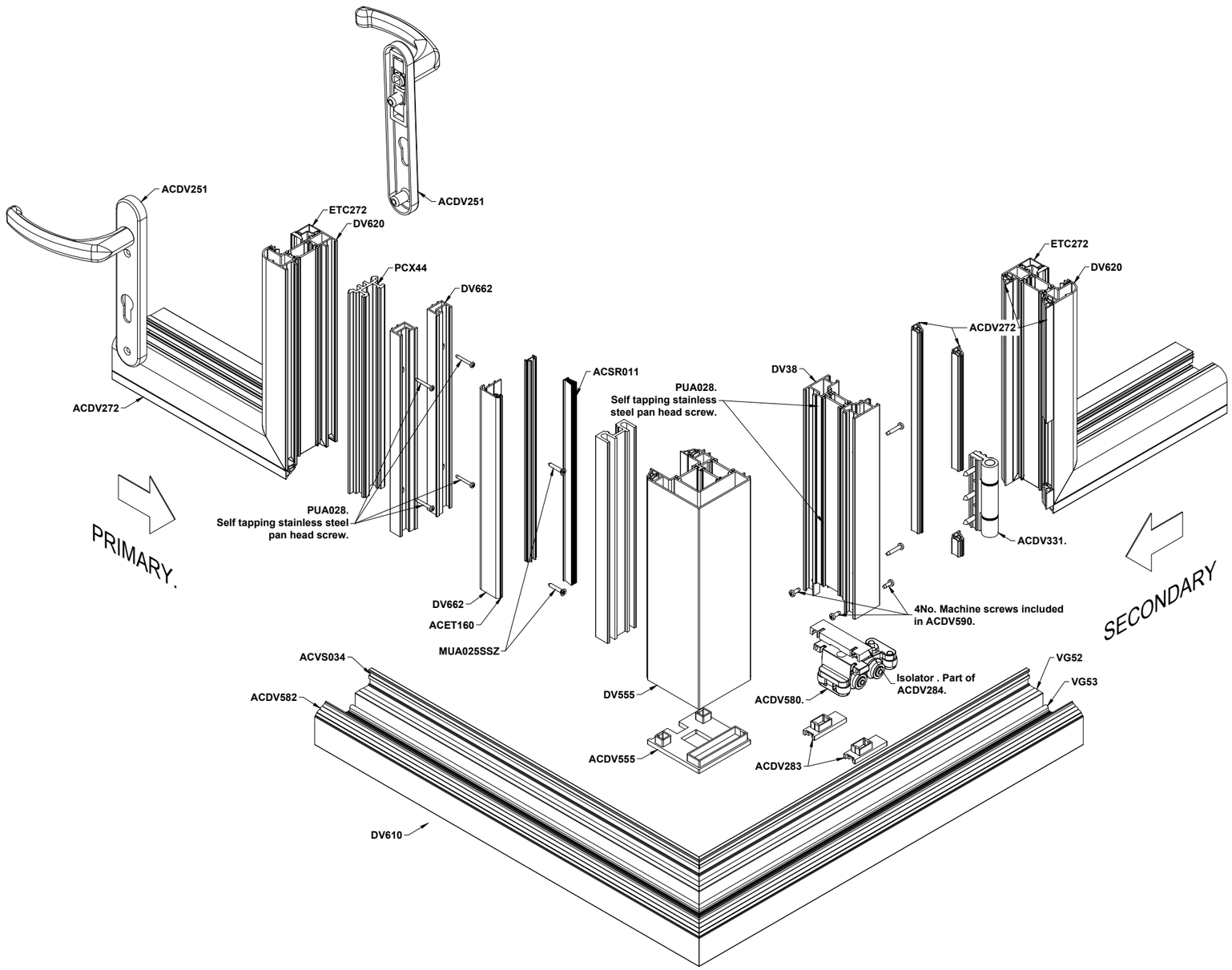

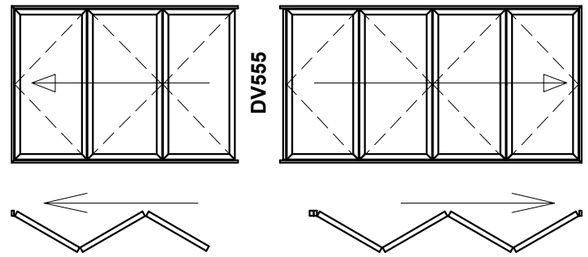

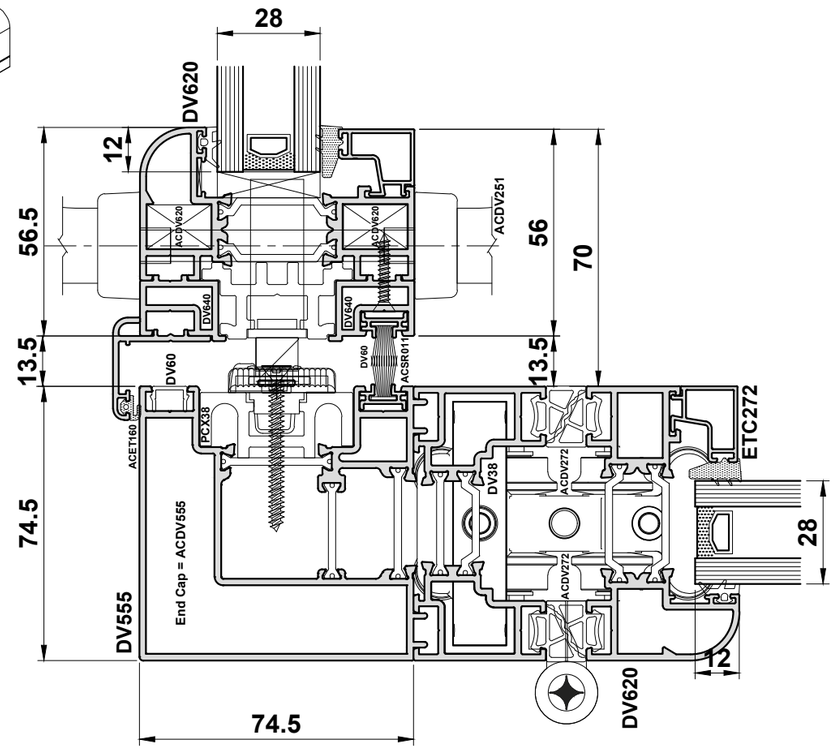

Do Not Scale From This Drawing

DV555 Removable corner. Type 2.

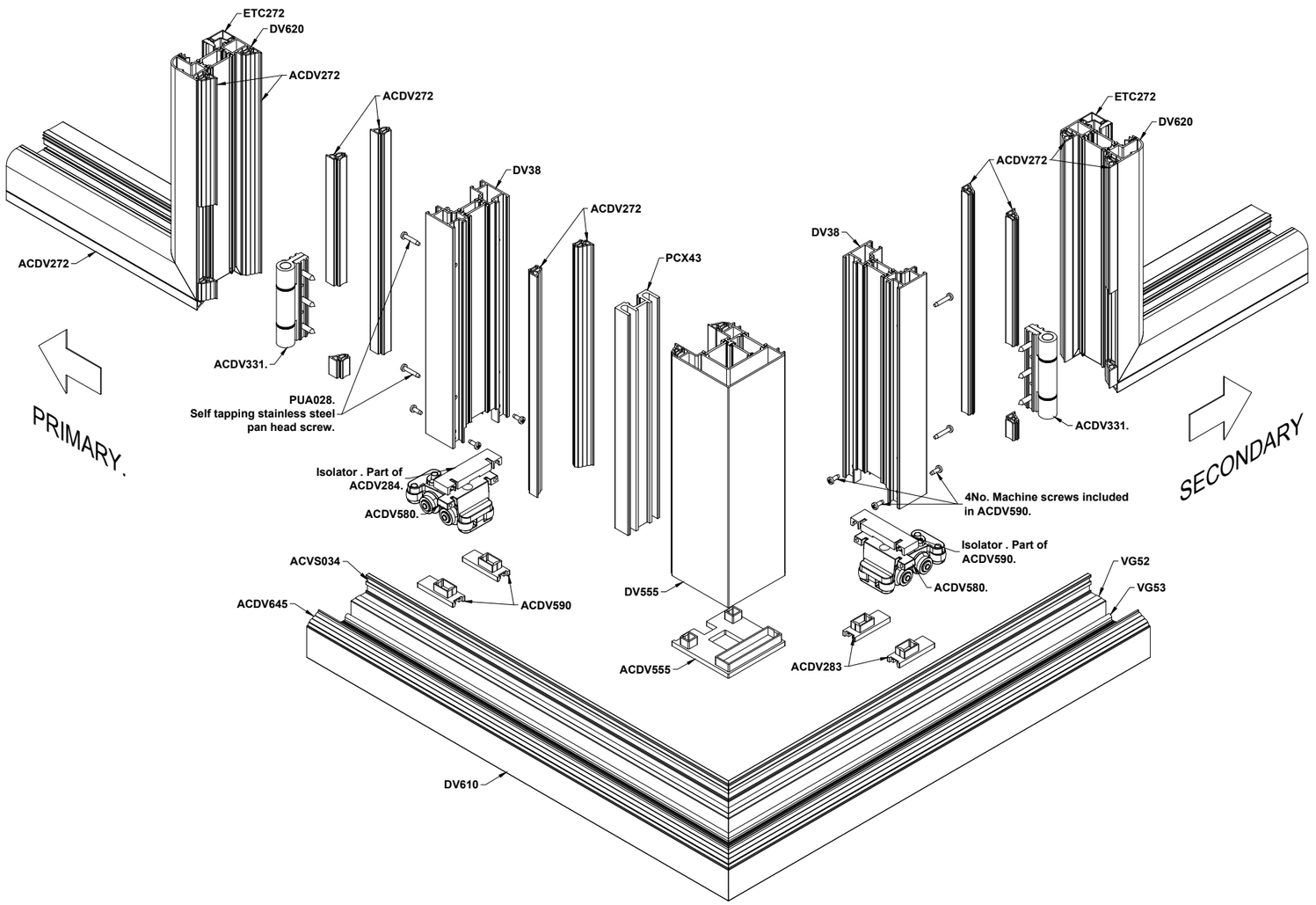

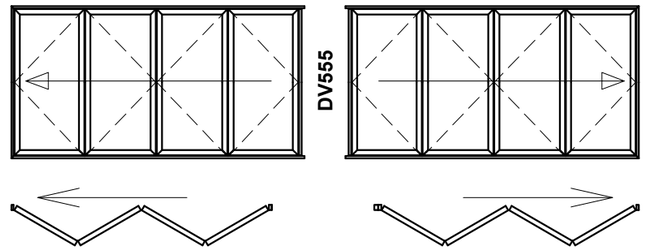

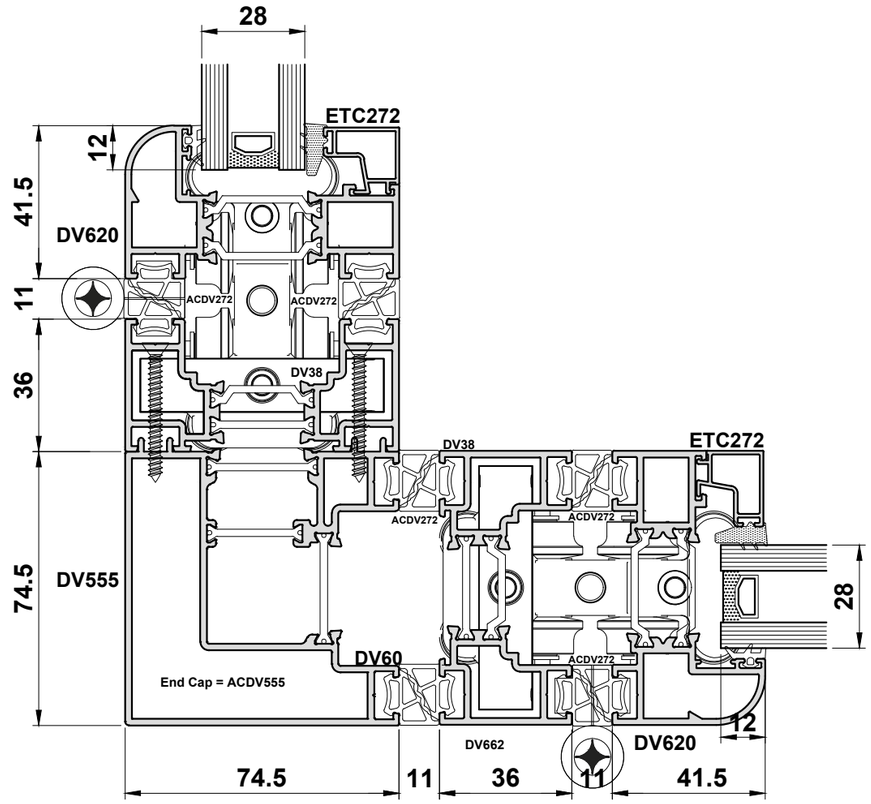

DV555 Removable corner. Type 3.

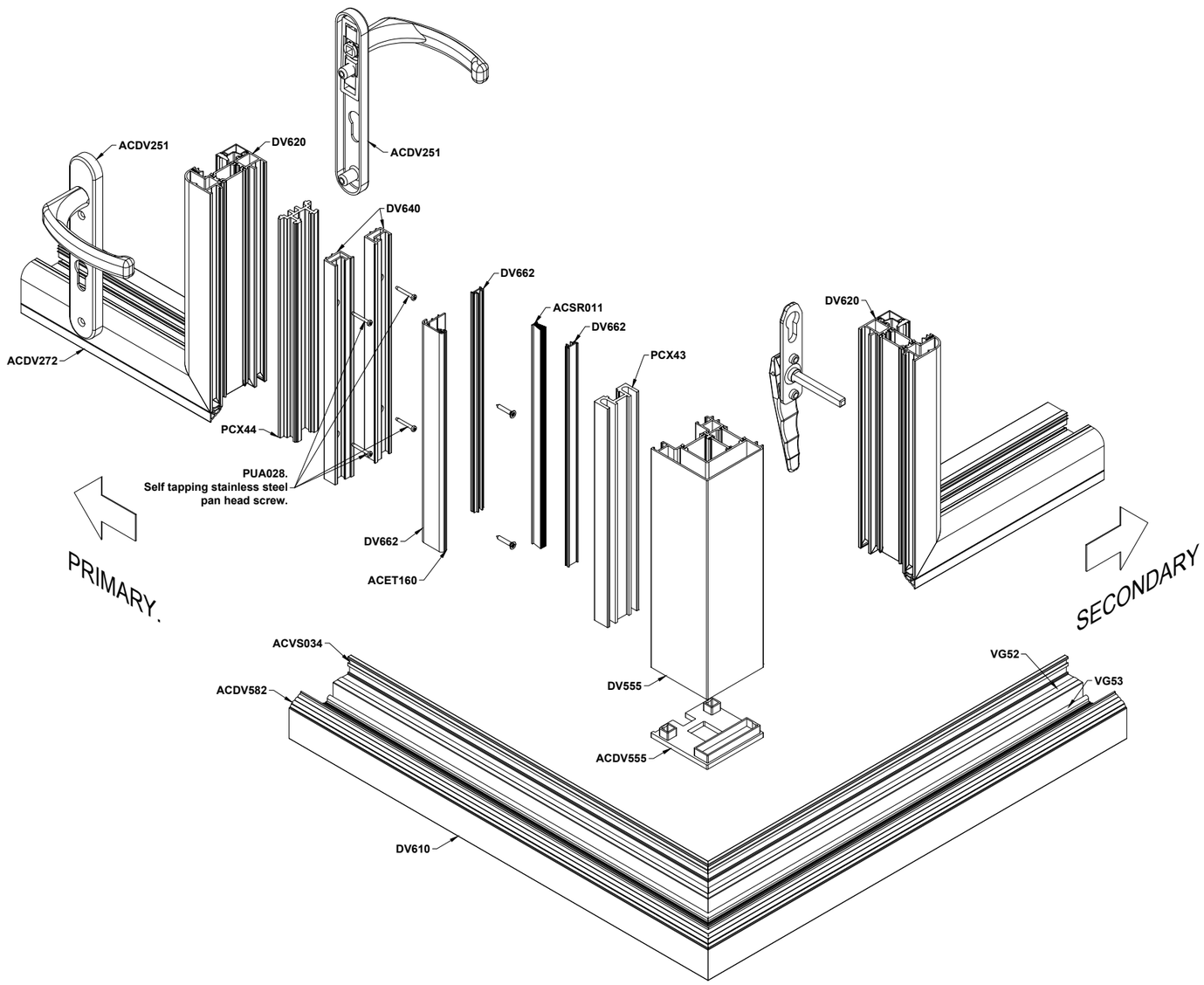

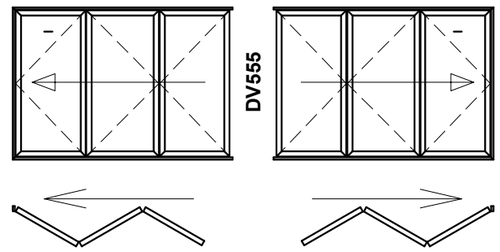

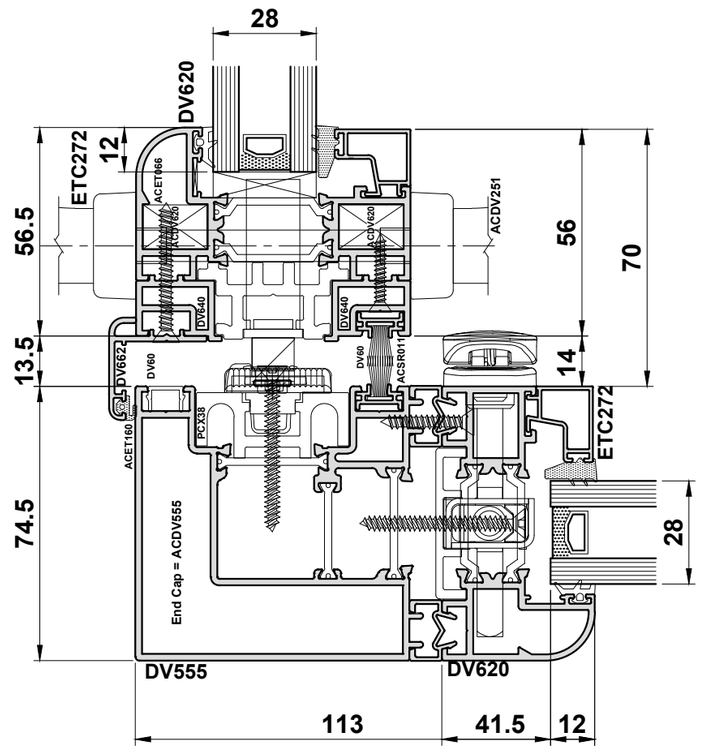

Do Not Scale From This Drawing

Outer Frame 90° Corner Assembly using ACDV552 & ACDV951

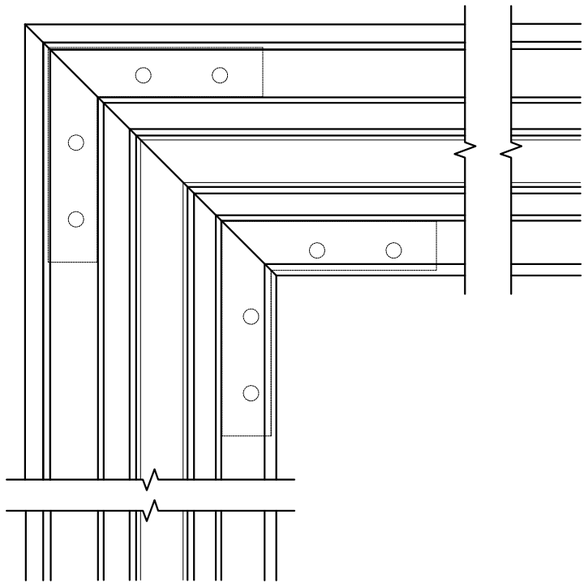

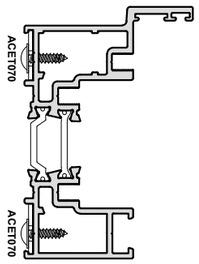

DV610

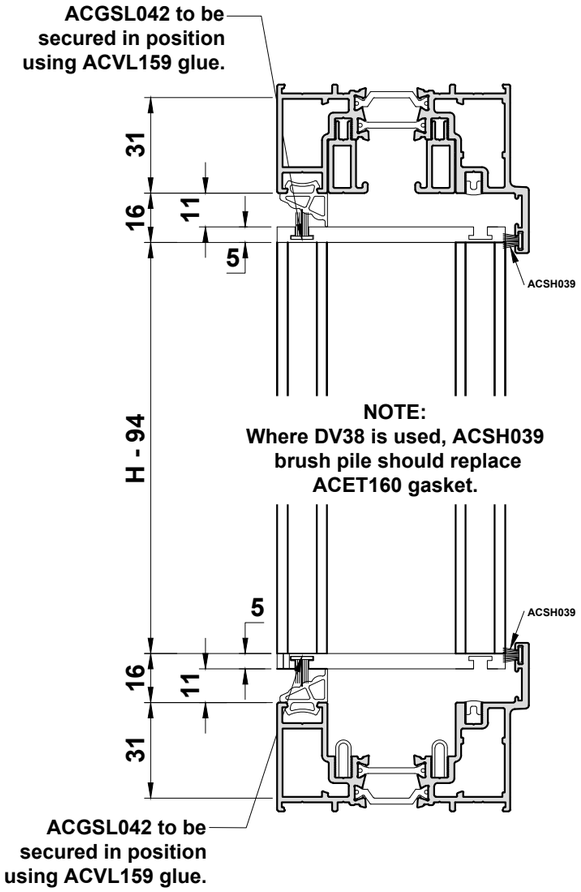

NOTE:
Where DV38 is used, ACSH039 brush pile should replace ACET160 gasket.

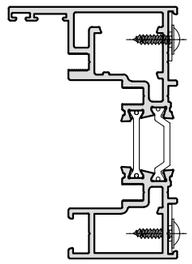

DV612

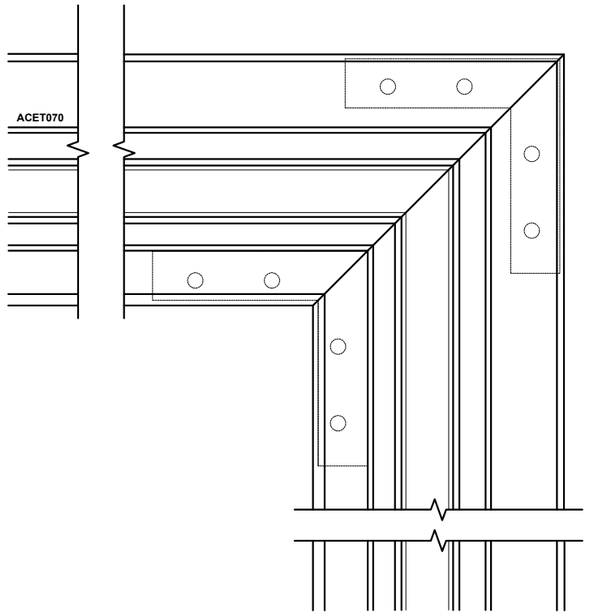

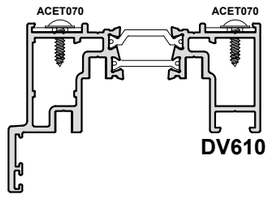

DV610

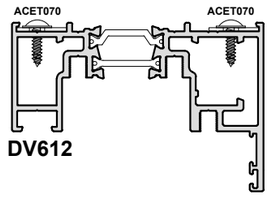

DV612

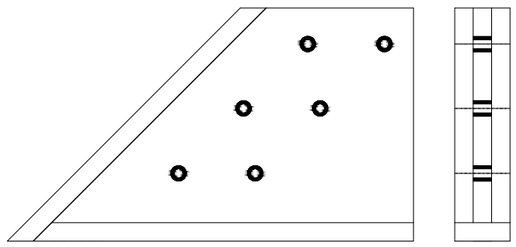

ACDV953

NOTE:
ACDV953 jig does not clamp into position and must be used as a marking jig only to avoid injury.

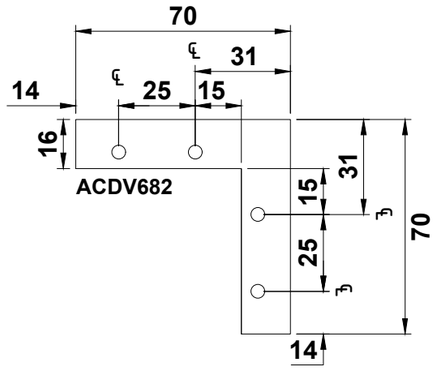

ACDV682

Preparation and assembly of coupling profiles.

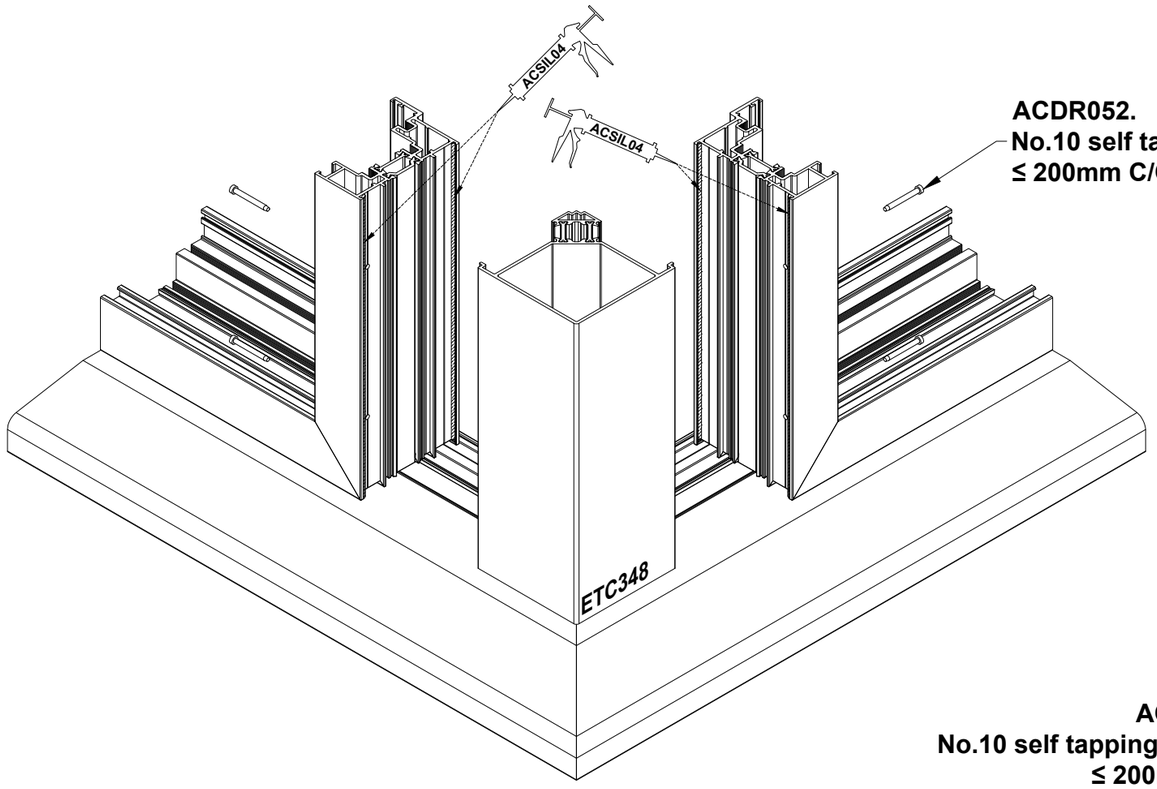

ACDR052.
No.10 self tapping screws.
≤ 200mm C/C.

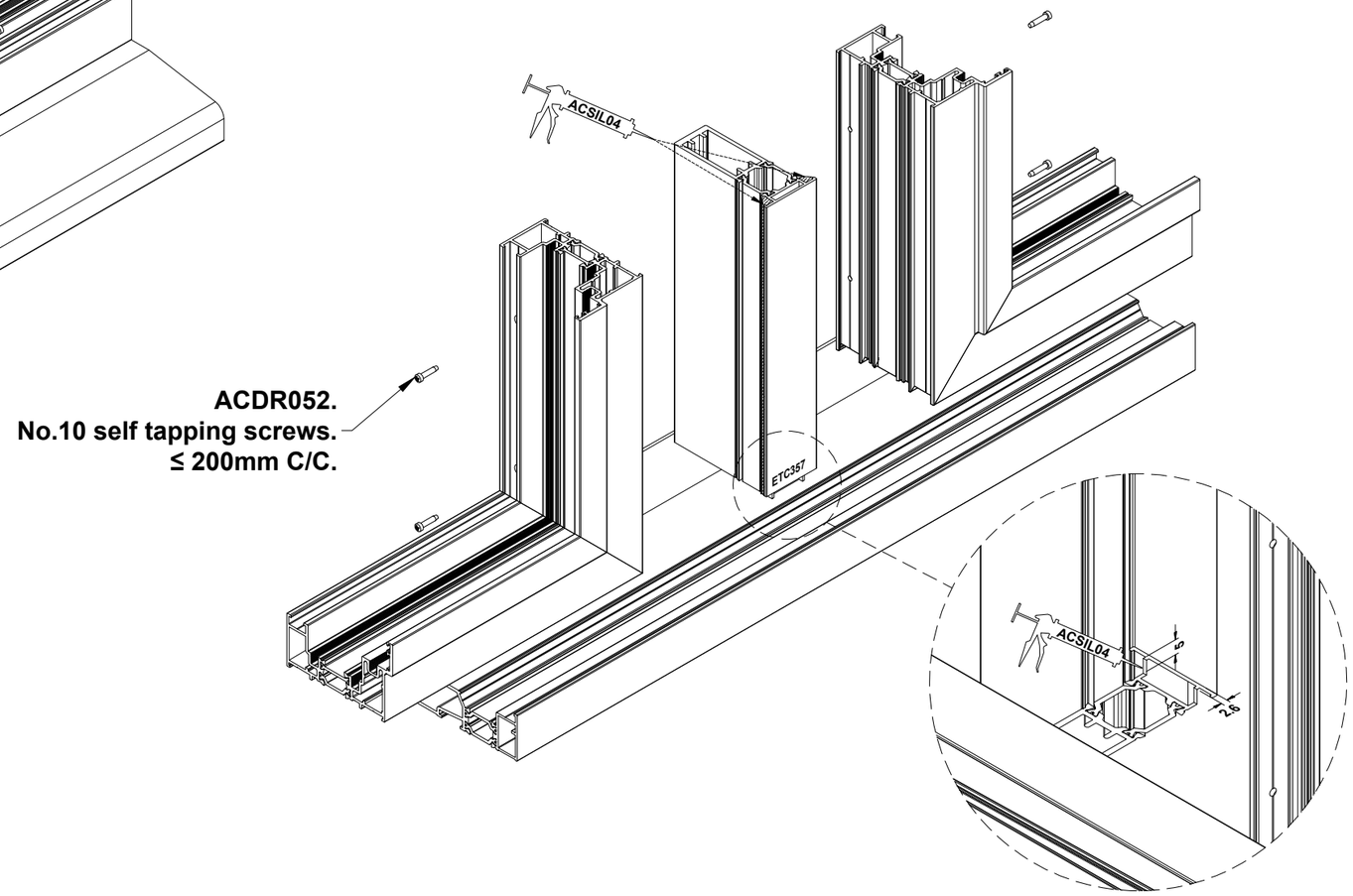

ACDR052.
No.10 self tapping screws.
≤ 200mm C/C.

ETC348

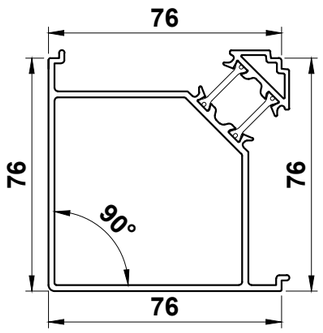

Scale 1:2

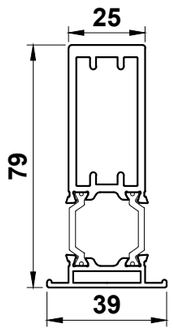

Scale 1:2

Section E

Construction Drawings
Open In

Corner Joint Details

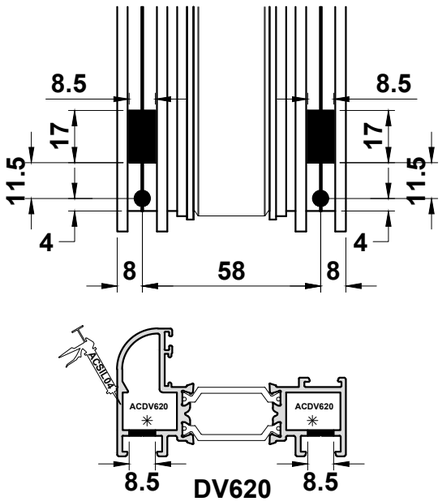

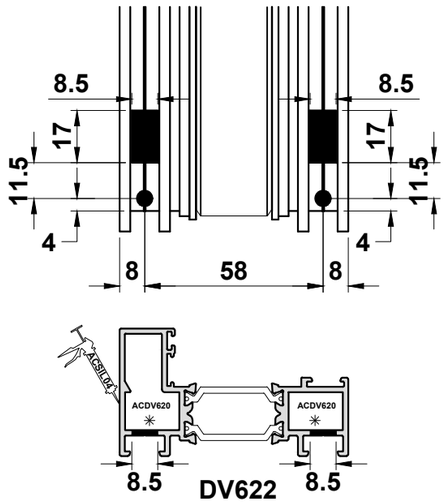

COAT CUT FACE OF PROFILE WITH ACSIL04
PRIOR TO MECHANICALLY JOINING

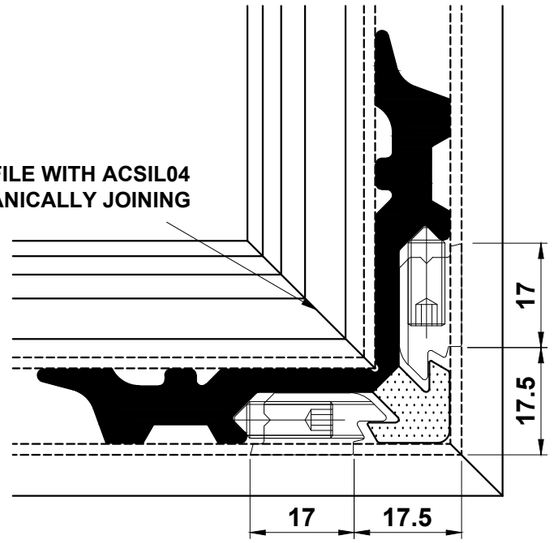

Note:
ACDV955 PUNCH TOOL MUST BE USED TO ACHIEVE CLEAT PREPARATIONS AS SHOWN.

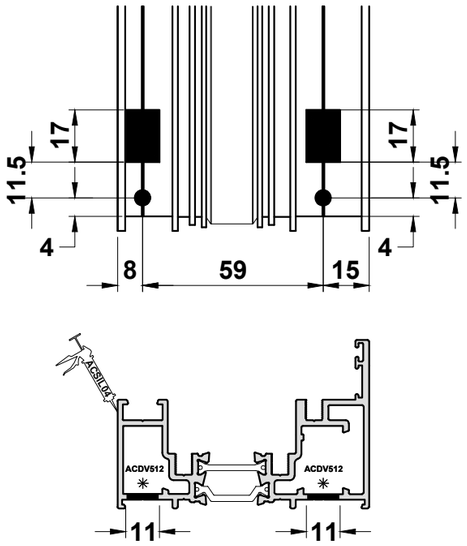

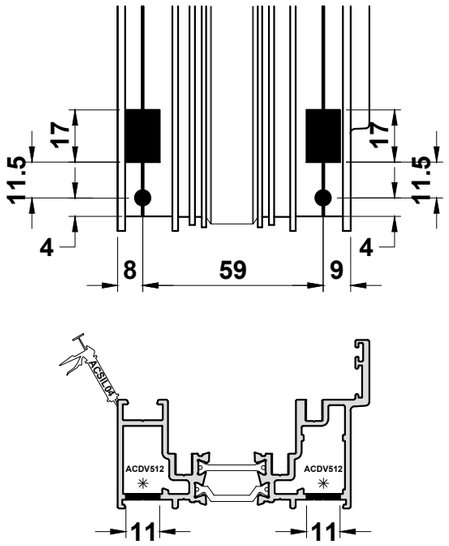

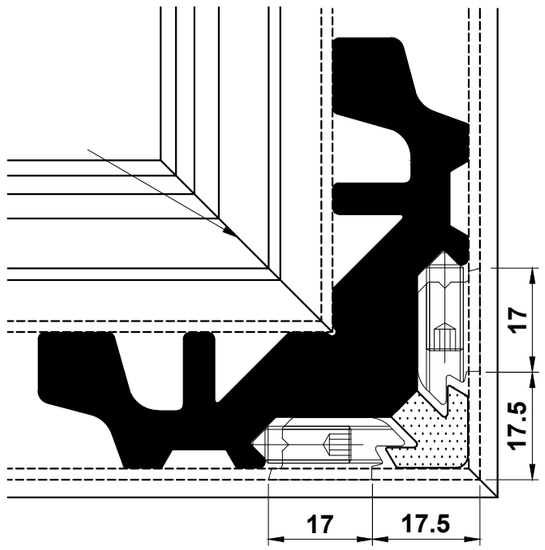

APPLY GLUE (ACSIL013) TO CLEAT APERTURE MARKED ✳

Do Not Scale From This Drawing

Drainage

Important Note:
The drainage details shown below are a minimum requirement. The quantity of drainage slots shall be increased as required to suit specific site requirements.
All Visofold 6000 doors must have either a flush cill (DV570/DV670) or extruded sub cill as detailed.

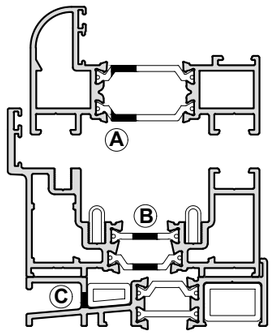

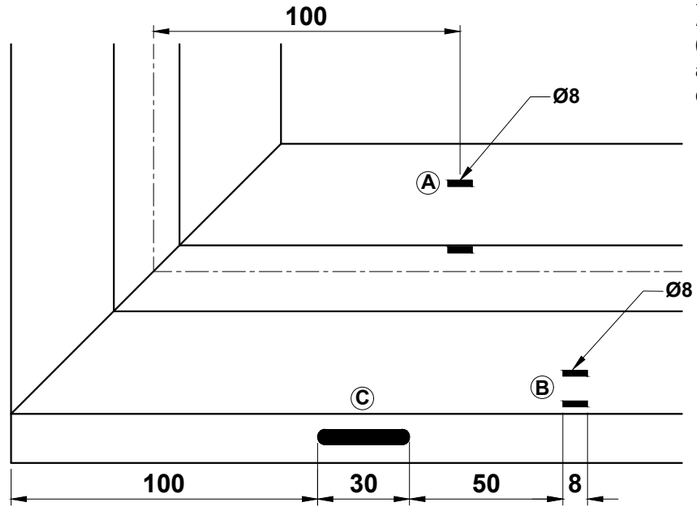

Open in door viewed from outside.

Note:
All doors must have either flush cill (DV570/DV670) or extruded sub cill as below. See page E05 for sub cill drainage.

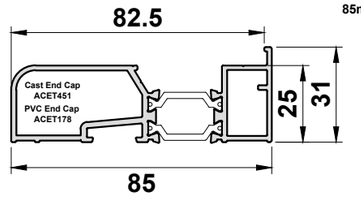

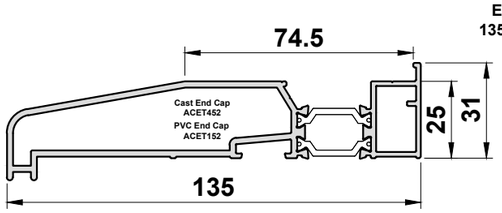

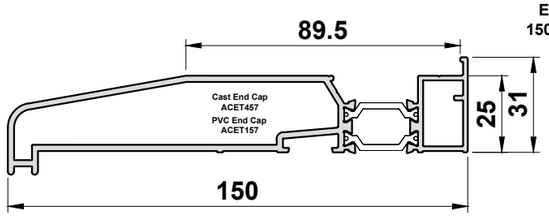

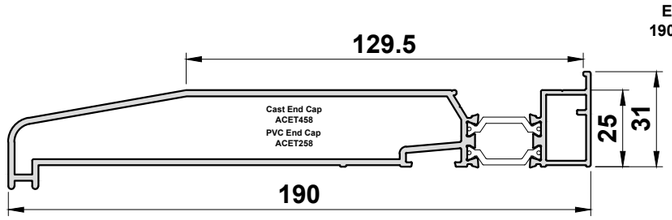

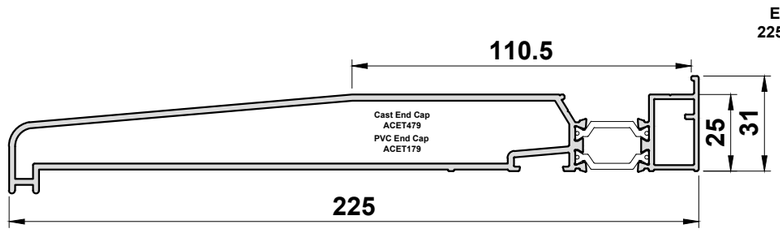

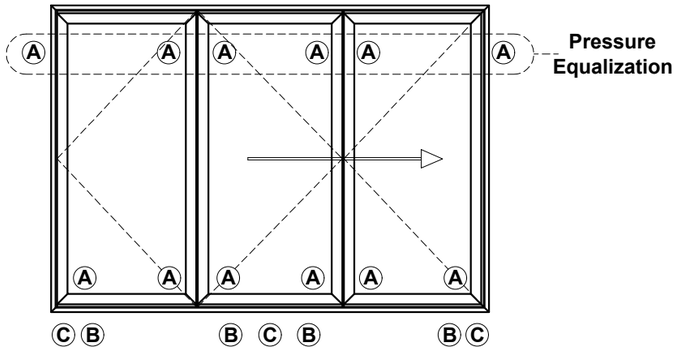

Note:
For DV670 please use ACDV670 end caps.

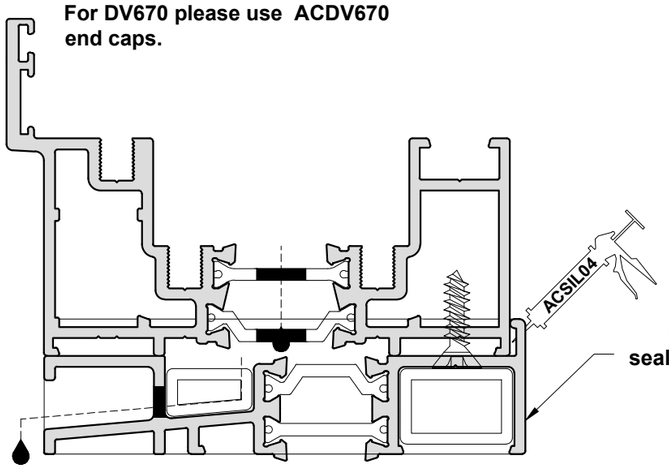

Cill end caps must be sealed to cill to prevent water egress over edge

DV570 Shown with ACDV570 end cap

Do Not Scale From This Drawing

DV545N & ACDV567 Top Guide Installation

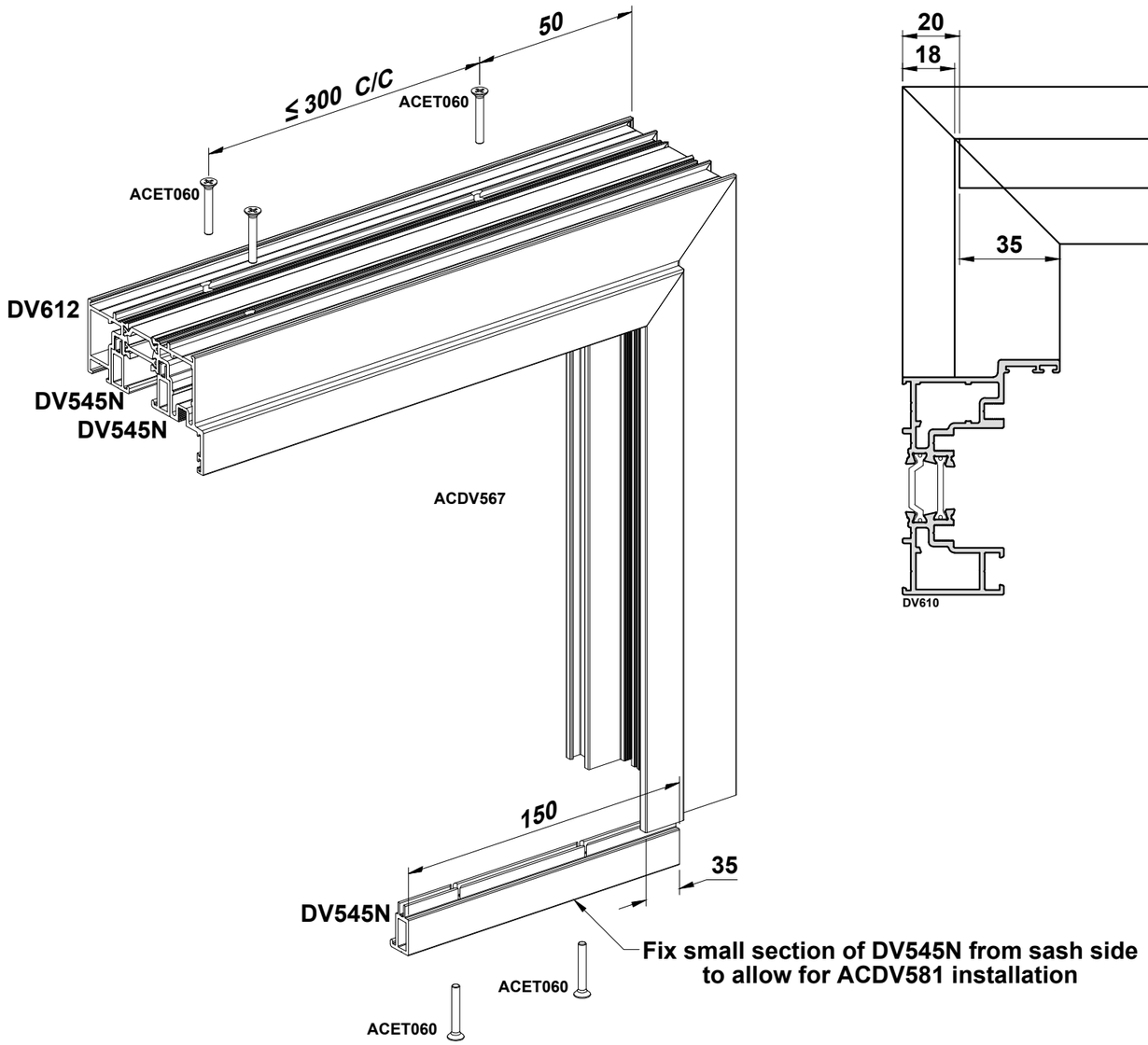

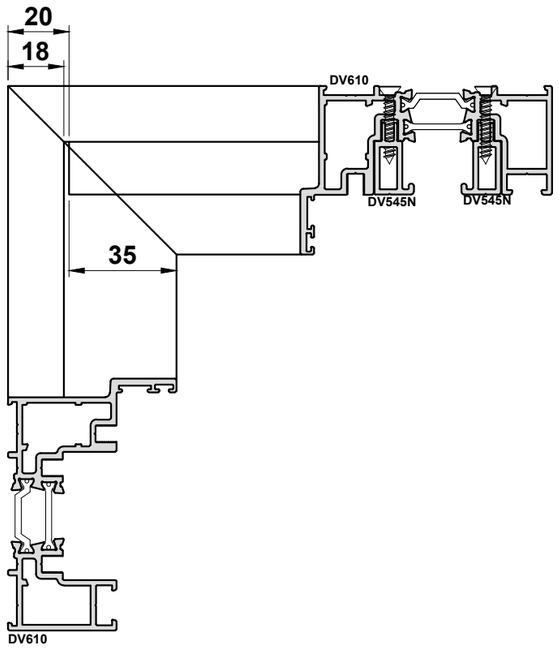

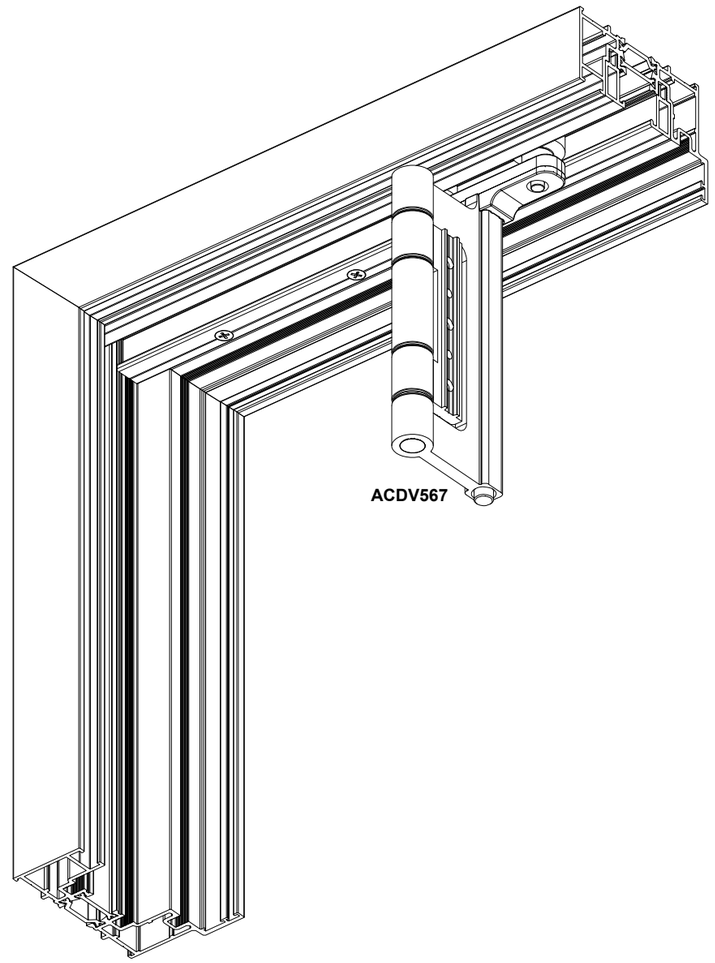

Do Not Scale From This Drawing

ACDV567 Top Guide

* Tapping plates MUST be inserted prior to frame assembly.

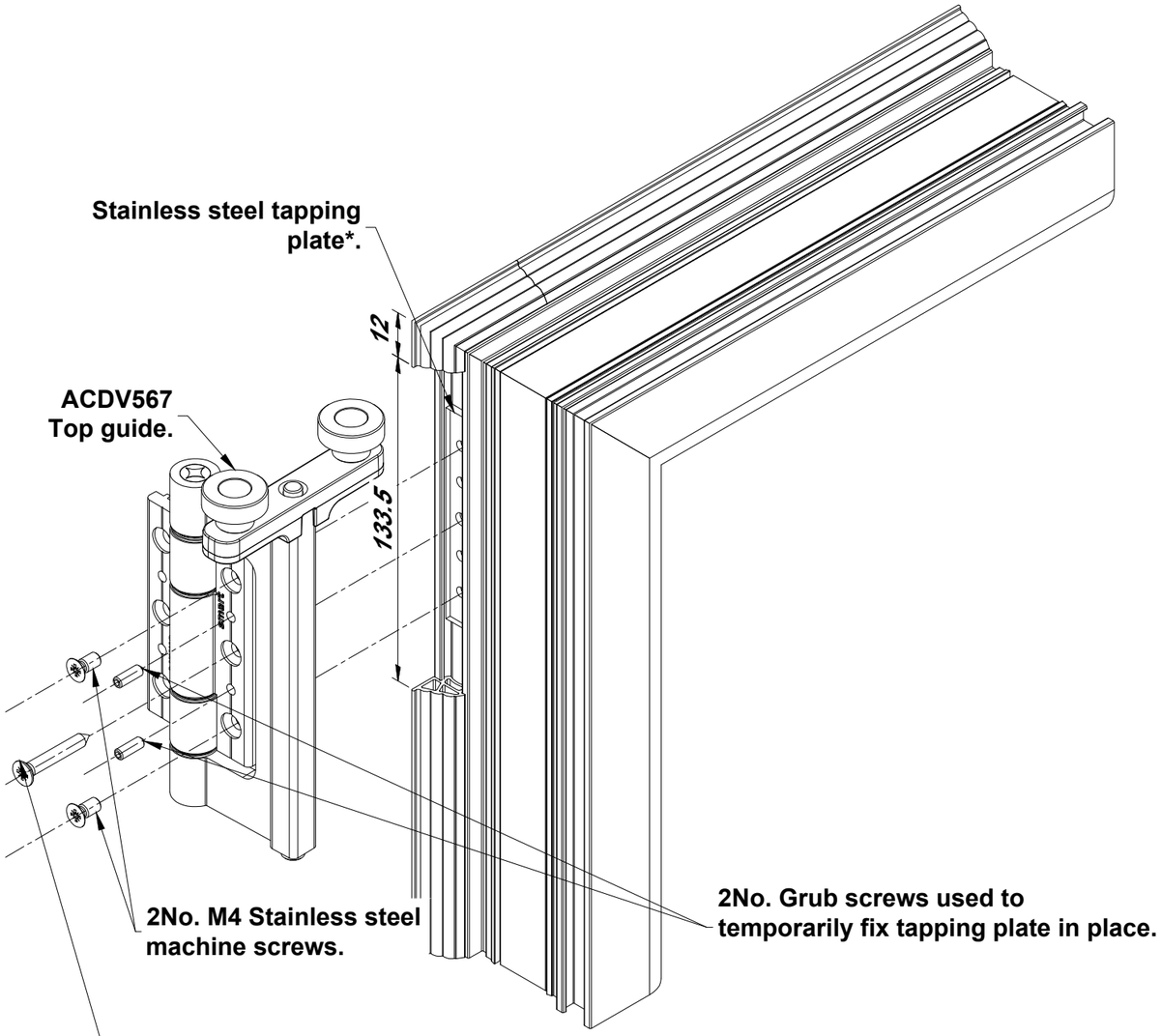

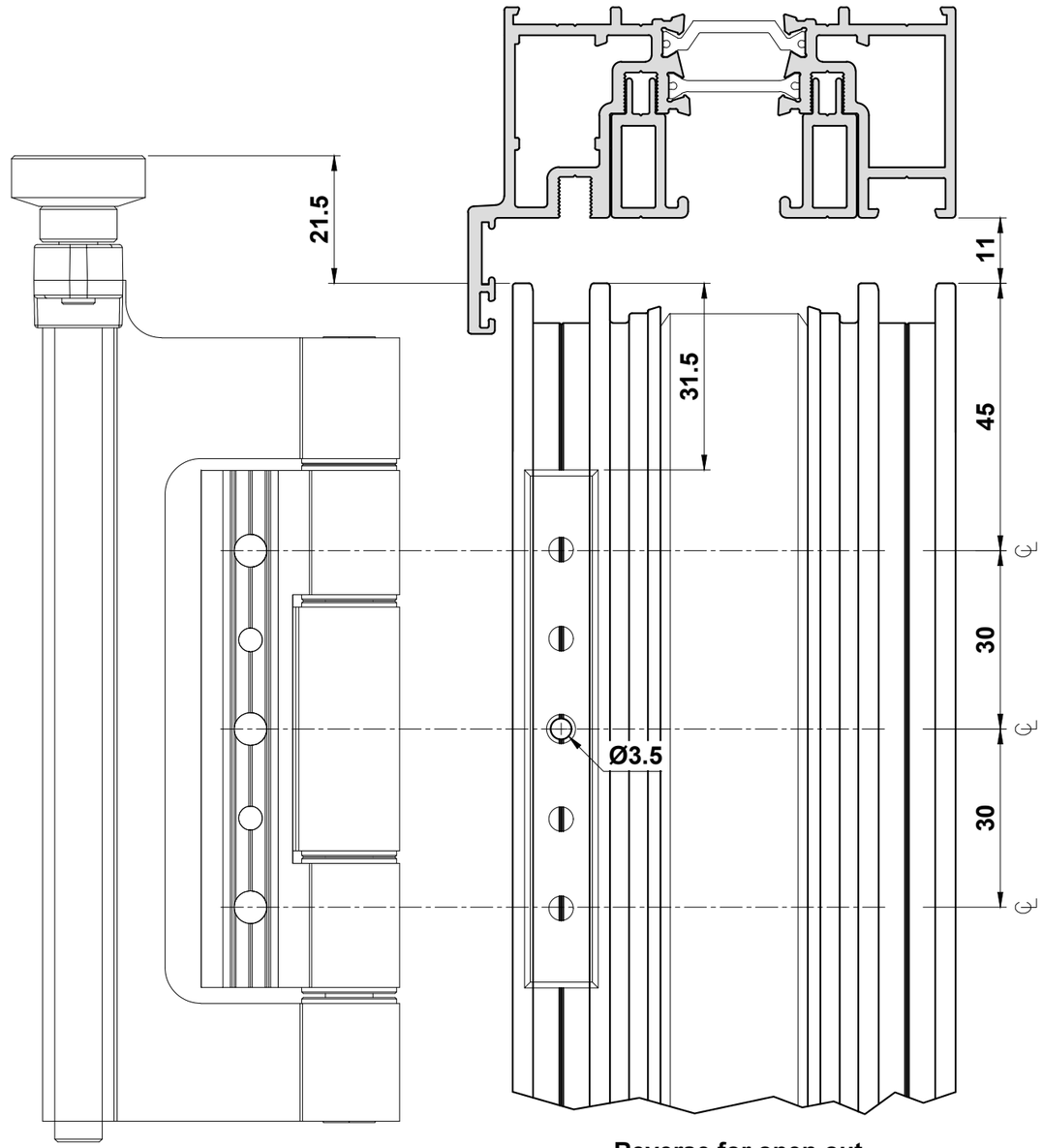

Reverse for open out.

Do Not Scale From This Drawing

ACDV566 Bottom Carrier

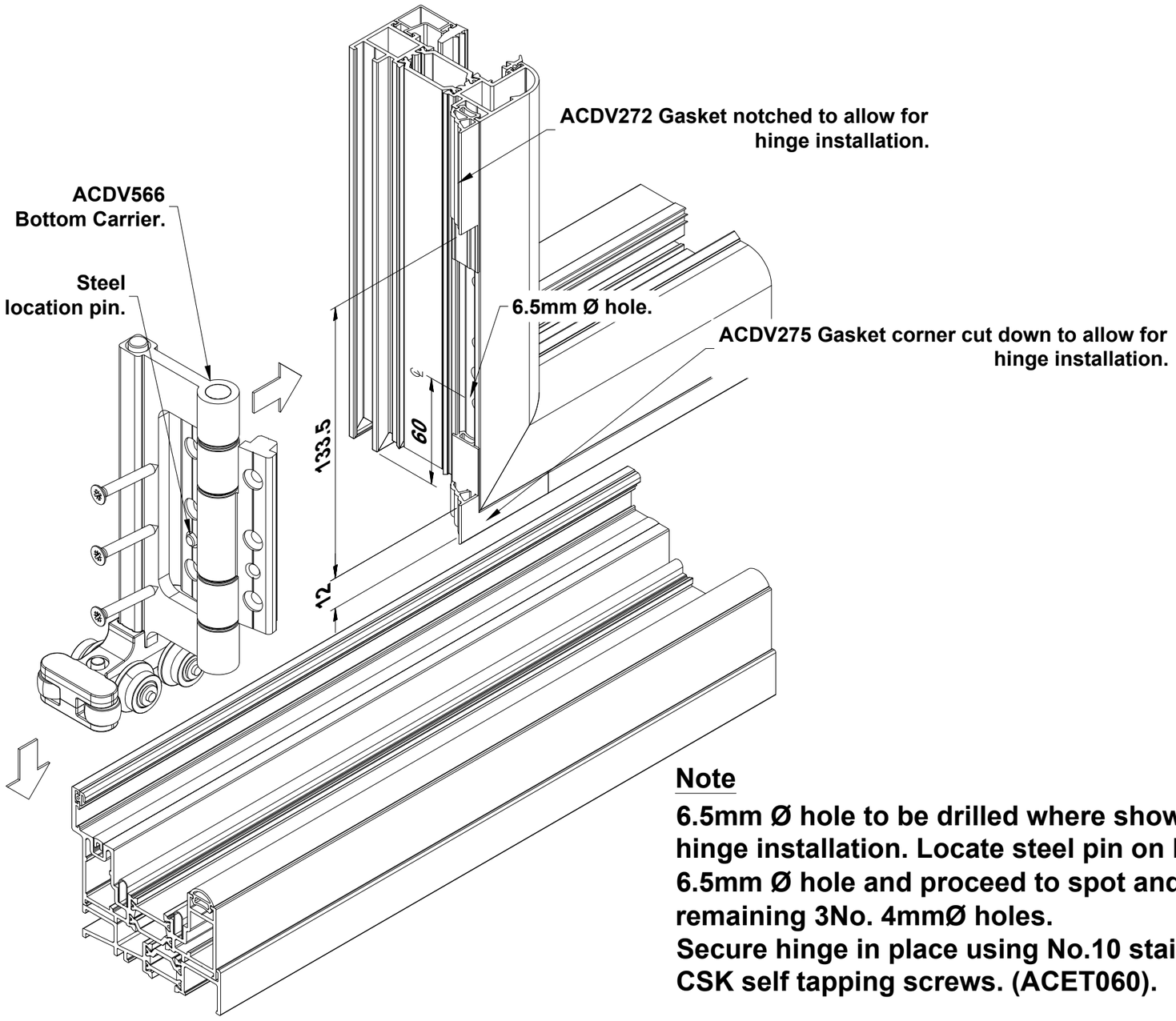

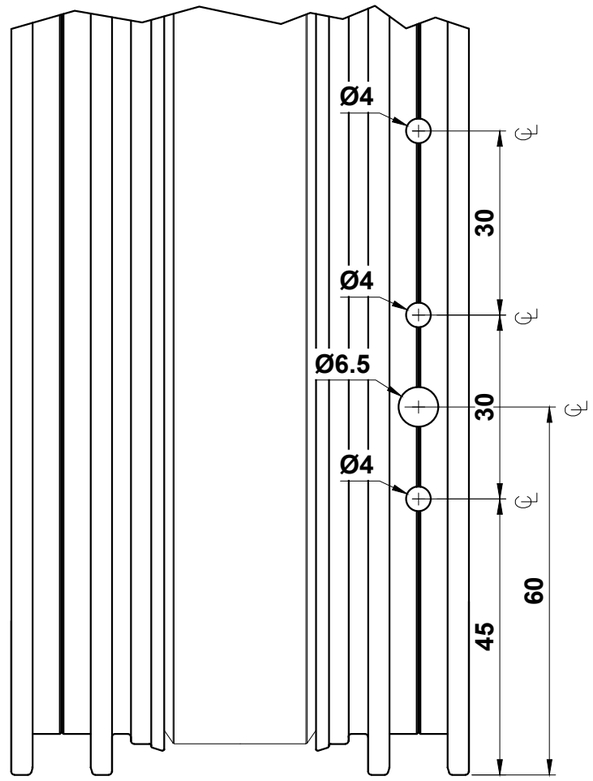

Note

6.5mm Ø hole to be drilled where shown prior to hinge installation. Locate steel pin on hinge with 6.5mm Ø hole and proceed to spot and drill remaining 3No. 4mmØ holes.
Secure hinge in place using No.10 stainless steel CSK self tapping screws. (ACET060).

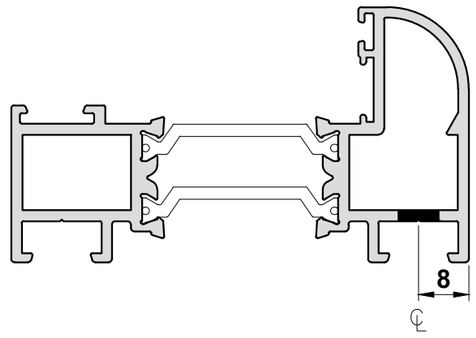

ACDV576 & ACDV577 Preparation with ACDV251 Handle

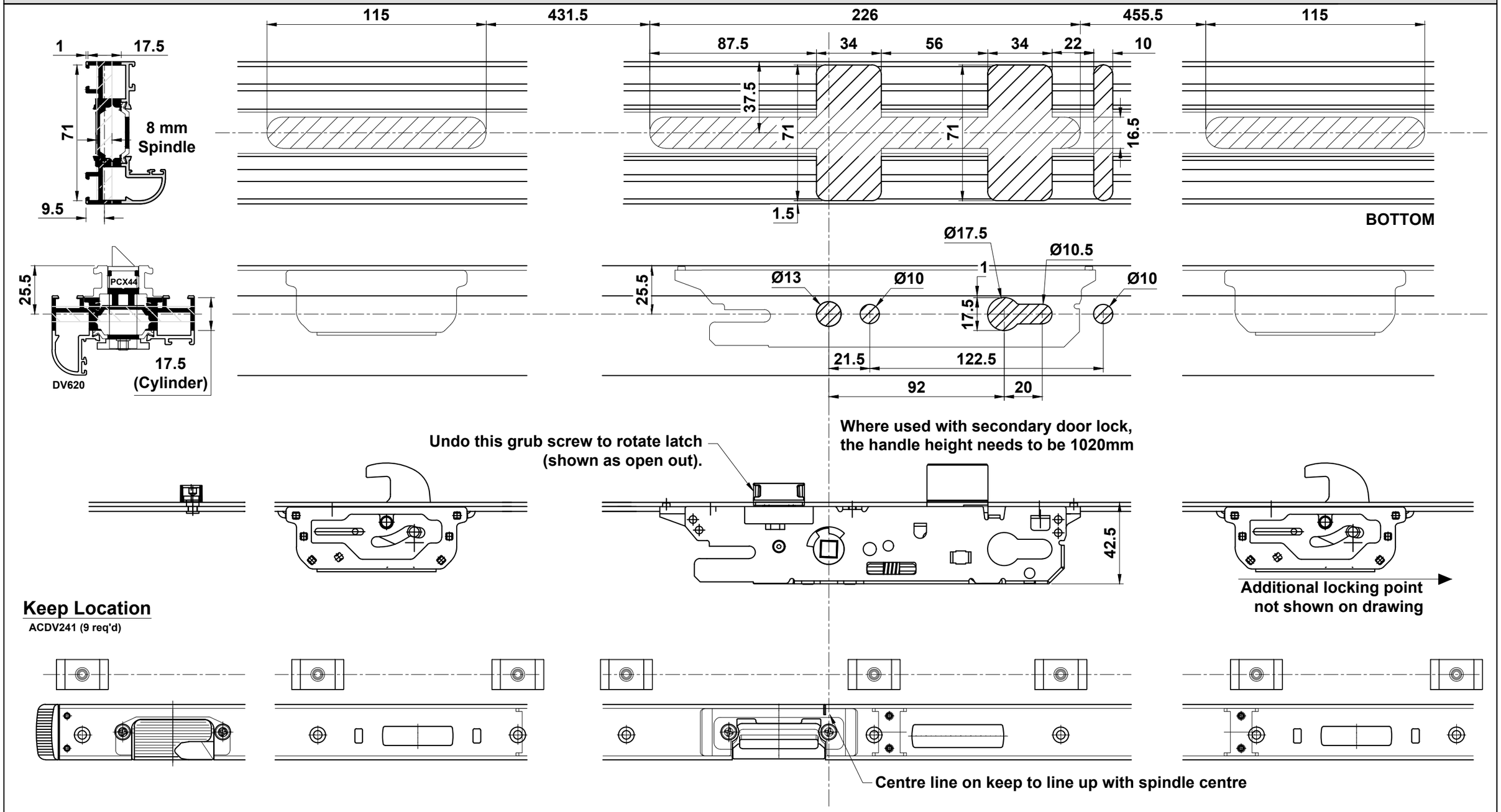

Do Not Scale From This Drawing

ACDV576 & ACDV577 lOCK Preparation with ACET486 & ACSM006 Handle

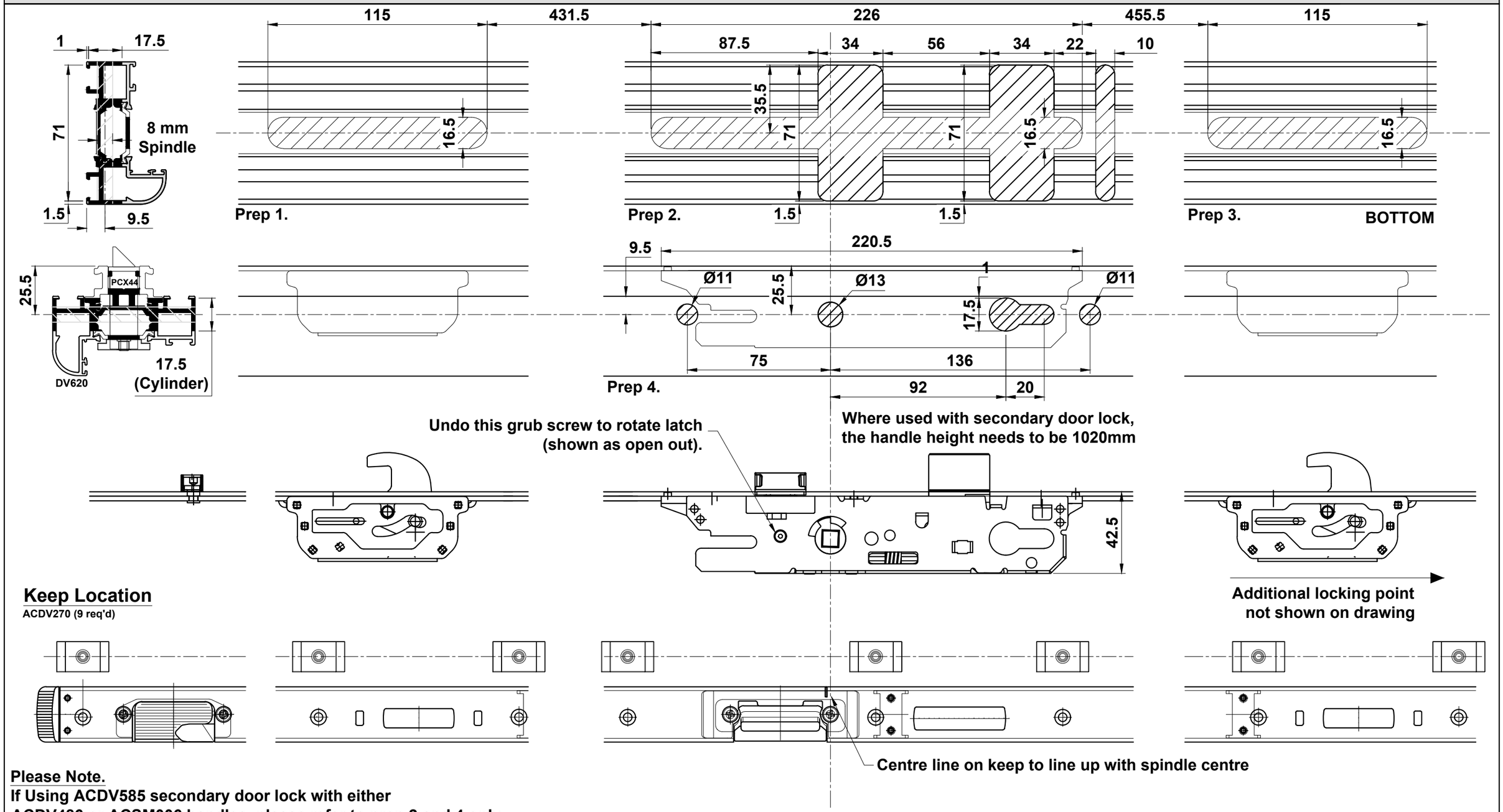

Please Note.
If Using ACDV585 secondary door lock with either ACDV486 or ACSM006 handles, please refer to prep 2 and 4 only .

Do Not Scale From This Drawing

ACET288 Shoot bolt keep location and assembly.

Open out double swing door.
Viewed from Outside.

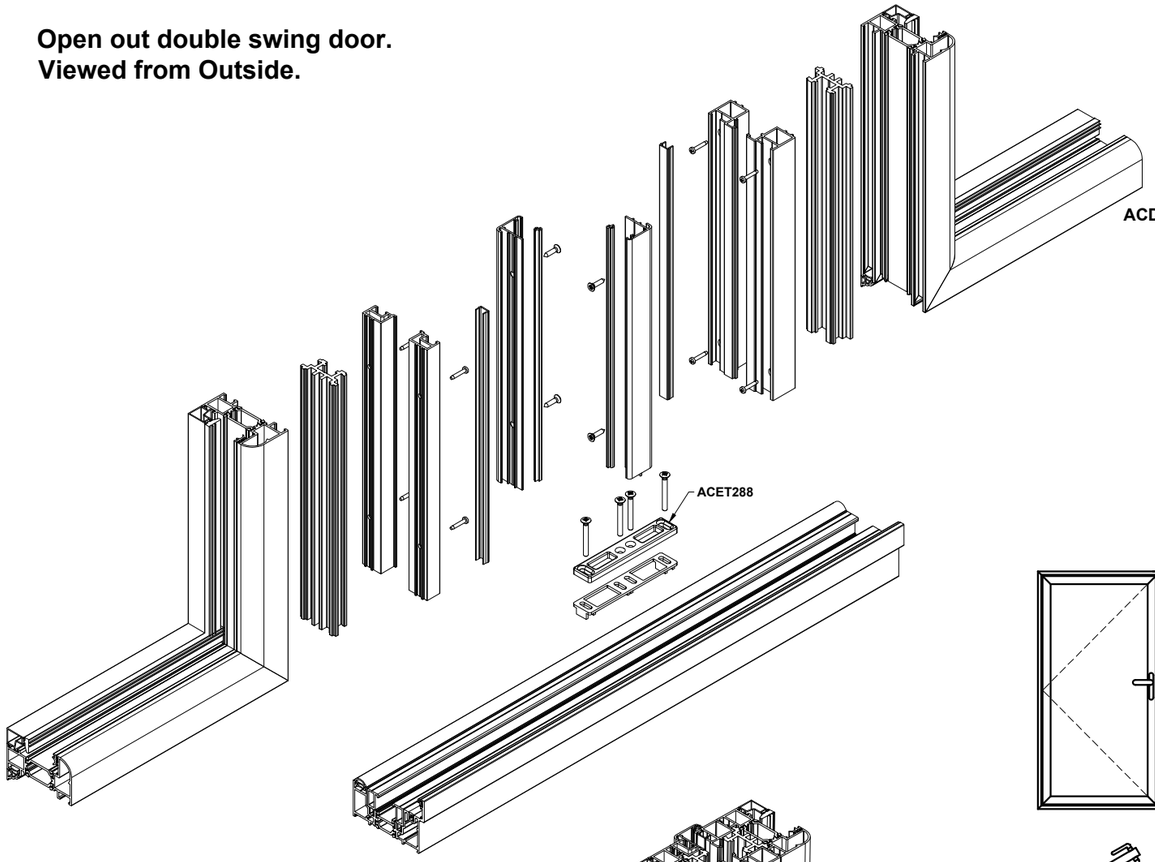

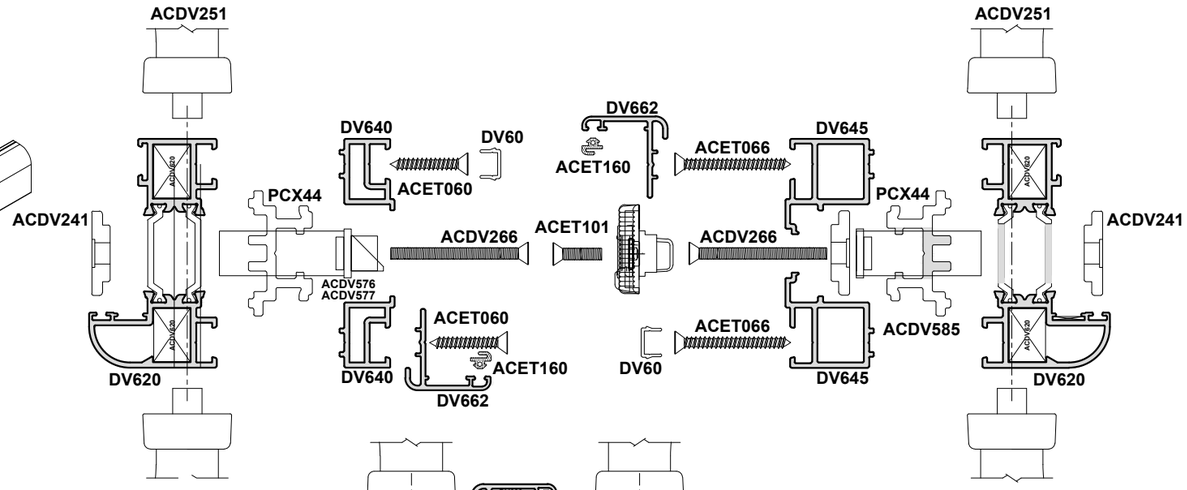

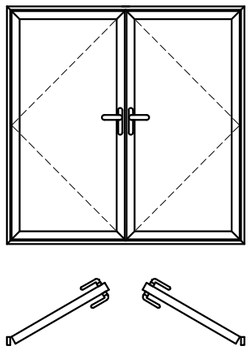

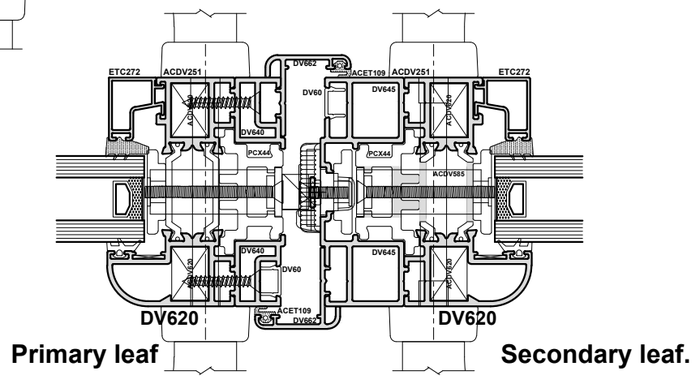

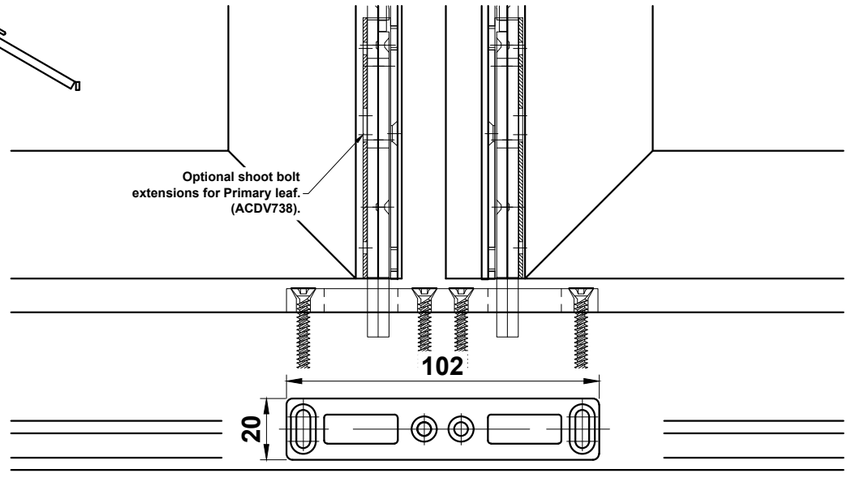

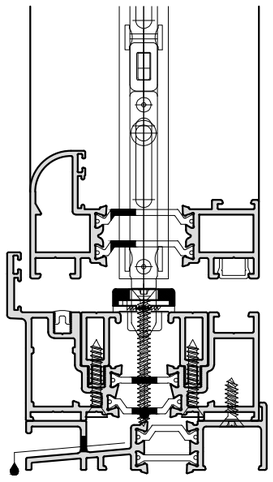

Do Not Scale From This Drawing

ACDV586 Secondary Door Lock.

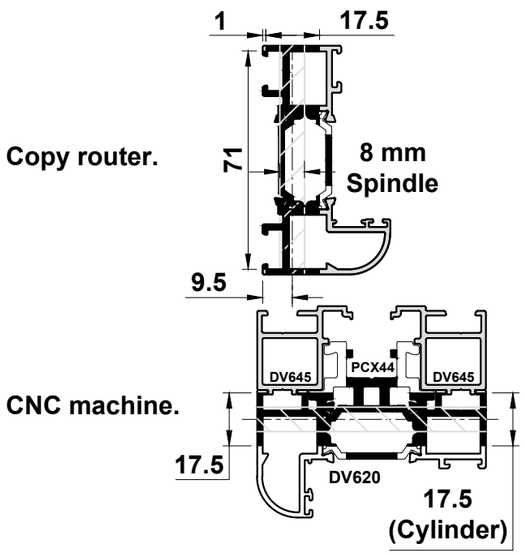

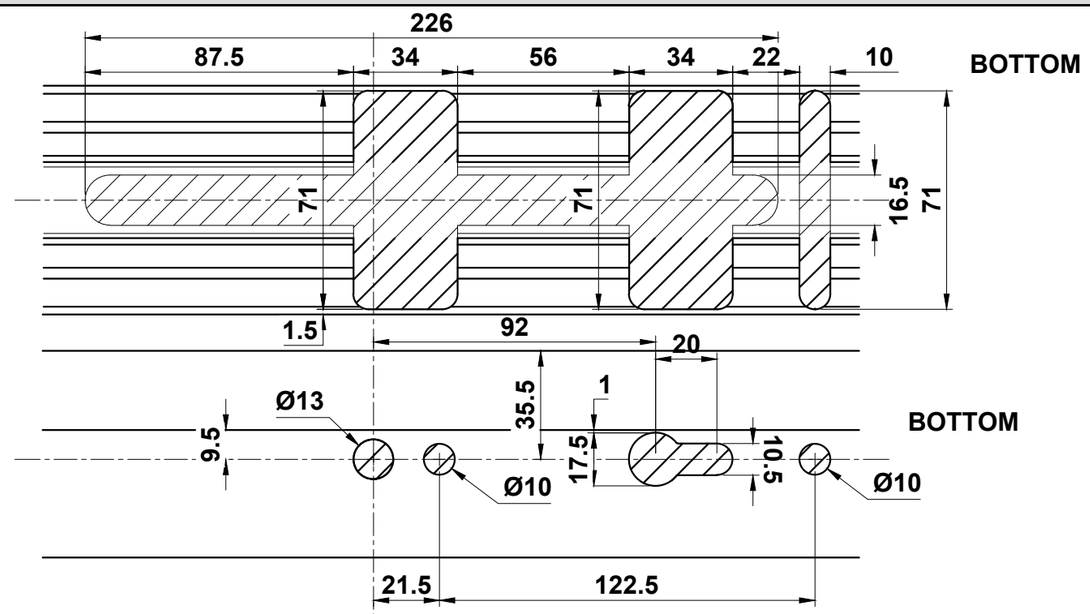

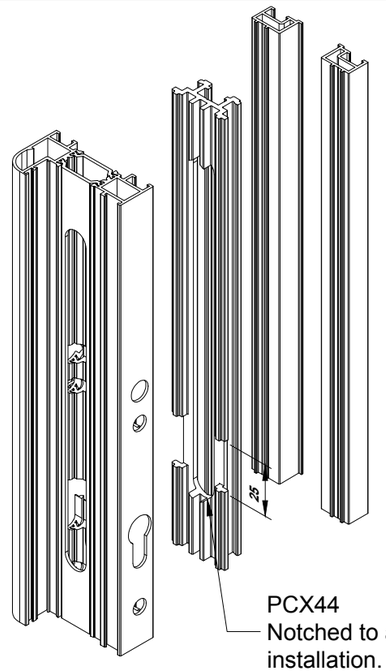

PCX44
Notched to allow cylinder installation.

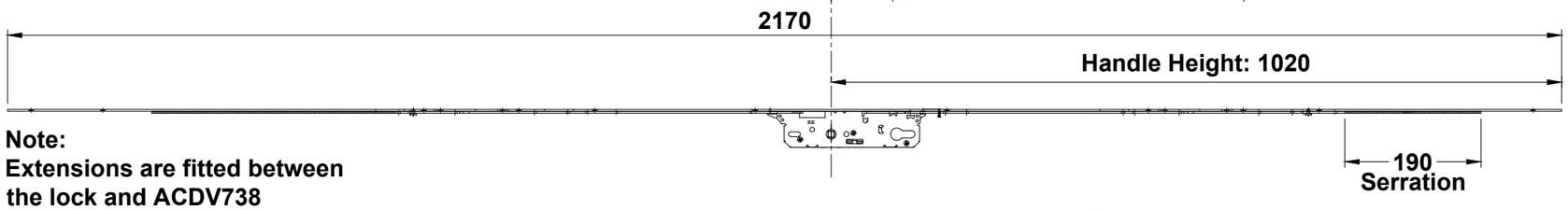

Note:
Extensions are fitted between the lock and ACDV738 shoot bolt.

Maximum overall door height (mm) including outer frame:

Without Extension	ACDV742 200mm Extension	ACDV744 400mm Extension
2229	2429*	2629*

DV610/DV612 Standard Threshold

*Maximum sash height is 2200mm. Sizes shown here only indicate sizes with extensions.
**Minimum cut off positions are required to fit the shoot bolts.

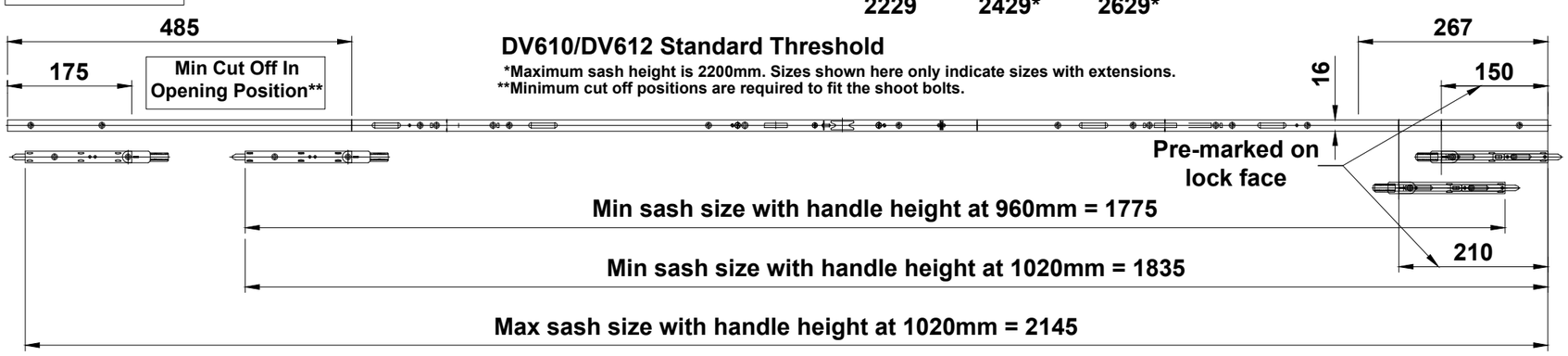

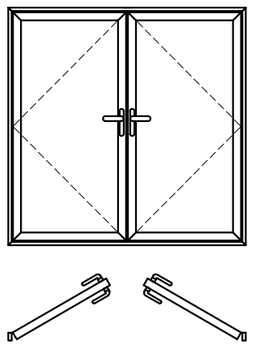

Do Not Scale From This Drawing

ACDV663 Shootbolt Preparation with ACDV226 Handle

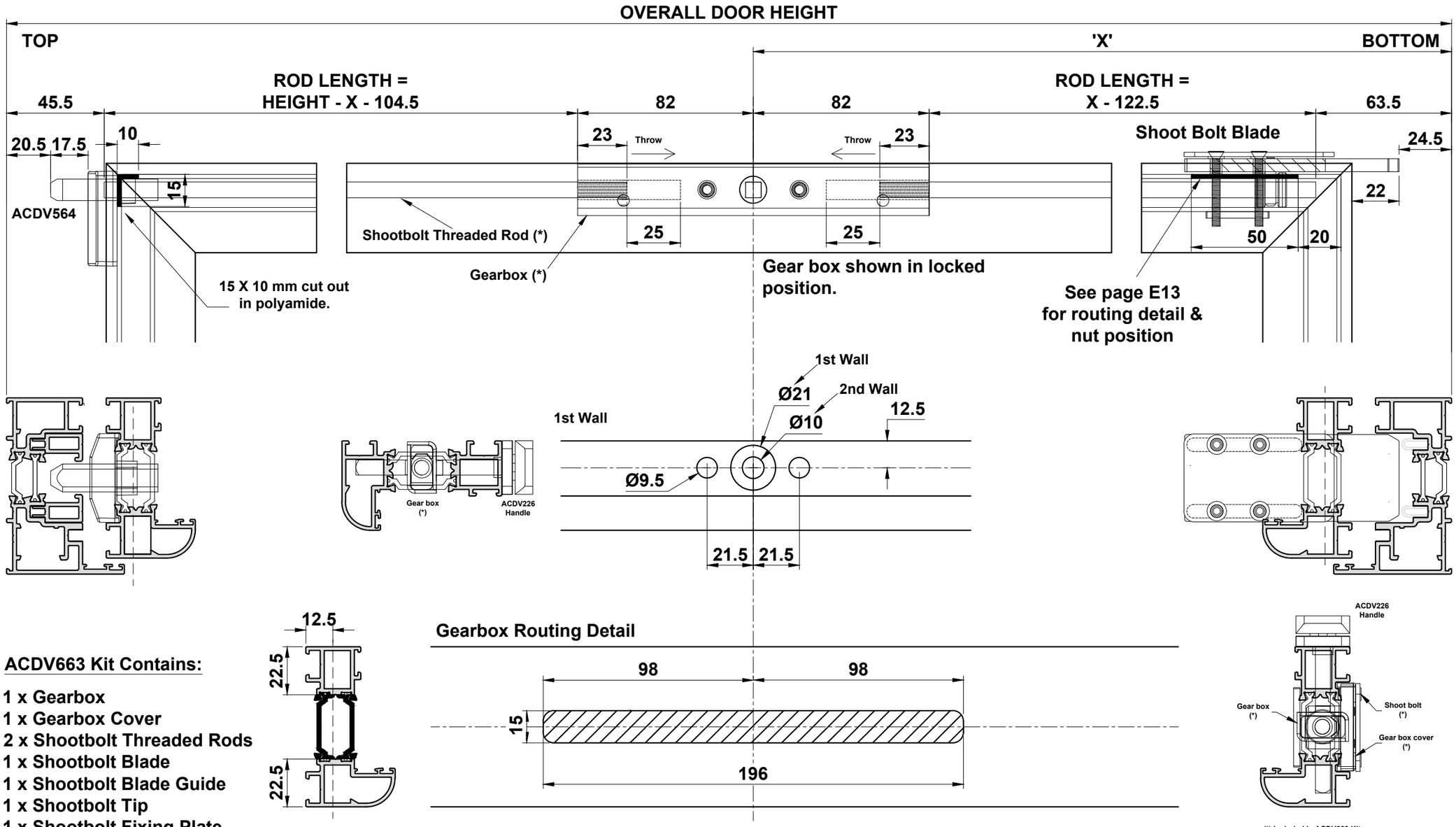

ACDV663 Kit Contains:

1 x Gearbox
1 x Gearbox Cover
2 x Shootbolt Threaded Rods
1 x Shootbolt Blade
1 x Shootbolt Blade Guide
1 x Shootbolt Tip
1 x Shootbolt Fixing Plate

Do Not Scale From This Drawing

ACDV663 Shootbolt Blade Detail

Installation Steps:

1. Position gearbox and attached threaded bar into section prior to assembling the sash
2. Adjust drive nut to the position shown below
3. Place shootbolt blade over the nut ensuring the fork of the blade is either side of the nut
4. Place the stainless steel plate over the blade and secure in position using M4x30 into fixing plate

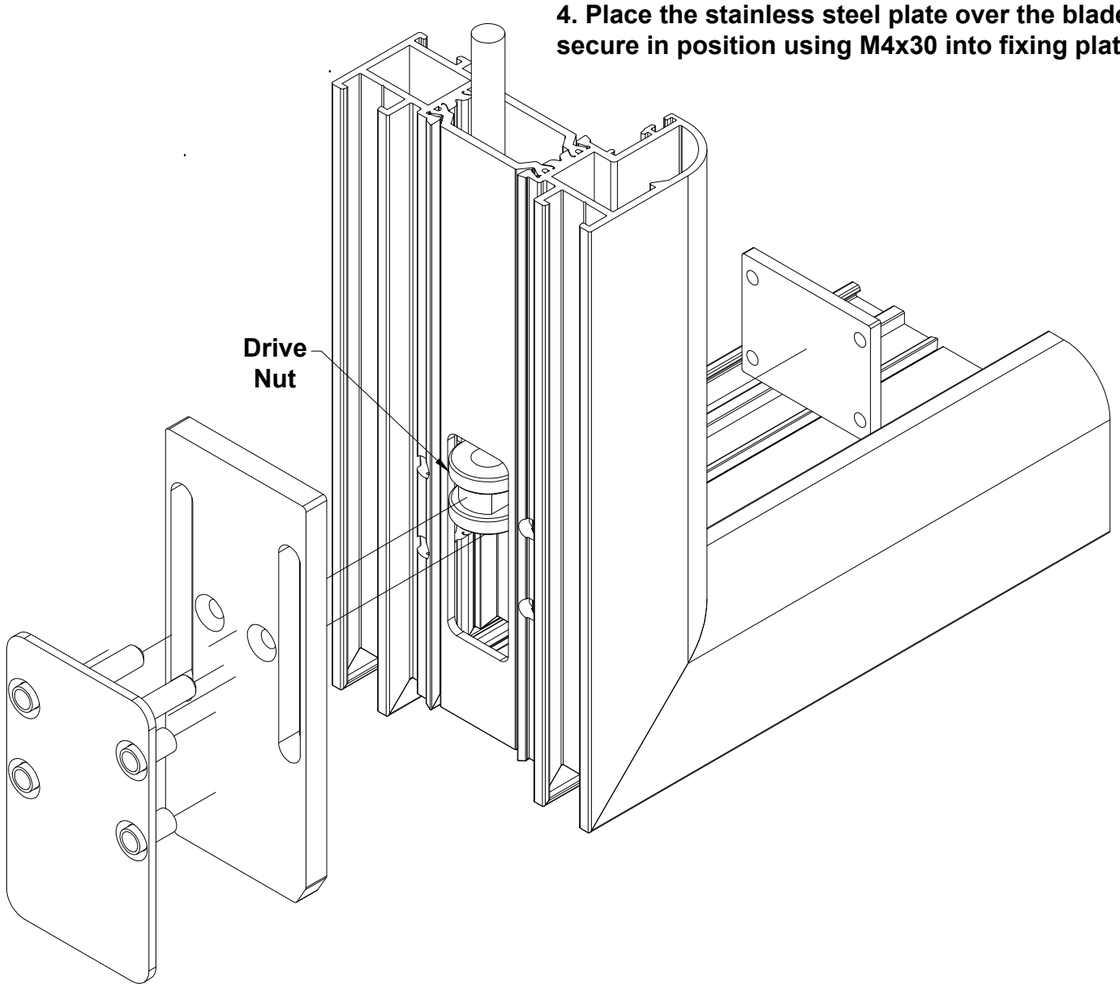

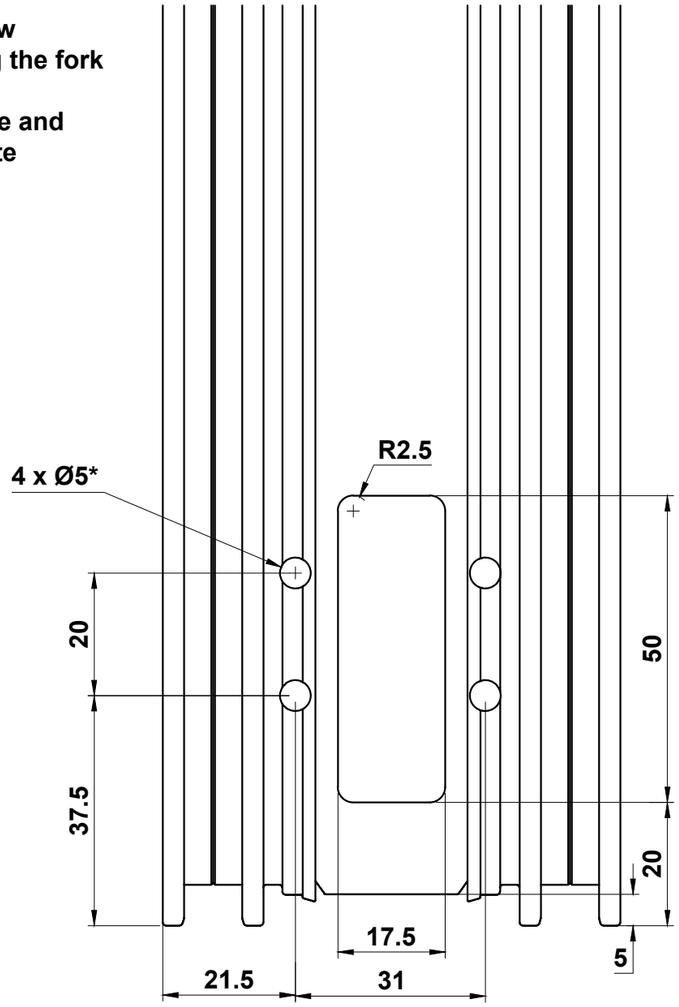

*These 4 holes are positioned inline with the section wall. We therefore recommended using a router.

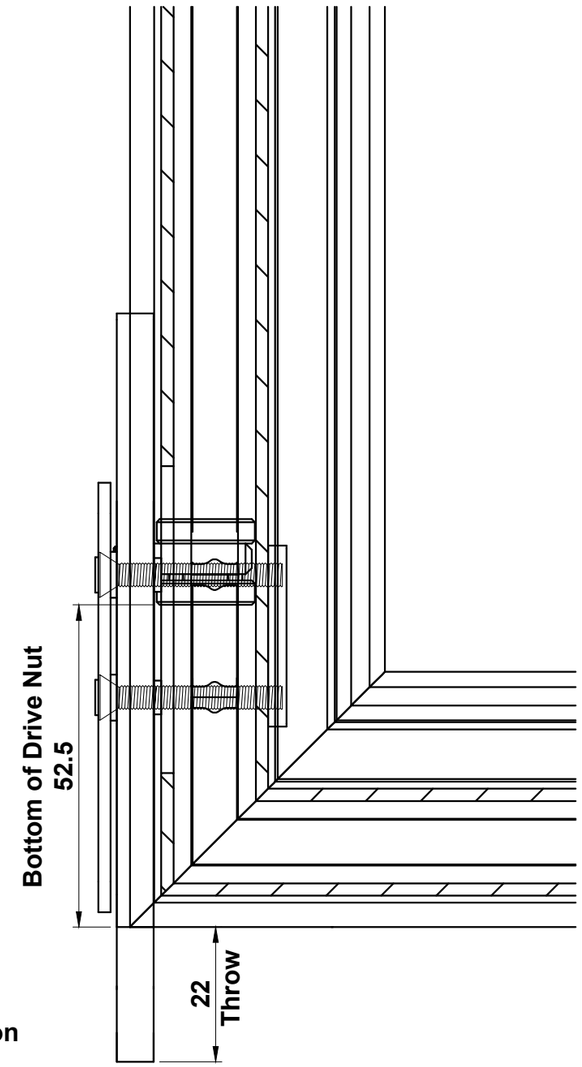

Do Not Scale From This Drawing

Rebate Adapter End Caps.

Primary door.

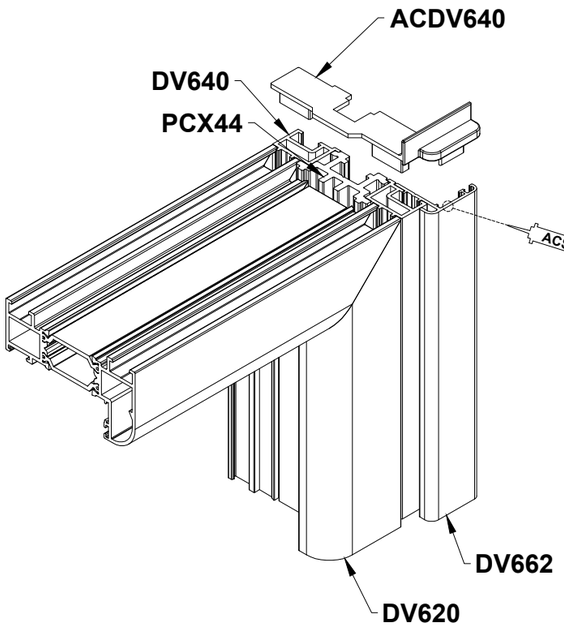

Secondary door.

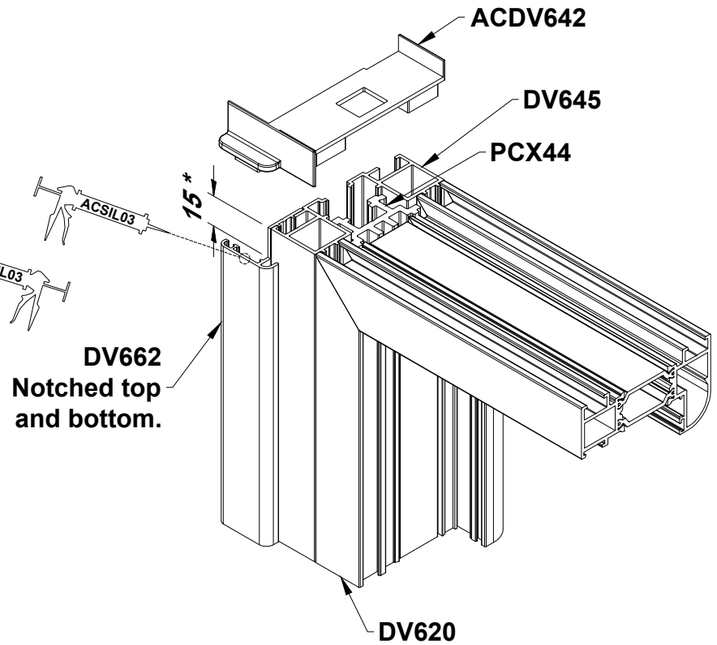

Rebate adapter.

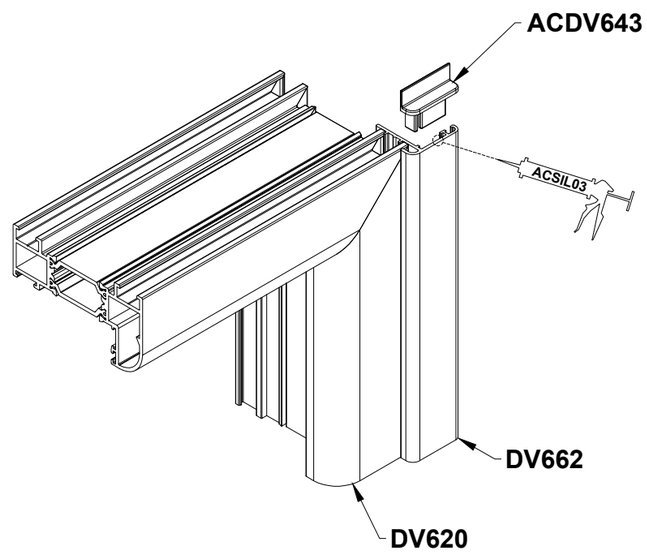

DV662 preparation detail for ACDV642 end cap.

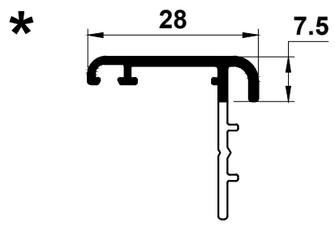

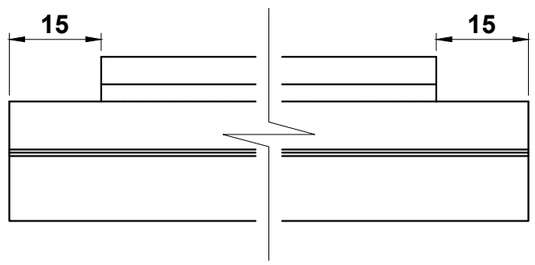

Do Not Scale From This Drawing

DV38 Preparation

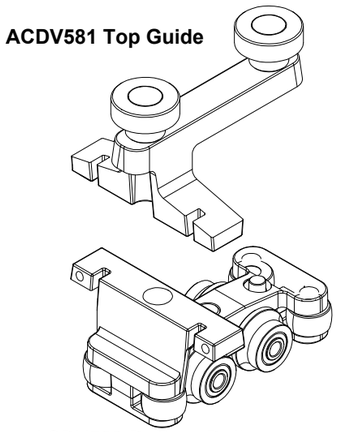

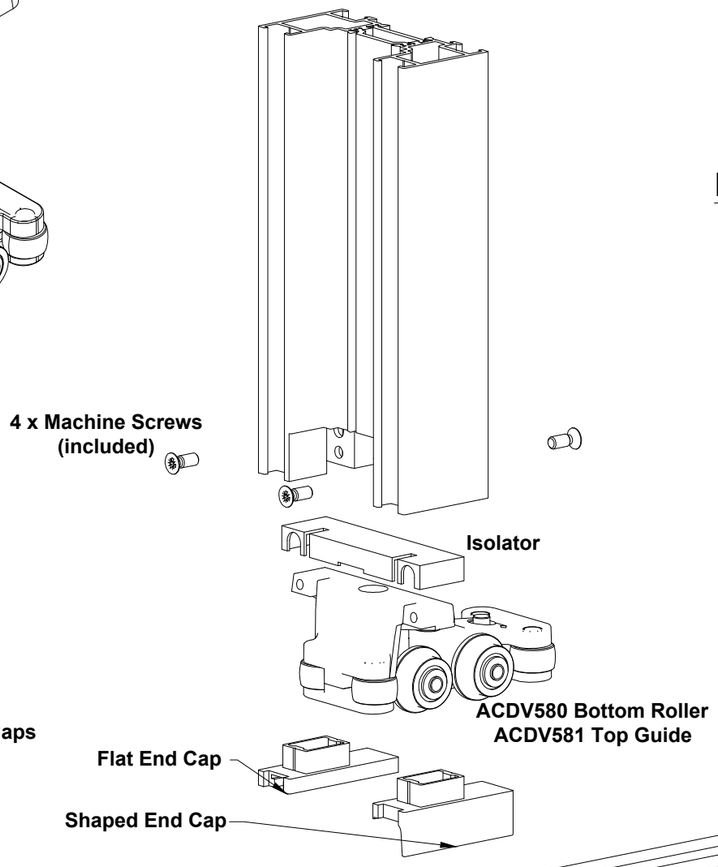

ACDV590 Kits Contain:

- 10 Pairs Flat End Caps
- 10 Pairs Shaped End Caps
- 10 Pairs of Isolators

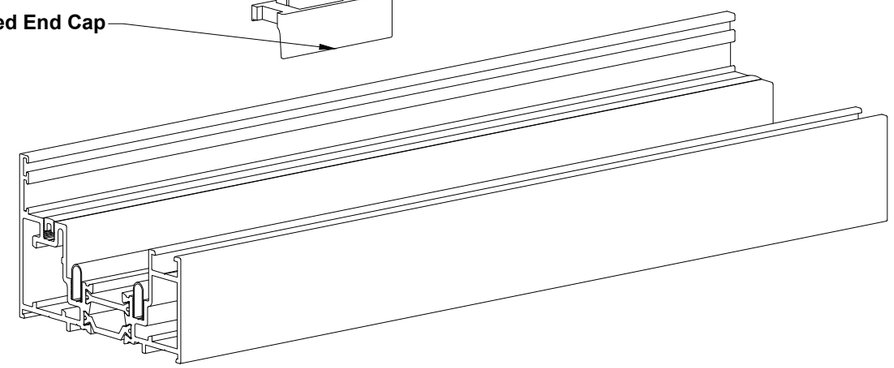

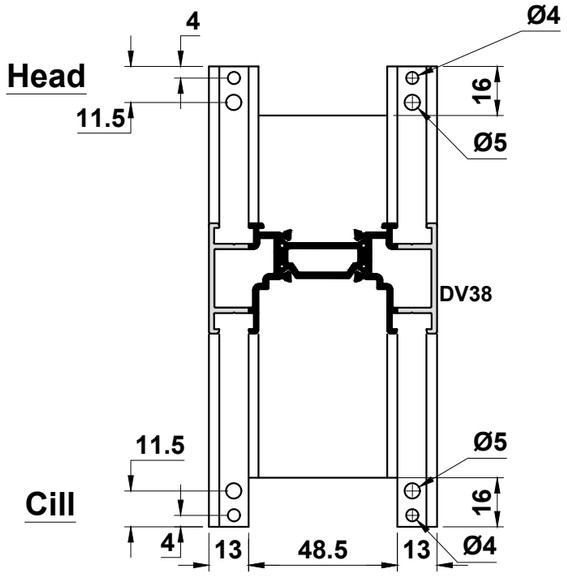

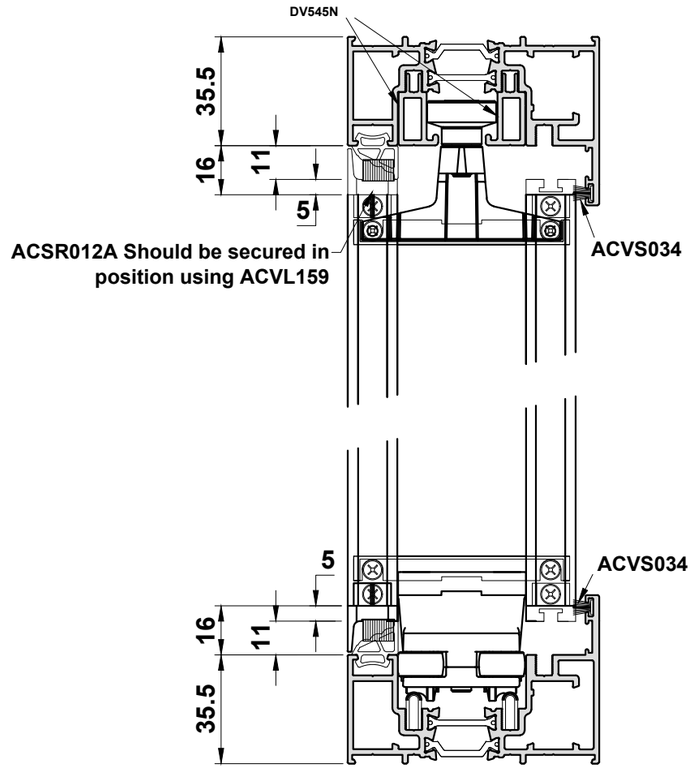

Do Not Scale From This Drawing

Glazing Details

Internally Beaded

24mm Glazing

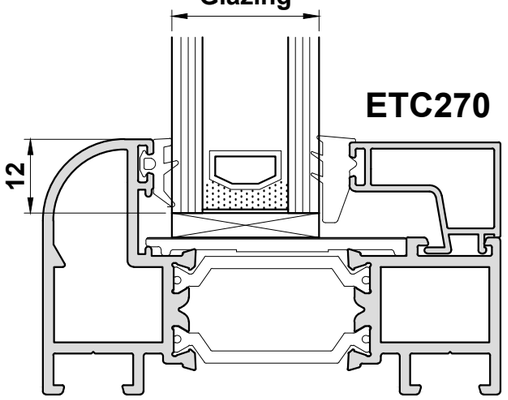

DV620
DV622

24mm Units	
BEADS	GASKET
ETC270	Outside: ACET842 3mm 'E' Gasket
	Inside: ACET840 5mm Wedge Gasket

28mm Glazing

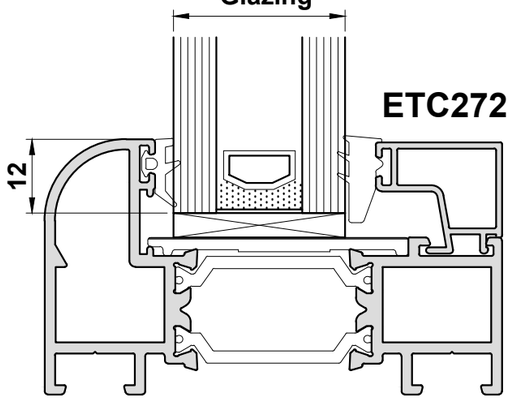

DV620
DV622

28mm Units	
BEADS	GASKET
ETC272	Outside: ACET842 3mm 'E' Gasket
	Inside: ACET840 5mm Wedge Gasket

32mm Glazing

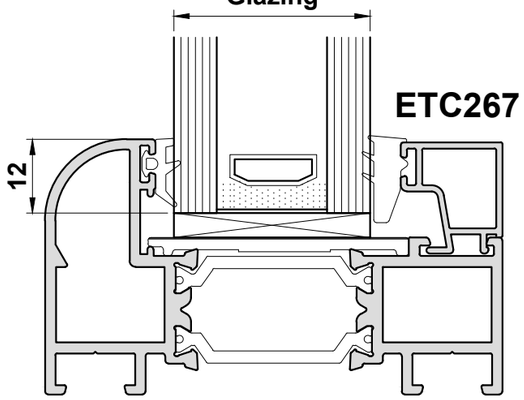

DV620
DV622

32mm Units	
BEADS	GASKET
ETC267	Outside: ACET842 3mm 'E' Gasket
	Inside: ACET840 5mm Wedge Gasket

40mm Glazing

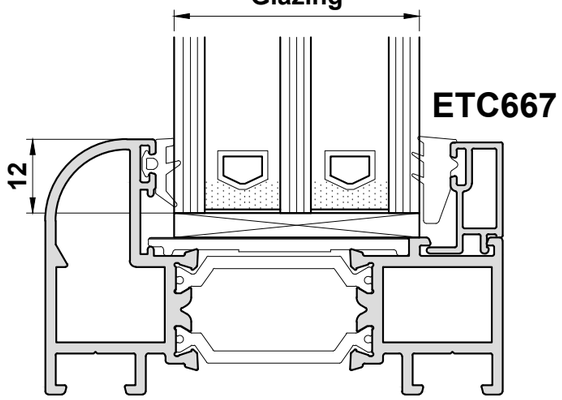

DV620
DV622

40mm Units	
BEADS	GASKET
ETC667	Outside: ACET842 3mm 'E' Gasket
	Inside: ACET840 5mm Wedge Gasket

Typical Toe & Heel Locations

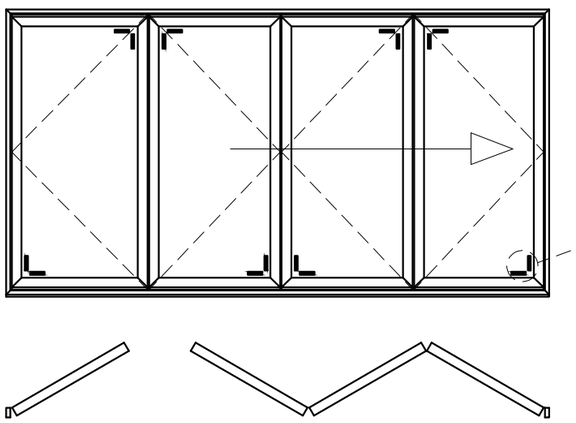

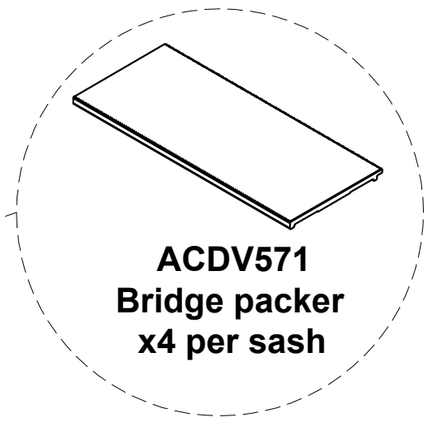

Do Not Scale From This Drawing

Hinge Location Details

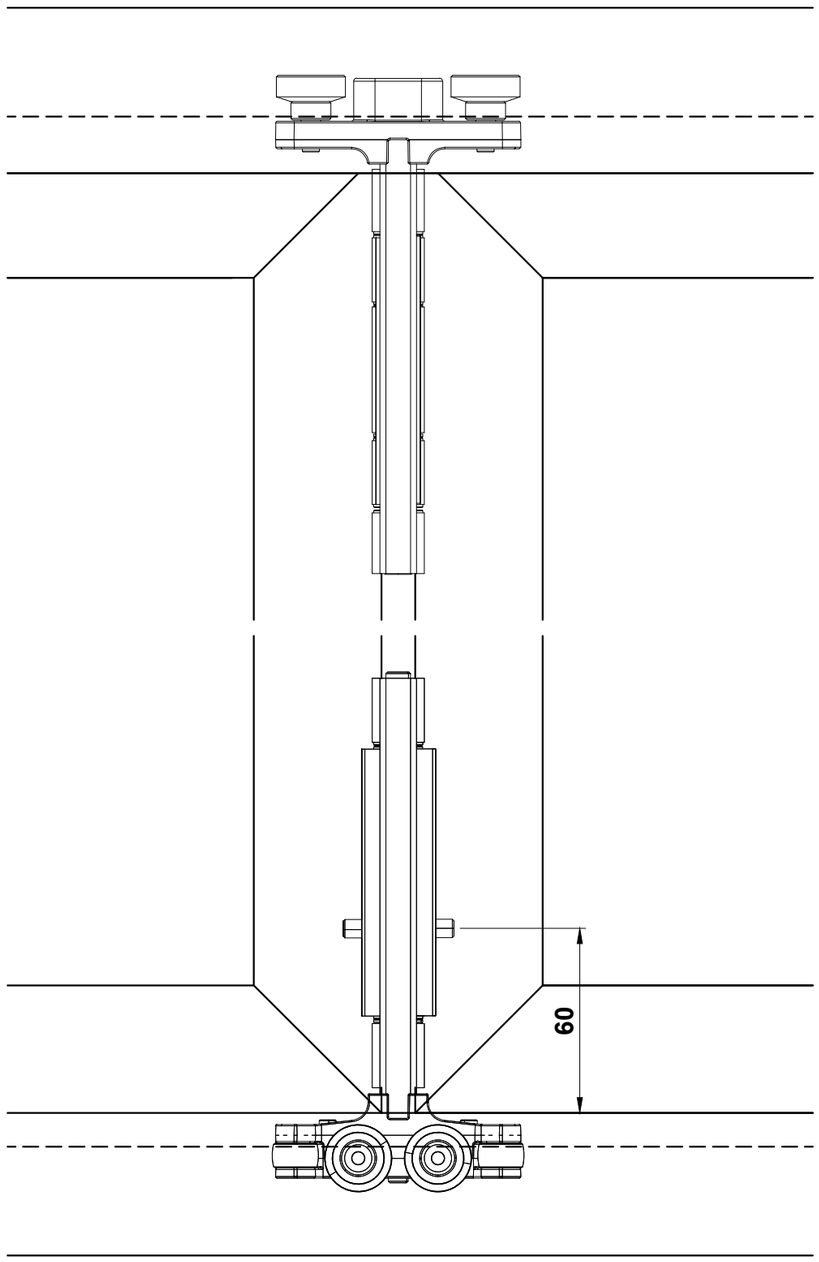

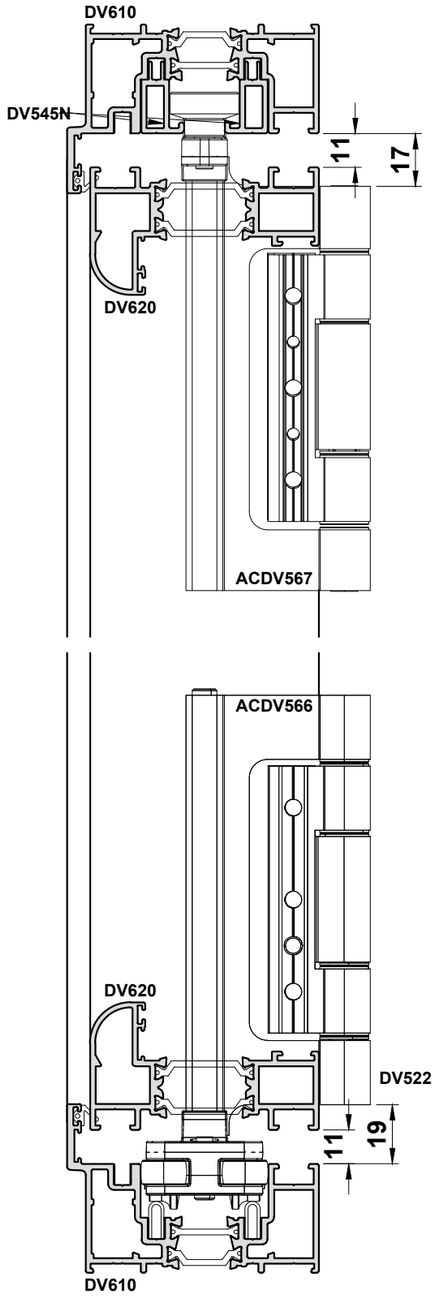

Typical Hinge Layout:
A = ACDV331 Intermediate Hinge
B = ACDV566 Bottom Roller Carrier
C = ACDV567 Top Guide Carrier
D = ACDV274 'D' Handle Hinge

Note:
Once hinges are set into position, replace centre machine screw with a self tapping screw for permanent fixing.

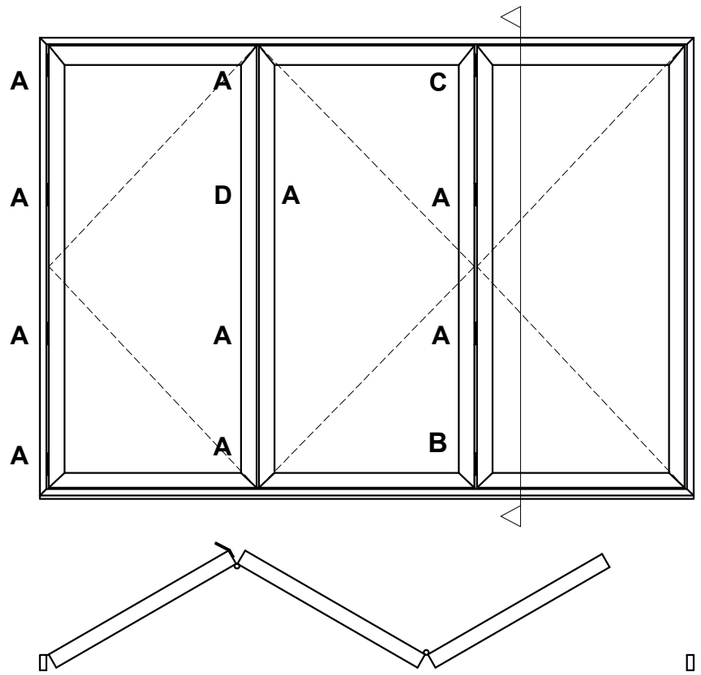

ACDV275 & ACDV375 Details

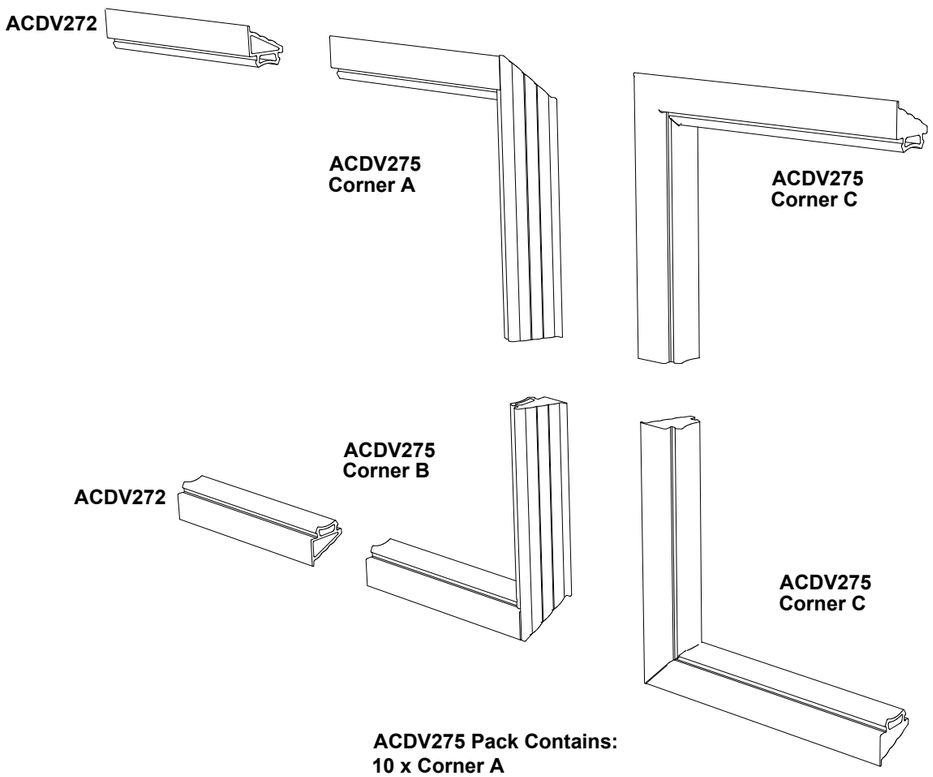

ACDV275 Pack Contains:
10 x Corner A
10 x Corner B
20 x Corner C

Packs of each corner type may also be ordered as:
ACDV275A, ACDV275B or ACDV275C

Outer Frame Gasket Detail

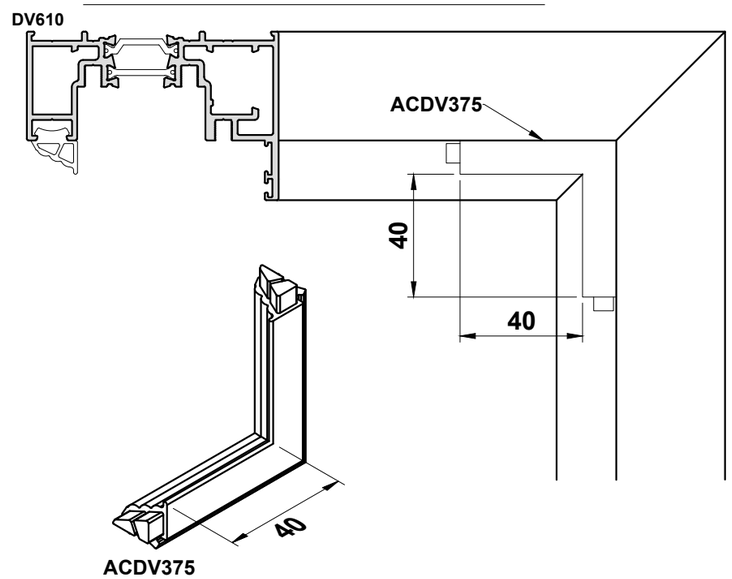

Example Vent Gasket Detail

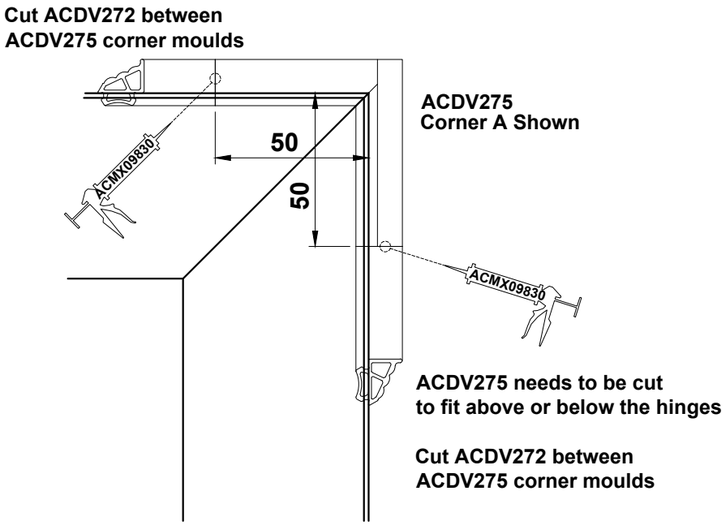

Do Not Scale From This Drawing

ACDV305 installation

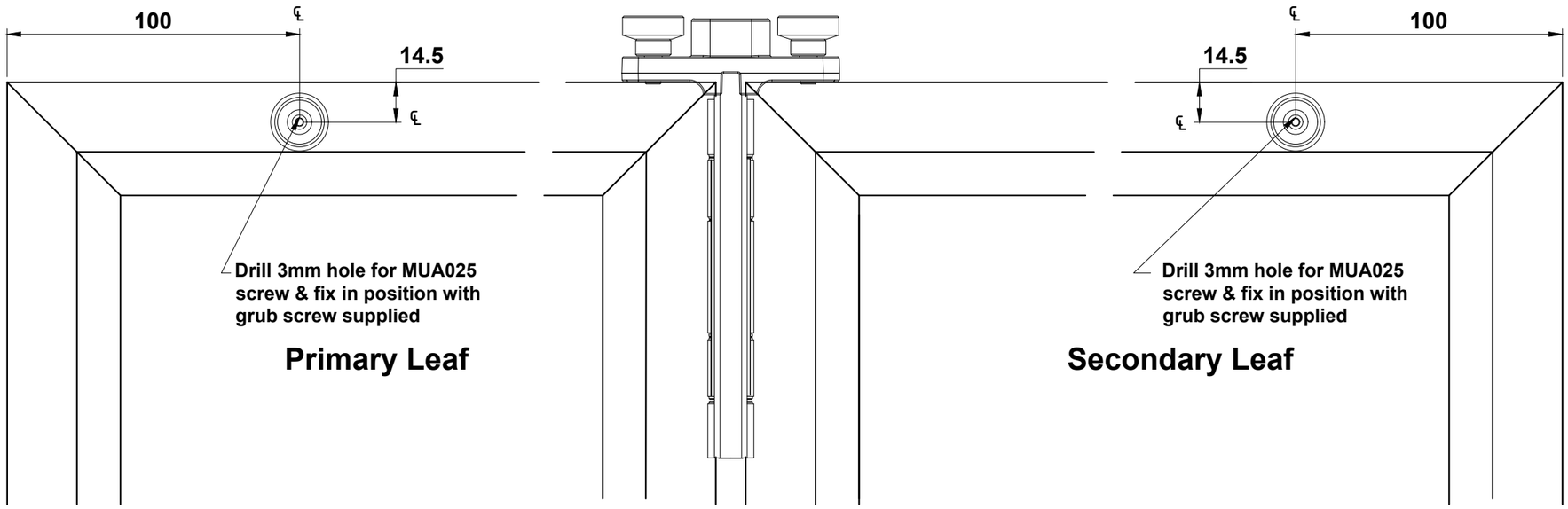

ACDV305 Kit Contains

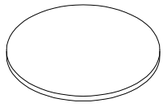

1 x Clear Polyurethane Pad

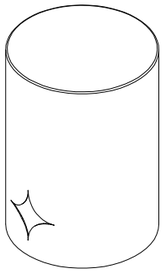

2 x 35mm Magnetic Holders

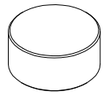

2 x Magnets

2 x Threaded Base

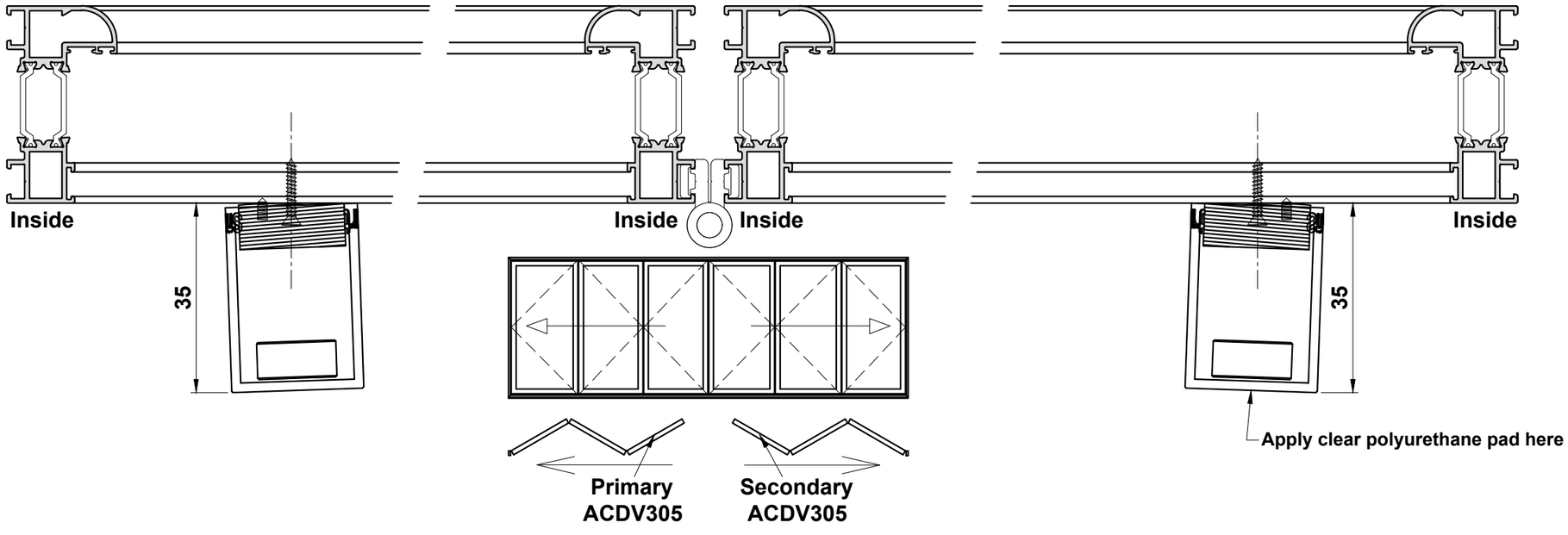

Do Not Scale From This Drawing

Do Not Scale From This Drawing

Section F

Sawing Tables
Open Out

Section F

Cutting Information

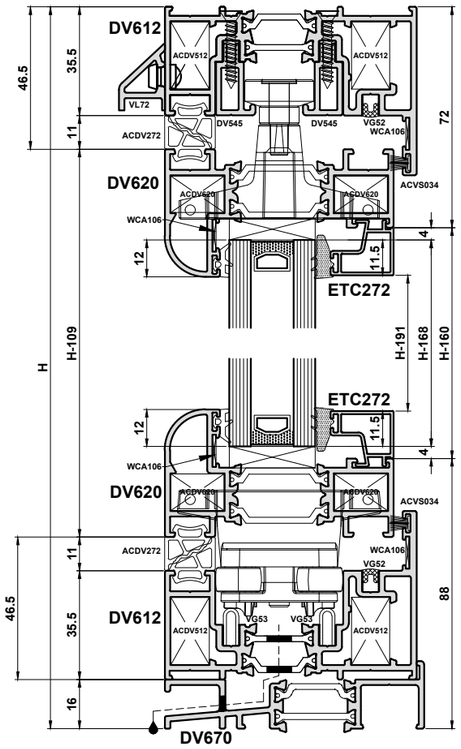

Sections

DV60*		4		H-109
DV38		1		H-119
DV545		1		W-36
DV545		1		150
DV545		1		W-186
DV612		2		H-16
DV612		2		W
DV620		6		H-109
DV620		6		W/3-60
DV640		2		H-109
DV662		2		H-109
DV670		1		W
PCX38		1		H-135
PCX44		1		H-109
VG52		2		H-70
VG52		4		H-87
VG52		2		W-71
VG53		2		W-36
VL72		1		W-10
Bead		6		H-191
Bead		6		W/3-111

*Note: DV60 cover profile is optional.

Glass	
3 x	W/3 - 119
	H - 168

ACDV226	1	Shootbolt Handle
ACDV234	1	'D' Handle Hinge
ACDV241	18	Lock & Keep Fixing Plate
ACDV251	1	Lever/Lever Handle
ACDV258	1	Cylinder
ACDV272	(Sash W - 78) (Sash H - 78)	Sealing Gasket
ACDV272	Cut between hinges.(Sash)	Sealing Gasket
ACDV272	2 x Frame W - 36	Sealing Gasket
ACDV272	Cut between hinges.(Frame)	Sealing Gasket
ACDV275	4	Gasket Corner Moulds
ACDV331	15	Intermediate Hinges
ACDV375	4	Outer Frame Gasket Corner Moulds
ACDV512	8	DV612 Cleat
ACDV571	12	Sash Bridge Packer
ACDV576/577	1	Lock/Full Height Keep
ACDV580	1	Mullion Bottom Roller
ACDV581	1	Top Guide roller
ACDV590	2	Isolator and Woolpile Carrier
ACDV620	24	DV620 Cleat
ACDV640	1 Pair	DV662 End Caps (Primary)
ACDV643	1 Pair	DV662 End Caps (Seconday)
ACDV663	1	Shootbolt Rod Pack
ACDV670	1 Pair	DV670 End Caps
ACET060	2xW@500 ctrs 3xH@500 ctrs	Self Tapping Screws
ACET067	4	Screws
ACET133	2	M5 x 50 Handle Screw
ACET160	2x(H-109)	Frame rebate gasket
ACET840	6x (W/3 - 119) 6 x (H - 191)	External Glazing Gasket
ACET842	6x (W/3 - 121) 6 x (H - 191)	Internal Glazing Gasket
ACSG071	11	M4 x 40mm Machine Screw
ACSR012A	4x47mm	Woolpile For End Caps
ACVL059	1 Pair	VL72 End Caps
ACVL061	W @ 500 ctrs	Rivet for VL72
ACVS034	2x(H-109) 2x(W-90)	Rebate woolpile
WCA106	16	Chevron
+ Optional: 1 x ACDV305 Magnetic Catch		

Type 1e

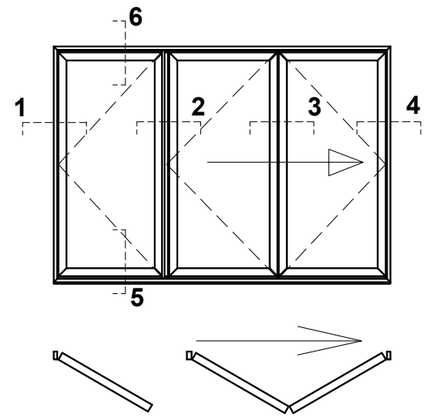

Important note
All deductions regarding heights are inclusive of DV670/DV570.
This is due to there not being a face drained option, thus a sub-cill must always be used to channel the drainage away from the frame in the approved manner.

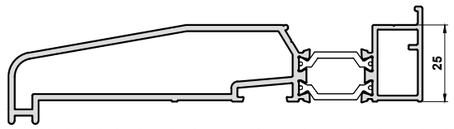

Increase all height deductions by 9mm or 18mm when using the projecting sub-cills.
9mm Deduction - ETC451, ETC452, ETC457, ETC458 & ETC479
18mm Deduction - ETC477

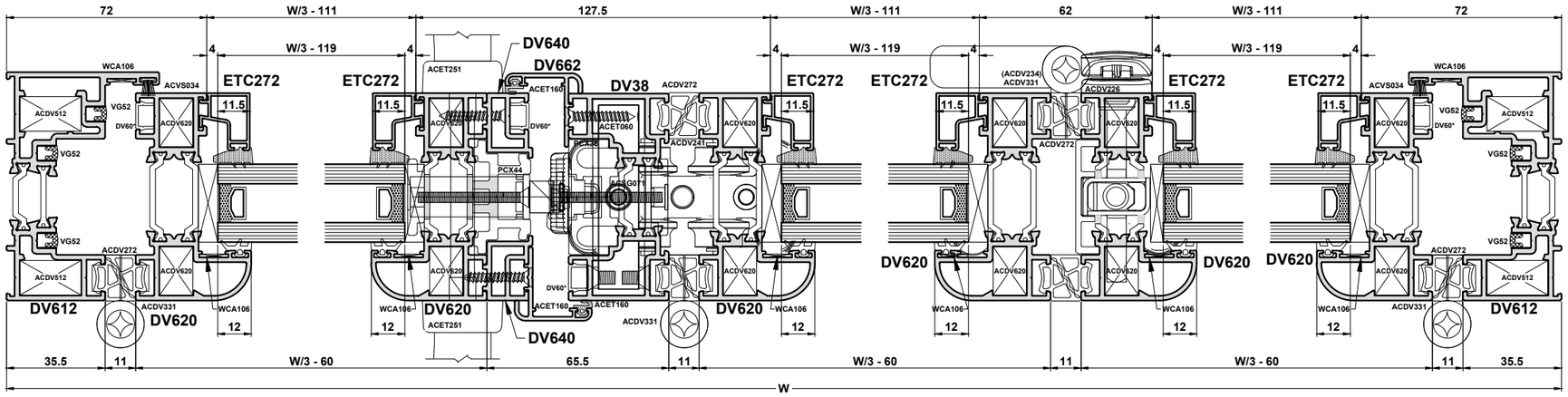

Do Not Scale From This Drawing

Cutting Information

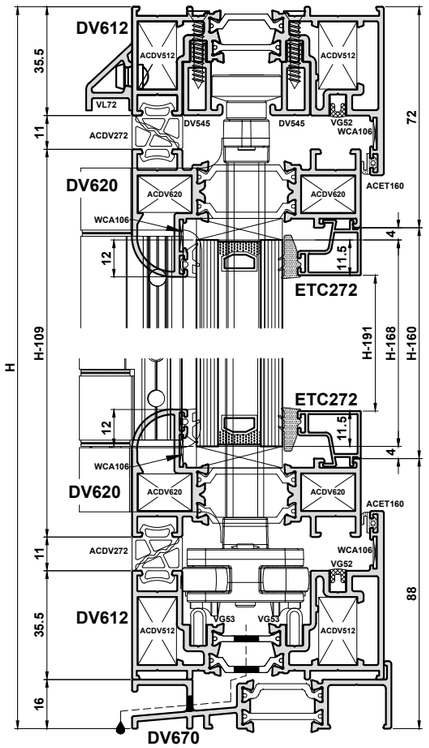

Sections

DV60*		3		H-109
DV545		1		W-36
DV545		1		150
DV545		1		W-186
DV545		2		H-68
DV612		2		H-16
DV612		2		W
DV620		6		H-109
DV620		6		W/3-44.5
DV640		2		H-109
DV662		1		H-109
DV670		1		W
PCX44		1		H-109
VG52		2		H-70
VG52		2		H-87
VG52		2		W-71
VG53		2		W-36
VL72		1		W-10
Bead		6		H-191
Bead		6		W/3-96.5

*Note: DV60 cover profile is optional.

Glass	
3 x	W/3 - 104.5
	H - 168

ACDV226	1	Shootbolt Handle
ACDV234	1	'D' Handle Hinge
ACDV241	18	Lock & Keep Fixing Plate
ACDV251	1	Lever/Lever Handle
ACDV258	1	Cylinder
ACDV266	18	45mm Lock & Keep Fixing Screw
ACDV272	(Sash W - 78) (Sash H - 78)	Sealing Gasket
ACDV272	Cut between hinges.(Sash)	Sealing Gasket
ACDV272	2 x Frame W - 36	Sealing Gasket
ACDV272	Cut between hinges.(Frame)	Sealing Gasket
ACDV275	4	Gasket Corner Moulds
ACDV331	9	Intermediate Hinges
ACDV375	4	Outer Frame Gasket Corner Moulds
ACDV512	8	DV612 Cleat
ACDV566	1	Bottom Roller Hinge
ACDV567	1	Top Guide Hinge
ACDV571	12	Sash Bridge Packer
ACDV620	24	DV620 Cleat
ACDV640	1 Pair	DV662 End Caps (Primary)
ACDV663	1	Shootbolt Rod Pack
ACDV670	1 Pair	DV670 End Caps
ACDV576/577	1	Lock/Full Height Keep
ACET060	2xW@500 ctrs 3xH@500 ctrs	Self Tapping Screws
ACET067	4	Screws
ACET133	2	M5 x 50 Handle Screw
ACET160	3x(H-109) 2x(W-90)	Frame rebate gasket
ACET840	6x (W/3 - 104) 6 x (H - 191)	External Glazing Gasket
ACET842	6x (W/3 - 127) 6 x (H - 191)	Internal Glazing Gasket
ACVL059	1 Pair	VL72 End Caps
ACVL061	W @ 500 ctrs	Rivet for VL72
WCA106	16	Chevron
+ Optional: 1 x ACDV305 Magnetic Catch		

Type 2e

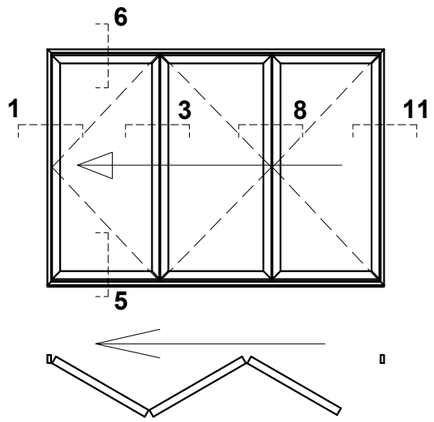

Important note
All deductions regarding heights are inclusive of DV670/DV570.
This is due to there not being a face drained option, thus a sub-cill must always be used to channel the drainage away from the frame in the approved manner.

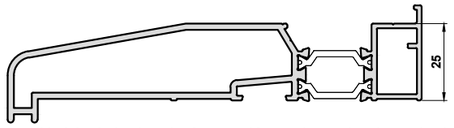

Increase all height deductions by 9mm or 18mm when using the projecting sub-cills.
9mm Deduction - ETC451, ETC452, ETC457, ETC458 & ETC479
18mm Deduction - ETC477

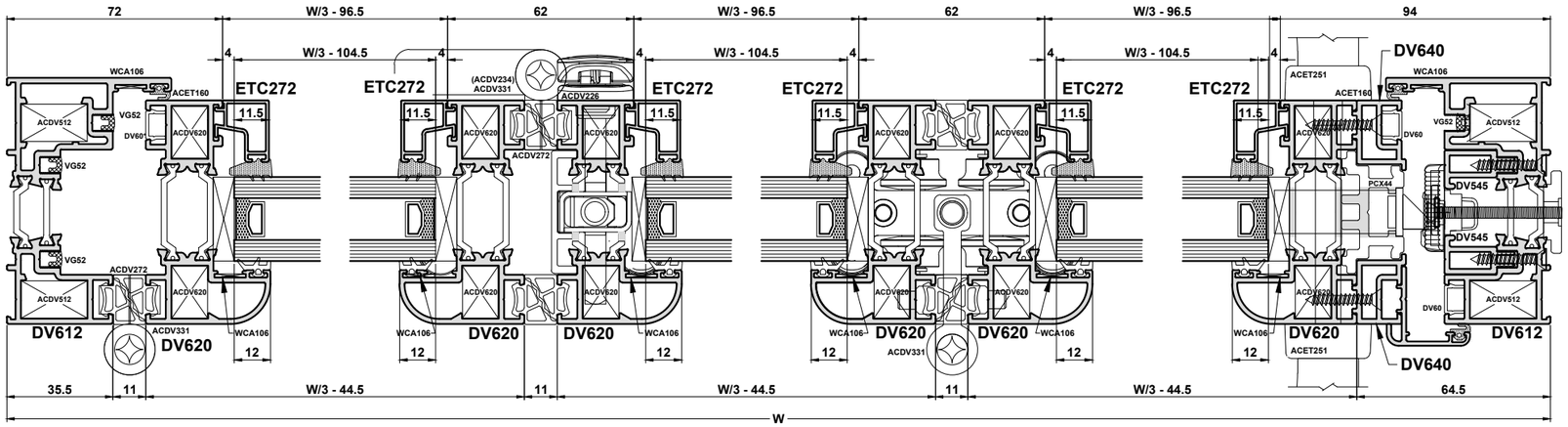

Do Not Scale From This Drawing

Cutting Information

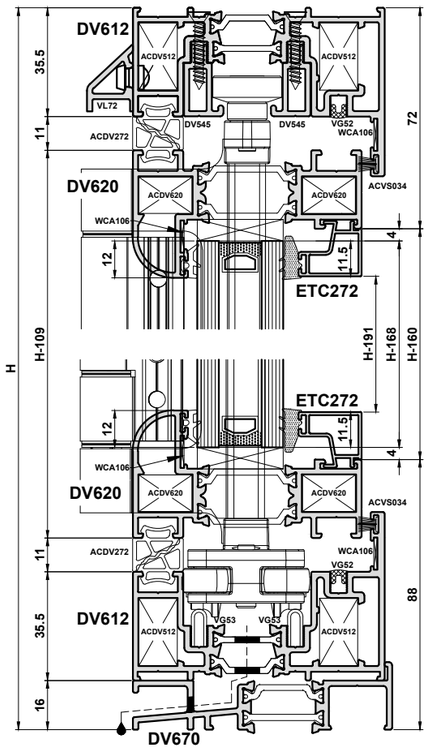

Sections

DV60*		3		H-109
DV38		1		H-119
DV545		1		W-36
DV545		1		150
DV545		1		W-186
DV612		2		H-16
DV612		2		W
DV620		8		H-109
DV620		8		W/4-43
DV662		1		H-109
DV670		1		W
VG52		2		H-70
VG52		4		H-87
VG52		2		W-71
VG53		2		W-36
VL72		1		W-10
Bead		8		H-191
Bead		8		W/4-94

*Note: DV60 cover profile is optional.

Glass	
4 x	W/4 - 102
	H - 168

ACDV226	2	Shootbolt Handle
ACDV234	2	'D' Handle hinge
ACDV272	(Sash W - 78) (Sash H - 78)	Sealing Gasket
ACDV272	Cut between hinges.(Sash)	Sealing Gasket
ACDV272	2 x Frame W - 36	Sealing Gasket
ACDV272	Cut between hinges.(Frame)	Sealing Gasket
ACDV275	4	Gasket Corner Moulds
ACDV331	16	Intermediate Hinges
ACDV375	4	Outer Frame Gasket Corner Moulds
ACDV512	8	DV612 Cleat
ACDV566	1	Bottom Roller Hinge
ACDV567	1	Top Guide Hinge
ACDV580	1	Mullion Bottom Roller
ACDV581	1	Mullion Top Guide roller
ACDV590	2	Isolator and Woolpile Carrier
ACDV620	32	DV620 Cleat
ACDV643	1 Pair	DV662 End Caps
ACDV663	2	Shootbolt Rod Pack
ACDV670	1 Pair	DV670 End Caps
ACDV571	16	Sash Bridge Packer
ACET060	2xW@500 ctrs 3xH@500 ctrs	Self Tapping Screws
ACET067	4	Screws
ACET133	2	M5 x 50 Handle Screw
ACET160	(H-109)	Frame rebate gasket
ACET840	8x (W/4 - 104) 8 x (H - 191)	External Glazing Gasket
ACET842	8x (W/4 - 127) 8 x (H - 191)	Internal Glazing Gasket
ACSR012A	4x47mm	Woolpile For End Caps
ACVL059	1 Pair	VL72 End Caps
ACVL061	W @ 500 ctrs	Rivet for VL72
ACVS034	2x(H-109) 2x(W-90)	Rebate woolpile
WCA106	20	Chevron
+ Optional: 1 x ACDV305 Magnetic Catch		

Type 3e

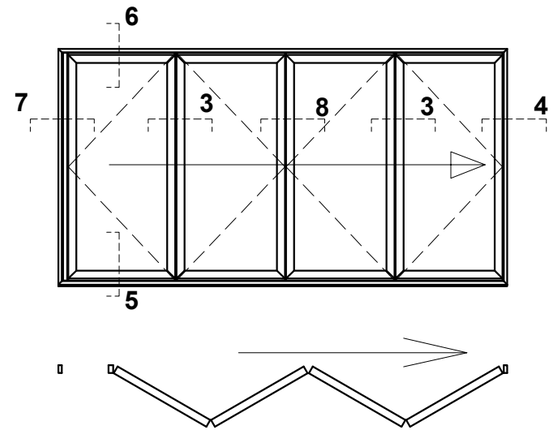

Important note
All deductions regarding heights are inclusive of DV670/DV570.
This is due to there not being a face drained option, thus a sub-cill must always be used to channel the drainage away from the frame in the approved manner.

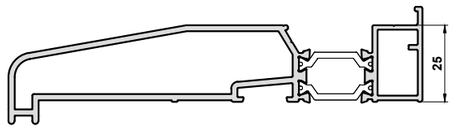

Increase all height deductions by 9mm or 18mm when using the projecting sub-cills.
9mm Deduction - ETC451, ETC452, ETC457, ETC458 & ETC479
18mm Deduction - ETC477

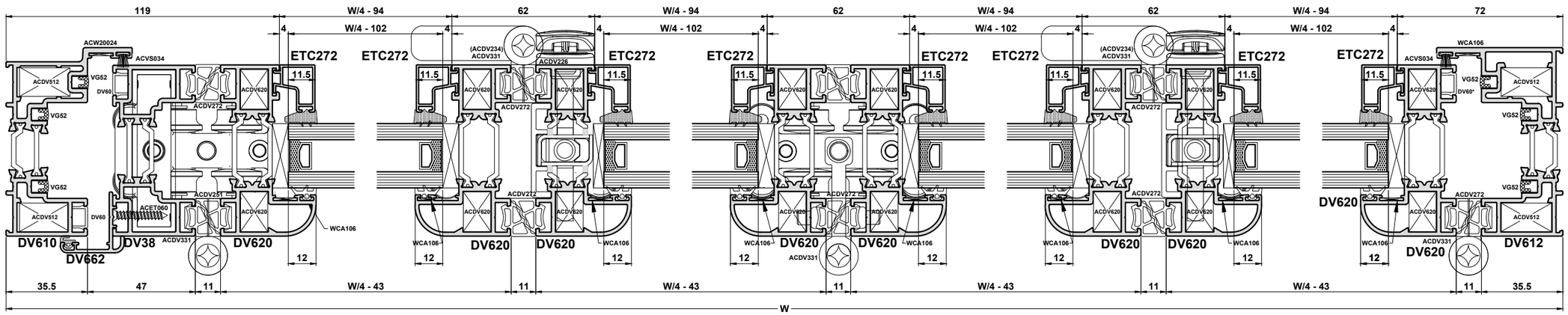

Do Not Scale From This Drawing

Cutting Information

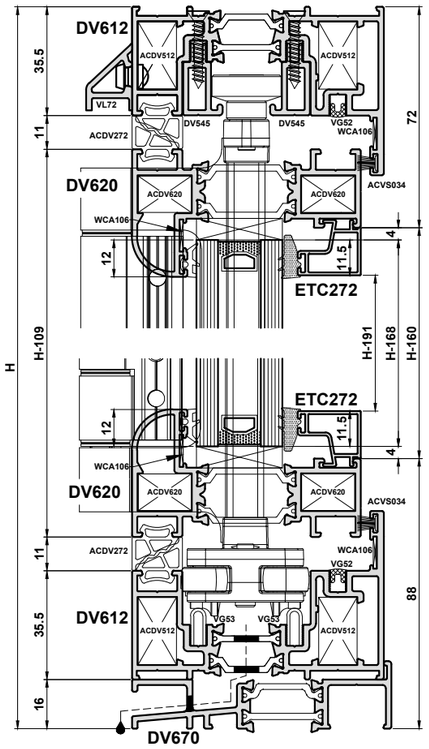

Sections

DV60*		4		H-109
DV545		1		W-36
DV545		1		150
DV545		1		W-186
DV612		2		H-16
DV612		2		W
DV620		8		H-109
DV620		8		W/4-42.5
DV640		2		H-109
DV645		2		H-109
DV662		2		H-109
DV670		1		W
PCX44		2		H-109
VG52		2		H-70
VG52		4		H-87
VG52		2		W-71
VG53		2		W-36
VL72		1		W-10
Bead		8		H-191
Bead		8		W/4-94

*Note: DV60 cover profile is optional.

Glass	
4 x	W/4 - 102
	H - 168

ACDV226	1	Shootbolt Operating Handle
ACDV234	1	'D' Handle Hinge
ACDV241	27	Lock & Keep Fixing Plate
ACDV251	2 Pairs	Lever/Lever Handle
ACDV258	2	Cylinder
ACDV270	9	Keep Fixing Plate
ACDV272	(Sash W - 78) (Sash H - 78)	Sealing Gasket
ACDV272	Cut between hinges.(Sash)	Sealing Gasket
ACDV272	2 x Frame W - 36	Sealing Gasket
ACDV272	Cut between hinges.(Frame)	Sealing Gasket
ACDV275	4	Gasket Corner Moulds
ACDV331	13	Intermediate Hinges
ACDV375	4	Outer Frame Gasket Corner Moulds
ACDV512	8	DV612 Cleat
ACDV566	1	Bottom roller hinge
ACDV567	1	Top Guide hinge
ACDV571	16	Sash Bridge Packer
ACDV576/577	1	Lock/Full Height Keep
ACDV586	1	Secondary lock
ACDV620	32	DV620 Cleat
ACDV640	1 Pair	DV662 End Caps (Primary)
ACDV642	1 Pair	DV662 End Caps (Secondary)
ACDV663	1	Shootbolt Kit
ACDV266	18	45mm Lock & Keep Fixing Screw
ACDV670	1 Pair	DV670 End Caps
ACDV737	1	Bottom Shoot Bolt
ACDV738	1	Top Shoot Bolt
ACET060	2xW@500 ctrs 3xH@500 ctrs	Self Tapping Screws
ACET067	4	Screws
ACET133	4	M5 x 50 Handle Screw
ACET160	2x(H-109)	Frame rebate gasket
ACET840	8x (W/4 - 102) 8 x (H - 191)	External Glazing Gasket
ACET842	8x (W/4 - 126) 8 x (H - 191)	Internal Glazing Gasket
ACVL059	1 Pair	VL72 End Caps
ACVL061	W @ 500 ctrs	Rivet for VL72
ACVS034	2x(H-109) 2x(W-90)	Rebate woolpile
WCA106	20	Chevron
+ Optional: 1 x ACDV305 Magnetic Catch		

Type 4e

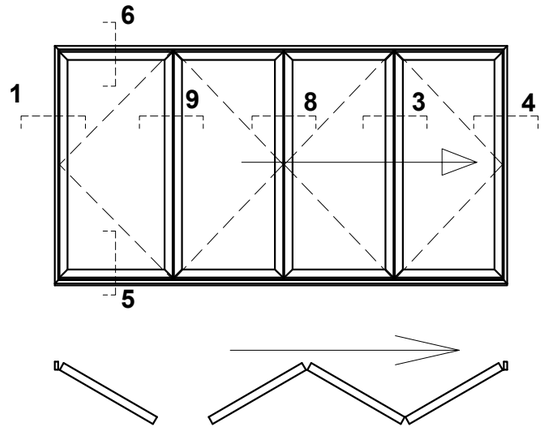

Important note
All deductions regarding heights are inclusive of DV670/DV570.
This is due to there not being a face drained option, thus a sub-cill must always be used to channel the drainage away from the frame in the approved manner.

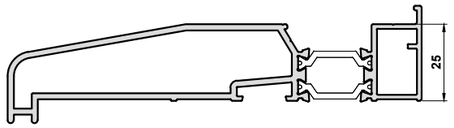

Increase all height deductions by 9mm or 18mm when using the projecting sub-cills.
9mm Deduction - ETC451, ETC452, ETC457, ETC458 & ETC479
18mm Deduction - ETC477

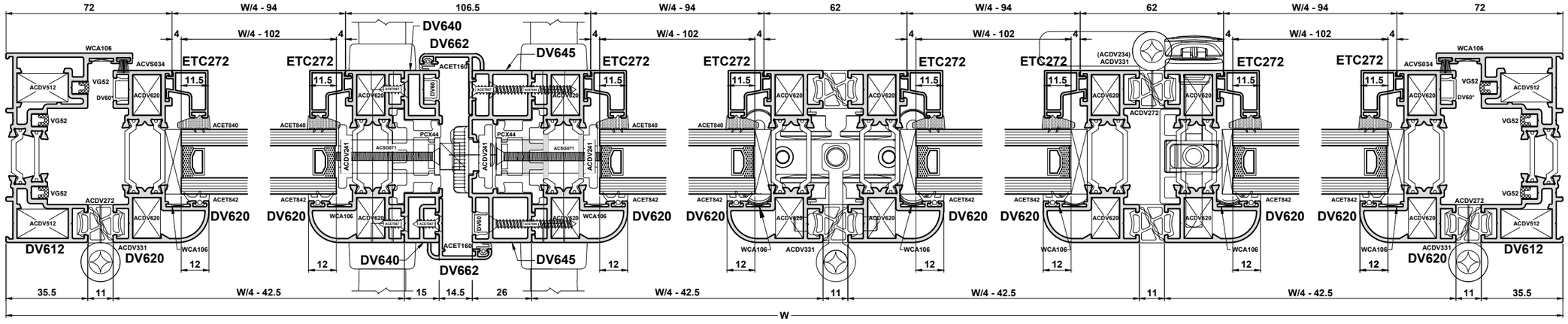

Do Not Scale From This Drawing

Cutting Information

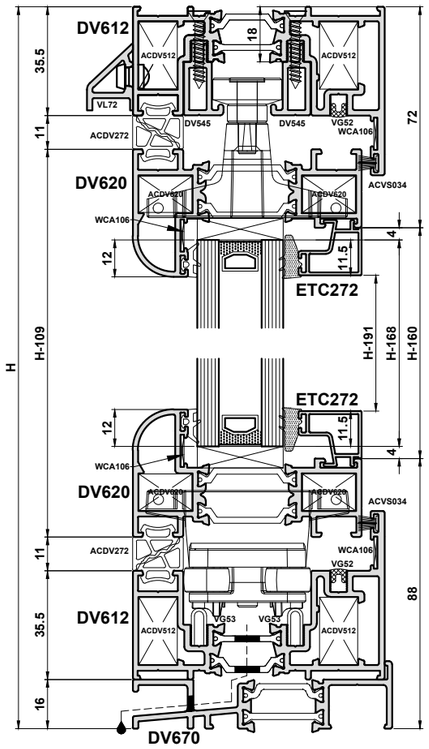

Sections

DV38		2		H-119
DV60*		4		H-109
DV545		1		W-36
DV545		1		150
DV545		1		W-186
DV612		2		H
DV612		2		W
DV620		8		H-109
DV620		8		W/4-55
DV662		2		H-109
DV670		1		W
VG52		2		H-70
VG52		4		H-87
VG52		2		W-71
VG53		2		W-36
VL72		1		W-10
Bead		8		H-191
Bead		8		W/4-106

*Note: DV60 cover profile is optional.

Glass	
4 x	W/4 - 114
	H - 168

ACDV226	2	Shootbolt Handle
ACDV234	2	'D' Handle hinge
ACDV272	(Sash W - 78) (Sash H - 78)	Sealing Gasket
ACDV272	Cut between hinges.(Sash)	Sealing Gasket
ACDV272	2 x Frame W - 36	Sealing Gasket
ACDV272	Cut between hinges.(Frame)	Sealing Gasket
ACDV275	4	Gasket Corner Moulds
ACDV331	22	Intermediate Hinges
ACDV375	4	Outer Frame Gasket Corner Moulds
ACDV512	8	DV612 Cleat
ACDV571	16	Sash Bridge Packer
ACDV580	2	Bottom mullion roller
ACDV581	2	Top Guide
ACDV590	2	Isolator and Woolpile Carrier
ACDV620	32	DV620 Cleat
ACDV643	2 Pairs	DV662 End Caps (Primary/Secondary)
ACDV663	2	Shootbolt Rod Pack
ACDV670	1 Pair	DV670 End Caps
ACET060	2xW@500 ctrs 3xH@500 ctrs	Self Tapping Screws
ACET067	4	Screws
ACET133	2	M5 x 50 Handle Screw
ACET160	4x(H-109) 2x(W-90)	Frame rebate gasket
ACET840	8x (W/4 - 114) 8 x (H - 191)	External Glazing Gasket
ACET842	8x (W/4 - 137) 8 x (H - 191)	Internal Glazing Gasket
ACSR012A	8x47mm	Woolpile For End Caps
ACVL059	1	VL72 End Caps
ACVL061	W @ 500 ctrs	Rivet for VL72
ACVS034	2x(H-109) 2x(W-90)	Rebate woolpile
WCA106	20	Chevron
+ Optional: 1 x ACDV305 Magnetic Catch		

Type 5e

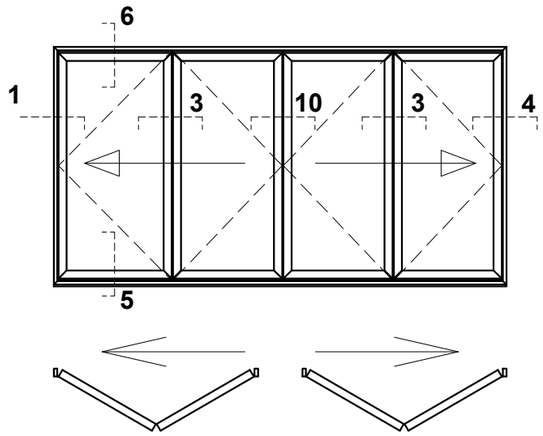

Important note
All deductions regarding heights are inclusive of DV670/DV570.
This is due to there not being a face drained option, thus a sub-cill must always be used to channel the drainage away from the frame in the approved manner.

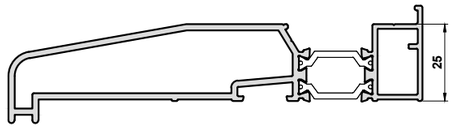

Increase all height deductions by 9mm or 18mm when using the projecting sub-cills.
9mm Deduction - ETC451, ETC452, ETC457, ETC458 & ETC479
18mm Deduction - ETC477

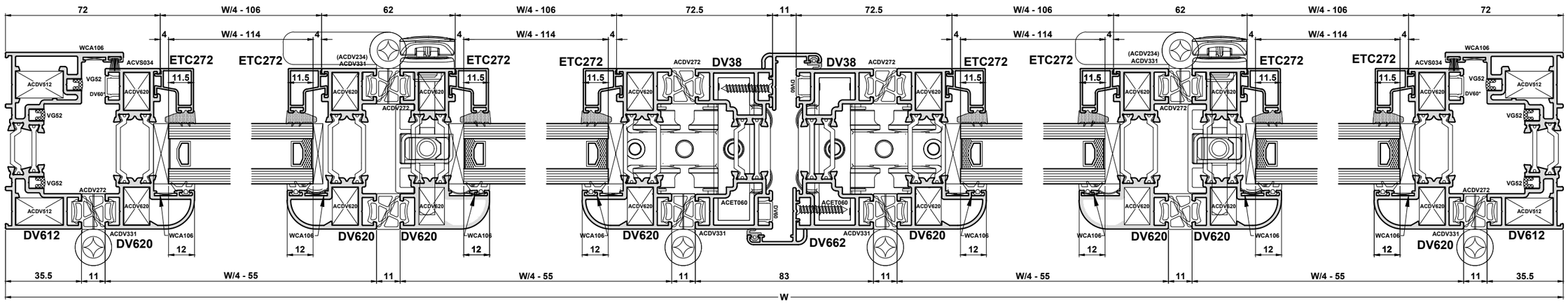

Do Not Scale From This Drawing

Cutting Information

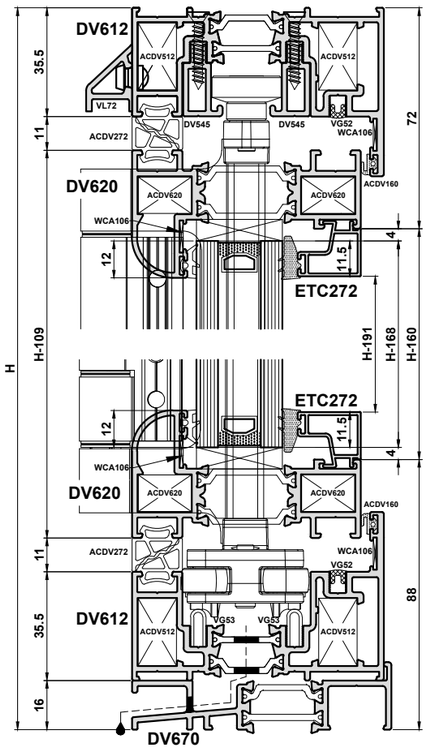

Sections

DV60*		3		H-109
DV545		1		W-36
DV545		1		150
DV545		1		W-186
DV545		2		H - 68
DV612		2		H-16
DV612		2		W
DV620		10		H-109
DV620		10		W/5-31
DV640		2		H-109
DV662		1		H-109
DV670		1		W
PCX44		1		H-109
VG52		2		H-70
VG52		2		H-87
VG52		2		W-71
VG53		2		W-36
VL72		1		W-10
Bead		10		H-191
Bead		10		W/5-82

*Note: DV60 cover profile is optional.

Glass	
5 x	W/5 - 90
	H - 168

ACDV226	2	Shootbolt Handle
ACDV234	2	'D' Handle
ACDV241	18	Lock & Keep Fixing Plate
ACDV251	1 Pair	Lever/Lever Handle
ACDV258	1	Cylinder
ACDV266	18	45mm Lock & Keep Fixing Screw
ACDV272	(Sash W - 78) (Sash H - 78)	Sealing Gasket
ACDV272	Cut between hinges.(Sash)	Gasket Corner Moulds
ACDV272	2 x Frame W - 36	Sealing Gasket
ACDV272	Cut between hinges.(Frame)	Sealing Gasket
ACDV275	5	Sealing Gasket
ACDV331	14	Intermediate Hinges
ACDV375	4	Outer Frame Gasket Corner Moulds
ACDV512	8	DV612 Cleat
ACDV566	2	Bottom Roller Hinge
ACDV567	2	Top Guide Hinge
ACDV571	20	Sash Bridge Packer
ACDV576/577	1	Lock/Full Height Keep
ACDV620	40	DV620 Cleat
ACDV640	1 Pair	DV662 End Caps
ACDV663	2	Shootbolt Rod Pack
ACDV670	1 Pair	DV670 End Caps
ACET060	2xW@500 ctrs 3xH@500 ctrs	Self Tapping Screws
ACET067	4	Screws
ACET160	3x(H-109) 2x(W-90)	Frame rebate gasket
ACET133	2	M5 x 50 Handle Screw
ACET840	10 x (W/5 - 90) 10 x (H - 191)	External Glazing Gasket
ACET842	10 x (W/5 - 113) 10 x (H - 191)	Internal Glazing Gasket
ACVL059	1 Pair	VL72 End Caps
ACVL061	W @ 500 ctrs	Rivet for VL72
WCA106	24	Chevron
+ Optional: 1 x ACDV305 Magnetic Catch		

Type 6e

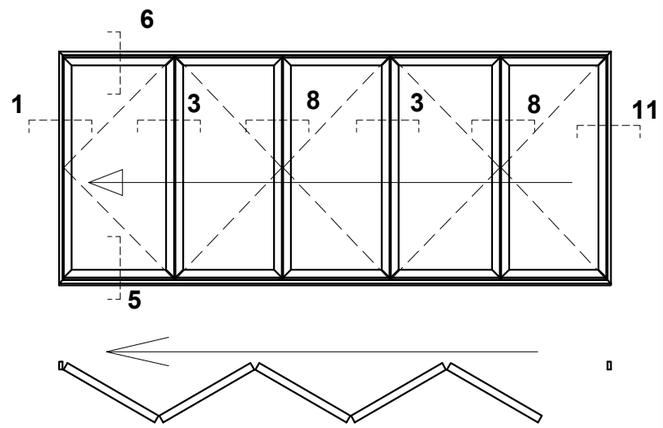

Important note
All deductions regarding heights are inclusive of DV670/DV570.
This is due to there not being a face drained option, thus a sub-cill must always be used to channel the drainage away from the frame in the approved manner.

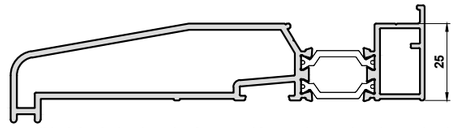

Increase all height deductions by 9mm or 18mm when using the projecting sub-cills.
9mm Deduction - ETC451, ETC452, ETC457, ETC458 & ETC479
18mm Deduction - ETC477

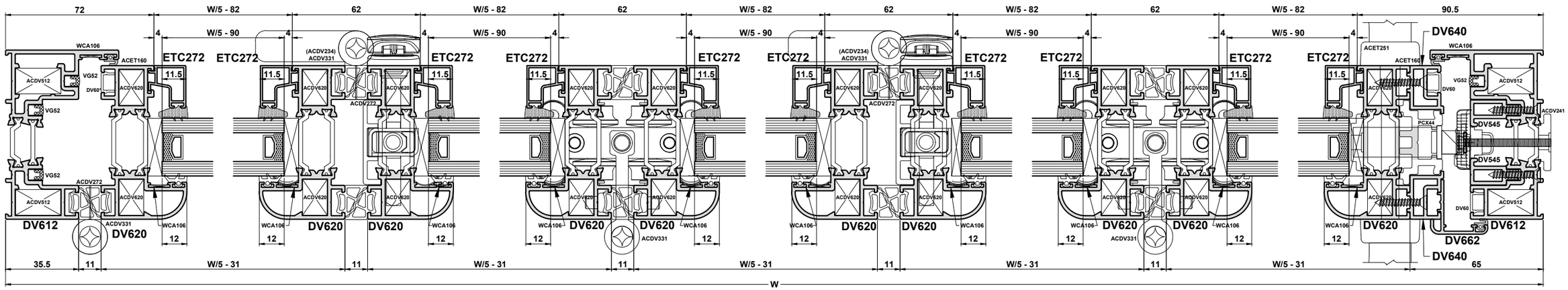

Do Not Scale From This Drawing

Cutting Information

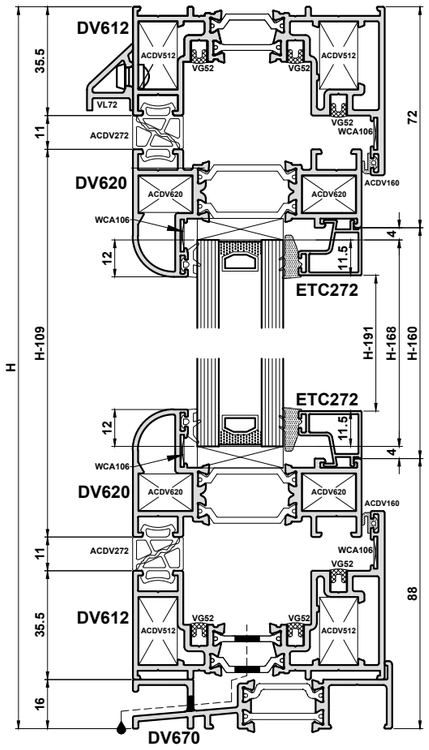

Sections

DV60*		3		H-109
DV545		2		H - 68
DV612		2		H-16
DV612		2		W
DV620		2		H-109
DV620		2		W-111.5
DV640		2		H-109
DV662		1		H-109
DV670		1		W
PCX44		1		H-109
VG52		2		H-70
VG52		2		H-87
VG52		2		W-71
VG52		4		W-36
VL72		1		W-10
Bead		2		H-191
Bead		2		W -162.5

*Note: DV60 cover profile is optional.

Glass	
1 x	W - 170.5
	H - 168

ACDV241	18	Lock & Keep Fixing Plate
ACDV251	1 Pair	Lever/Lever Handle
ACDV258	1	Cylinder
ACDV266	18	45mm Lock & Keep Fixing Screw
ACDV272	(Sash W - 78) (Sash H - 78)	Sealing Gasket
ACDV272	Cut between hinges.(Sash)	Sealing Gasket
ACDV272	2 x Frame W - 36	Sealing Gasket
ACDV272	Cut between hinges.(Frame)	Sealing Gasket
ACDV275	4	Gasket Corner Moulds
ACDV331	4	Intermediate Hinges
ACDV375	2	Outer Frame Gasket Corner Moulds
ACDV512	8	DV612 Cleat
ACDV571	4	Sash Bridge Packer
ACDV620	8	DV620 Cleat
ACDV640	1 Pair	DV662 End Caps
ACDV670	1 Pair	DV670 End Caps
ACDV576/577	1	Lock/Full Height Keep
ACET060	2xW@500 ctrs 3xH@500 ctrs	Self Tapping Screws
ACET067	4	Screws
ACET133	2	M5 x 50 Handle Screw
ACET160	3x(H-109) 2x(W-90)	Frame rebate gasket
ACET840	2 x (W - 170) 2 x (H - 191)	External Glazing Gasket
ACET842	2 x (W - 201) 2 x (H - 191)	Internal Glazing Gasket
ACSG071	11	M4 x 40mm Machine Screw
ACVL059	1	VL72 End Caps
ACVL061	W @ 500 ctrs	Rivet for VL72
WCA106	8	Chevron

Single Door

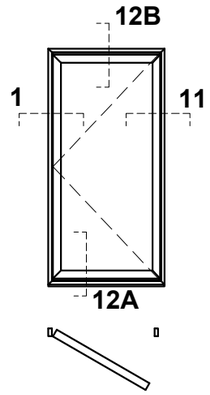

Important note
All deductions regarding heights are inclusive of DV670/DV570.
This is due to there not being a face drained option, thus a sub-cill must always be used to channel the drainage away from the frame in the approved manner.

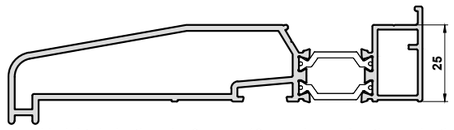

Increase all height deductions by 9mm or 18mm when using the projecting sub-cills.
9mm Deduction - ETC451, ETC452, ETC457, ETC458 & ETC479
18mm Deduction - ETC477

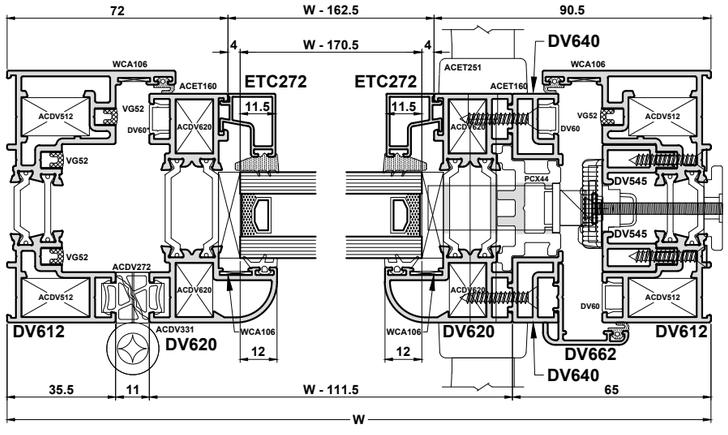

Do Not Scale From This Drawing

Cutting Information

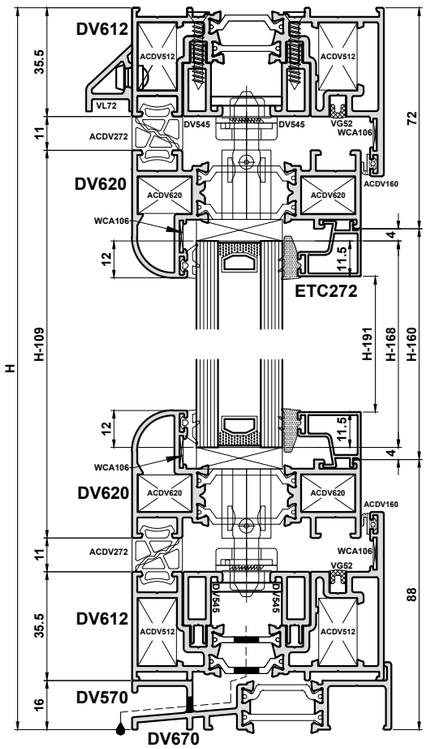

Sections

DV60*		4		H-109
DV545		4		W-36
DV612		2		H-16
DV612		2		W
DV620		8		H-109
DV620		8		W/2-74
DV640		2		H-109
DV645		2		H-109
DV662		2		H-109
DV670		1		W
PCX44		2		H-109
VG52		2		H-70
VG52		2		H-87
VG52		2		W-71
VL72		1		W-10
Bead		8		H-191
Bead		8		W/2-125

*Note: DV60 cover profile is optional.

Glass	
2 x	W/2 - 133
	H - 168

ACDV241	22	Lock & Keep Fixing Plate
ACDV251	2	Lever/Lever Handle
ACDV258	2	Cylinder
ACDV266	11	45mm Lock & Keep Fixing Screw
ACDV272	(Sash W - 78) (Sash H - 78)	Sealing Gasket
ACDV272	Cut between hinges.(Sash)	Sealing Gasket
ACDV272	2 x Frame W - 36	Sealing Gasket
ACDV272	Cut between hinges.(Frame)	Sealing Gasket
ACDV275	2	Gasket Corner Moulds
ACDV331	8	Intermediate Hinges
ACDV375	4	Outer Frame Gasket Corner Moulds
ACDV512	8	DV612 Cleat
ACDV586	1	Secondary Lock Kit
ACDV571	8	Sash Bridge Packer
ACDV620	16	DV620 Cleat
ACDV640	1 Pair	Primary Door End Caps
ACDV642	1 Pair	Secondary Door End Caps
ACDV670	1 Pair	DV670 End Caps
ACDV576/577	1	Lock/Full Height Keep
ACDV737	1	Bottom Shoot Bolt
ACDV738	1	Top Shoot Bolt
ACET060	2xW@500 ctrs 3xH@500 ctrs	Self Tapping Screws
ACET067	4	Screws
ACET133	2	M5 x 50 Handle Screw
ACET160	4 x (H-109) 2 x (W-90)	Frame rebate gasket
ACET840	4 x (W/2 - 128) 4 x (H - 191)	External Glazing Gasket
ACET842	4 x (W/2 - 151) 4 x (H - 191)	Internal Glazing Gasket
ACSG071	11	40mm Machine Screw
ACVL059	1 Pair	VL72 End Caps
ACVL061	W @ 500 ctrs	Rivet for VL72
WCA106	12	Chevron

Double Swing Door

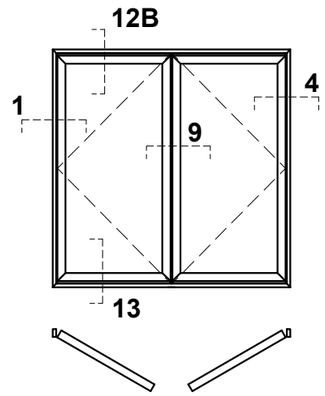

Important note
All deductions regarding heights are inclusive of DV670/DV570.
This is due to there not being a face drained option, thus a sub-cill must always be used to channel the drainage away from the frame in the approved manner.

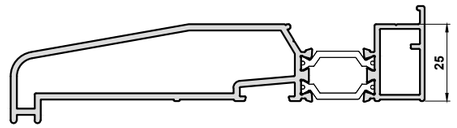

Increase all height deductions by 9mm or 18mm when using the projecting sub-cills.
9mm Deduction - ETC451, ETC452, ETC457, ETC458 & ETC479
18mm Deduction - ETC477

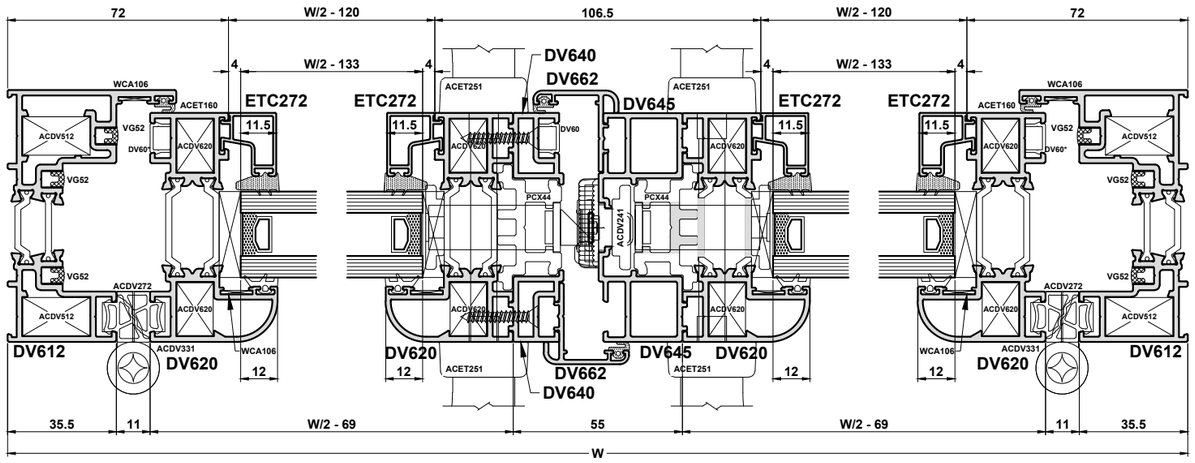

Do Not Scale From This Drawing

Cutting Information

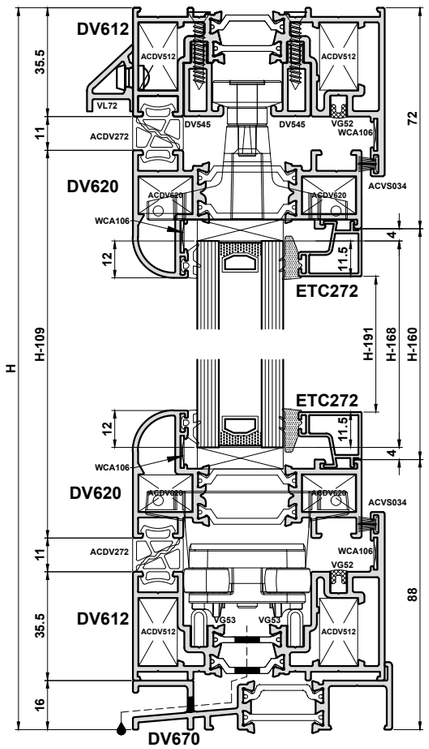

Sections

DV38		1		H-119
DV60*		3		H-109
DV545		1		W-36
DV545		1		150
DV545		1		W-186
DV612		2		H-16
DV612		2		W
DV620		8		H-109
DV620		8		W/2-75.5
DV662		2		H-109
DV670		1		W
VG52		2		H-70
VG52		4		H-87
VG52		2		W-71
VG53		2		W-36
VL72		1		W-10
Bead		8		H-191
Bead		8		W/2-127

*Note: DV60 cover profile is optional.

Glass	
2 x	W/2 - 135
	H - 168

ACDV226	1	Shootbolt Handle
ACDV234	1	'D' Handle
ACDV272	(Sash W - 78) (Sash H - 78)	Sealing Gasket
ACDV272	Cut between hinges.(Sash)	Sealing Gasket
ACDV272	2 x Frame W - 36	Sealing Gasket
ACDV272	Cut between hinges.(Frame)	Sealing Gasket
ACDV275	2	Gasket Corner Moulds
ACDV331	11	Intermediate Hinges
ACDV375	4	Outer Frame Gasket Corner Moulds
ACDV512	8	DV612 Cleat
ACDV571	8	Sash Bridge Packer
ACDV580	1	Mullion Bottom Roller
ACDV581	1	Top Guide Roller
ACDV590	1	Isolator and Woolpile Carrier
ACDV620	16	DV620 Cleat
ACDV643	1 Pair	DV662 End Caps
ACDV663	1	Shootbolt Rod Pack
ACDV670	1 Pair	DV670 End Caps
ACET060	2xW@500 ctrs 3xH@500 ctrs	Self Tapping Screws
ACET067	4	Screws
ACET133	2	M5 x 50 Handle Screw
ACET160	(H-109)	Frame rebate gasket
ACET840	4x (W/2 - 142) 4x (H - 191)	External Glazing Gasket
ACET842	4x (W/2 - 135) 4x (H - 191)	Internal Glazing Gasket
ACSG071	11	M4 x 40mm Machine Screw
ACSR012A	4x47mm	Woolpile For End Caps
ACVL059	1 Pair	VL72 End Caps
ACVL061	W @ 500 ctrs	Rivet for VL72
ACVS034	2x(H-109) 2x(W-90)	Rebate woolpile
WCA106	12	Chevron
+ Optional: 1 x ACDV305 Magnetic Catch		

Double Slide & Fold Door

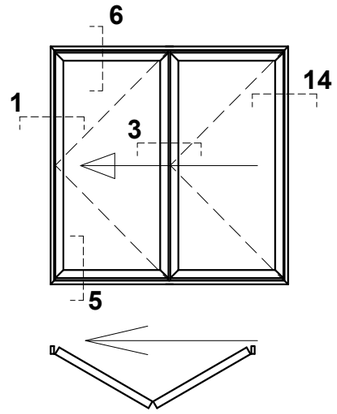

Important note
All deductions regarding heights are inclusive of DV670/DV570.
This is due to there not being a face drained option, thus a sub-cill must always be used to channel the drainage away from the frame in the approved manner.

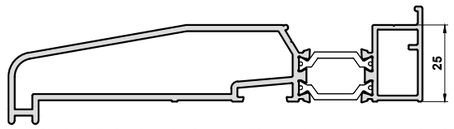

Increase all height deductions by 9mm or 18mm when using the projecting sub-cills.
9mm Deduction - ETC451, ETC452, ETC457, ETC458 & ETC479
18mm Deduction - ETC477

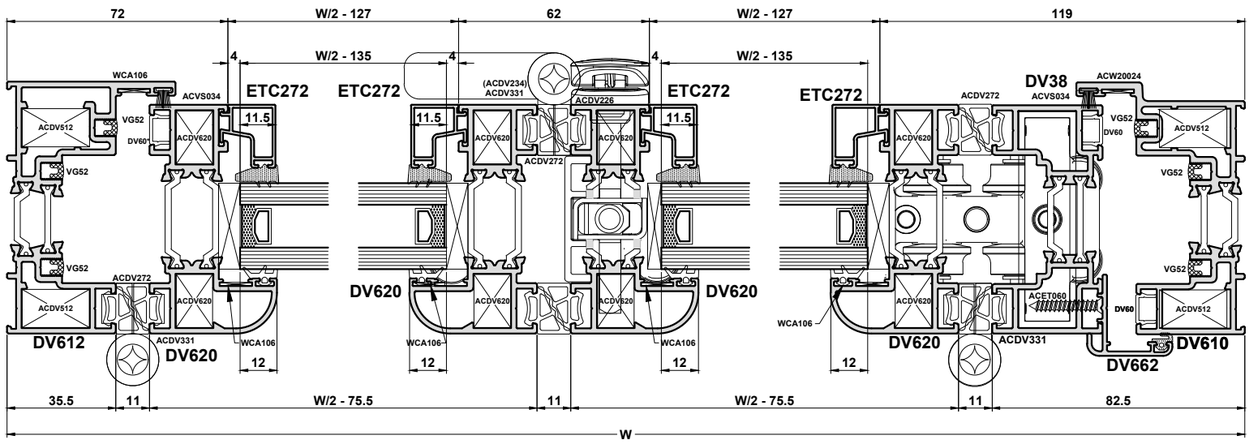

Do Not Scale From This Drawing

Cutting Information

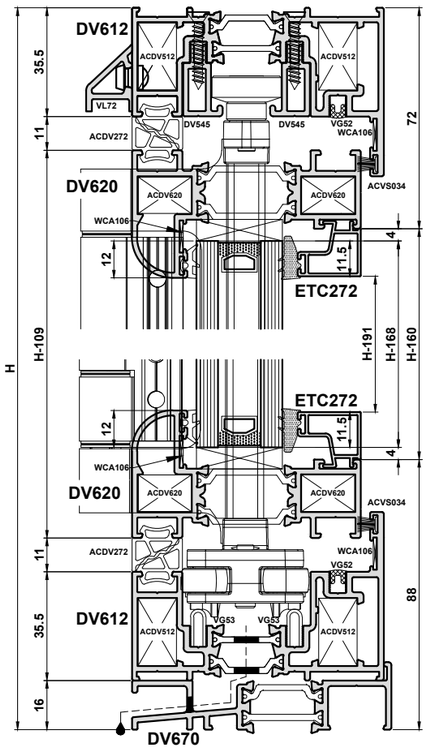

Sections

DV38		1		H-119
DV60*		4		H-109
DV545		1		W-36
DV545		1		150
DV545		1		W-186
DV612		2		H-16
DV612		2		W
DV620		10		H-109
DV620		10		W/5-40.5
DV640		2		H-109
DV662		2		H-109
DV670		1		W
PCX44		1		H-109
PCX38		1		H-109
VG52		2		H-70
VG52		4		H-87
VG52		2		W-71
VG53		2		W-36
VL72		1		W-10
Bead		10		H-191
Bead		10		W/5-91.5

*Note: DV60 cover profile is optional.

Glass	
5 x	W/5 - 100
	H - 168

ACDV226	2	Shootbolt Handle
ACDV234	2	'D' Handle
ACDV241	18	Lock & Keep Fixing Plate
ACDV251	1 Pair	Lever/Lever Handle
ACDV258	1	Cylinder
ACDV266	18	45mm Lock & Keep Fixing Screw
ACDV272	(Sash W - 78) (Sash H - 78)	Sealing Gasket
ACDV272	Cut between hinges.(Sash)	Sealing Gasket
ACDV272	2 x Frame W - 36	Sealing Gasket
ACDV272	Cut between hinges.(Frame)	Sealing Gasket
ACDV275	5	Gasket Corner Moulds
ACDV331	20	Intermediate Hinges
ACDV375	4	Outer Frame Gasket Corner Moulds
ACDV512	8	DV612 Cleat
ACDV566	1	Bottom Roller Hinge
ACDV567	1	Top Guide Hinge
ACDV571	20	Sash Bridge Packer
ACDV580	1	Mullion Bottom Roller
ACDV581	1	Mullion Top Roller
ACDV620	40	DV620 Cleat
ACDV640	1 Pair	DV662 End Caps (Primary)
ACDV643	1 Pair	DV662 End Caps (Secondary)
ACDV663	2	Shootbolt Rod Pack
ACDV670	1 Pair	DV670 End Caps
ACDV576/577	1	Lock/Full Height Keep
ACET060	2xW@500 ctrs 3xH@500 ctrs	Self Tapping Screws
ACET067	4	Screws
ACET133	2	M5 x 50 Handle Screw
ACET160	2x(H-109)	Frame rebate gasket
ACET840	10 x (W/5 - 90) 10 x (H - 191)	External Glazing Gasket
ACET842	10 x (W/5 - 113) 10 x (H - 191)	Internal Glazing Gasket
ACVL059	1 Pair	VL72 End Caps
ACVL061	W @ 500 ctrs	Rivet for VL72
ACVS034	2x(H-109) 2x(W-90)	Rebate woolpile
WCA106	24	Chevron

+ Optional: 1 x ACDV305 Magnetic Catch

3/2 Door

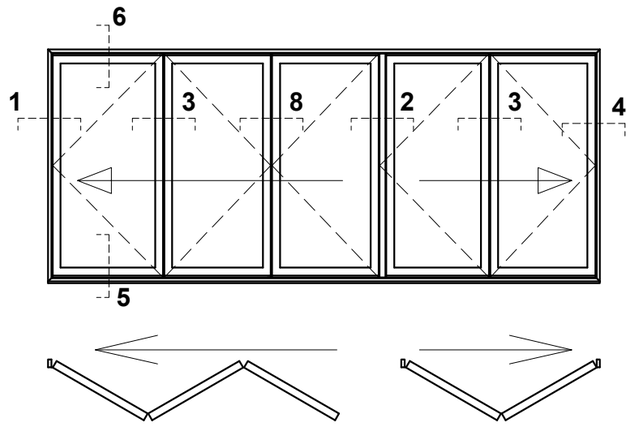

Important note
All deductions regarding heights are inclusive of DV670/DV570.
This is due to there not being a face drained option, thus a sub-cill must always be used to channel the drainage away from the frame in the approved manner.

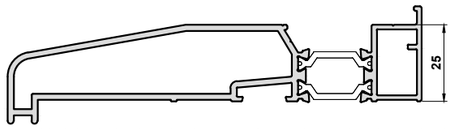

Increase all height deductions by 9mm or 18mm when using the projecting sub-cills.
9mm Deduction - ETC451, ETC452, ETC457, ETC458 & ETC479
18mm Deduction - ETC477

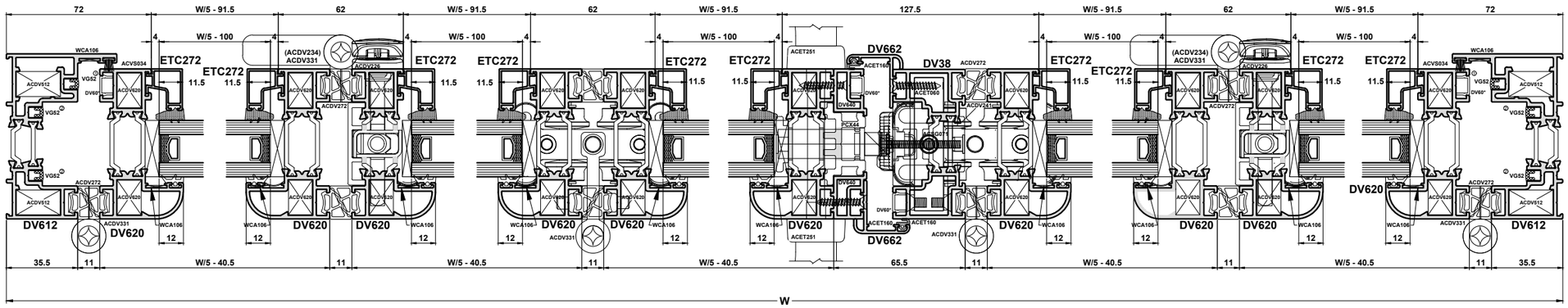

Do Not Scale From This Drawing

Cutting Information

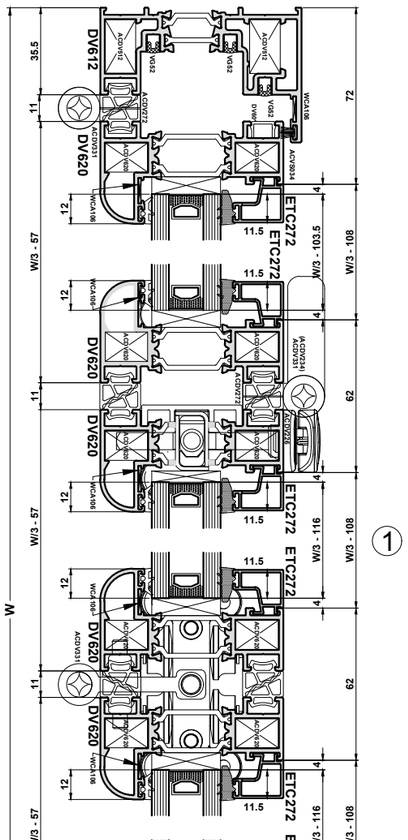

① Sections

DV60*		2		H-109
DV62		1		H-109
DV545	Ⓐ	1		W-35
DV545		1		150
DV545	Ⓑ	1		W-213
DV612		1		H
DV612	A.→ ←B.	2	A. B.	W
DV620		6		H-109
DV620		6		W/3-57
DV640		2		H-109
DV662		1		H-109
DV670		1		W
VG52		1		H-70
VG52		2		H-56
VG52	Ⓛ	1		W-100
VG53		1		W-37
VG53		1		W-69
VL72		1		W-10
Bead		6		H-191
Bead		6		W/3-108

*Note: DV60 cover profile is optional.

Glass	
3 x	W/3 - 116
	H - 168

② Sections

DV38		1		H-119
DV60*		2		H-109
DV62		1		H-109
DV545	Ⓐ	1		W-35
DV545		1		150
DV545	Ⓑ	1		W-213
DV555		1		H-109
DV612		1		H
DV612	A.→ ←B.	2	A. B.	W
DV620		8		H-109
DV620		8		W/4-50
DV670		1		W
PCX38		1		H-109
PCX44		1		H-109
VG52		2		H-70
VG52		1		H-56
VG52	Ⓛ	1		W-100
VG53	Ⓐ	1		W-43
VG53	Ⓑ	1		W-74
VL72		1		W-10
Bead		8		H-191
Bead		8		W/4-101

*Note: DV60 cover profile is optional.

Glass	
4 x	W/4 - 109
	H - 168

Note: PCX15 required for leaf heights over 2285 and for PCX44.

ACDV226	3	Shootbolt Handle
ACDV234	3	'D' Handle hinge
ACDV241	22	Lock & Keep Fixing Plate
ACDV251	1 (Pair)	Lever/Lever Handle
ACDV258	1	Cylinder
ACDV266	11	45mm Lock & Keep Fixing Screw
ACDV272	(Sash W - 78) (Sash H - 78)	Sealing Gasket
ACDV272	Cut between hinges.(Sash)	Sealing Gasket
ACDV272	4 x Frame W - 36 (Mitred)	Sealing Gasket
ACDV272	Cut between hinges.(Frame)	Sealing Gasket
ACDV275	7	Gasket Corner Moulds
ACDV331	21	Intermediate Hinges
ACDV512	8	DV612 Cleat
ACDV552N	1 Set	90° Outerframe Fixing Bracket
ACDV555	1 Pair	DV555 Corner post end caps
ACDV566	2	Bottom Roller Hinge
ACDV567	2	Top Guide Hinge
ACDV571	28	Sash Bridge Packer
ACDV580	1	Mullion Bottom Roller
ACDV581	1	Mullion Top Roller
ACDV620	56	DV620 Cleat
ACDV640	1 Pair	DV662 End Caps
ACDV663	3	Shootbolt Rod Pack
ACDV670	1 Pair	DV670 End Caps
ACDV576/577	1	Lock/Full Height Keep
ACET060	2xW@500 ctrs 3xH@500 ctrs	Self Tapping Screws
ACET067	4	Screws
ACET133	2	M5 x 50 Handle Screw
ACET160	1 x (H - 109)	Rebate Gasket for DV662
① ACET840	6 x (W/3 - 90) 6 x (H - 191)	External Glazing Gasket
② ACET840	4 x (W/3 - 90) 4 x (H - 191)	External Glazing Gasket
① ACET842	6 x (W/3 - 113) 6 x (H - 191)	Internal Glazing Gasket
② ACET842	4 x (W/3 - 113) 4 x (H - 191)	Internal Glazing Gasket
ACSG071	11	M4 x 40mm Machine Screw
ACVL059	2 Pairs	VL72 End Caps
ACVL061	W @ 500 ctrs	Rivet for VL72
ACVS034	4x(H-109) 4x(W-123) Mitred	Rebate woolpile
ACSR012A	2x 68mm	ACDV555 brush pile
ACSR011	2x(H-109)	Locking stile brush pile for DV62
WCA106	32	Chevron

If using sub-cills please order ACET440 & ACET041 cleats for 90° corner.

+ Optional: 1 x ACDV305 Magnetic Catch

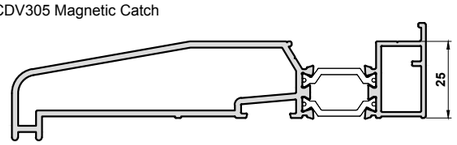

Increase all height deductions by 9mm or 18mm when using the projecting sub-cills.
9mm Deduction - ETC451, ETC452, ETC457, ETC458 & ETC479
18mm Deduction - ETC477

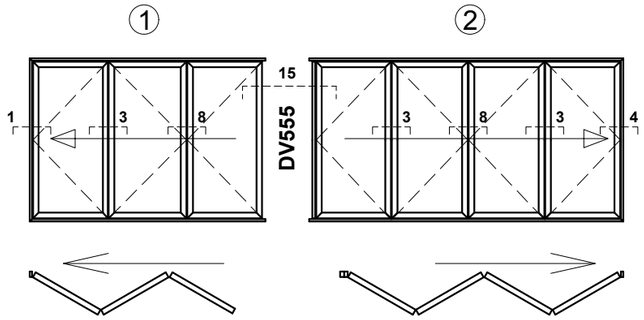

Important note
All deductions regarding heights are inclusive of DV670/DV570.
This is due to there not being a face drained option, thus a sub-cill must always be used to channel the drainage away from the frame in the approved manner.

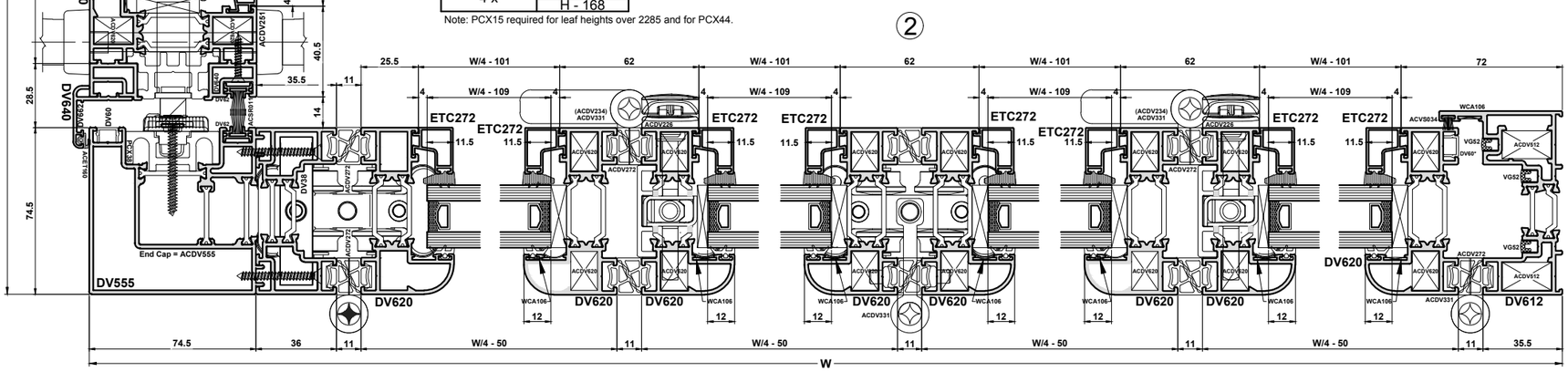

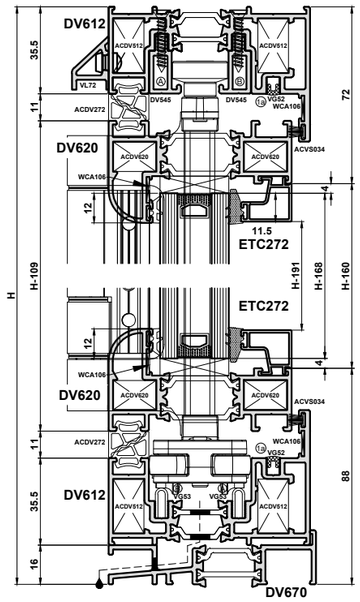

Do Not Scale From This Drawing

Cutting Information

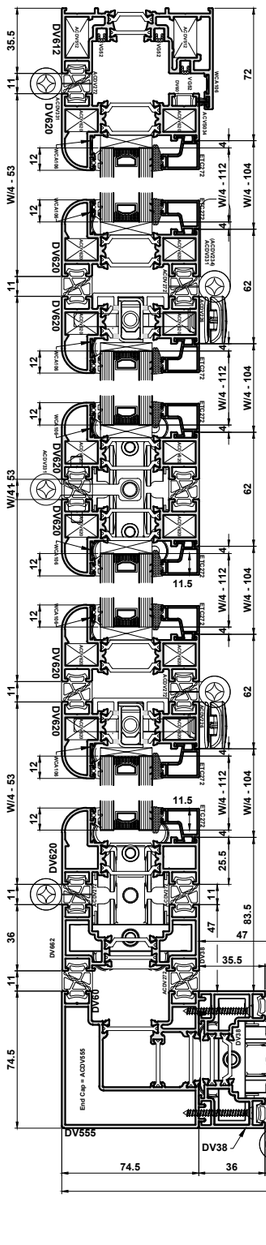

①

②

① Sections

DV38		1		H-119
DV60*		2		H-109
DV545	Ⓐ	1		W-35
DV545		1		150
DV545	Ⓑ	1		W-213
DV612		1		H
DV612	A. B.	2	A. B.	W
DV620		8		H-109
DV620		8		W/4-53
DV670		1		W
VG52		1		H-70
VG52		2		H-56
VG52	Ⓑ	1		W-100
VG53		1		W-37
VG53		1		W-69
VL72		1		W-10
Bead		6		H-191
Bead		6		W/4-104

*Note: DV60 cover profile is optional.

	Glass
4 x	W/4 - 112
	H - 168

② Sections

DV38		1		H-119
DV60*		2		H-109
DV545	Ⓐ	1		W-35
DV545		1		150
DV545	Ⓑ	1		W-213
DV555		1		H-109
DV612		1		H
DV612	A. B.	2	A. B.	W
DV620		8		H-109
DV620		8		W/4-50
DV670		1		W
VG52		2		H-70
VG52		1		H-56
VG52	Ⓑ	1		W-100
VG53	Ⓐ	1		W-43
VG53	Ⓑ	1		W-74
VL72		1		W-10
Bead		8		H-191
Bead		8		W/4-101

*Note: DV60 cover profile is optional.

	Glass
4 x	W/4 - 109
	H - 168

	ACDV226	4	Shootbolt Handle
	ACDV234	4	'D' Handle Hinge
	ACDV272	(Sash W - 78) (Sash H - 78)	Sealing Gasket
	ACDV272	Cut between hinges.(Sash)	Sealing Gasket
	ACDV272	4 x Frame W - 36 (Mitred)	Sealing Gasket
	ACDV272	Cut between hinges.(Frame)	Sealing Gasket
	ACDV275	8	Gasket Corner Moulds
	ACDV331	23	Intermediate Hinges
	ACDV512	8	DV612 Cleat
	ACDV552N	1 Set	90° Outerframe Fixing Bracket
	ACDV555	2 (Handed)	DV555 Corner post end caps
	ACDV566	2	Bottom Roller Hinge
	ACDV567	2	Top Guide Hinge
	ACDV571	32	Sash Bridge Packer
	ACDV580	2	Mullion Bottom Roller
	ACDV581	2	Mullion Top Roller
	ACDV620	64	DV620 Cleat
	ACDV663	4	Shootbolt Rod Pack
	ACDV670	1 Pair	DV670 End Caps
	ACET060	2xW@500 ctrs 3xH@500 ctrs	Self Tapping Screws
	ACET067	4	Screws
	ACET133	8	M5 x 50 Handle Screw
①	ACET840	8 x (W/4 - 112) 8 x (H - 191)	External Glazing Gasket
②	ACET840	8 x (W/4 - 109) 8 x (H - 191)	External Glazing Gasket
①	ACET842	8 x (W/4 - 135) 8 x (H - 191)	Internal Glazing Gasket
②	ACET842	8 x (W/4 - 124) 8 x (H - 191)	Internal Glazing Gasket
	ACSG071	11	M4 x 40mm Machine Screw
	ACVS034	2x(H-109) 4x(W-123) Mitred	Rebate woolpile
	ACVL059	2 Pairs	VL72 End Caps
	ACVL061	W @ 500 ctrs	Rivet for VL72
	ACSR012	2x 68mm	ACDV555 brush pile
	WCA106	32	Chevron

If using sub-cills please order ACET440 & ACET041 cleats for 90° corner.
+ Optional: 1 x ACDV305 Magnetic Catch

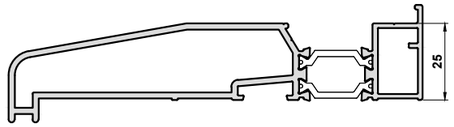

Increase all height deductions by 9mm or 18mm when using the projecting sub-cills.
9mm Deduction - ETC451, ETC452, ETC457, ETC458 & ETC479
18mm Deduction - ETC477

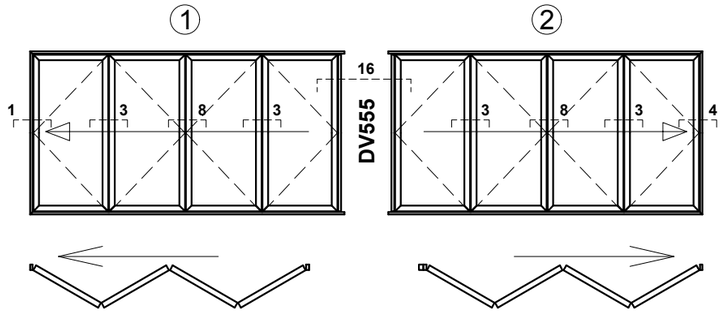

Important note
All deductions regarding heights are inclusive of DV670/DV570.
This is due to there not being a face drained option, thus a sub-cill must always be used to channel the drainage away from the frame in the approved manner.

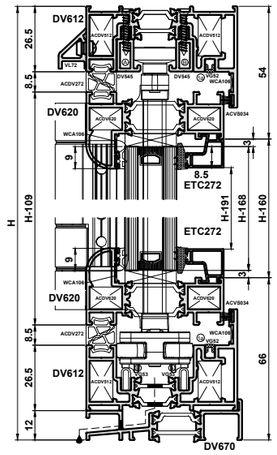

Do Not Scale From This Drawing

Cutting Information

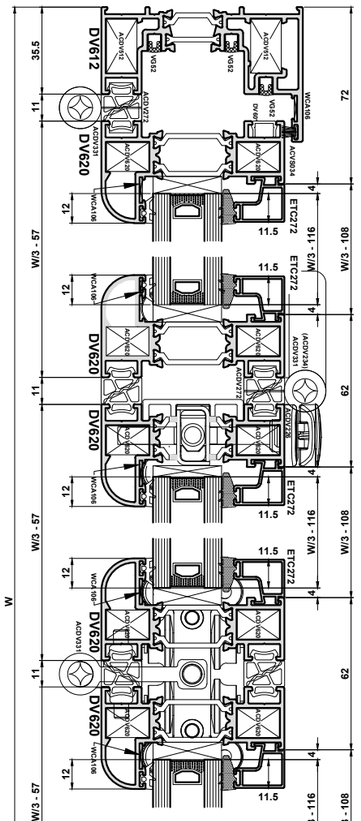

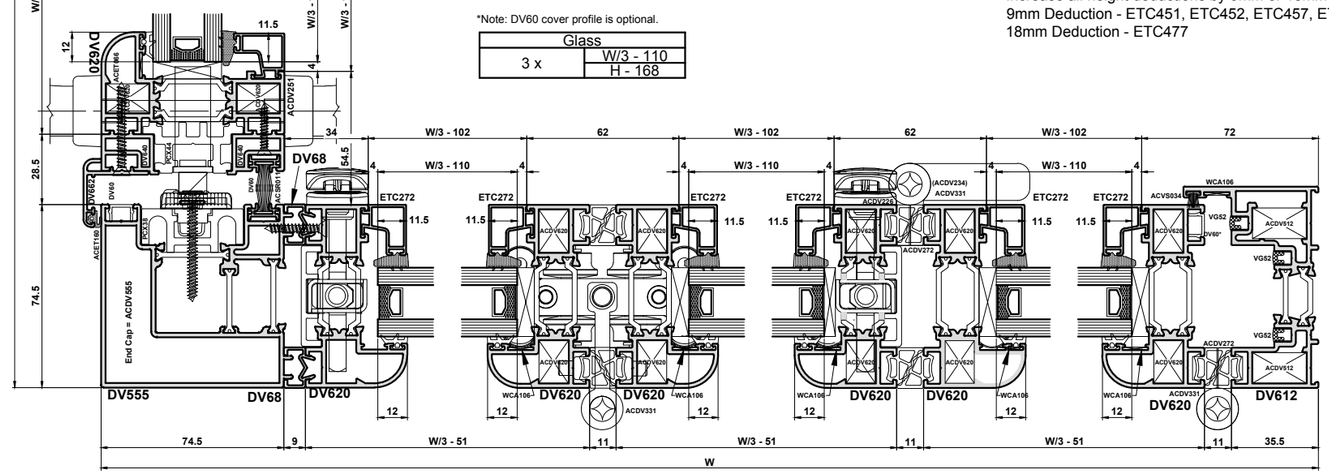

① **Sections**

DV60*		2		H-109
DV62		1		H-109
DV545	Ⓐ	1		W-35
DV545		1		150
DV545	Ⓑ	1		W-213
DV612		1		H
DV612	A.→ ←B.	2	A. B.	W
DV620		6		H-109
DV620		6		W/3-57
DV640		2		H-109
DV662		1		H-109
DV670		1		W
VG52		1		H-70
VG52		2		H-56
VG52	Ⓑ	1		W-100
VG53		1		W-37
VG53		1		W-69
VL72		1		W-10
Bead		6		H-191
Bead		6		W/3-108

*Note: DV60 cover profile is optional.

Glass	
3 x	W/3 - 116
	H - 168

② **Sections**

DV60*		2		H-109
DV62		1		H-109
DV545	Ⓐ	1		W-35
DV545		1		150
DV545	Ⓑ	1		W-213
DV555		1		H-109
DV612		1		H
DV612	A.→ ←B.	2	A. B.	W
DV620		6		H-109
DV620		6		W/3-51
DV670		1		W
PCX38		1		H-109
PCX44		1		H-109
VG52		2		H-70
VG52		1		H-56
VG52	Ⓑ	1		W-100
VG53	Ⓐ	1		W-43
VG53	Ⓑ	1		W-74
VL72		1		W-10
Bead		6		H-191
Bead		6		W/3-102

*Note: DV60 cover profile is optional.

Glass	
3 x	W/3 - 110
	H - 168

	ACDV226	3	Shootbolt Handle
	ACDV234	2	'D' Handle Hinge
	ACDV241	22	Lock & Keep Fixing Plate
	ACDV251	1	Lever/Lever Handle
	ACDV258	1	Cylinder
	ACDV266	11	45mm Lock & Keep Fixing Screw
	ACDV272	(Sash W - 78) (Sash H - 78)	Sealing Gasket
	ACDV272	Cut between hinges.(Sash)	Sealing Gasket
	ACDV272	4 x Frame W - 36 (Mitred)	Sealing Gasket
	ACDV272	Cut between hinges.(Frame)	Sealing Gasket
	ACDV275	6	Gasket Corner Moulds
	ACDV331	18	Intermediate Hinges
	ACDV512	8	DV512 Cleat
	ACDV682	1 Set	90° Outerframe Fixing Bracket
	ACDV555	2 (Handed)	DV555 Corner post end caps
	ACDV566	2	Bottom Roller Hinge
	ACDV567	2	Top Guide Hinge
	ACDV571	24	Sash Bridge Packer
	ACDV620	48	DV620 Cleat
	ACDV640	1 Pair	DV662 End Caps
	ACDV663	3	Shootbolt Rod Pack
	ACDV670	1 Pair	DV670 End Caps
	ACDV722	1	Lock/Full Height Keep
	ACET060	2xW@500 ctrs 3xH@500 ctrs	Self Tapping Screws
	ACET067	4	Screws
	ACET133	2	M5 x 50 Handle Screw
①	ACET840	6 x (W/3 - 108) 6 x (H - 191)	External Glazing Gasket
②	ACET840	6 x (W/3 - 102) 6 x (H - 191)	External Glazing Gasket
①	ACET842	6 x (W/3 - 139) 6 x (H - 191)	Internal Glazing Gasket
②	ACET842	6 x (W/3 - 133) 6 x (H - 191)	Internal Glazing Gasket
	ACSG071	11	M4 x 40mm Machine Screw
	ACVL059	2 Pairs	VL72 End Caps
	ACVL061	W @ 500 ctrs	Rivet for VL72
	ACVS034	3x(H-109) 4x(W-123) Mitred	Rebate woolpile
	ACSR012	2x 68mm	ACDV555 brush pile
	ACSR011	2x(H-109)	Locking stile brush pile for DV62
	WCA106	24	Chevron

If using sub-cills please order ACET440 & ACET041 cleats for 90° corner.
+ Optional: 1 x ACDV305 Magnetic Catch

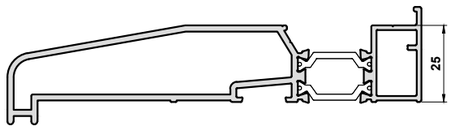

Increase all height deductions by 9mm or 18mm when using the projecting sub-cills.
9mm Deduction - ETC451, ETC452, ETC457, ETC458 & ETC479
18mm Deduction - ETC477

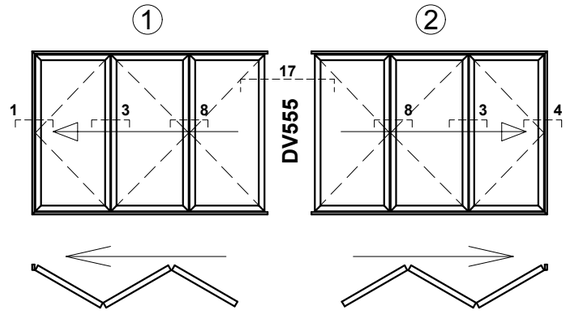

Important note
All deductions regarding heights are inclusive of DV670/DV570.
This is due to there not being a face drained option, thus a sub-cill must always be used to channel the drainage away from the frame in the approved manner.

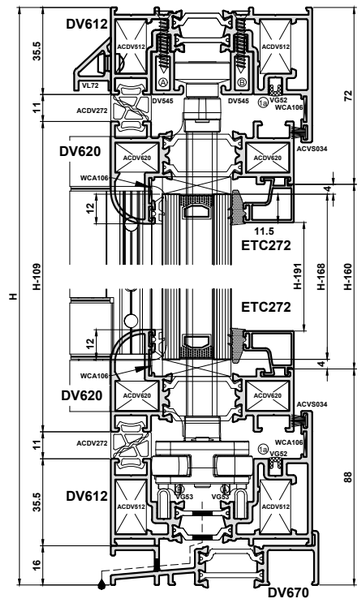

Do Not Scale From This Drawing

Do Not Scale From This Drawing

Section F

Sawing Tables
Open In

Section F

Cutting Information

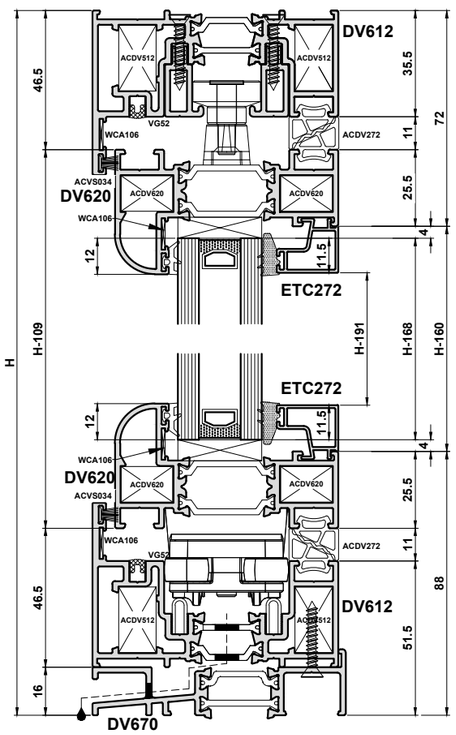

Sections

DV38		1		H-119
DV60*		4		H-109
DV545		1		W-36
DV545		1		150
DV545		1		W-186
DV612		2		H-16
DV612		2		W
DV620		6		H-109
DV620		6		W/3-60
DV640		2		H-109
DV662		2		H-109
DV670		1		W
PCX38		1		H-135
PCX44		1		H-109
VG52		2		H-70
VG52		4		H-87
VG52		2		W-71
VG53		2		W-36
Bead		6		H-190
Bead		6		W/3-111

*Note: DV60 cover profile is optional.

Glass	
3 x	W/3 - 119
	H - 168

ACDV226	1	Shootbolt Handle
ACDV241	18	Lock & Keep Fixing Plate
ACDV251	1	Lever/Lever Handle
ACDV258	1	Cylinder
ACDV266	18	45mm Lock & Keep Fixing Screw
ACDV272	(Sash W - 78) (Sash H - 78)	Sealing Gasket
ACDV272	Cut between hinges.(Sash)	Sealing Gasket
ACDV272	Cut between hinges.(Frame)	Sealing Gasket
ACDV272	2x(H - 109) 2x(W - 90)	Sealing Gasket
ACDV274	1	'D' Handle Hinge
ACDV275	3	Gasket Corner Moulds
ACDV331	16	Intermediate Hinges
ACDV375	4	Outer Frame Gasket Corner Moulds
ACDV512	8	DV612 Cleat
ACDV571	12	Bridge Packer
ACDV577	1	Lock/Full Height Keep
ACDV580	1	Mullion Bottom Roller
ACDV581	1	Mullion Top Guide Roller
ACDV590	1	Isolator and Woolpile Carrier
ACDV620	24	DV620 Cleat
ACDV640	1 Pairs	Primary Door End Caps
ACDV643	1 Pair	DV662 End Caps
ACDV663	1	Shootbolt Rod Pack
ACDV670	1 Pair	DV670 End Caps
ACET060	2xW@500 ctrs 3xH@500 ctrs	Self Tapping Screws
ACET067	4	Screws
ACET133	2	M5 x 50 Handle Screw
ACET160	2x(H-109)	Frame Rebate Gasket
ACET840	6x (W/3 - 119) 6 x (H - 191)	External Glazing Gasket
ACET842	6x (W/3 - 142) 6 x (H - 191)	Internal Glazing Gasket
ACSR012A	4x47mm	Woolpile For End Caps
ACVS034	2x(H-109) 2x(W-90)	Rebate Woolpile
WCA106	16	Chevron
+ Optional: 1 x ACDV305 Magnetic Catch		

Type 1i

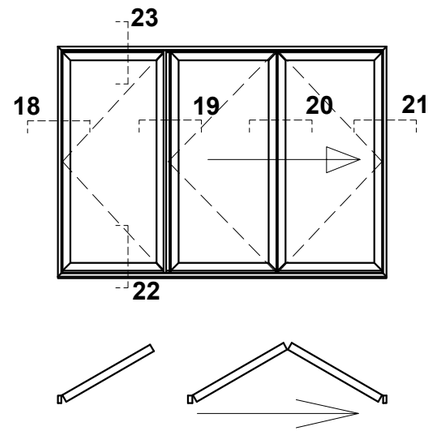

Important note
All deductions regarding heights are inclusive of DV670/DV570.
This is due to there not being a face drained option, thus a sub-cill must always be used to channel the drainage away from the frame in the approved manner.

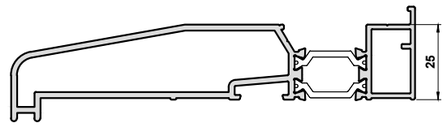

Increase all height deductions by 9mm or 18mm when using the projecting sub-cills.
9mm Deduction - ETC451, ETC452, ETC457, ETC458 & ETC479
18mm Deduction - ETC477

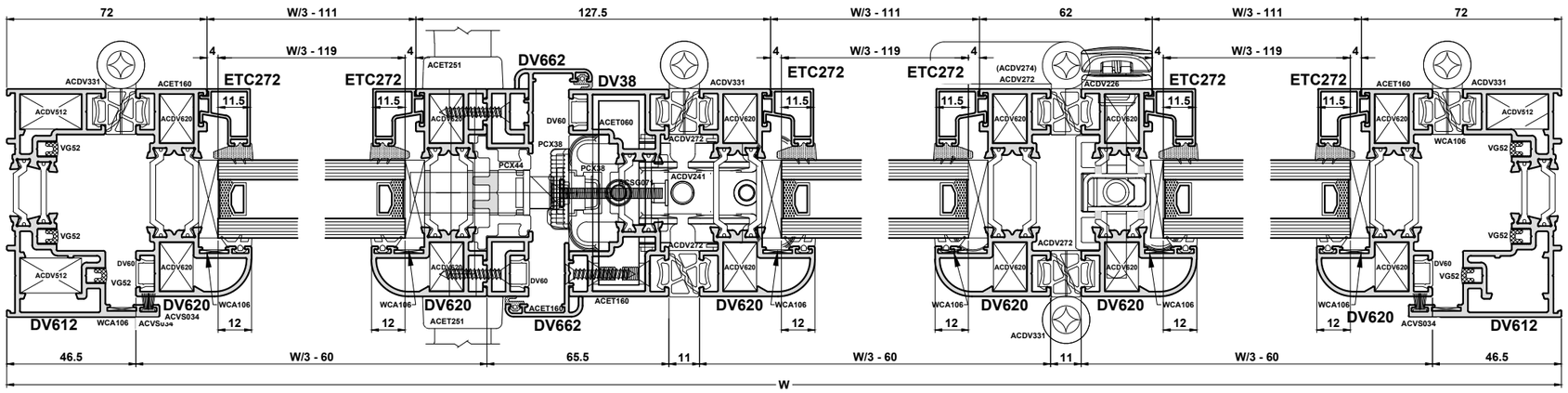

Do Not Scale From This Drawing

Cutting Information

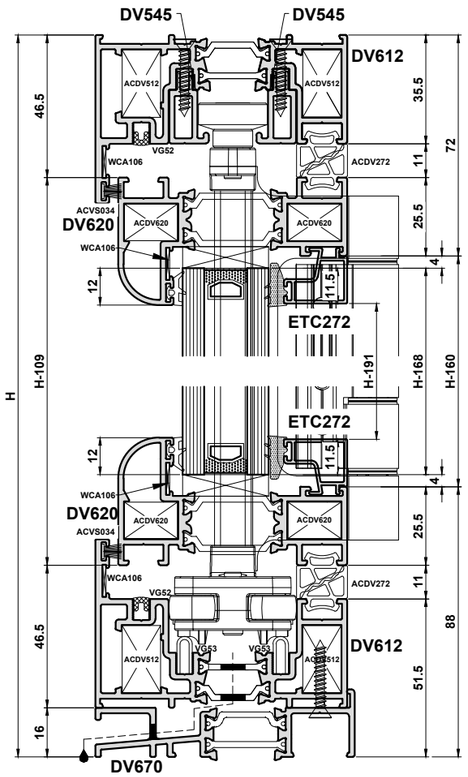

Sections

DV60*		3		H-109
DV545		1		W-36
DV545		1		150
DV545		1		W-186
DV545		2		H-68
DV612		2		H-16
DV612		2		W
DV620		6		H-109
DV620		6		W/3-44.5
DV640		2		H-109
DV662		1		H-109
DV670		1		W
VG52		2		H-70
VG52		2		H-87
VG52		2		W-71
VG53		2		W-36
PCX44		1		H-109
Bead		6		H-190
Bead		6		W/3-95.5

*Note: DV60 cover profile is optional.

Glass	
3 x	W/3 - 103.5
	H - 168

ACDV226	1	Shootbolt Handle
ACDV241	18	Lock & Keep Fixing Plate
ACDV251	1	Lever/Lever Handle
ACDV258	1	Cylinder
ACDV266	18	45mm Lock & Keep Fixing Screw
ACDV272	(Sash W - 78) (Sash H - 78)	Sealing Gasket
ACDV272	Cut between hinges.(Sash)	Sealing Gasket
ACDV272	Cut between hinges.(Frame)	Sealing Gasket
ACDV272	2 x Frame W - 36	Sealing Gasket
ACDV274	1	'D' Handle Hinge
ACDV275	3	Gasket Corner Moulds
ACDV331	10	Intermediate Hinges
ACDV375	4	Outer Frame Gasket Corner Moulds
ACDV566	1	Bottom roller Hinge
ACDV567	1	Top Guide Roller Hinge
ACDV571	12	Bridge Packer
ACDV612	8	DV512 Cleat
ACDV620	24	DV620 Cleat
ACDV640	1 Pair	Primary Door End Caps
ACDV663	1	Shootbolt Rod Pack
ACDV670	1 Pair	DV670 End Caps
ACDV577	1	Lock/Full Height Keep
ACET060	2xW@500 ctrs 3xH@500 ctrs	Self Tapping Screws
ACET067	4	Screws
ACET133	2	M5 x 50 Handle Screw
ACET160	3x(H - 109) 2x(W - 90)	Frame rebate gasket
ACET840	6x (W/3 - 103.5) 6 x (H - 191)	External Glazing Gasket
ACET842	6x (W/3 - 126.5) 6 x (H - 191)	Internal Glazing Gasket
WCA106	16	Chevron
+ Optional: 1 x ACDV305 Magnetic Catch		

Type 2i

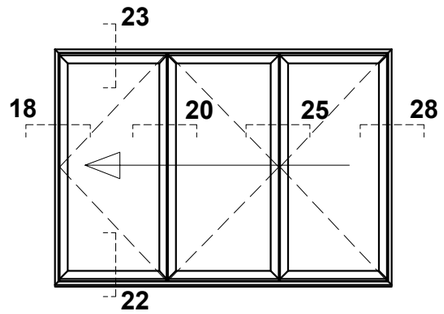

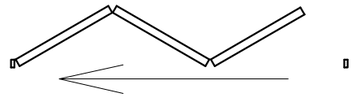

Important note
All deductions regarding heights are inclusive of DV670/DV570.
This is due to there not being a face drained option, thus a sub-cill must always be used to channel the drainage away from the frame in the approved manner.

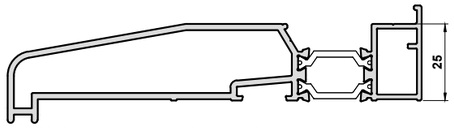

Increase all height deductions by 9mm or 18mm when using the projecting sub-cills.
9mm Deduction - ETC451, ETC452, ETC457, ETC458 & ETC479
18mm Deduction - ETC477

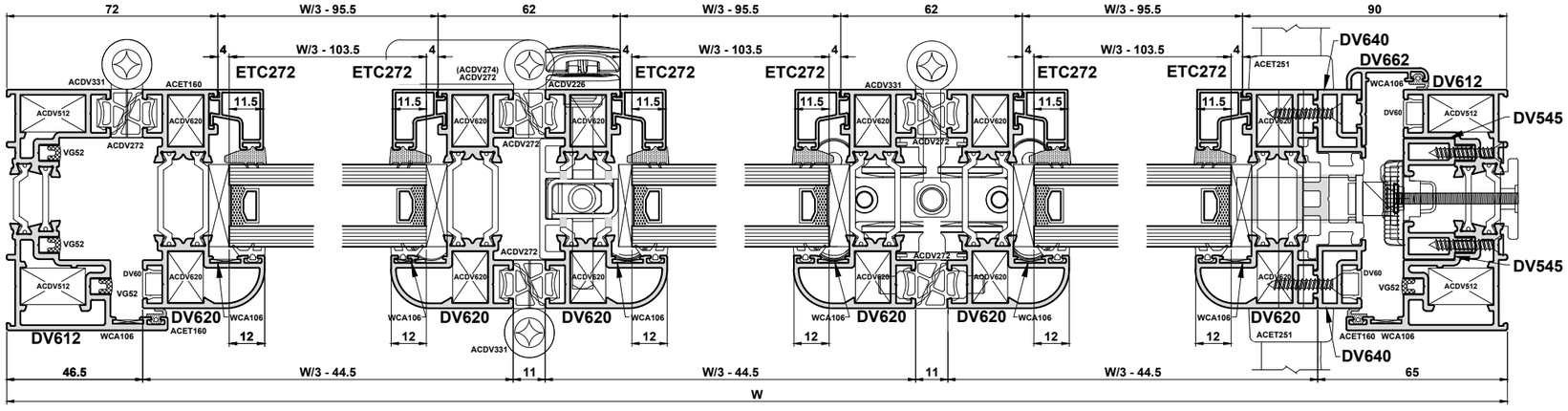

Do Not Scale From This Drawing

Cutting Information

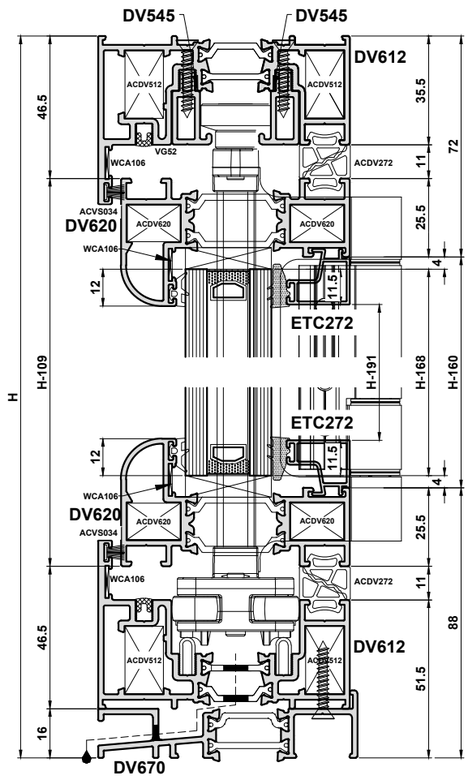

Sections

DV38		1		H-119
DV60*		3		H-109
DV545		1		W-36
DV545		1		150
DV545		1		W-186
DV612		2		H-16
DV612		2		W
DV620		8		H-109
DV620		8		W/4-43
DV640		2		H-109
DV662		1		H-109
DV670		1		W
VG52		2		H-70
VG52		4		H-87
VG52		2		W-71
VG53		2		W-36
Bead		8		H-191
Bead		8		W/4-94.5

*Note: DV60 cover profile is optional.

Glass	
4 x	W/4 - 102
	H - 168

ACDV226	2	Shootbolt Handle
ACDV272	(Sash W - 78) (Sash H - 78)	Sealing Gasket
ACDV272	Cut between hinges.(Sash)	Sealing Gasket
ACDV272	Cut between hinges.(Frame)	Sealing Gasket
ACDV272	2 x Frame W - 36	Sealing Gasket
ACDV274	2	'D' Handle Hinge
ACDV275	4	Gasket Corner Moulds
ACDV282	2	Isolator and Woolpile Carrier
ACDV331	18	Intermediate Hinges
ACDV375	4	Outer Frame Gasket Corner Moulds
ACDV512	8	DV612 Cleat
ACDV566	1	Bottom roller Hinge
ACDV567	1	Top roller Hinge
ACDV571	16	Bridge Packer
ACDV580	1	Mullion Bottom Roller
ACDV581	1	Mullion Top Guide Roller
ACDV620	32	DV620 Cleat
ACDV643	1 Pair	DV662 End Caps
ACDV663	2	Shootbolt Rod Pack
ACDV670	1 Pair	DV670 End Caps
ACET060	2xW@500 ctrs 3xH@500 ctrs	Self Tapping Screws
ACET067	4	Screws
ACET133	2	M5 x 50 Handle Screw
ACET160	1x(H-109)	Frame rebate gasket
ACET840	8x (W/3 - 102) 8 x (H - 191)	External Glazing Gasket
ACET842	8x (W/3 - 123) 8 x (H - 191)	Internal Glazing Gasket
ACSR012A	4x47mm	Woolpile For End Caps
ACVS034	2x(H - 109) 2x(W - 90)	Rebate Woolpile
WCA106	20	Chevron

+ Optional: 1 x ACDV305 Magnetic Catch

Type 3i

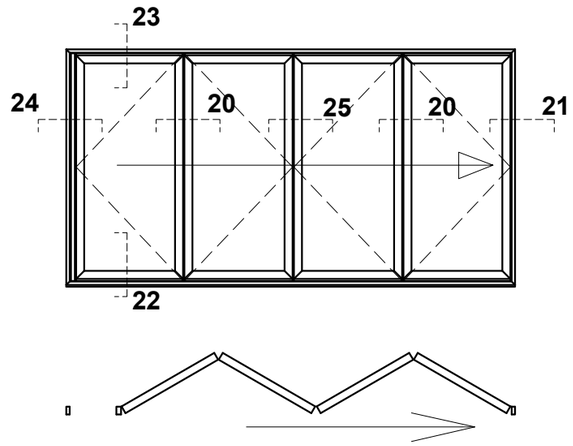

Important note
All deductions regarding heights are inclusive of DV670/DV570.
This is due to there not being a face drained option, thus a sub-cill must always be used to channel the drainage away from the frame in the approved manner.

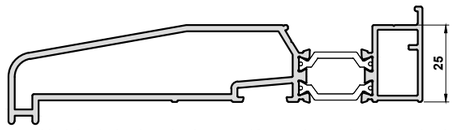

Increase all height deductions by 9mm or 18mm when using the projecting sub-cills.
9mm Deduction - ETC451, ETC452, ETC457, ETC458 & ETC479
18mm Deduction - ETC477

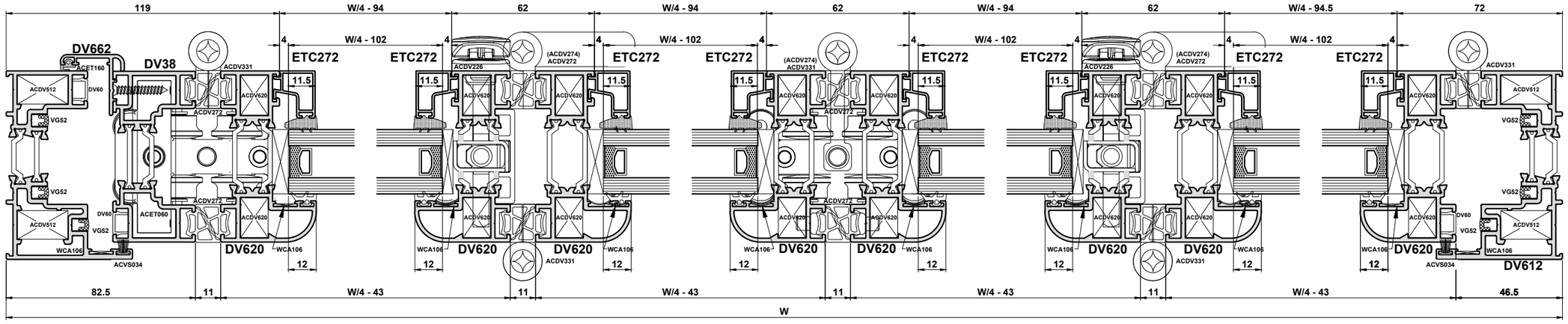

Do Not Scale From This Drawing

Cutting Information

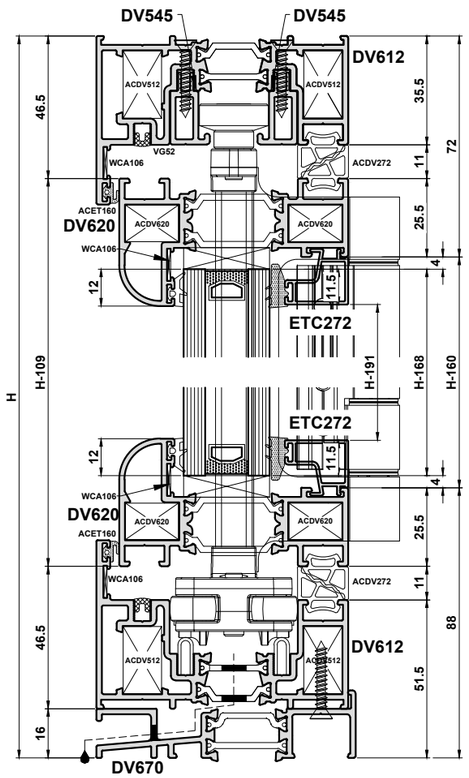

Sections

DV60*		4		H-109
DV545		1		W-36
DV545		1		150
DV545		1		W-186
DV612		2		H-16
DV612		2		W
DV620		8		H-109
DV620		8		W/4-42
DV640		2		H-109
DV645		2		H-109
DV662		2		H-109
DV670		1		W
VG52		2		H-70
VG52		4		H-87
VG52		2		W-71
VG53		2		W-36
PCX44		2		H-109
Bead		8		H-191
Bead		8		W/4-94

*Note: DV60 cover profile is optional.

Glass	
4 x	W/4 - 102
	H - 168

ACDV226	1	Shootbolt Handle
ACDV241	27	Lock & Keep Fixing Plate
ACDV251	2	Lever/Lever Handle
ACDV258	2	Cylinder
ACDV266	18	45mm Lock & Keep Fixing Screw
ACDV272	(Sash W - 78) (Sash H - 78)	Sealing Gasket
ACDV272	Cut between hinges.(Sash)	Sealing Gasket
ACDV272	Cut between hinges.(Frame)	Sealing Gasket
ACDV272	2 x Frame W - 36	Sealing Gasket
ACDV274	1	'D' Handle Hinge
ACDV275	4	Gasket Corner Moulds
ACDV331	14	Intermediate Hinges
ACDV375	4	Outer Frame Gasket Corner Moulds
ACDV512	8	DV612 Cleat
ACDV566	1	Bottom roller Hinge
ACDV567	1	Top Guide Roller Hinge
ACDV571	16	Bridge Packer
ACDV577	1	Lock/Full Height Keep
ACDV586	1	Secondary lock
ACDV620	32	DV620 Cleat
ACDV640	1 Pair	DV640 End Caps
ACDV642	1 Pair	DV645 End Caps
ACDV663	1	Shootbolt Rod Pack
ACDV670	1 Pair	DV670 End Caps
ACDV737	1	Bottom Shoot Bolt
ACDV738	1	Top Shot Bolt
ACET060	2xW@500 ctrs 3xH@500 ctrs	Self Tapping Screws
ACET067	4	Screws
ACET133	2	M5 x 50 Handle Screw
ACET160	4x(H - 109) 2x(W - 90)	Frame rebate gasket
ACET840	8x (W/4 - 99) 8 x (H - 191)	External Glazing Gasket
ACET842	8x (W/4 - 122) 8 x (H - 191)	Internal Glazing Gasket
WCA106	20	Chevron

+ Optional: 1 x ACDV305 Magnetic Catch

Type 4i

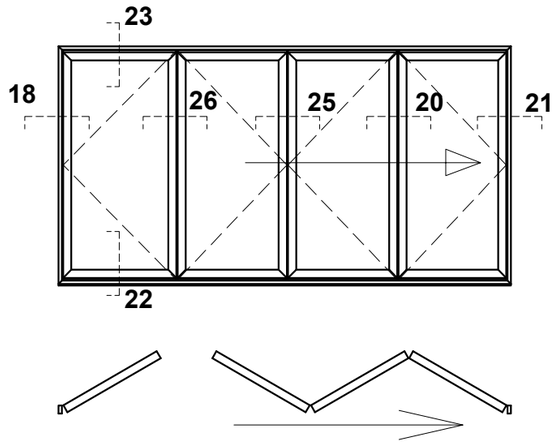

Important note
All deductions regarding heights are inclusive of DV670/DV570.
This is due to there not being a face drained option, thus a sub-cill must always be used to channel the drainage away from the frame in the approved manner.

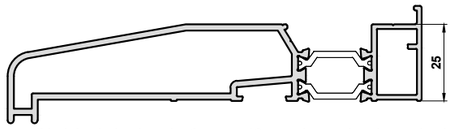

Increase all height deductions by 9mm or 18mm when using the projecting sub-cills.
9mm Deduction - ETC451, ETC452, ETC457, ETC458 & ETC479
18mm Deduction - ETC477

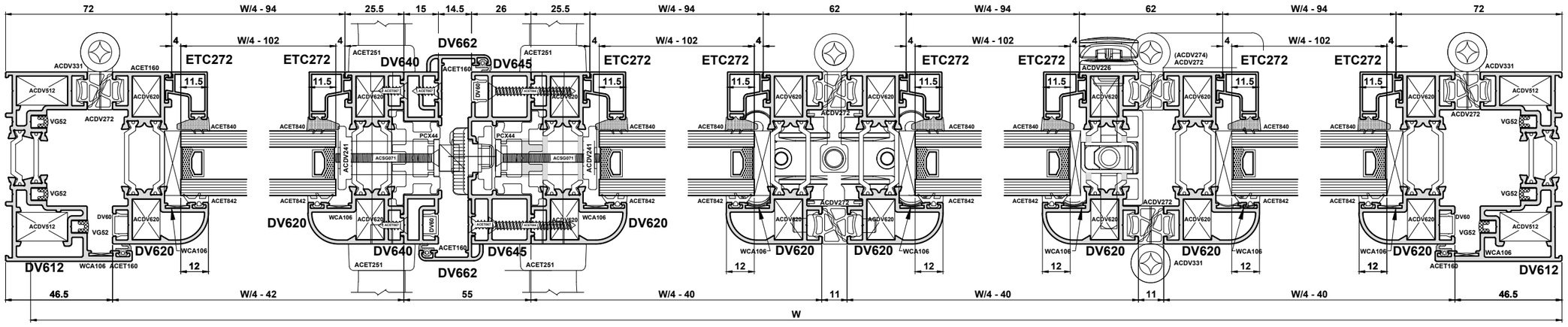

Do Not Scale From This Drawing

Cutting Information

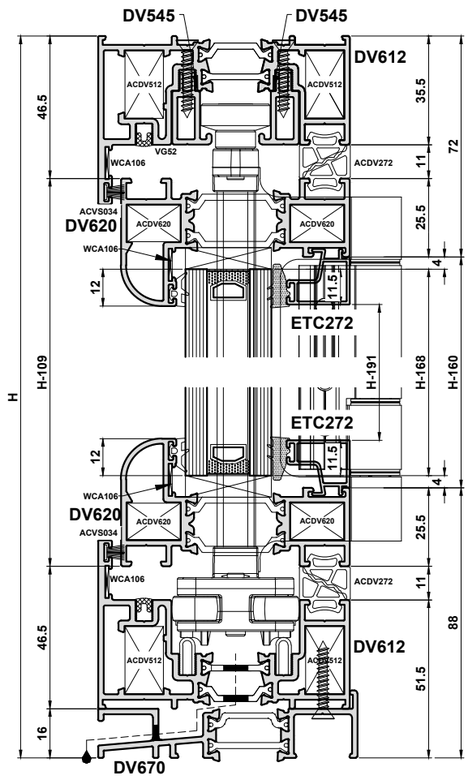

Sections

DV38		2		H-119
DV60*		4		H-109
DV545		1		W-36
DV545		1		150
DV545		1		W-186
DV612		2		H-16
DV612		2		W
DV620		8		H-109
DV620		8		W/4-55
DV662		2		H-109
DV670		1		W
VG52		2		H-70
VG52		4		H-87
VG52		2		W-71
VG53		2		W-36
Bead		8		H-191
Bead		8		W/4-106

*Note: DV60 cover profile is optional.

Glass	
4 x	W/4 - 114
	H - 168

ACDV226	2	Shootbolt Handle
ACDV272	(Sash W - 78) (Sash H - 78)	Sealing Gasket
ACDV272	Cut between hinges.(Sash)	Sealing Gasket
ACDV272	Cut between hinges.(Frame)	Sealing Gasket
ACDV272	2 x Frame W - 36	Sealing Gasket
ACDV274	2	'D' Handle Hinge
ACDV275	4	Gasket Corner Moulds
ACDV331	24	Intermediate Hinges
ACDV375	4	Outer Frame Gasket Corner Moulds
ACDV512	8	DV612 Cleat
ACDV571	16	Bridge Packer
ACDV580	2	Mullion Bottom roller
ACDV581	2	Mullion Top Guide Roller
ACDV590	2	Isolator and Woolpile Carrier
ACDV620	32	DV620 Cleat
ACDV643	2 Pairs	DV662 End Caps
ACDV663	2	Shootbolt Rod Pack
ACDV670	1 Pair	DV670 End Caps
ACET060	2xW@500 ctrs 3xH@500 ctrs	Self Tapping Screws
ACET067	4	Screws
ACET133	2	M5 x 50 Handle Screw
ACET160	2x(H-109)	Frame rebate gasket
ACET840	8 x (W/4 - 114) 8 x (H - 191)	External Glazing Gasket
ACET842	8 x (W/4 - 137) 8 x (H - 191)	Internal Glazing Gasket
ACSR012A	8x47mm	Woolpile For End Caps
ACVS034	2x(H - 109) 2x(W - 90)	Rebate Woolpile
WCA106	20	Chevron

+ Optional: 1 x ACDV305 Magnetic Catch

Type 5i

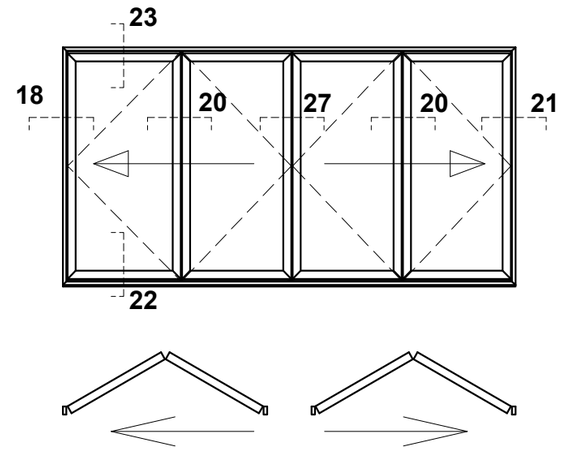

Important note
All deductions regarding heights are inclusive of DV670/DV570.
This is due to there not being a face drained option, thus a sub-cill must always be used to channel the drainage away from the frame in the approved manner.

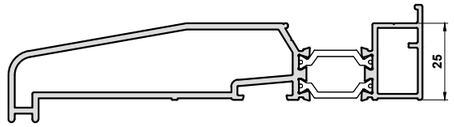

Increase all height deductions by 9mm or 18mm when using the projecting sub-cills.
9mm Deduction - ETC451, ETC452, ETC457, ETC458 & ETC479
18mm Deduction - ETC477

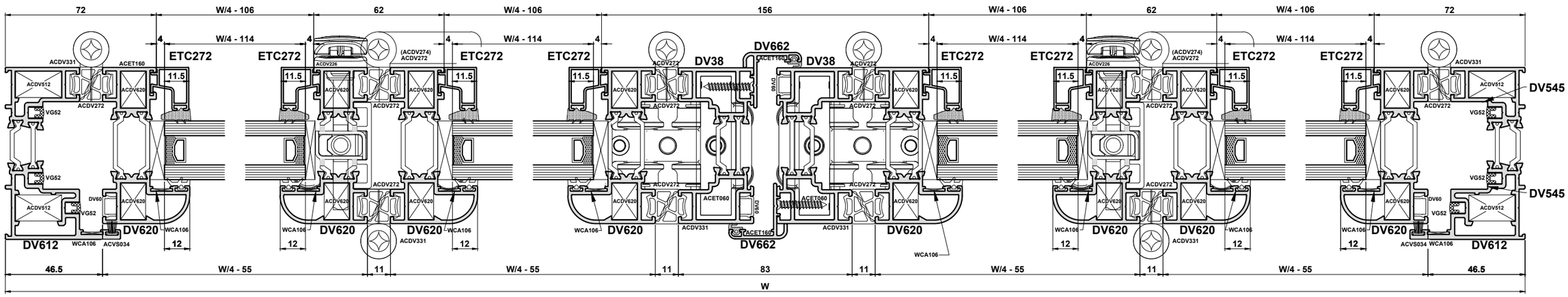

Do Not Scale From This Drawing

Cutting Information

Type 6i

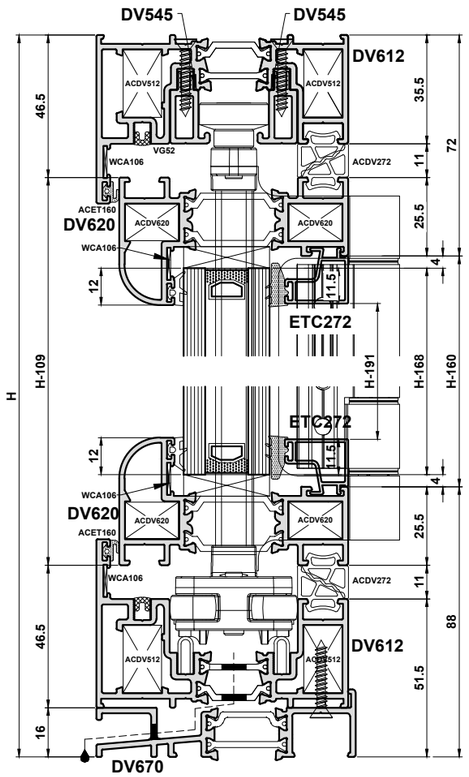

Sections

DV60*		3		H-109
DV545		1		W-36
DV545		1		150
DV545		1		W-186
DV545		2		H - 68
DV612		2		H-16
DV612		2		W
DV620		10		H-109
DV620		10		W/5-31
DV640		2		H-109
DV662		1		H-109
DV670		1		W
PCX44		1		H-109
VG52		2		H-70
VG52		2		H-87
VG52		2		W-71
VG53		2		W-36
Bead		10		H-191
Bead		10		W/5-82

*Note: DV60 cover profile is optional.

Glass	
5 x	W/5 - 90
	H - 168

ACDV226	2	Shootbolt Handle
ACDV241	18	Lock & Keep Fixing Plate
ACDV251	1	Lever/Lever Handle
ACDV258	1	Cylinder
ACDV266	18	45mm Lock & Keep Fixing Screw
ACDV272	(Sash W - 78) (Sash H - 78)	Sealing Gasket
ACDV272	Cut between hinges.(Sash)	Sealing Gasket
ACDV272	Cut between hinges.(Frame)	Sealing Gasket
ACDV272	2 x Frame W - 36	Sealing Gasket
ACDV274	2	'D' Handle Hinge
ACDV275	5	Gasket Corner Moulds
ACDV331	16	Intermediate Hinges
ACDV375	4	Outer Frame Gasket Corner Moulds
ACDV512	8	DV512 Cleat
ACDV566	2	Mullion Bottom roller Hinge
ACDV567	2	Mullion Top Roller Hinge
ACDV571	20	Bridge Packer
ACDV577	1	Lock/Full Height Keep
ACDV620	40	DV620 Cleat
ACDV640	1 Pair	DV640 End Caps
ACDV663	2	Shootbolt Rod Pack
ACDV670	1 Pair	DV670 End Caps
ACET060	2xW@500 ctrs 3xH@500 ctrs	Self Tapping Screws
ACET067	4	Screws
ACET133	2	M5 x 50 Handle Screw
ACET160	3x(H - 109) 2x(W - 90)	Frame rebate gasket
ACET840	10 x (W/5 - 90) 10 x (H - 191)	External Glazing Gasket
ACET842	10 x (W/5 - 113) 10 x (H - 191)	Internal Glazing Gasket
WCA106	24	Chevron
+ Optional: 1 x ACDV305 Magnetic Catch		

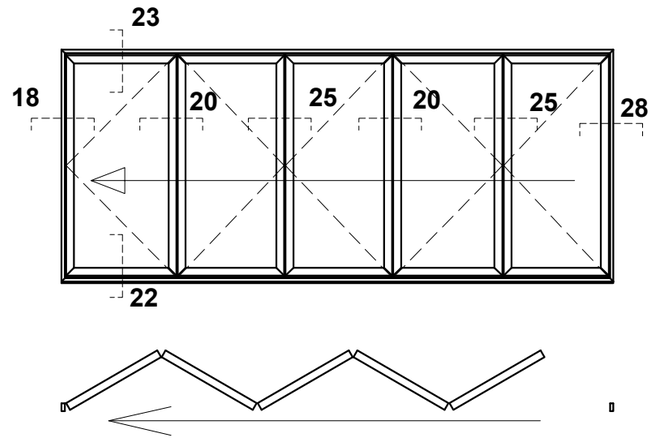

Important note
All deductions regarding heights are inclusive of DV670/DV570.
This is due to there not being a face drained option, thus a sub-cill must always be used to channel the drainage away from the frame in the approved manner.

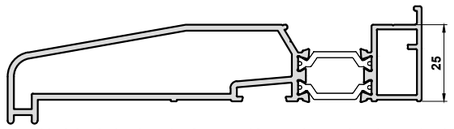

Increase all height deductions by 9mm or 18mm when using the projecting sub-cills.
9mm Deduction - ETC451, ETC452, ETC457, ETC458 & ETC479
18mm Deduction - ETC477

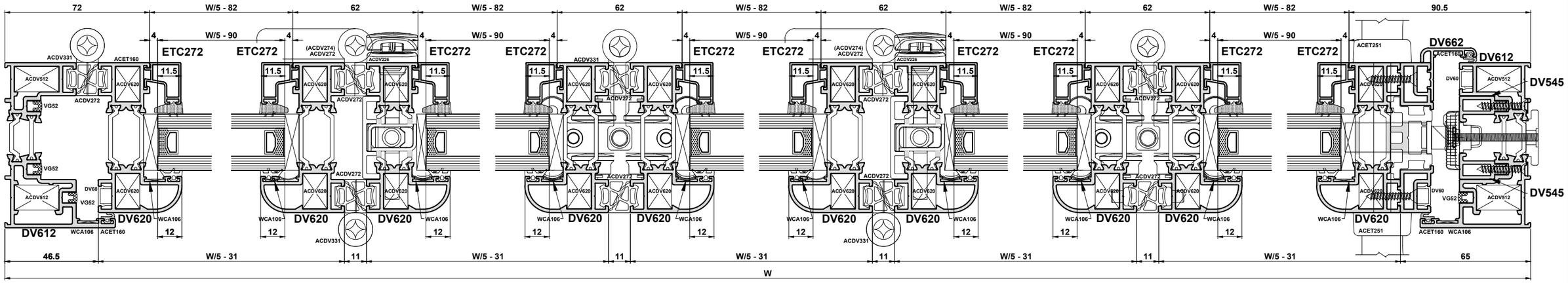

Do Not Scale From This Drawing

Cutting Information

Single Door

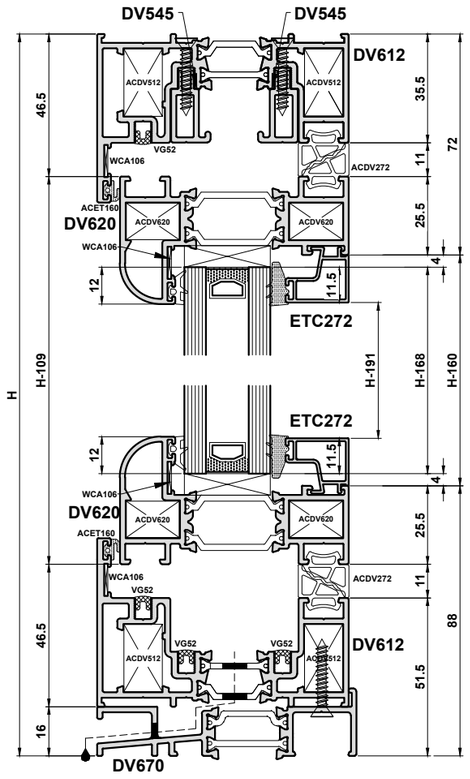

Sections

DV60*		3		H-109
DV545		2		H - 68
DV612		2		H-16
DV612		2		W
DV620		2		H-109
DV620		2		W-111
DV640		2		H-109
DV662		1		H-109
DV670		1		W
PCX44		1		H-109
VG52		2		H-70
VG52		2		H-87
VG52		2		W-71
VG52		4		W-36
Bead		2		H-191
Bead		2		W -162.5

*Note: DV60 cover profile is optional.

Glass	
1 x	W - 170
	H - 168

ACDV241	18	Lock & Keep Fixing Plate
ACDV251	1	Lever/Lever Handle
ACDV258	1	Cylinder
ACDV266	18	45mm Lock & Keep Fixing Screw
ACDV272	(Sash W - 78) (Sash H - 78)	Sealing Gasket
ACDV272	Cut between hinges.(Sash)	Sealing Gasket
ACDV272	2 x Frame W - 36	Sealing Gasket
ACDV272	Cut between hinges.(Frame)	Sealing Gasket
ACDV275	1	Gasket Corner Moulds
ACDV331	4	Intermediate Hinges
ACDV375	2	Outer Frame Gasket Corner Moulds
ACDV512	8	DV612 Cleat
ACDV571	4	Bridge Packer
ACDV577	1	Lock/Full Height Keep
ACDV620	8	DV620 Cleat
ACDV640	1 Pair	Primary Door End caps
ACDV670	1 Pair	DV670 End Caps
ACET060	2xW@500 ctrs 3xH@500 ctrs	Self Tapping Screws
ACET067	4	Screws
ACET133	2	M5 x 50 Handle Screw
ACET160	3x(H - 109) 2x(W - 90)	Frame rebate gasket
ACET840	2 x (W - 171) 2 x (H - 191)	External Glazing Gasket
ACET842	2 x (W - 194) 2 x (H - 191)	Internal Glazing Gasket
WCA106	8	Chevron
+ Optional: 1 x ACDV305 Magnetic Catch		

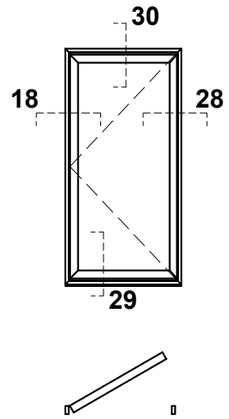

Important note
All deductions regarding heights are inclusive of DV670/DV570.
This is due to there not being a face drained option, thus a sub-cill must always be used to channel the drainage away from the frame in the approved manner.

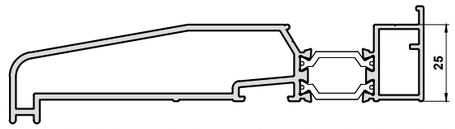

Increase all height deductions by 9mm or 18mm when using the projecting sub-cills.
9mm Deduction - ETC451, ETC452, ETC457, ETC458 & ETC479
18mm Deduction - ETC477

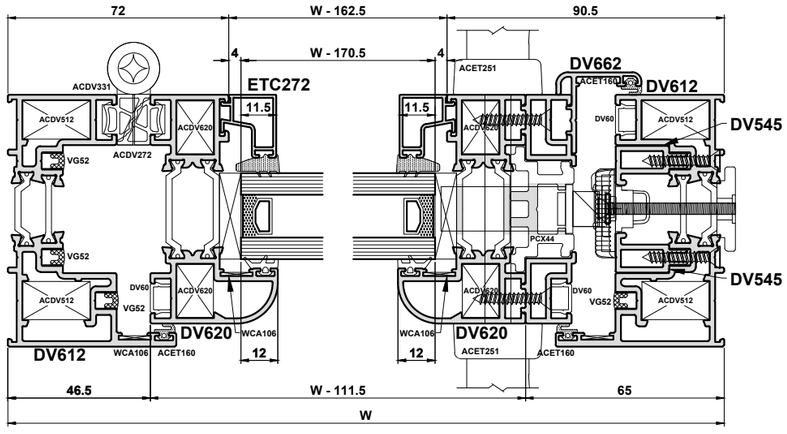

Do Not Scale From This Drawing

Cutting Information

Double Swing Door

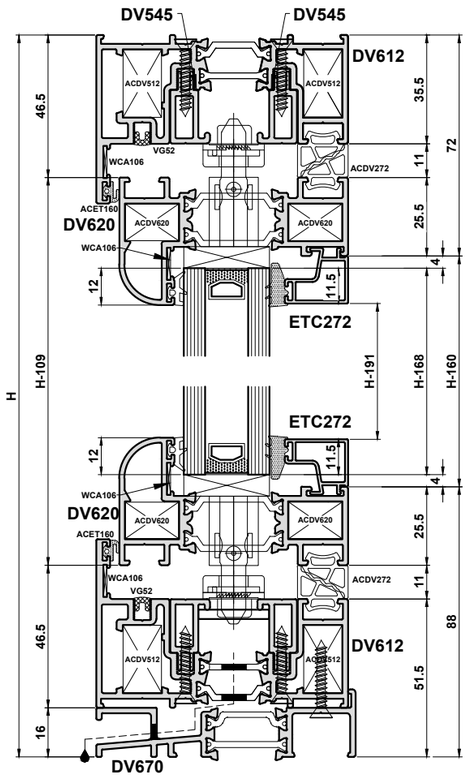

Sections

DV60*		4		H-109
DV545		4		W-36
DV612		2		H-16
DV612		2		W
DV620		4		H-109
DV620		4		W/2-74
DV640		2		H-109
DV645		2		H-109
DV662		2		H-109
DV670		1		W
PCX44		2		H-109
VG52		2		H-70
VG52		2		H-87
VG52		2		W-71
Bead		4		H-191
Bead		4		W/2-125

*Note: DV60 cover profile is optional.

Glass	
2 x	W/2 - 133
	H - 168

ACDV241	27	Lock & Keep Fixing Plate
ACDV251	2	Lever/Lever Handle
ACDV258	2	Cylinder
ACDV266	18	45mm Lock & Keep Fixing Screw
ACDV272	4x(Sash W - 78) 4x(Sash H - 78)	Sealing Gasket
ACDV272	8 x Cut between hinges.(Sash)	Sealing Gasket
ACDV272	2 x Frame W - 36	Sealing Gasket
ACDV272	4 x cut between hinges.(Frame)	Sealing Gasket
ACDV275	2	Gasket Corner Moulds
ACDV331	8	Intermediate Hinges
ACDV375	4	Outer Frame Gasket Corner Moulds
ACDV512	8	DV612 Cleat
ACDV571	8	Bridge Packer
ACDV576/577	1	Lock/Full Height Keep
ACDV586	1	Secondary Door Lock
ACDV620	16	DV620 Cleat
ACDV640	1	Primary Door End Caps
ACDV642	1	Secondary Door End Caps
ACDV670	1 Pair	DV670 End Caps
ACDV737	1	Bottom Shoot Bolt
ACDV738	1	Top Shoot Bolt
ACET060	2xW@500 ctrs 3xH@500 ctrs	Self Tapping Screws
ACET067	4	Screws
ACET133	2	M5 x 50 Handle Screw
ACET160	4x(H - 109) 2x(W - 90)	Frame rebate gasket
ACET840	4 x (W/2 - 128) 4 x (H - 191)	External Glazing Gasket
ACET842	4 x (W/2 - 151) 4 x (H - 191)	Internal Glazing Gasket
ACVL059	1 Pair	End Caps for VL72
ACVL061	W @ 500 ctrs	Rivet for VL72
WCA106	12	Chevron

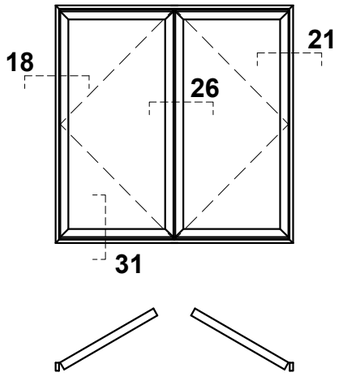

Important note
All deductions regarding heights are inclusive of DV670/DV570.
This is due to there not being a face drained option, thus a sub-cill must always be used to channel the drainage away from the frame in the approved manner.

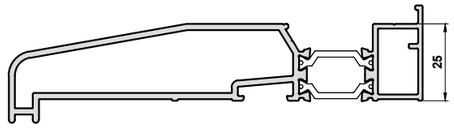

Increase all height deductions by 9mm or 18mm when using the projecting sub-cills.
9mm Deduction - ETC451, ETC452, ETC457, ETC458 & ETC479
18mm Deduction - ETC477

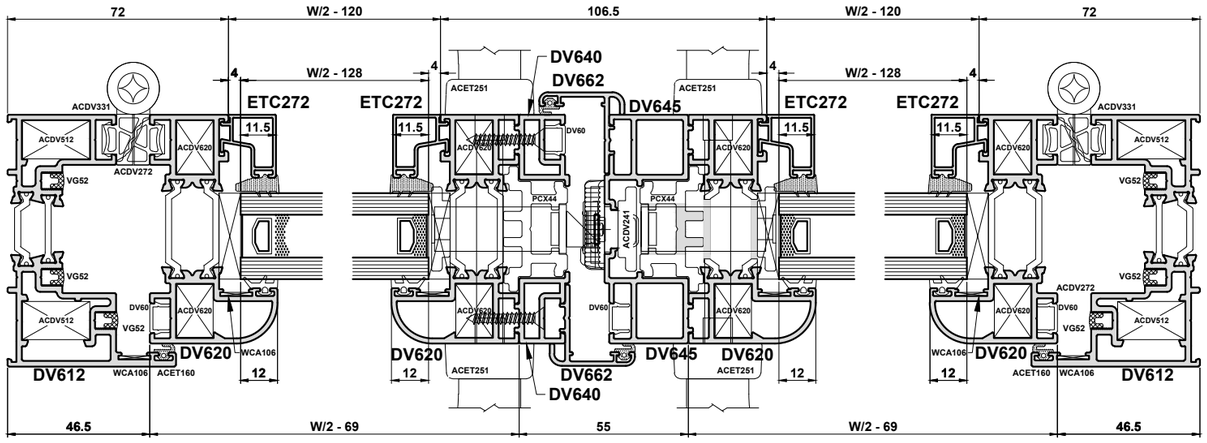

Do Not Scale From This Drawing

Cutting Information

Double Slide & Fold Door

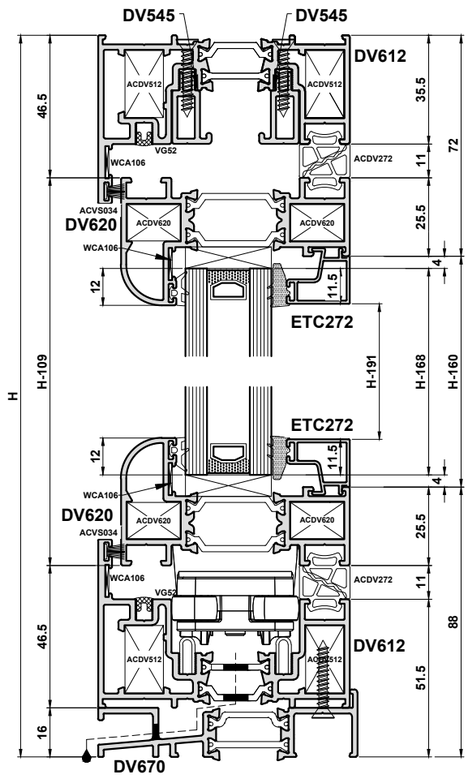

Sections

DV38		1		H-119
DV60*		3		H-109
DV545		1		W-36
DV545		1		150
DV545		1		W-186
DV612		2		H-16
DV612		2		W
DV620		4		H-109
DV620		4		W/3-60
DV662		1		H-109
DV670		1		W
VG52		2		H-70
VG52		4		H-87
VG52		2		W-71
VG53		2		W-36
Bead		4		H-191
Bead		4		W/2-127

*Note: DV60 cover profile is optional.

Glass	
2 x	W/2 - 135
	H - 168

ACDV226	1	Shootbolt Handle
ACDV272	Sash W - 78) (Sash H - 78)	Sealing Gasket
ACDV272	Cut between hinges.(Sash)	Sealing Gasket
ACDV272	2 x Frame W - 36	Sealing Gasket
ACDV272	Cut between hinges.(Frame)	Sealing Gasket
ACDV274	1	'D' Handle
ACDV275	2	Gasket Corner Moulds
ACDV331	12	Intermediate Hinges
ACDV375	4	Outer Frame Gasket Corner Moulds
ACDV571	8	Bridge Packer
ACDV580	1	Mullion Bottom Roller
ACDV581	1	Mullion Top Guide Roller
ACDV590	1	Isolator and Woolpile Carrier
ACDV610	8	DV612 Cleat
ACDV620	16	DV620 Cleat
ACDV643	1 Pair	DV662 End Caps
ACDV663	1	Shootbolt Rod Pack
ACDV670	1 Pair	DV670 End Caps
ACET060	2xW@500 ctrs 3xH@500 ctrs	Self Tapping Screws
ACET067	4	Screws
ACET133	2	M5 x 5 Handle Screw
ACET160	(H-109)	Frame rebate gasket
ACET840	4 x (W/2 - 150) 4 x (H - 191)	External Glazing Gasket
ACET842	4 x (W/2 - 173) 4 x (H - 191)	Internal Glazing Gasket
ACSR012A	4x47mm	Woolpile For End Caps
ACVS034	2x(H - 109) 2x(W - 90)	Rebate Woolpile
WCA106	12	Chevron
+ Optional: 1 x ACDV305 Magnetic Catch		

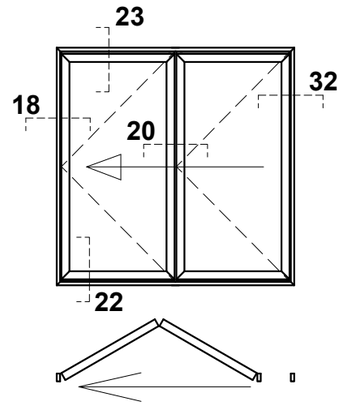

Important note
All deductions regarding heights are inclusive of DV670/DV570.
This is due to there not being a face drained option, thus a sub-cill must always be used to channel the drainage away from the frame in the approved manner.

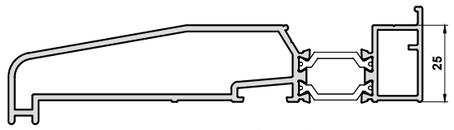

Increase all height deductions by 9mm or 18mm when using the projecting sub-cills.
9mm Deduction - ETC451, ETC452, ETC457, ETC458 & ETC479
18mm Deduction - ETC477

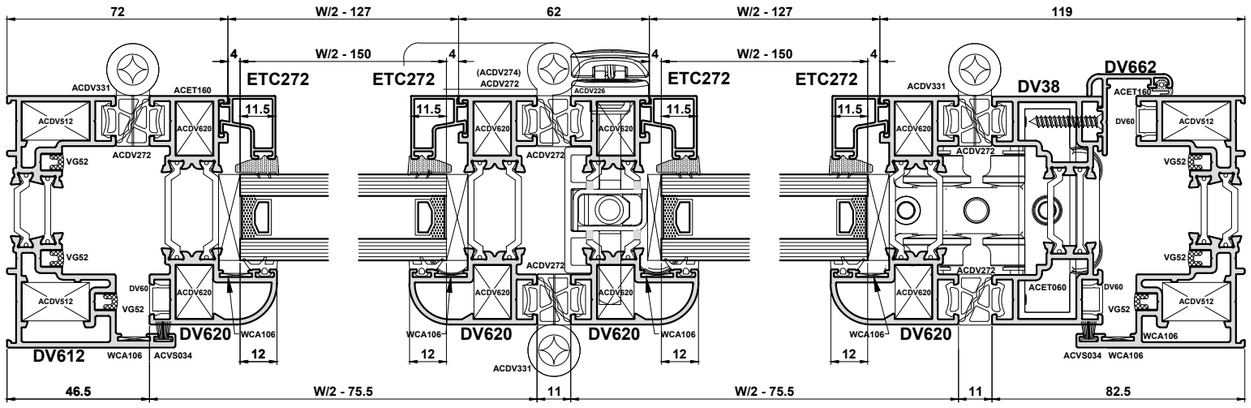

Do Not Scale From This Drawing

Cutting Information

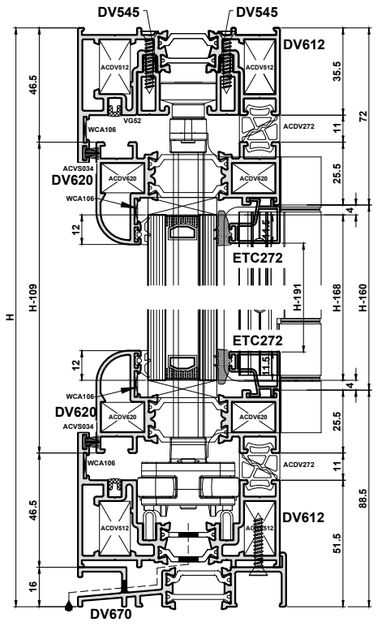

Sections

DV38		1		H-119
DV60*		4		H-109
DV545		1		W-36
DV545		1		150
DV545		1		W-186
DV612		2		H-16
DV612		2		W
DV620		10		H-109
DV620		10		W/5-40.5
DV640		2		H-109
DV662		2		H-109
DV670		1		W
PCX44		1		H-109
PCX38		1		H-109
VG52		2		H-70
VG52		4		H-87
VG52		2		W-71
VG53		2		W-36
Bead		10		H-191
Bead		10		W/5-91.5

*Note: DV60 cover profile is optional.

Glass	
5 x	W/5 - 100
	H - 168

ACDV226	2	Shootbolt Handle
ACDV241	18	Lock & Keep Fixing Plate
ACDV251	2	Lever/Lever Handle
ACDV258	1	Cylinder
ACDV266	18	45mm Lock & Keep Fixing Screw
ACDV272	Cut between hinges.(Frame)	Sealing Gasket
ACDV272	(Sash W - 78) (Sash H - 78)	Sealing Gasket
ACDV272	Cut between hinges.(Sash)	Sealing Gasket
ACDV272	2 x Frame W - 36	Sealing Gasket
ACDV274	2	'D' Handle hinge
ACDV275	5	Gasket Corner Moulds
ACDV331	22	Intermediate Hinges
ACDV375	4	Outer Frame Gasket Corner Moulds
ACDV512	8	DV612 Cleat
ACDV566	1	Mullion Bottom Roller Hinge
ACDV567	1	Top Guide Roller Hinge
ACDV571	20	Bridge Packer
ACDV577	1	Lock/Full Height Keep
ACDV580	1	Mullion Bottom Roller
ACDV581	1	Mullion Top Roller
ACDV620	40	DV620 Cleat
ACDV640	1 Pair	Primary Door End Caps
ACDV643	1 Pair	DV662 End Caps (Secondary)
ACDV663	2	Shootbolt Rod Pack
ACDV670	1 Pair	DV670 End Caps
ACET060	2xW@500 ctrs 3xH@500 ctrs	Self Tapping Screws
ACET067	4	Screws
ACET133	2	M5 x 50 Handle Screw
ACET160	2x(H-109)	Frame rebate gasket
ACET840	10 x (W/5 - 100) 10 x (H - 191)	External Glazing Gasket
ACET842	10 x (W/5 - 123) 10 x (H - 191)	Internal Glazing Gasket
ACVS034	2x(H - 109) 2x(W - 90)	Rebate Woolpile
WCA106	24	Chevron
+ Optional: 1 x ACDV305 Magnetic Catch		

3/2 Split Door

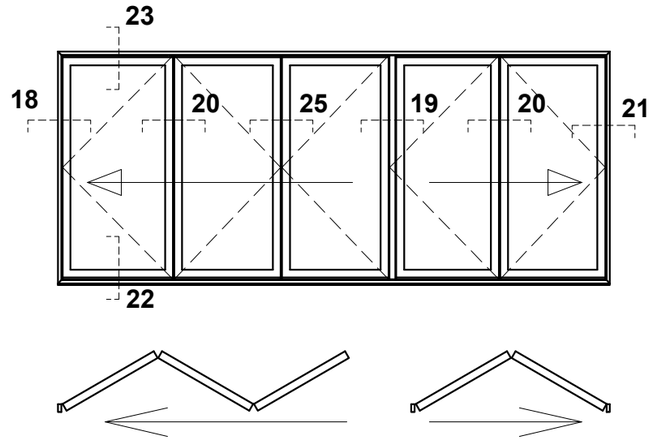

Important note
All deductions regarding heights are inclusive of DV670/DV570.
This is due to there not being a face drained option, thus a sub-cill must always be used to channel the drainage away from the frame in the approved manner.

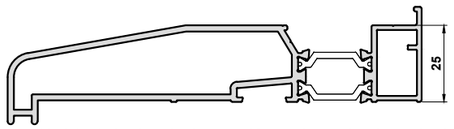

Increase all height deductions by 9mm or 18mm when using the projecting sub-cills.
9mm Deduction - ETC451, ETC452, ETC457, ETC458 & ETC479
18mm Deduction - ETC477