Main Index

Main Index

F W

Sawing Tables

Updates

DATE	PAGE	DESCRIPTION
27-01-17	E.33-E.36	The glazing wedge gasket ACW20038 Has been replaced with ACET840 as the original was too loose in the section. This amendment only applies to section W20122
04-07-17	E.23	ACSB787 updated to new number ACSZ905
12-07-17	B.27, E.25 & E.29	Added left and right details for ACW20138
	C.67 & C.81	Amended handle details

Specification

GENERAL DESCRIPTION

The "Alitherm Heritage" window system described in this manual is designed to offer a modern aluminium thermally broken replacement to steel windows. Taking inspiration from traditional steel windows, Alitherm Heritage features signature slim sightlines and attractive aesthetic contours coupled with polyamide thermal break technology giving Alitherm Heritage enhanced thermal performance and narrow sightlines.

The Alitherm Heritage is designed to be built as a series of horizontal or vertical modules which can be stacked using horizontal couplers to form a multi-part window featuring a specially design drip bar between modules.

Applications:

Windows:

- Fixed windows
- Side hung open out casements
- Top hung open out casements
- Tilt & Turn

Doors:

- Single open out & open in doors
- Double open out & open in doors

Corner assembly of Alitherm Heritage is crimping only.

RECOMMENDED DESIGN TILT/TURN & DOOR LIMITATIONS

Windows

Tilt & Turn Vents:

Maximum Width: 1200mm
Minimum Width: 402mm
Maximum Height: 1600mm (at 900mm wide)
Minimum Height: 600mm (SB Chrono)
500mm (Fapim)
Maximum Weight: 90kg
See page E21 for more details

Doors

Door Sashes:

Maximum Width: 900mm
Minimum Width: 600mm
Maximum Height: 2100mm
Minimum Height: 1000mm (leaving 3 locking points)
Maximum Weight: 60kg

SEE PAGE A04 FOR CASEMENT DESIGN LIMITATIONS

For advise on window sizes outside of the recommended design limitations, please contact the Technical Department at Smart Systems Ltd Tel: 01934 876100

Specification

Kitemark™ Certificate No. KM 81580
WINDOW DESIGN LIMITATIONS & PERFORMANCE CHARACTERISTICS

Window Type	Width (mm) - Maximum	Height (mm) - Maximum	Weight (kg) - Maximum	Area (M²) - Maximum	Friction Stays (up to and including)	Transom/Mullion Length (mm) inc frame - Maximum	Air Permeability classification	Water tightness classification	Resitance to Wind classification	Exposure category as given in Table 1 of BS 6375-1:2009
Sash dimensions for windows with approved sash profiles:										
Projecting top hung Internally beaded	1400	1400	40	-	24"	-	4	7A	AE2400	2000+
Projecting top hung Externally beaded	1400	1400	40	-	24"	-	4	5A	AE2400	2000+
Projecting side hung Internally beaded	600	1400	28	-	16"	-	4	7A	AE2400	2000+
Projecting side hung Externally beaded	600	1400	28	-	16"	-	4	5A	AE2400	2000+
Overall dimensions for windows with approved outer frame profiles:										
Fixed Internally Beaded	2100	2100	-	4.2	-	-	4	7A	AE2400	2000+
Fixed Externally Beaded	2100	2100	-	4.2	-	-	4	5A	AE2400	2000+
Overall dimensions for approved outer frames & transom/mullion profiles:										
Multilights* W2035 T/M Internally Beaded	2100	2100	-	2.5	-	1200	4	7A	AE2400	2000+
Multilights* W2035 T/M Externally Beaded	2100	2100	-	2.5	-	1200	4	5A	AE2400	2000+

*Transom/mullion subject to Ixx/Iyy requirements

Please see pages B32, 33 & 34 for more guidance on vent sizes, limitations & hardware selection.

Classifications & Values

Air Permeability	Class 1 150Pa	Class 2 300Pa	Class 3 600Pa	Class 4 600Pa						
Water Tightness	Class 1A 0Pa	Class 2A 50Pa	Class 3A 100Pa	Class 4A 150Pa	Class 5A 200Pa	Class 6A 250Pa	Class 7A 300Pa	Class 8A 450Pa	Class 9A 600Pa	Class Exxx
Resistance to Wind	Class 1 400Pa	Class 2 800Pa	Class 3 1200Pa	Class 4 1600Pa	Class 5 2000Pa	Class Exxx				

Specification

PROFILE SPECIFICATION

The window frames are constructed of aluminium alloy extrusion to BS EN 755-9 and BS EN 12020, extruded from 6063 T6 alloy. The internal and external extrusions are separated with a polyamide thermal break.

The external aluminium alloy extrusion is pre-treated and finished either:-

Anodised to BS 3987: 1987, grade AA25 to a natural self colour.

a) Anodised to BS 3987 : 1987, grade AA25 to a natural colour.

b) Polyester powder organic coating to BS 6496. Dual colour is available.

GENERAL MANUFACTURING

Outer and vent frames are made by cutting the frame profiles with accurate 45° mitred ends using Tungsten Carbide Tipped Saw Blades, operating at approximately 3000 rpm.

The corners are joined using the Alitherm Heritage crimping tools to form a cold forged corner joint (made by deforming small slugs of metal into the groove of the corner cleat).

The ends of transoms and mullions are profiled to fit the frame and fixed using self-tapping screws with a small joint sealant.

On polyester powder coated finishes, great care should be taken to avoid getting gap sealer on visible surfaces and should be removed as soon as possible with a clean cloth.

Care should be exercised when using products not supplied by Smart Systems Ltd as no responsibility can be accepted.

Specification

WINDOW DRAINAGE

As with all dry glazed systems, it is recommended that the window system is adequately drained and ventilated. Refer to drainage details in manual, if in doubt ask The Technical Department.

In order to get maximum performance and weather resistance it is recommended that drips are used over all vents.

OUTER FRAME MANUFACTURING INFORMATION

The outer frame members are cut with 45° mitred ends to the overall size required, measured to the longest point of the metal.

Prior to corner crimping the centre line position of any transoms or mullions should be marked on the outer frame members. Where the transom/mullion runs right through, it should be marked out on both jambs or head and cill members in pairs to ensure accurate alignment of the sections.

Using the marked centre line, Drill the transom/mullion fixing holes using a 5mm dia. drill bit.

Corners are formed by coating the cut faces to be joined with a suitable small gap sealer. Into the mitred corner insert the cleat glue and the required corner cleats and, where required, the aluminium corner chevrons. The two mitred ends are then brought together and crimped. The small gap sealer ensures a permanent joint and guards against the ingress of moisture and joint movement. After crimping the corner joint, special care should be taken to ensure any excess sealer is removed from painted surfaces.

Transoms or mullions are cut with square ends to the sizes calculated on the cutting formula sheets. The ends are then profiled to allow them to fit into the outer frame. Special tooling is available on request to profile the end of transom/mullion.

Prior to fixing of transoms and mullions smear the cut ends with a suitable small gap sealer. After fixing, special care should be taken to ensure any excess is cleared from painted surfaces.

VENT

Corners are formed by coating the cut faces to be joined with a suitable gap sealer. In the mitred corner insert the cleat glue and the required corner cleats and chevrons. The mitred ends are then brought together and crimped. The small gap sealer ensures a permanent joint and guards against the ingress of moisture and joint movement. Care should be taken to ensure any excess sealer is removed from the surfaces.

The cutting sizes produce vent frames with a cavity of 13mm.

When fixing, the friction stays into both the outer and vent frame, care should be taken to ensure that holes are located on 'V' grooves in the aluminium extrusions.

Specification

INTERNALLY BEADED ADAPTOR FRAME

The internally beaded adaptor frame members are cut with 45° mitred ends to the overall size required, measured to the longest point of metal. Care should be taken when measuring and cutting the frame members as only nominal clearance is required when the assembled frame is fixed in the outer frame.

Corners are formed by coating the cut faces to be joined with a suitable small gap sealer. Into the mitred corner insert the cleat glue and a corner cleat and the required corner chevrons. The small gap sealer ensures a permanent joint and guards against the ingress of moisture and joint movements. Care should be taken to ensure any excess sealer is removed from painted surfaces.

GLAZING

All beads are cut to suit the glazing aperture on the fully assembled window for glazing either at factory or on site as required. We recommend using black spacer bars.

EXTERNALLY BEADED GLAZING

Glazing beads are fitted to openings by cutting the horizontal beads square to head and cill of each vent and fixed light area. Vertical beads are cut at 45° or 90° both ends. When using glazing beads ETC364, ETC370, ETC371, ETC375, ETC376, ETC377, ETC378 & ETC379 slide retained ACET845 gasket into section and ensure it is not stretched. Insert bottom beads and two setting blocks to ensure glass will be centralized in vertical dimension of opening (glazing blocks must be full width of cavity to fully support glass or sealed unit), then insert top bead followed by side beads. Finish glazing by insertion of internal gaskets all round.

INTERNALLY BEADED GLAZING

Glazing beads are fitted to openings by cutting the horizontal beads square to head and cill of each vent and fixed light area. Vertical beads are cut square at both ends. Insert bottom beads and two setting blocks to ensure glass will be centralized in vertical dimension of opening (glazing blocks must be full width of cavity to fully support glass or sealed unit), then insert top bead followed by side beads. Finish glazing by insertion of internal gaskets all round except in the case of 28mm glazing where glazing tape is used in conjunction with vent profile W20026.

Alitherm Heritage Window U Values

Please refer to the Smart Systems' Document L White Paper or contact the Technical Department.

Number	Picture	Page	Perim. mm	Mec. mm	Ix(cm4) wx(cm3)	Iy(cm4) wy(cm3)	Length	Pack pr.	MF	SA	KL	HP	M
W20015	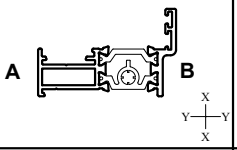	A17	255	60	8.08 / — / 2.91	1.43 / -— / 1.21	6.5	1	✓	✓	✓	✓	✓
W20016	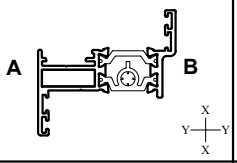	A17	300	77	10.26 / — / 3.72	2.59 / -— / 1.1	6.5	1	✓	✓	✓	✓	✓
W20017	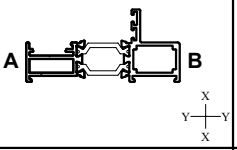	A17	297	74	27.70 / ----- / 6.35	2.37 / ----- / 2.41	6.5	1	✓	✓	✓	✓	✓
W20018	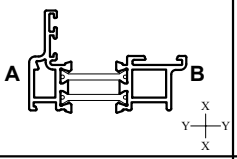	A18	262	63	9.74 / — / 3.08	2.42 / -— / 1.07	6.5	1	✓	✓	✓	✓	✓
W20024	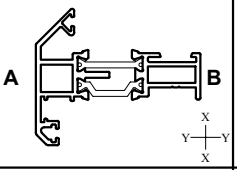	A19	334	75	11.91 / — / 5.17	2.87 / -— / 1.25	6.5	1	✓	✓	✓	✓	✓
W20025	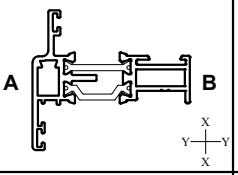	A19	309	74	9.74 / — / 3.08	2.42 / -— / 1.07	6.5	1	✓	✓	✓	✓	✓
W20026	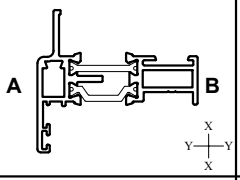	A19	302	72	9.67 / — / 2.24	3.08 / -— / 0.98	6.5	1	✓	✓	✓	✓	✓
W20027	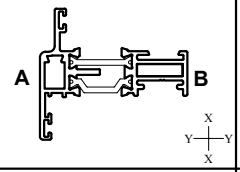	A19	321	74	10.10 / — / 3.24	2.43 / -— / 1.08	6.5	1	✓	✓	✓	✓	✓
W20028	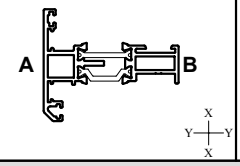	A20	340	73	12.57 / — / 3.61	3.02 / -— / 1.32	6.5	1	✓	✓	✓	✓	✓

A = Outside
B = Inside

GOZ = Gold
W = White
Z = Black

MF = Mill Finish
SA = Silver Anodised
KL = Basic Colour
HP = Special Colour
M = Dual Colour

Number	Picture	Page	Perim. mm	Mec. mm	Ix(cm4) wx(cm3)	Iy(cm4) wy(cm3)	Length	Pack pr.	MF	SA	KL	HP	M
W20029	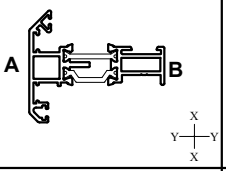	A20	348	73	12.29 —- 3.56	2.91 — 1.26	6.5	1	✓	✓	✓	✓	✓
W20032	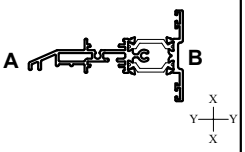	A24	456	153	25.92 —- 5.09	2.81 — 1.16	6.5	1	✓	✓	✓	✓	✓
W20034	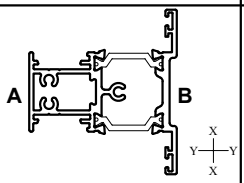	A23	392	90	14.43 —- 4.99	5.81 — 2.00	6.5	1	✓	✓	✓	✓	✓
W20035	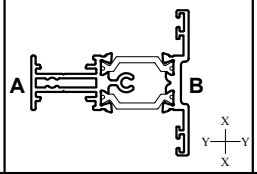	A23	351	78	10.67 —- 3.45	2.72 — 1.13	6.5	1	✓	✓	✓	✓	✓
W20037	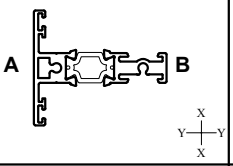	A25	263	60	7.55 —- 2.64	1.55 — 0.77	6.5	1	✓	✓	✓	✓	✓
W20038	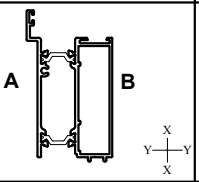	A27	453	156	12.91 —- 5.55	28.05 — 7.34	6.5	1	✓	✓	✓	✓	✓
W20039	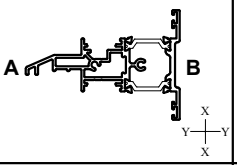	A24	479	173	28.96 —- 5.67	5.79 — 2.00	6.5	1	✓	✓	✓	✓	✓
W20047	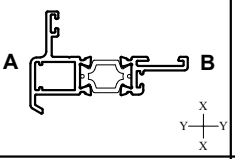	A28	237	45	5.39 —- 1.64	1.08 — 0.74	6.5	1	✓	✓	✓	✓	✓
W20048	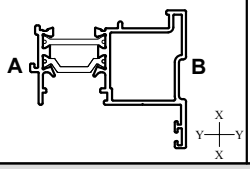	A29	310	78	11.55 —- 3.55	4.84 — 2.41	6.5	1	✓	✓	✓	✓	✓

A = Outside
B = Inside

GOZ = Gold
W = White
Z = Black

MF = Mill Finish
SA = Silver Anodised
KL = Basic Colour
HP = Special Colour
M = Dual Colour

Number	Picture	Page	Perim. mm	Mec. mm	Ix(cm4) wx(cm3)	Iy(cm4) wy(cm3)	Length	Pack pr.	MF	SA	KL	HP	M
W20051	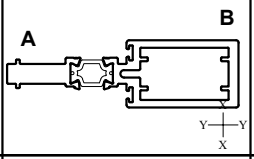	A30	296	272	53.54 — 9.88	4.77 — 3.56	6.5	1	✓	✓	✓	✓	✓
W20054	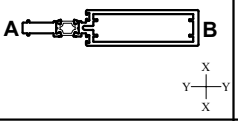	A30	376	206	146.55 — 19.89	8.24 — 6.15	6.5	1	✓	✓	✓	✓	✓
W20065	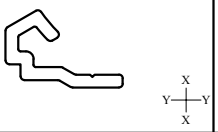	A30	57	10	- ----- -	- ----- -	5	1	✓	✓	✓	✓	
W20066	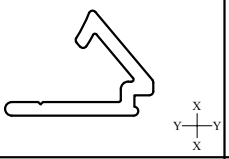	A30	74	15	- ----- -	- ----- -	5	1	✓	✓	✓	✓	
W20069	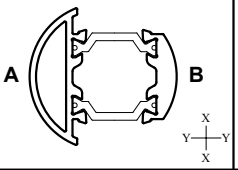	A30	192	71	5.05 ----- 2.55	2.00 ----- 1.12	5	1	✓	✓	✓	✓	✓
W20110	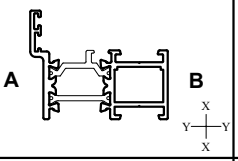	A18	297	76	10.64 — 4.01	3.05 — 1.95	6.5	1	✓	✓	✓	✓	✓
W20120	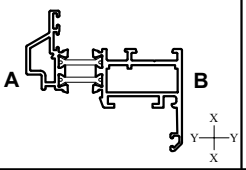	A22	367	90	16.66 — 5.00	4.47 — 1.77	6.5	1	✓	✓	✓	✓	✓
W20122	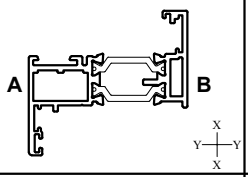	A22	310	78	12.96 ----- 4.89	3.41 ----- 1.49	6.5	1	✓	✓	✓	✓	✓
W20125	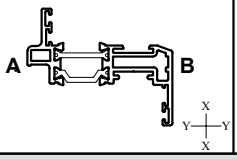	A21	321	88	14.13 ----- 4.38	2.7 ----- 1.2	6.5	1	✓	✓	✓	✓	✓

A = Outside
B = Inside

GOZ = Gold
W = White
Z = Black

MF = Mill Finish
SA = Silver Anodised
KL = Basic Colour
HP = Special Colour
M = Dual Colour

Number	Picture	Page	Perim. mm	Mec. mm	Ix(cm4) wx(cm3)	Iy(cm4) wy(cm3)	Length	Pack pr.	MF	SA	KL	HP	M
W20127	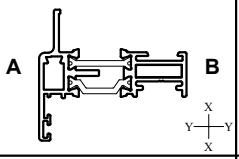	A21	307	74	12.74 / 4.68	2.27 / 1.00	6.5	1	✓	✓	✓	✓	✓
W20130	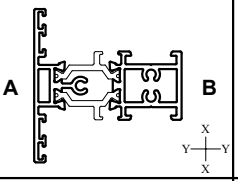	A26	378	117	14.39 / 4.89	4.30 / 1.59	6.5	1	✓	✓	✓	✓	✓
W20135	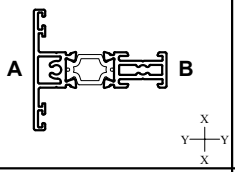	A25	270	64	7.37 / 4.12	1.82 / 0.86	6.5	1	✓	✓	✓	✓	✓
W20137	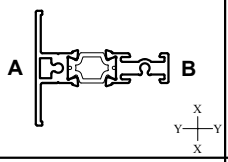	A25	238	56	7.30 / 2.61	1.26 / 0.62	6.5	1	✓	✓	✓	✓	✓
W20138	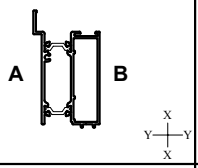	A27	434	154	12.69 / 5.36	27.16 / 7.18	6.5	1	✓	✓	✓	✓	✓
W20147	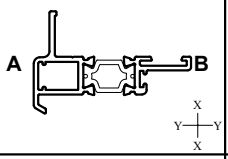	A28	224	43	5.33 / 1.64	0.96 / 0.66	6.5	1	✓	✓	✓	✓	✓
W20148	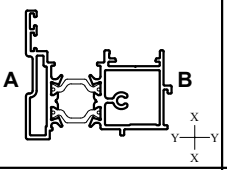	A29	341	84	13.64 / 4.29	5.56 / 2.97	6.5	1	✓	✓	✓	✓	✓
W20165N	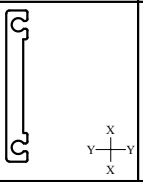	A32	68	32	- / -	- / -	4	1	✓	✓	✓	✓	
W20166	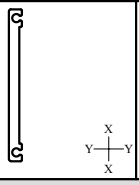	A32	100	48	- / -	- / -	4	1	✓	✓	✓	✓	

A = Outside
B = Inside

GOZ = Gold
W = White
Z = Black

MF = Mill Finish
SA = Silver Anodised
KL = Basic Colour
HP = Special Colour
M = Dual Colour

Number	Picture	Page	Perim. mm	Mec. mm	Ix(cm4) wx(cm3)	Iy(cm4) wy(cm3)	Length	Pack pr.	MF	SA	KL	HP	M
W20168	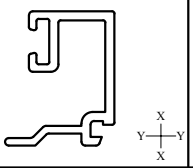	A34	110	27	- — -	- — -	5	1	✓	✓	✓	✓	
W20170	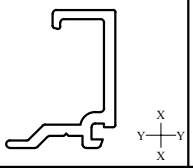	A34	83	24	- — -	- — -	4	1	✓	✓	✓	✓	
W20174	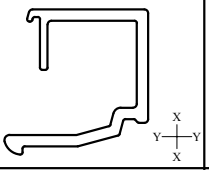	A35	112	32	- — -	- — -	6.5	1	✓	✓	✓	✓	
W20175	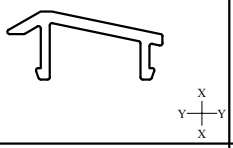	A32	69	23	- — -	- — -	4	1	✓	✓			
W20178	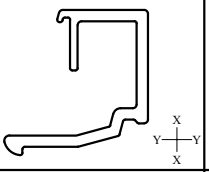	A35	104	28	- — -	- — -	6.5	1	✓	✓	✓	✓	
W20485	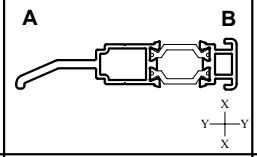	A35	259	222	21.12 — 4.67	0.76 — 0.87	6.5	1	✓	✓	✓	✓	✓
W20486	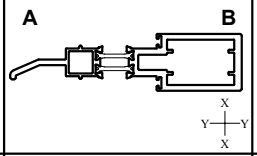	A37	374	198	94.15 — 12.25	6.57 — 4.45	6.5	1	✓	✓	✓	✓	✓
W20487	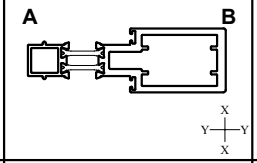	A37	312	135	50.37 — 8.96	6.47 — 4.31	6.5	1	✓	✓	✓	✓	✓
W20488	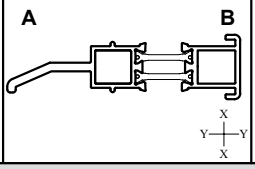	A37	272	111	22.30 — 4.84	1.01 — 0.94	6.5	1	✓	✓	✓	✓	✓

A = Outside
B = Inside

GOZ = Gold
W = White
Z = Black

MF = Mill Finish
SA = Silver Anodised
KL = Basic Colour
HP = Special Colour
M = Dual Colour

Number	Picture	Page	Perim. mm	Mec. mm	Ix(cm4) wx(cm3)	Iy(cm4) wy(cm3)	Length	Pack pr.	MF	SA	KL	HP	M
W20489	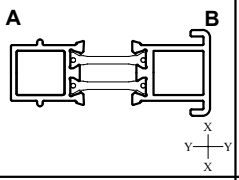	A37	209	47	8.06 — 2.81	0.92 — 0.81	6.5	1	✓	✓	✓	✓	✓
DV515	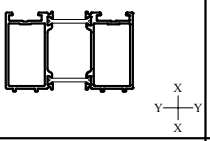	A32	356	85	27.16 ----- 7.76	14.38 ----- 6.75	6.5	1	✓	✓	✓	✓	✓
ETC047	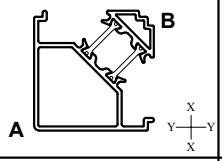	A31	347	140	42.6 — 5.9	42.6 — 5.9	6.5	1	✓	✓	✓	✓	✓
ETC048	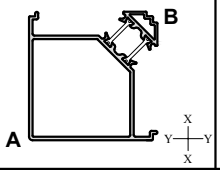	A31	347	140	42.6 ----- 5.9	42.6 ----- 5.9	6.5	1	✓	✓	✓	✓	✓
ETC080	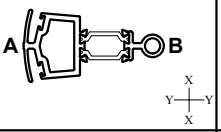	A40	334	61	25.58 ----- 5.47	4.88 ----- 2.57	6.5	1	✓	✓	✓	✓	✓
ETC081	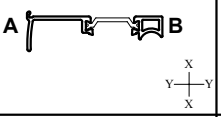	A40	197	35	13.85 ----- 3.8	0.36 ----- 0.52	6.5	1	✓	✓	✓	✓	✓
ETC082	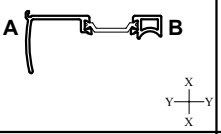	A40	221	47	16.21 ----- 4.19	1.15 ----- 1.29	6.5	1	✓	✓	✓	✓	✓
ETC083	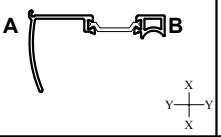	A40	243	58	17.66 ----- 4.32	2.64 ----- 2.36	6.5	1	✓	✓	✓	✓	✓
ETC364	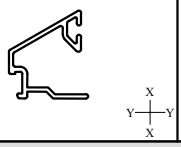	A36	122	28	- ----- -	- ----- -	6.5	1	✓	✓	✓	✓	

A = Outside
B = Inside

GOZ = Gold
W = White
Z = Black

MF = Mill Finish
SA = Silver Anodised
KL = Basic Colour
HP = Special Colour
M = Dual Colour

Number	Picture	Page	Perim. mm	Mec. mm	Ix(cm4) wx(cm3)	Iy(cm4) wy(cm3)	Length	Pack pr.	MF	SA	KL	HP	M
ETC366	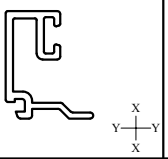	A35	106	24	- ----- -	- ----- -	6.5	1	✓	✓	✓	✓	
ETC370	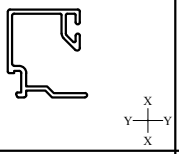	A36	141	32	- ----- -	- ----- -	6.5	1	✓	✓	✓	✓	
ETC371	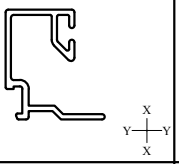	A36	133	28	- ----- -	- ----- -	6.5	1	✓	✓	✓	✓	
ETC375	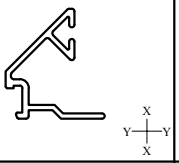	A36	112	22	- ----- -	- ----- -	6.5	1	✓	✓	✓	✓	
ETC376	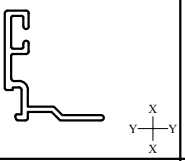	A36	100	20	- — -	- — -	6.5	1	✓	✓	✓	✓	
ETC377	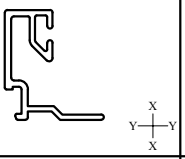	A36	124	24	- — -	- — -	6.5	1	✓	✓	✓	✓	
ETC378	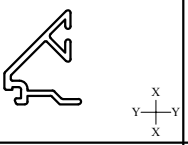	A35	96	21	- — -	- — -	6.5	1	✓	✓	✓	✓	
ETC379	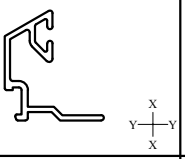	A36	112	21	- — -	- — -	6.5	1	✓	✓	✓	✓	
ETC381	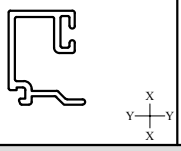	A37	113	28	- — -	- — -	6.5	1	✓	✓	✓	✓	

A = Outside
B = Inside

GOZ = Gold
W = White
Z = Black

MF = Mill Finish
SA = Silver Anodised
KL = Basic Colour
HP = Special Colour
M = Dual Colour

Number	Picture	Page	Perim. mm	Mec. mm	Ix(cm4) wx(cm3)	Iy(cm4) wy(cm3)	Length	Pack pr.	MF	SA	KL	HP	M
ETC451	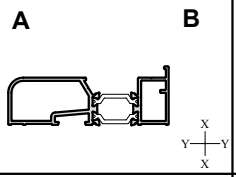	A38	**271**	**180**	32.44 / 7.29	3.46 / 2.79	**6.5m**	**1**	✓	✓	✓	✓	✓
ETC452	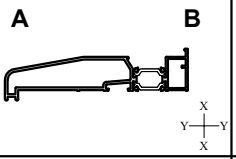	A38	**414**	**382**	122.46 / 18.03	6.01 / 3.34	**6.5m**	**1**	✓	✓	✓	✓	✓
ETC457	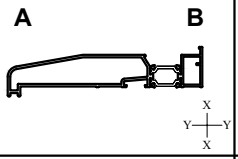	A38	**444**	**412**	163.27 / 21.60	6.79 / 3.73	**6.5m**	**1**	✓	✓	✓	✓	✓
ETC458	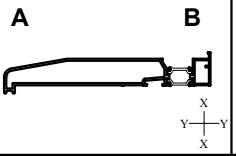	A39	**524**	**492**	313.62 / 32.63	8.87 / 4.79	**6.5m**	**1**	✓	✓	✓	✓	✓
ETC479	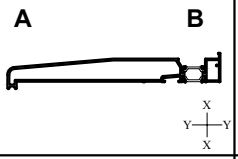	A39	**594**	**559**	501.64 / 44.04	9.72 / 5.34	**6.5m**	**1**	✓	✓	✓	✓	✓
ETD056	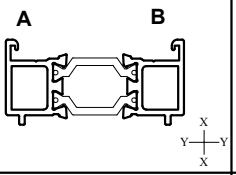	A33	204.8	172	6.31 / 2.69	0.82 / 0.77	6.5	1	✓	✓	✓	✓	✓
ETD057	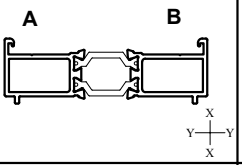	A33	250.8	217	16.30 / 4.66	1.12 / 1.07	6.5	1	✓	✓	✓	✓	✓
ETD058	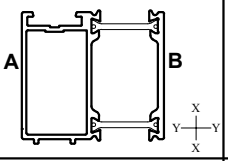	A33	294	85	9.92 / 4.22	7.25 / 3.4	6.5	1	✓	✓	✓	✓	✓
PCX41	 PVC	A32	65	-	- / -	- / -	6.5	1	✓				

A = Outside
B = Inside

GOZ = Gold
W = White
Z = Black

MF = Mill Finish
SA = Silver Anodised
KL = Basic Colour
HP = Special Colour
M = Dual Colour

Primary Visible Side - - - - - - - - - - - - - - - - - - Secondary Visible Side — · · — · · — · · — · · — · · — · · —

W20015

Outer Frame

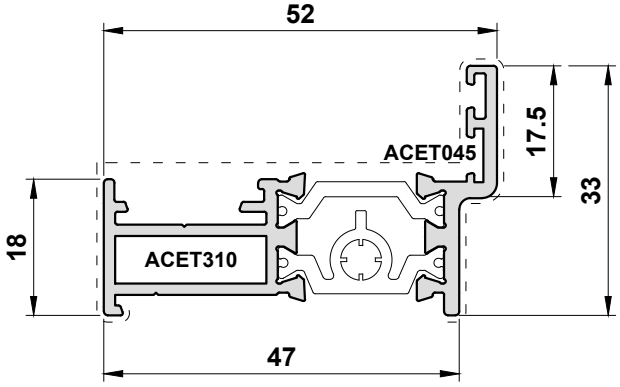

W20016

Odd Leg Outer Frame

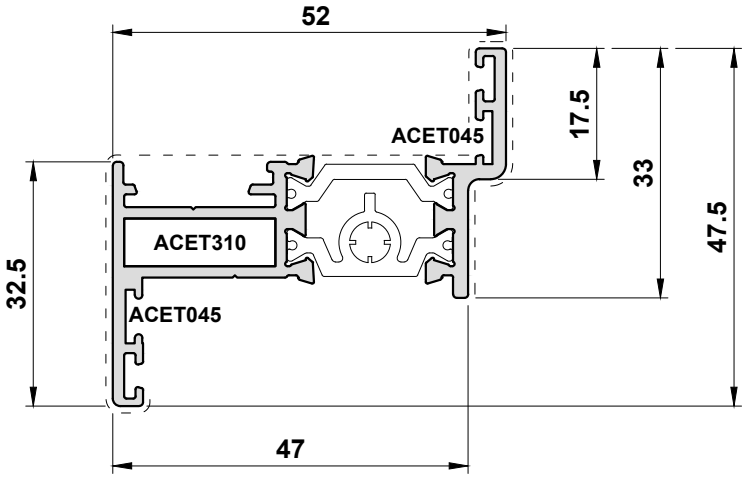

W20017

70mm Outer Frame

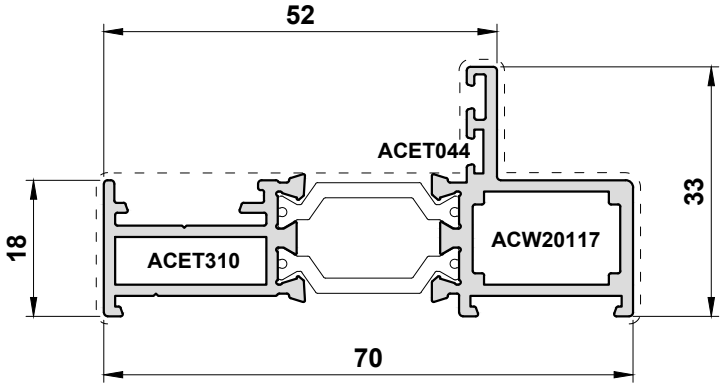

Scale 1:1

Primary Visible Side - - - - - - - - - - - - - - - - - - Secondary Visible Side — · · — · · — · · — · · — · · — · · —

W20018

Internally Beaded Fixed Light Outer Frame

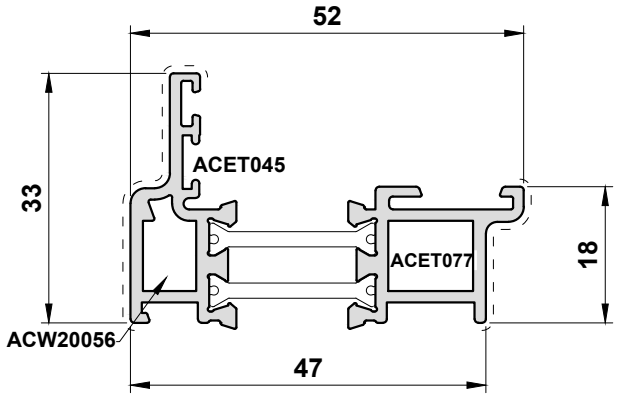

W20110

Tilt & Turn Outer Frame

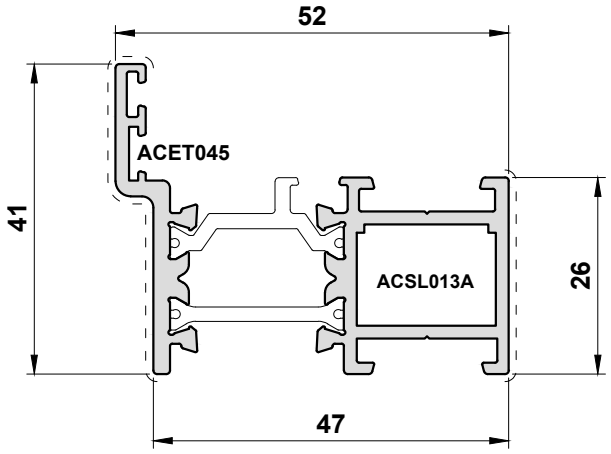

Scale 1:1

Primary Visible Side - - - - - - - - - - - - - - - - - - Secondary Visible Side — · — · — · — · — · — · —

W20024
Chamfered Vent

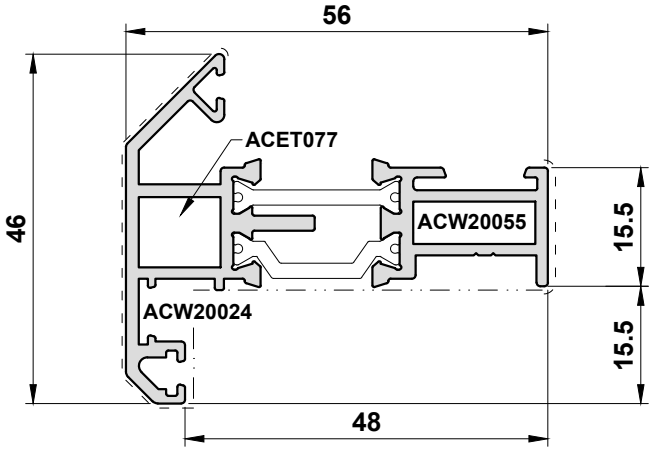

W20025
Vent

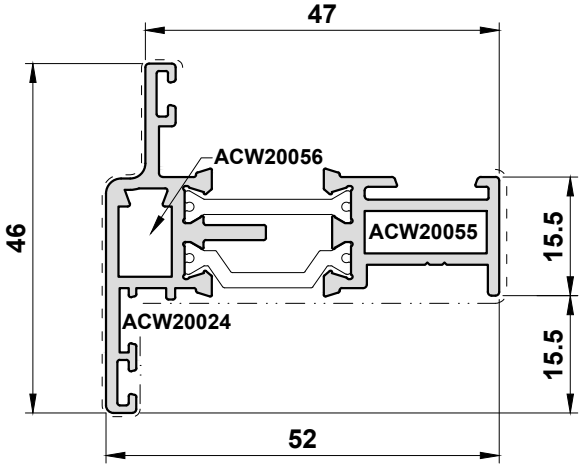

W20026
Vent - Tape Glazing

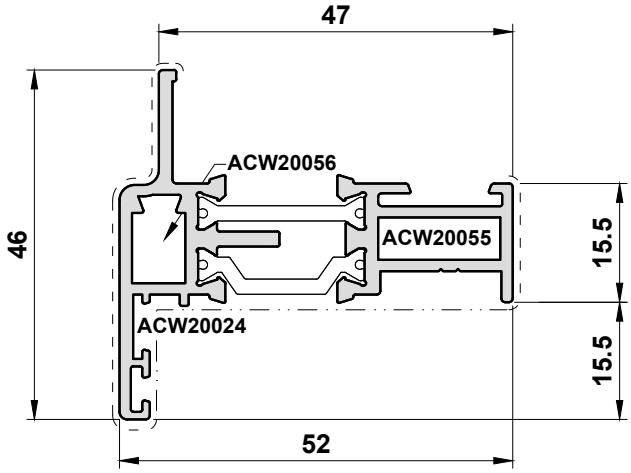

Scale 1:1

Primary Visible Side - - - - - - - - - - - - - - - - - - Secondary Visible Side — · — · — · — · — · — · — · —

W20028
Vent

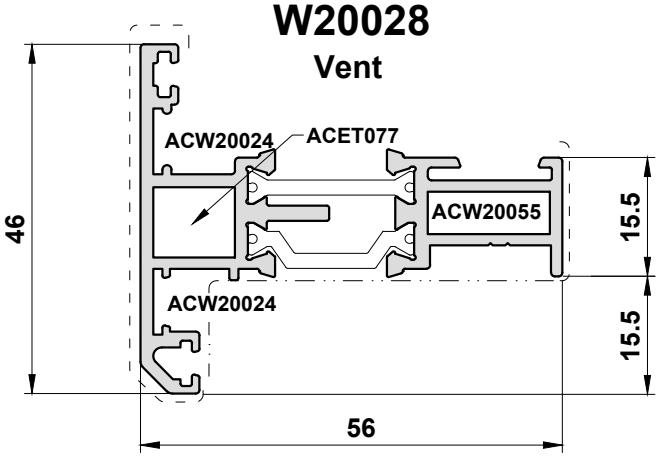

W20029
Vent

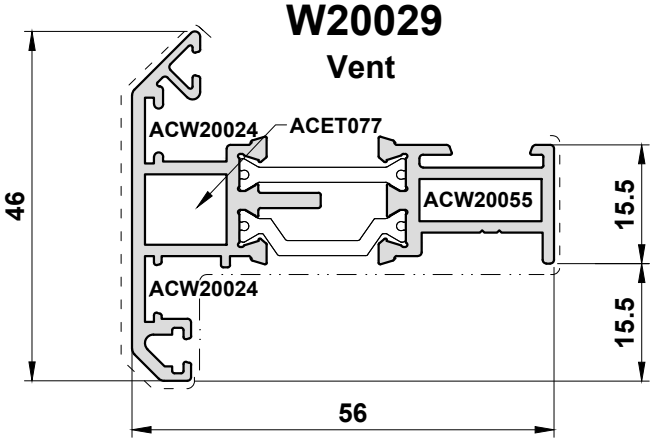

Scale 1:1

Primary Visible Side - - - - - - - - - - - - - - - - - - Secondary Visible Side — · — · — · — · — · — · — · —

W20027
Door Sash

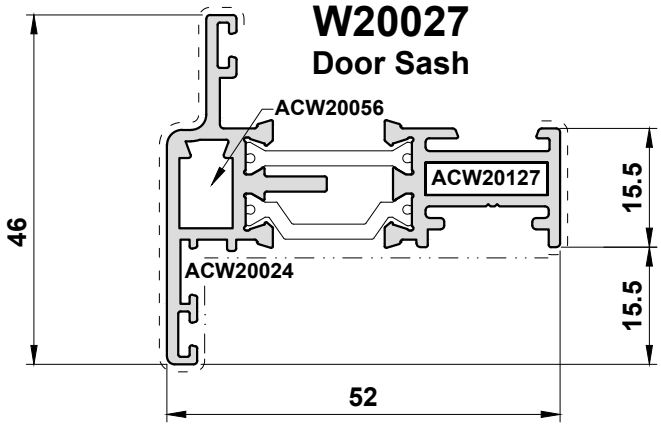

W20127
Door Sash - Tape Glazing

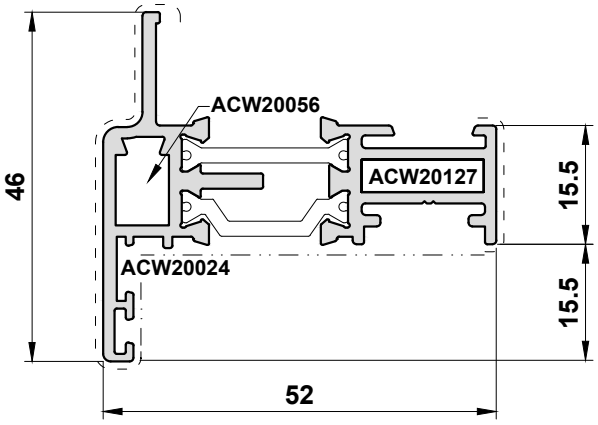

W20125
Open In Door Sash

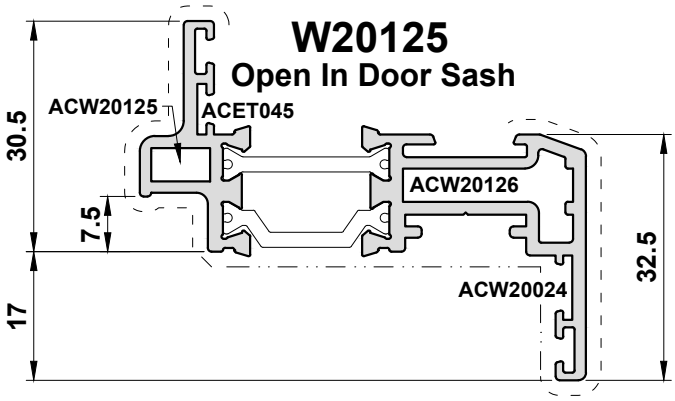

Scale 1:1

Primary Visible Side - - - - - - - - - - - - - - - - - - Secondary Visible Side — · · — · · — · · — · · — · · — · · —

W20122
Externally Beaded Sash

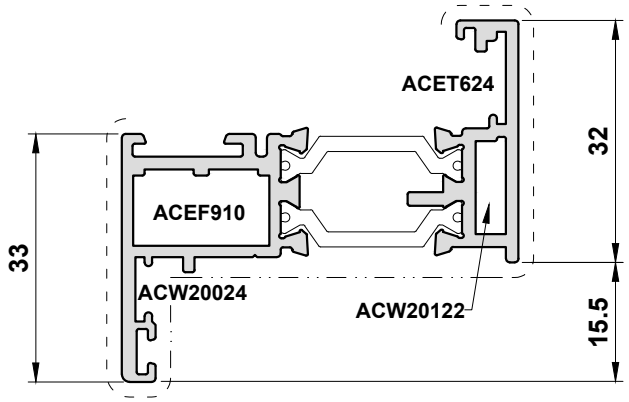

W20120
Tilt & Turn Sash

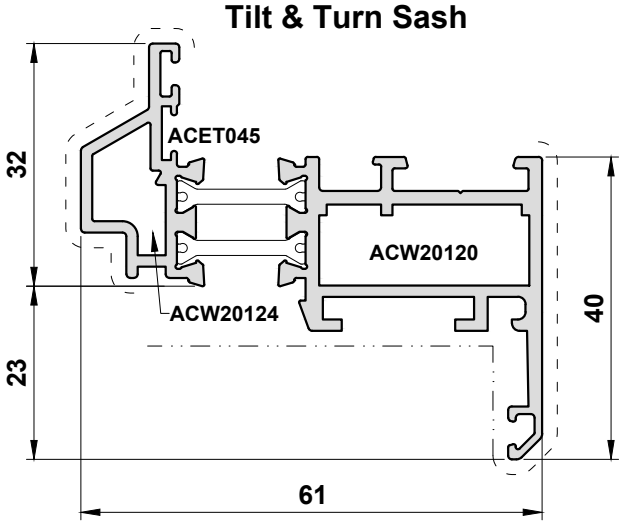

Scale 1:1

Primary Visible Side - - - - - - - - - - - - - - - - - - Secondary Visible Side — · — · — · — · — · — · — · —

W20034
Transom/Mullion

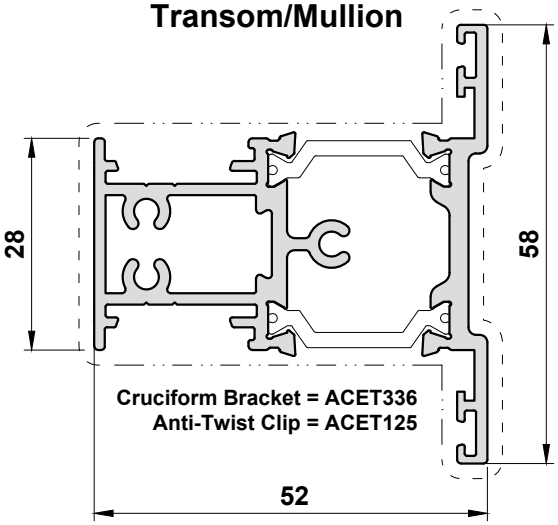

W20035
Transom/Mullion

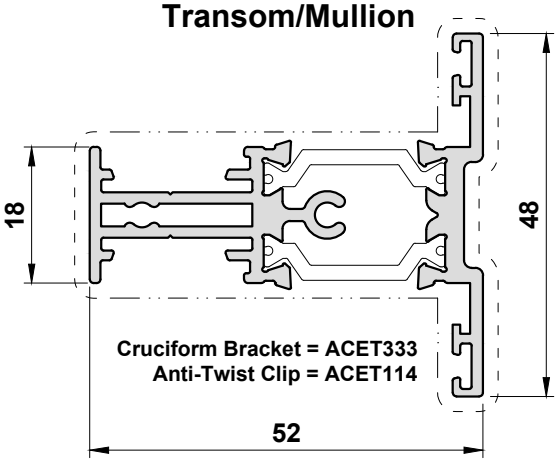

Please note W20035 is suitable for single vents & fixed lights only

Scale 1:1

Primary Visible Side - - - - - - - - - - - - - - - - - - Secondary Visible Side — · — · — · — · — · — · — · —

W20032
Narrow Transom with Drip

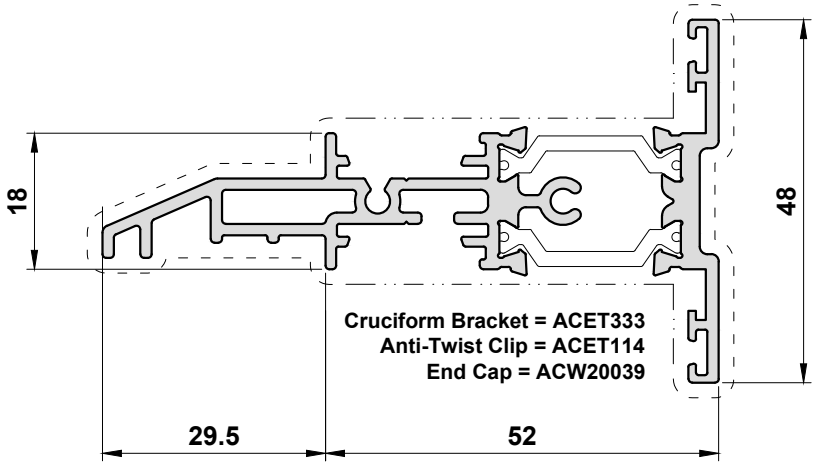

Please note W20032 is suitable for fixed lights only

W20039
Wide Transom with Drip

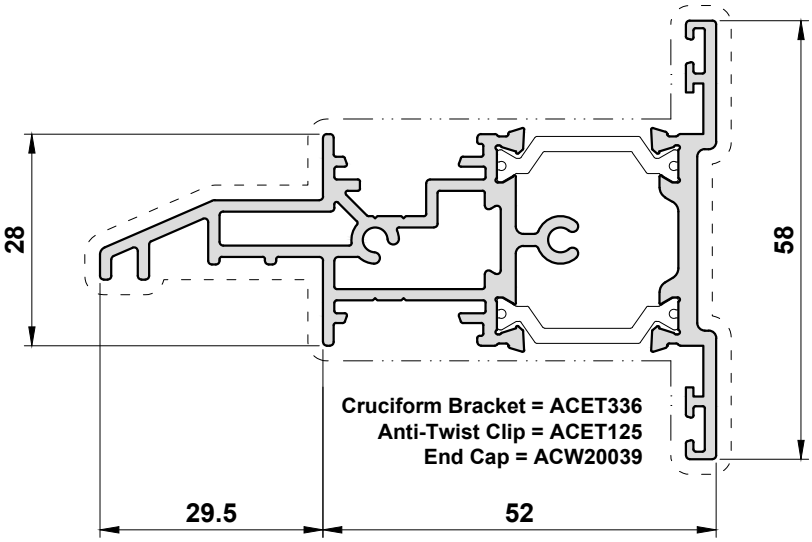

Scale 1:1

Primary Visible Side - - - - - - - - - - - - - - - - - - Secondary Visible Side — · · — · · — · · — · · — · · — · · —

W20037

Door/Dummy Transom

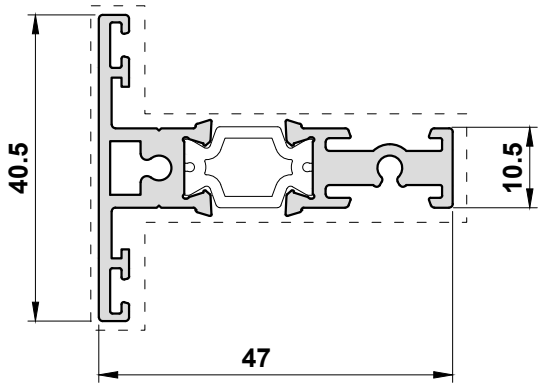

W20135

Door Transom

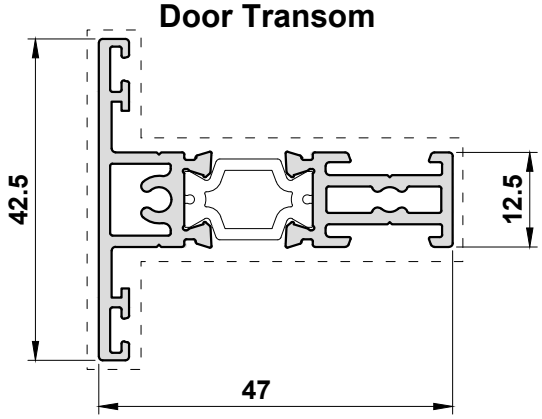

W20137

Door/Dummy Transom - Tape Glazing

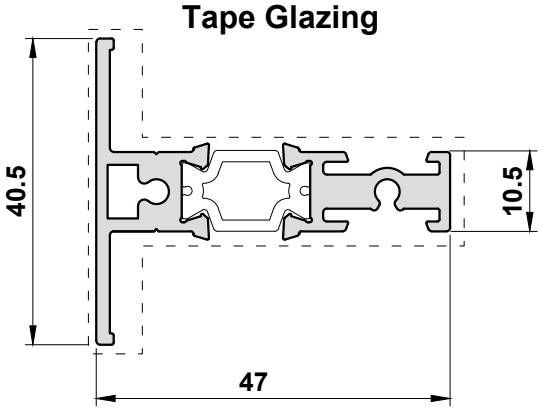

Scale 1:1

Primary Visible Side - - - - - - - - - - - - - - - - - - Secondary Visible Side — · · — · · — · · — · · — · · — · · —

W20130

Tilt & Turn Transom/Mullion

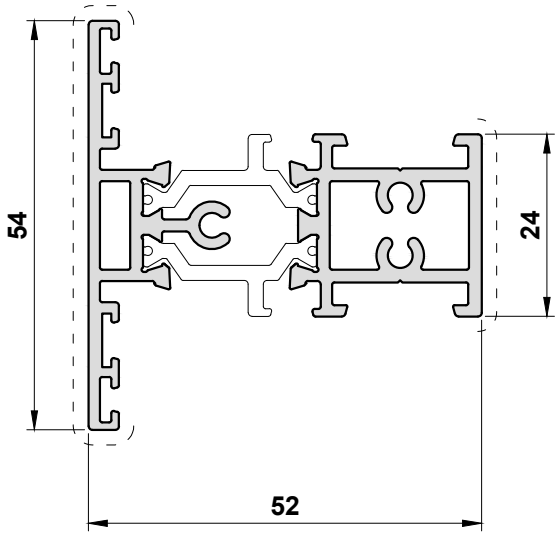

Scale 1:1

Primary Visible Side - - - - - - - - - - - - - - - - - - Secondary Visible Side — · · — · · — · · — · · — · · — · · —

W20038
Door Lock Housing

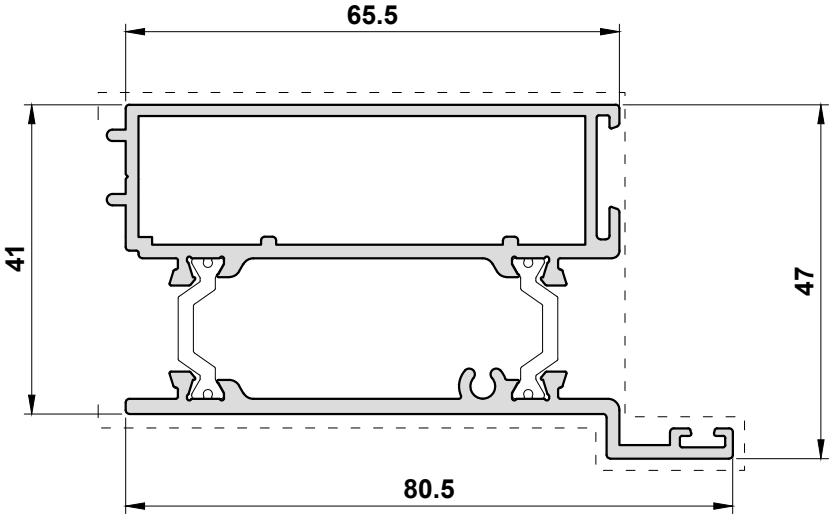

W20138
Door Lock Housing - Tape Glazing

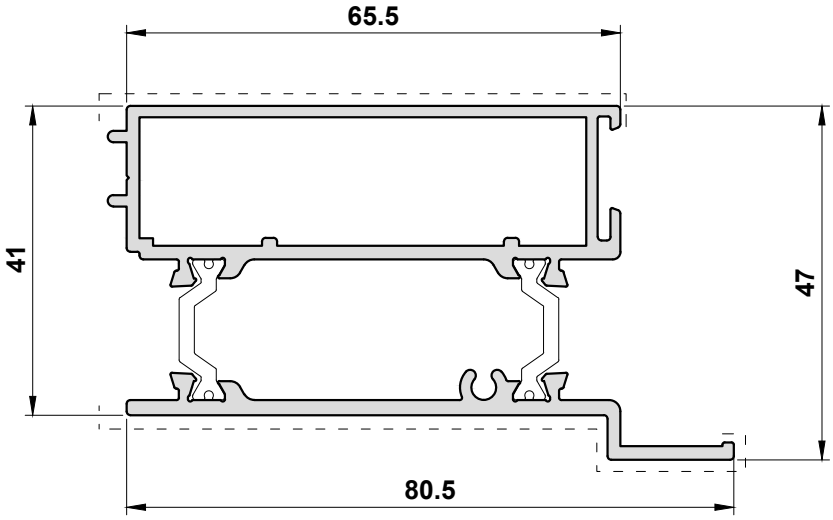

Scale 1:1

Primary Visible Side - - - - - - - - - - - - - - - - - - Secondary Visible Side — · · — · · — · · — · · — · · — · · —

W20047
Reverse Adaptor

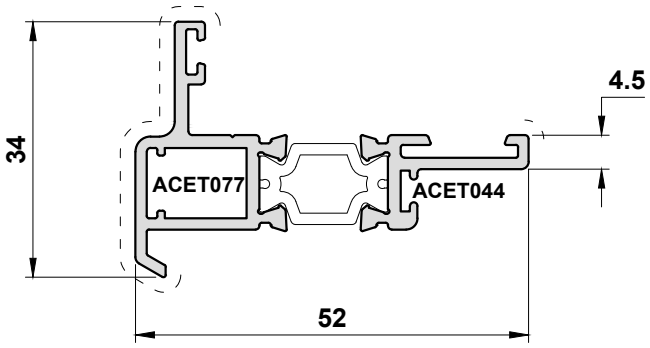

W20147
Reverse Adaptor - Tape Glazing

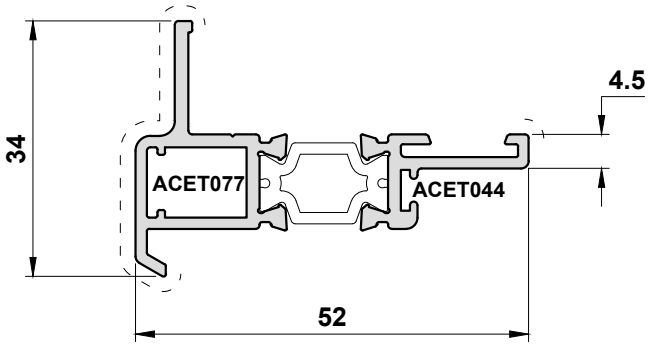

Scale 1:1

Primary Visible Side - - - - - - - - - - - - - - - - - - Secondary Visible Side — · — · — · — · — · — · — · —

W20048
Open Out Meeting Stile

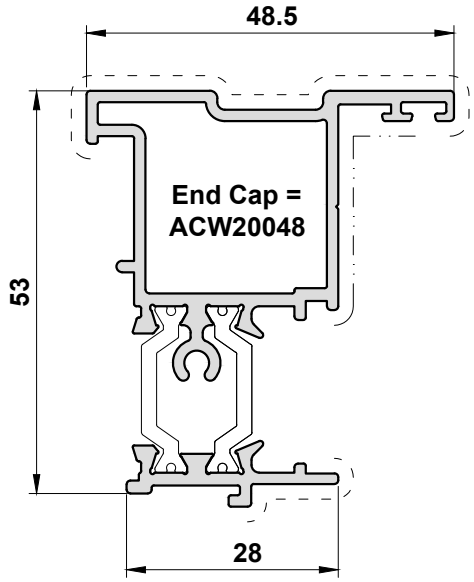

W20148
Open In Meeting Stile

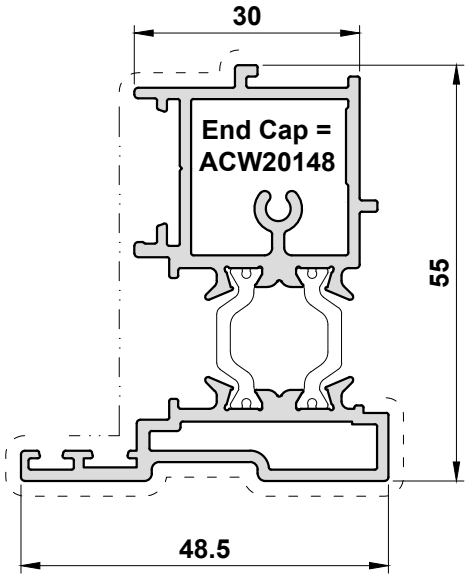

Scale 1:1

Primary Visible Side - - - - - - - - - - - - - - - - - - Secondary Visible Side — · · — · · — · · — · · — · · — · · —

W20051
W20015 Coupler / Mullion

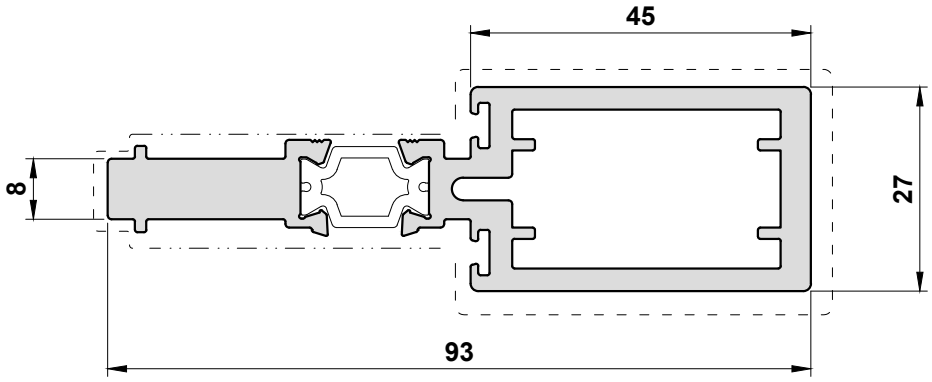

W20054
W20015 Coupler / Mullion

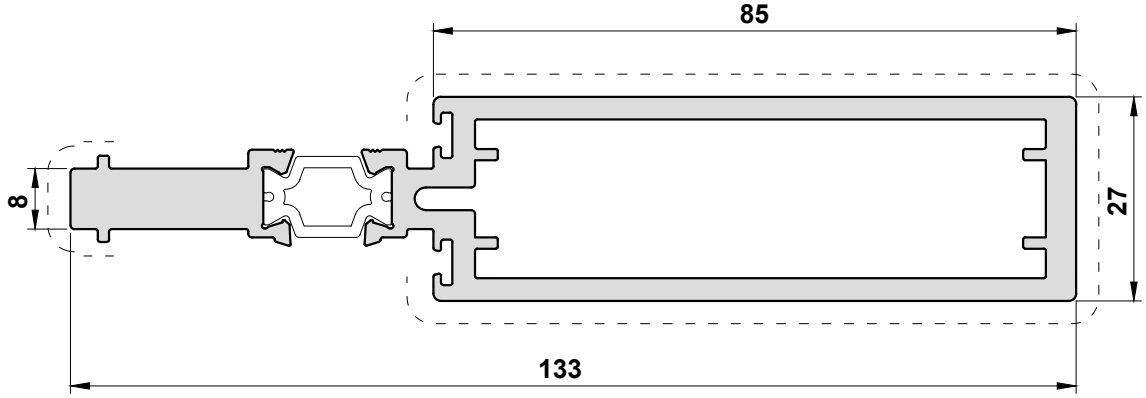

W20065
Bay Pole Adaptor

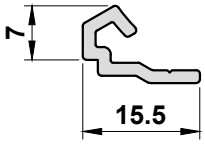

W20066
Bay Pole Adaptor

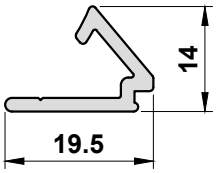

W20069
W20015 Bay Pole

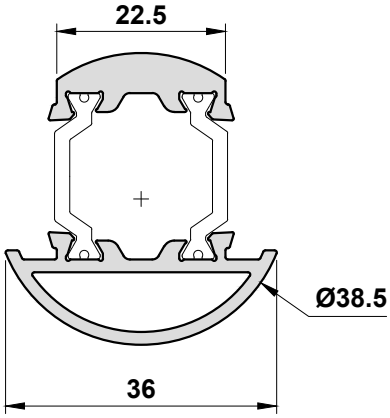

Scale 1:1

Primary Visible Side - - - - - - - - - - - - - - - - - - Secondary Visible Side — · — · — · — · — · — · — · —

ETC047

47mm 90° Corner Post
W20015 & W20110 only

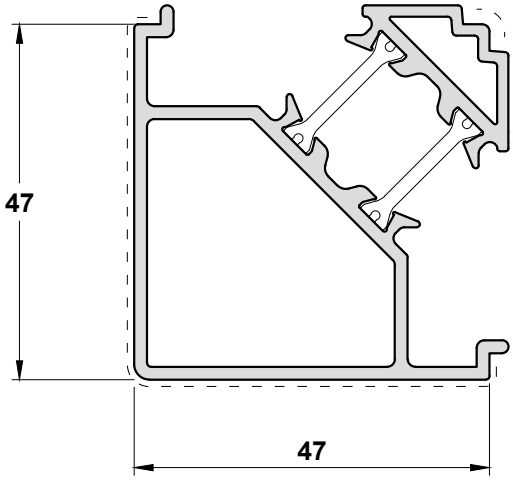

ETC048

70mm 90° Corner Post

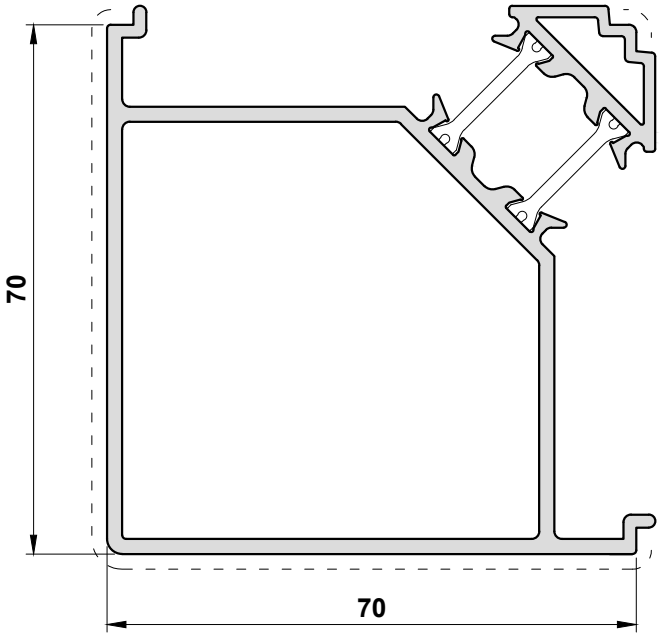

Scale 1:1

Primary Visible Side - - - - - - - - - - - - - - - - - - Secondary Visible Side — · · — · · — · · — · · — · · — · · —

W20165N
25mm Astragal Bar

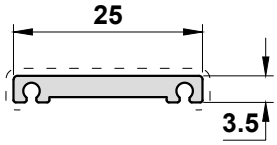

W20166
41mm Astragal Bar

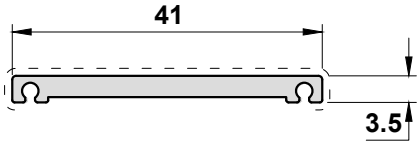

W20175
Threshold Infill

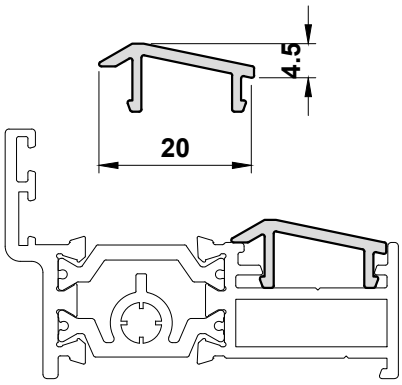

PCX41
Outer Frame Infill

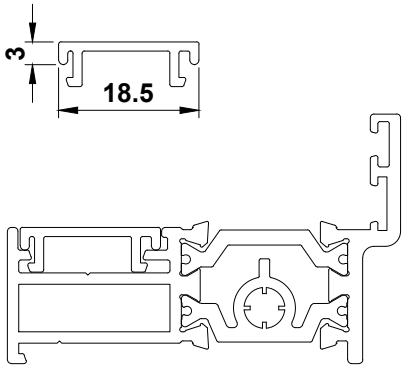

DV515
42mm Head Extension

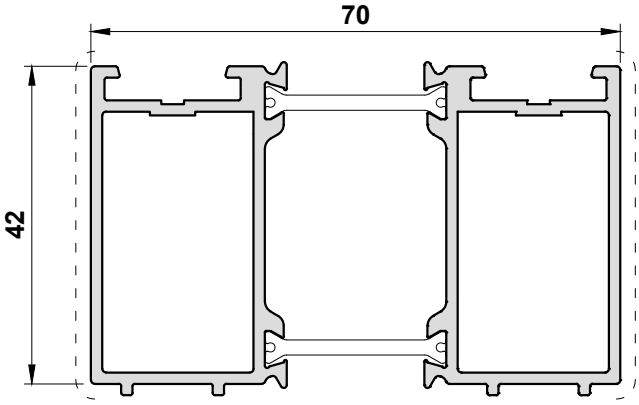

Scale 1:1

Primary Visible Side - - - - - - - - - - - - - - - - - - Secondary Visible Side — · · — · · — · · — · · — · · — · · —

ETD056
20mm Add On For 47mm sections

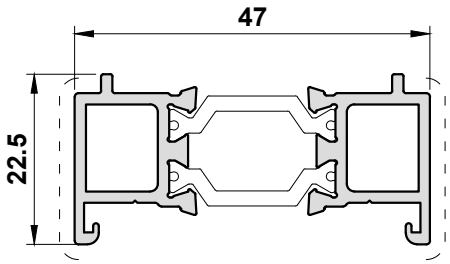

ETD057
20mm Add On For W20017

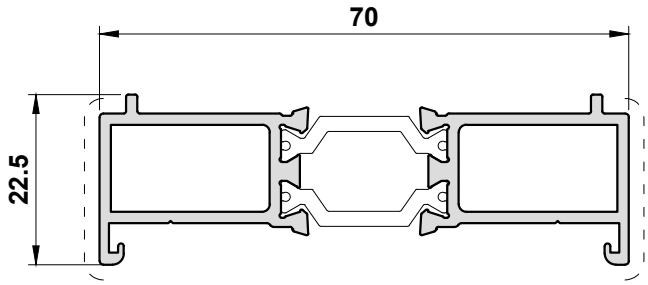

ETD058
42mm Head Extension

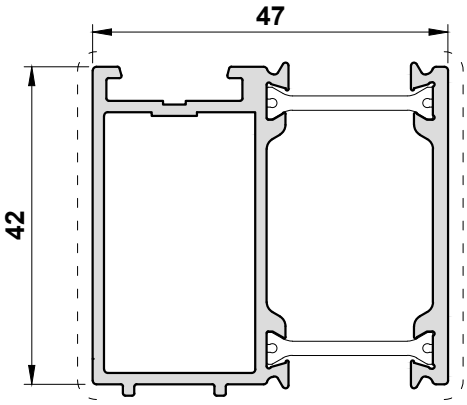

Scale 1:1

Primary Visible Side - - - - - - - - - - - - - - - - - - Secondary Visible Side — · · — · · — · · — · · — · · — · · —

W20168

Internal Square Bead

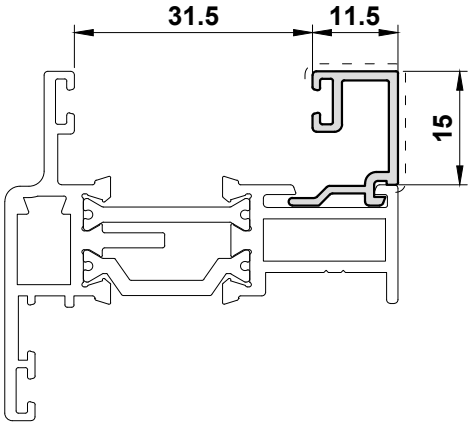

W20170

Internal Square Bead

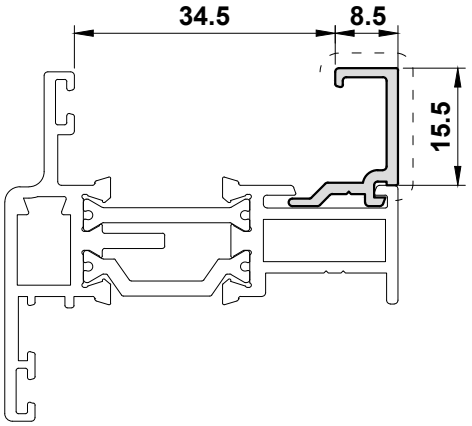

See Pages E34, E35 & E36 for full glazing details

Scale 1:1

Primary Visible Side - - - - - - - - - - - - - - - - - - Secondary Visible Side — · · — · · — · · — · · — · · — · · —

W20174
24mm Square Glazing Bead

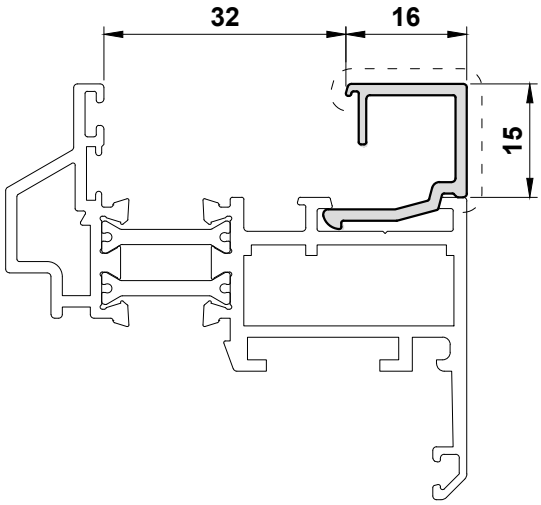

W20178
28mm Square Glazing Bead

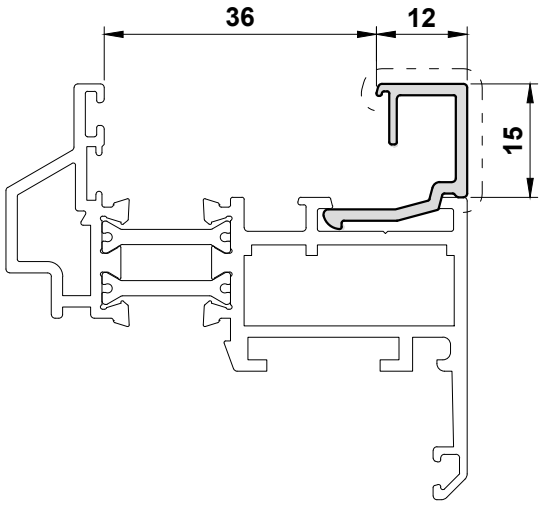

ETC378
W20122 24mm Bead

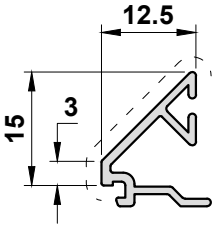

ETC381
W20122 24mm Bead

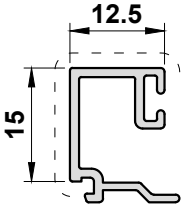

ETC366
W20122 28mm Bead

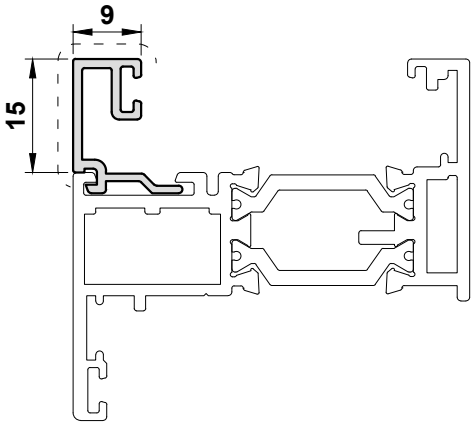

W20122

See Pages E34, E35 & E36 for full glazing details

Scale 1:1

Primary Visible Side - - - - - - - - - - - - - - - - - - Secondary Visible Side — · — · — · — · — · — · — · —

ETC364
24mm Chamfered Bead

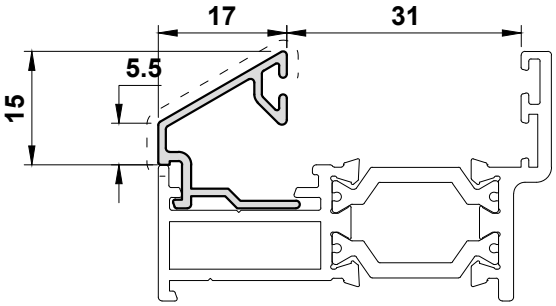

ETC375
28mm Chamfered Bead

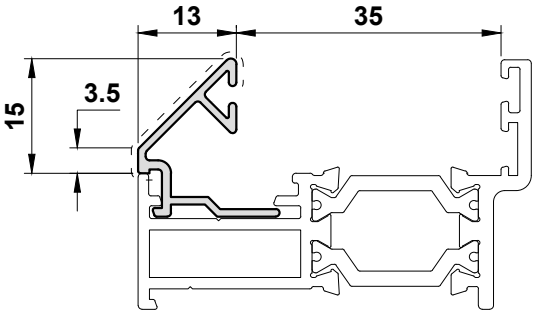

ETC370
24mm Square Bead

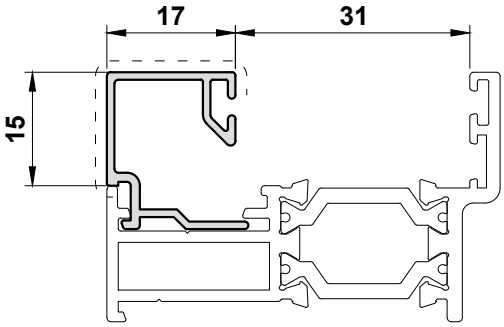

ETC377
32mm Square Bead

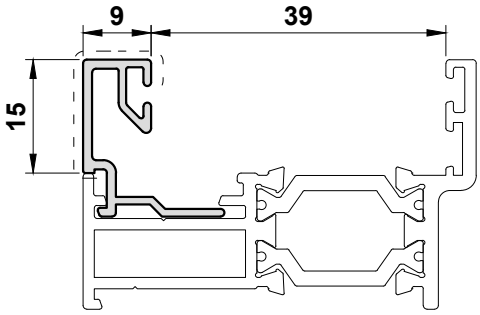

ETC371
28mm Square Bead

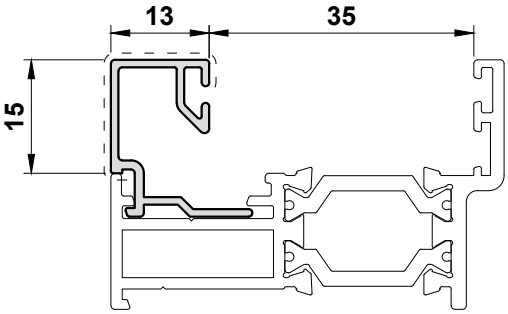

ETC379
32mm Chamfered Bead

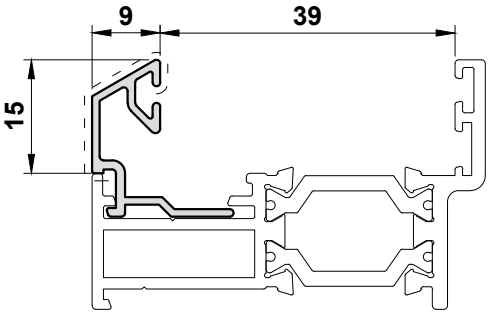

ETC376
36mm Square Bead

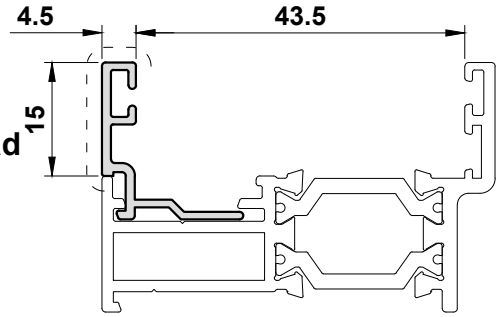

See Pages E34, E35 & E36 for full glazing details

Scale 1:1

Primary Visible Side - - - - - - - - - - - - - - - - - - Secondary Visible Side — · · — · · — · · — · · — · · — · · —

W20485
45mm Box Vertical Coupler

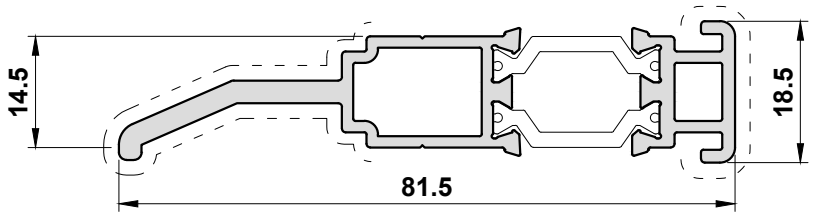

W20486
45mm Box Horizontal Coupler With Drip

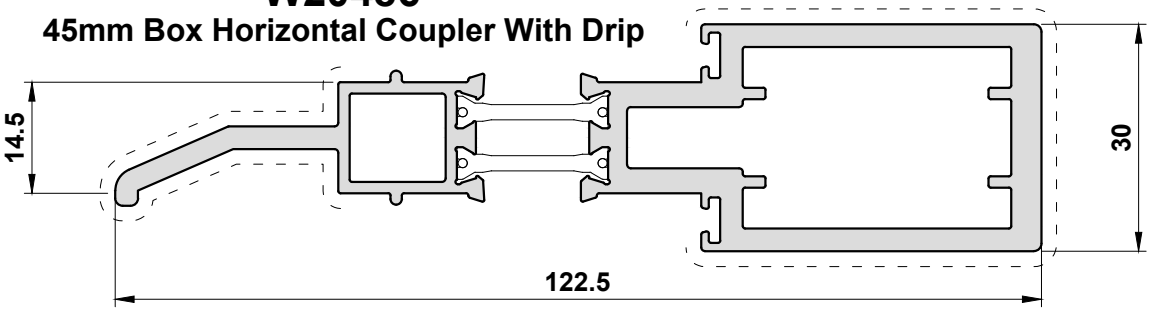

W20487
45mm Box Vertical Coupler

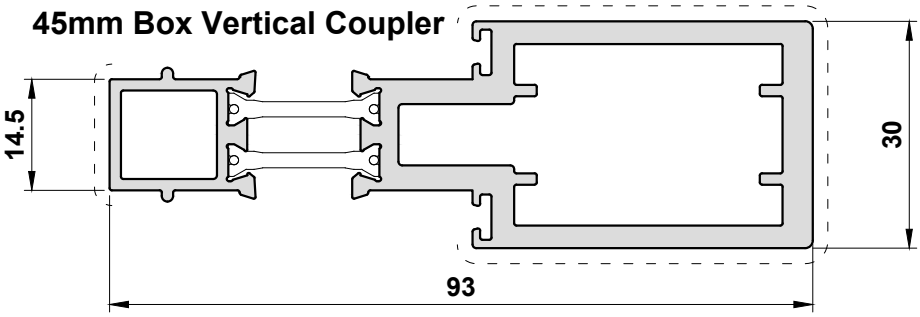

W20488
Horizontal Coupler With Drip Bar

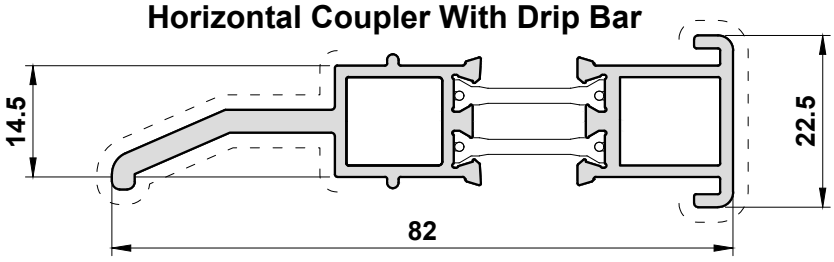

W20489
Vertical Coupler

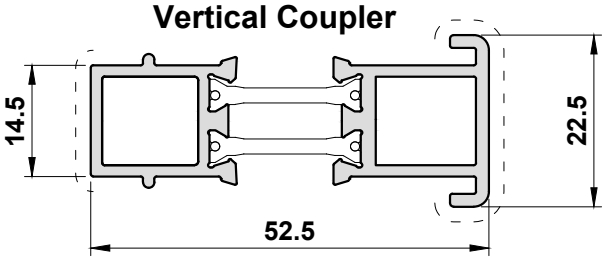

Scale 1:1

Primary Visible Side - - - - - - - - - - - - - - - - - - Secondary Visible Side — · — · — · — · — · — · — · —

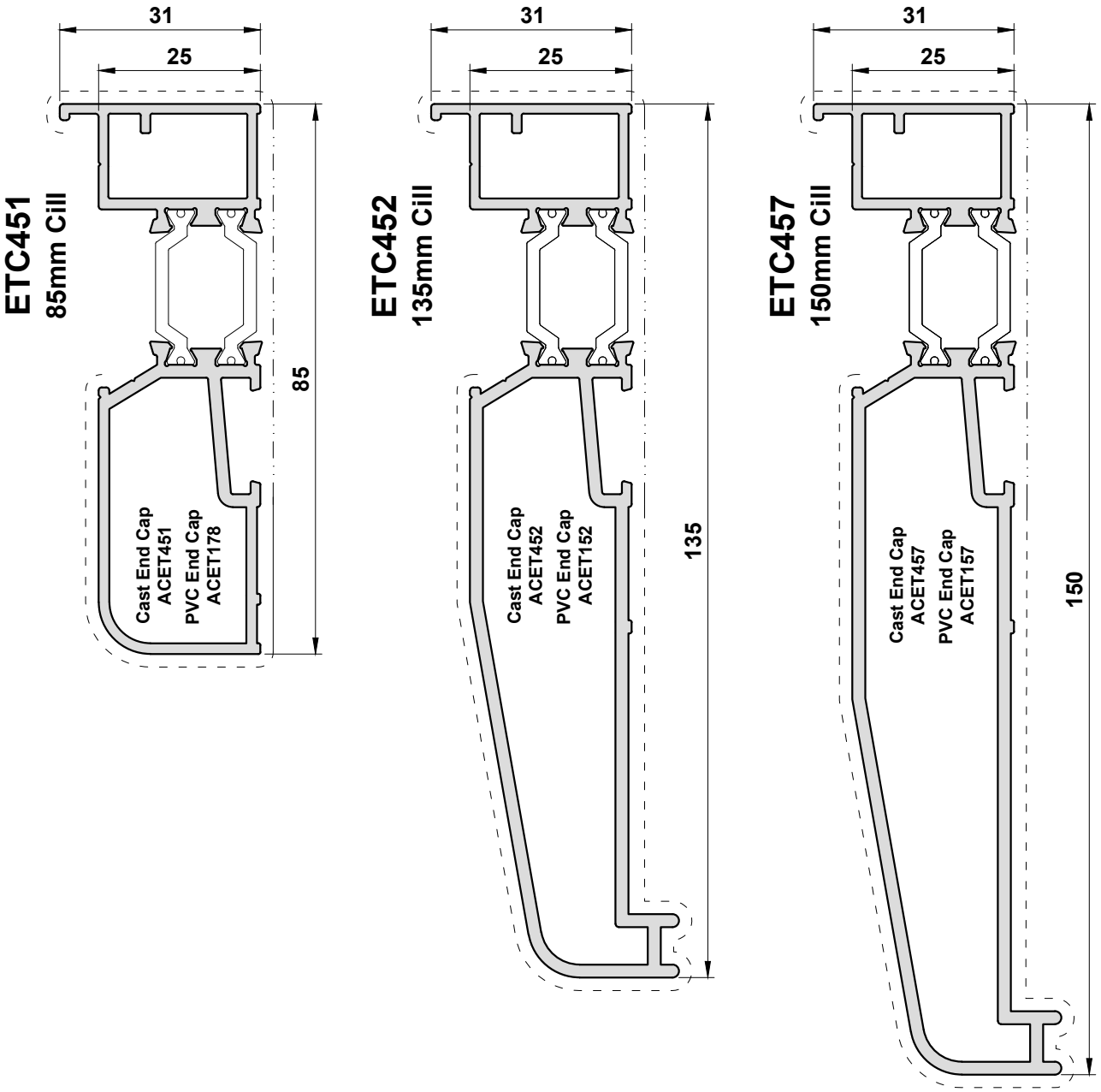

Scale 1:1

Primary Visible Side

Secondary Visible Side

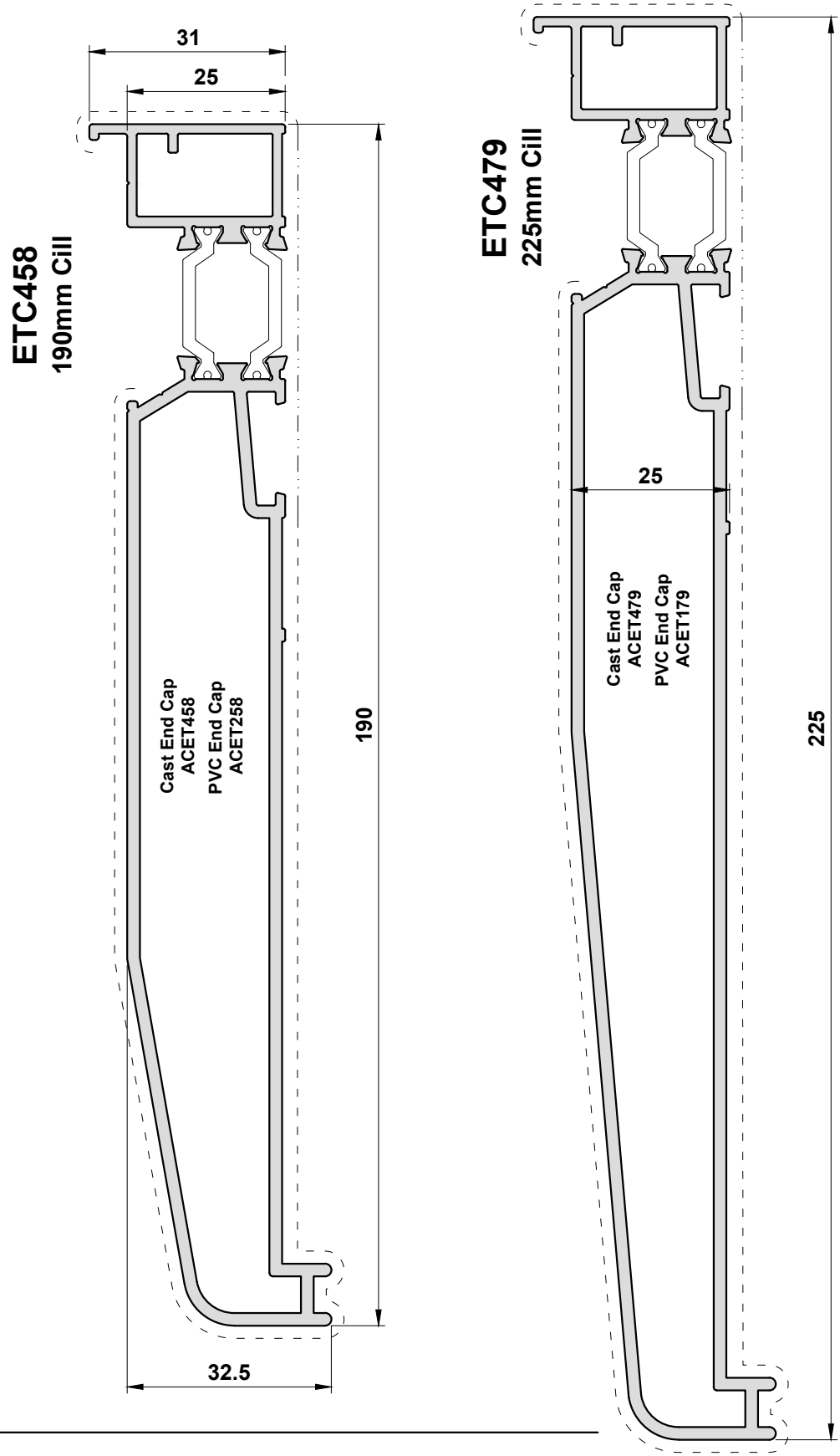

Scale 1:1

Primary Visible Side - - - - - - - - - - - - - - - - - - Secondary Visible Side — · — · — · — · — · — · — · — · —

ETC081
169° - 150°
Bay Pole Adaptor

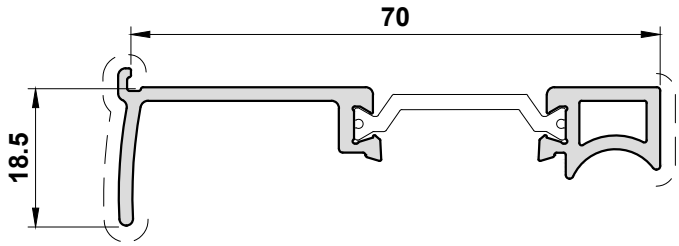

ETC080
Bay Pole

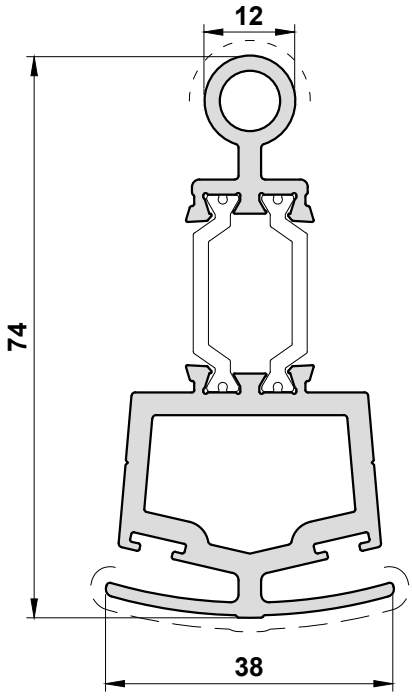

ETC082
149° - 130°
Bay Pole Adaptor

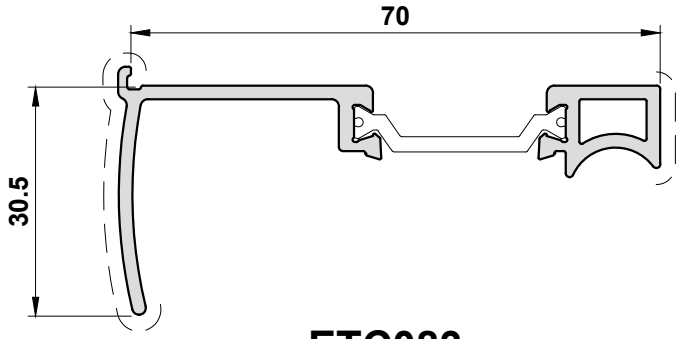

ETC083
129° - 115°
Bay Pole Adaptor

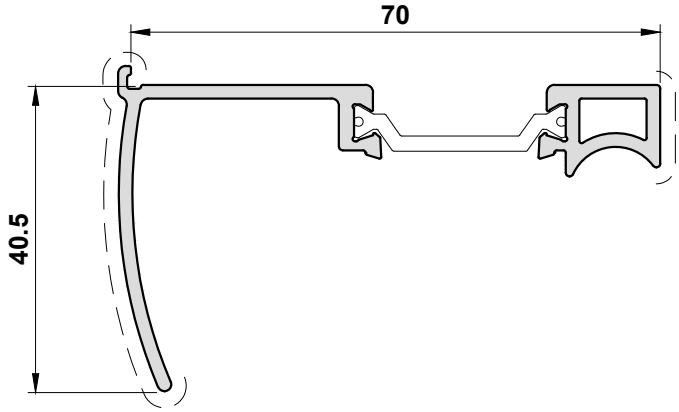

Scale 1:1

Section B

Accessories

Photos & Drawings

Image	Part Code	Pack	Unit	Application	Colour
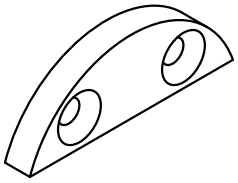	**ACET041** **Cill Nose Bracket**	**1**	**each**	**ETC451** **ETC452** **ETC457** **ETC458** **ETC479**	MF SA KL HP M GOZ W Z PC
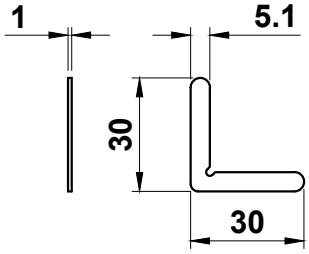	**ACET044** **Stainless Steel Chevron**	**100**	**pack**	**W20017** **W20047** **W20126** **W20047** **W20147**	MF SA KL HP M GOZ W Z PC
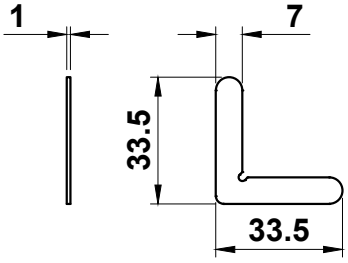	**ACET045** **Stainless Steel Chevron**	**100**	**pack**	**W20015** **W20016** **W20018** **W20110** **W20120** **W20125**	MF SA KL HP M GOZ W Z PC
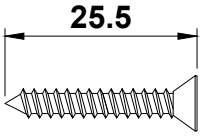	**ACET060** **No. 7 x 25 S/S Self Tapping CSK Screw**	**100**	**pack**		MF SA KL HP M GOZ W Z PC
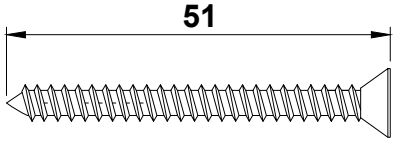	**ACET062** **No. 10 x 50 S/S Self Tapping CSK Screw**	**100**	**pack**		MF SA KL HP M GOZ W Z PC

T-BARS
ACVG65=2.5mm
ACVG66=3.0mm
ACVL150=4.0mm

Screw (Grub)

MF = Mill Finish
SA = Silver Anodised
KL = Basic Colour
HP = Special Colour
M = Dual Colour
GOZ = Gold
PC = Polished Chrome
W = White
Z = Black

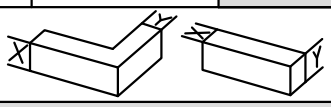

Image	Part Code	Pack	Unit	Application	Colour
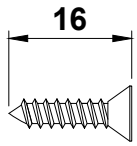	**ACET064** **No. 8 x 16 S/S Self Tapping CSK Screw**	**100**	**pack**		MF SA KL HP M GOZ W Z PC
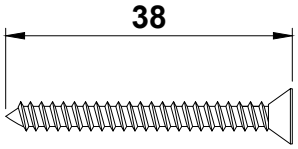	**ACET066** **No. 7 x 38 S/S Self Tapping CSK Screw**	**100**	**pack**		MF SA KL HP M GOZ W Z PC
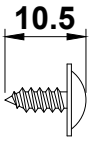	**ACET068** **No. 8 x 10 S/S Self Tapping Flange Screw**	**100**	**pack**	**Friction Hinges**	MF SA KL HP M GOZ W Z PC
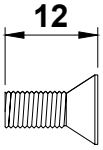	**ACET069** **M5 x 12 S/S CSK Machine Screw**	**100**	**pack**	**ACET165**	MF SA KL HP M GOZ W Z PC
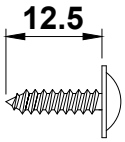	**ACET070** **No. 8 x 13 S/S Self Tapping Flange Screw**	**100**	**pack**	**Friction Hinges**	MF SA KL HP M GOZ W Z PC

T-BARS
ACVG65=2.5mm
ACVG66=3.0mm
ACVL150=4.0mm

Screw (Grub)

MF = Mill Finish
SA = Silver Anodised
KL = Basic Colour
HP = Special Colour
M = Dual Colour
GOZ = Gold
PC = Polished Chrome
W = White
Z = Black

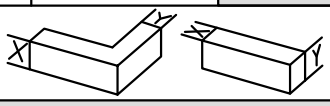

Image	Part Code	Pack	Unit	Application	Colour	
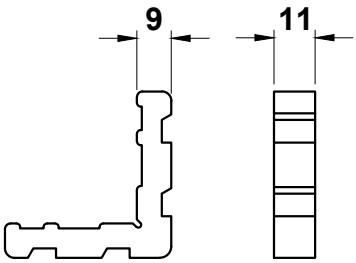	**ACET077** **Corner Cleat**	**24**	**pack**	**W20018** **W20024** **W20028** **W20029** **W20047** **W20147**	MF SA KL HP M GOZ W Z PC	
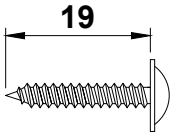	**ACET099** **No. 8 x 19 S/S Self Tapping Flange Screw**	**100**	**pack**		MF SA KL HP M GOZ W Z PC	
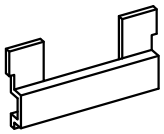	**ACET114** **Stainless Steel Anti-Twist Clip**	**100**	**pack**	**W20032** **W20035**	MF SA KL HP M GOZ W Z PC	
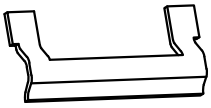	**ACET125** **Stainless Steel Anti-Twist Clip**	**100**	**pack**	**W20034** **W20039**	MF ✓ SA KL HP M GOZ W Z PC	
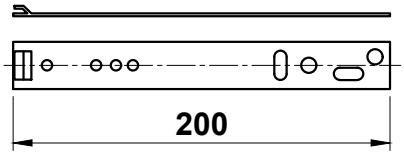	**ACET130** **Galvanised Steel Fixing Strap** **200mm x 25mm x 1.5mm**	**100**	**pack**	**W20015** **W20016** **W20017** **W20018** **W20110**	MF SA KL HP M GOZ W Z PC	

T-BARS
ACVG65=2.5mm
ACVG66=3.0mm
ACVL150=4.0mm

Screw (Grub)

MF = Mill Finish
SA = Silver Anodised
KL = Basic Colour
HP = Special Colour
M = Dual Colour
GOZ = Gold
PC = Polished Chrome
W = White
Z = Black

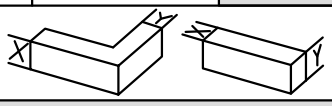

Image	Part Code	Pack	Unit	Application	Colour	
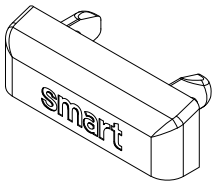	**ACET131** **Drainage Cap**	**100**	**pack**		MF	
					SA	
					KL	
					HP	
					M	
					GOZ	
					W	✓
					Z	✓
					PC	
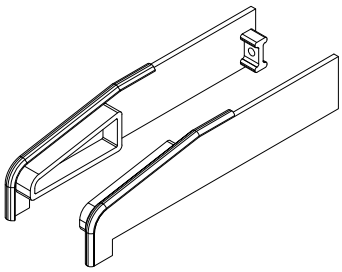	**ACET152** **PVC Cill End Caps**	**10**	**pair**	**ETC452**	MF	
					SA	
					KL	
					HP	
					M	
					GOZ	
					W	
					Z	
					PC	
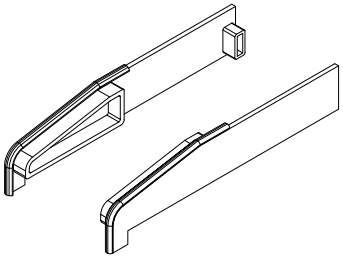	**ACET157** **PVC Cill End Caps**	**10**	**pair**	**ETC457**	MF	
					SA	
					KL	
					HP	
					M	
					GOZ	
					W	✓
					Z	✓
					PC	
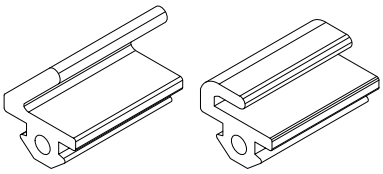 **Normal** **Compressed**	**ACET160** **EPDM Flipper Gasket**	**1**	**each**	**W20015** **W20027** **W20127**	MF	
					SA	
					KL	
					HP	
					M	
					GOZ	
					W	
					Z	
					PC	
	**ACET165** **Espagnolette Handle** **9mm Spindle**	**1**	**each**	**Reverse** **Espag** **Locking**	MF	✓
					SA	✓
					KL	
					HP	
					M	
					GOZ	
					W	✓
					Z	✓
					PC	✓

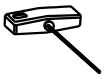

T-BARS
ACVG65=2.5mm
ACVG66=3.0mm
ACVL150=4.0mm

Screw (Grub)

MF = Mill Finish
SA = Silver Anodised
KL = Basic Colour
HP = Special Colour
M = Dual Colour
GOZ = Gold
PC = Polished Chrome
W = White
Z = Black

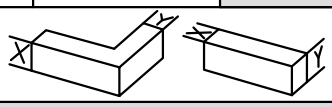

Image	Part Code	Pack	Unit	Application	Colour	
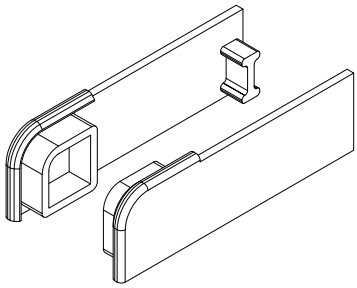	**ACET178** **PVC Cill End Caps**	**10**	**pair**	**ETC451**	MF	
					SA	
					KL	
					HP	
					M	
					GOZ	
					W	
					Z	
					PC	
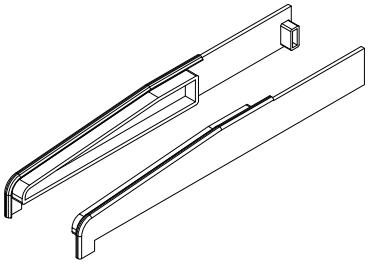	**ACET179** **PVC Cill End Caps**	**10**	**pair**	**ETC479**	MF	
					SA	
					KL	
					HP	
					M	
					GOZ	
					W	✓
					Z	✓
					PC	
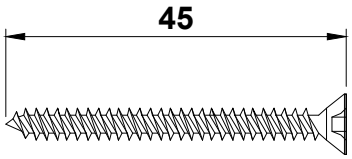	**ACET190** **4.3 x 45mm CSK Polyamide Screw**	**1000**	**Pack**		MF	
					SA	
					KL	
					HP	
					M	
					GOZ	
					W	
					Z	
					PC	
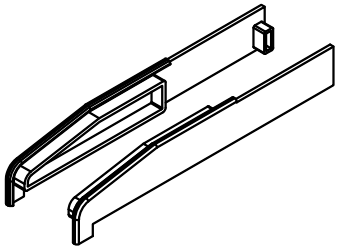	**ACET258** **PVC Cill End Cap**	**10**	**pair**	**ETC458**	MF	
					SA	
					KL	
					HP	
					M	
					GOZ	
					W	✓
					Z	✓
					PC	
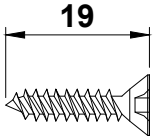	**ACET290** **4.3 x 19mm CSK Polyamide Screw**	**1000**	**Pack**		MF	
					SA	
					KL	
					HP	
					M	
					GOZ	
					W	
					Z	✓
					PC	

T-BARS
ACVG65=2.5mm
ACVG66=3.0mm
ACVL150=4.0mm

Screw (Grub)

MF = Mill Finish
SA = Silver Anodised
KL = Basic Colour
HP = Special Colour
M = Dual Colour
GOZ = Gold
PC = Polished Chrome
W = White
Z = Black

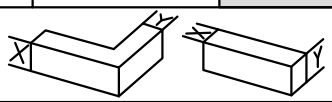

Image	Part Code	Pack	Unit	Application	Colour
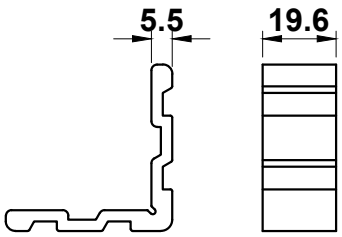	**ACET310** **Corner Cleat**	**24**	**pack**	**W20015** **W20016** **W20017**	MF ✓ SA KL HP M GOZ W Z PC
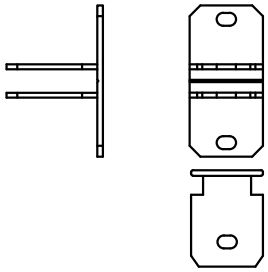	**ACET333** **Cruciform Block**	**24**	**pack**	**W20032** **W20035**	MF SA KL HP M GOZ W Z PC
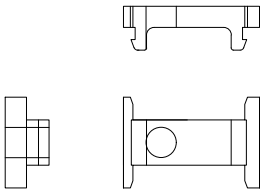	**ACET334** **Transom Locator Block**	**100**	**pack**	**W20032** **W20035**	MF SA KL HP M GOZ W Z PC
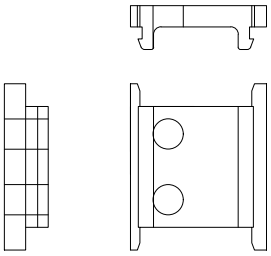	**ACET335** **Transom Locator Block**	**100**	**pack**	**W20034** **W20039**	MF SA KL HP M GOZ W Z PC
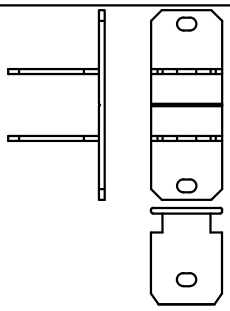	**ACET336** **Cruciform Block**	**24**	**pack**	**W20034** **W20039**	MF SA KL HP M GOZ W Z PC

T-BARS
ACVG65=2.5mm
ACVG66=3.0mm
ACVL150=4.0mm

Screw (Grub)

MF = Mill Finish
SA = Silver Anodised
KL = Basic Colour
HP = Special Colour
M = Dual Colour
GOZ = Gold
PC = Polished Chrome
W = White
Z = Black

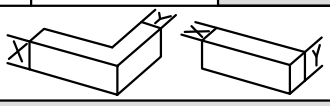

Image	Part Code	Pack	Unit	Application	Colour	
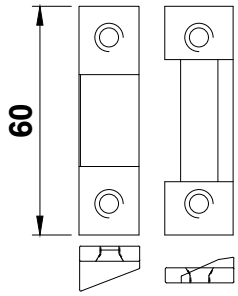	**ACET352** **Egress Hinge Pull-in Block**	**50**	**pairs**		MF	✓
					SA	
					KL	
					HP	
					M	
					GOZ	
					W	✓
					Z	✓
					PC	
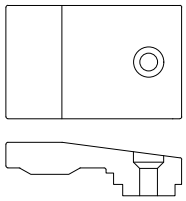	**ACET380** **Run Up Block**	**100**	**pack**		MF	
					SA	
					KL	
					HP	
					M	
					GOZ	
					W	✓
					Z	✓
					PC	
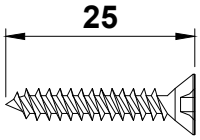	**ACET390** **4.3 x 25mm CSK Polyamide Screw**	**200**	**Pack**		MF	
					SA	
					KL	
					HP	
					M	
					GOZ	
					W	
					Z	
					PC	
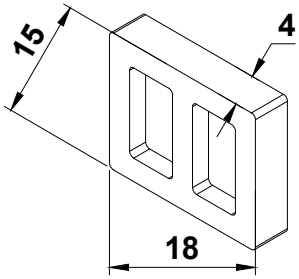	**ACET393** **Packer for W20047/W20147**	**50**	**Pack**	**W20047** **W20147**	MF	
					SA	
					KL	
					HP	
					M	
					GOZ	
					W	
					Z	✓
					PC	
	**ACET397** **8.6mm Packer**	**1**	**each**	**W20122**	MF	
					SA	
					KL	
					HP	
					M	
					GOZ	
					W	
					Z	
					PC	

T-BARS
ACVG65=2.5mm
ACVG66=3.0mm
ACVL150=4.0mm

Screw (Grub)

MF = Mill Finish
SA = Silver Anodised
KL = Basic Colour
HP = Special Colour
M = Dual Colour
GOZ = Gold
PC = Polished Chrome
W = White
Z = Black

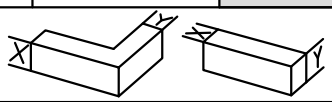

Image	Part Code	Pack	Unit	Application	Colour	
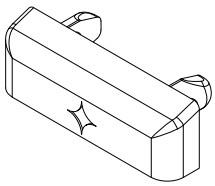	**ACET431** **Colour Match Drainage Cover Cap**	**8**	**pack**		MF	
					SA	
					KL	
					HP	
					M	
					GOZ	
					W	
					Z	
					PC	
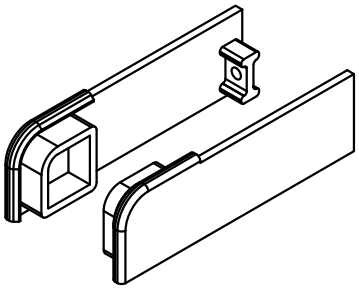	**ACET451** **Cast Cill End Caps** **(Pair)**	**1**	**pair**	**ETC451**	MF	
					SA	
					KL	
					HP	
					M	
					GOZ	
					W	
					Z	
					PC	
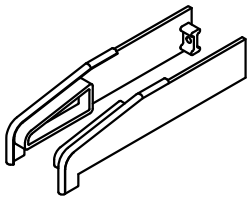	**ACET452** **Cast Cill End Caps** **(Pair)**	**1**	**Pair**	**ETC452**	MF	✓
					SA	
					KL	✓
					HP	✓
					M	
					GOZ	
					W	✓
					Z	✓
					PC	
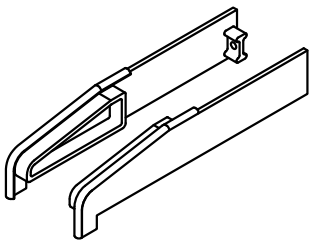	**ACET457** **Cast Cill End Caps** **(Pair)**	**1**	**Pair**	**ETC457**	MF	✓
					SA	
					KL	✓
					HP	✓
					M	
					GOZ	
					W	✓
					Z	✓
					PC	
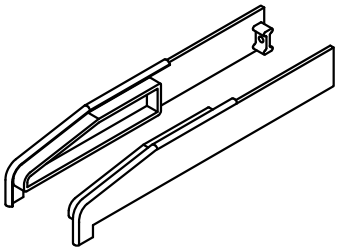	**ACET458** **Cast Cill End Caps** **(Pair)**	**1**	**Pair**	**ETC458**	MF	
					SA	
					KL	✓
					HP	✓
					M	
					GOZ	
					W	✓
					Z	✓
					PC	

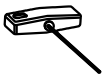

T-BARS
ACVG65=2.5mm
ACVG66=3.0mm
ACVL150=4.0mm

Screw (Grub)

MF = Mill Finish
SA = Silver Anodised
KL = Basic Colour
HP = Special Colour
M = Dual Colour
GOZ = Gold
PC = Polished Chrome
W = White
Z = Black

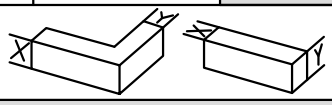

Image	Part Code	Pack	Unit	Application	Colour
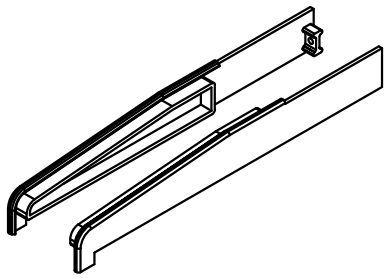	**ACET479** **Cast Cill End Caps** **(Pair)**	**1**	**Pair**	**ETC479**	MF ✓ SA KL ✓ HP ✓ M GOZ W ✓ Z ✓ PC
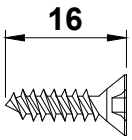	**ACET490** **4.3 x 16mm CSK Polyamide Screw**	**1000**	**Pack**		MF ✓ SA KL HP M GOZ W Z PC
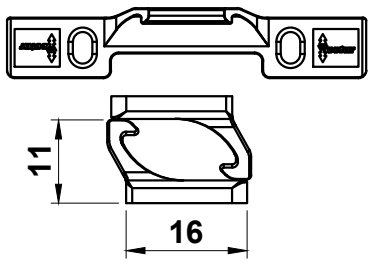	**ACET513** **13mm Cavity Security Hinge Protector** **4 Per Set (2 Pairs)**	**4**	**Sets**		MF SA KL HP M GOZ W Z PC
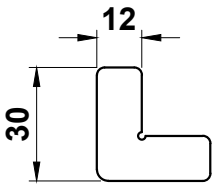	**ACET624** **Stainless Steel Chevron**	**100**	**Pack**	**W20122**	MF SA KL HP M GOZ W Z PC
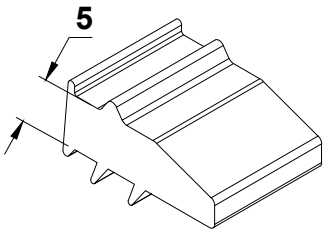	**ACET840** **5mm Low Line Internal EPDM Wedge Gasket**	**150**	**m**		MF SA KL HP M GOZ W Z ✓ PC

T-BARS
ACVG65=2.5mm
ACVG66=3.0mm
ACVL150=4.0mm

Screw (Grub)

MF = Mill Finish
SA = Silver Anodised
KL = Basic Colour
HP = Special Colour
M = Dual Colour
GOZ = Gold
PC = Polished Chrome
W = White
Z = Black

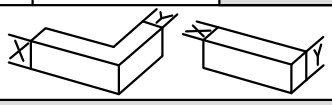

Image	Part Code	Pack	Unit	Application	Colour	
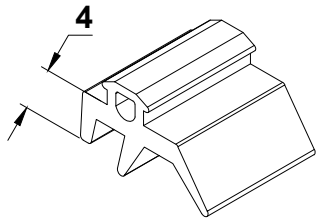	**ACET841** **4mm Low Line External EPDM Gasket**	**200**	**m**		MF SA KL HP M GOZ W Z PC	 ✓
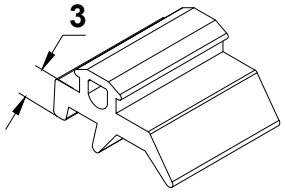	**ACET842** **3mm Low Line External Gasket**	**200**	**m**		MF SA KL HP M GOZ W Z PC	 ✓
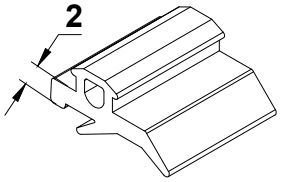	**ACET843** **2mm Low Line External Gasket**	**200**	**m**		MF SA KL HP M GOZ W Z PC	✓ ✓
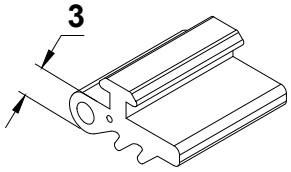	**ACET845** **3mm Low Line External EPDM Gasket with Rigid Backing** **Slides into glazing bead**	**100**	**m**		MF SA KL HP M GOZ W Z PC	 ✓
	**ACET889** **Vee Block**	**1**	**each**	**W20122**	MF SA KL HP M GOZ W Z PC	

T-BARS
ACVG65=2.5mm
ACVG66=3.0mm
ACVL150=4.0mm

Screw (Grub)

MF = Mill Finish
SA = Silver Anodised
KL = Basic Colour
HP = Special Colour
M = Dual Colour
GOZ = Gold
PC = Polished Chrome
W = White
Z = Black

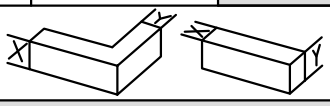

Image	Part Code	Pack	Unit	Application	Colour
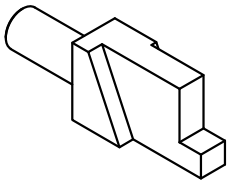	**ACET904** **Punches**	**1**	**pair**	**W20015** **W20016**	MF SA KL HP M GOZ W Z PC
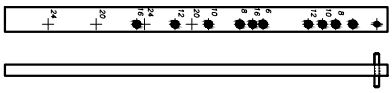	**ACET911** **Friction Hinge Drill Jig**	**1**	**each**	**W20024** **W20025** **W20026** **W20027** **W20028** **W20029**	MF SA KL HP M GOZ W Z PC
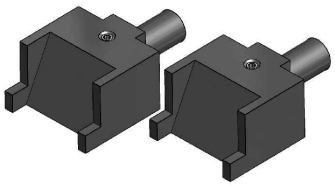	**ACET918** **Punches**	**1**	**pair**	**W20018**	MF SA KL HP M GOZ W Z PC
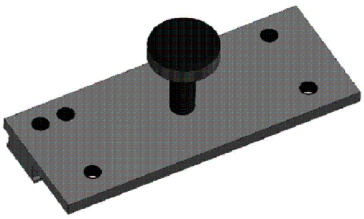	**ACET945** **Transom/Mullion Drill Jig**	**1**	**each**		MF SA KL HP M GOZ W Z PC
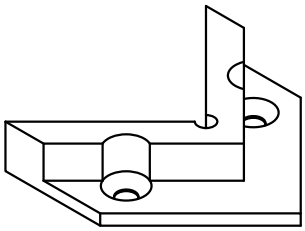	**ACET975** **4mm Tufnel Packer**	**1**	**each**	**W20026** **W20027** **W20028** **W20029**	MF ✓ SA KL HP M GOZ W Z PC

T-BARS
ACVG65=2.5mm
ACVG66=3.0mm
ACVL150=4.0mm

Screw (Grub)

MF = Mill Finish
SA = Silver Anodised
KL = Basic Colour
HP = Special Colour
M = Dual Colour
GOZ = Gold
PC = Polished Chrome
W = White
Z = Black

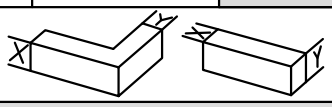

Image	Part Code	Pack	Unit	Application	Colour
	ACET978 **Punches**	**1**	**pair**	**W20017**	MF SA KL HP M GOZ W Z PC
	ACET979N **Vee Block**	**1**	**each**	**W20017**	MF SA KL HP M GOZ W Z PC
6	**ACET977** **6mm Packer**	**1**	**each**	**W20028** **W20029** **W20147**	MF SA KL HP M GOZ W Z PC
	ACET981 **Punches**	**1**	**pair**	**W20047** **W20147**	MF SA KL HP M GOZ W Z PC
	ACET982 **Vee Block**	**1**	**each**	**W20015** **W20016**	MF SA KL HP M GOZ W Z PC

T-BARS
ACVG65=2.5mm
ACVG66=3.0mm
ACVL150=4.0mm

Screw (Grub)

MF = Mill Finish
SA = Silver Anodised
KL = Basic Colour
HP = Special Colour
M = Dual Colour
GOZ = Gold
PC = Polished Chrome
W = White
Z = Black

Image	Part Code	Pack	Unit	Application	Colour	
	ACETME13 **13.5mm Egress Hinge**	**1**	**pair**	**ACETME13**	MF	
					SA	
					KL	
					HP	
					M	
					GOZ	
					W	
					Z	
					PC	
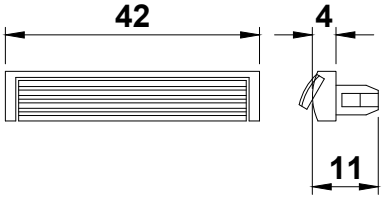	**ACGSL045** **Drainage Cap**	**100**	**pack**		MF	
					SA	
					KL	
					HP	
					M	
					GOZ	
					W	✓
					Z	✓
					PC	
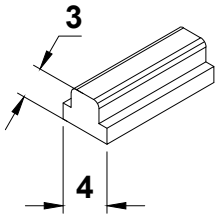	**ACRV032** **Sealing Gasket for Coupler**	**50**	**m**	**W20016**	MF	
					SA	
					KL	
					HP	
					M	
					GOZ	
					W	
					Z	
					PC	
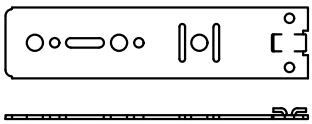	**ACUN23X** **Screw Fixing Lug** **ACUN230: B = 160MM** **ACUN232: B = 240MM** **ACUN233: B = 280MM**	**100**	**Pack**	**ETC451** **ETC452** **ETC457** **ETC458** **ETC478** **ETC479** **W20110**	MF	
					SA	
					KL	
					HP	
					M	
					GOZ	
					W	
					Z	
					PC	
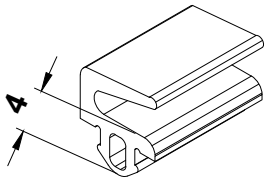	**ACVL031** **EPDM Flipper Gasket**	**100**	**m**	**W20120**	MF	
					SA	
					KL	
					HP	
					M	
					GOZ	
					W	
					Z	
					PC	

T-BARS
ACVG65=2.5mm
ACVG66=3.0mm
ACVL150=4.0mm

Screw (Grub)

MF = Mill Finish
SA = Silver Anodised
KL = Basic Colour
HP = Special Colour
M = Dual Colour
GOZ = Gold
PC = Polished Chrome
W = White
Z = Black

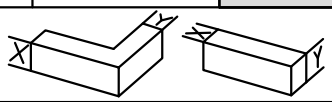

Image	Part Code	Pack	Unit	Application	Colour	
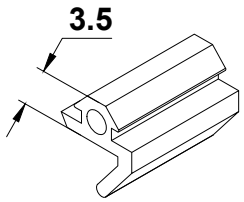	**ACVL032** **EPDM Flipper Gasket**	**100**	**m**		MF SA KL HP M GOZ W Z PC	
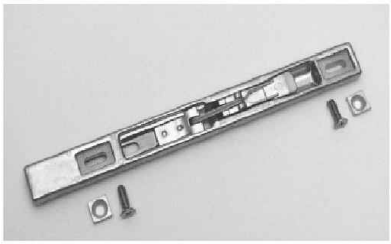	**ACVL432** **Shoot Bolt**	**1**	**each**	**W20048** **ACW20432**	MF SA KL HP M GOZ W Z PC	
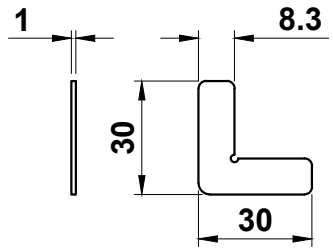	**ACW20024** **Stainless Steel Chevron**	**100**	**pack**	**W20024** **W20025** **W20026** **W20027** **W20028** **W20029** **W20122** **W20125** **W20126** **W20127**	MF SA KL HP M GOZ W Z PC	
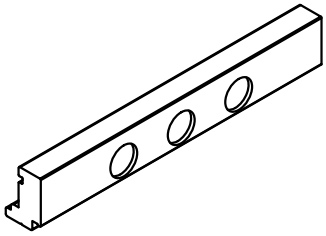	**ACW20028** **Handle Fixing Block for use with W20168 bead only**	**1**	**each**	**W20168**	MF SA KL HP M GOZ W Z PC	✓ ✓ ✓ ✓
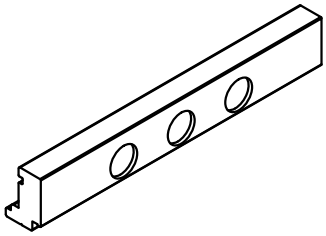	**ACW20029** **Handle Fixing Block for use with W20170 bead only**	**1**	**each**	**W20170**	MF SA KL HP M GOZ W Z PC	✓ ✓ ✓ ✓

T-BARS
ACVG65=2.5mm
ACVG66=3.0mm
ACVL150=4.0mm

Screw (Grub)

MF = Mill Finish
SA = Silver Anodised
KL = Basic Colour
HP = Special Colour
M = Dual Colour
GOZ = Gold
PC = Polished Chrome
W = White
Z = Black

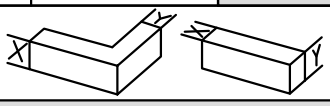

Image	Part Code	Pack	Unit	Application	Colour	
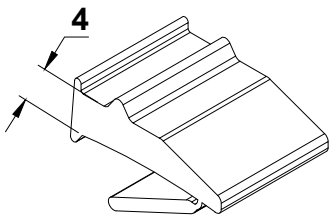	**ACW20038** **4-3mm Tear-away Low-line EPDM Wedge Gasket** **Black Only**	**200**	**m**		MF	
					SA	
					KL	
					HP	
					M	
					GOZ	
					W	
					Z	✓
					PC	
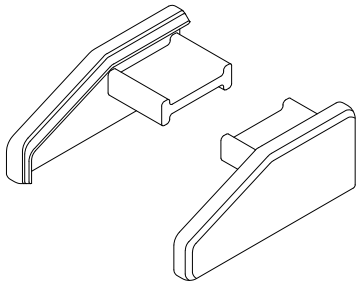	**ACW20039** **Transom End Caps**	**10**	**pack**	**W20032** **W20039**	MF	
					SA	
					KL	
					HP	
					M	
					GOZ	
					W	✓
					Z	✓
					PC	
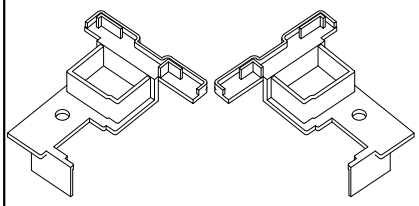	**ACW20048** **End Cap W20048**	**10**	**pairs**	**W20048**	MF	
					SA	
					KL	
					HP	
					M	
					GOZ	
					W	✓
					Z	✓
					PC	
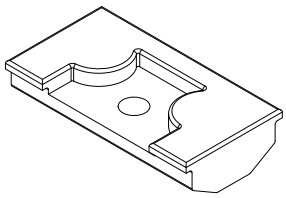	**ACW20049** **Keep Packer**	**50**	**pack**	**W20048**	MF	
					SA	
					KL	
					HP	
					M	
					GOZ	
					W	
					Z	
					PC	
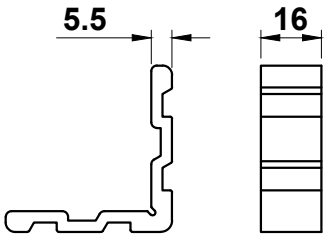	**ACW20055** **Corner Cleat**	**24**	**pack**	**W20024** **W20025** **W20026** **W20028** **W20029**	MF	
					SA	
					KL	
					HP	
					M	
					GOZ	
					W	
					Z	
					PC	

T-BARS
ACVG65=2.5mm
ACVG66=3.0mm
ACVL150=4.0mm

Screw (Grub)

MF = Mill Finish
SA = Silver Anodised
KL = Basic Colour
HP = Special Colour
M = Dual Colour
GOZ = Gold
PC = Polished Chrome
W = White
Z = Black

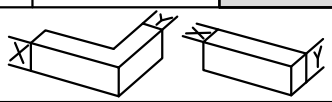

Image	Part Code	Pack	Unit	Application	Colour	
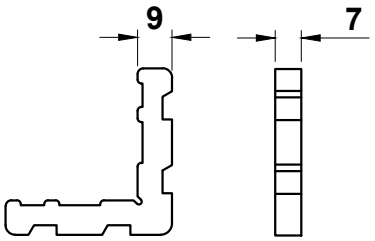	**ACW20056** **Corner Cleat**	**24**	**pack**	**W20025** **W20026** **W20027** **W20127**	MF SA KL HP M GOZ W Z PC	
	**ACW20058** **35/45 Cylinder With Thumbturn**				MF SA KL HP M GOZ W Z PC	
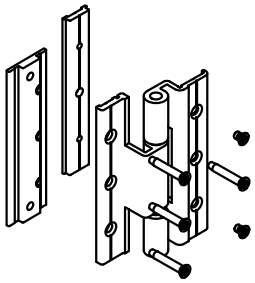	**ACW20060** **Butt Hinge**	**1**	**each**		MF SA KL HP M GOZ W Z PC	✓ ✓ ✓ ✓ ✓
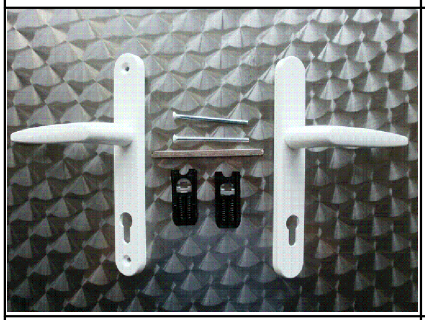	**ACW20061** **Door Lever/Lever Handle** **Includes spindle & fixings**	**1**	**Pair**		MF SA KL HP M GOZ W Z PC	✓ ✓ ✓ ✓ ✓
	**ACW20062** **Art Deco Lever / Lever Handle** **Includes Cylinder Cut Out**	**1**	**Pair**		MF SA KL HP M GOZ W Z PC	

T-BARS
ACVG65=2.5mm
ACVG66=3.0mm
ACVL150=4.0mm

Screw (Grub)

MF = Mill Finish
SA = Silver Anodised
KL = Basic Colour
HP = Special Colour
M = Dual Colour
GOZ = Gold
PC = Polished Chrome
W = White
Z = Black

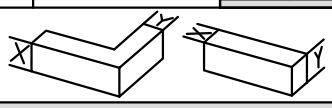

Image	Part Code	Pack	Unit	Application	Colour
	ACW20063 **Art Deco Lever / Lever Handle** **Without Cylinder Cut Out**	**1**	**Pair**		MF SA KL HP M GOZ W Z PC
					MF SA KL HP M GOZ W Z PC
					MF SA KL HP M GOZ W Z PC
					MF SA KL HP M GOZ W Z PC
					MF SA KL HP M GOZ W Z PC

T-BARS
ACVG65=2.5mm
ACVG66=3.0mm
ACVL150=4.0mm

Screw (Grub)

MF = Mill Finish
SA = Silver Anodised
KL = Basic Colour
HP = Special Colour
M = Dual Colour
GOZ = Gold
PC = Polished Chrome
W = White
Z = Black

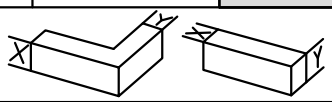

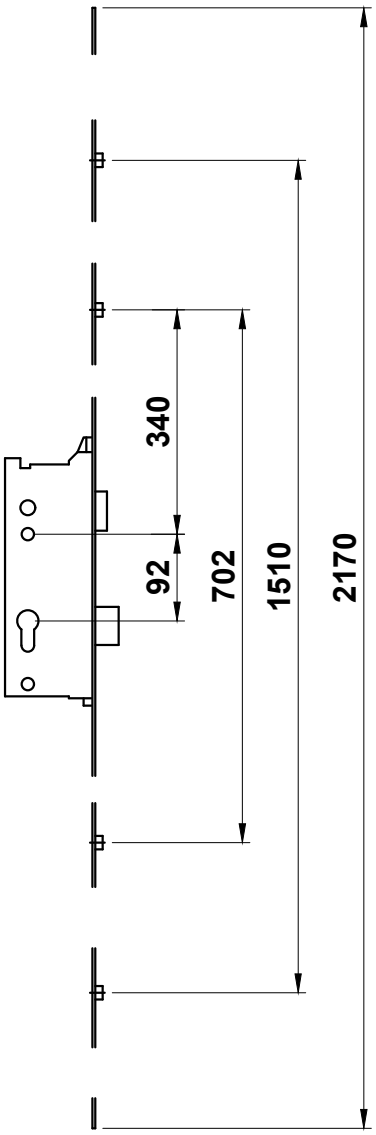

ACW20065 5 Point Lock	1	each	W20027 W20125 W20127 ACW20066 ACW20067 ACW20166	

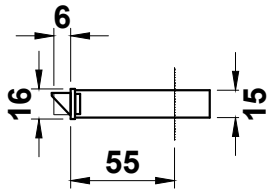

T-BARS
ACVG65=2.5mm
ACVG66=3.0mm
ACVL150=4.0mm

Screw (Grub)

MF = Mill Finish
SA = Silver Anodised
KL = Basic Colour
HP = Special Colour
M = Dual Colour

GOZ = Gold
PC = Polished Chrome
W = White
Z = Black

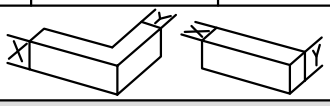

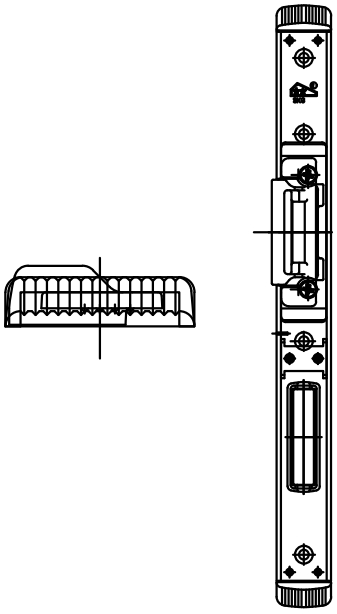	**ACW20066 L/R** **Open Out Centre Keep** **Viewed Externally** 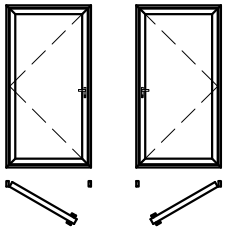 **Left Hand Open Out** **Right Hand Open Out**	**1**	**each**	**W20027** **W20048** **W20127** **AWC20065** **ACW20067**	
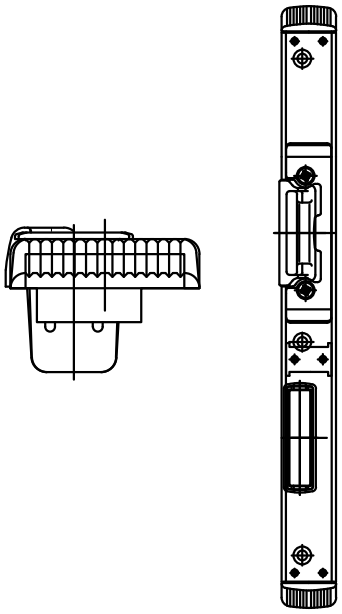	**ACW20166 L/R** **Open In Centre Keep** **Viewed Externally** 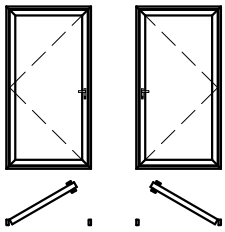 **Right Hand Open In** **Left Hand Open In**	**1**	**each**	**W20125** **W20148** **AWC20065** **ACW20067**	

T-BARS
ACVG65=2.5mm
ACVG66=3.0mm
ACVL150=4.0mm

Screw (Grub)

MF = Mill Finish **GOZ = Gold**
SA = Silver Anodised **PC = Polished Chrome**
KL = Basic Colour **W = White**
HP = Special Colour **Z = Black**
M = Dual Colour

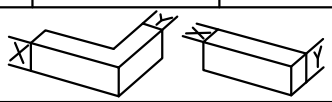

Image	Part Code	Pack	Unit	Application	Colour
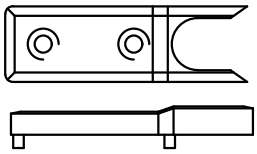	**ACW20067** **Roller Keeps**	**4**	**set**		MF SA KL HP M GOZ W Z PC
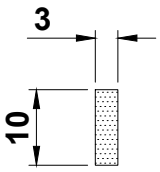	**ACW20073** **3mm x 10mm Glazing Tape**	**20**	**m**		MF SA KL HP M GOZ W Z PC
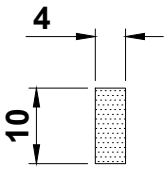	**ACW20074** **4mm x 10mm Glazing Tape**	**15**	**m**		MF SA KL HP M GOZ W Z PC
	**ACW20100 L/R** **Monkey Tail Espag Handle** **Black or Pewter**	**1**	**each**	**ACW201** **ACW202** **ACW203** **ACW204** **ACW205**	MF SA KL HP M GOZ W Z PC
	**ACW20101 L/R** **Bulb End Espag Handle** **Black or Pewter**	**1**	**each**	**ACW201** **ACW202** **ACW203** **ACW204** **ACW205**	MF SA KL HP M GOZ W Z PC

T-BARS
ACVG65=2.5mm
ACVG66=3.0mm
ACVL150=4.0mm

Screw (Grub)

MF = Mill Finish
SA = Silver Anodised
KL = Basic Colour
HP = Special Colour
M = Dual Colour
GOZ = Gold
PC = Polished Chrome
W = White
Z = Black

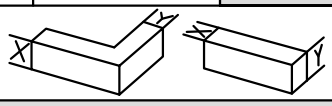

Image	Part Code	Pack	Unit	Application	Colour
	**ACW20102** **8" Monkey Tail Peg Stay** **Black or Pewter**	1	each		MF SA KL HP M GOZ W Z PC
	**ACW20103** **10" Monkey Tail Peg Stay** **Black or Pewter**	1	each		MF SA KL HP M GOZ W Z PC
	**ACW20104** **12" Monkey Tail Peg Stay** **Black or Pewter**	1	each		MF SA KL HP M GOZ W Z PC
	**ACW20105** **8" Bulb End Peg Stay** **Black or Pewter**	1	each		MF SA KL HP M GOZ W Z PC
	**ACW20106** **10" Bulb End Peg Stay** **Black or Pewter**	1	each		MF SA KL HP M GOZ W Z PC

T-BARS
ACVG65=2.5mm
ACVG66=3.0mm
ACVL150=4.0mm

Screw (Grub)

MF = Mill Finish
SA = Silver Anodised
KL = Basic Colour
HP = Special Colour
M = Dual Colour
GOZ = Gold
PC = Polished Chrome
W = White
Z = Black

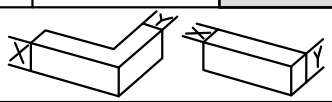

Image	Part Code	Pack	Unit	Application	Colour
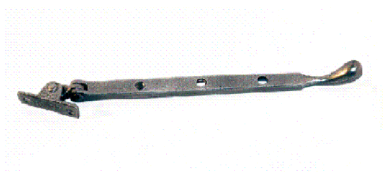	**ACW20107** **12" Bulb End Peg Stay** **Black or Pewter**	**1**	**each**		MF SA KL HP M GOZ W Z PC
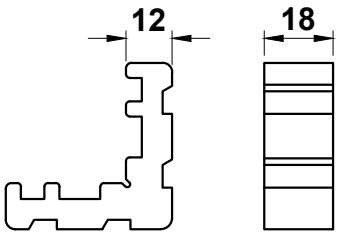	**ACW20110** **Crimping Cleat**	**24**	**pack**	**W20110**	MF SA KL HP M GOZ W Z PC
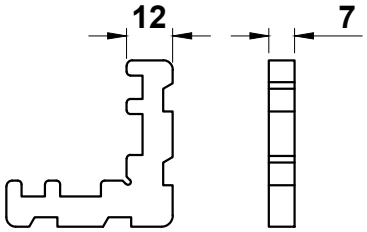	**ACW20115** **Crimping Cleat**	**24**	**pack**	**W20126**	MF SA KL HP M GOZ W Z PC
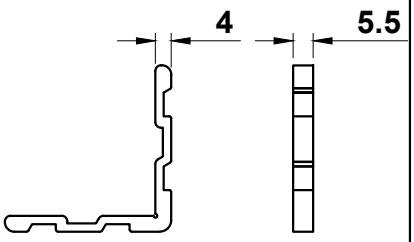	**ACW20116** **Crimping Cleat**	**24**	**pack**	**W20126**	MF SA KL HP M GOZ W Z PC
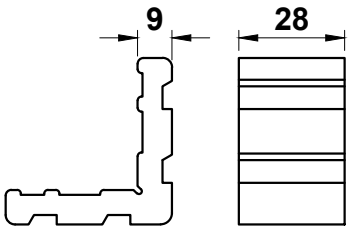	**ACW20120** **Crimping Cleat**	**24**	**pack**	**W20120**	MF SA KL HP M GOZ W Z PC

T-BARS
ACVG65=2.5mm
ACVG66=3.0mm
ACVL150=4.0mm

Screw (Grub)

MF = Mill Finish
SA = Silver Anodised
KL = Basic Colour
HP = Special Colour
M = Dual Colour
GOZ = Gold
PC = Polished Chrome
W = White
Z = Black

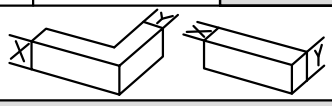

Image	Part Code	Pack	Unit	Application	Colour	
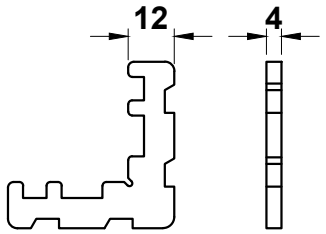	**ACW20122** **Crimping Cleat**	**24**	**pack**	**W20122**	MF SA KL HP M GOZ W Z PC	
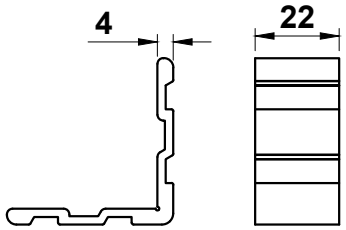	**ACW20126** **Crimping Cleat**	**24**	**pack**	**W20125**	MF SA KL HP M GOZ W Z PC	
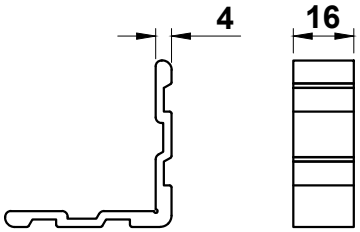	**ACW20127** **Crimping Cleat**	**24**	**pack**	**W20047** **W20147**	MF SA KL HP M GOZ W Z PC	
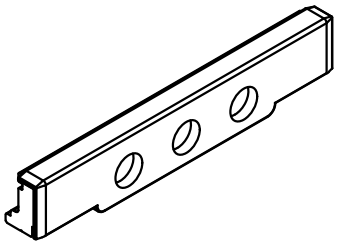	**ACW20128** **24mm Handle Fixing Block**	**1**	**each**	**W20168**	MF ✓ SA KL ✓ HP M GOZ W ✓ Z ✓ PC	
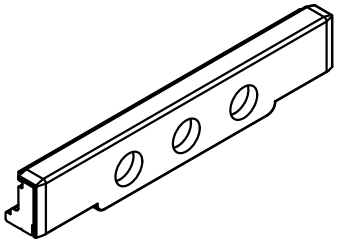	**ACW20129** **Handle Fixing Block for use with W20170 bead only**	**1**	**each**	**W20170**	MF ✓ SA KL ✓ HP M GOZ W ✓ Z ✓ PC	

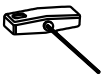

T-BARS
ACVG65=2.5mm
ACVG66=3.0mm
ACVL150=4.0mm

Screw (Grub)

MF = Mill Finish
SA = Silver Anodised
KL = Basic Colour
HP = Special Colour
M = Dual Colour
GOZ = Gold
PC = Polished Chrome
W = White
Z = Black

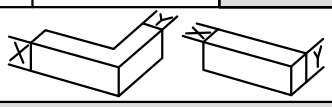

Image	Part Code	Pack	Unit	Application	Colour
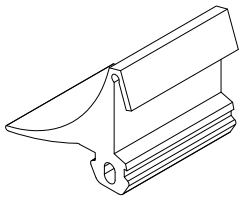	**ACW20130** **Central Gasket**	**100**	**m**	**W20110** **W20130** **ACW20133**	MF SA KL HP M GOZ W Z PC
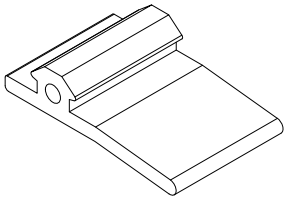	**ACW20131** **Outer Frame External Gasket**	**100**	**m**	**W20110** **W20130**	MF SA KL HP M GOZ W Z PC
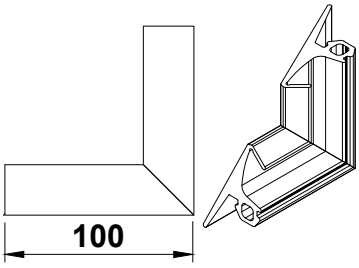	**ACW20133** **Corner Moulding to suit ACW20130**	**12**	**pack**	**W20110** **W20130** **ACW20130**	MF SA KL HP M GOZ W Z PC
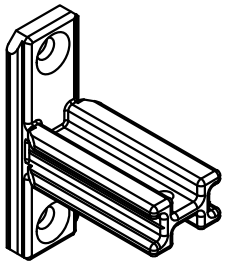	**ACW20135** **Cruciform Bracket**	**10**	**pack**	**W20130**	MF SA KL HP M GOZ W Z PC
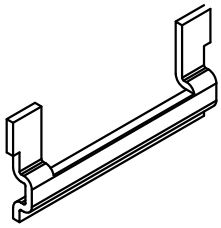	**ACW20136** **Transom/Mullion Anti-Twist Clip**	**100**	**pack**	**W20130**	MF SA KL HP M GOZ W Z PC

T-BARS
ACVG65=2.5mm
ACVG66=3.0mm
ACVL150=4.0mm

Screw (Grub)

MF = Mill Finish
SA = Silver Anodised
KL = Basic Colour
HP = Special Colour
M = Dual Colour
GOZ = Gold
PC = Polished Chrome
W = White
Z = Black

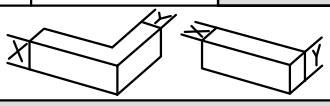

Image	Part Code	Pack	Unit	Application	Colour
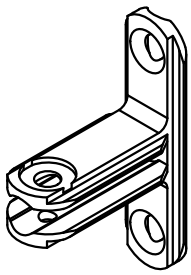	**ACW20137** **Transom Bracket**	**24**	**pack**	**W20018** **W20037** **W20137**	MF SA KL HP M GOZ W Z PC
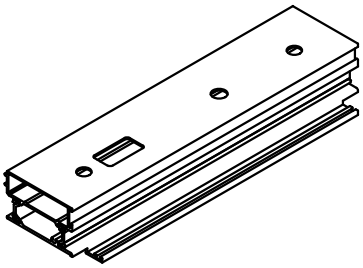	**ACW20138 L/R** **Pre Prepared Lock Casing** **Open In & Open Out** 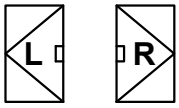	**1**	**each**		MF SA KL HP M GOZ W Z PC
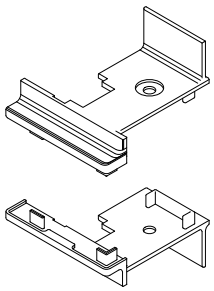	**ACW20148** **End Caps** **(10 Pairs Per Pack)**	**10**	**pair**	**W20148**	MF SA KL HP M GOZ W Z PC
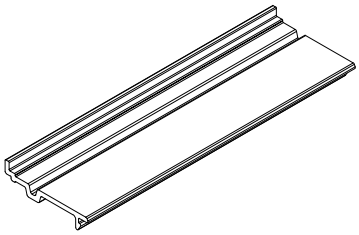	**ACW20157** **Bridge Packer**	**1**	**each**	**W20110** **W20120** **W20130**	MF SA KL HP M GOZ W Z PC
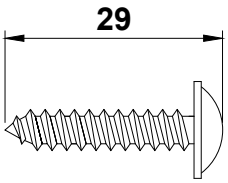	**ACW20160** **No.12 x 1" Pozi Flange** **Stainless Steel** **Self Tapper**	**100**	**pack**	**W20015**	MF SA KL HP M GOZ W Z PC

T-BARS
ACVG65=2.5mm
ACVG66=3.0mm
ACVL150=4.0mm

Screw (Grub)

MF = Mill Finish
SA = Silver Anodised
KL = Basic Colour
HP = Special Colour
M = Dual Colour
GOZ = Gold
PC = Polished Chrome
W = White
Z = Black

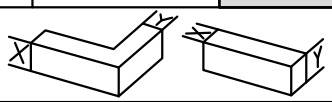

Image	Part Code	Pack	Unit	Application	Colour
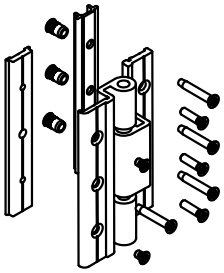	**ACW20164** **Open In Hinge Kit**	**1**	**each**	**W20125**	MF SA KL HP M GOZ W Z PC
	**ACW20165** **Art Deco Espag Handle** **Antique Brass & Satin Nickle Plate**	**1**	**each**		MF SA KL HP M GOZ W Z PC
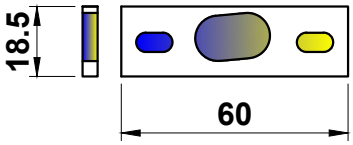	**ACW20432** **Shootbolt Keep**	**2**	**pack**	**W20015** **ACVL432**	MF SA KL HP M GOZ W Z PC
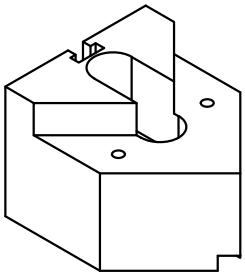	**ACW906** **Vee Block**	**1**	**each**	**W20024** **W20025** **W20026** **W20027** **W20028** **W20029** **W20127** **W20047** **W20147**	MF SA KL HP M GOZ W Z PC
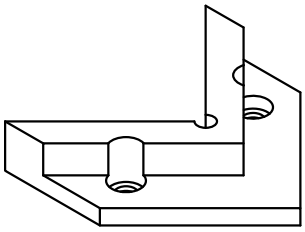	**ACW907** **5.6mm Tufnel Packer**	**1**	**each**	**W20015** **W20016** **W20024** **W20025** **W20047** **W20127** **W20147**	MF SA KL HP M GOZ W Z PC

T-BARS
ACVG65=2.5mm
ACVG66=3.0mm
ACVL150=4.0mm

Screw (Grub)

MF = Mill Finish
SA = Silver Anodised
KL = Basic Colour
HP = Special Colour
M = Dual Colour
GOZ = Gold
PC = Polished Chrome
W = White
Z = Black

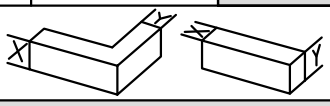

Image	Part Code	Pack	Unit	Application	Colour
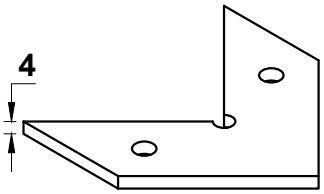	**ACW908** **4mm Packer**	**1**	**each**	**W20026** **W20028** **W20047**	MF SA KL HP M GOZ W Z PC
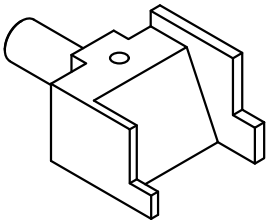	**ACW909** **Punches**	**1**	**pair**	**W20024** **W20025** **W20026** **W20028** **W20029**	MF SA KL HP M GOZ W Z PC
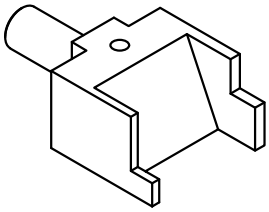	**ACW910** **Punches**	**1**	**pair**	**W20027** **W20127**	MF SA KL HP M GOZ W Z PC
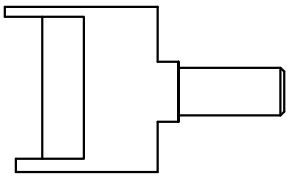	**ACW914** **Punches**	**1**	**pair**	**W20125**	MF SA KL HP M GOZ W Z PC
	**ACW916** **Support Packer**	**1**	**each**	**W20017**	MF SA KL HP M GOZ W Z PC

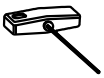

T-BARS
ACVG65=2.5mm
ACVG66=3.0mm
ACVL150=4.0mm

Screw (Grub)

MF = Mill Finish
SA = Silver Anodised
KL = Basic Colour
HP = Special Colour
M = Dual Colour
GOZ = Gold
PC = Polished Chrome
W = White
Z = Black

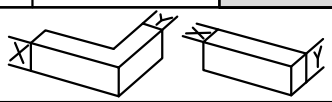

Image	Part Code	Pack	Unit	Application	Colour
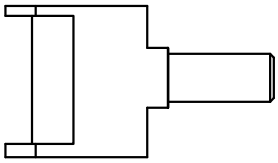	**ACW917** **Punches**	**1**	**pair**	**W20122**	MF SA KL HP M GOZ W Z PC
	**ACW918** **Vee Block**	**1**	**each**	**W20018**	MF SA KL HP M GOZ W Z PC
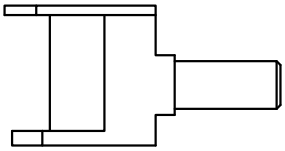	**ACW919** **Punches**	**1**	**each**	**W20120**	MF SA KL HP M GOZ W Z PC
	**ACW921** **Punches**	**1**	**each**	**W20126**	MF SA KL HP M GOZ W Z PC
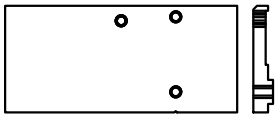	**ACW925** **Door Drill Jig** **(Must be clamped in position)**	**1**	**each**	**W20037** **W20038** **W20137** **W20138**	MF SA KL HP M GOZ W Z PC

T-BARS
ACVG65=2.5mm
ACVG66=3.0mm
ACVL150=4.0mm

Screw (Grub)

MF = Mill Finish
SA = Silver Anodised
KL = Basic Colour
HP = Special Colour
M = Dual Colour
GOZ = Gold
PC = Polished Chrome
W = White
Z = Black

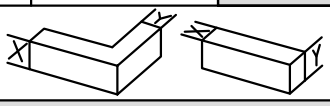

Image	Part Code	Pack	Unit	Application	Colour
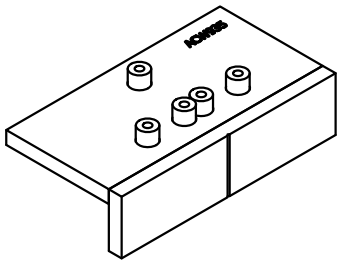	**ACW935** **Transom Drill Jig**	**1**	**each**	**ACW20135** **W20130**	MF SA KL HP M GOZ W Z PC
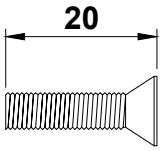	**WCA134** **Stainless M5 x 20mm Pozi Csk Machine Screw**	**100**	**pack**	**ACW20028** **ACW20029** **ACW20128** **ACW20129**	MF SA KL HP M GOZ W Z PC
					MF SA KL HP M GOZ W Z PC
					MF SA KL HP M GOZ W Z PC
					MF SA KL HP M GOZ W Z PC

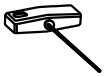

T-BARS
ACVG65=2.5mm
ACVG66=3.0mm
ACVL150=4.0mm

Screw (Grub)

MF = Mill Finish
SA = Silver Anodised
KL = Basic Colour
HP = Special Colour
M = Dual Colour
GOZ = Gold
PC = Polished Chrome
W = White
Z = Black

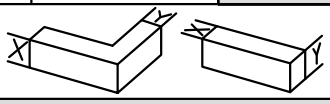

Friction Hinge Stays 13mm Stack (Standard)

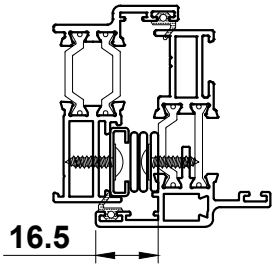

Top Hung Windows

Top Hung	Type of Hinge / Stay	Max. Vent Weight (kgs)	Height Mimimum	Height Maximum	Typical Width
ACINDS10	Standard	16	275	400	–
ACINDS16		21	400	780	–
ACINDS20		20	700	1100	–
ACINDS24		40	850	1300	–
ACINDA10	Austenitic	16	275	400	–
ACINDA16		21	400	780	–
ACINDA20		20	700	1100	–
ACINDA24		40	850	1300	–
ACINDR12	Restricted	20	350	550	–
ACINDR16		21	500	780	–
ACINDR20		26	700	1100	–
ACINDR24		40	850	1300	–

Side Hung Windows

Side Hung	Type of Hinge / Stay	Max. Vent Weight (kgs)	Width Minimum	Width Maximum	Typical Height
ACINDSSH12	Standard	22	300	600	-
ACINDSSH16		28	400	600	-
ACINDASH12	Austenitic	22	300	600	-
ACINDASH16		28	400	600	-
ACINDRSH12	Restricted	22	300	600	-
ACINDRSH16		24	400	600	-
ACETME13	Egress *use with ACET352 pull in blocks	40	365	865	-

Note1: Vent Height / Width is measured in mm from rebate to rebate (not overall size or outer frame)
Note2: Top hung height and side hung width sizes to be reduced by 2mm where size is 450mm or smaller
Note3: Typical Dimensions based on Max. Size and Glass 30kg/metre
Note4: For additional security use ACET513 hinge protectors

T-BARS
ACVG65=2.5mm
ACVG66=3.0mm
ACVL150=4.0mm

Screw (Grub)

MF = Mill Finish
SA = Silver Anodised
KL = Basic Colour
HP = Special Colour
M = Dual Colour

GOZ = Gold
PC = Polished Chrome
W = White
Z = Black

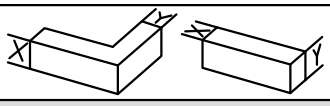

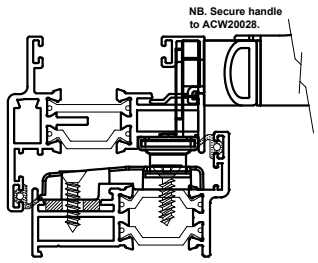

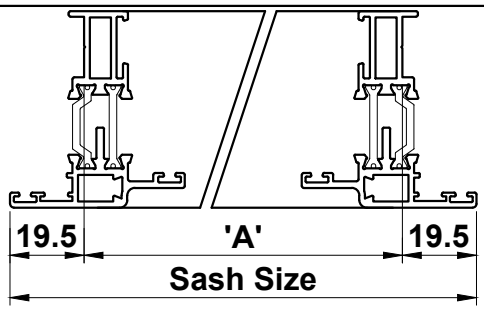

Part Code	Rod Length (mm)	Number of Keeps	Sash Rebate Size ('A')	
			Minimum	Maximum
ACW201L	335	2	340	505
ACW201R				
ACW202L	500	2	506	755
ACW202R				
ACW203L	750	2	756	1005
ACW203R				
ACW204L	1000	4	1006	1255
ACW204R				
ACW205L	1250	4	1256	1400
ACW205R				

Note: 1, To Suit Handle ACET165
2, Not suitable for W20122

Cam Locking Direction

Cam Locking Direction

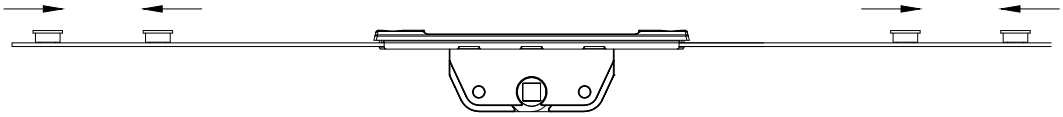

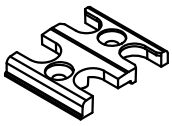

Keep

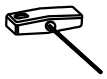

T-BARS
ACVG65=2.5mm
ACVG66=3.0mm
ACVL150=4.0mm

Screw (Grub)

MF = Mill Finish
SA = Silver Anodised
KL = Basic Colour
HP = Special Colour
M = Dual Colour

GOZ = Gold
PC = Polished Chrome
W = White
Z = Black

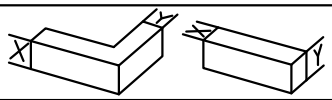

W20122 Lock Options

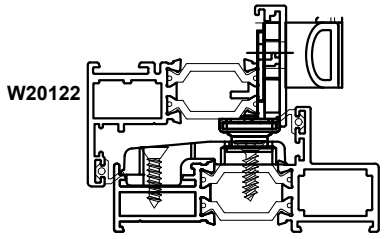

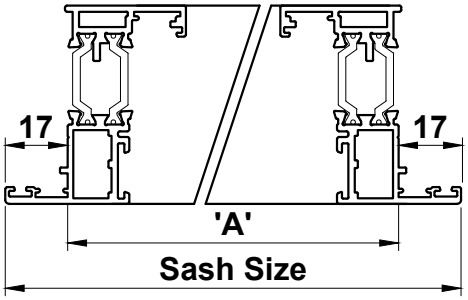

Part Code	Rod Length (mm)	Number of Keeps	Sash Rebate Size ('A')	
			Minimum	Maximum
ACET301L	335	2	340	505
ACET301R				
ACET302L	500	2	506	755
ACET302R				
ACET303L	750	2	756	1005
ACET303R				
ACET304L	1000	4	1006	1255
ACET304R				
ACET305L	1250	4	1256	1400
ACET305R				

Note: To Suit Handle ACET165

Cam Locking Direction

Cam Locking Direction

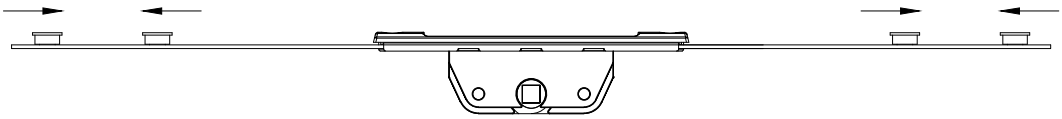

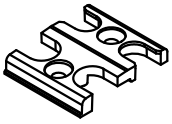

Keep

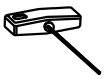

T-BARS
ACVG65=2.5mm
ACVG66=3.0mm
ACVL150=4.0mm

Screw (Grub)

MF = Mill Finish
SA = Silver Anodised
KL = Basic Colour
HP = Special Colour
M = Dual Colour

GOZ = Gold
PC = Polished Chrome
W = White
Z = Black

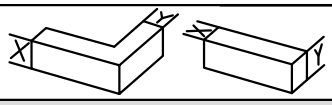

Image	Part Code	Pack	Unit	Application	Colour	
	**ACMX09700** **Alu. Polish**	**1**	**each**		MF	✓
					SA	
					KL	
					HP	
					M	
					GOZ	
					W	
					Z	
					PC	
	**ACMX09761** **Maxi Gloss**	**1**	**each**		MF	
					SA	
					KL	
					HP	
					M	
					GOZ	
					W	
					Z	
					PC	
	**ACMX09762** **Alu. Bright**	**1**	**each**		MF	
					SA	
					KL	
					HP	
					M	
					GOZ	
					W	
					Z	
					PC	
	**ACMX09763** **Teflon Spray**	**1**	**each**		MF	
					SA	
					KL	
					HP	
					M	
					GOZ	
					W	
					Z	
					PC	
	**ACMX09764** **Maxi Clean**	**1**	**each**		MF	
					SA	
					KL	
					HP	
					M	
					GOZ	
					W	
					Z	
					PC	

T-BARS
ACVG65=2.5mm
ACVG66=3.0mm
ACVL150=4.0mm

Screw (Grub)

MF = Mill Finish
SA = Silver Anodised
KL = Basic Colour
HP = Special Colour
M = Dual Colour
GOZ = Gold
W = White
Z = Black

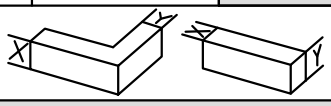

Image	Part Code	Pack	Unit	Application	Colour
	**ACMX09765** **Alu. Cleaner**	**1**	**each**		MF SA KL HP M GOZ W Z PC
	**ACMX09770** **Roll & Wrap 100mm**	**1**	**each**		MF SA KL HP M GOZ W Z PC
	**ACMX09775** **Grip Handwrap**	**1**	**each**		MF SA KL HP M GOZ W Z PC
	**ACMX09801** **Protective Tape 50mm**	**1**	**each**		MF SA KL HP M GOZ W Z PC
	**ACMX09802** **Protective Tape 70mm**	**1**	**each**		MF SA KL HP M GOZ W Z PC

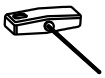

T-BARS
ACVG65=2.5mm
ACVG66=3.0mm
ACVL150=4.0mm

Screw (Grub)

MF = Mill Finish
SA = Silver Anodised
KL = Basic Colour
HP = Special Colour

M = Dual Colour
GOZ = Gold
W = White
Z = Black

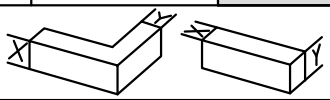

Image	Part Code	Pack	Unit	Application	Colour
	**ACMX09803** **Protective Tape 100mm**	**1**	**each**		MF SA KL HP M GOZ W Z PC
	**ACMX09830** **Rubber Sealant**	**1**	**each**		MF SA KL HP M GOZ W Z PC
	**ACSIL04** **Sealing Glue** **Order with suffix of KL colour (eg.ACSIL04KL005) or BL=Black/WP=White/ CL=Clear**	**1**	**each**		MF SA KL ✓ HP M GOZ W ✓ Z ✓ PC
	**ACSIL08** **Silicon Gun**	**1**	**each**		MF SA KL HP M GOZ W Z PC
	**ACSIL013** **Glue for Mitre**	**1**	**each**		MF SA KL HP M GOZ W Z PC

T-BARS
ACVG65=2.5mm
ACVG66=3.0mm
ACVL150=4.0mm

Screw (Grub)

MF = Mill Finish
SA = Silver Anodised
KL = Basic Colour
HP = Special Colour

M = Dual Colour
GOZ = Gold
W = White
Z = Black

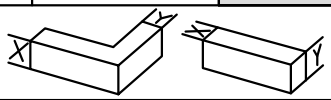

Alitherm Heritage

STANDARD ACCESSORIES

Image	Part Code	Pack	Unit	Application	Colour	
	**ACSIL014** **Anti-Corrosion Coating**	1	each		MF	✓
					SA	
					KL	
					HP	
					M	
					GOZ	
					W	
					Z	
					PC	
					MF	
					SA	
					KL	
					HP	
					M	
					GOZ	
					W	
					Z	
					PC	
					MF	
					SA	
					KL	
					HP	
					M	
					GOZ	
					W	
					Z	
					PC	
					MF	
					SA	
					KL	
					HP	
					M	
					GOZ	
					W	
					Z	
					PC	
					MF	
					SA	
					KL	
					HP	
					M	
					GOZ	
					W	
					Z	
					PC	

T-BARS
ACVG65=2.5mm
ACVG66=3.0mm
ACVL150=4.0mm

Screw (Grub)

MF = Mill Finish
SA = Silver Anodised
KL = Basic Colour
HP = Special Colour
M = Dual Colour
GOZ = Gold
W = White
Z = Black

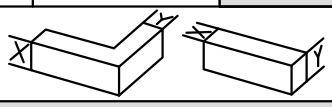

Section C

Sections

Scale Elevations

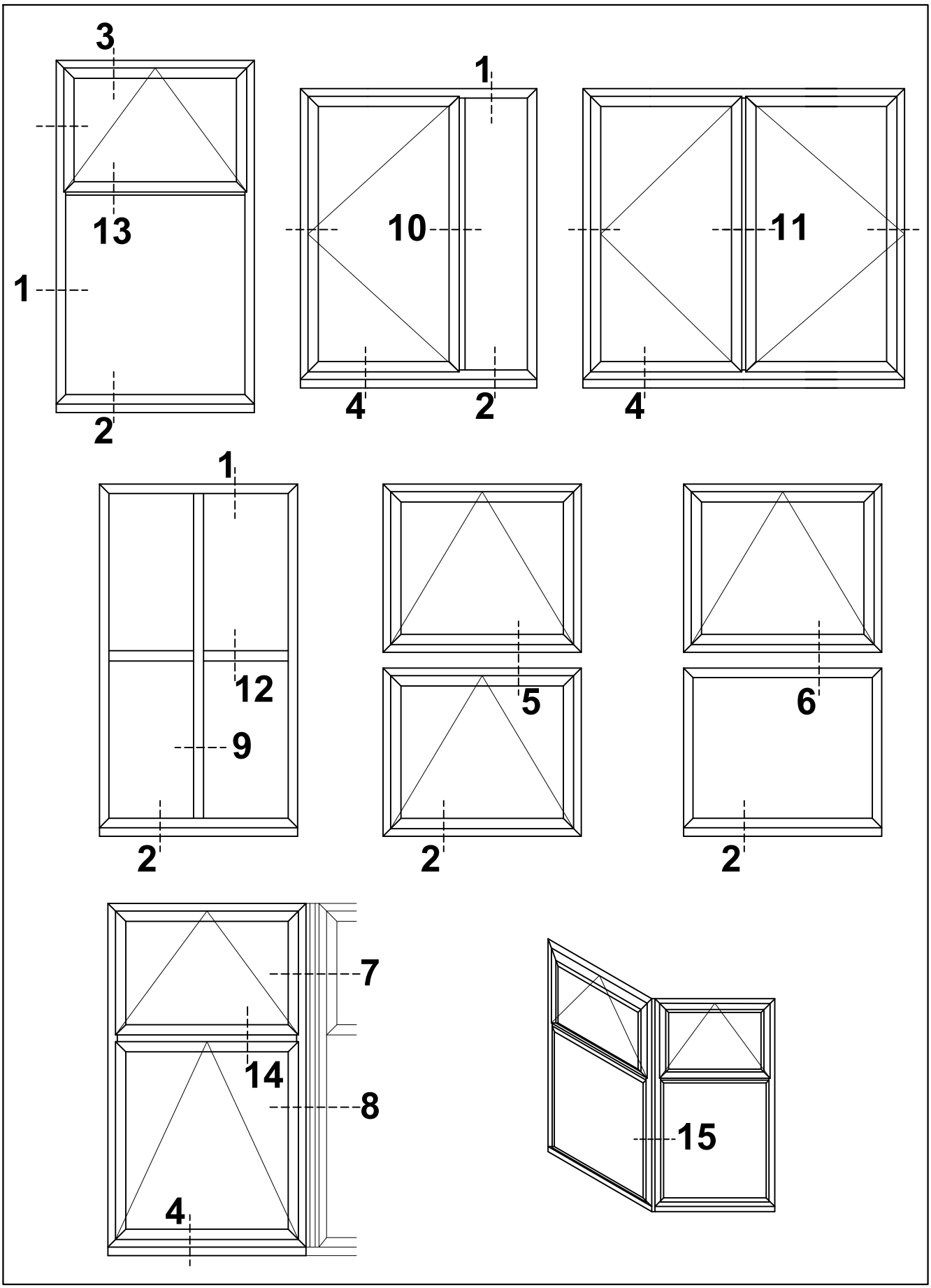
3
13
1
2
1
10
4
2
11
4
1
12
9
2
5
2
6
2
7
14
8
4
15

Detail 1A

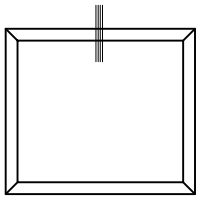

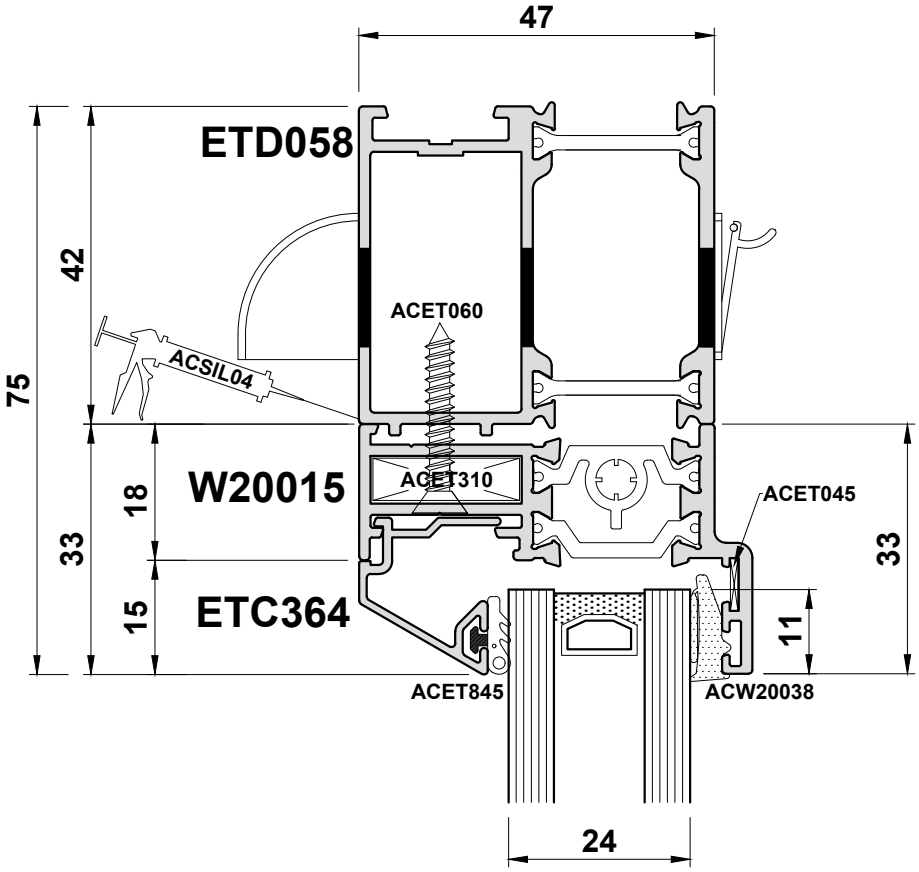

Do Not Scale From This Drawing

Detail 1B

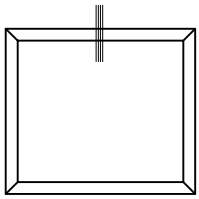

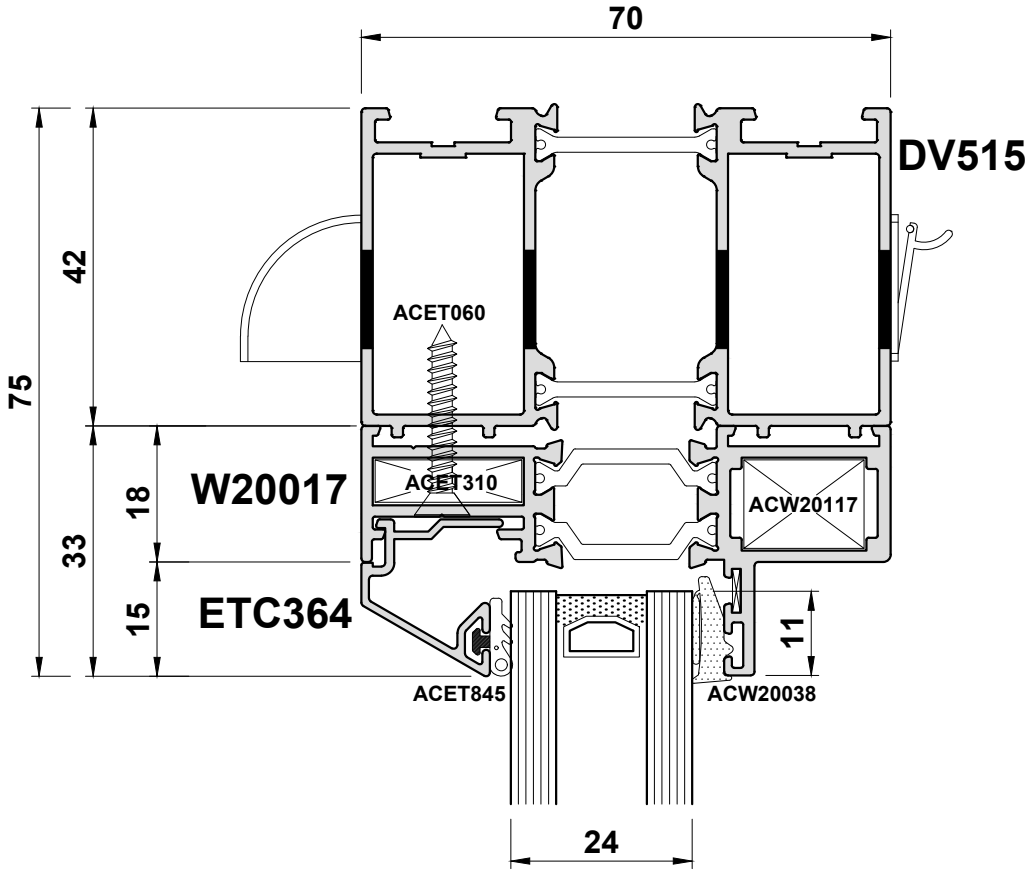

Do Not Scale From This Drawing

Detail 1C

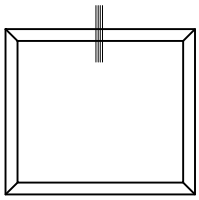

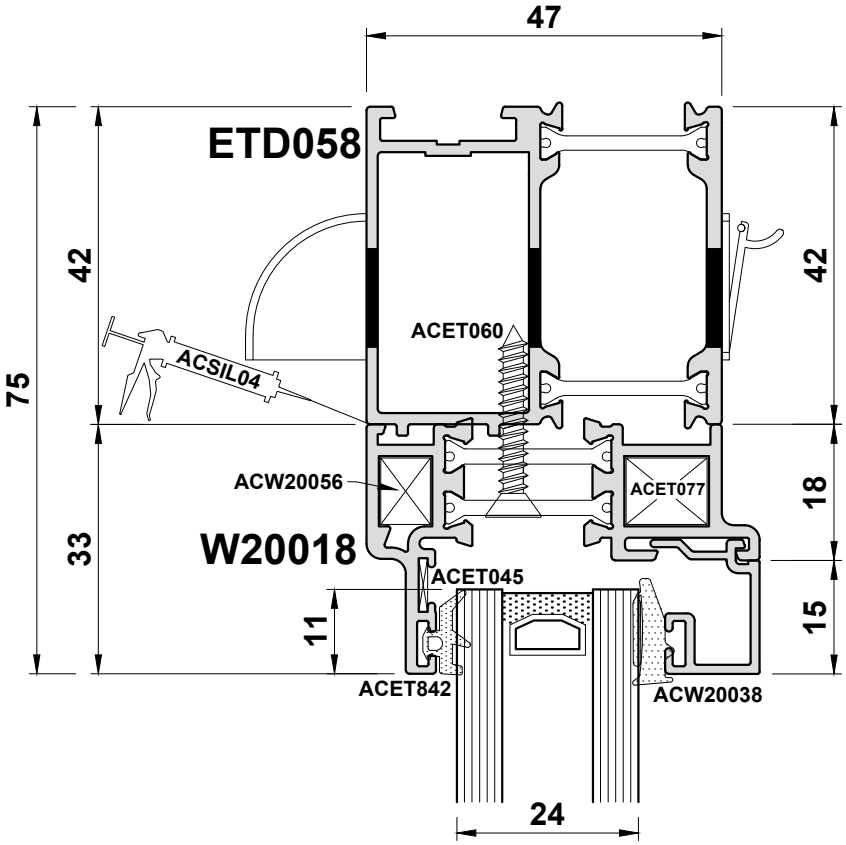

Do Not Scale From This Drawing

Detail 1D

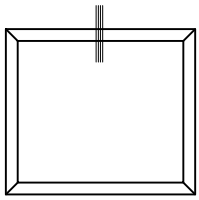

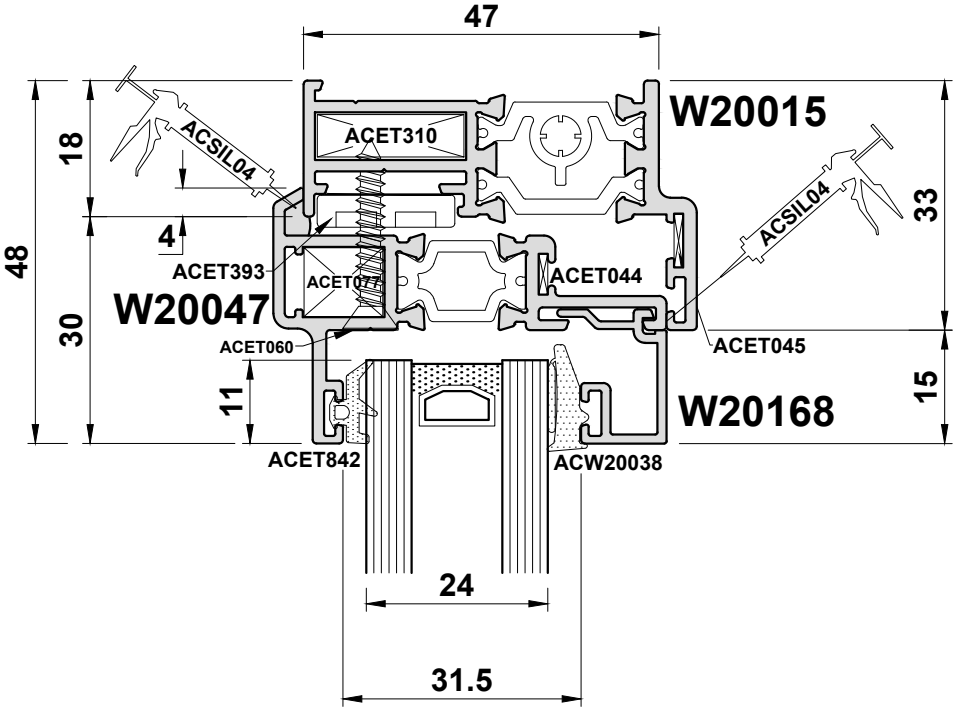

Do Not Scale From This Drawing

Detail 1E

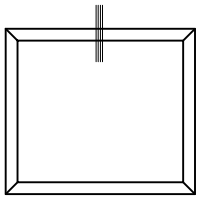

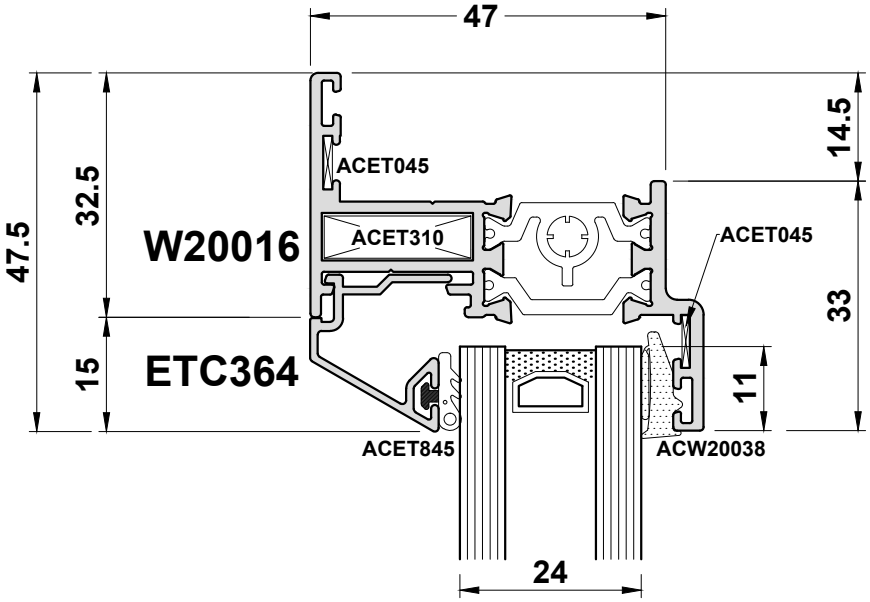

Do Not Scale From This Drawing

Detail 1F

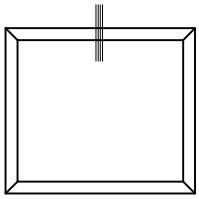

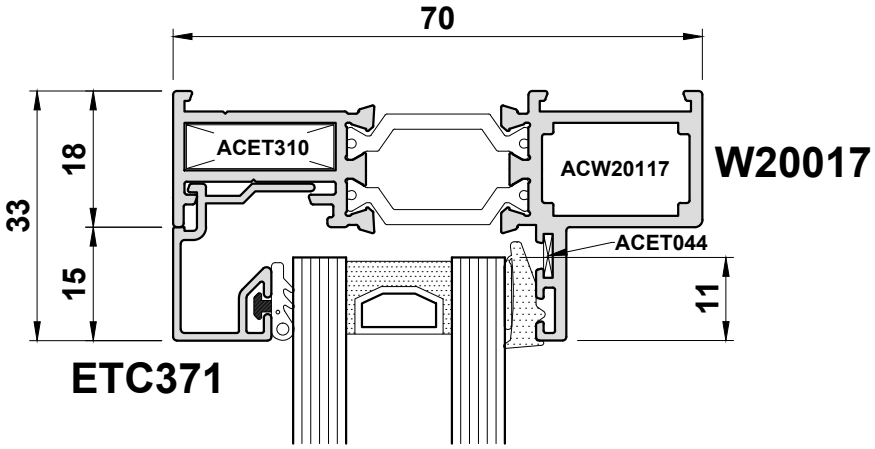

Do Not Scale From This Drawing

Detail 2A

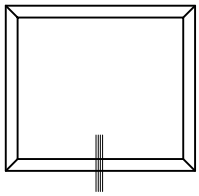

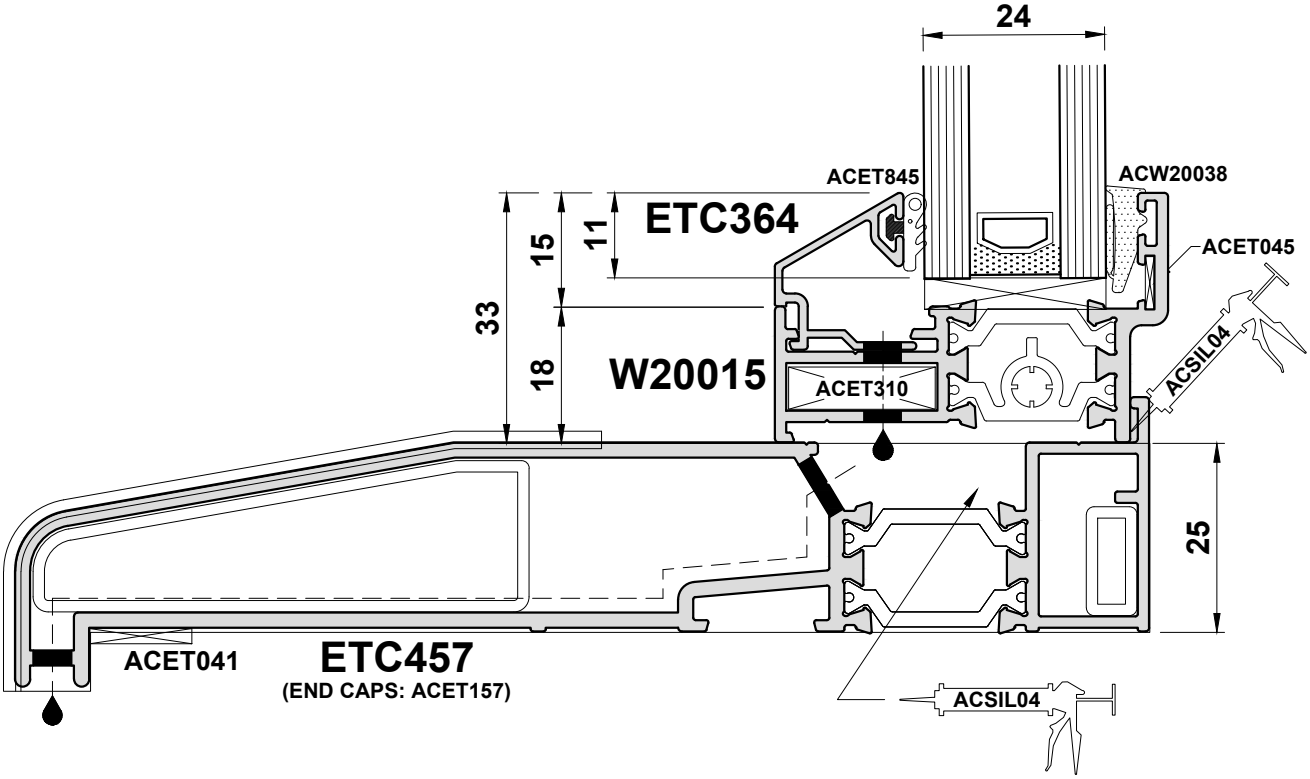

Do Not Scale From This Drawing

Detail 2B

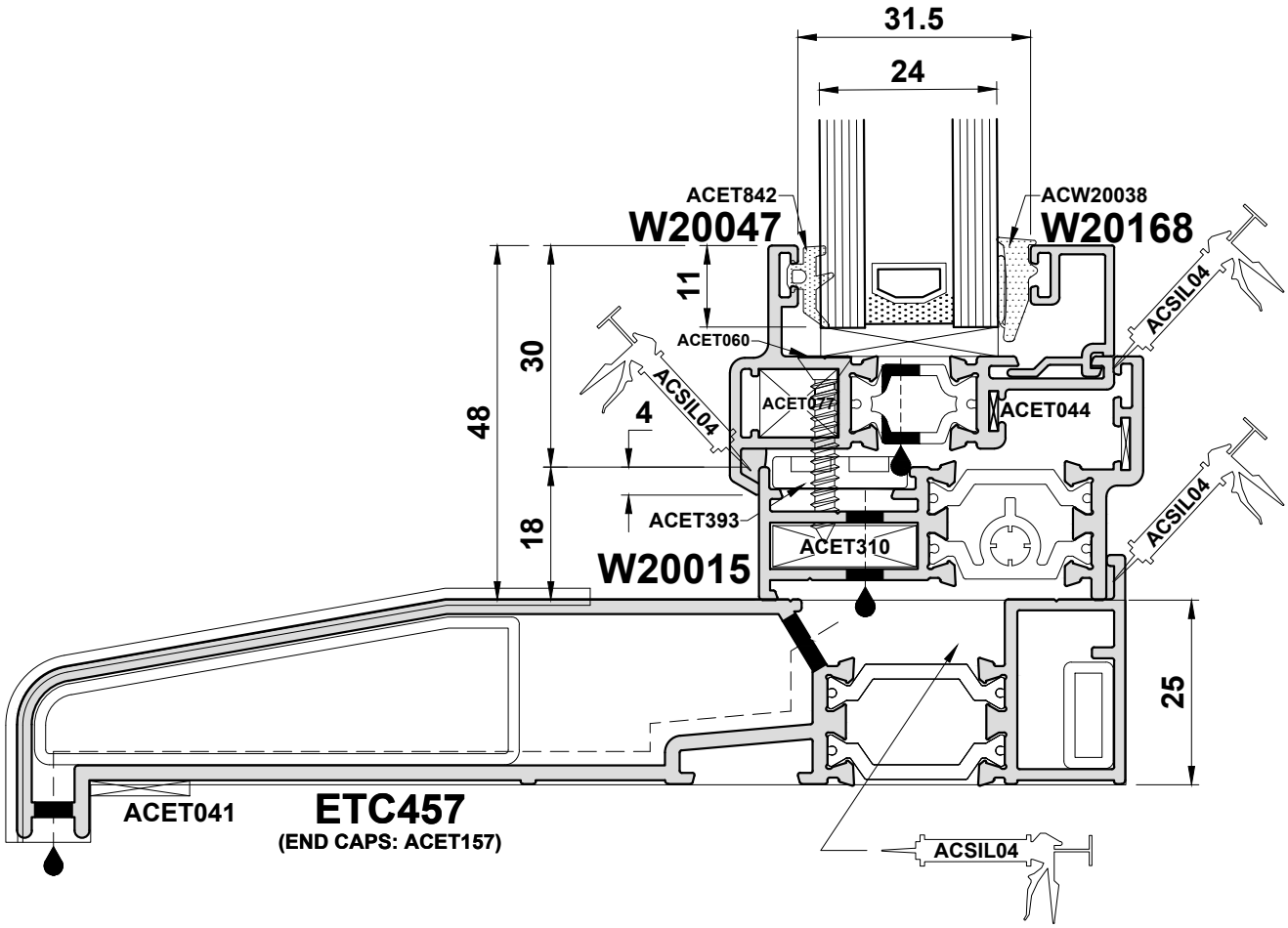

Do Not Scale From This Drawing

Detail 2C

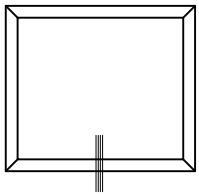

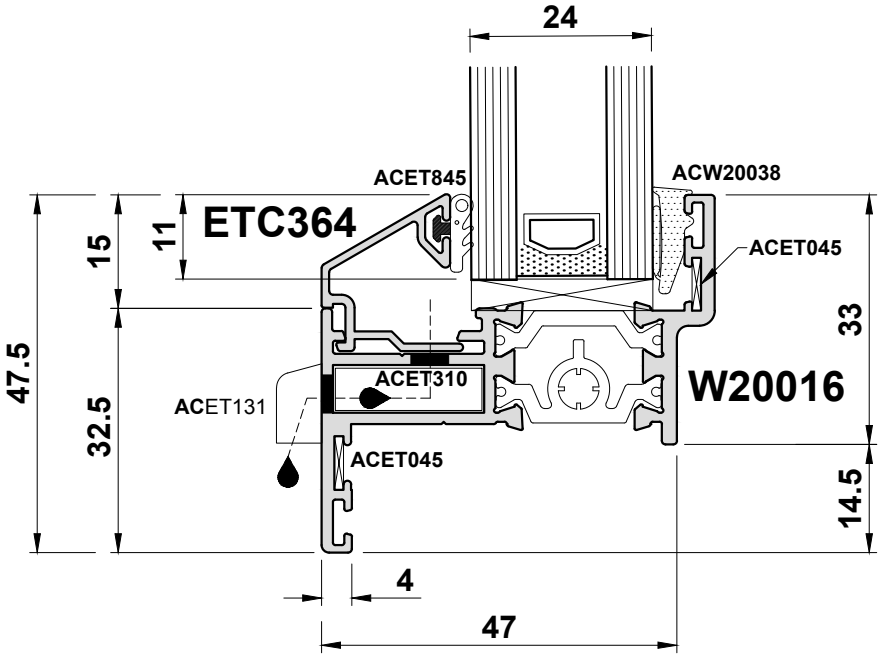

Do Not Scale From This Drawing

Detail 2D

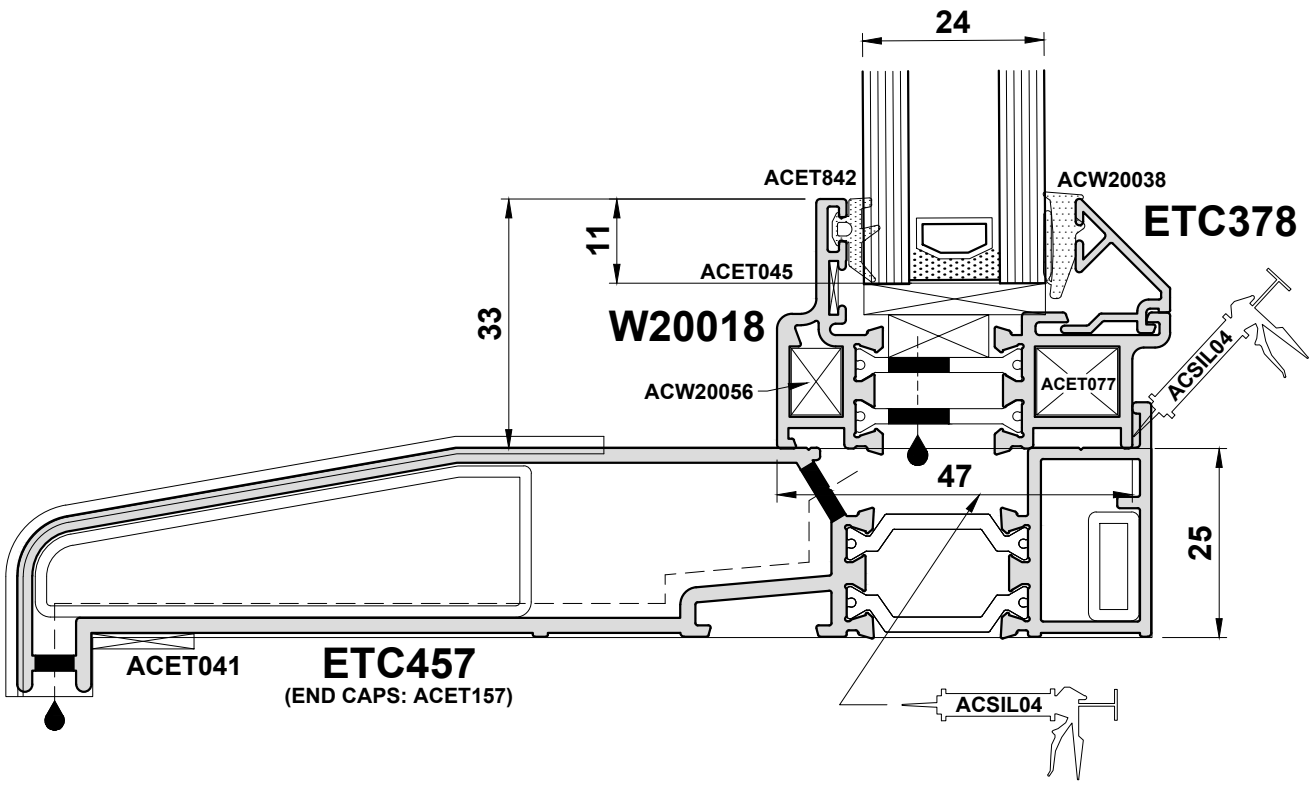

Do Not Scale From This Drawing

Detail 2E

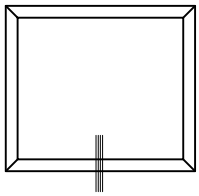

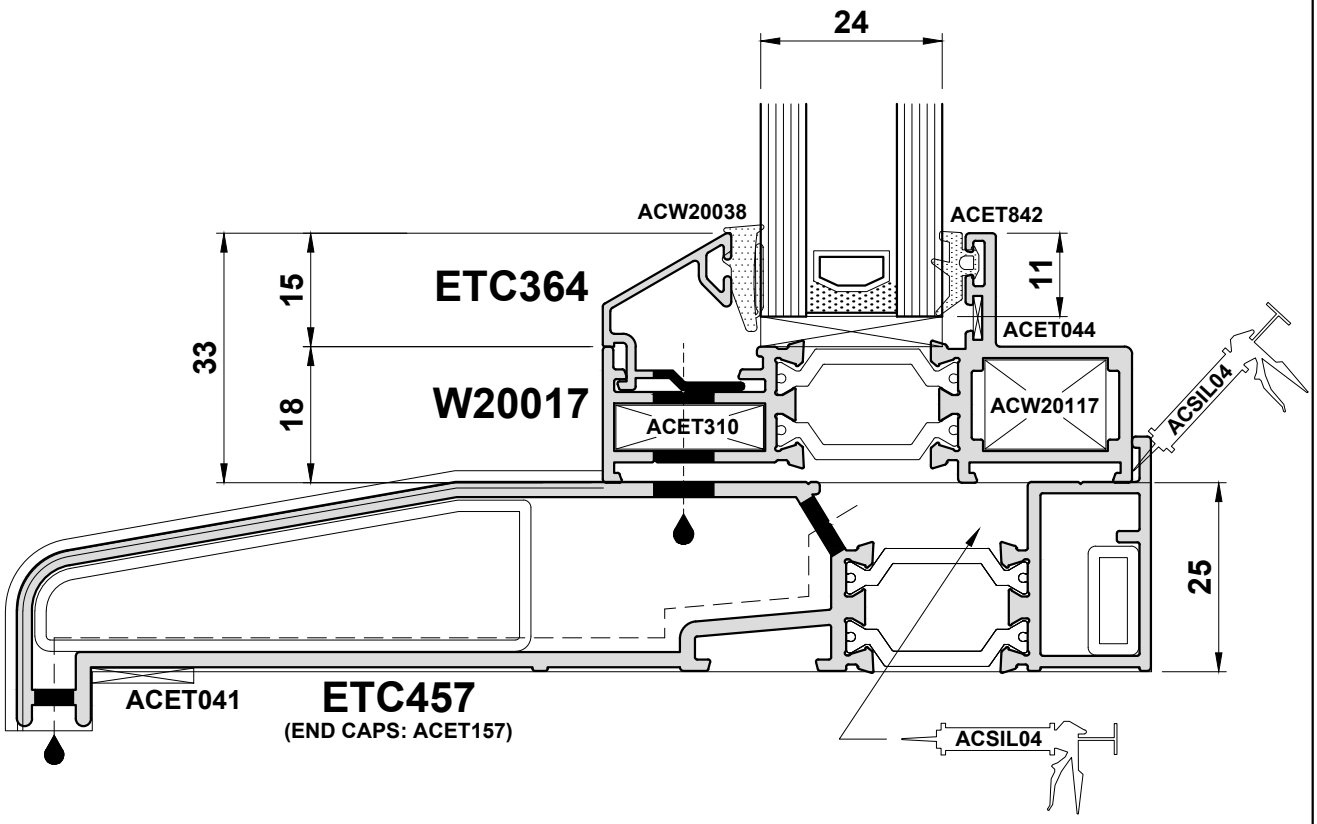

Do Not Scale From This Drawing

Detail 3A

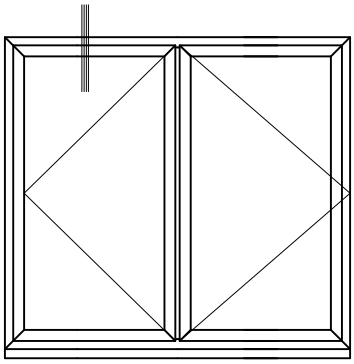

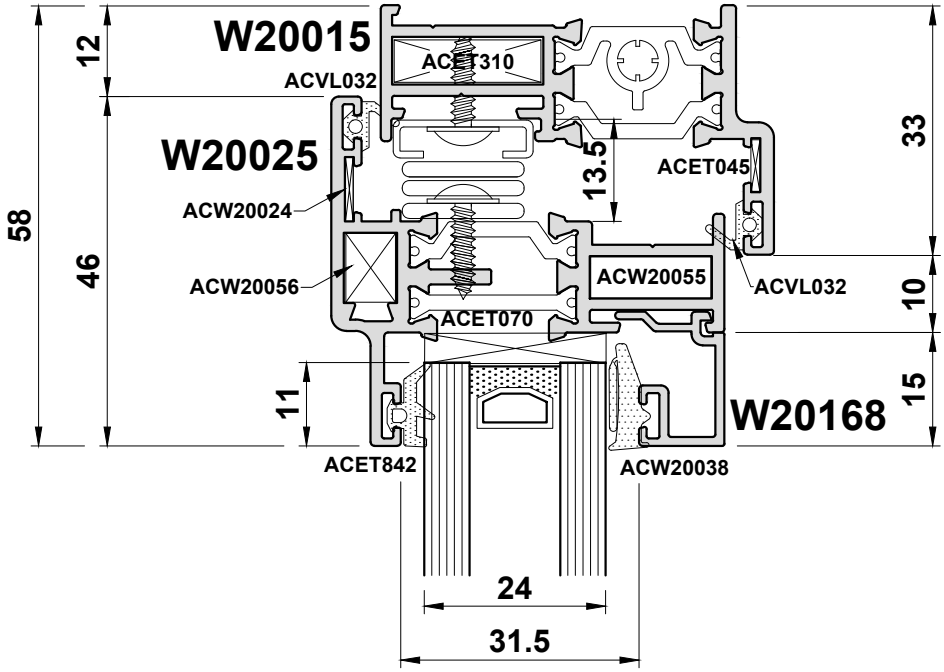

Do Not Scale From This Drawing

Detail 3B

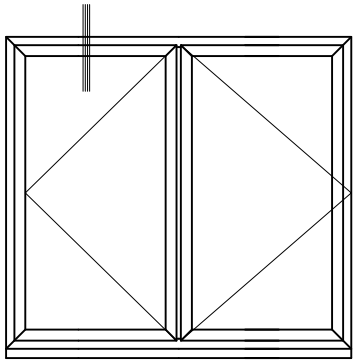

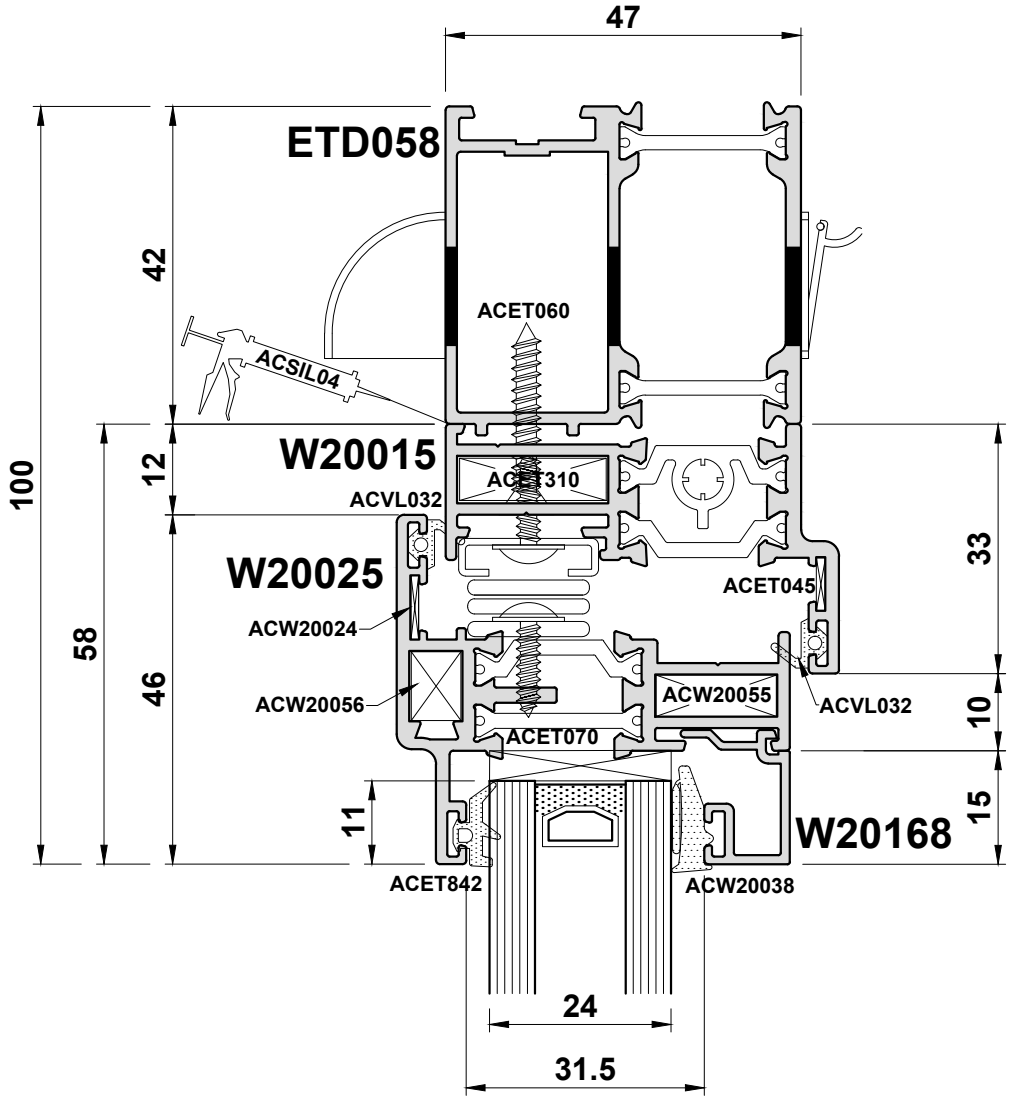

Do Not Scale From This Drawing

Detail 3C

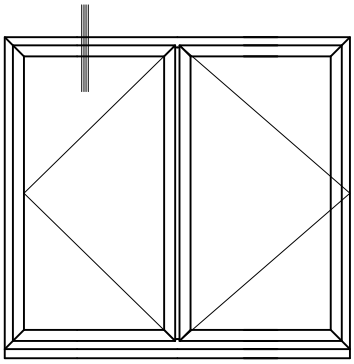

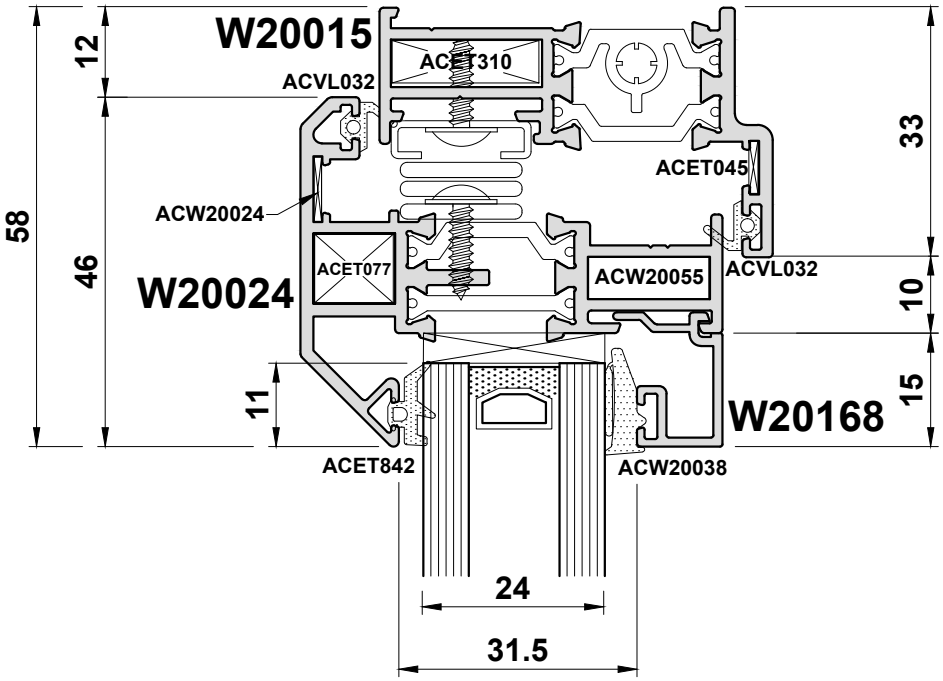

Do Not Scale From This Drawing

Detail 3D

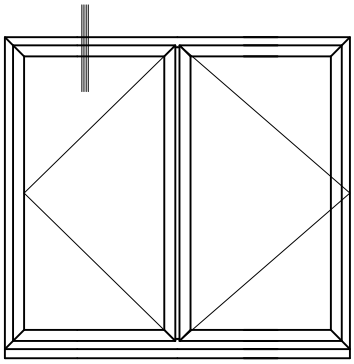

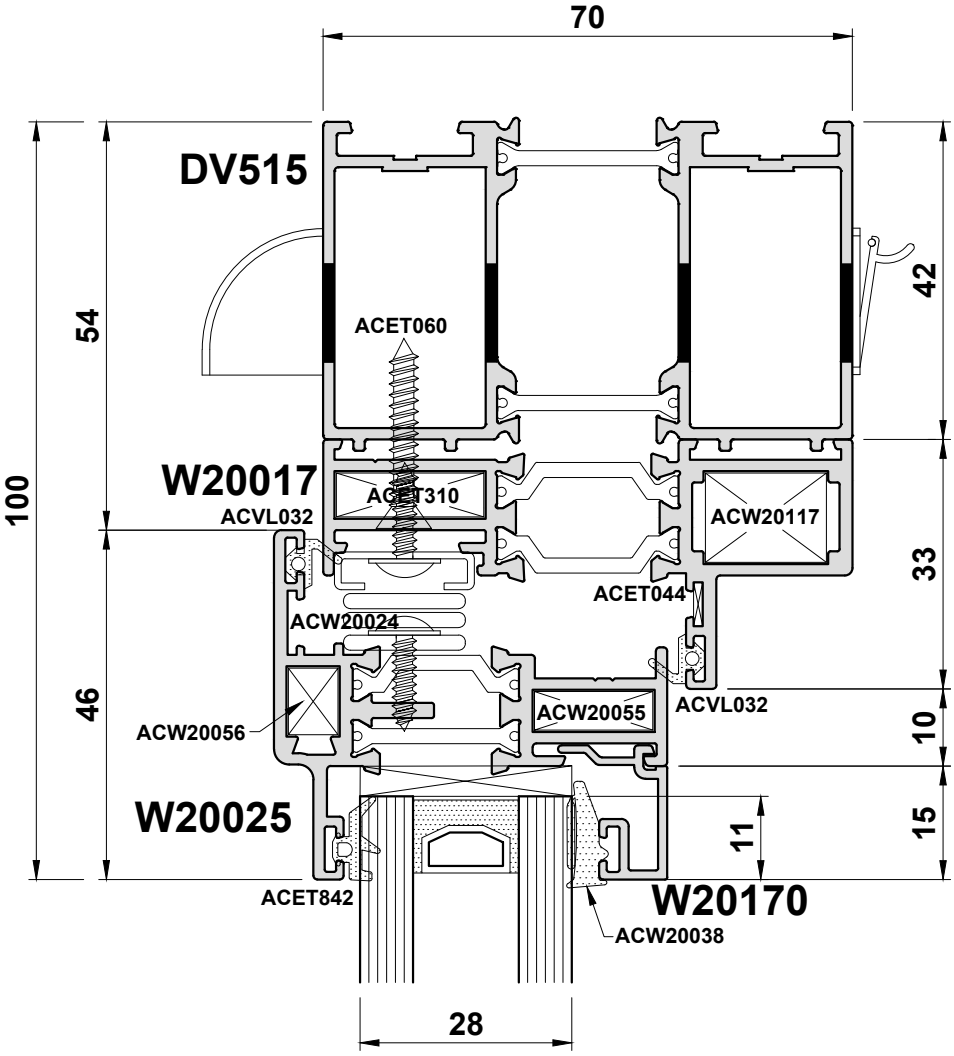

Do Not Scale From This Drawing

Detail 3E

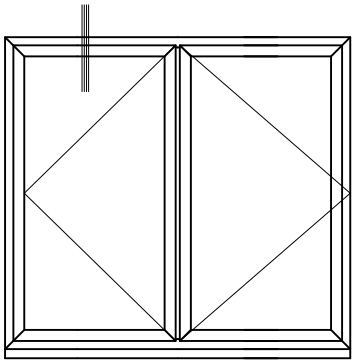

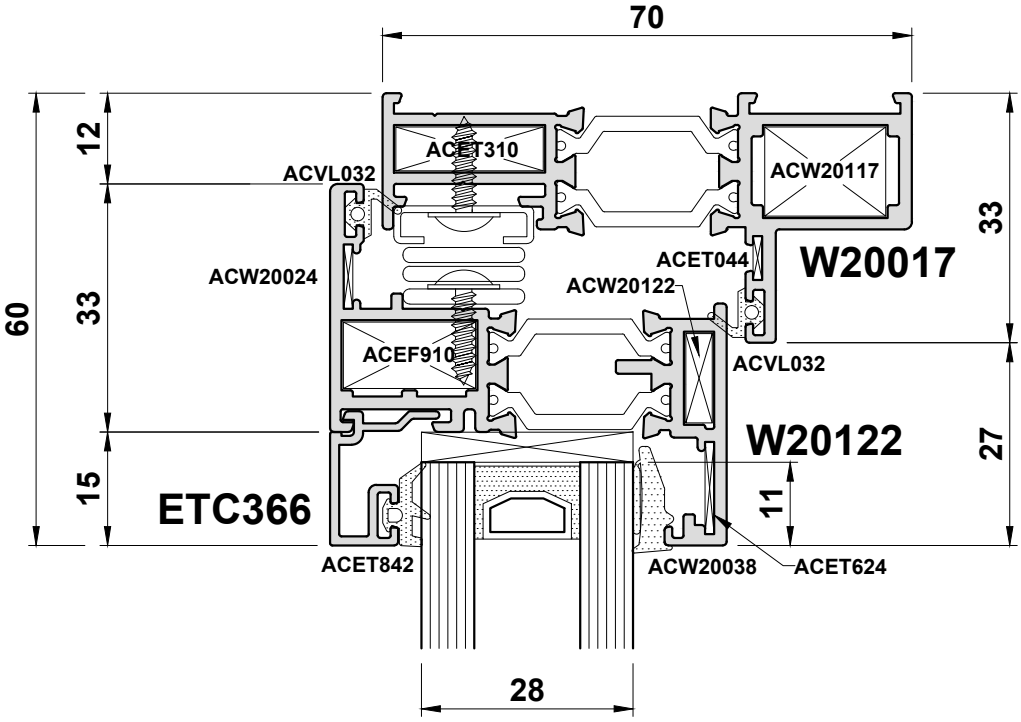

Do Not Scale From This Drawing

Detail 3F

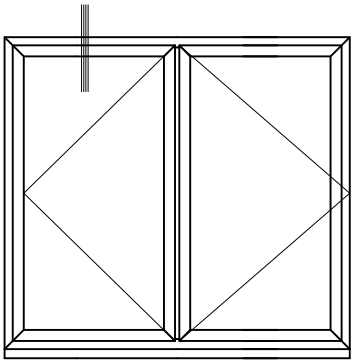

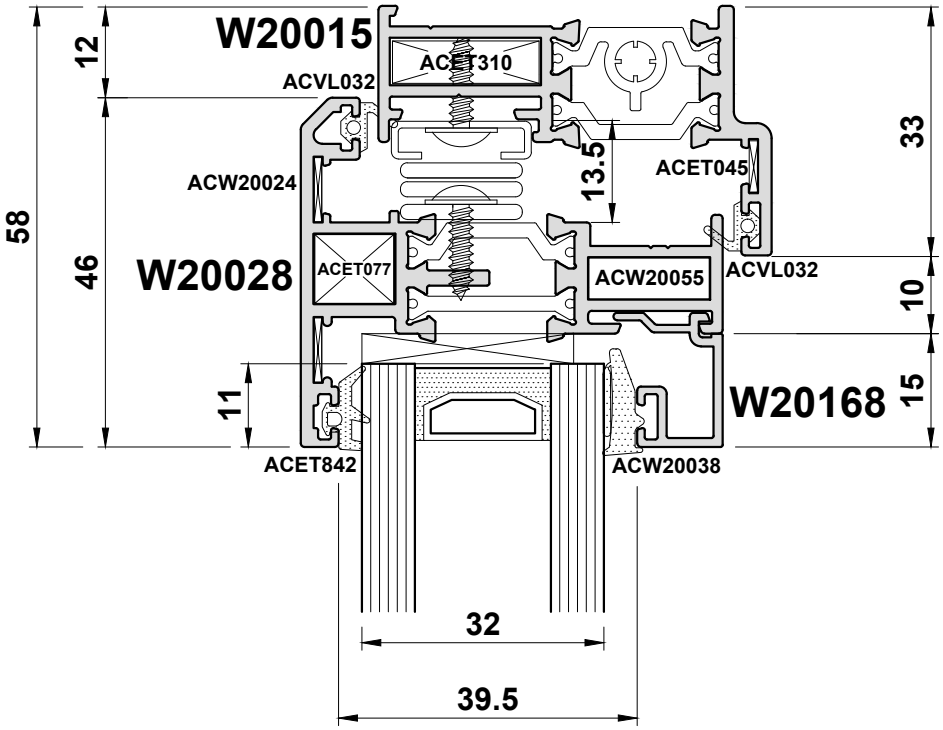

Do Not Scale From This Drawing

Detail 3G

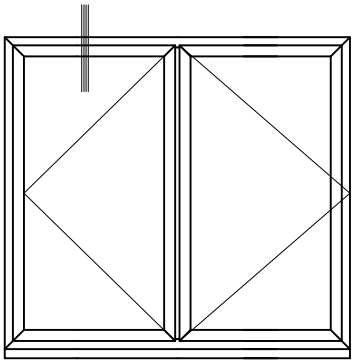

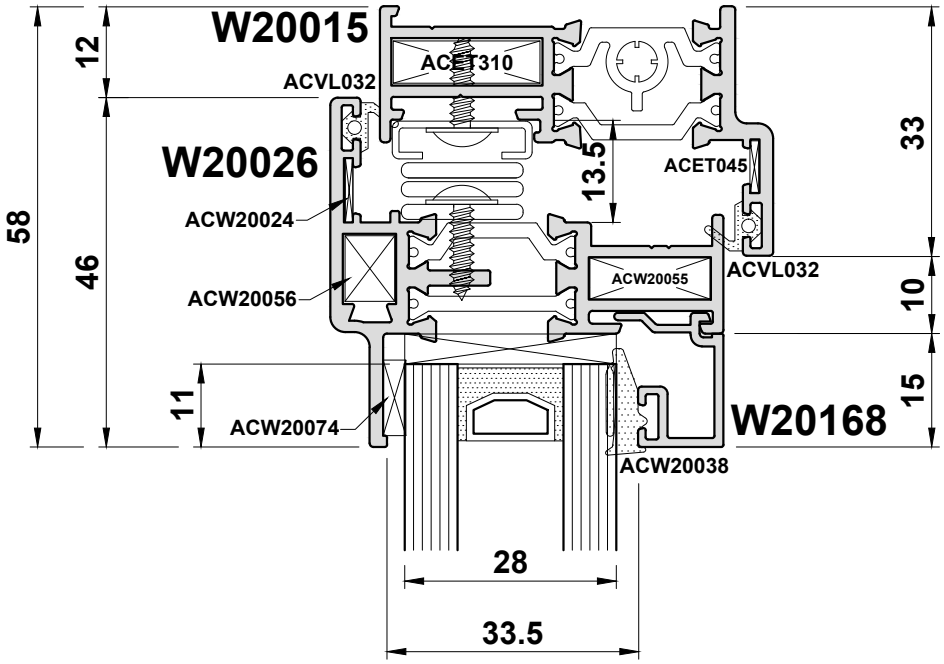

Do Not Scale From This Drawing

Detail 3H

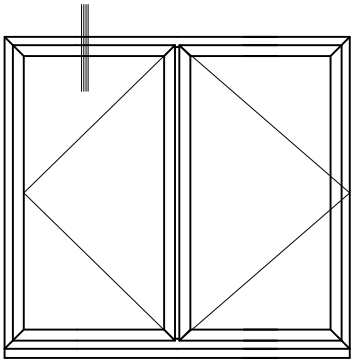

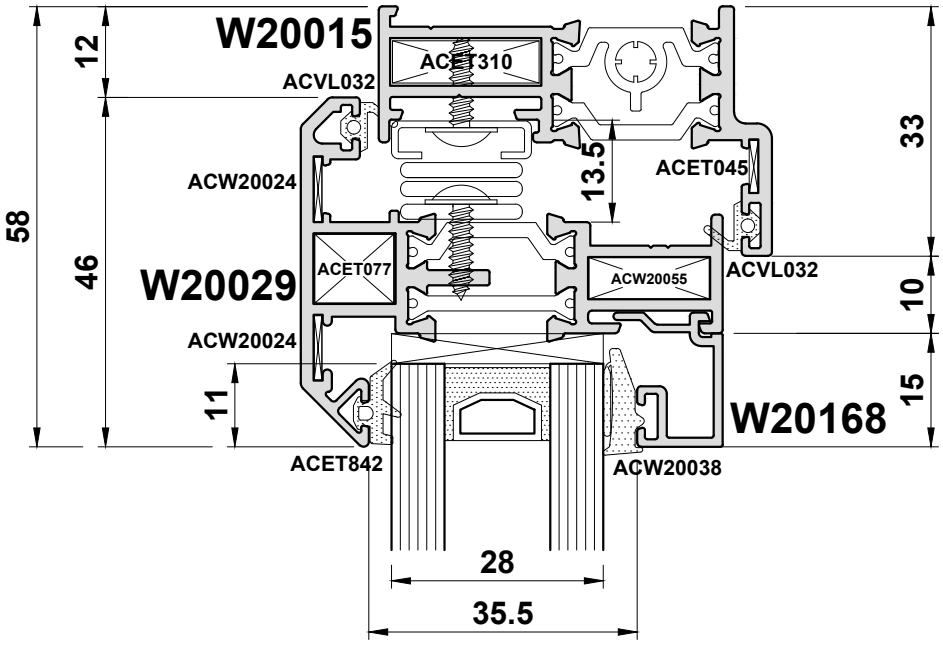

Do Not Scale From This Drawing

Detail 4A

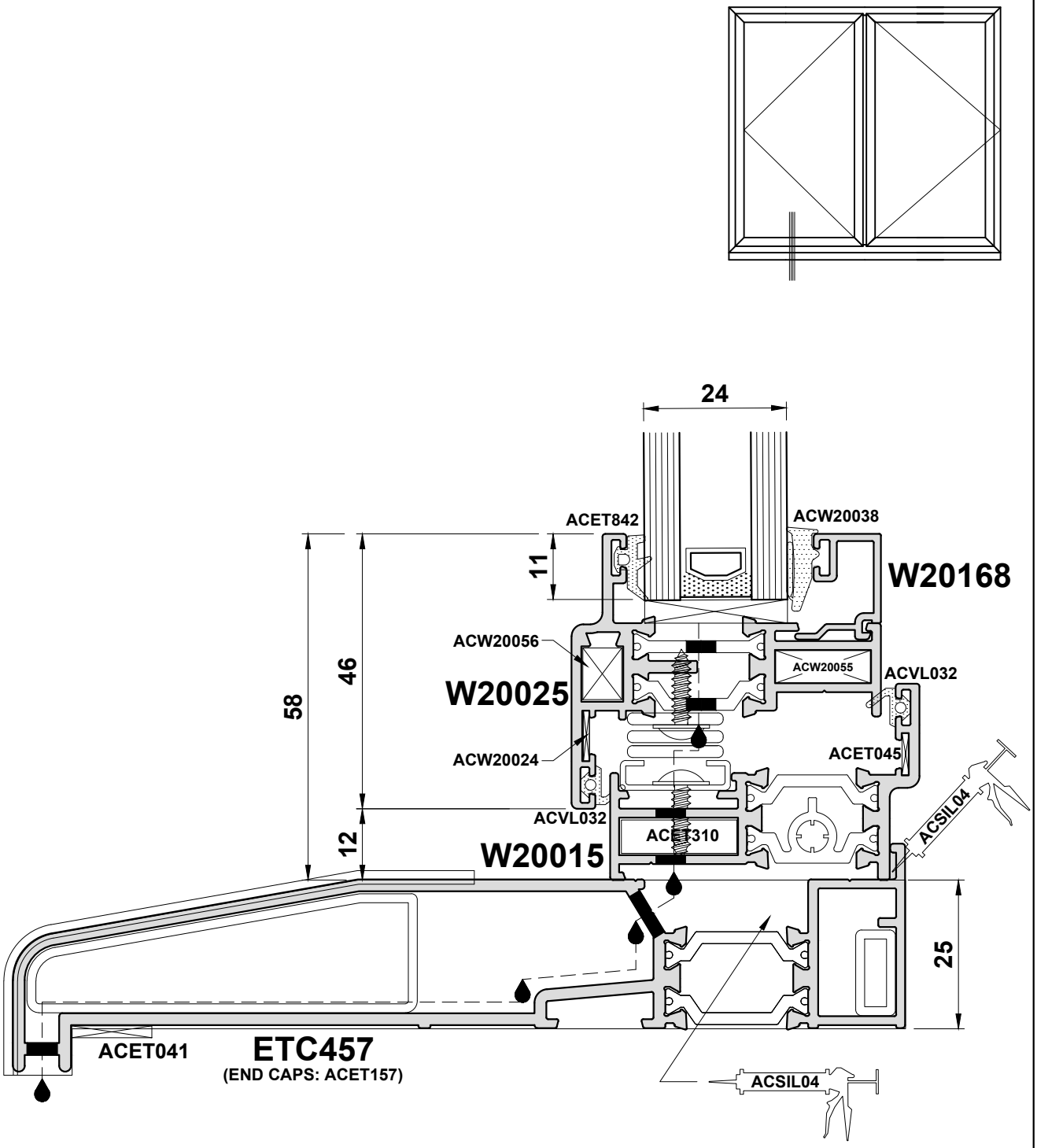

Do Not Scale From This Drawing

Detail 4B

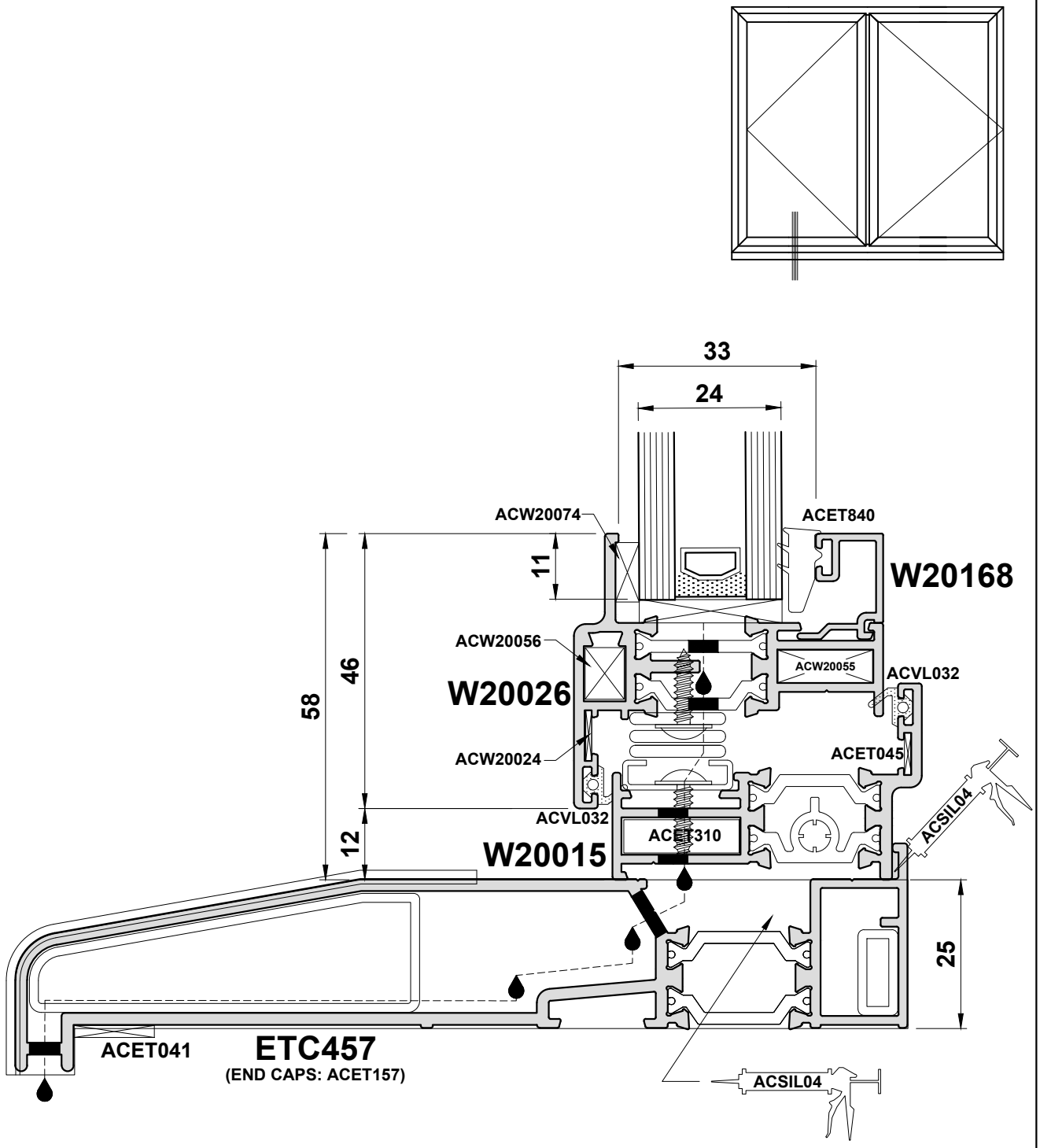

Do Not Scale From This Drawing

Detail 4C

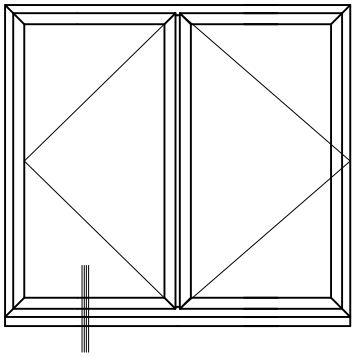

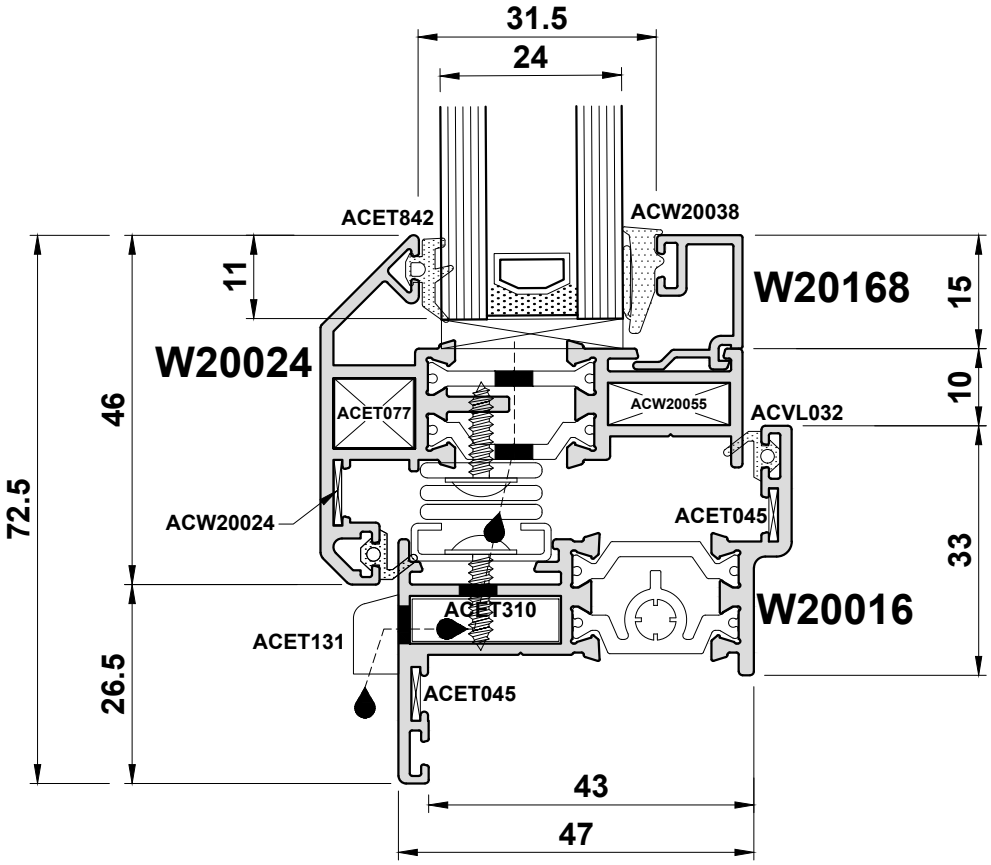

Do Not Scale From This Drawing

Detail 4D

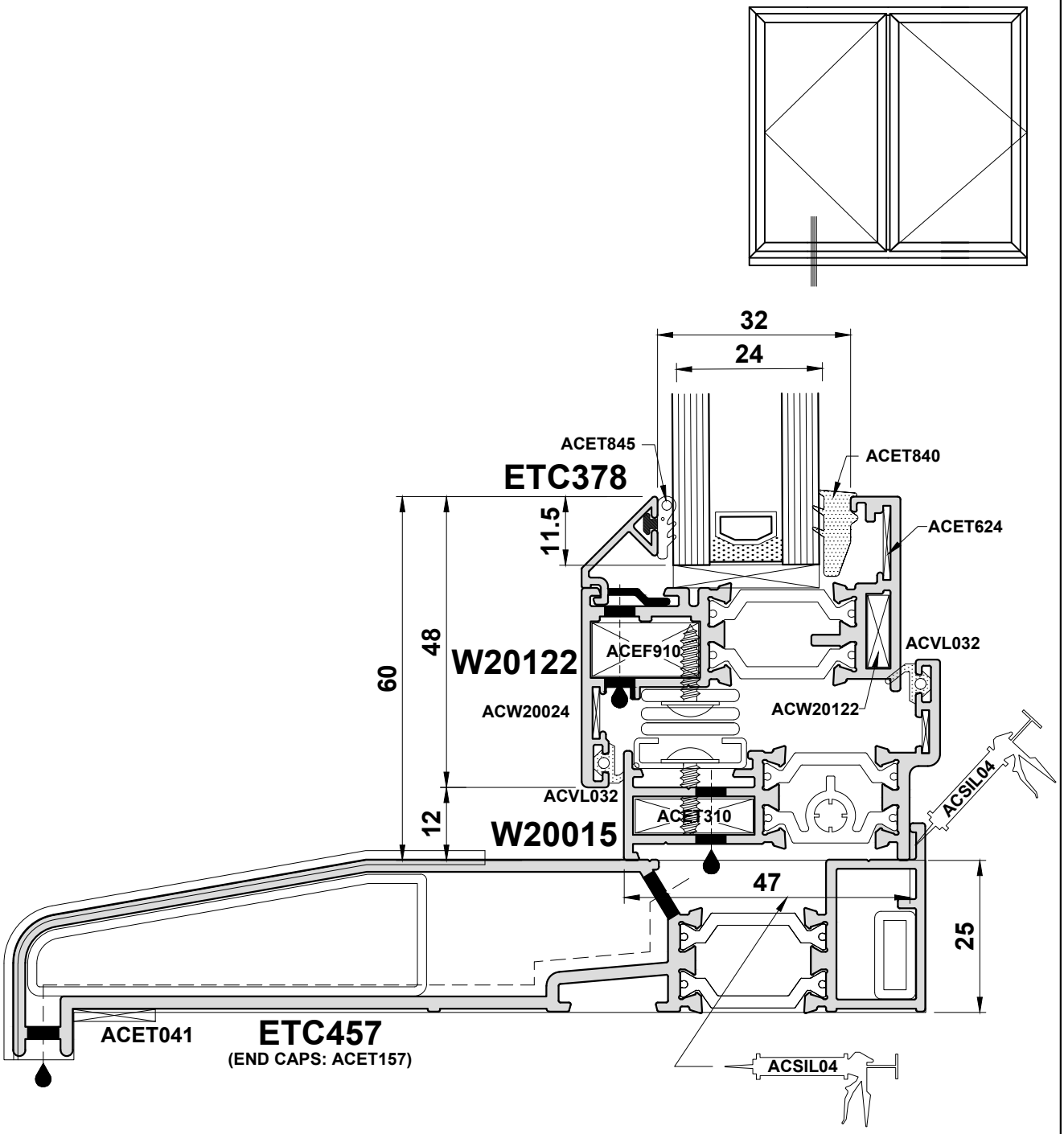

Do Not Scale From This Drawing

Detail 4E

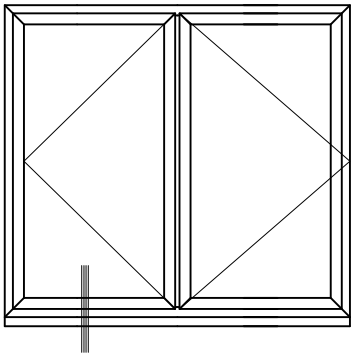

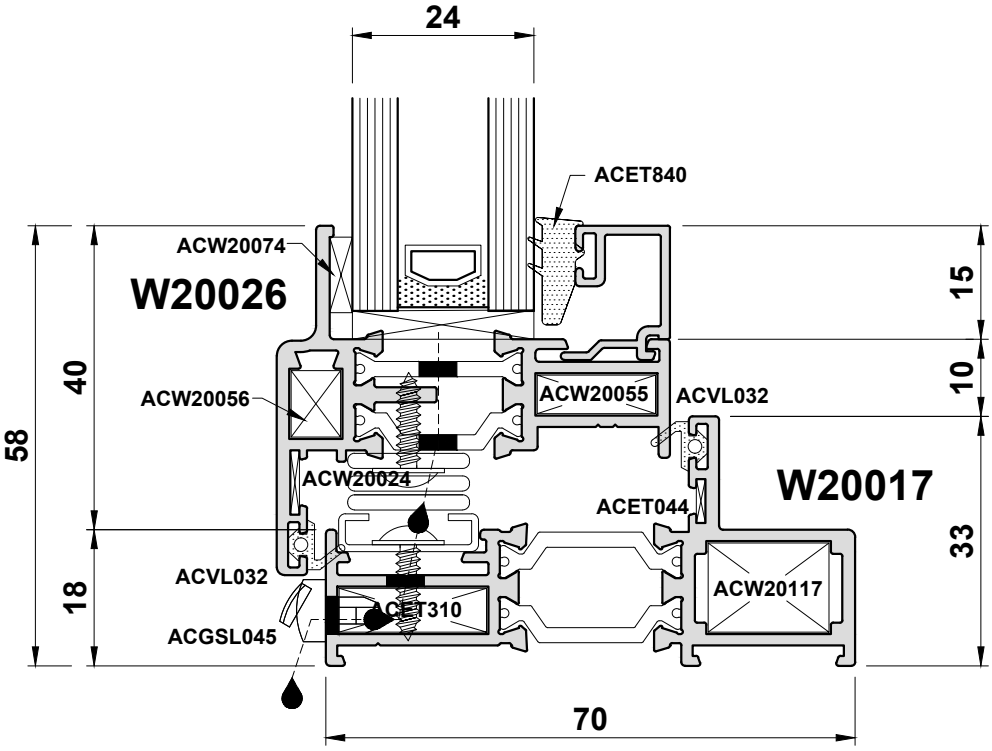

Do Not Scale From This Drawing

Detail 5

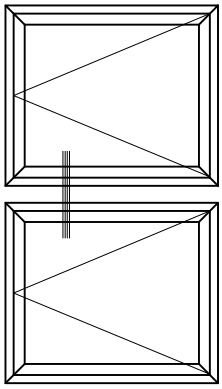

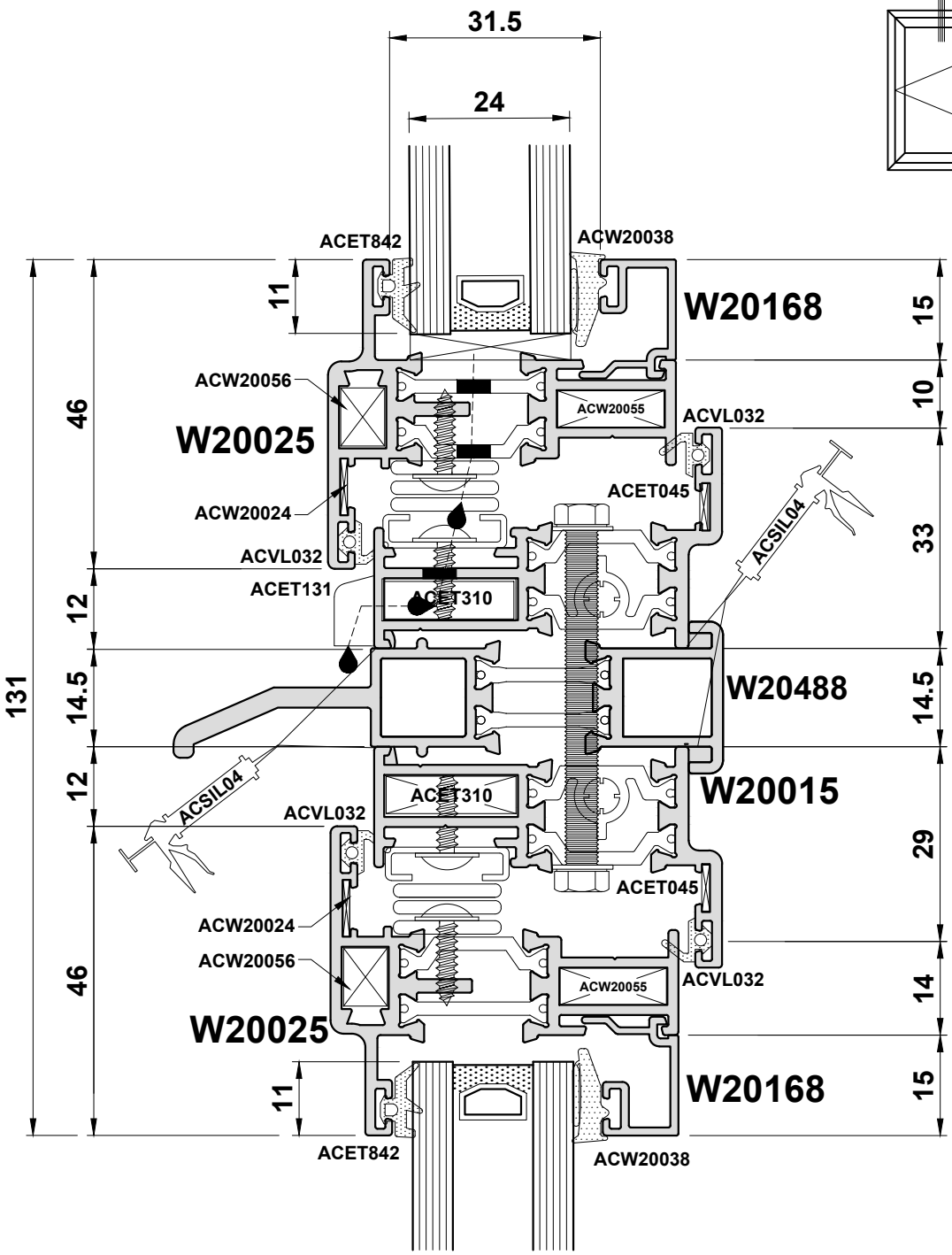

Do Not Scale From This Drawing

Detail 6

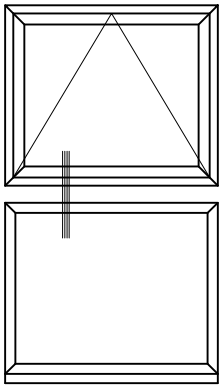

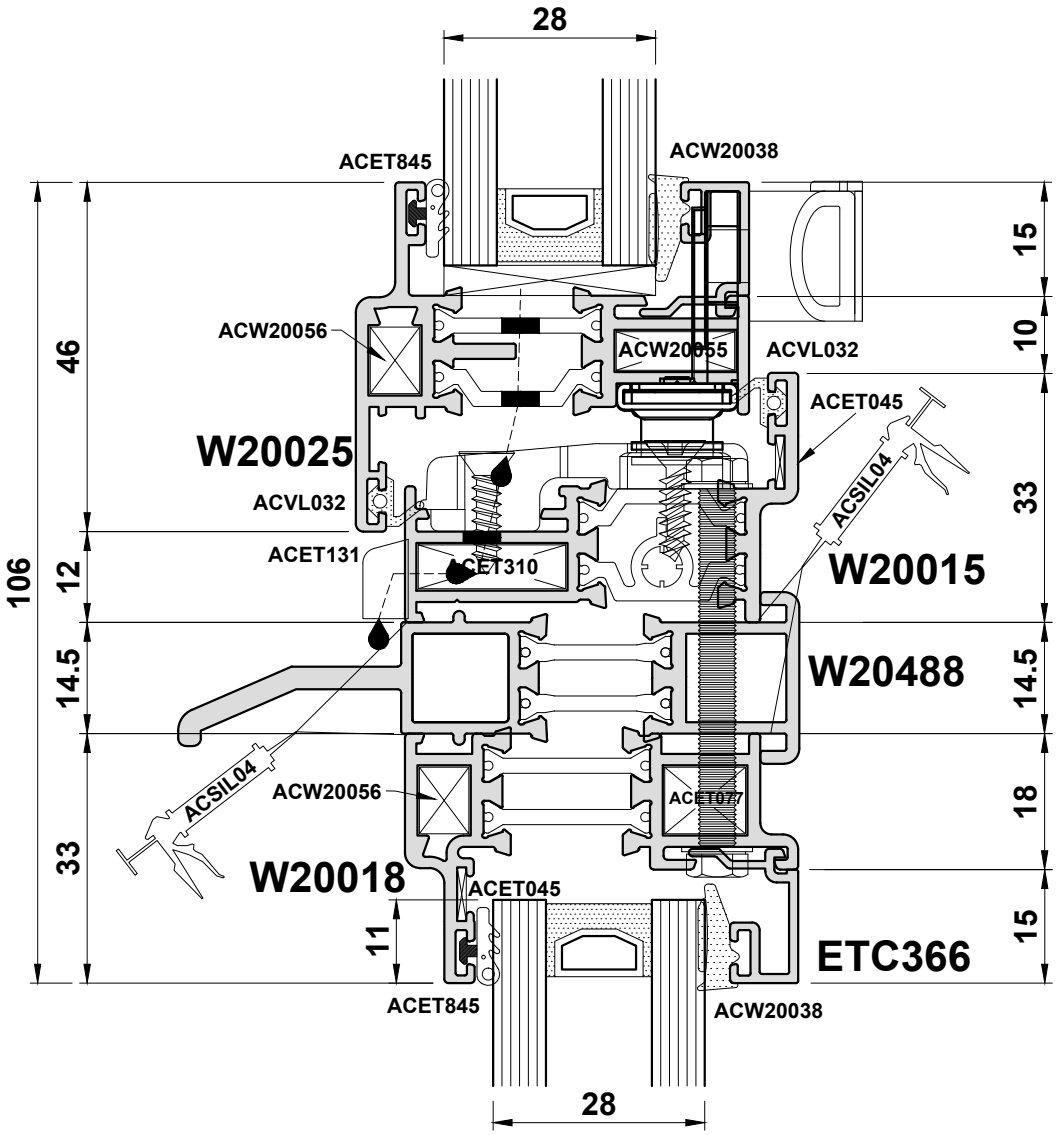

Do Not Scale From This Drawing

Detail 7

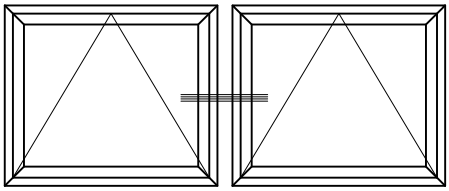

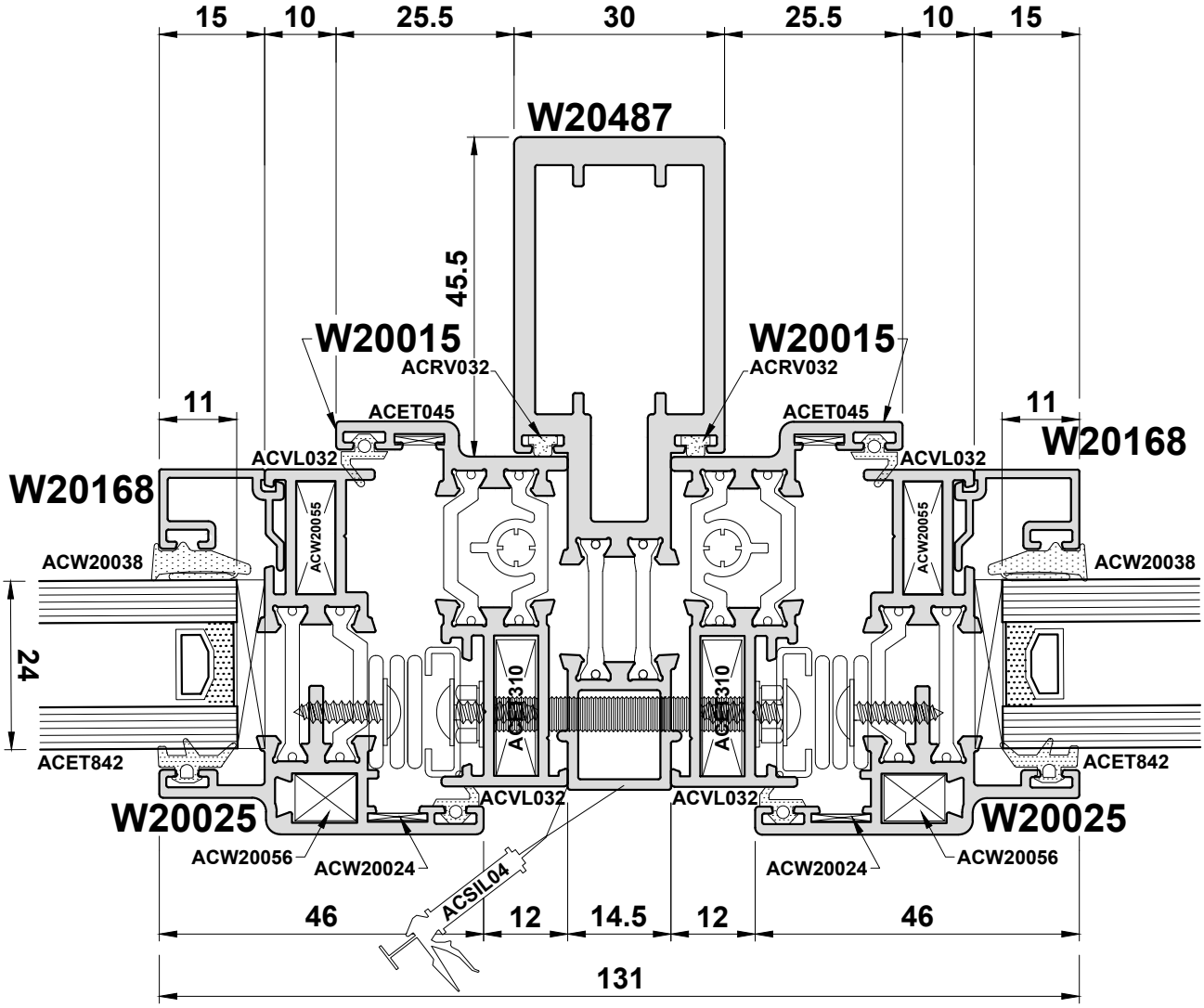

Do Not Scale From This Drawing

Detail 8

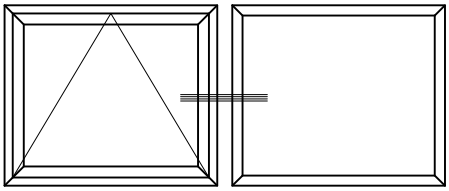

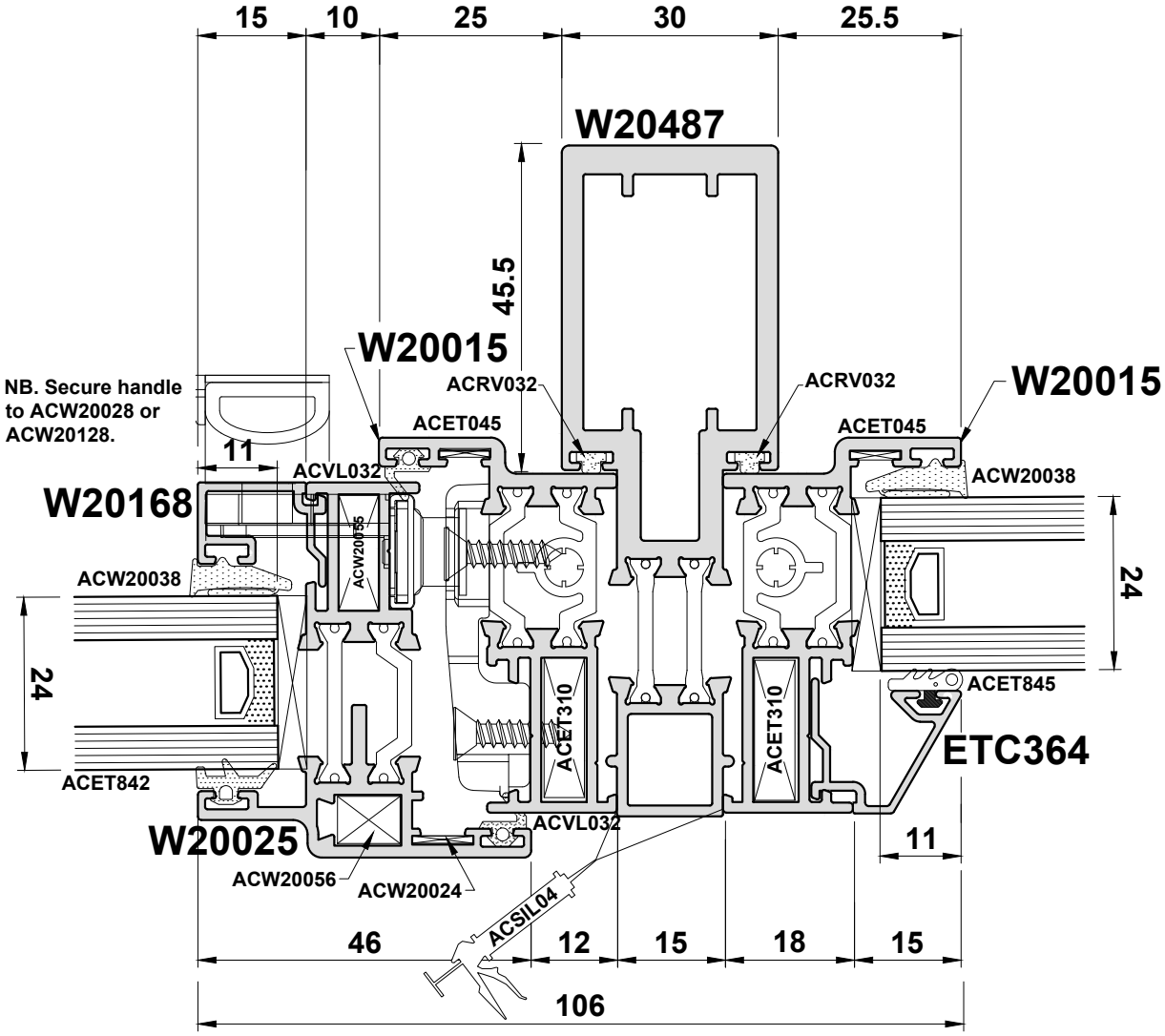

Coupler fixing not shown for clarity

Do Not Scale From This Drawing

Detail 8A

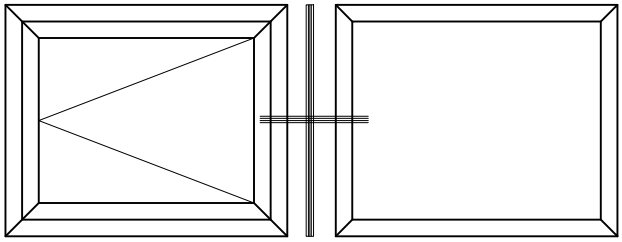

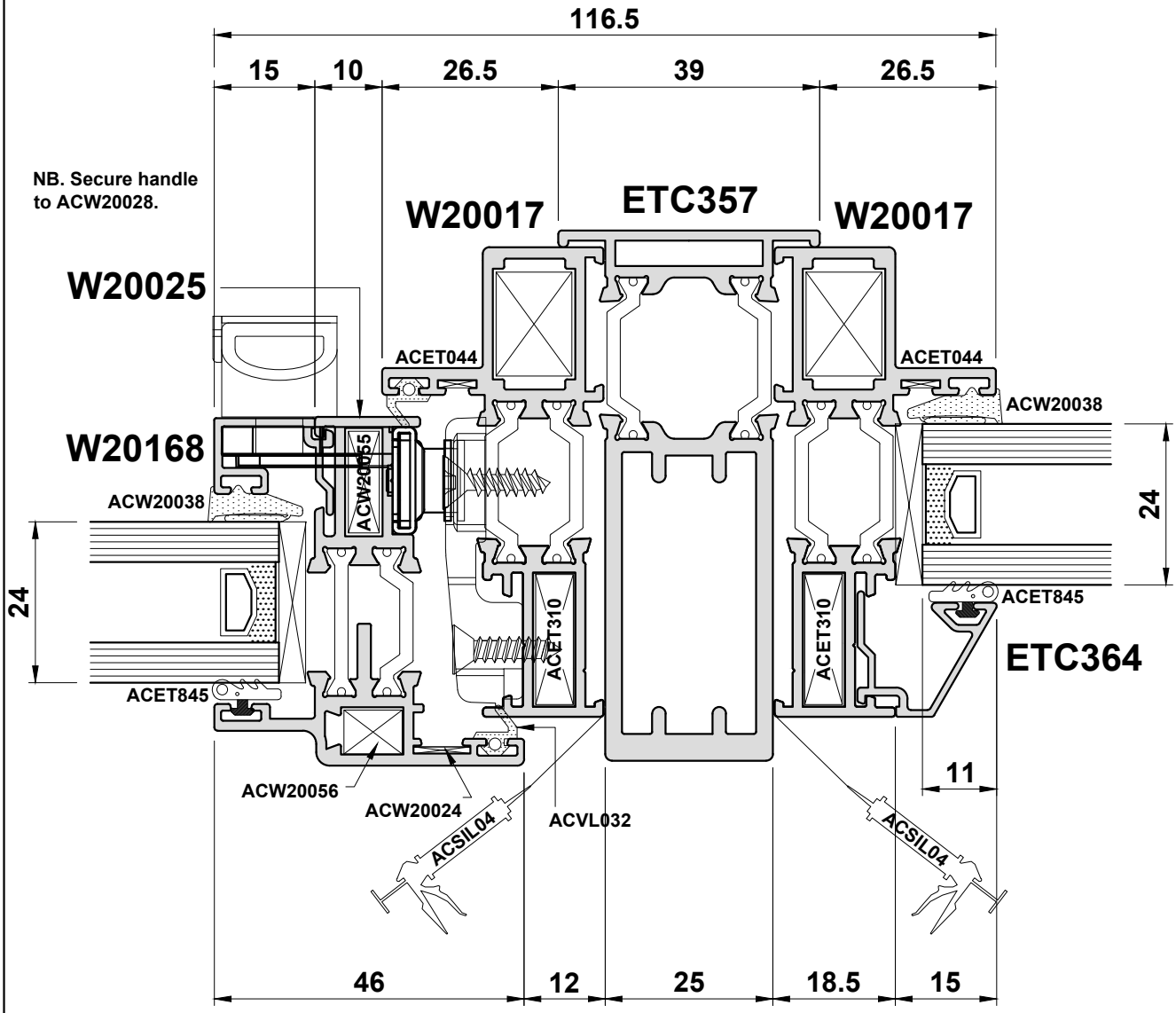

*Coupler fixing not shown for clarity

Do Not Scale From This Drawing

Detail 9

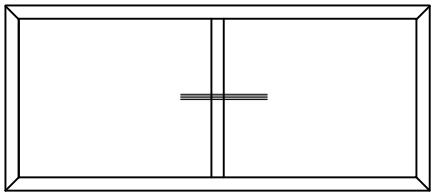

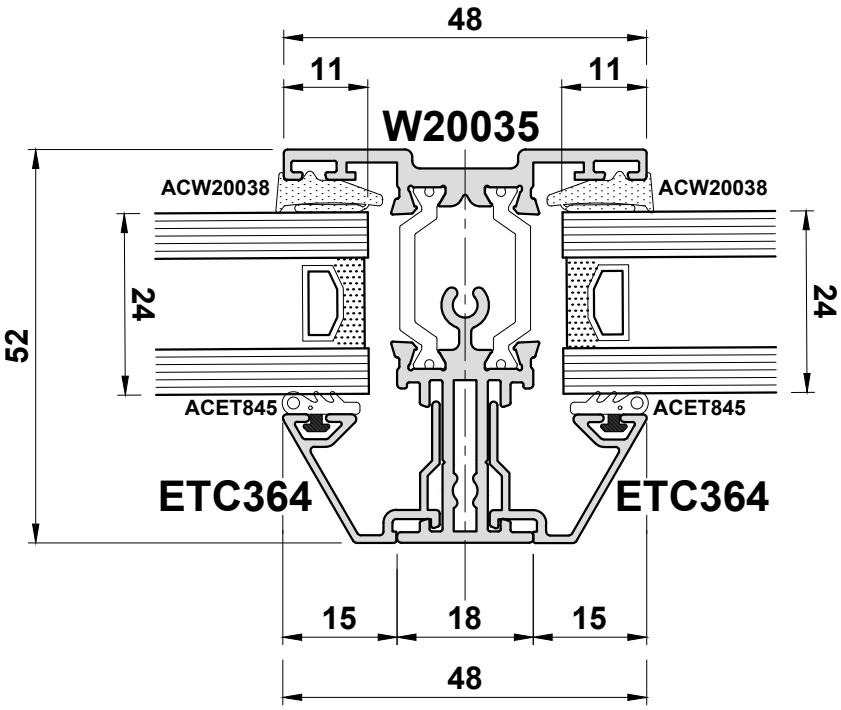

Do Not Scale From This Drawing

Detail 10A

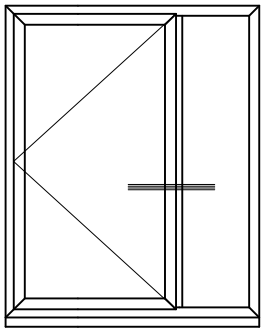

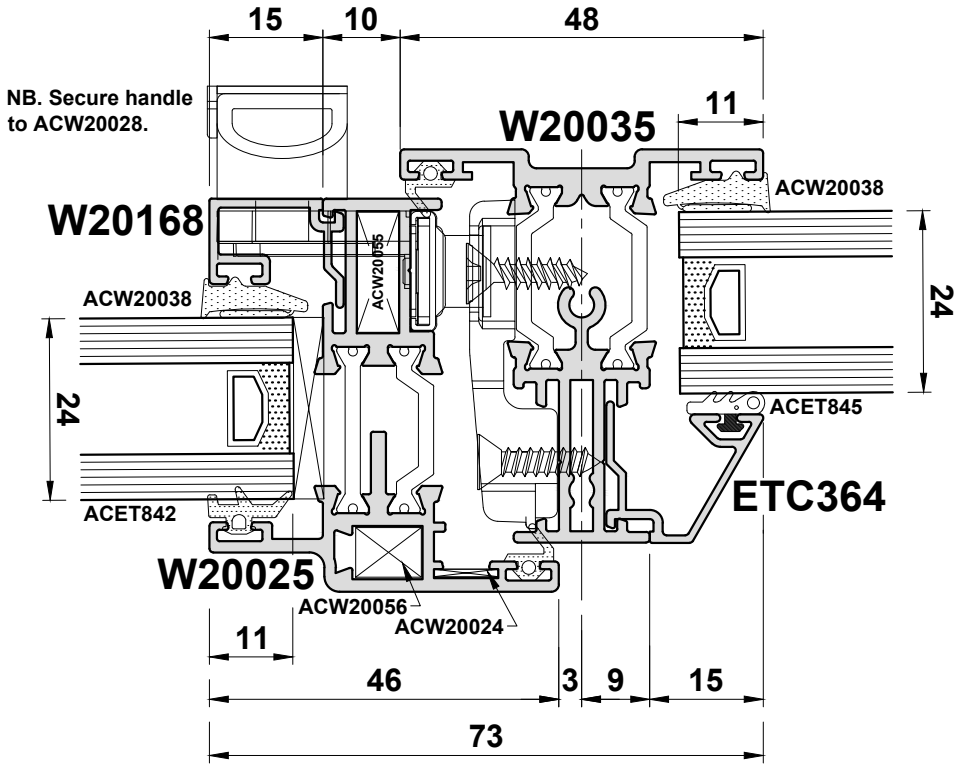

Do Not Scale From This Drawing

Detail 10B

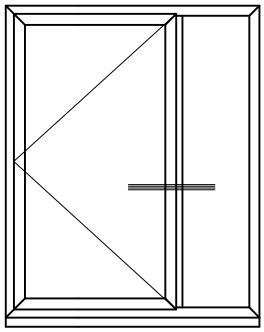

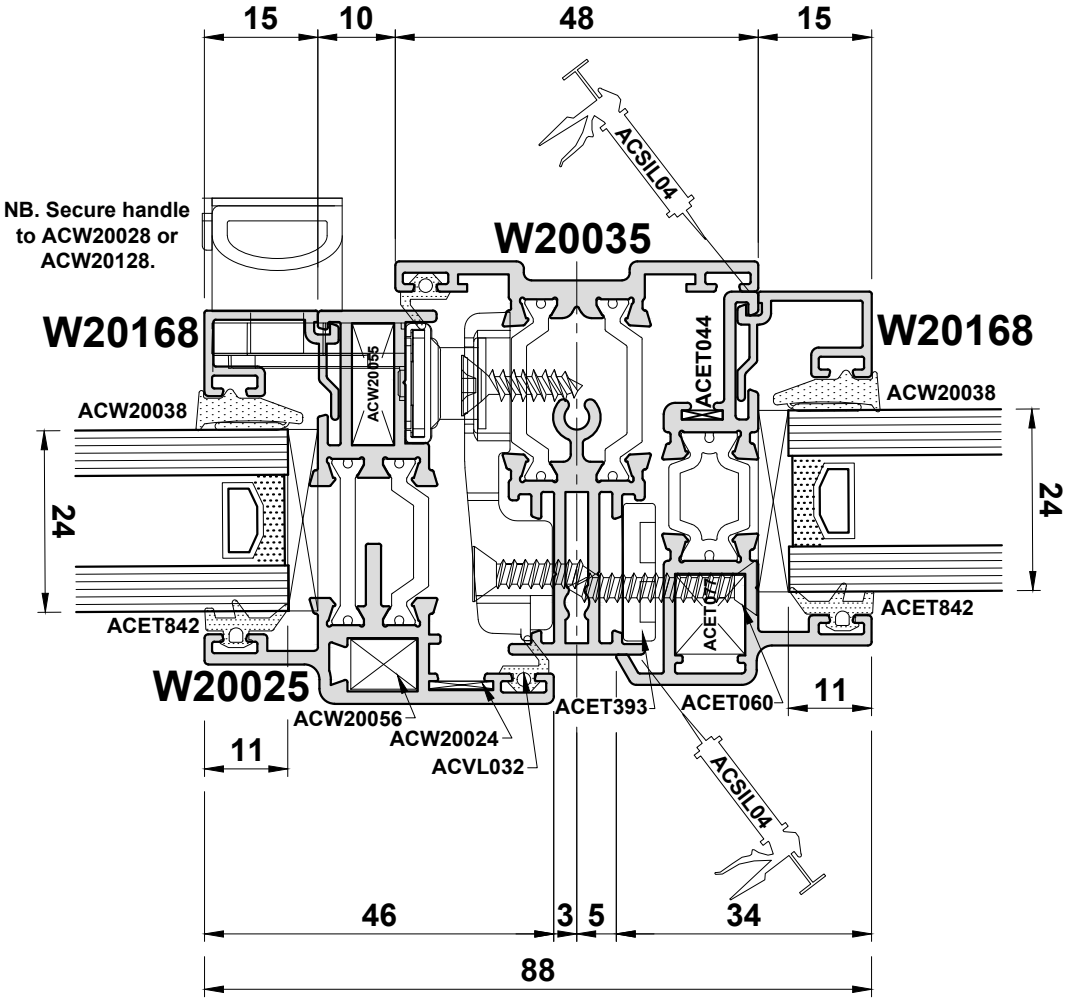

Do Not Scale From This Drawing

Detail 11A

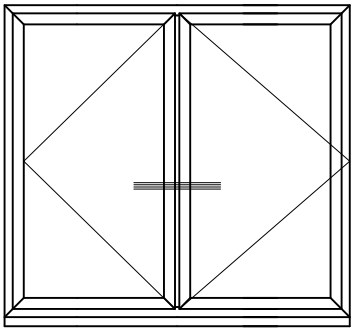

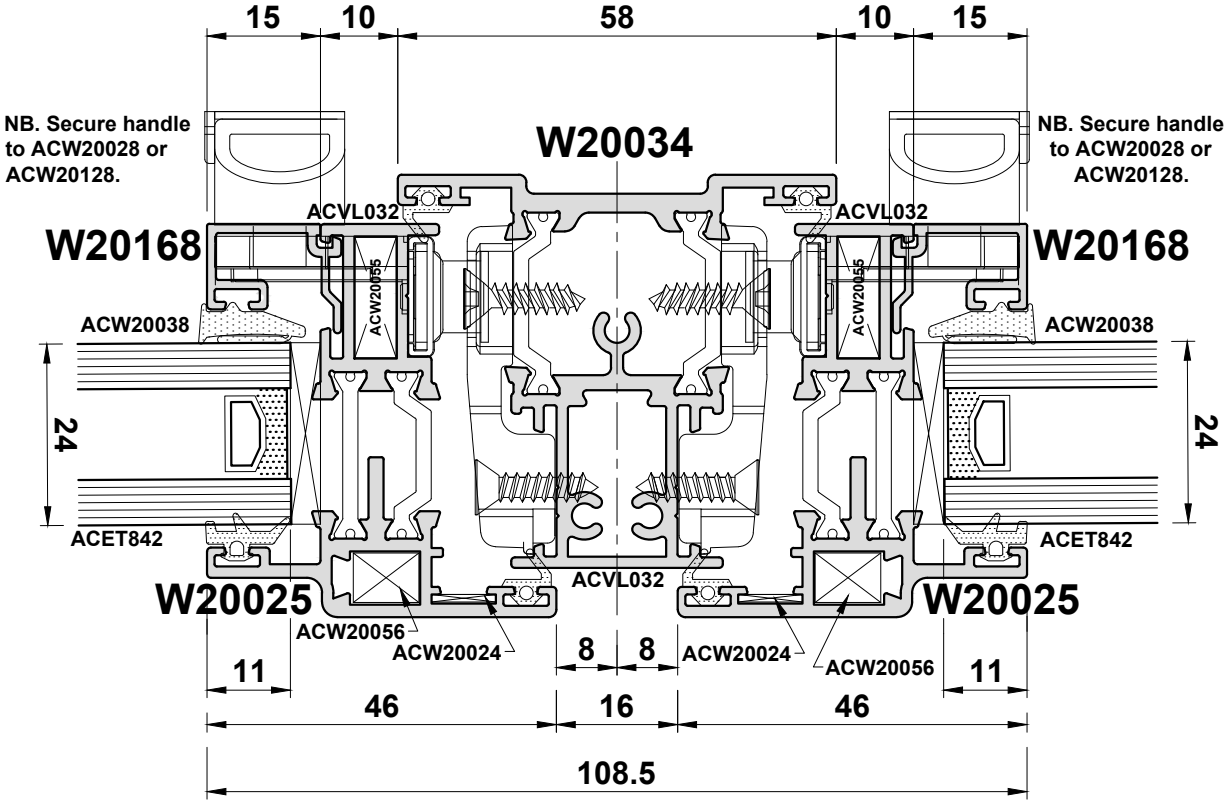

Do Not Scale From This Drawing

Detail 11B

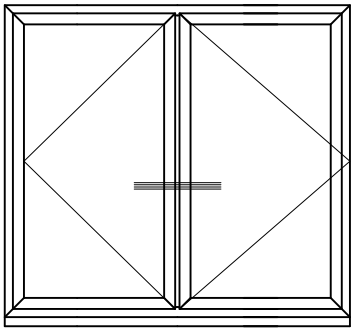

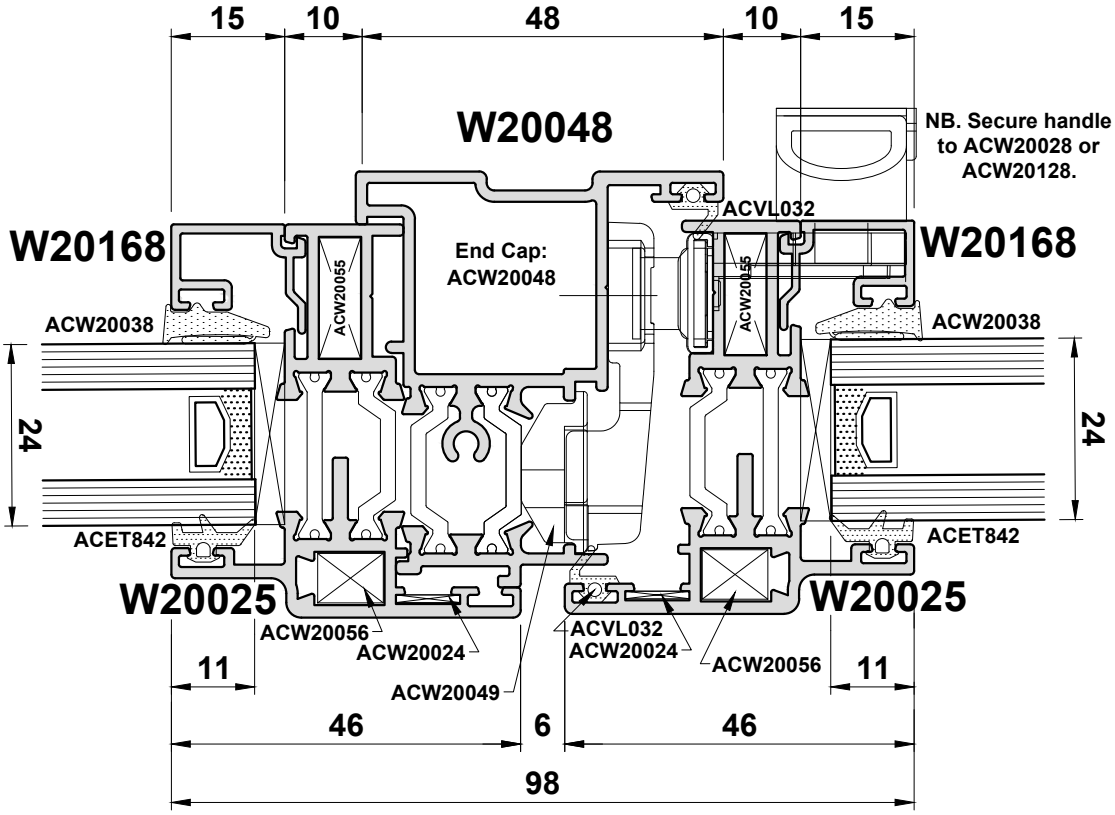

Do Not Scale From This Drawing

Detail 12A

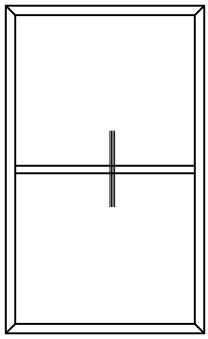

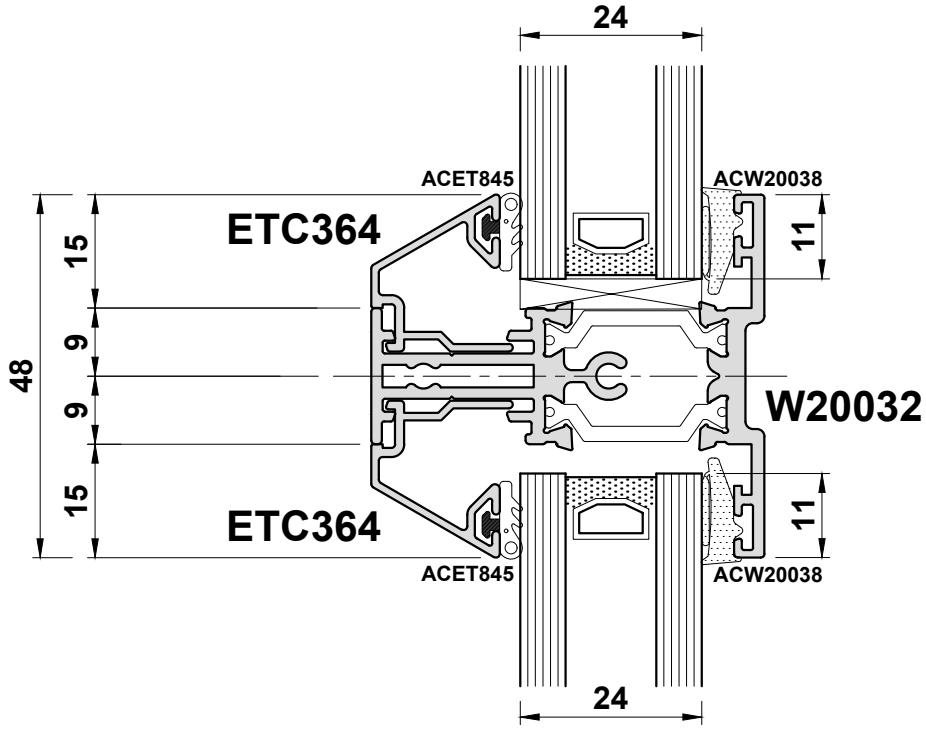

Note: Transoms will drain through the join to the outerframe.

Do Not Scale From This Drawing

Detail 12B

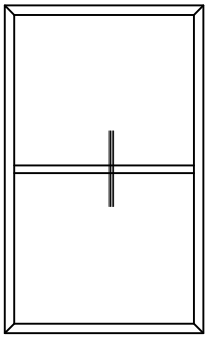

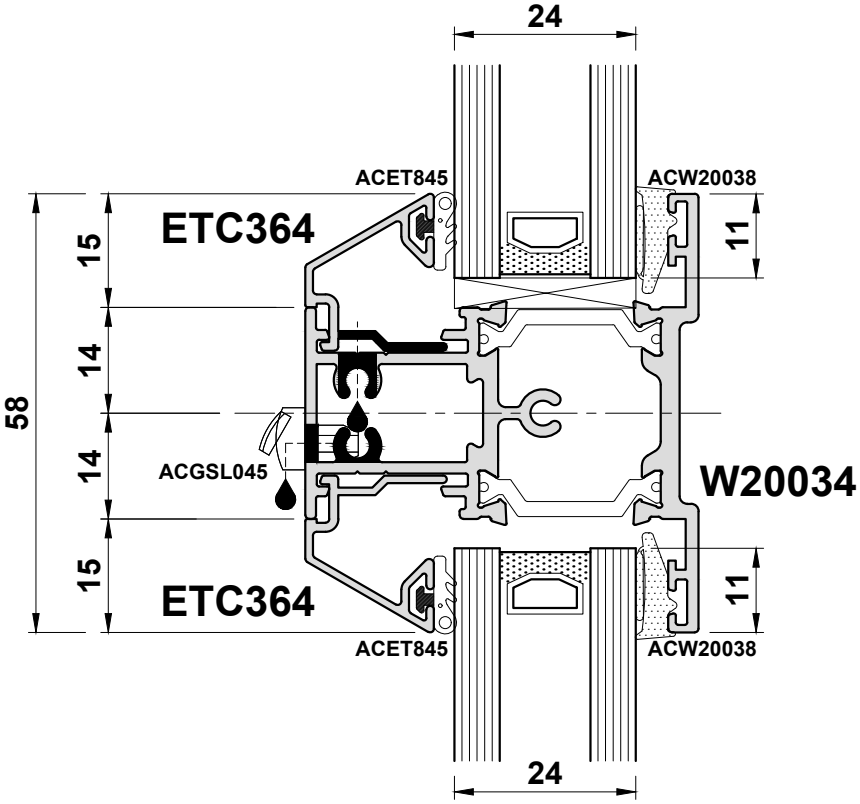

Note: Transoms will drain through the join to the outerframe.

Do Not Scale From This Drawing

Detail 12C

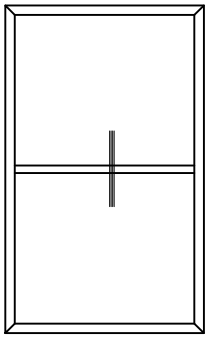

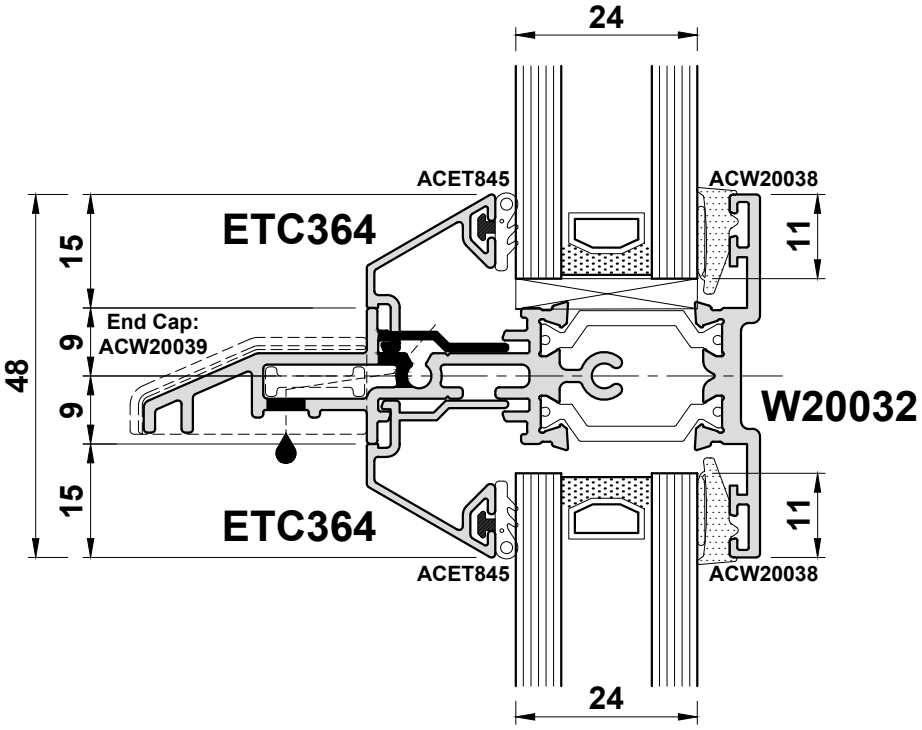

Note: Transoms will drain through the join to the outerframe.

Do Not Scale From This Drawing

Detail 13A

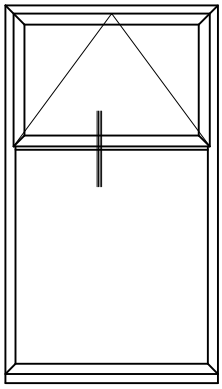

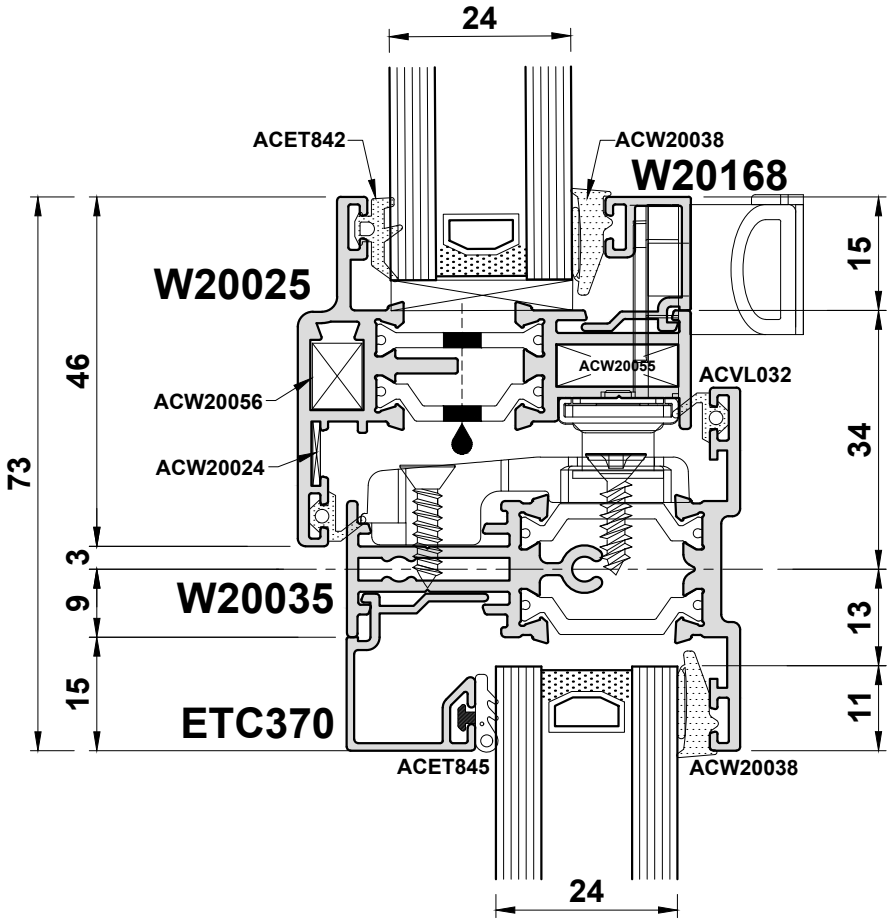

Note: Transoms will drain through the join to the outerframe.

Do Not Scale From This Drawing

Detail 13B

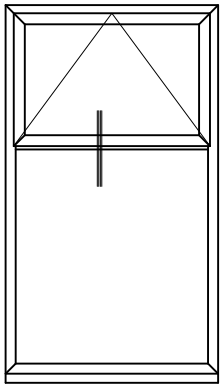

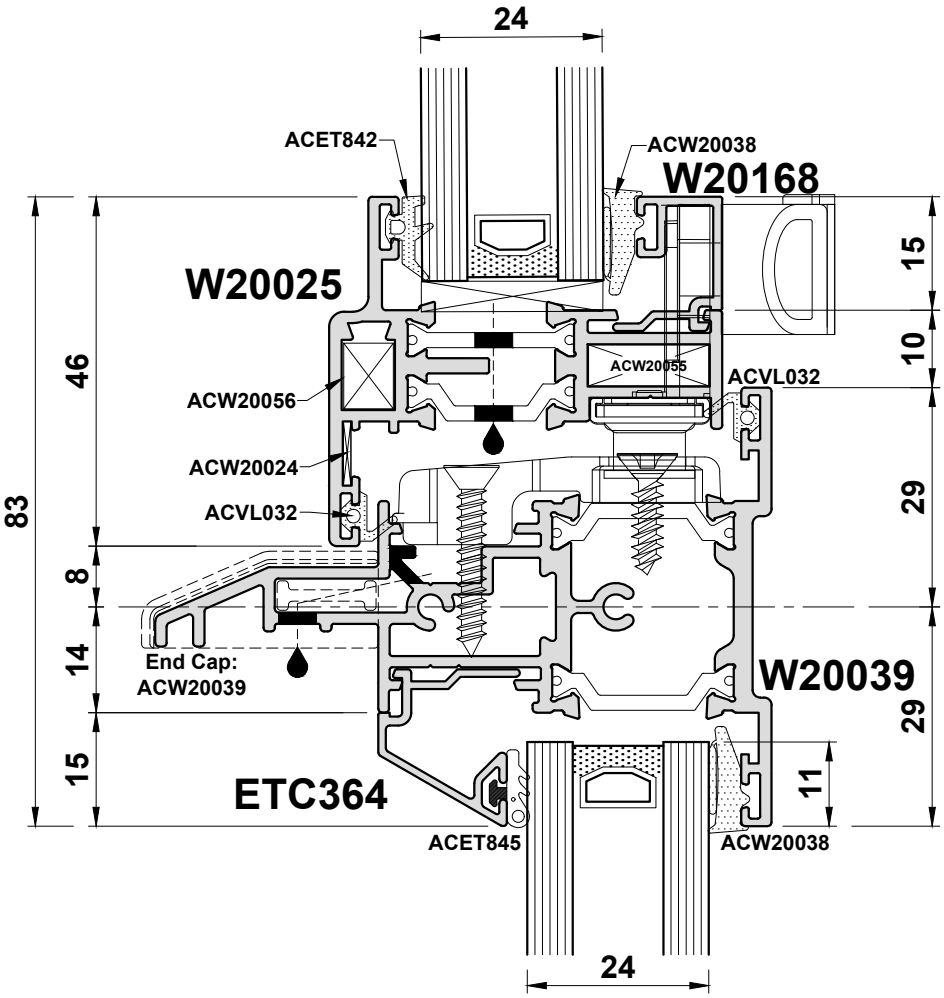

Note: Transoms will drain through the join to the outerframe.

Do Not Scale From This Drawing

Detail 13C

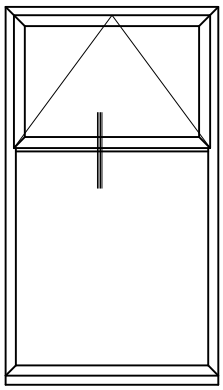

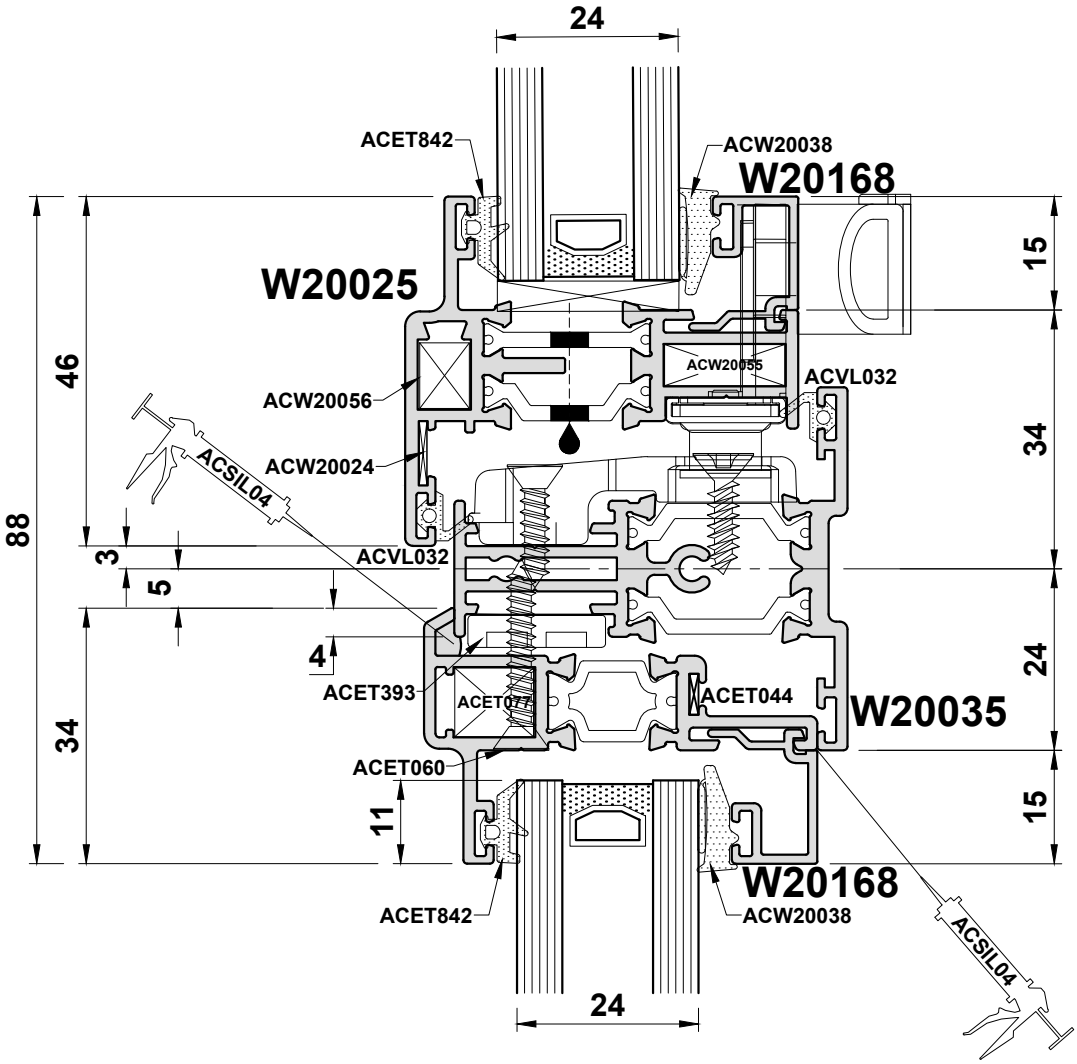

Note: Transoms will drain through the join to the outerframe.

Do Not Scale From This Drawing

Detail 13D

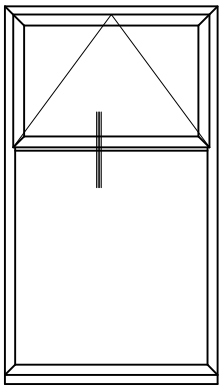

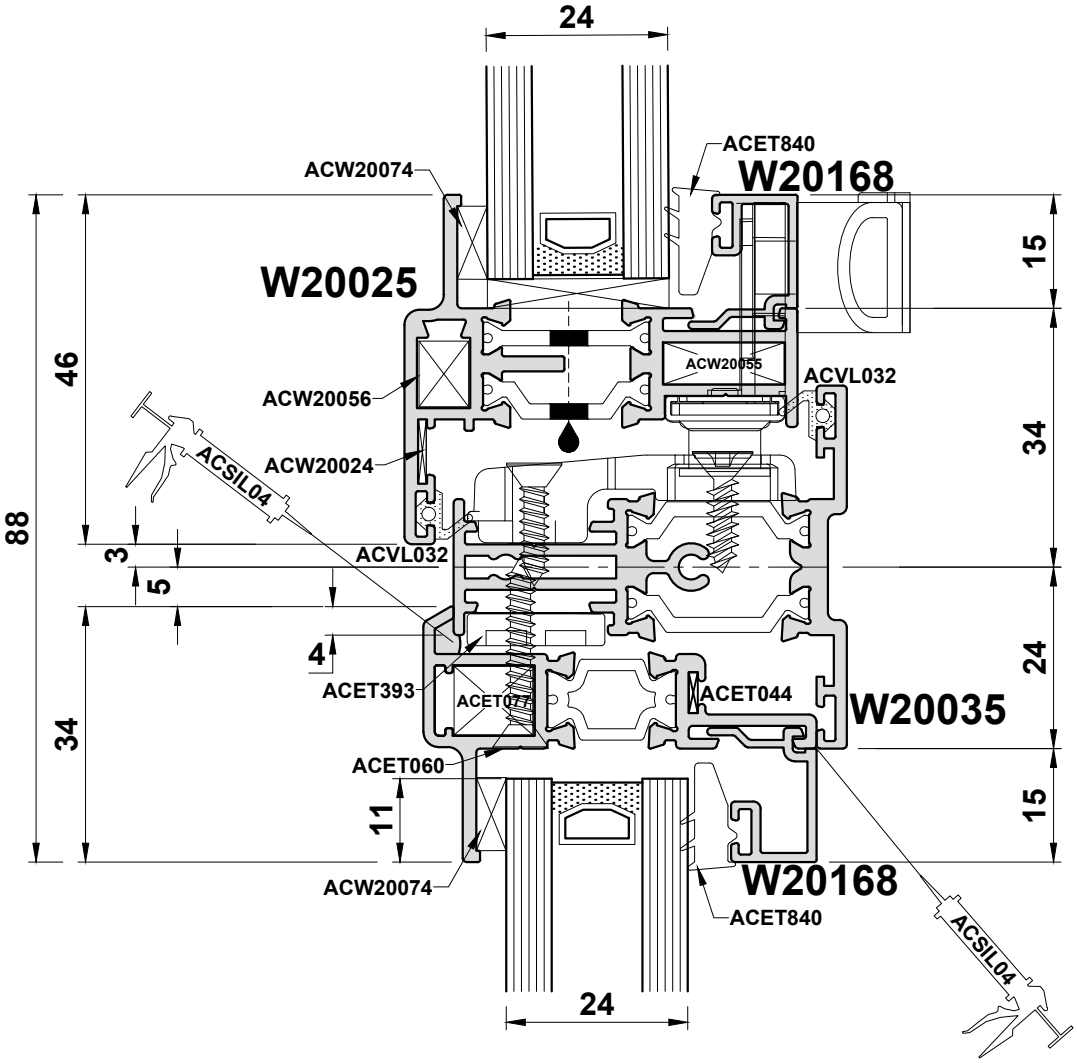

Note: Transoms will drain through the join to the outerframe.

Do Not Scale From This Drawing

Detail 14A

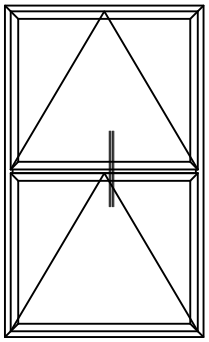

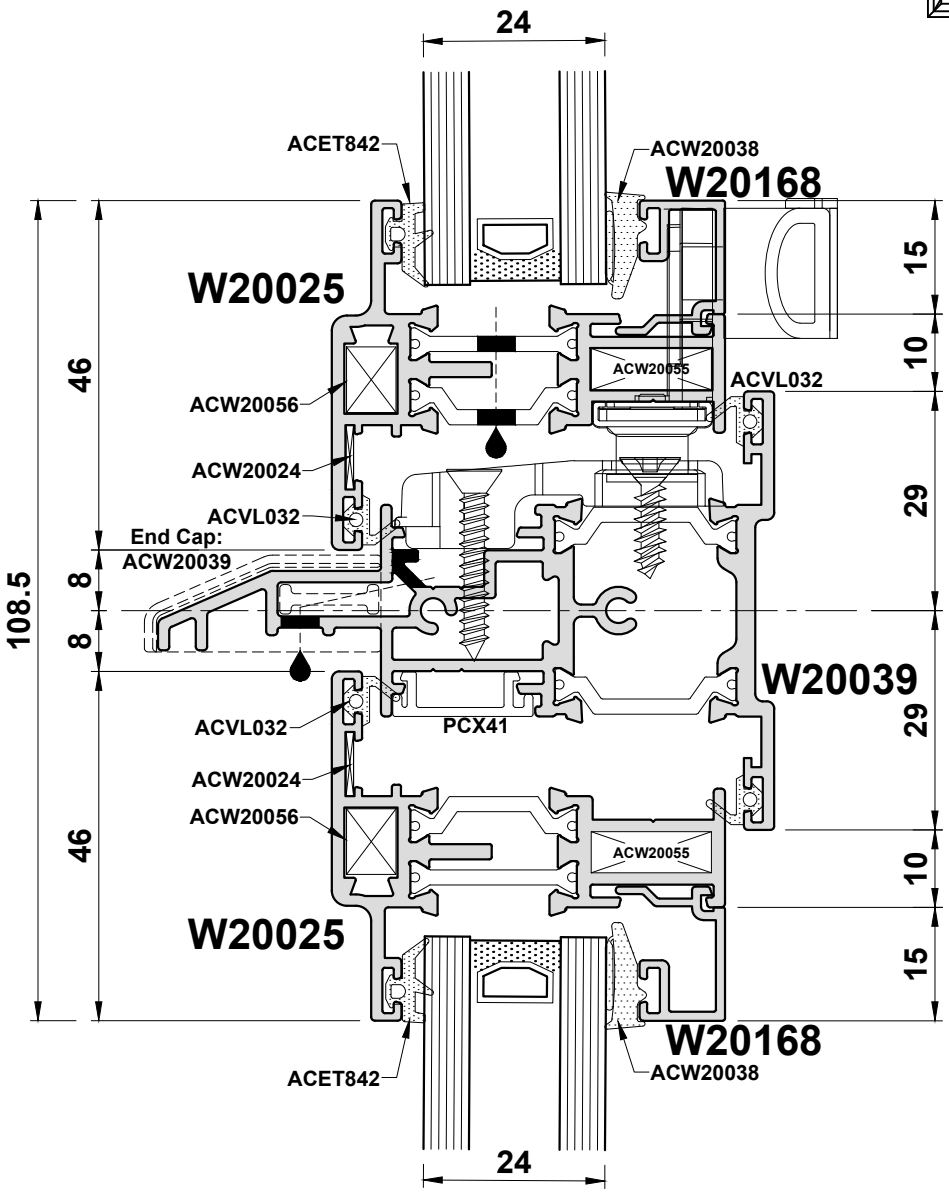

Note: Transoms will drain through the join to the outerframe.

Do Not Scale From This Drawing

Detail 14B

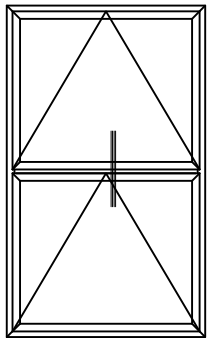

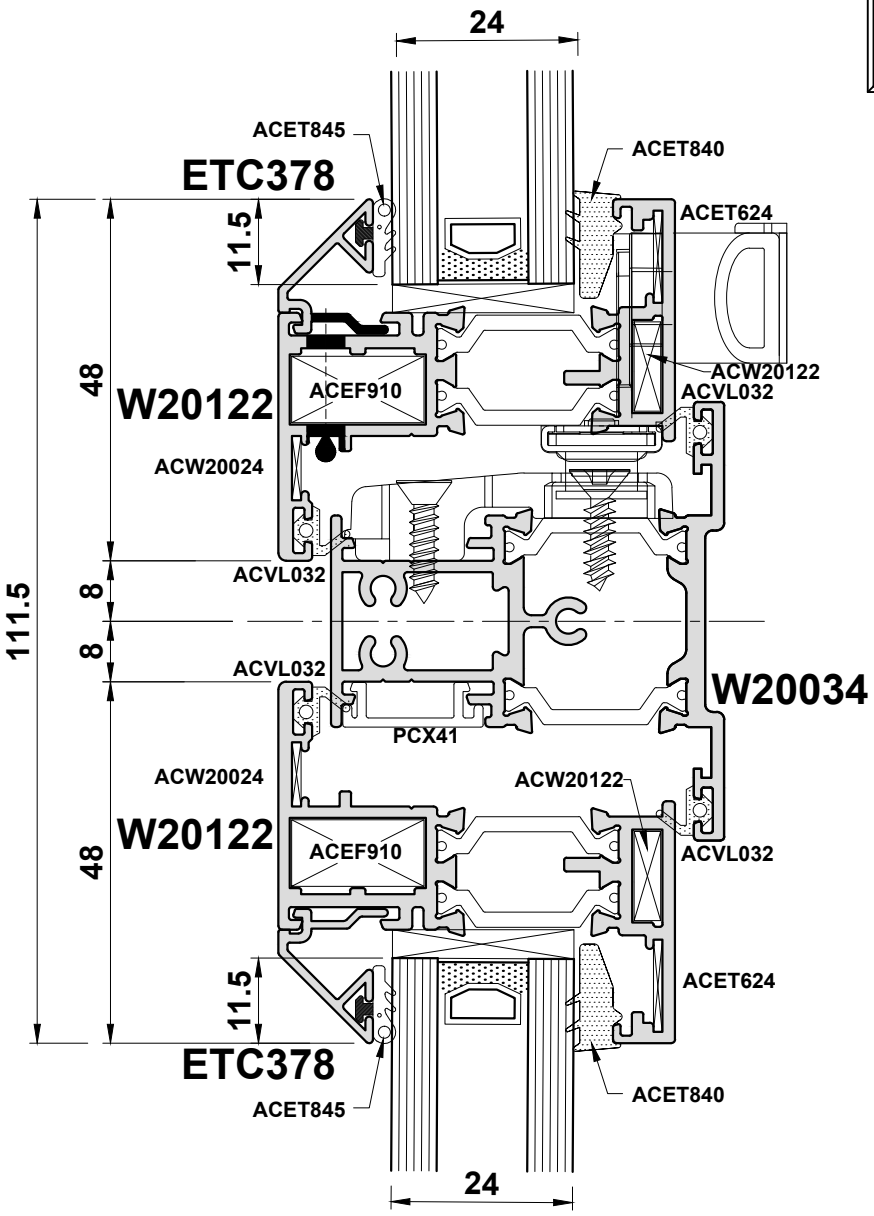

Note: Transoms will drain through the join to the outerframe.

Do Not Scale From This Drawing

Detail 14C

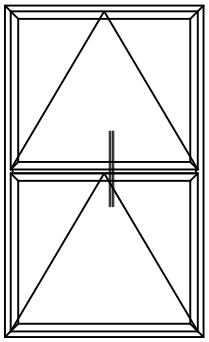

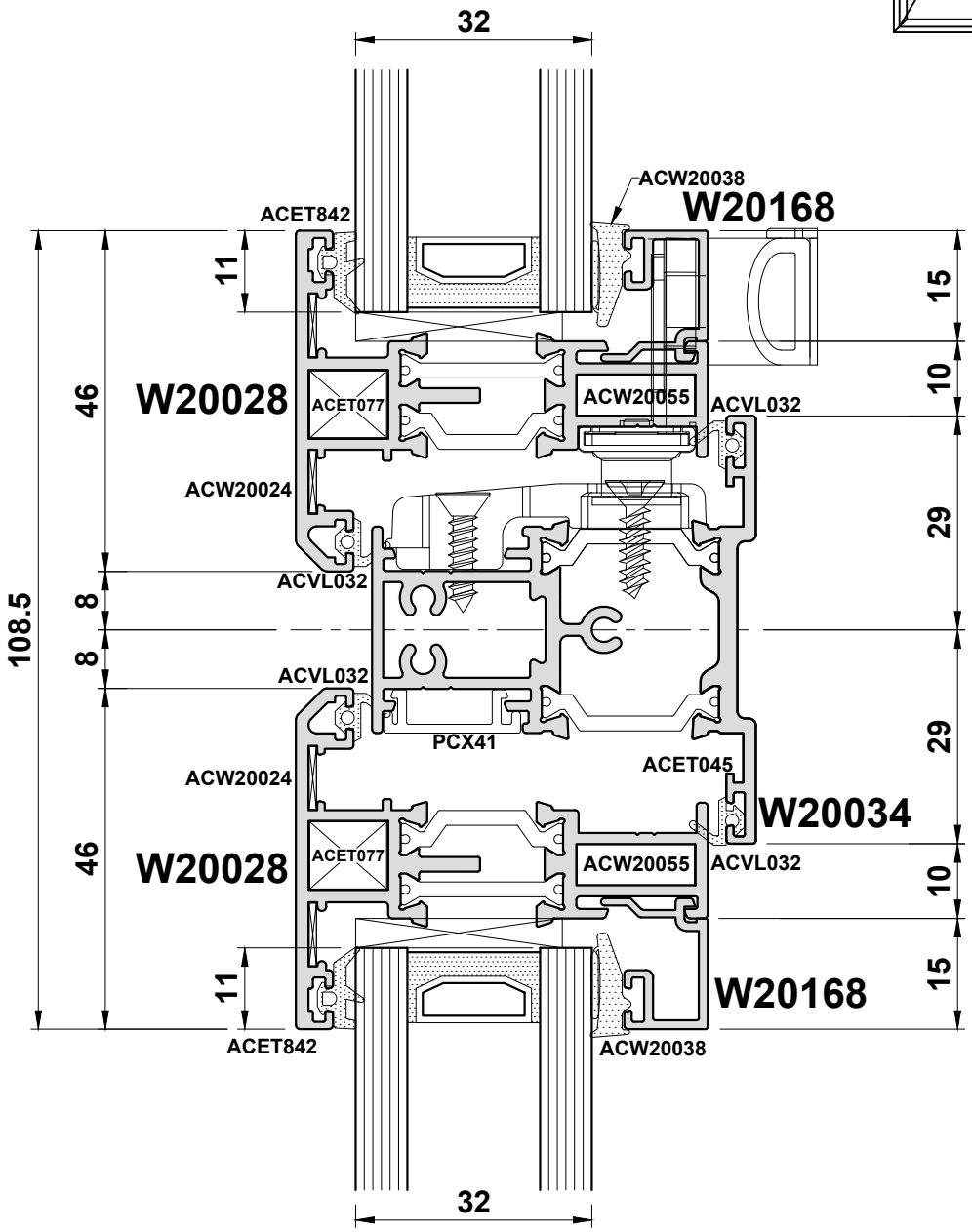

Do Not Scale From This Drawing

Detail 15A

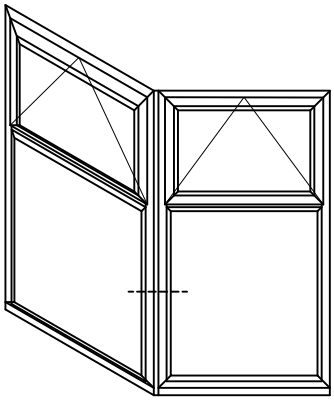

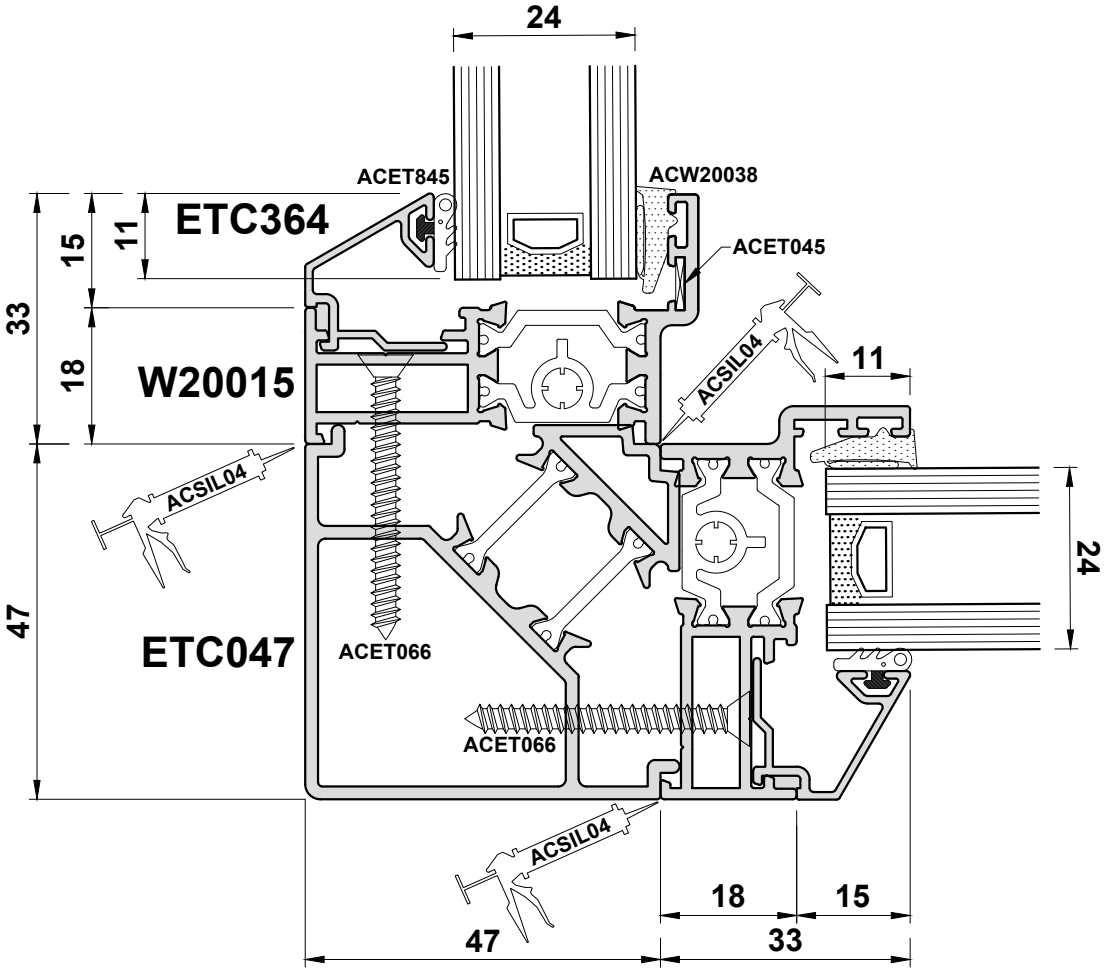

Do Not Scale From This Drawing

Detail 15B

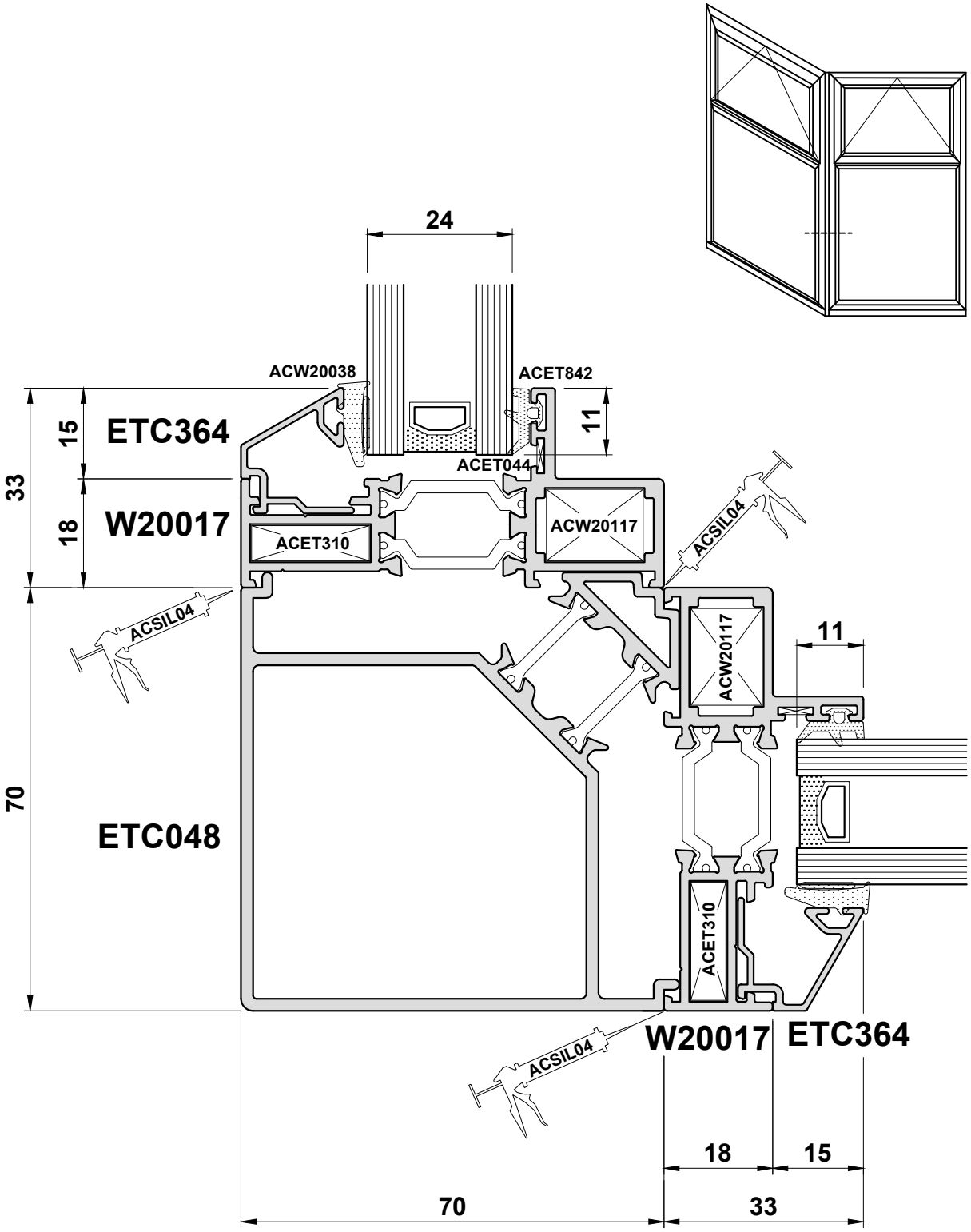

Do Not Scale From This Drawing

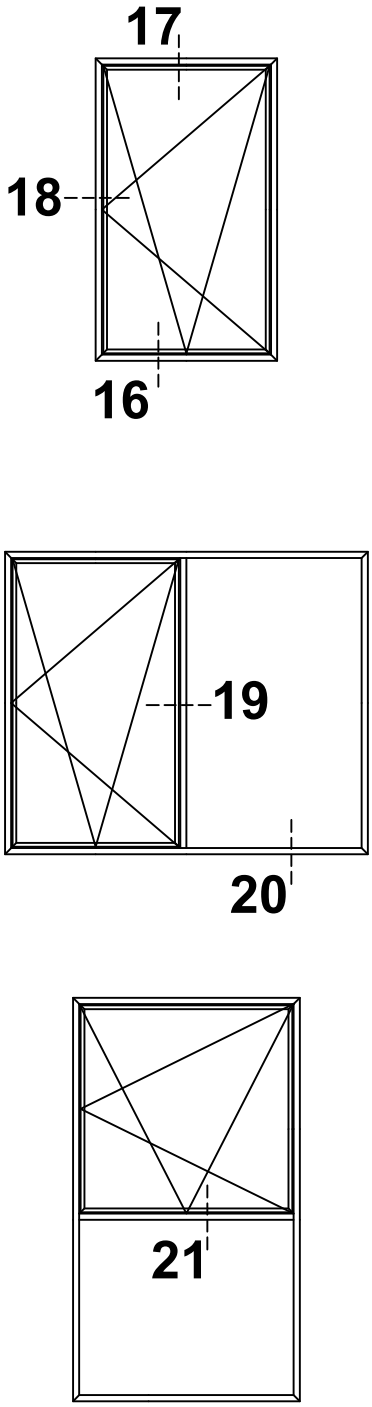

Do Not Scale From This Drawing

Detail 16

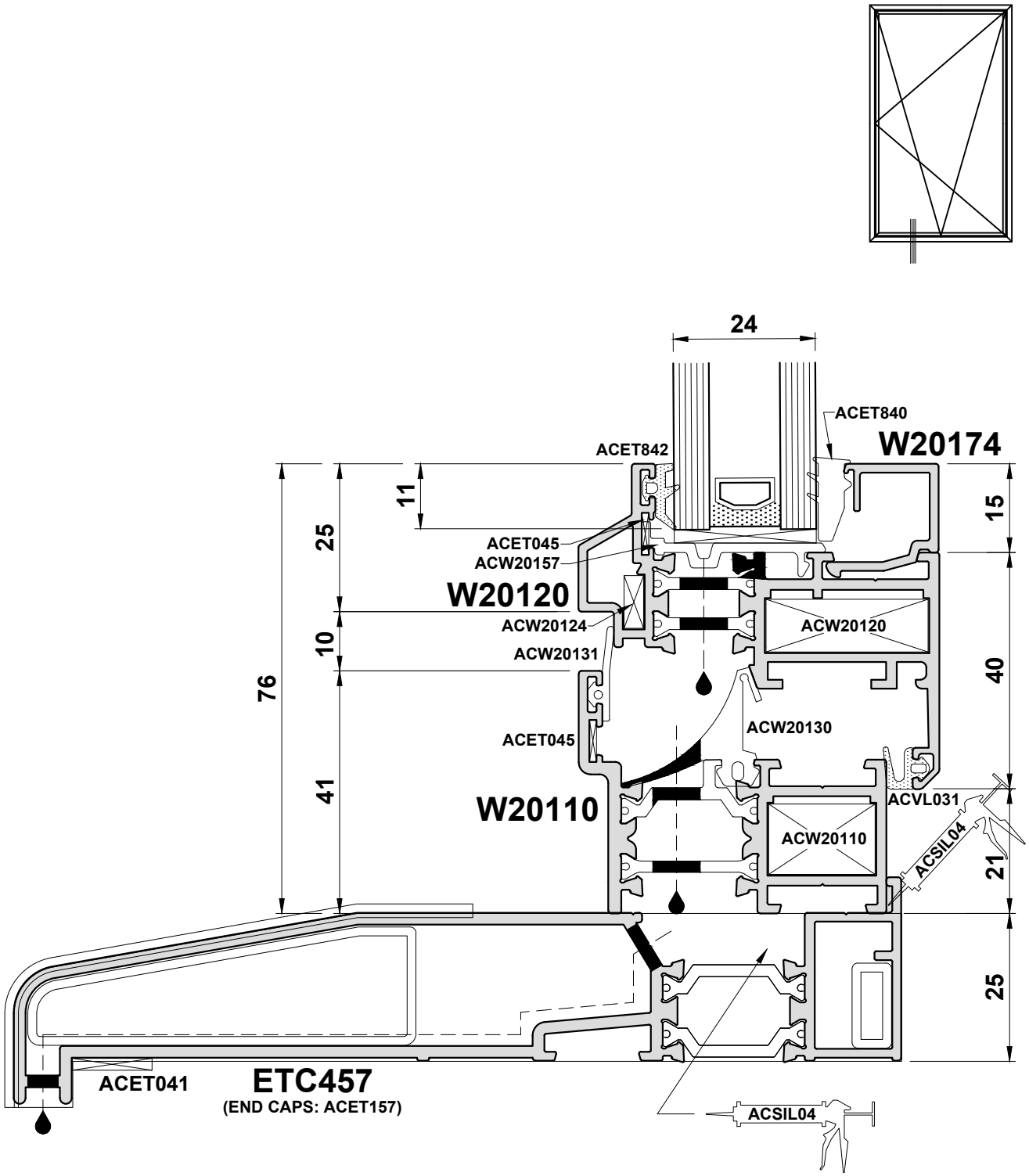

Do Not Scale From This Drawing

Detail 17

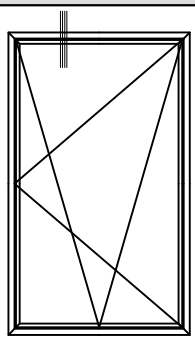

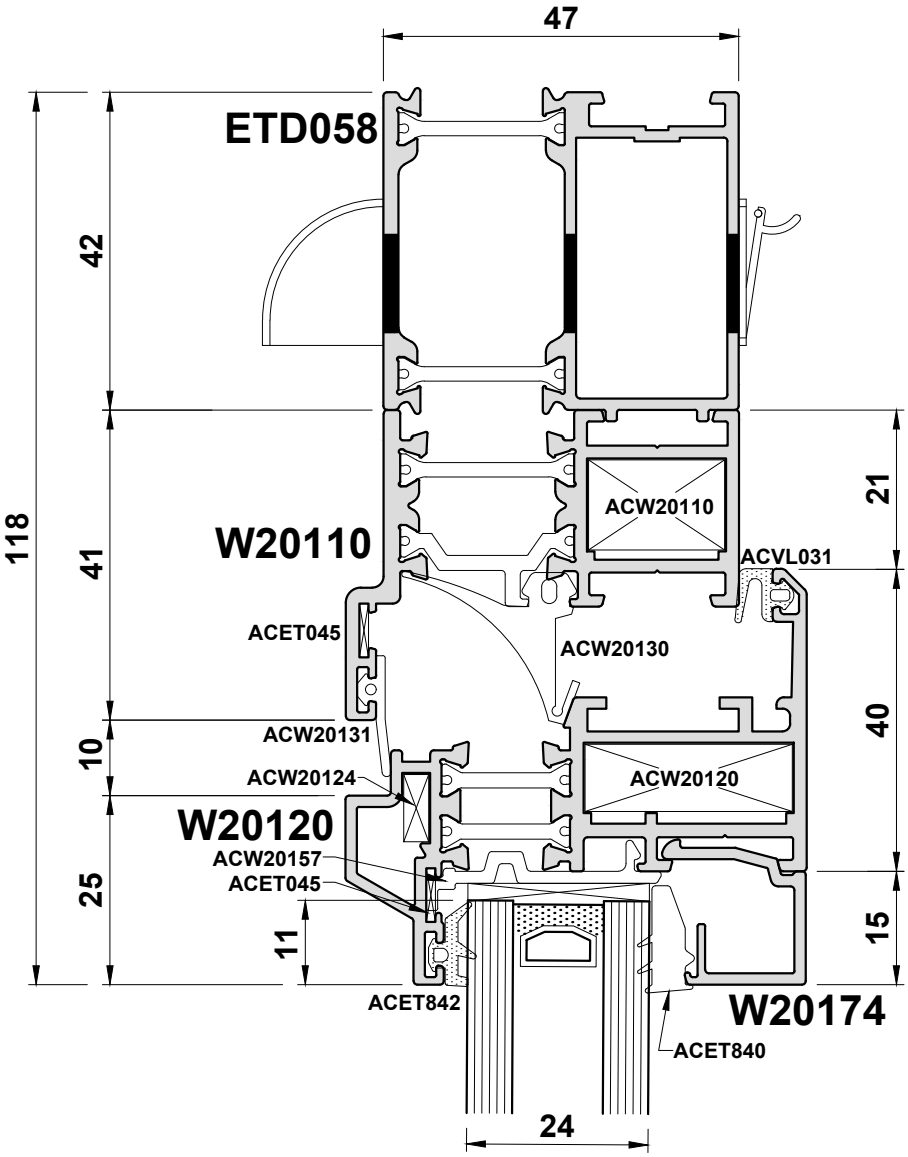

Do Not Scale From This Drawing

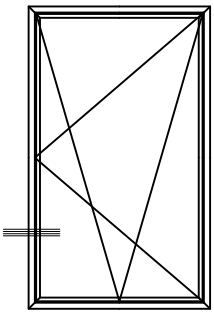

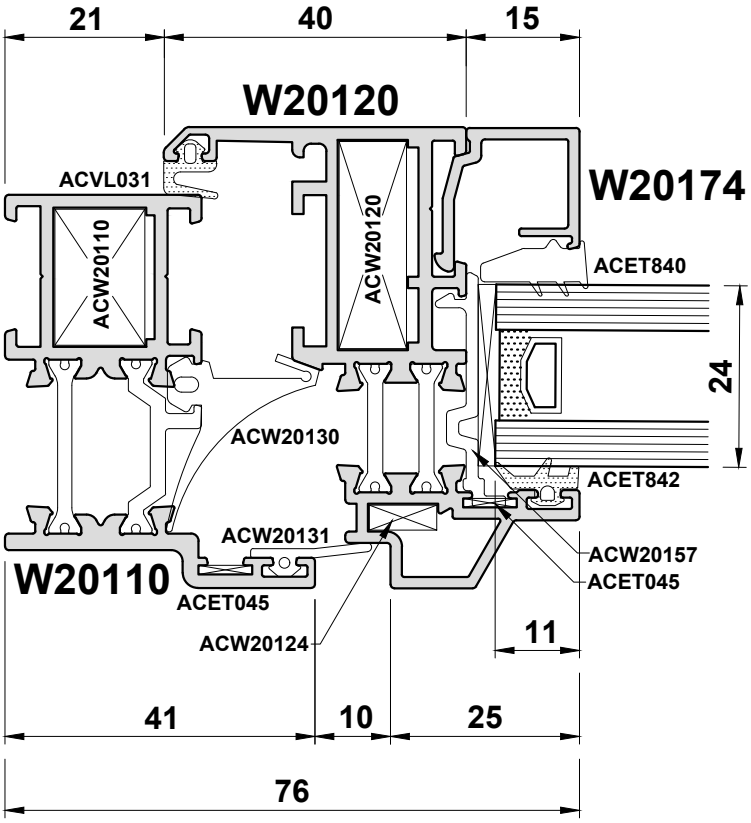

Do Not Scale From This Drawing

Detail 19

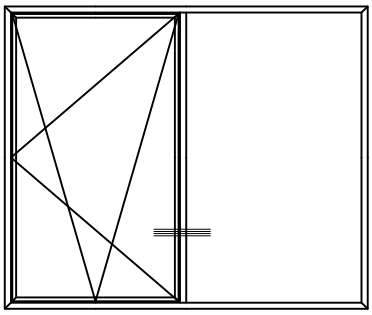

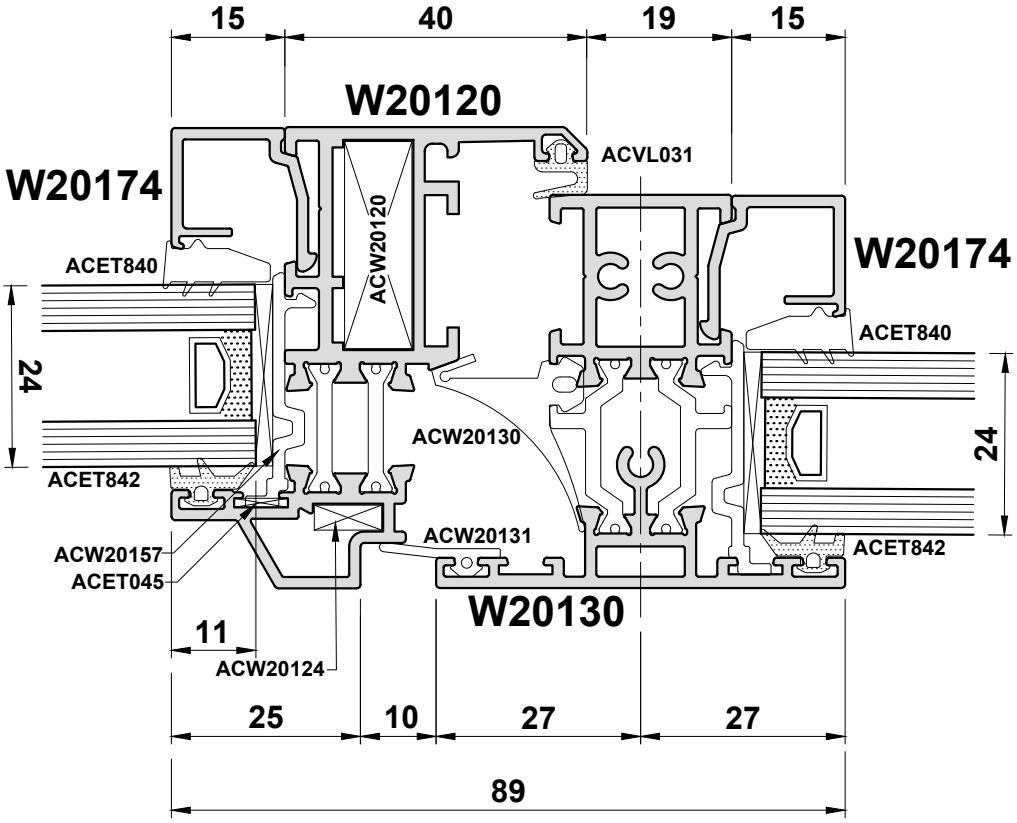

Do Not Scale From This Drawing

Detail 20

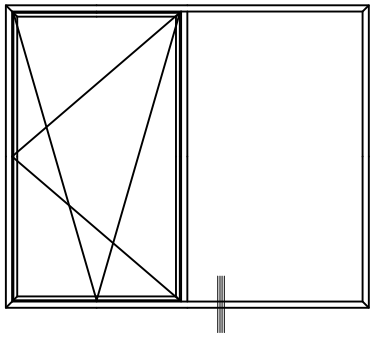

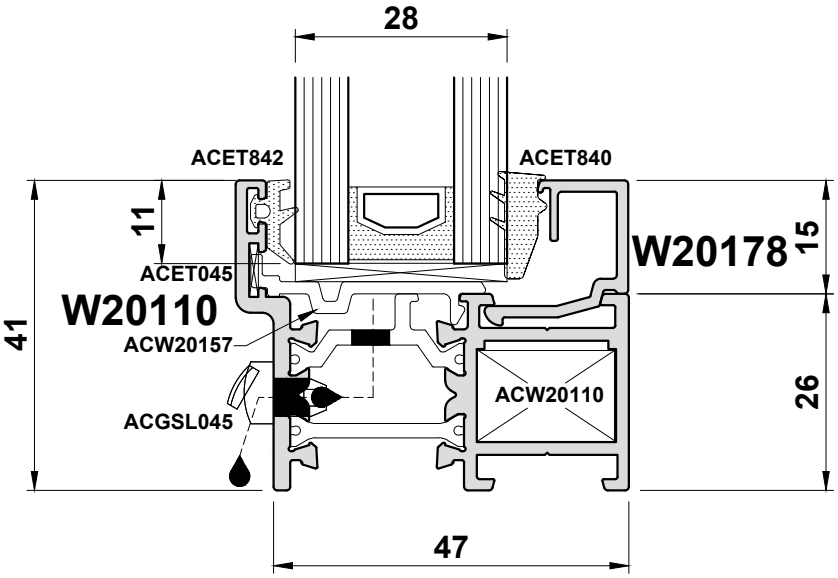

Do Not Scale From This Drawing

Detail 21

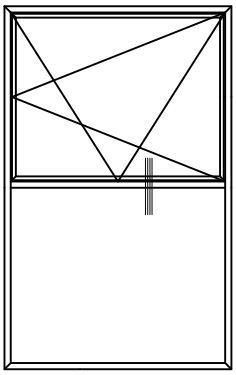

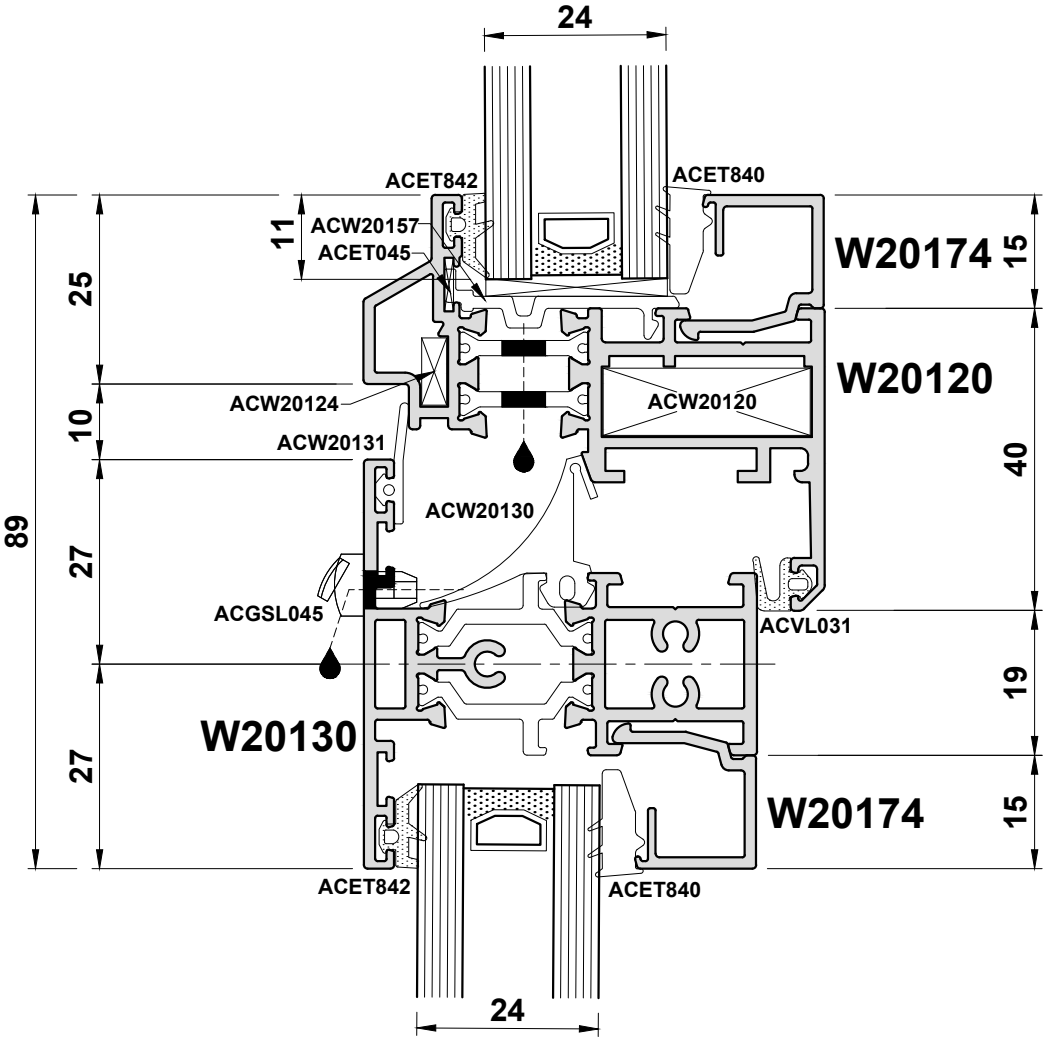

Do Not Scale From This Drawing

Do Not Scale From This Drawing

Open Out Doors

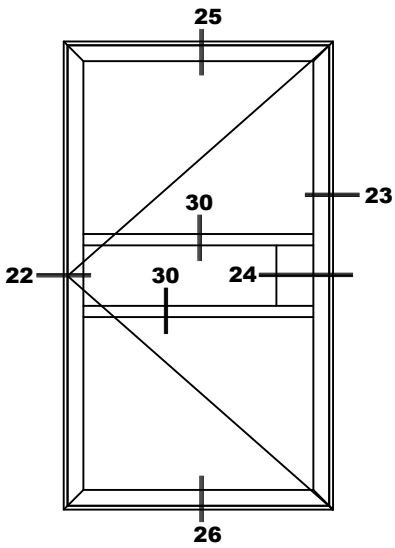

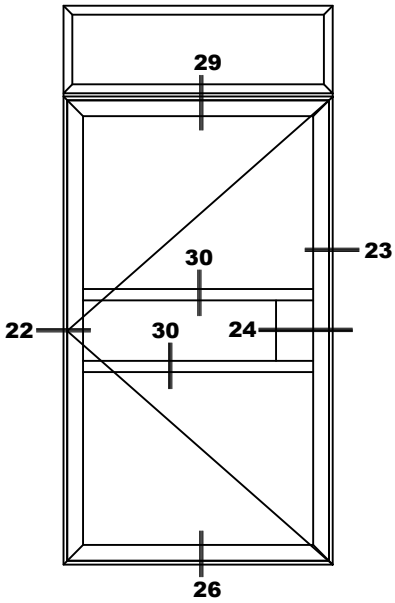

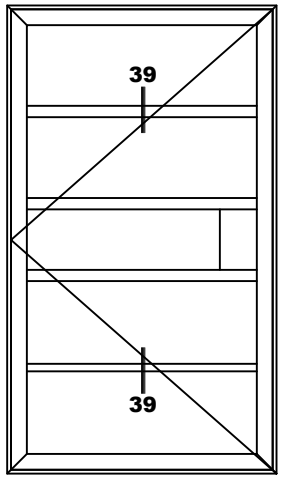

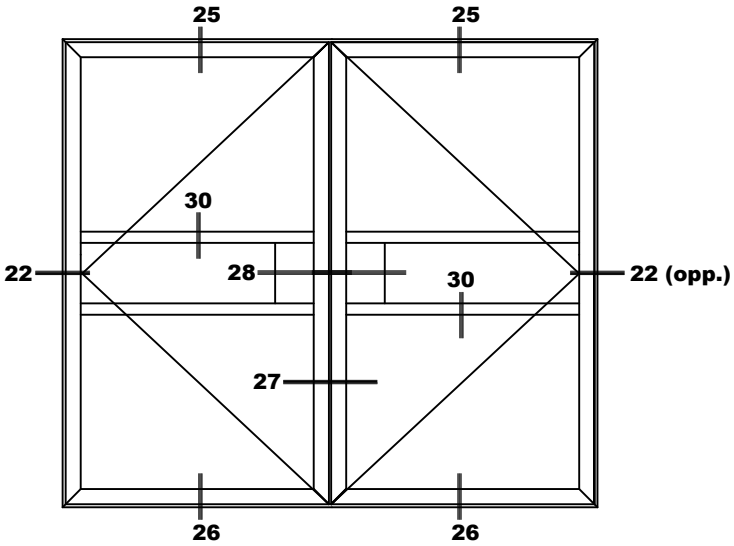

Do Not Scale From This Drawing

Detail 22A

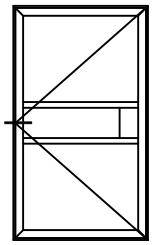

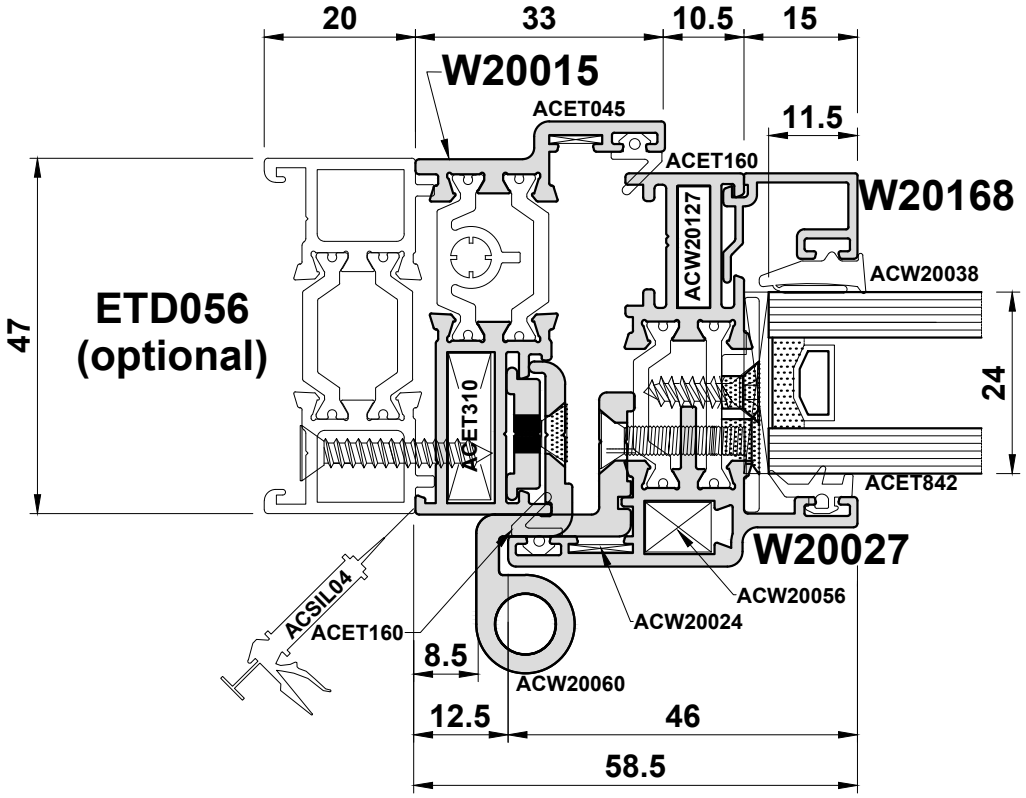

Do Not Scale From This Drawing

Detail 22B

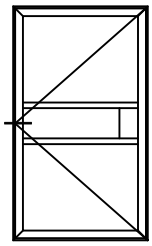

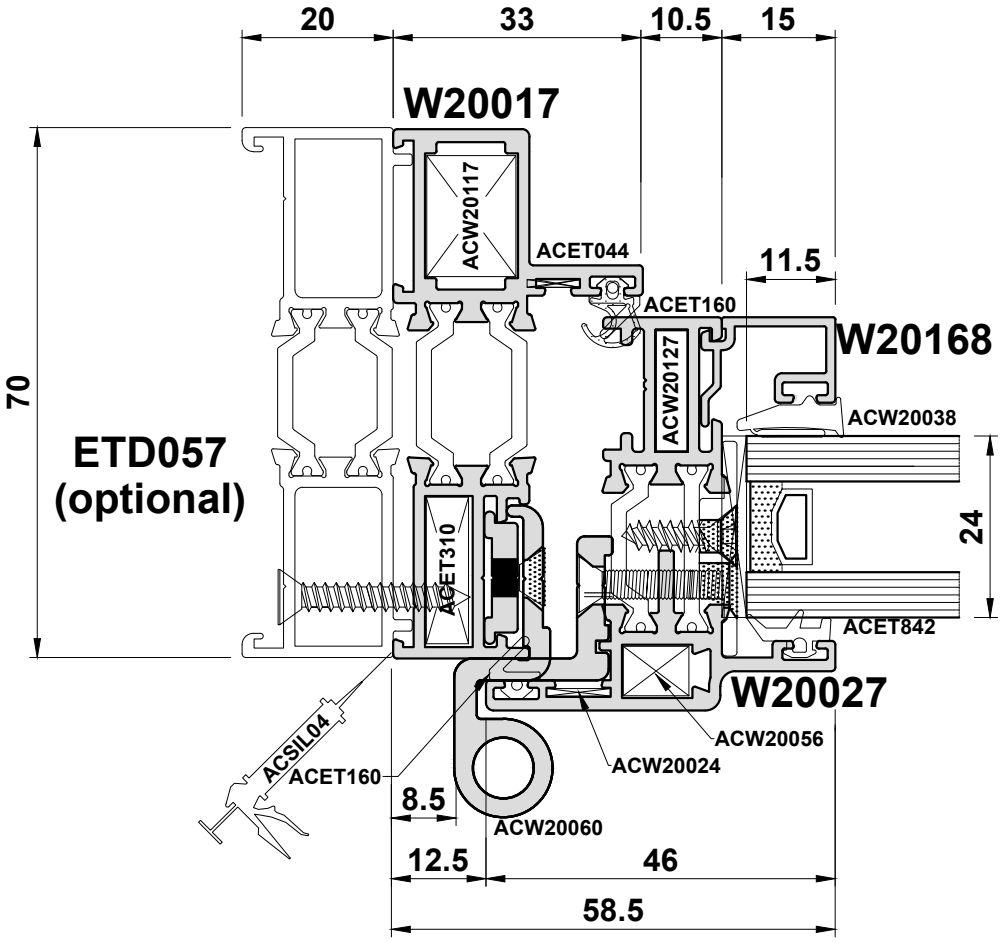

Do Not Scale From This Drawing

Detail 23

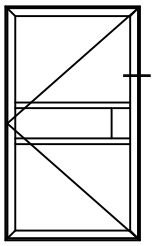

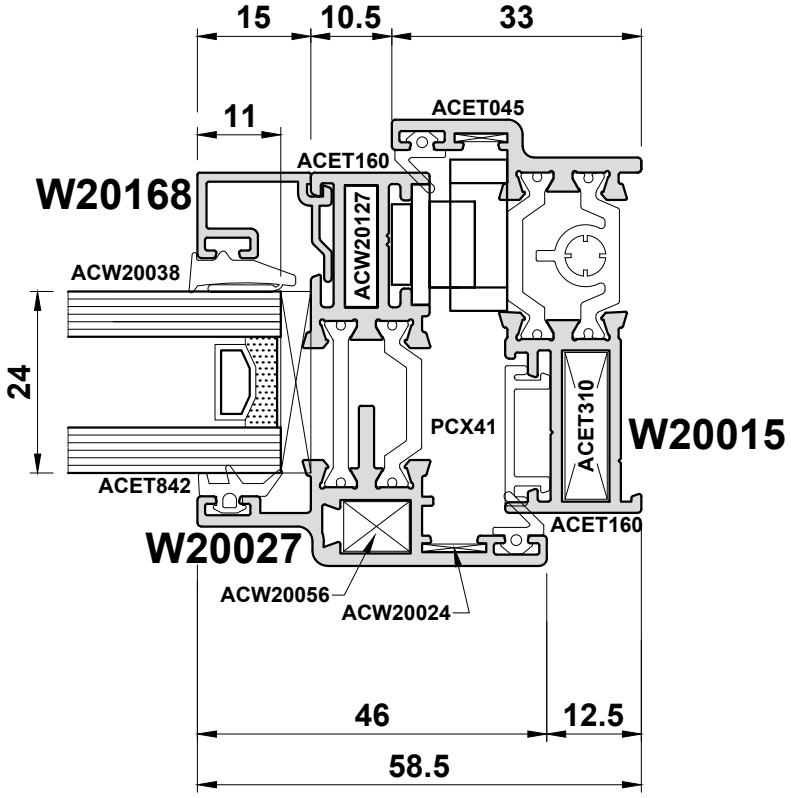

Do Not Scale From This Drawing

Detail 24

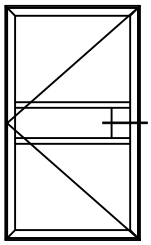

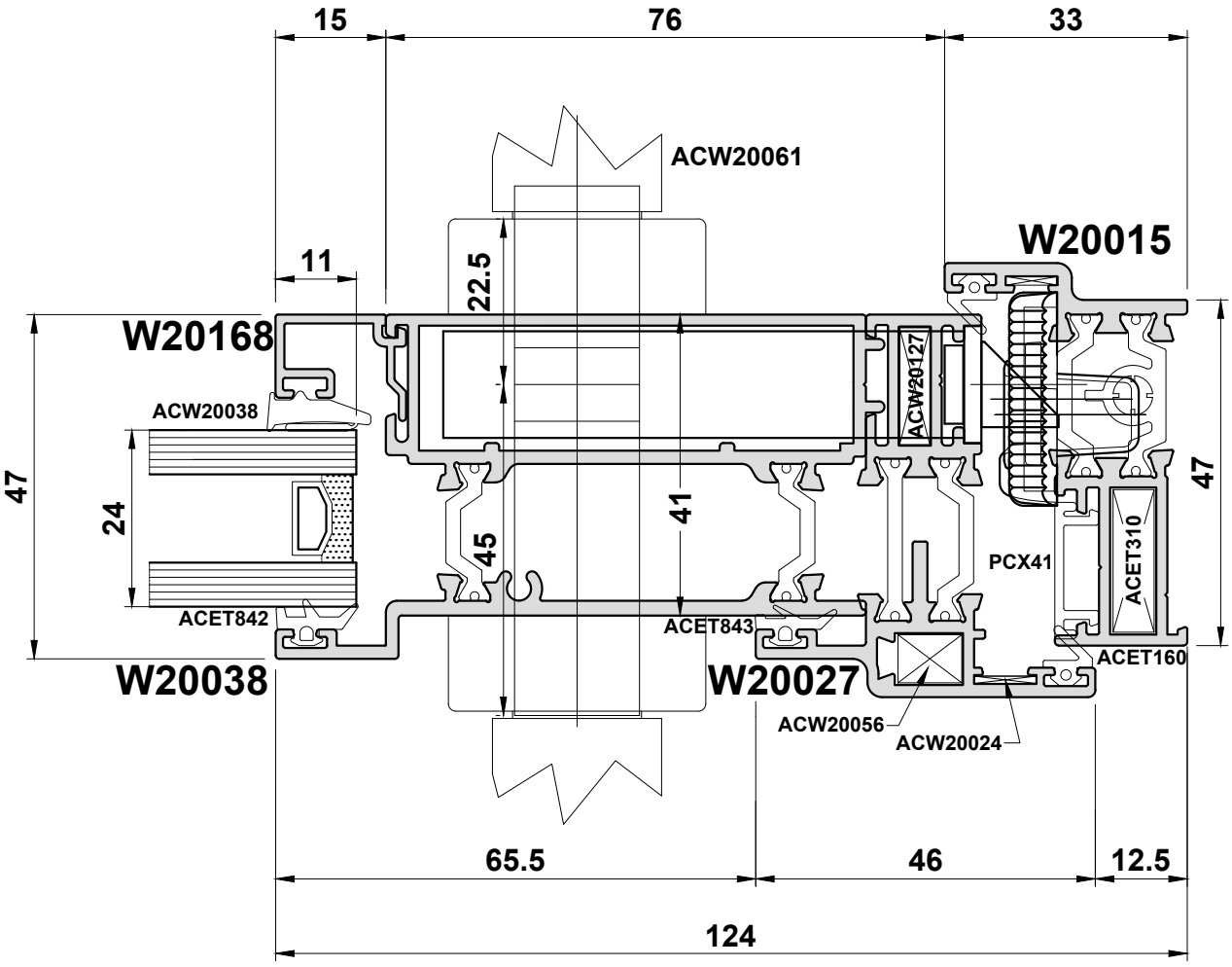

Do Not Scale From This Drawing

Detail 25A

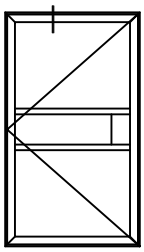

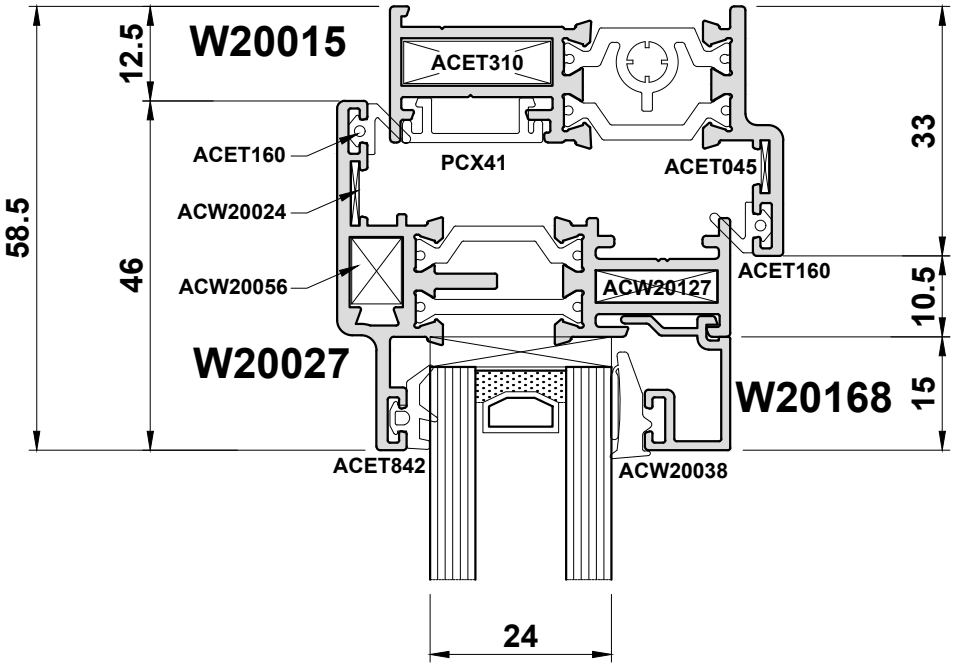

Do Not Scale From This Drawing

Detail 25B

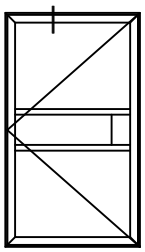

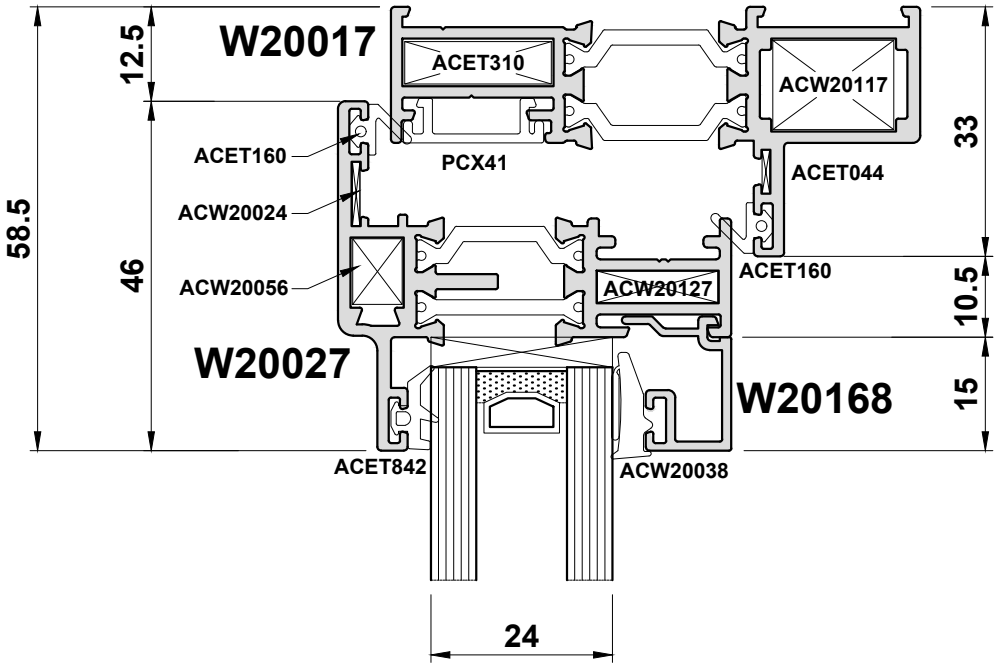

Do Not Scale From This Drawing

Detail 26A

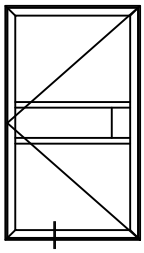

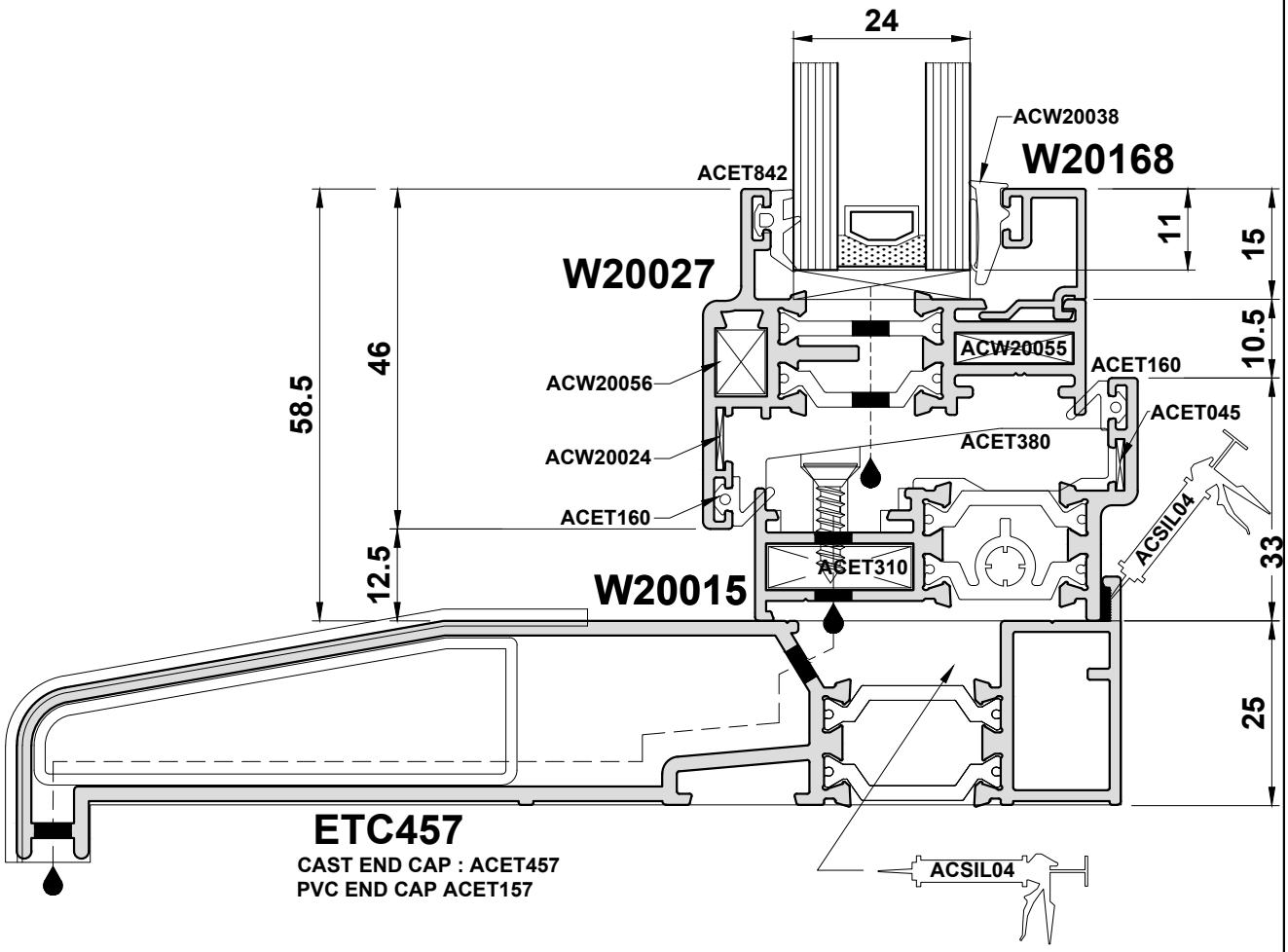

Do Not Scale From This Drawing

Detail 26B

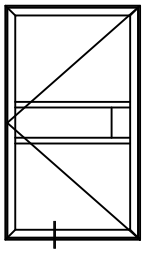

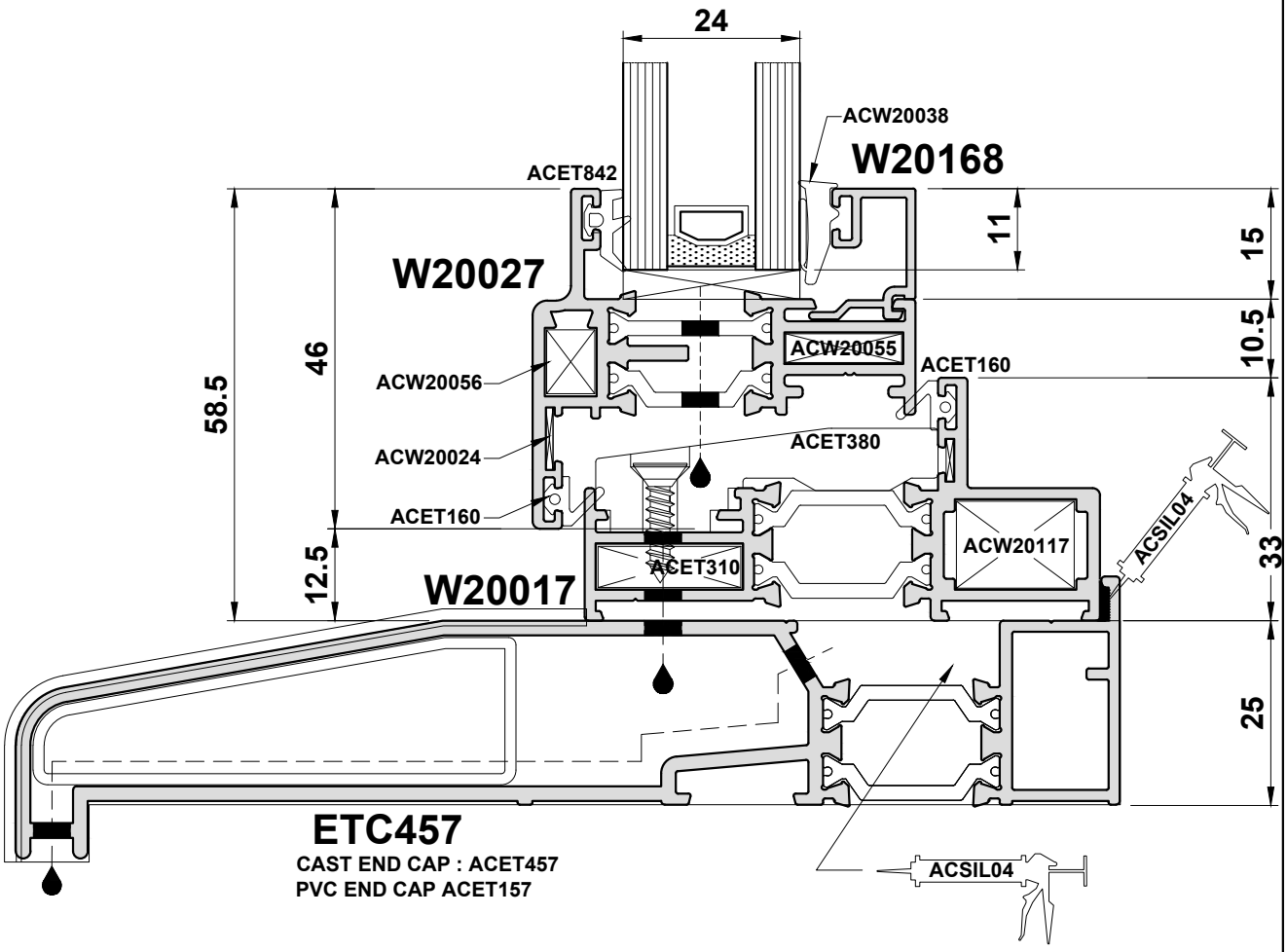

Do Not Scale From This Drawing

Detail 27

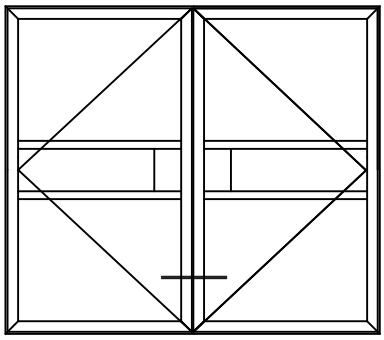

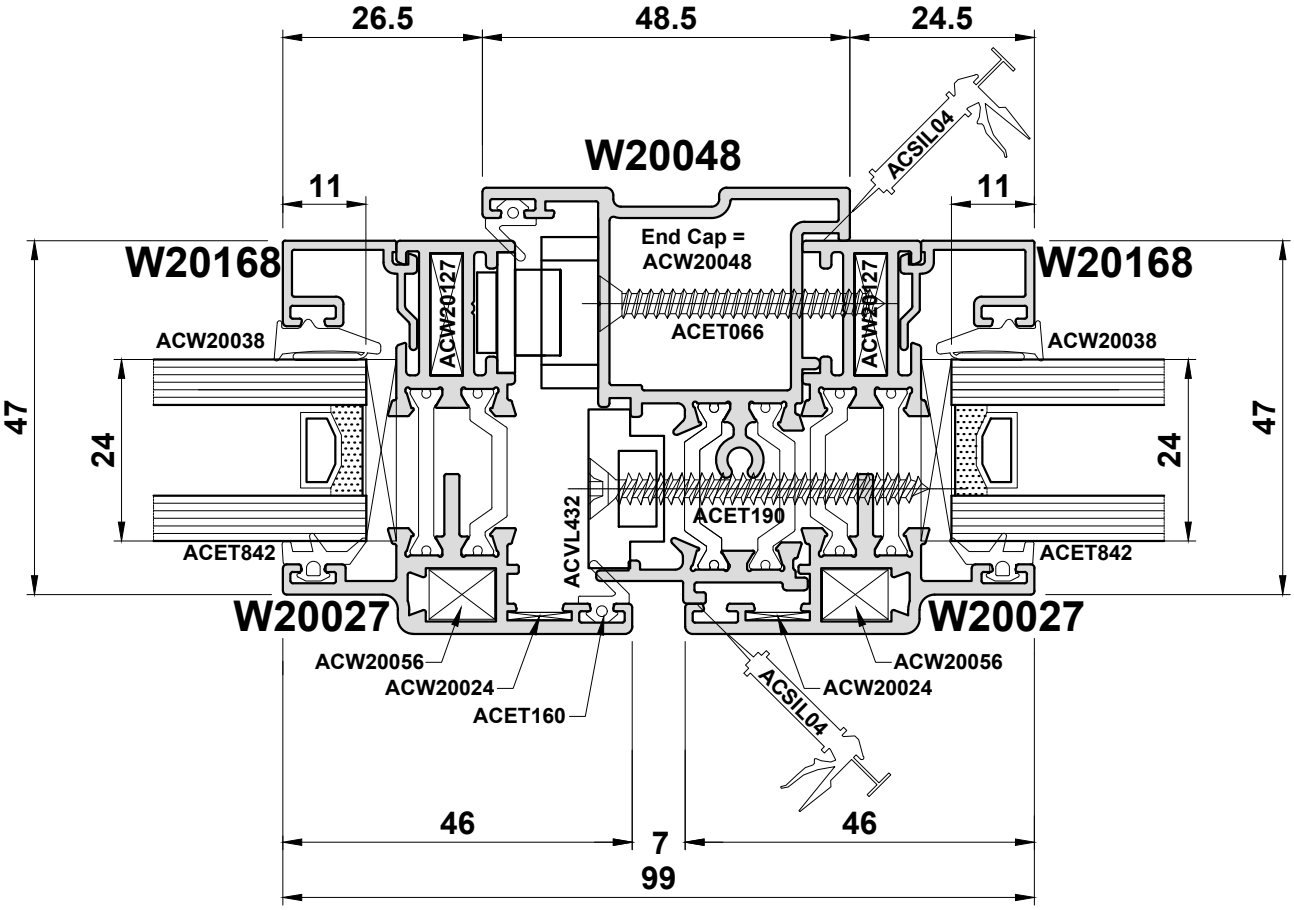

Do Not Scale From This Drawing

Detail 28

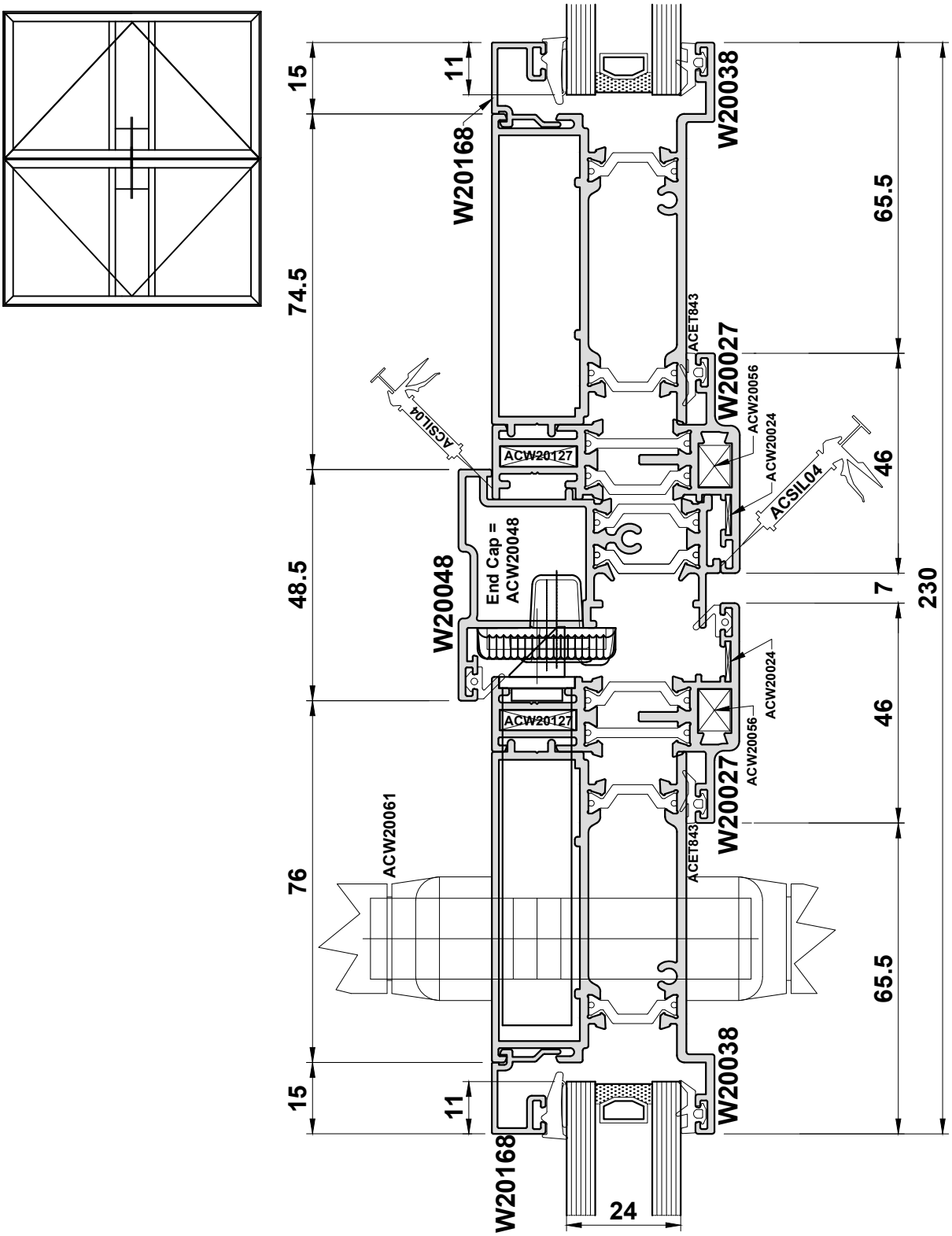

Not To Scale

Do Not Scale From This Drawing

Detail 29

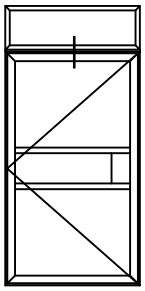

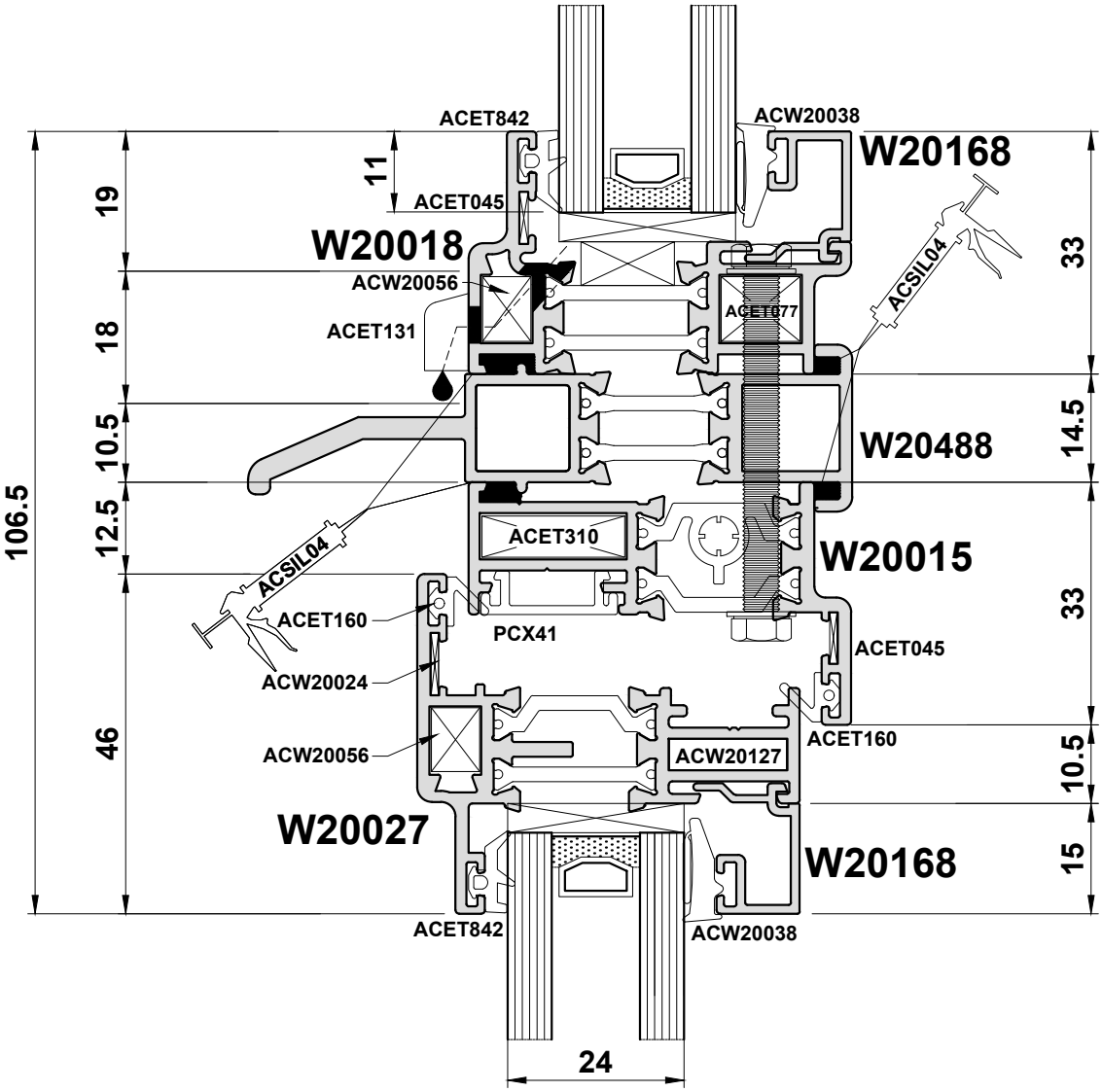

Do Not Scale From This Drawing

Detail 30

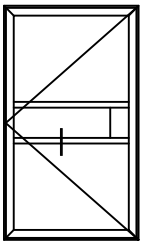

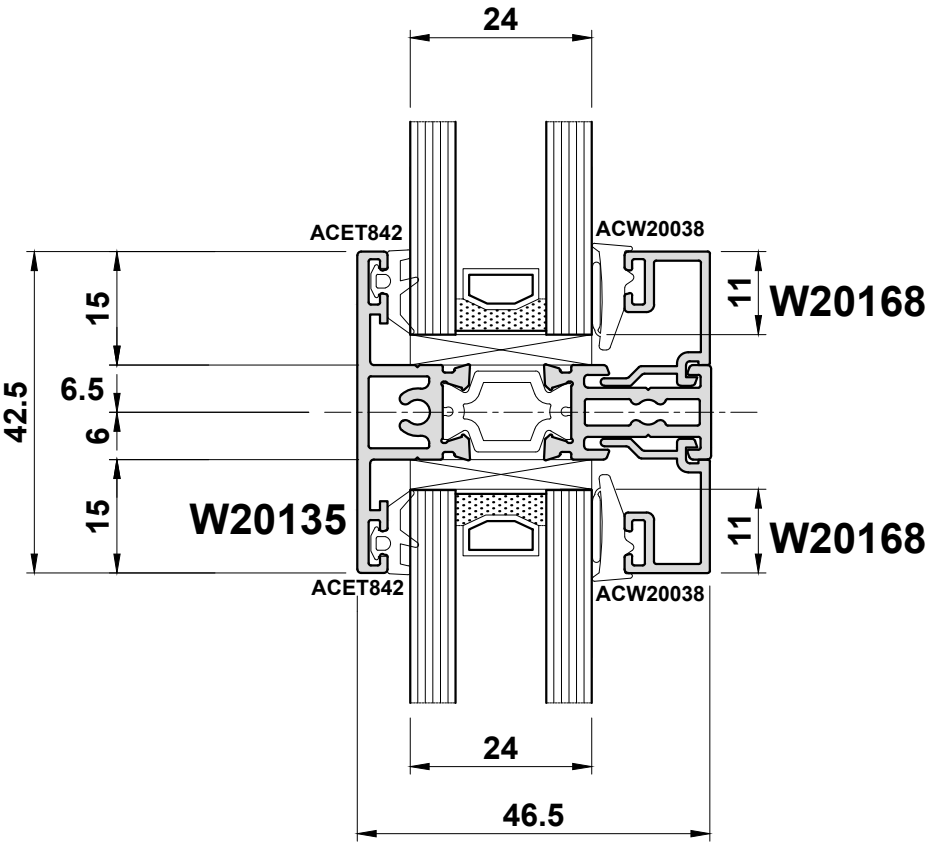

Note: Transoms will drain through the join to the sash.

Do Not Scale From This Drawing

Open In Doors

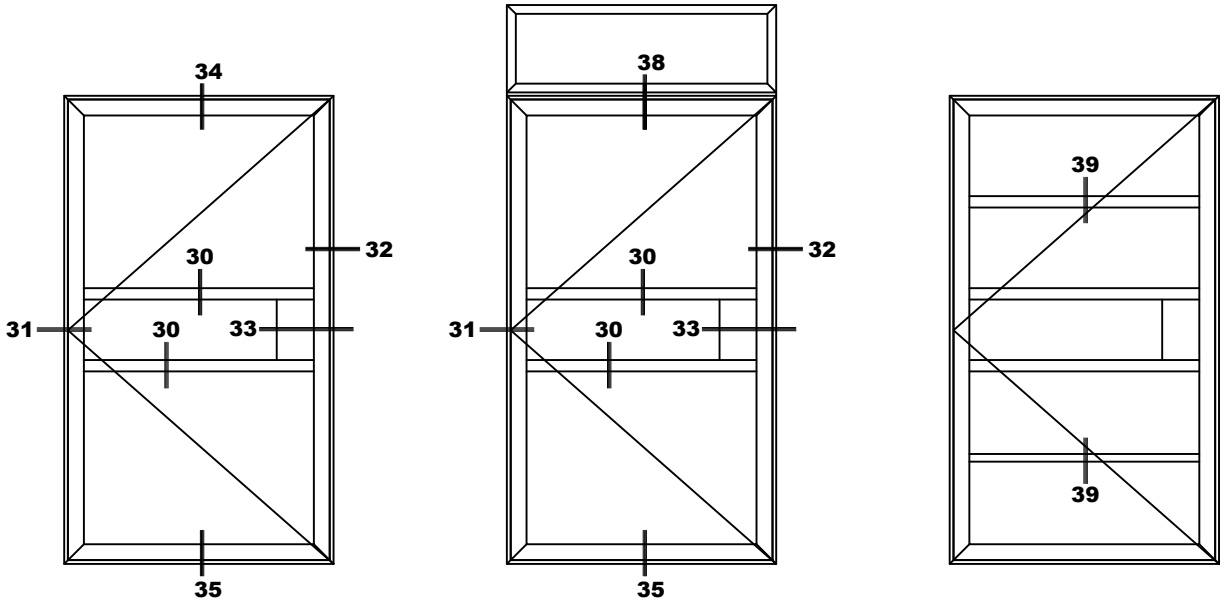

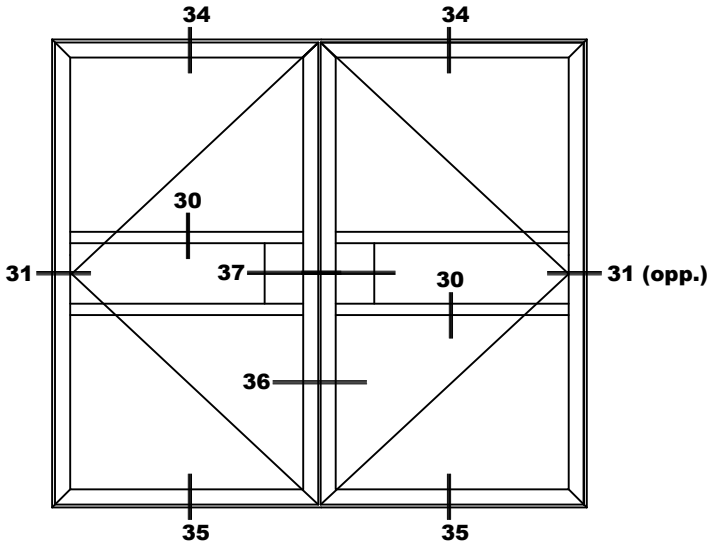

Do Not Scale From This Drawing

Detail 31A

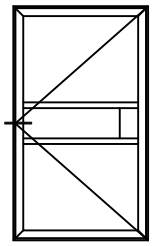

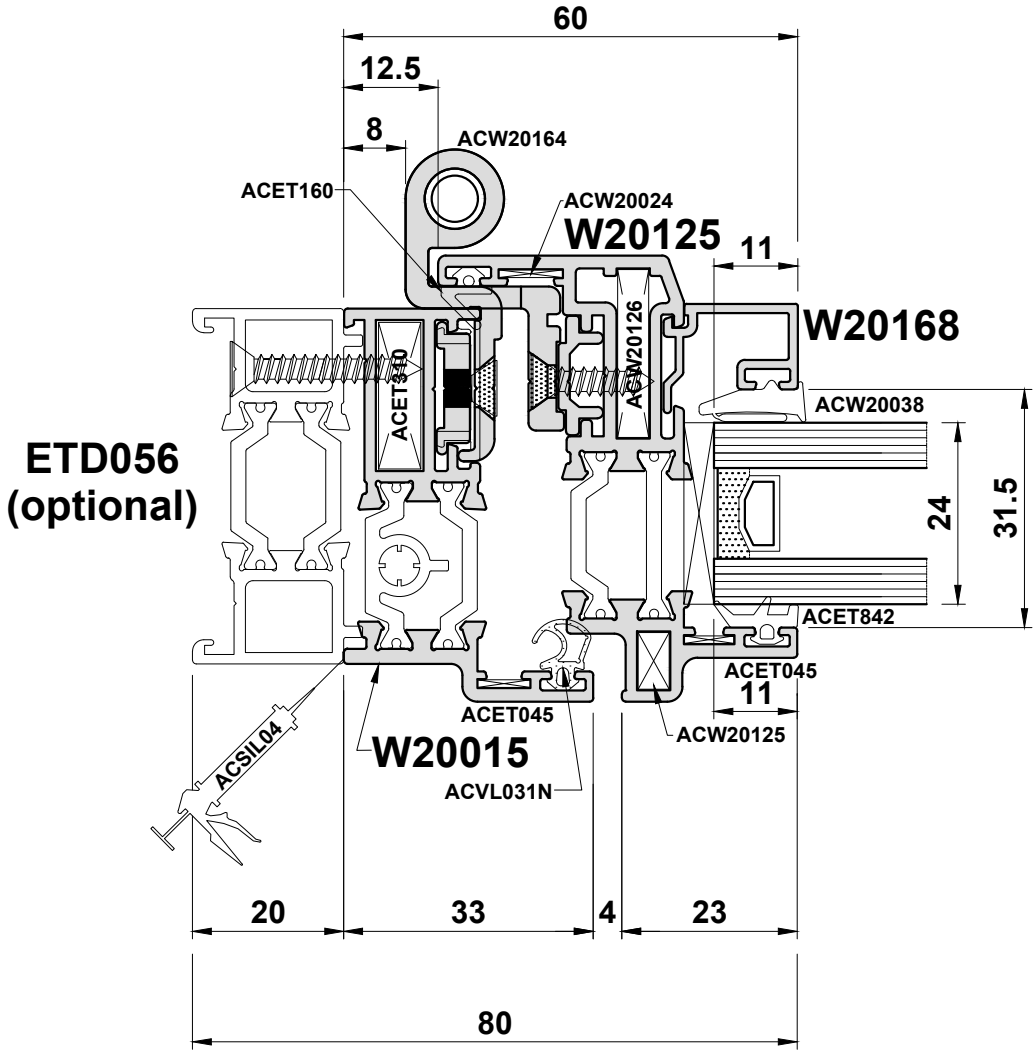

Do Not Scale From This Drawing

Detail 31B

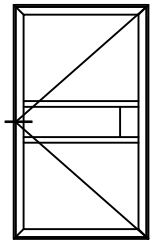

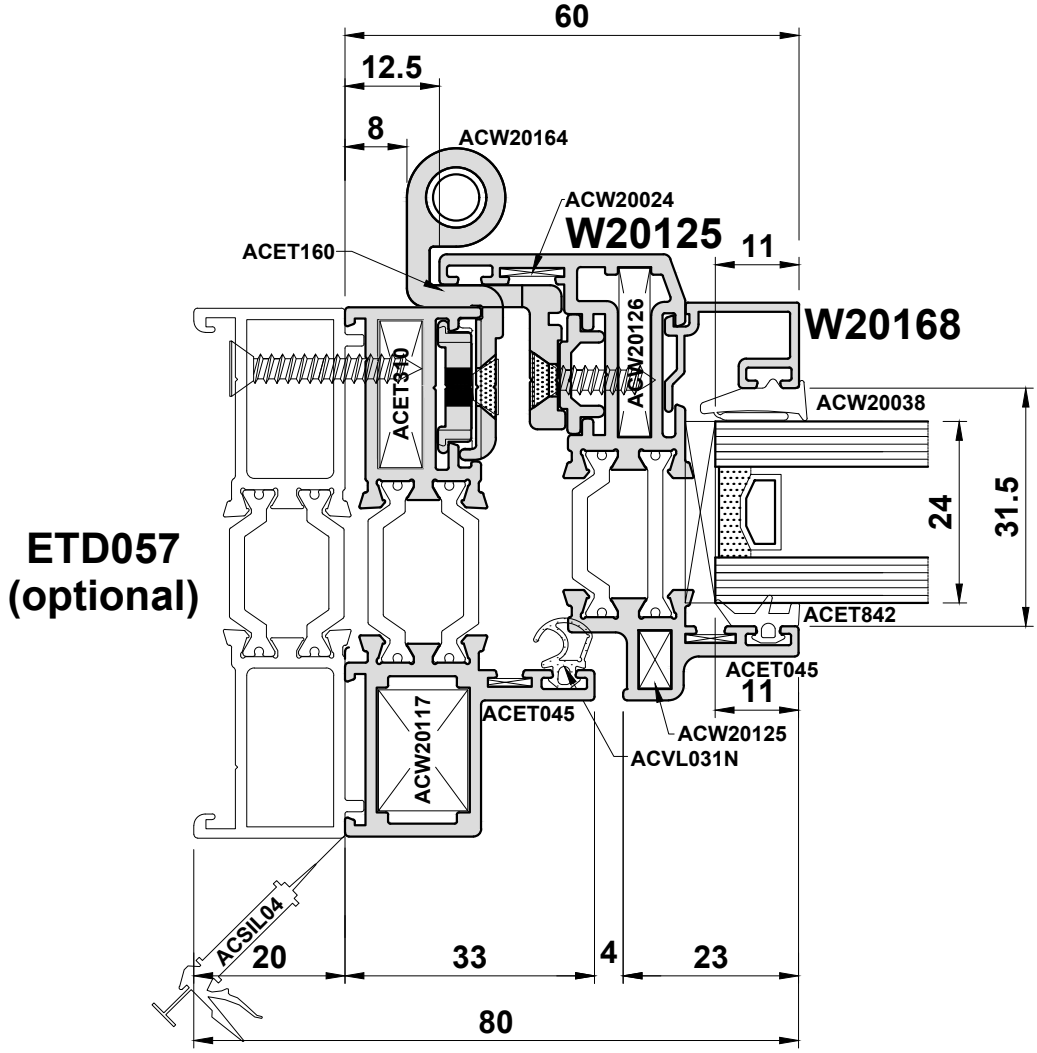

Do Not Scale From This Drawing

Open In - Detail 32

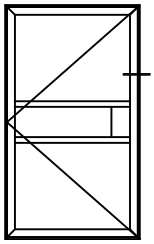

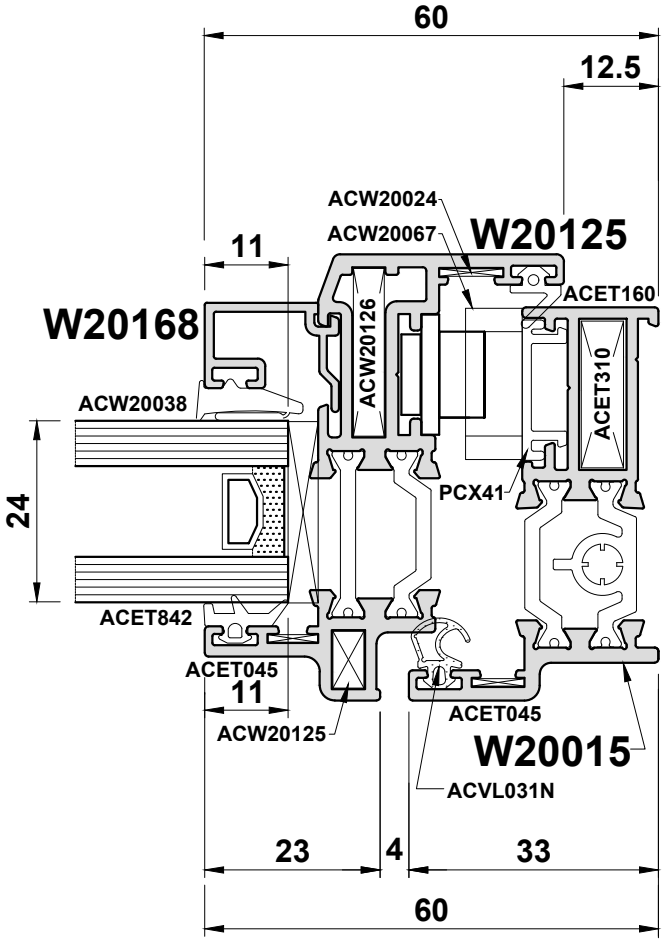

Do Not Scale From This Drawing

Detail 33A

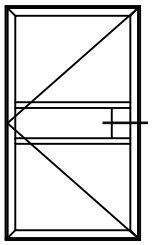

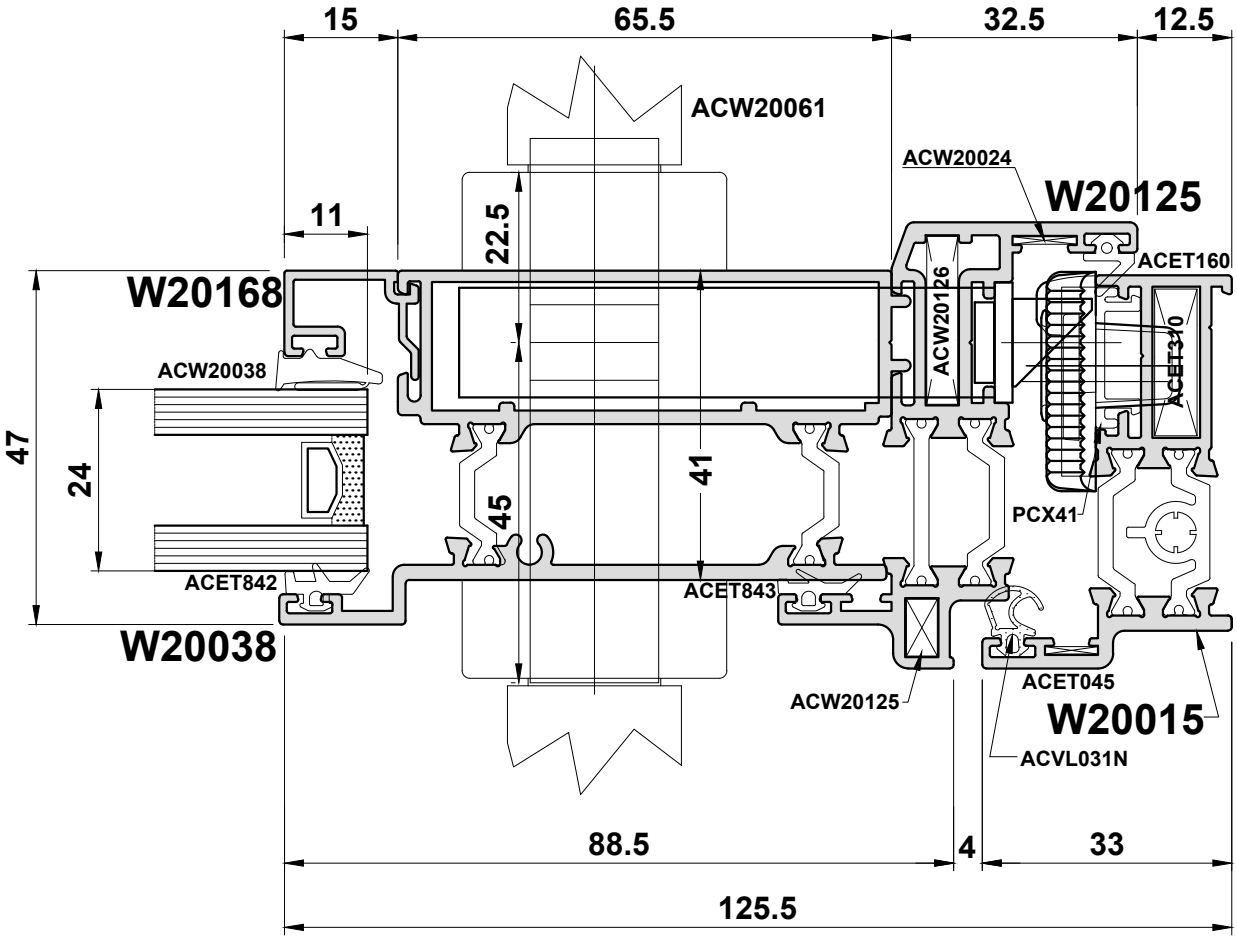

Do Not Scale From This Drawing

Detail 33B

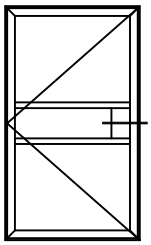

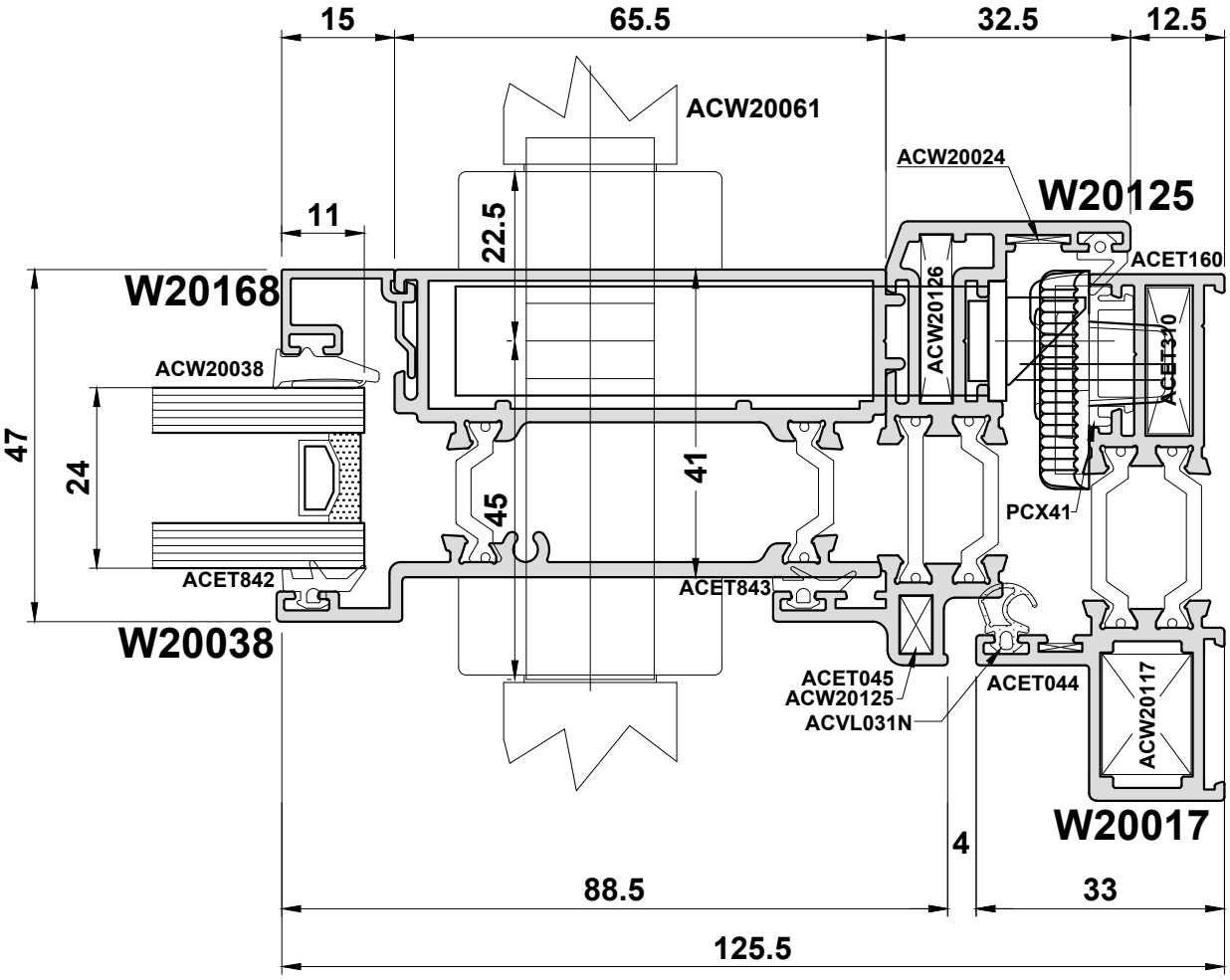

Do Not Scale From This Drawing

Detail 34A

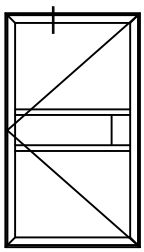

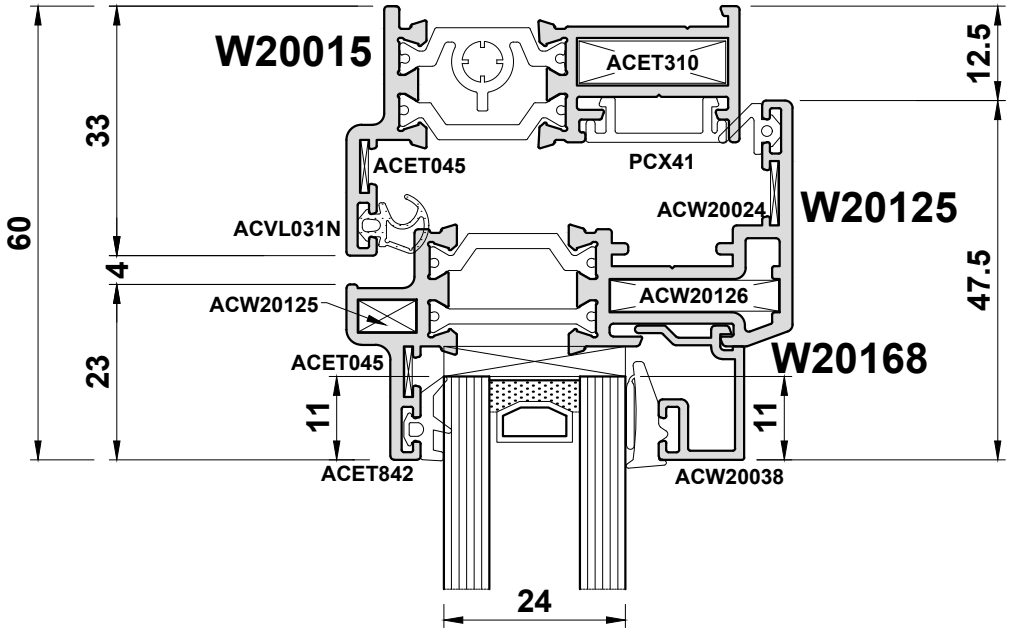

Do Not Scale From This Drawing

Detail 34B

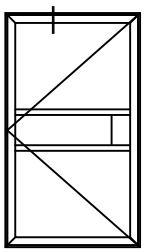

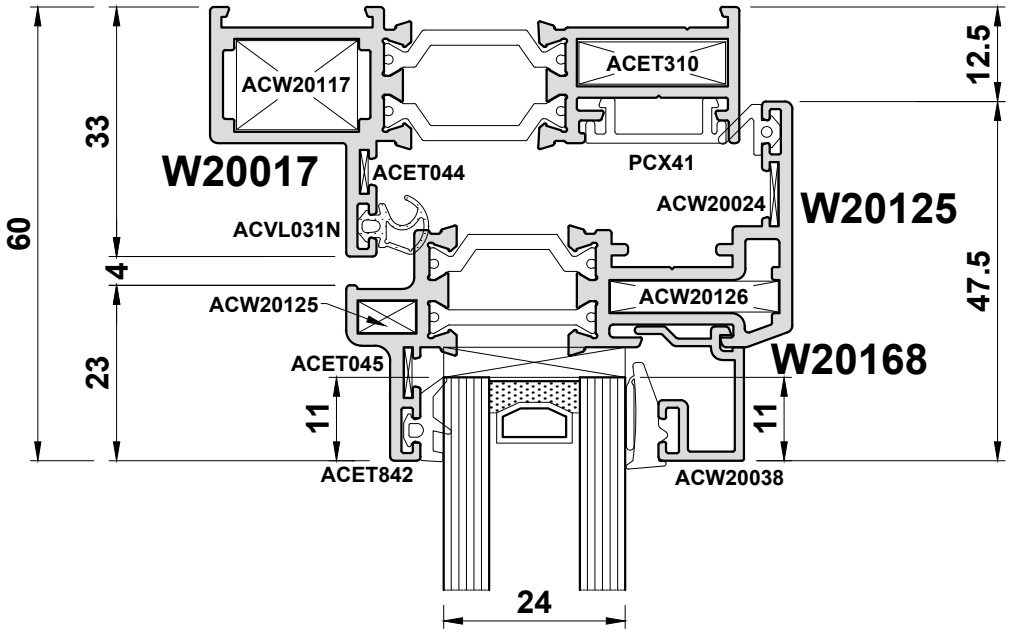

Do Not Scale From This Drawing

Detail 35A

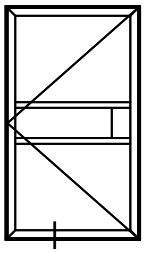

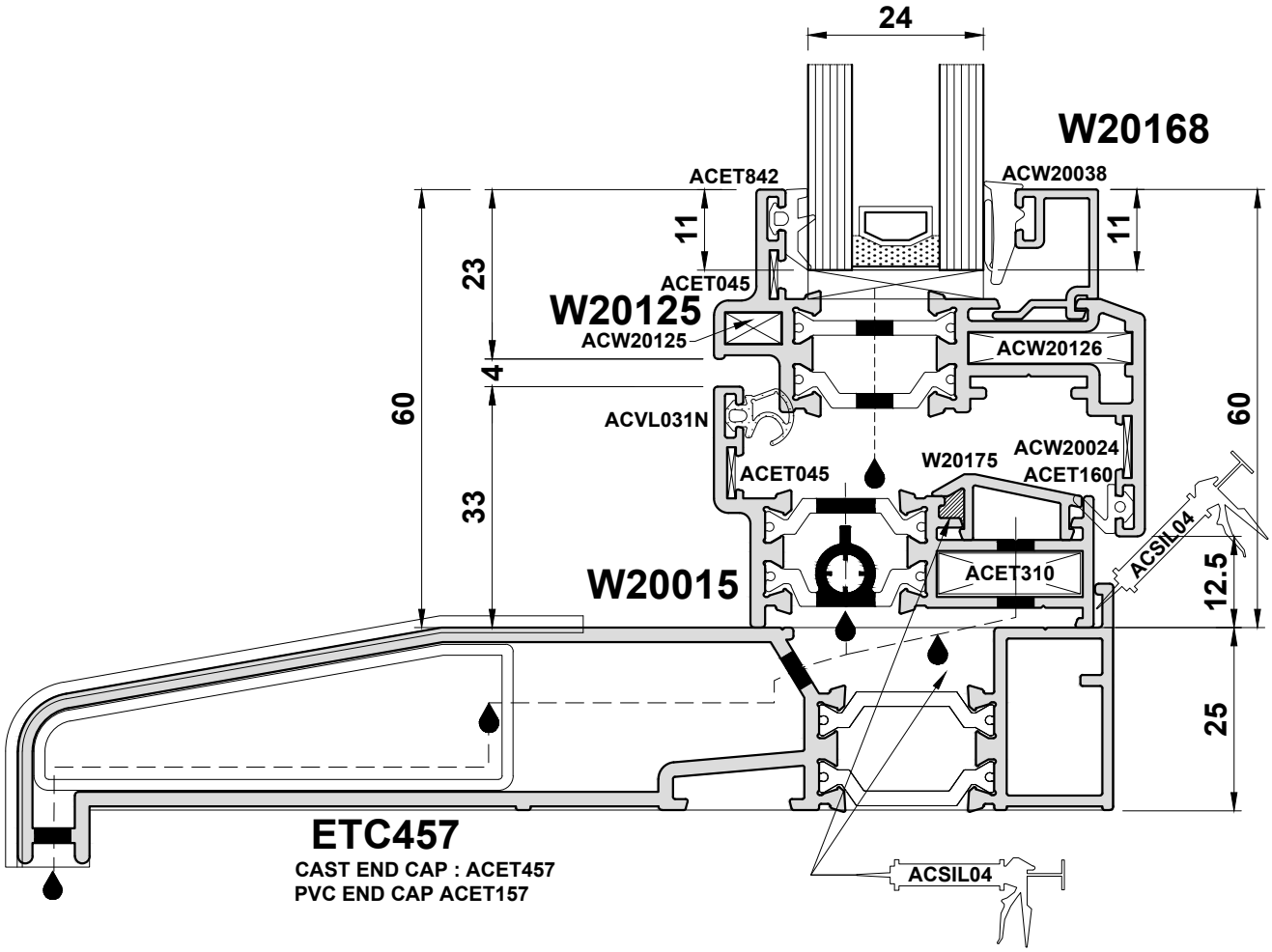

Do Not Scale From This Drawing

Detail 35B

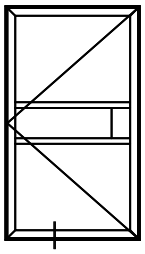

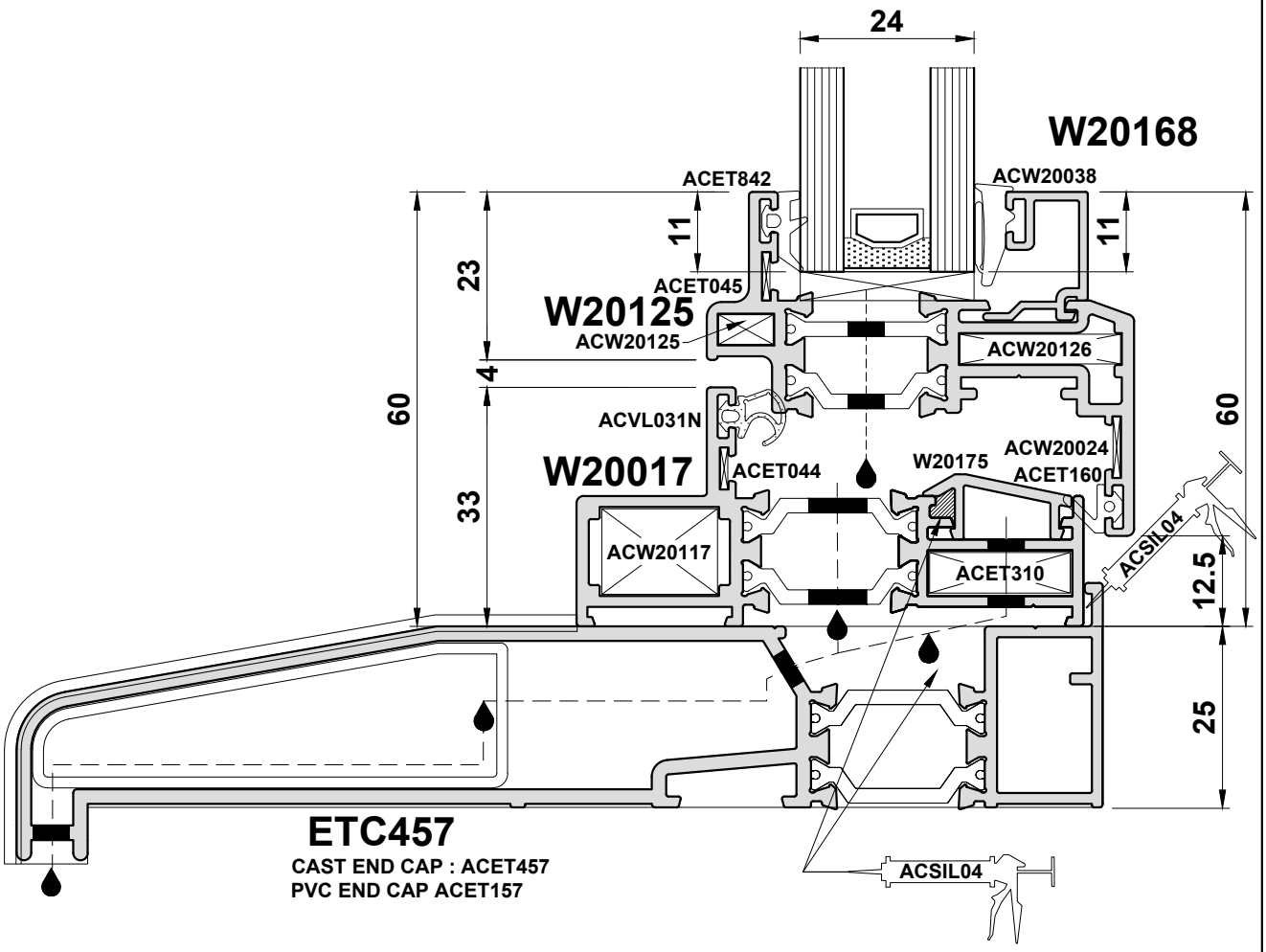

Do Not Scale From This Drawing

Detail 36

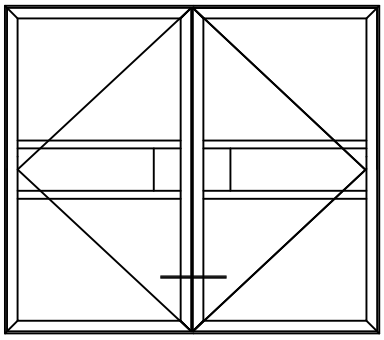

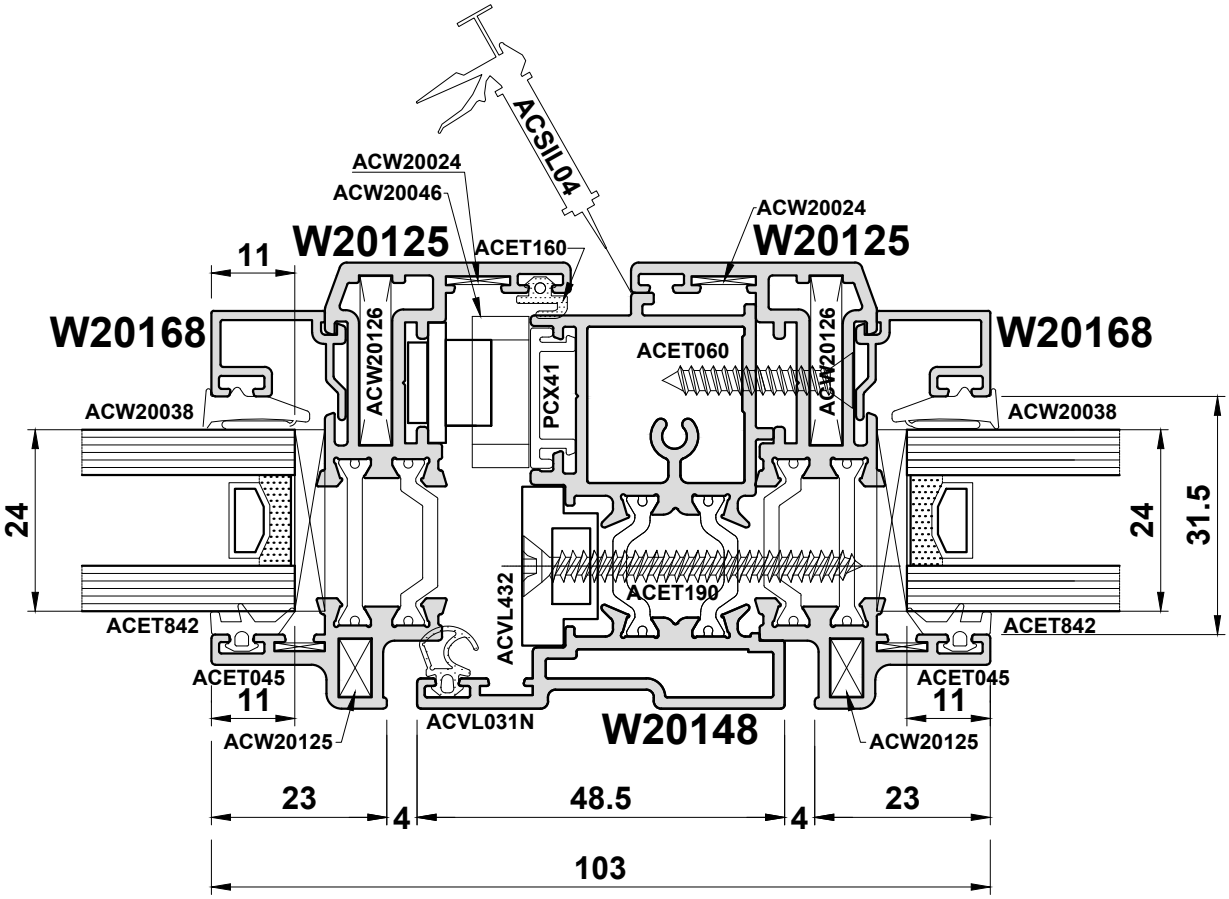

Do Not Scale From This Drawing

Detail 37

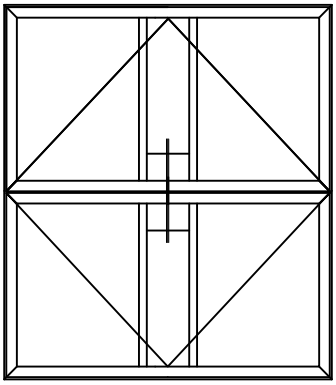

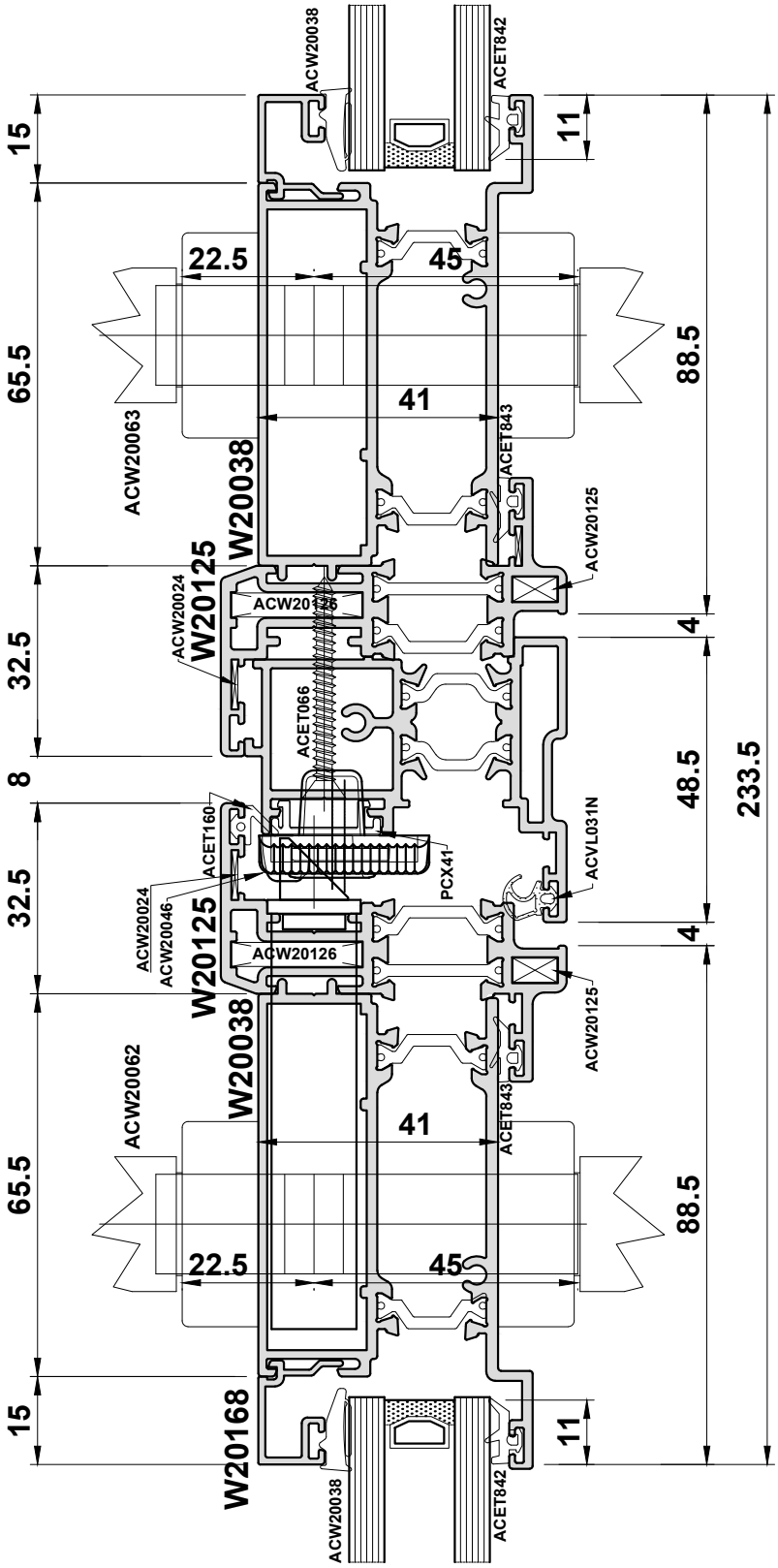

Do Not Scale From This Drawing

Detail 38

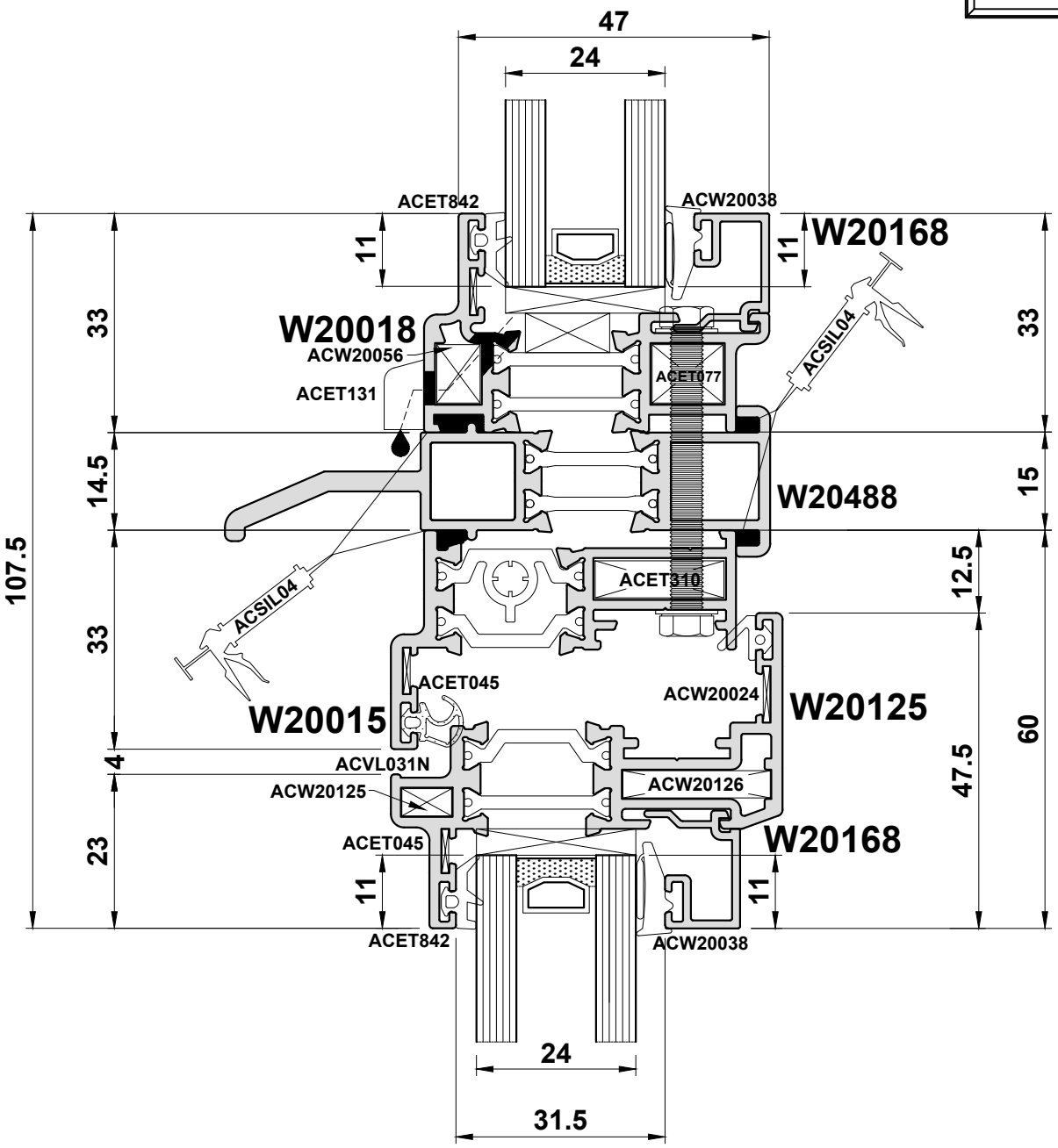

Do Not Scale From This Drawing

Detail 39A

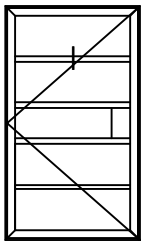

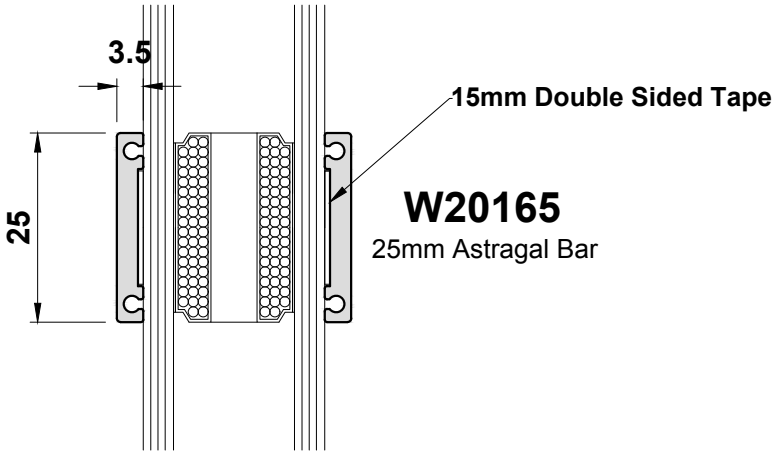

Detail 39B

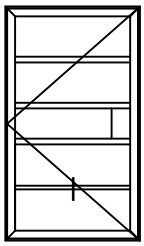

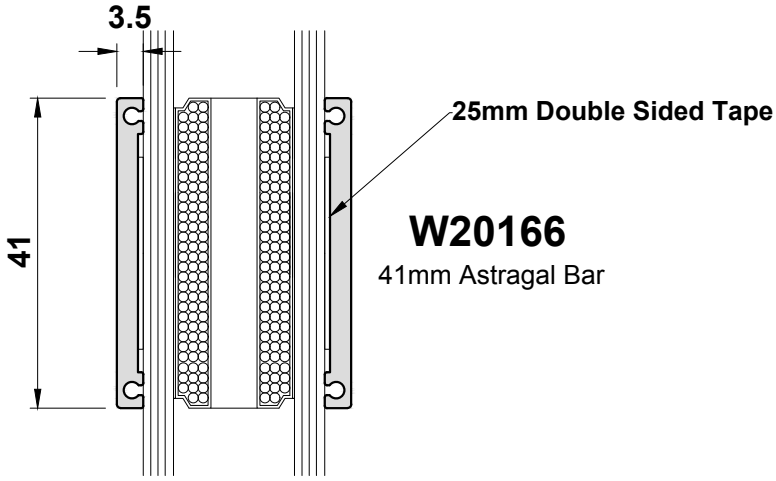

Do Not Scale From This Drawing

Do Not Scale From This Drawing

Section D

Statics

Open Out & In

General Size Limitations are shown on Page A03.

For Wind Loading Limitations, Please Contact The Technical Department - T: 01934 876100

Section E

Construction Drawings

Corner Joint Details

Notes

1. Degrease mitre sections
2. Cover mitred faces with ACSIL04
3. Apply ACSIL013 to cleat chamber
4. Apply ACSIL04 to any fractures formed by crimping to make watertight

Table 1	
KL Colour	Sealant Part Number
Black	ACSIL04BL
White	ACSIL04WP
Clear	ACSIL04CL
KL001	ACSIL04KL001
KL002	ACSIL04KL002
KL003	ACSIL04KL003
KL004	ACSIL04KL004
KL005	ACSIL04KL005
KL006	ACSIL04KL006
KL007	ACSIL04KL007
KL010	ACSIL04KL010
KL011	ACSIL04KL011
KL012	ACSIL04KL012
KL013	ACSIL04KL013

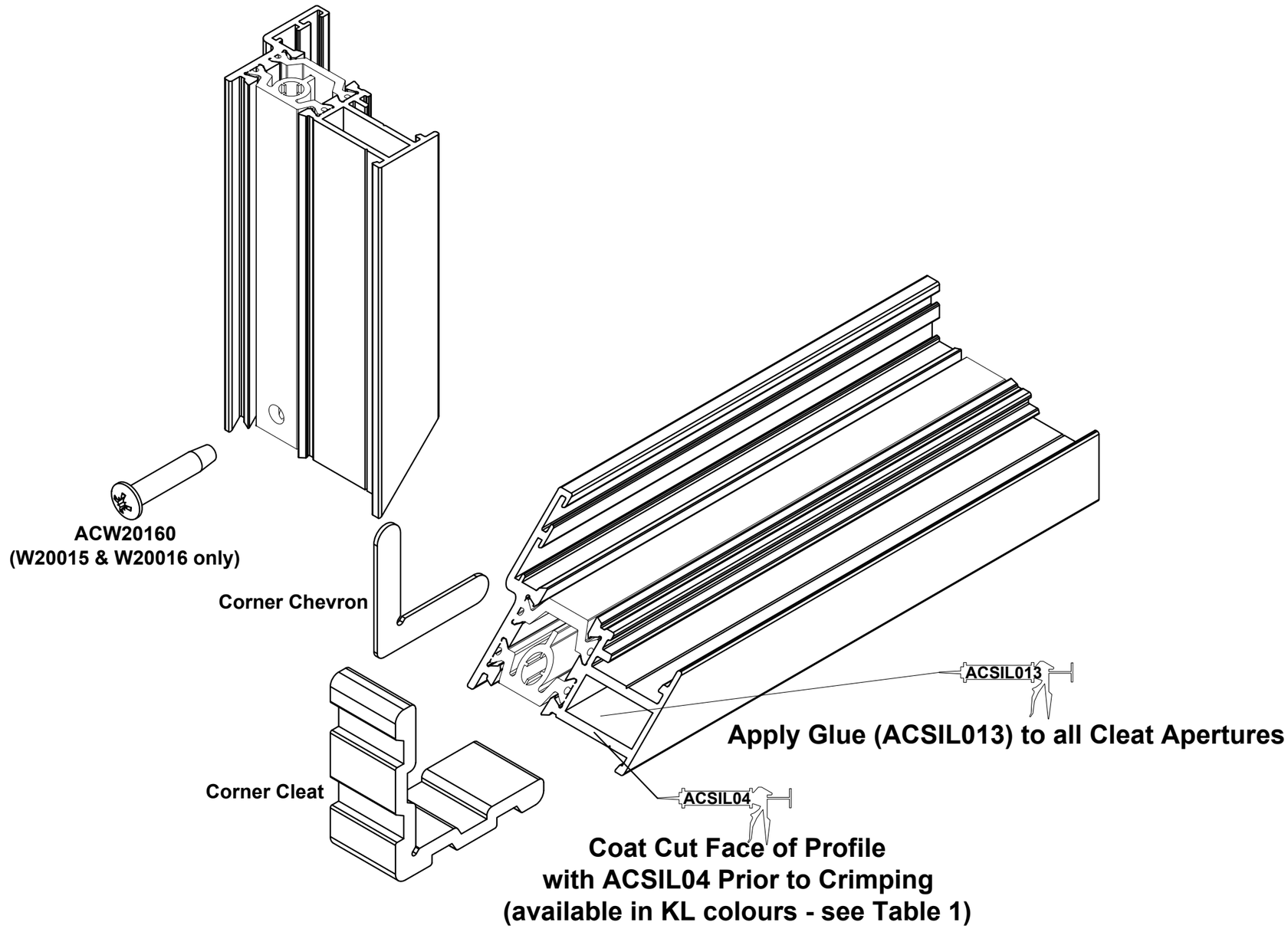

Do Not Scale From This Drawing

Crimping Details

Manual Crimper = WUT024HSZA

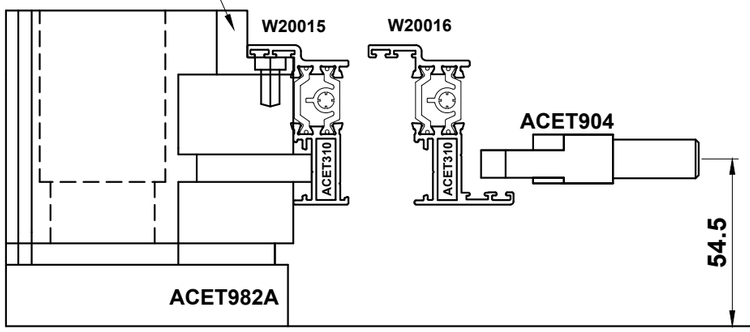

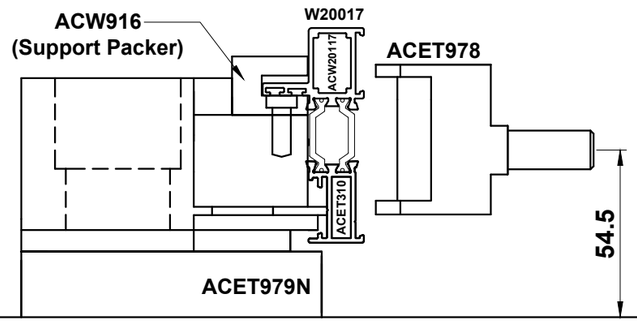

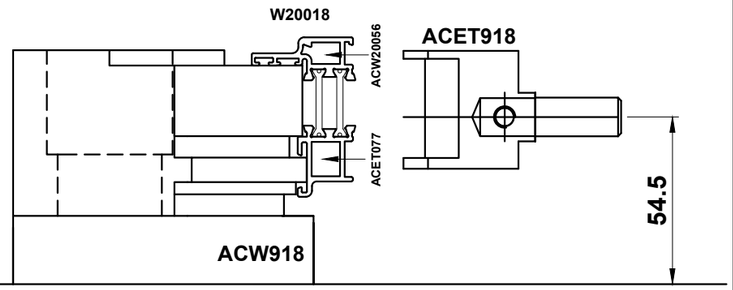

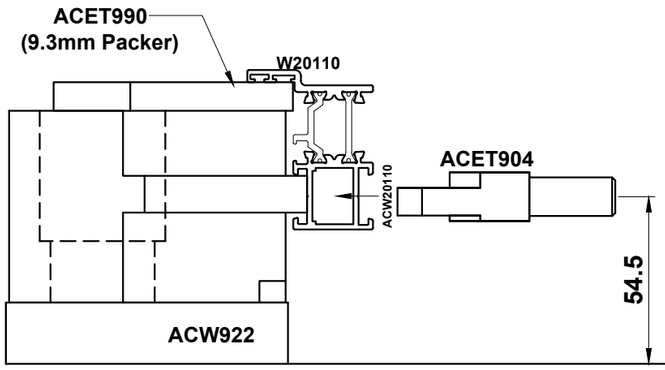

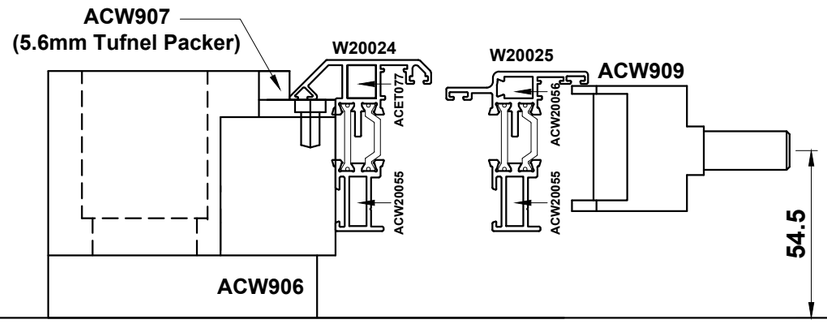

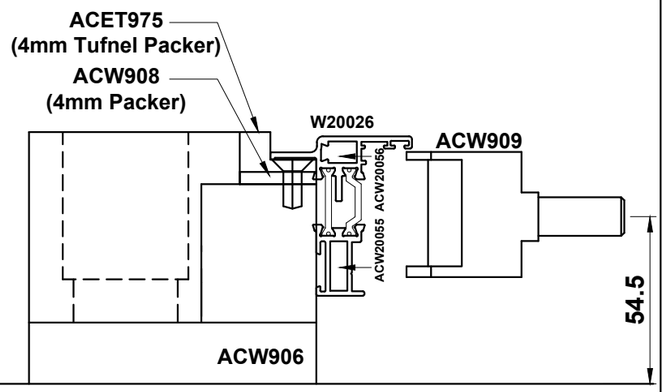

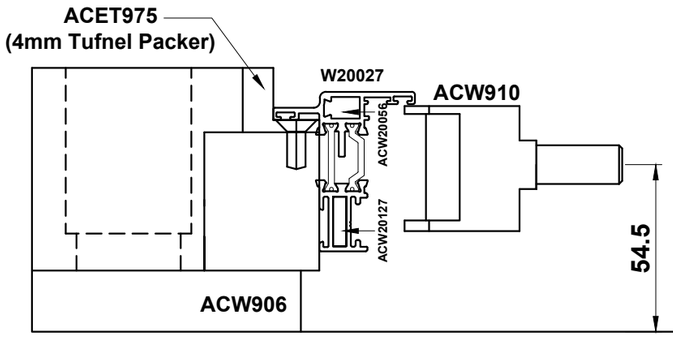

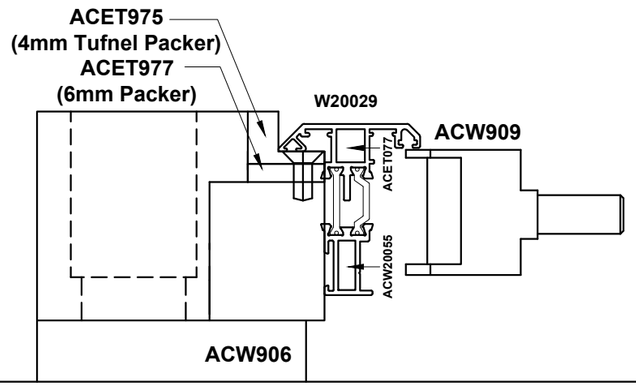

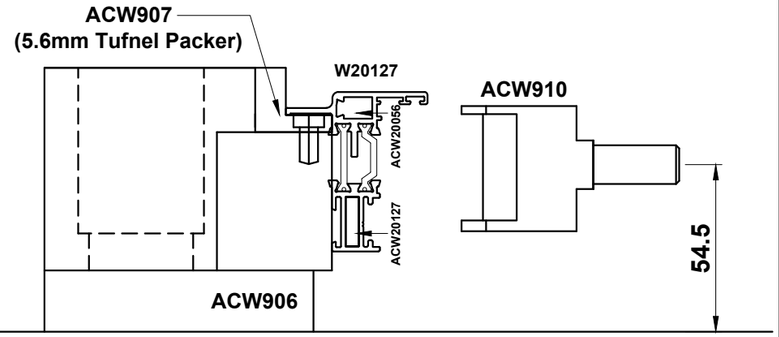

Do Not Scale From This Drawing

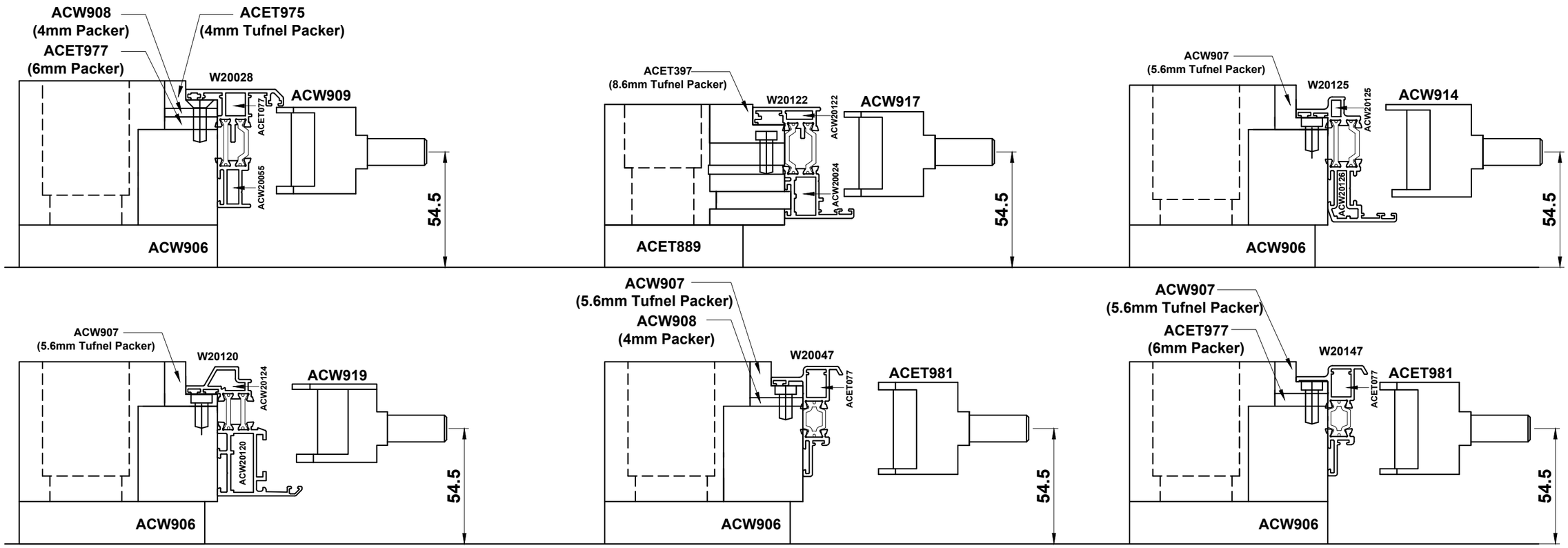

Do Not Scale From This Drawing

Window Drainage

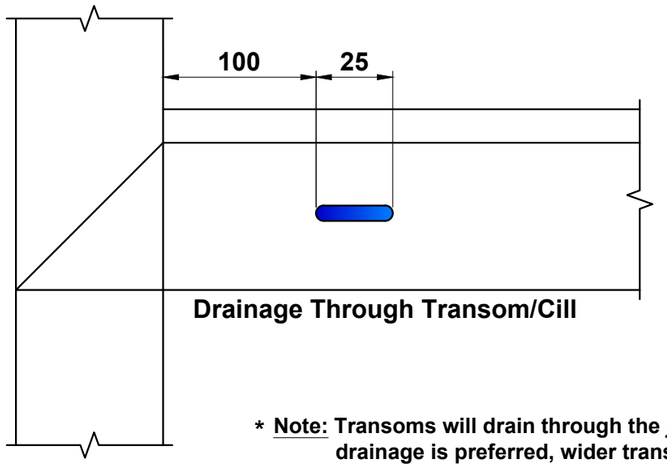

Drainage Through Transom/Cill

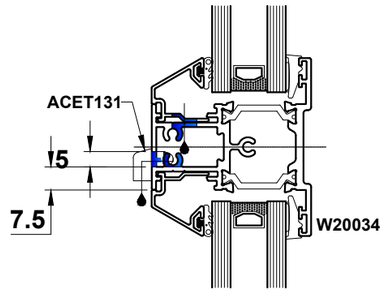

Transom Fixed Light*

* Note: Transoms will drain through the join to the outerframe. If face drainage is preferred, wider transom W20034 must be used.

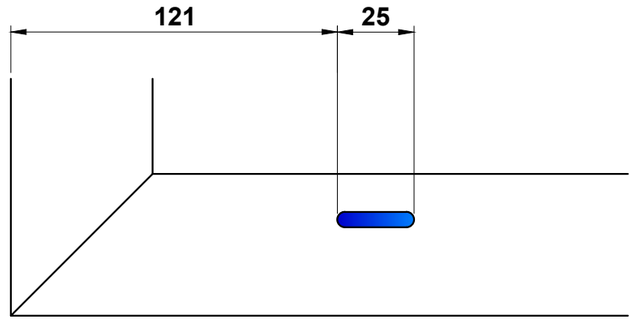

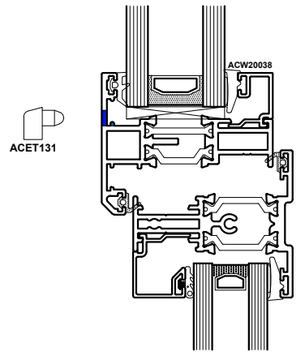

Face Drainage Through Vent
(cannot be used with W20024)

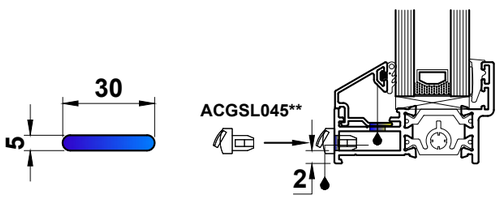

Outerframe Without Cill

**ACGSL045 must be used here as water drains through the front of the cap. ACGSL045 may also be used throughout the system.

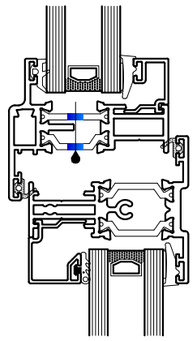

Transom With Vent*

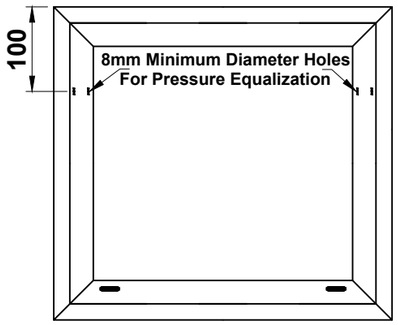

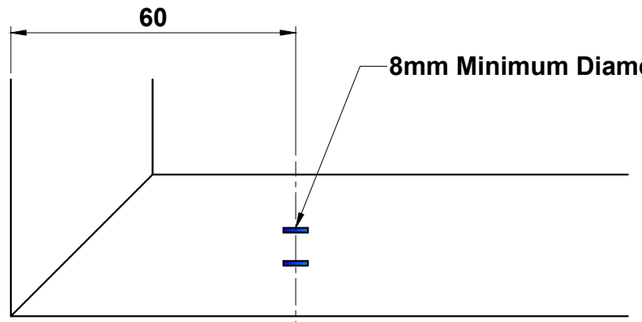

Concealed Drainage Through Vent

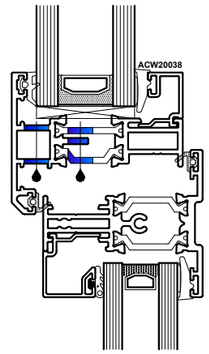

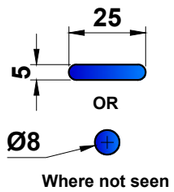

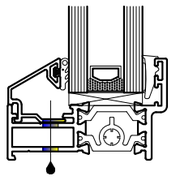

Outerframe With Cill

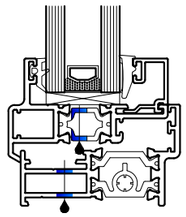

Outerframe With Reverse Adaptor

Important Note: All exposed aluminium should be coated using ACSIL014 or painted to match the frame.

Do Not Scale From This Drawing

Cill Drainage

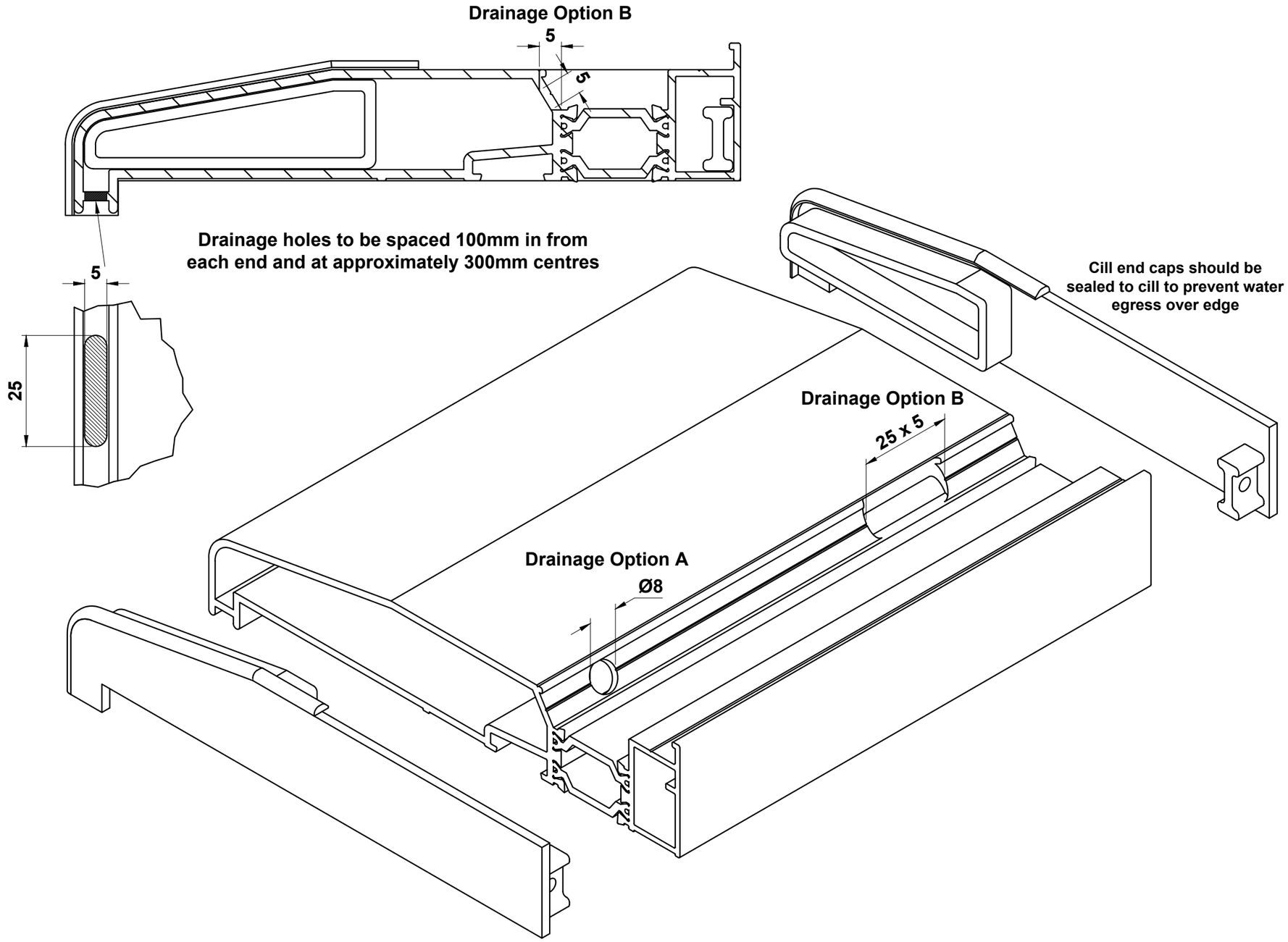

Do Not Scale From This Drawing

Mullion/Transom Detail

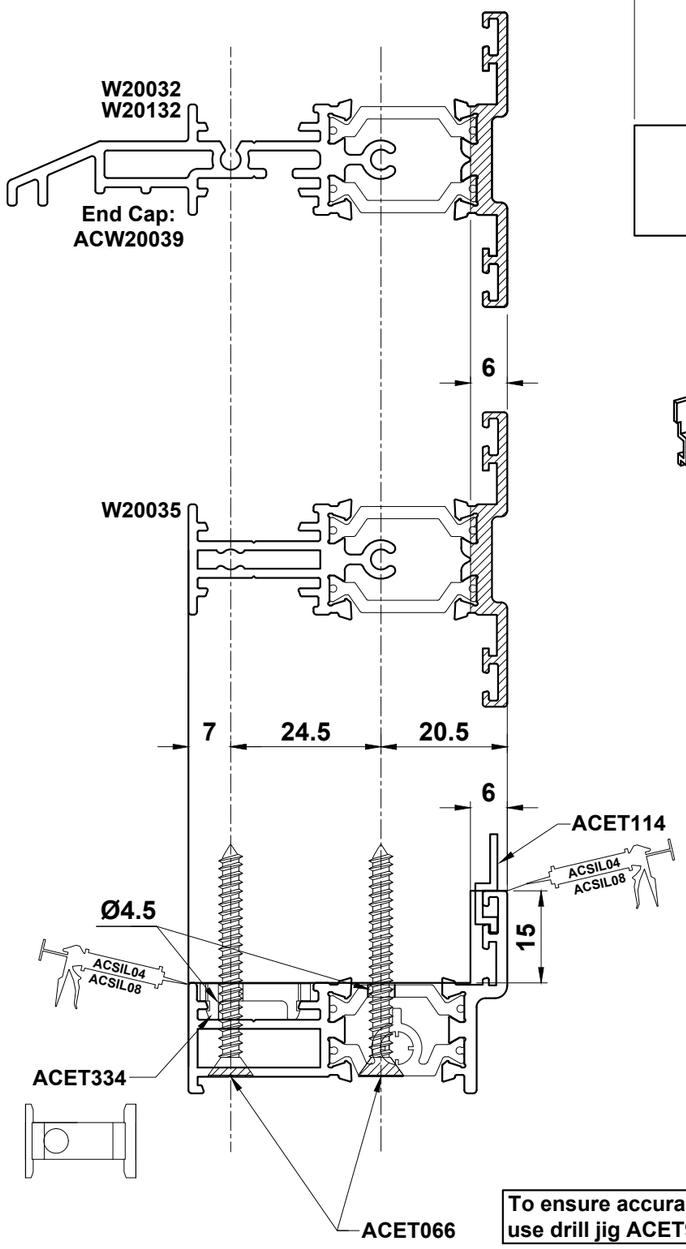

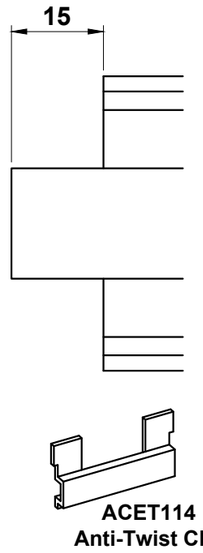

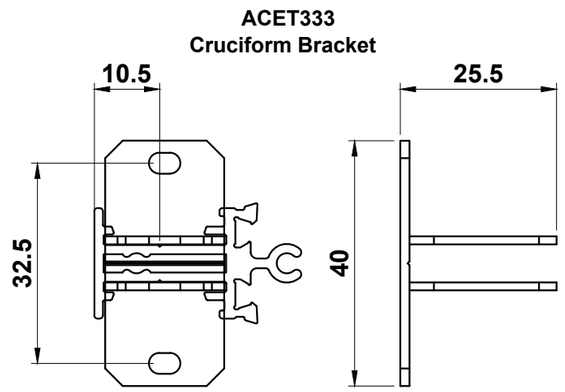

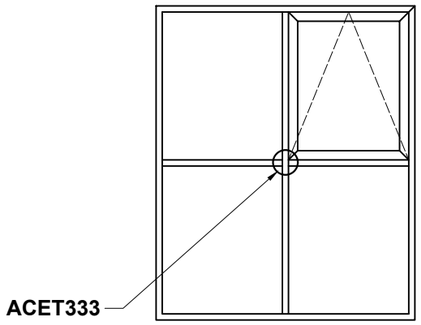

To ensure accuracy use drill jig ACET945

Note:
End mill cutters can be ordered through Smart Systems Ltd.
Please contact the Technical Department for an order form.
Standard delivery is 2-3 weeks approx.

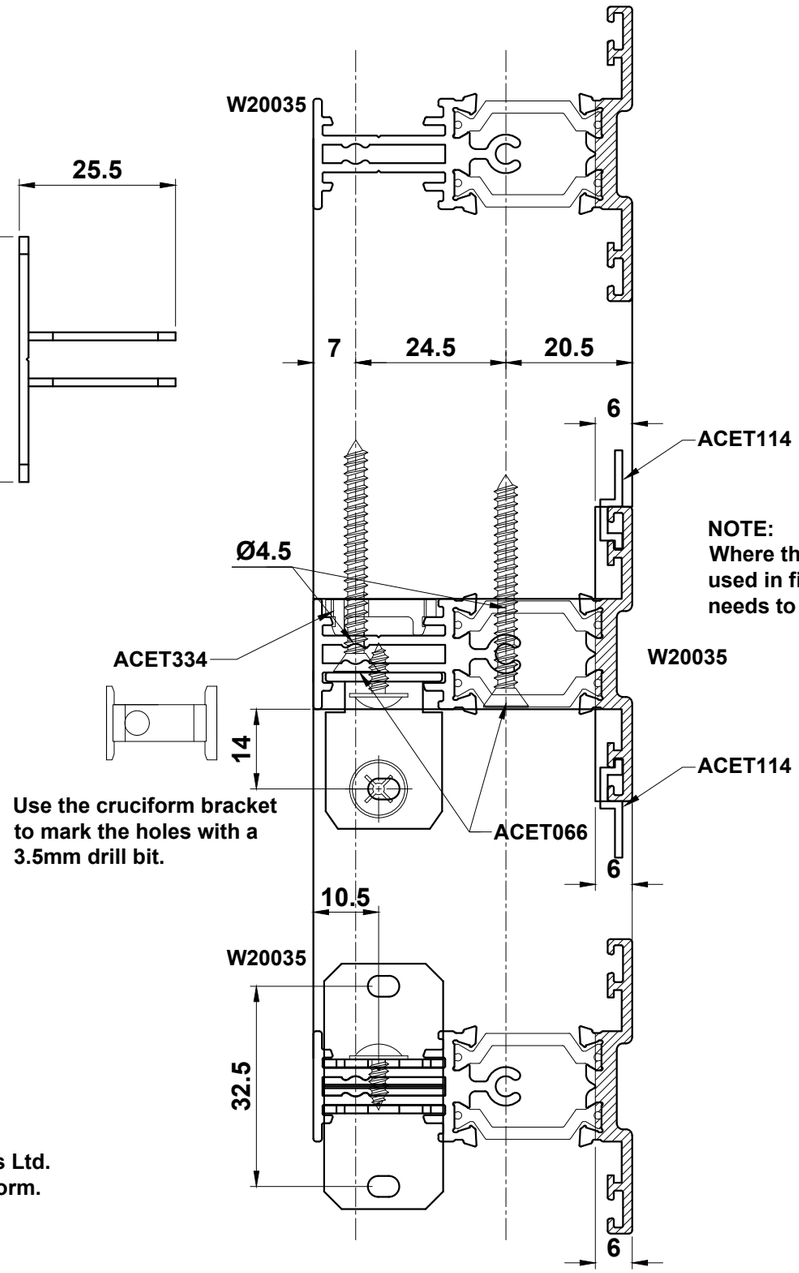

Use the cruciform bracket to mark the holes with a 3.5mm drill bit.

NOTE:
Where the cruciform is used in fixed lights, the bead needs to be notched.

Do Not Scale From This Drawing

Mullion/Transom Detail

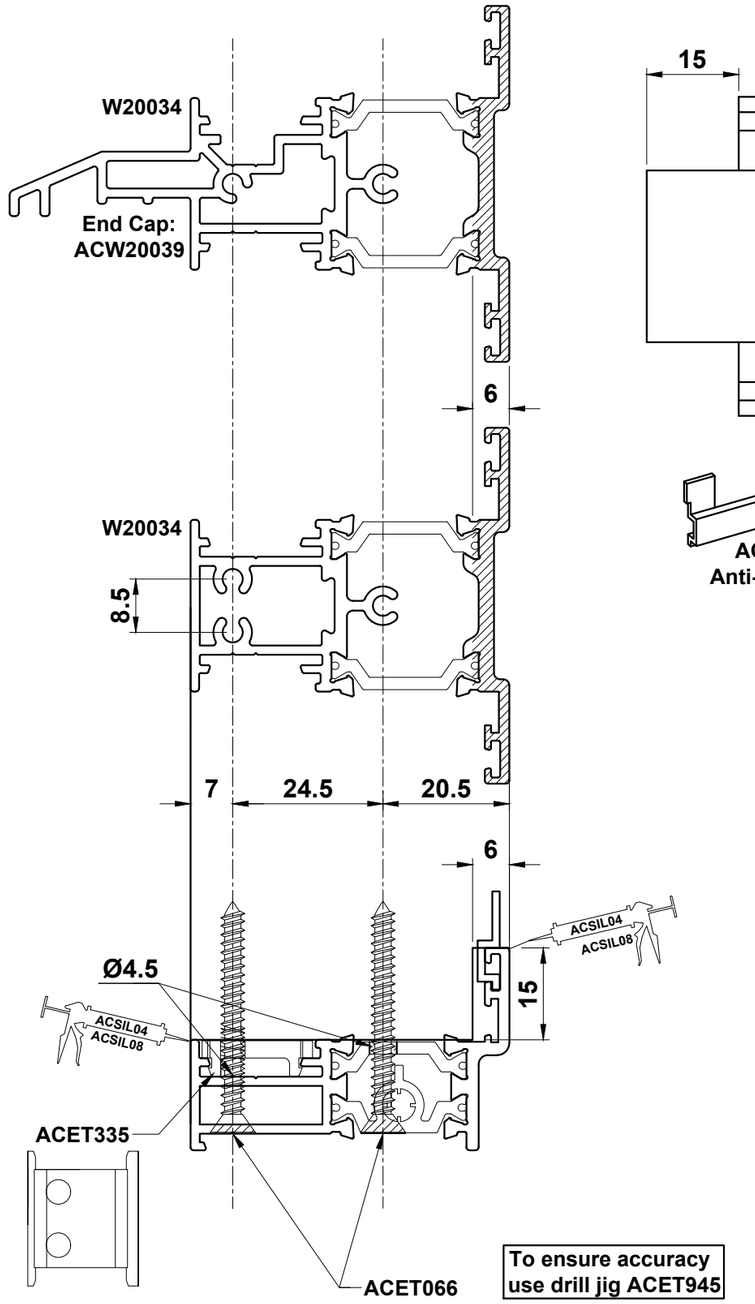

To ensure accuracy use drill jig ACET945

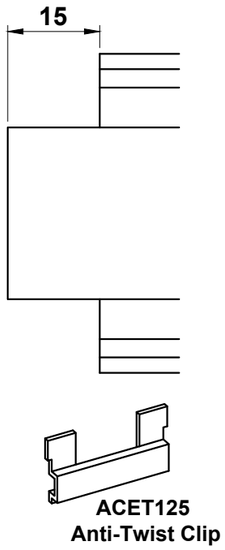

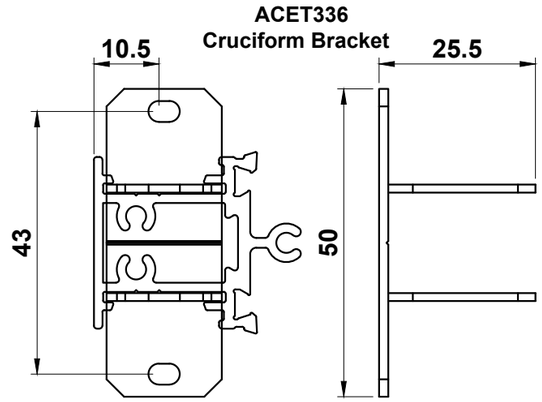

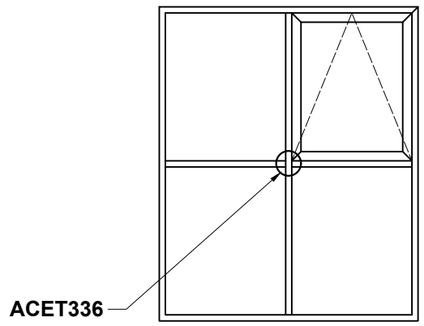

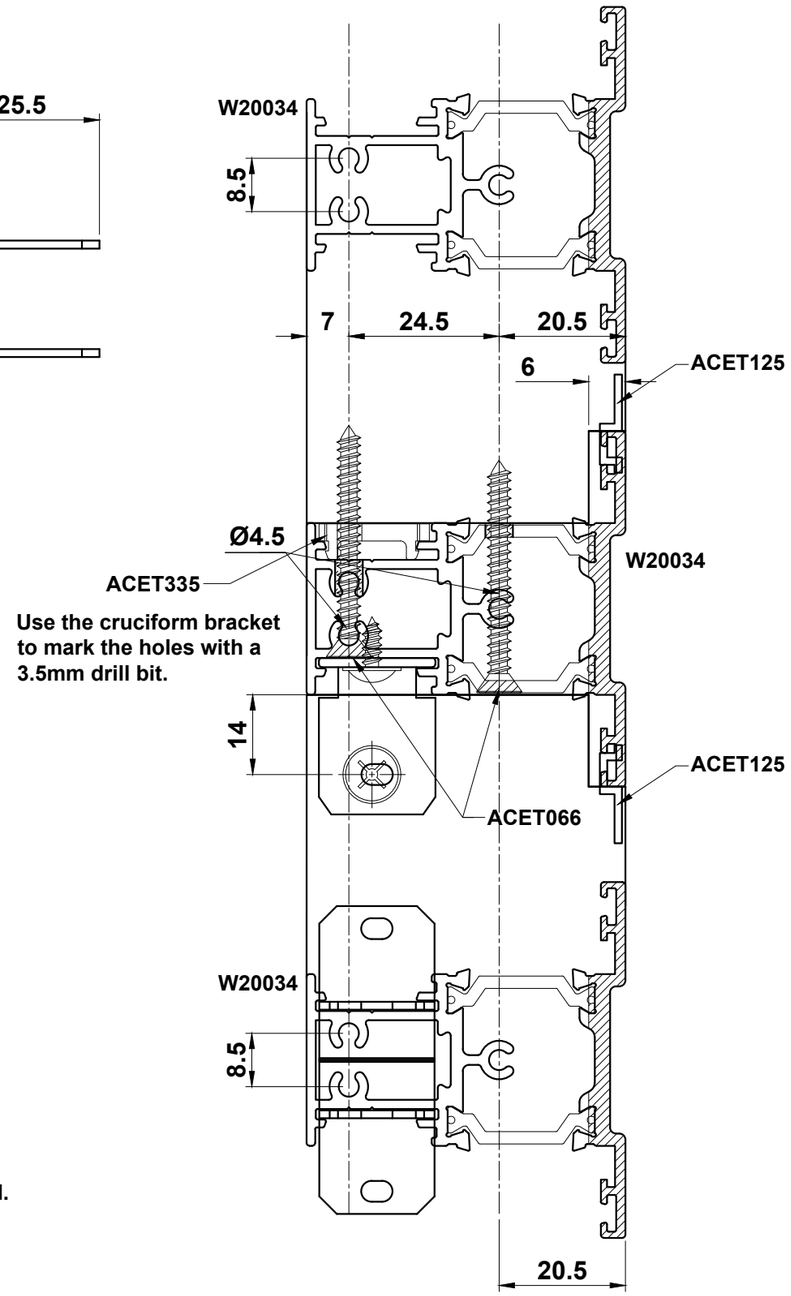

Note:
End mill cutters can be ordered through Smart Systems Ltd.
Please contact the Technical Department for an order form.
Standard delivery is 2-3 weeks approx.

W20032 & W20039 Transom Detail

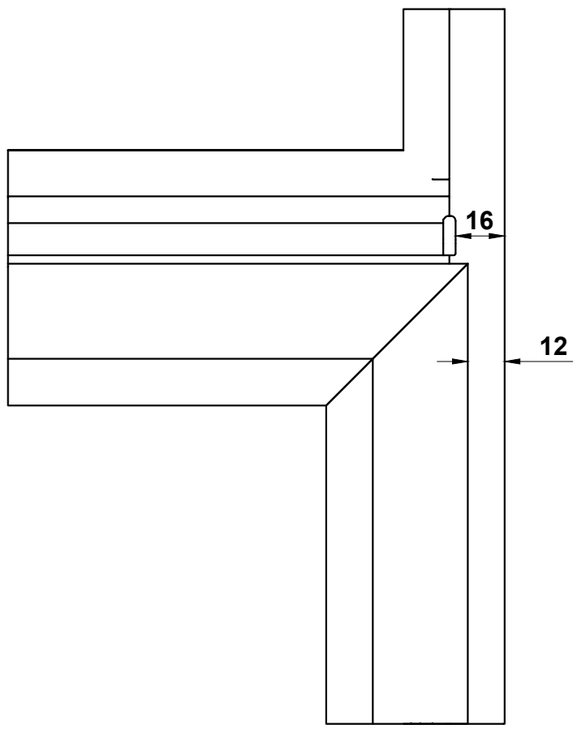

ACW20039 End Caps
(2mm thick)

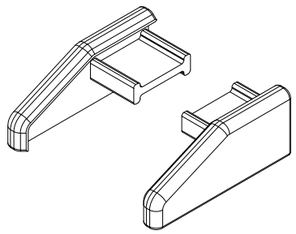

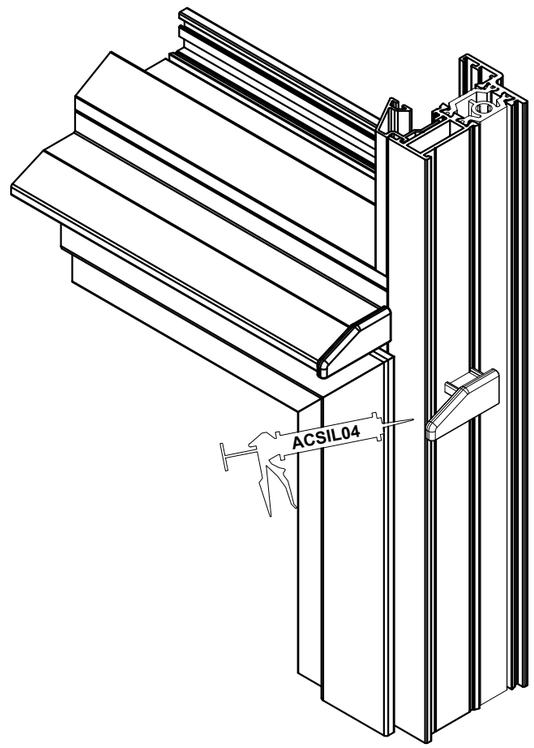

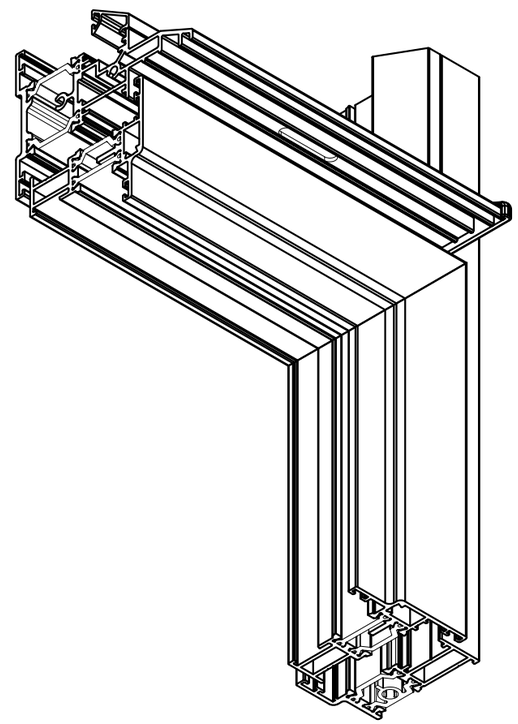

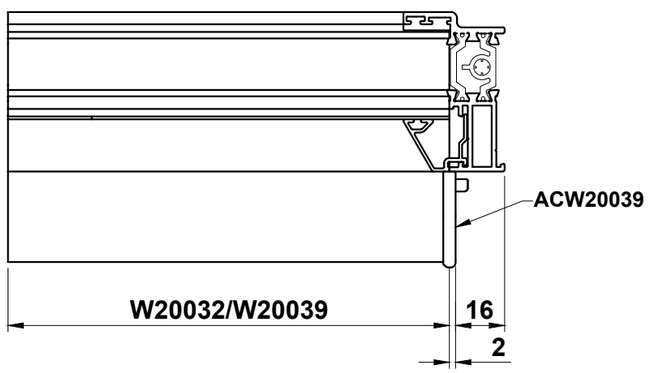

Do Not Scale From This Drawing

W20037 Transom & Dummy Transom Detail

W20018 with W20037 Transom

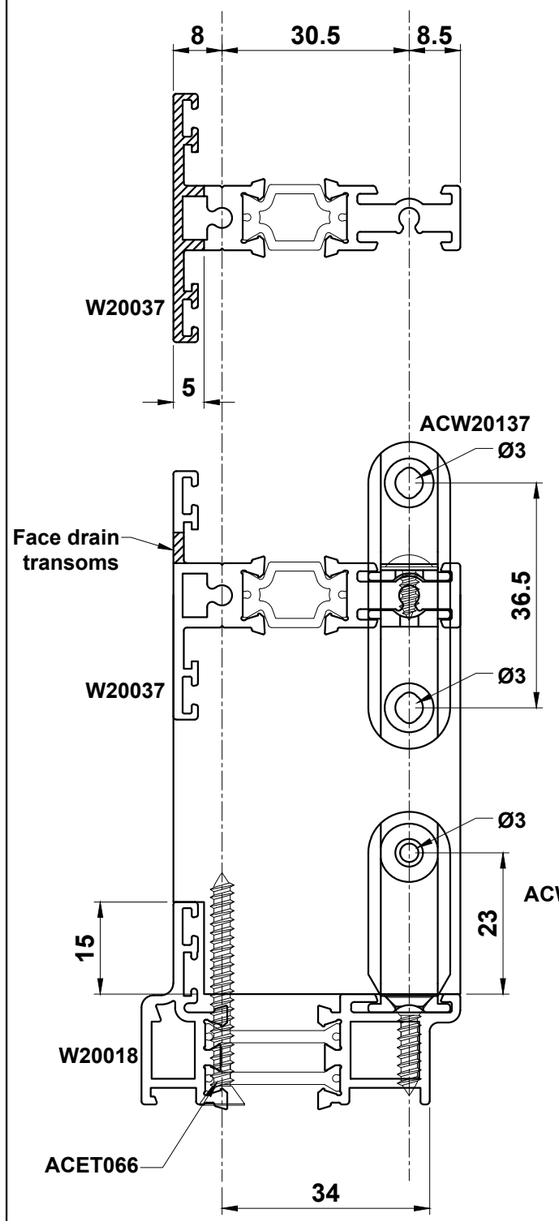

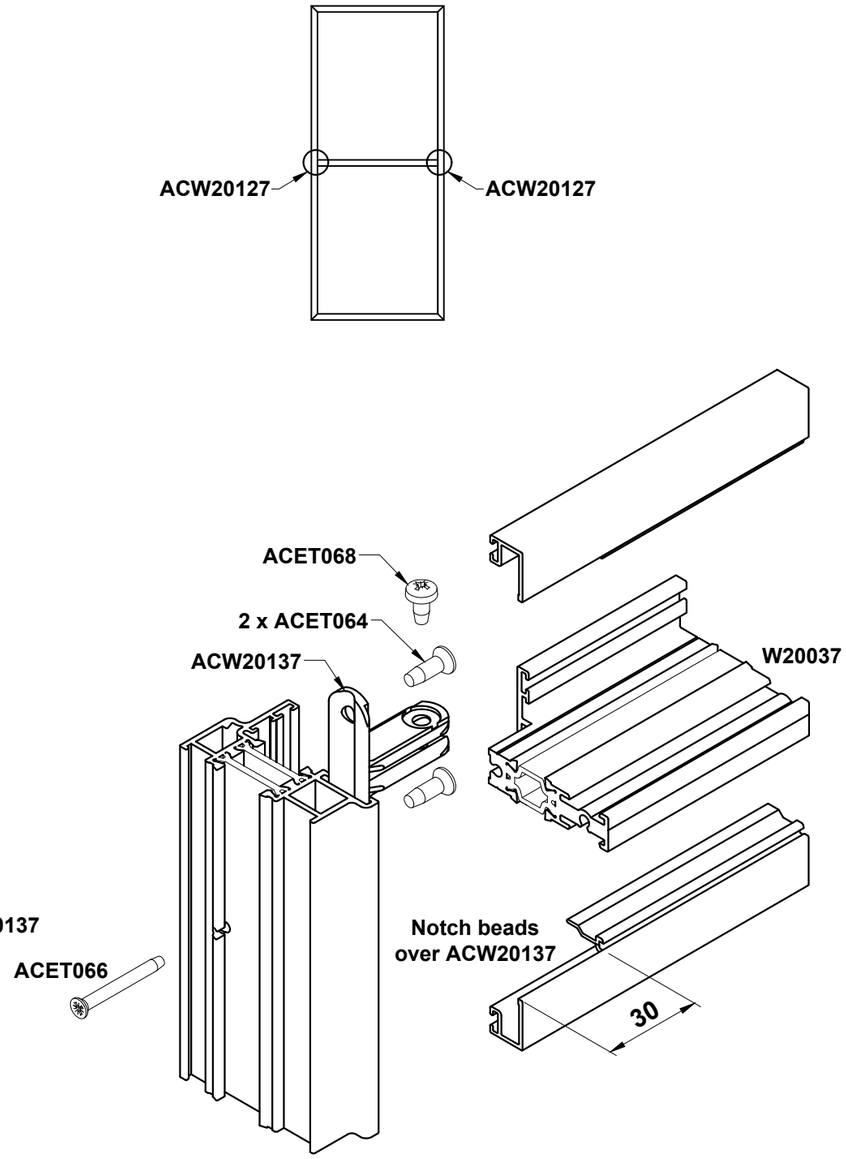

W20025 with W20037 Dummy Transom

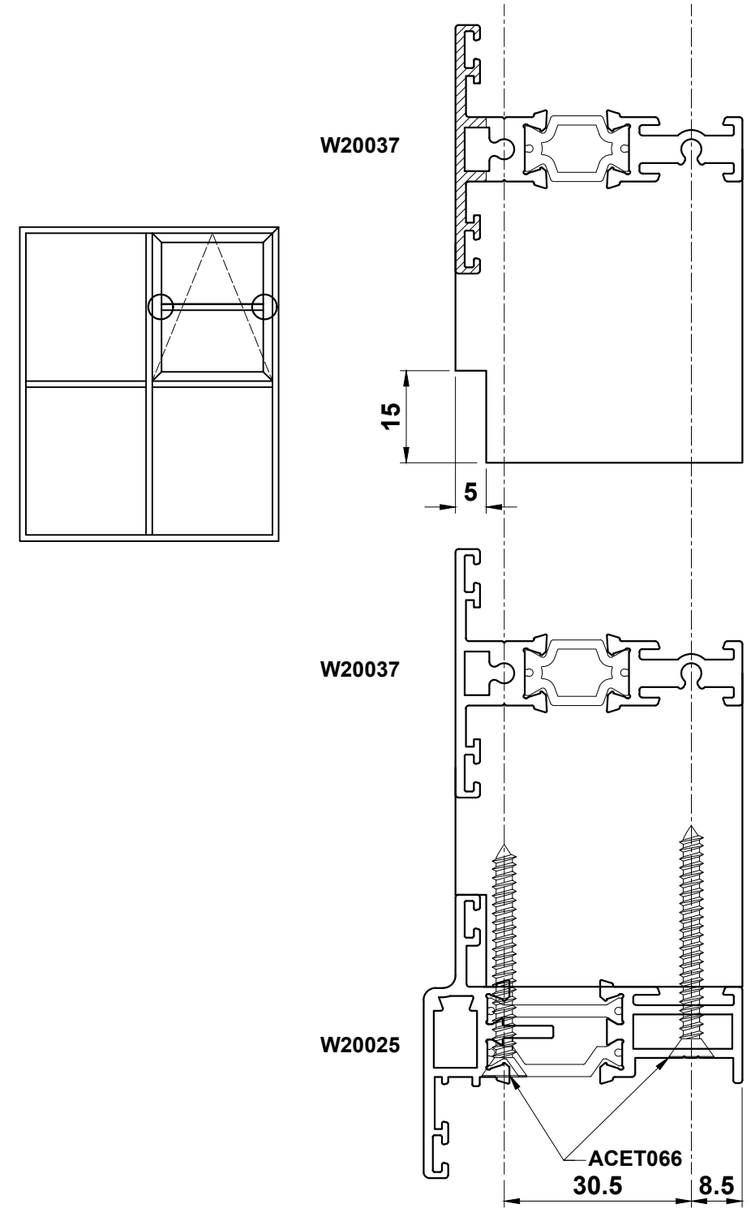

Friction Stay Details

To ensure accuracy use drill jig ACET911N.
Numbers indicate stay length in inches, numbers followed by an 'S' are used for side hung stays.

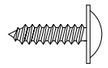

ACET070 = Recommended Screw

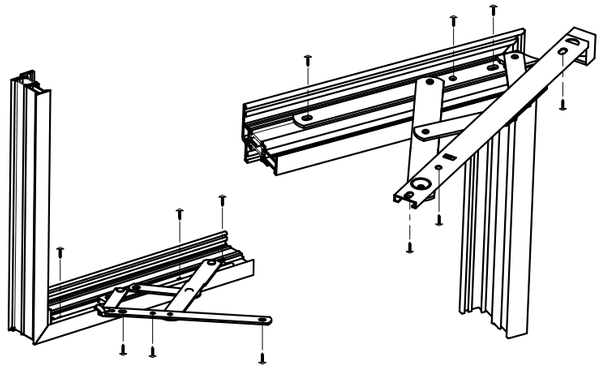

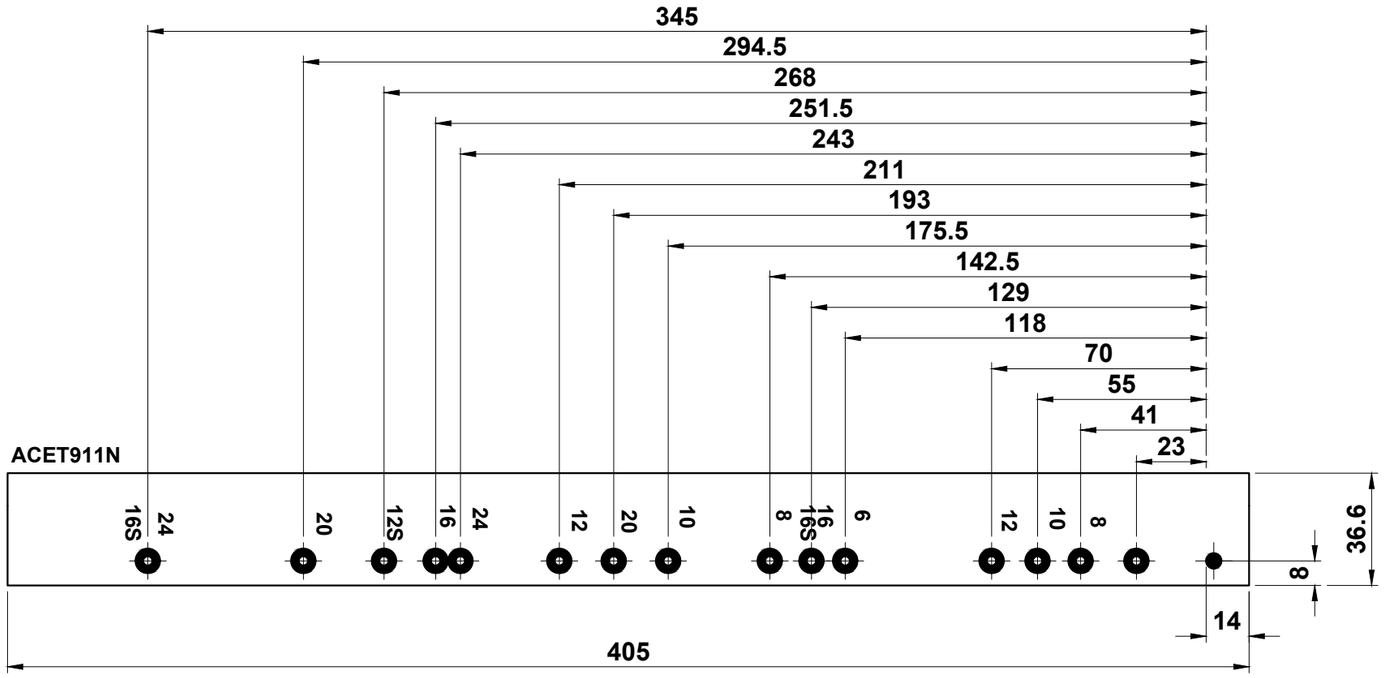

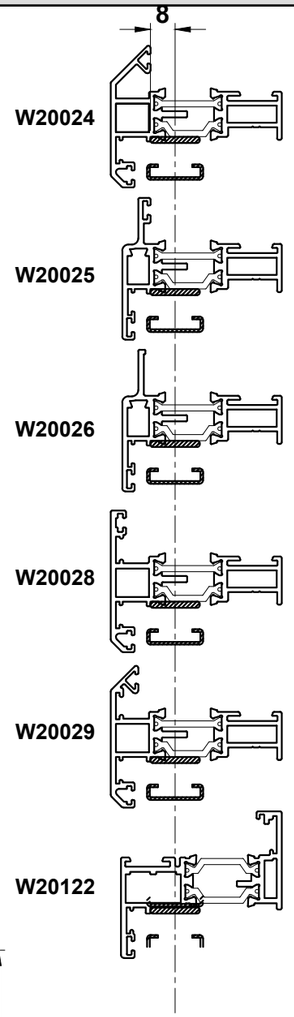

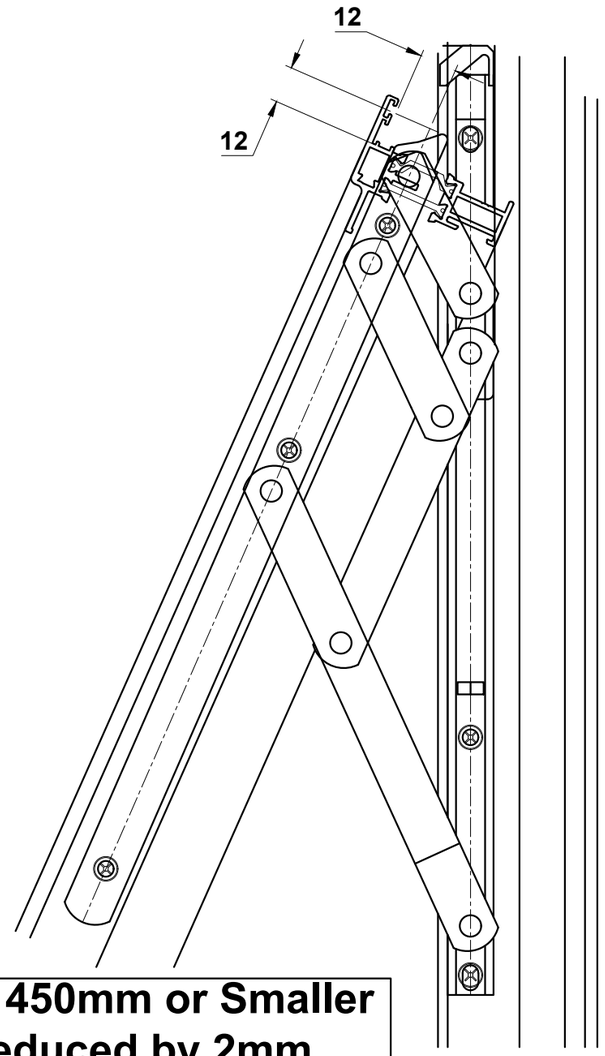

Vent Sizes 450mm or Smaller to be Reduced by 2mm

Important Note:

When using ACW20060 as a window hinge with the ACW201-205 reverse espagnolette locks, a further 2mm must be deducted from the sash locking edge for sashes under 600mm OR 1mm for sashes between 601-700mm.
If in doubt, contact our technical department for further information - Tel: 01934 876 100

Do Not Scale From This Drawing

Egress Friction Stay Details

ACETME13
13mm Stack Egress Hinge

Jig = ACETME93

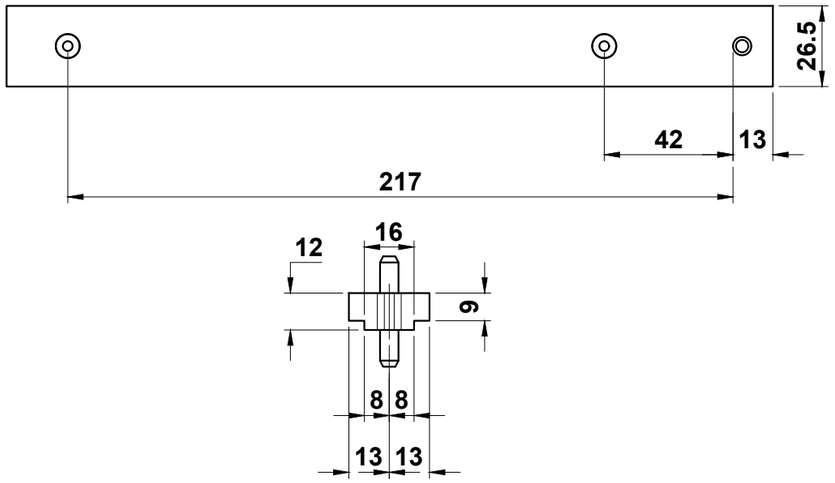

Vent Sizes 450mm or Smaller to be Reduced by 2mm

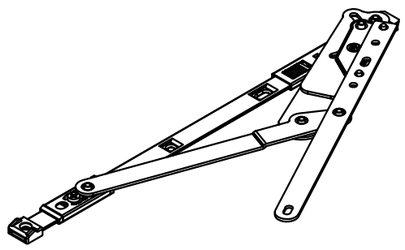

Alitherm Heritage

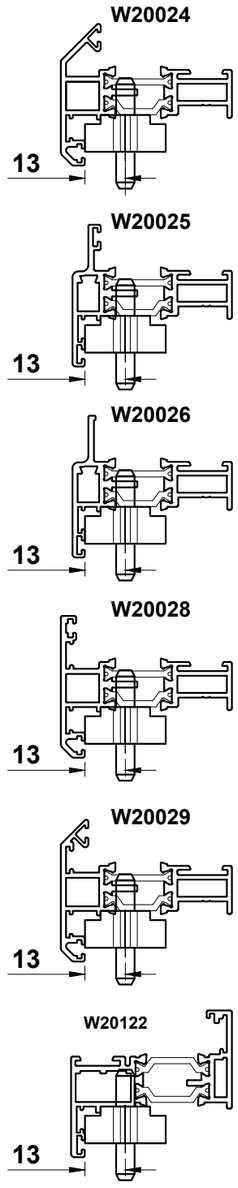

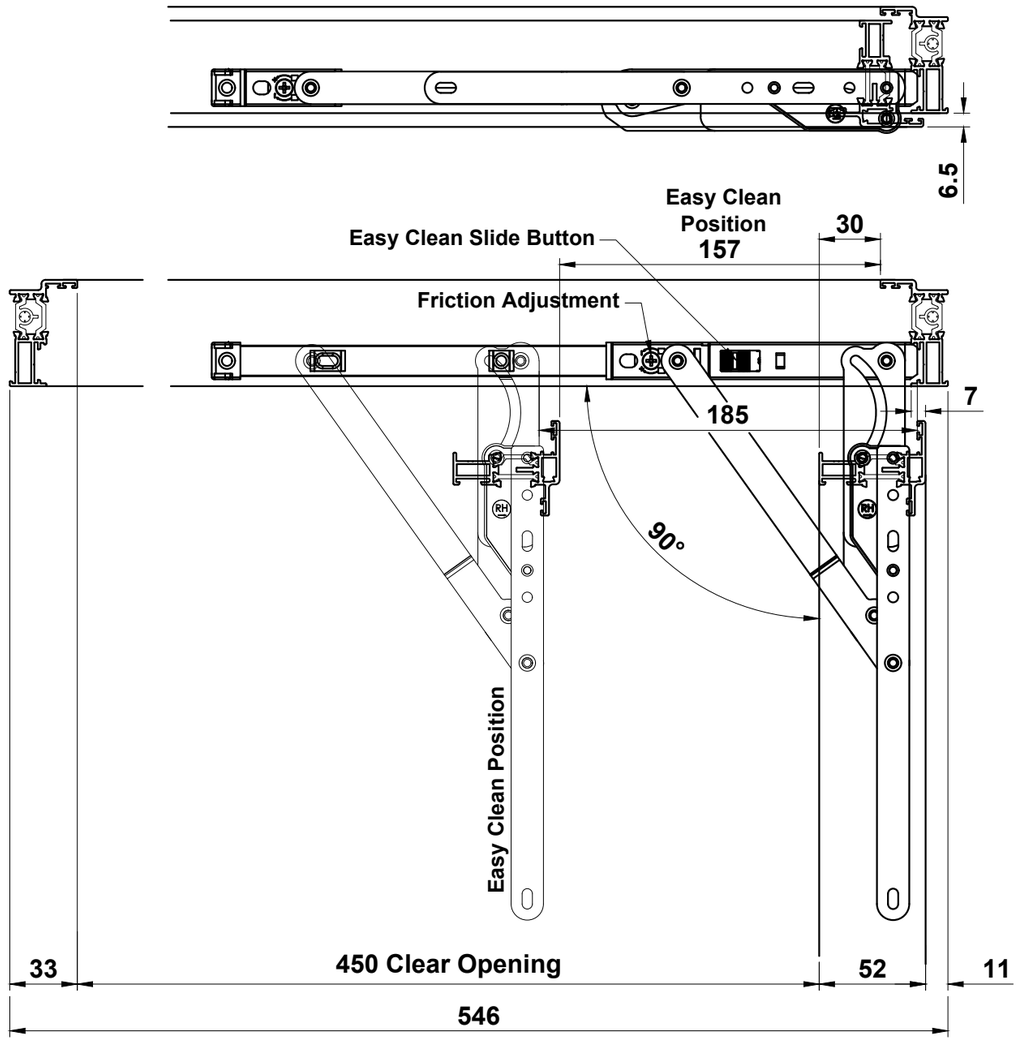

For further information regarding clear openings, please see the Smart Systems' White Paper Document B

Friction Stay Accessories

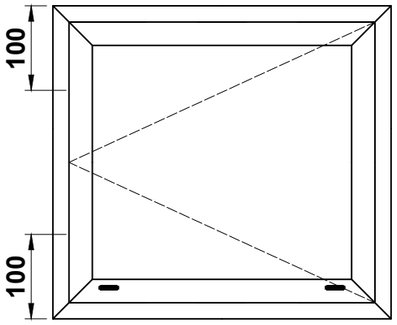

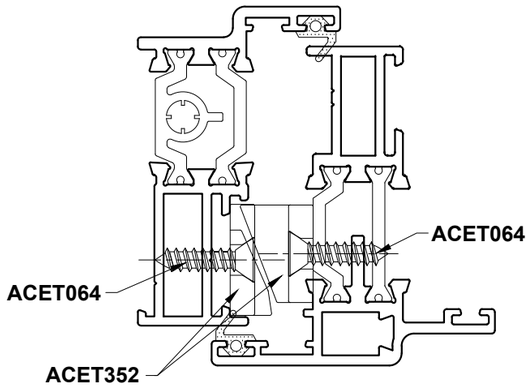

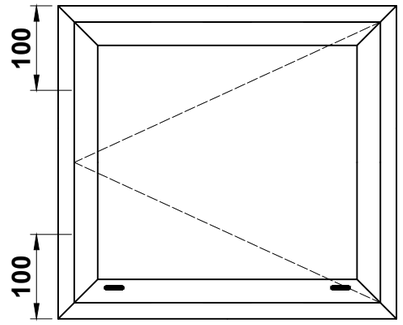

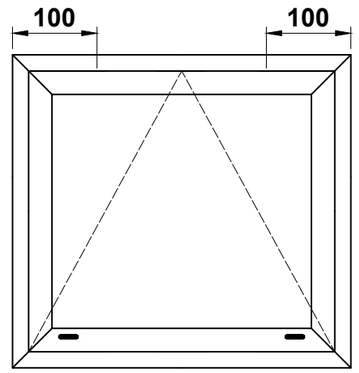

Please Note:

- **2 pairs per opening vent to be fitted to hinged side of window**
- **Each pair must be fitted with the wedge centre within 100mm of each hinge and in the centre of the window when sash height is greater than 800mm.**

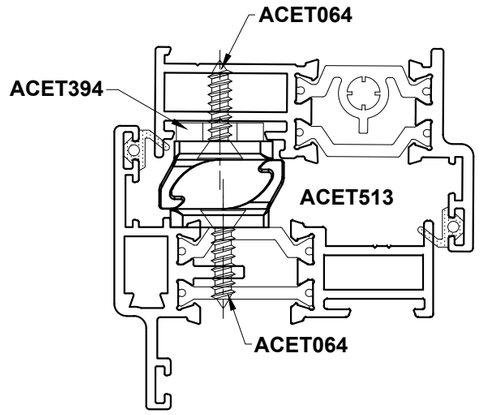

Please Note:

- **2 pairs per opening vent to be fitted to hinged side of window**
- **Each pair must be fitted with the hook centre within 100mm of each hinge**

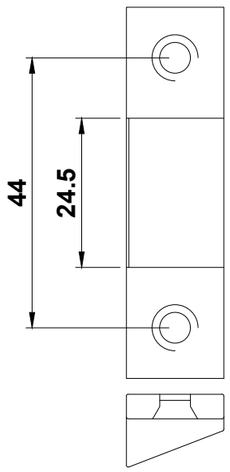

Sash Wedge

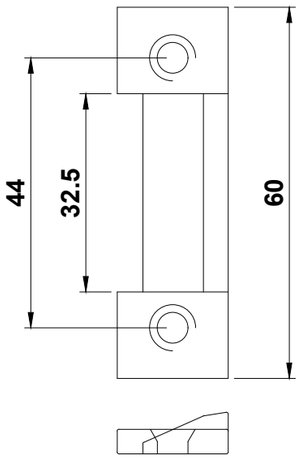

Outer Frame Wedge

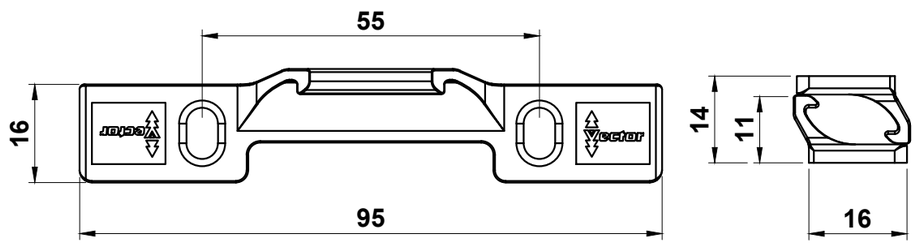

Do Not Scale From This Drawing

Espag Locking Details Using ACW20028 & ACW20029

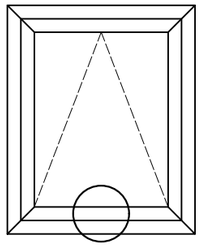

Important Note:

When using ACW20060 as a window hinge with the ACW201-205 reverse espagnolette locks, a further 2mm must be deducted from the sash locking edge for sashes under 600mm OR 1mm for sashes between 601-700mm.

If in doubt, contact our technical department for further information - Tel: 01934 876 100

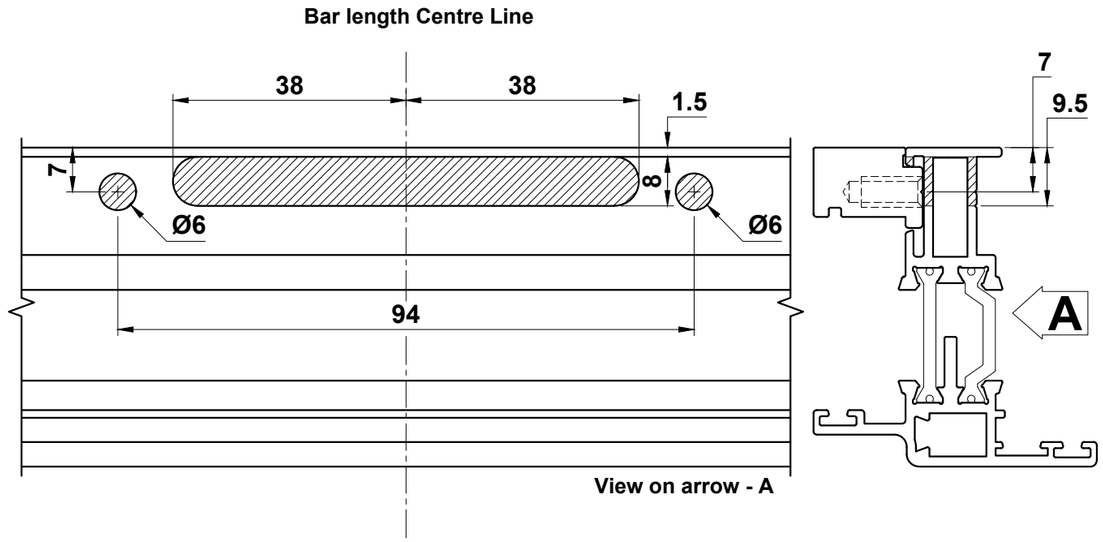

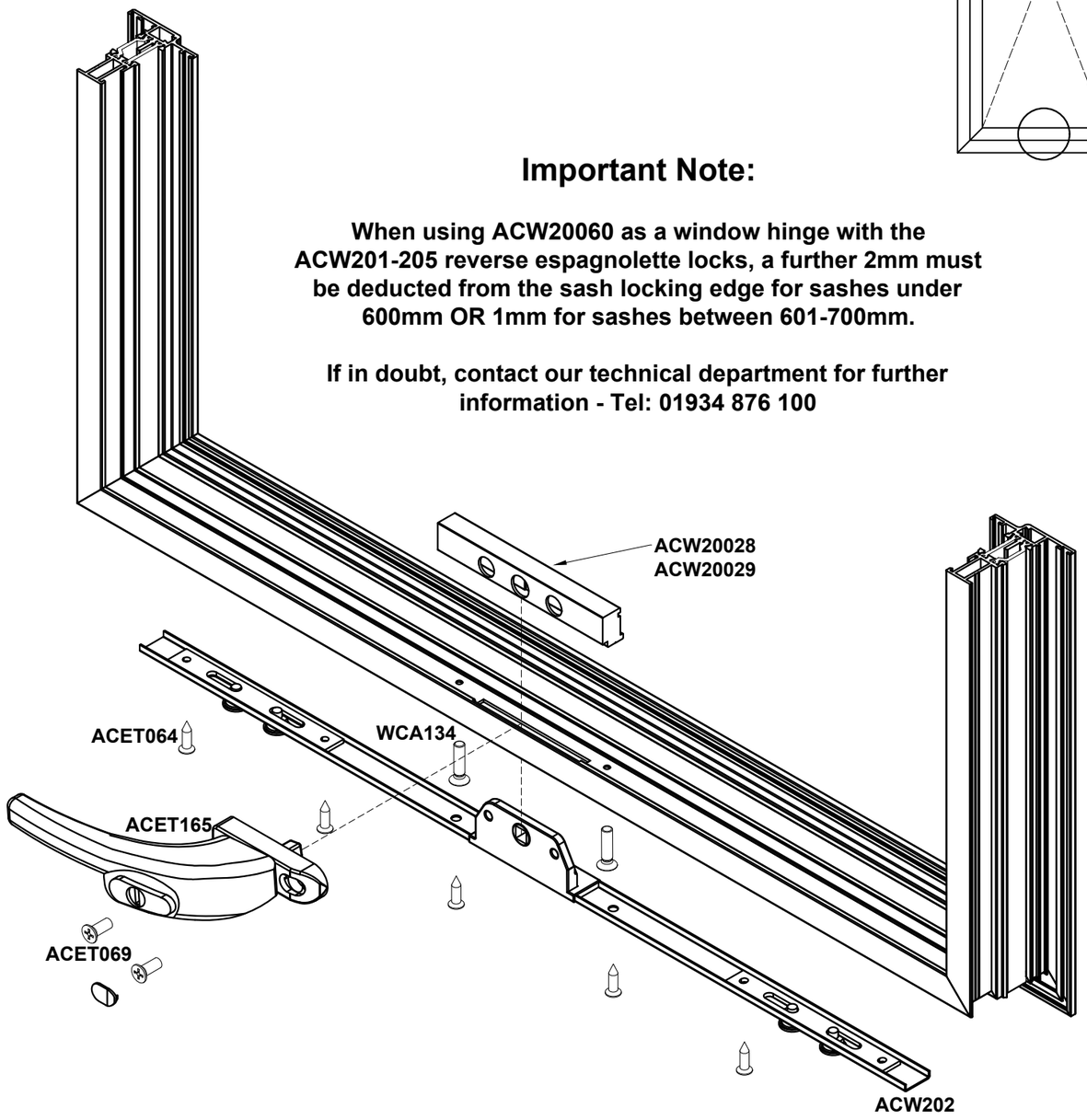

Espagnolette Fixing Block assembly

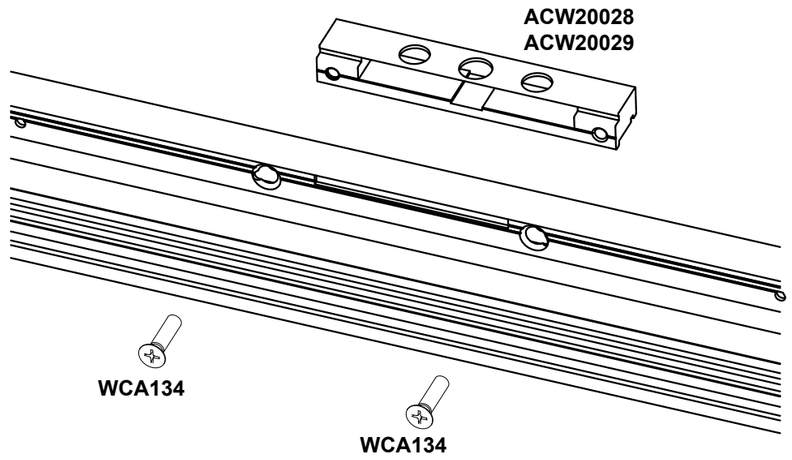

Do Not Scale From This Drawing

Espag Locking Details Using ACW20128 & ACW20129

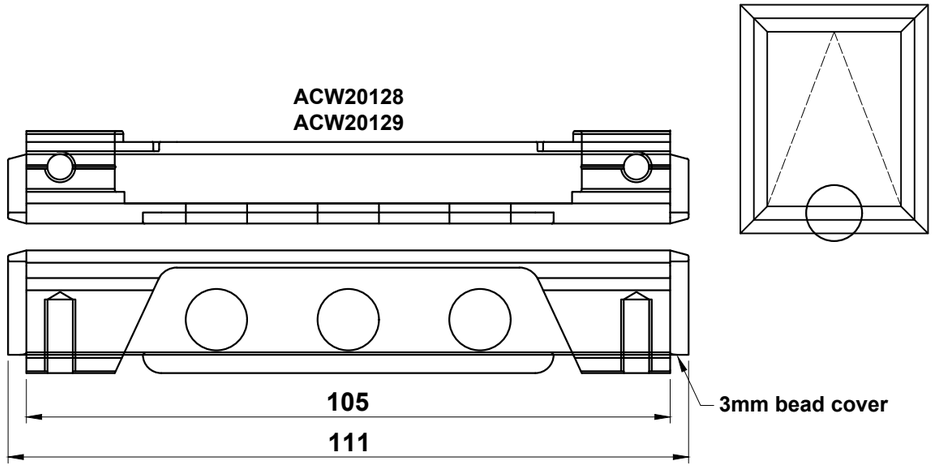

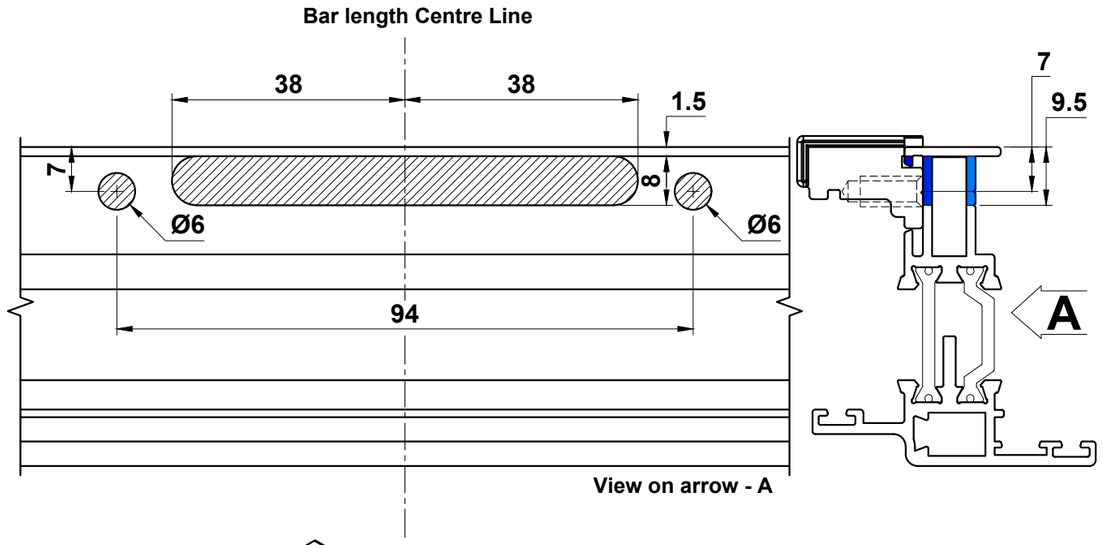

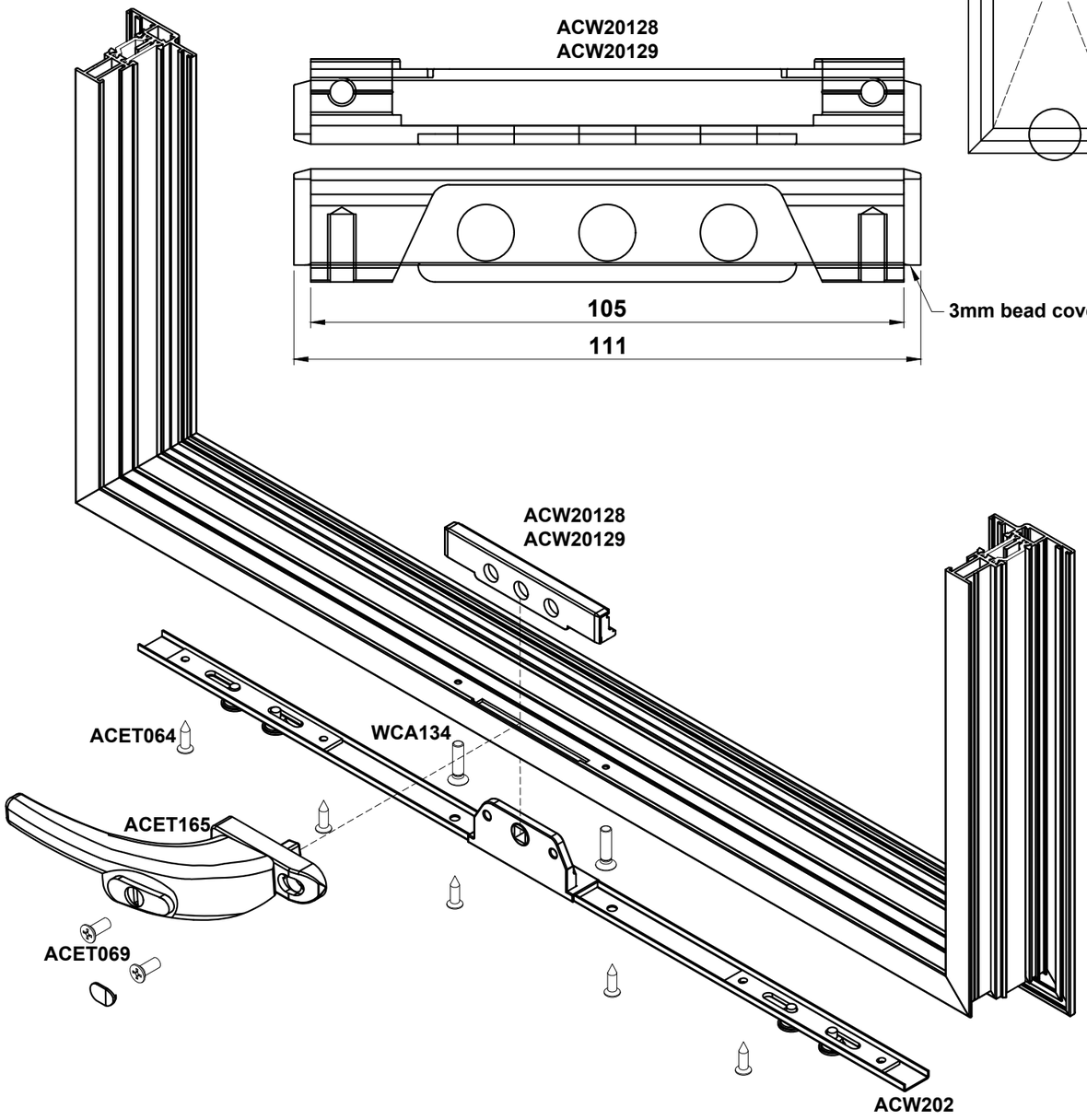

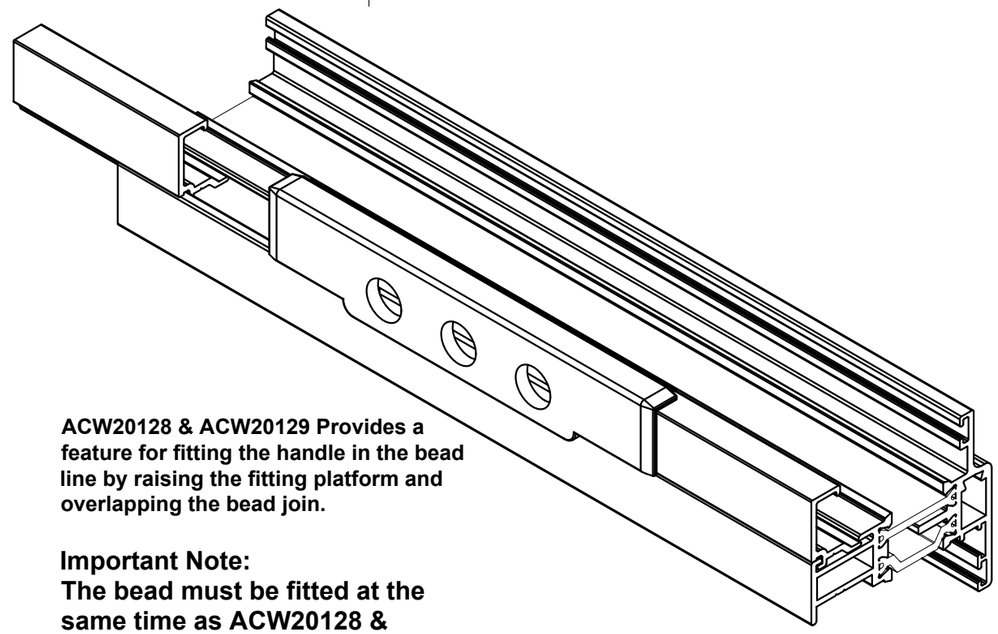

ACW20128 & ACW20129 Provides a feature for fitting the handle in the bead line by raising the fitting platform and overlapping the bead join.

Important Note:
The bead must be fitted at the same time as ACW20128 & ACW20129. The bead cannot be fitted afterwards.

Do Not Scale From This Drawing

Espag Locking Details with ACET165, ACW20100 Monkey Tail & ACW20101 Bulb End Handles

ACET165 Handle Prep

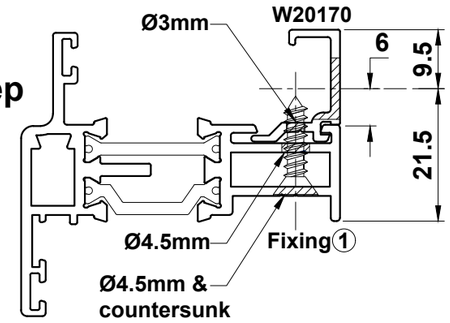

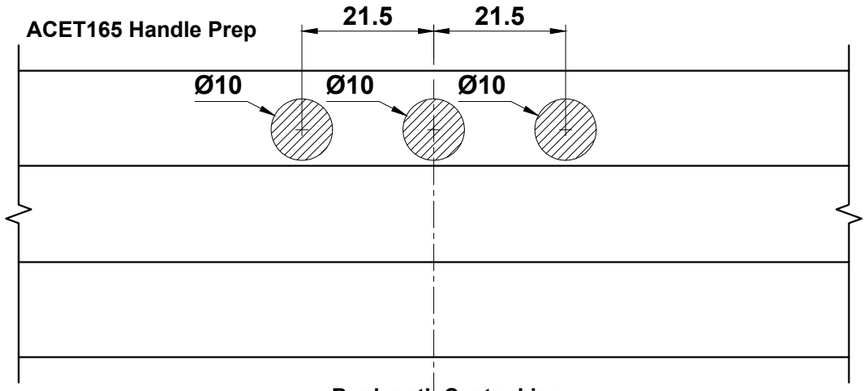

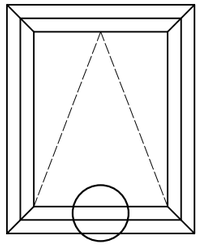

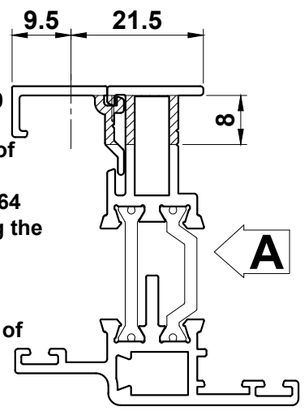

Steps:

1. Cut bead to length and align centre of bead with centre of sash
2. Secure bead into sash using ACET064 screws as shown (Fixing 1) ensuring the bead cannot move
3. Route and drill for lock and handle
4. Remove bead and assemble sash
5. Refit bead and secure at a minimum of 300mm centres
6. Fit espag locking rod and handle.

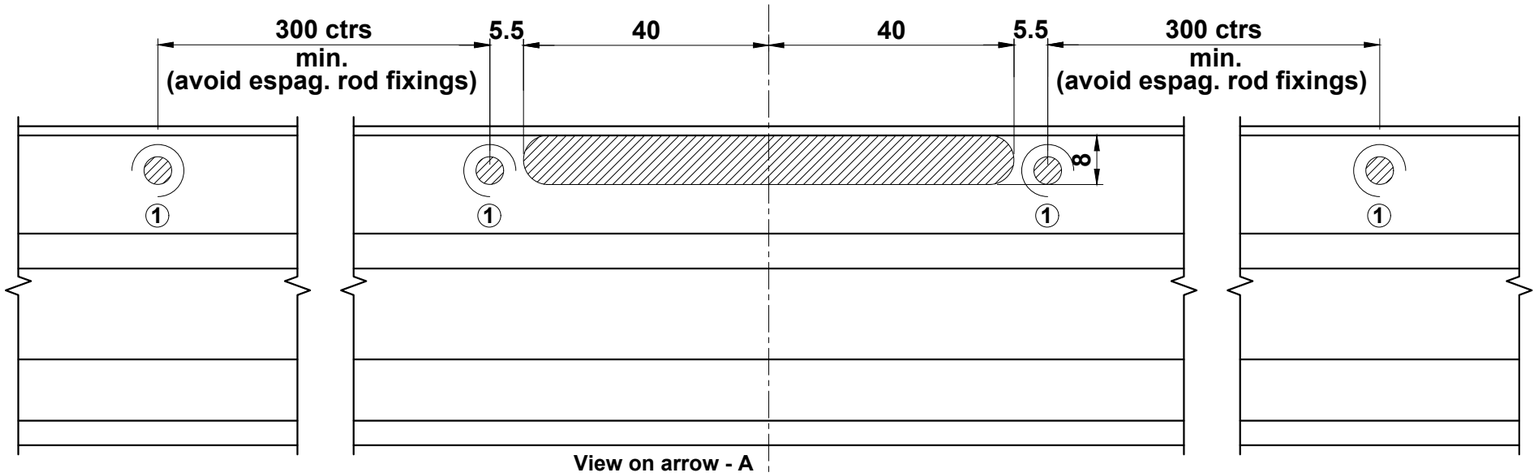

ACW20100 Monkey Tail & ACW20101 Bulb End Handle Prep

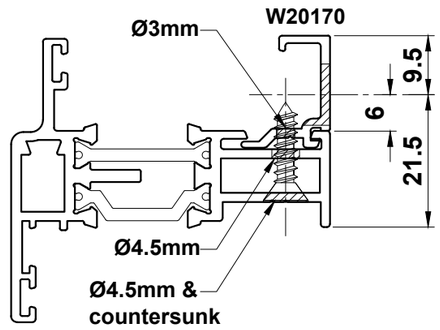

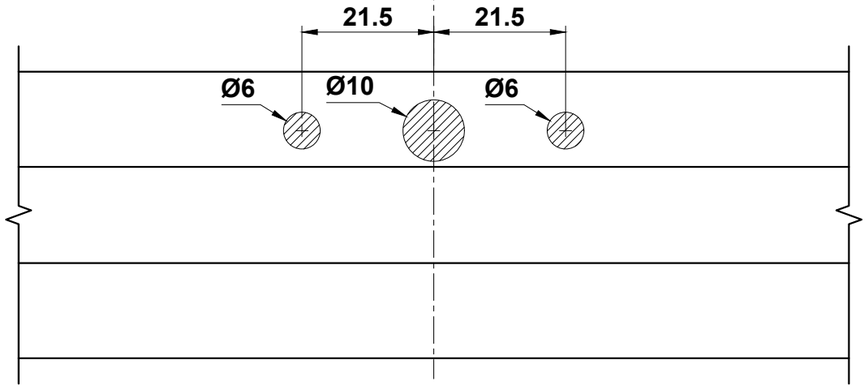

Do Not Scale From This Drawing

W20122 Espag Locking Details

Part Code	Rod Length (mm)	Number of Keeps	Sash Rebate Size ('A')	
			Minimum	Maximum
ACET301L	335	2	340	505
ACET301R				
ACET302L	500	2	506	755
ACET302R				
ACET303L	750	2	756	1005
ACET303R				
ACET304L	1000	4	1006	1255
ACET304R				
ACET305L	1250	4	1256	1400
ACET305R				

Note: 1) To suit handle ACET165
2) The reverse espags shown above are taken from Alitherm 300

W20122

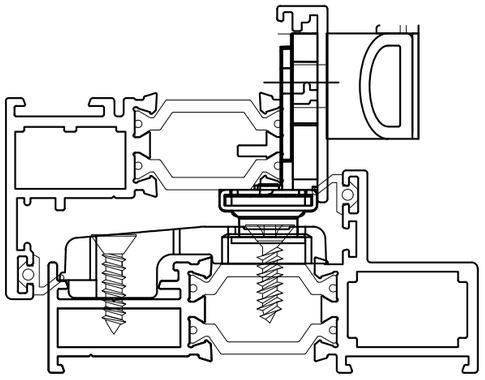

ACET165 Handle Prep

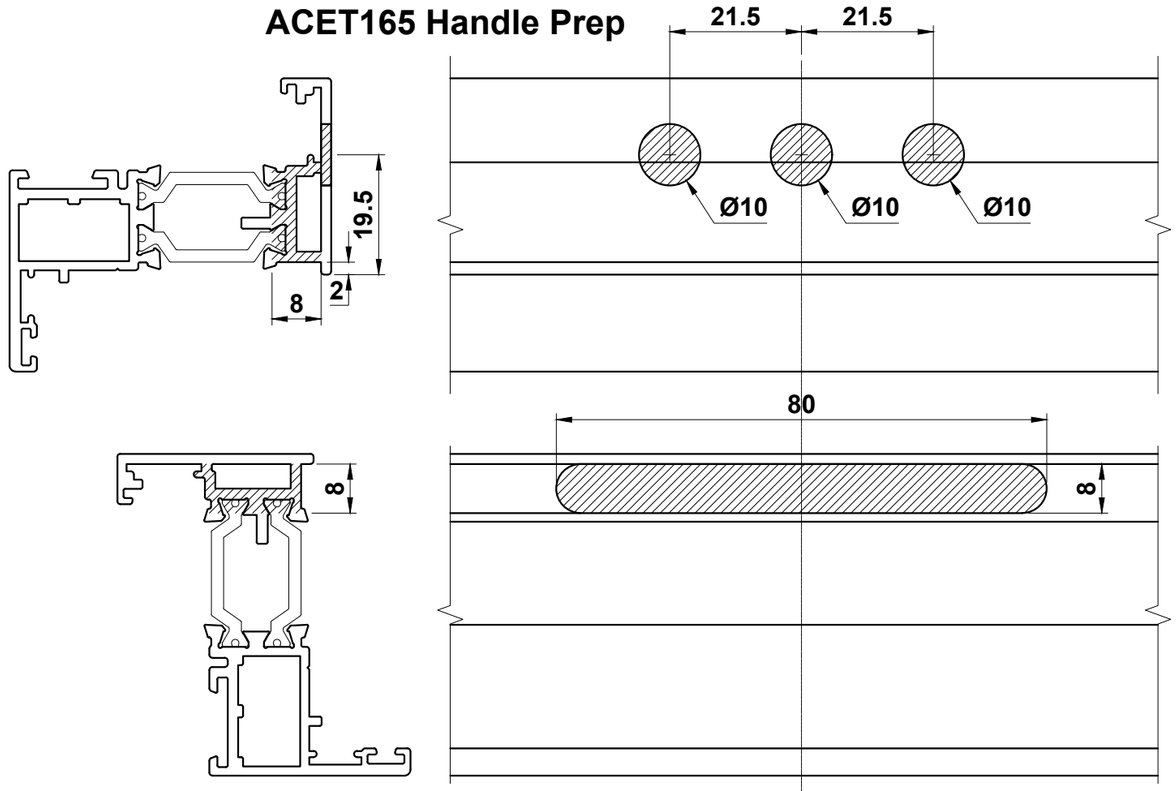

ACW20100 Monkey Tail & ACW20101 Bulb End Handle Prep

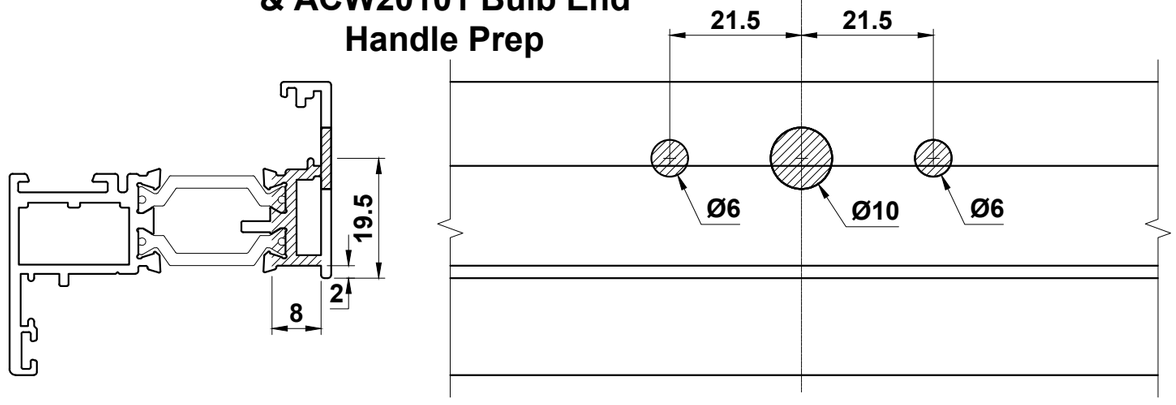

Do Not Scale From This Drawing

French Casement Assembly

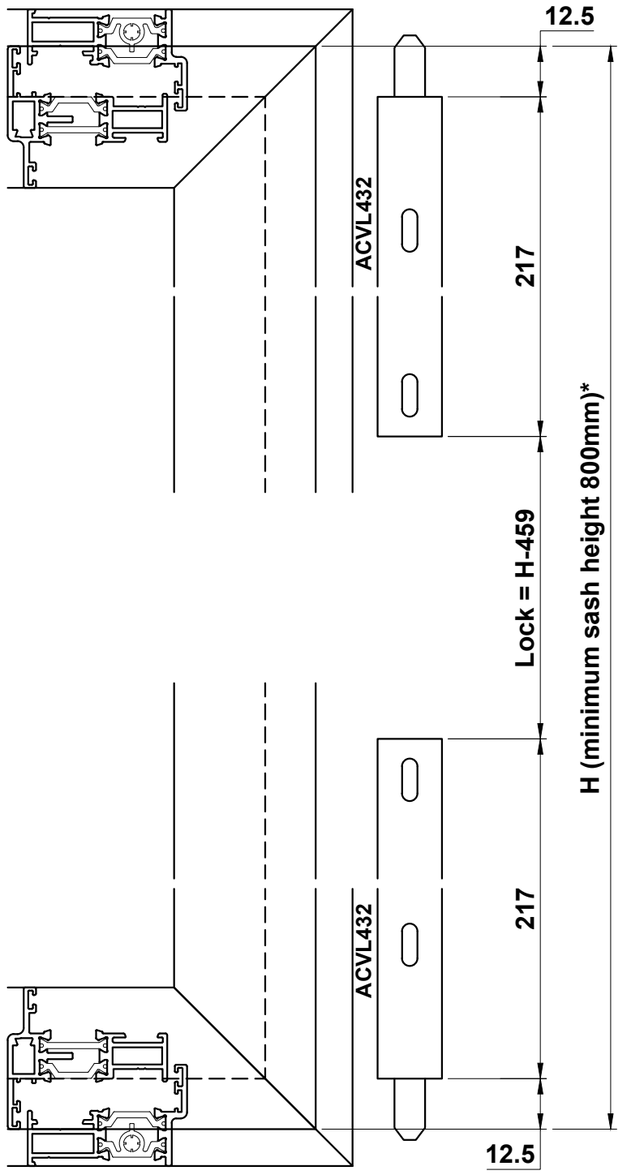

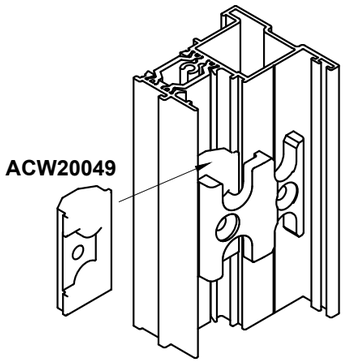

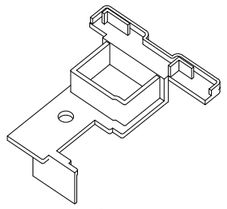

See page E27 for W20048 end prep.

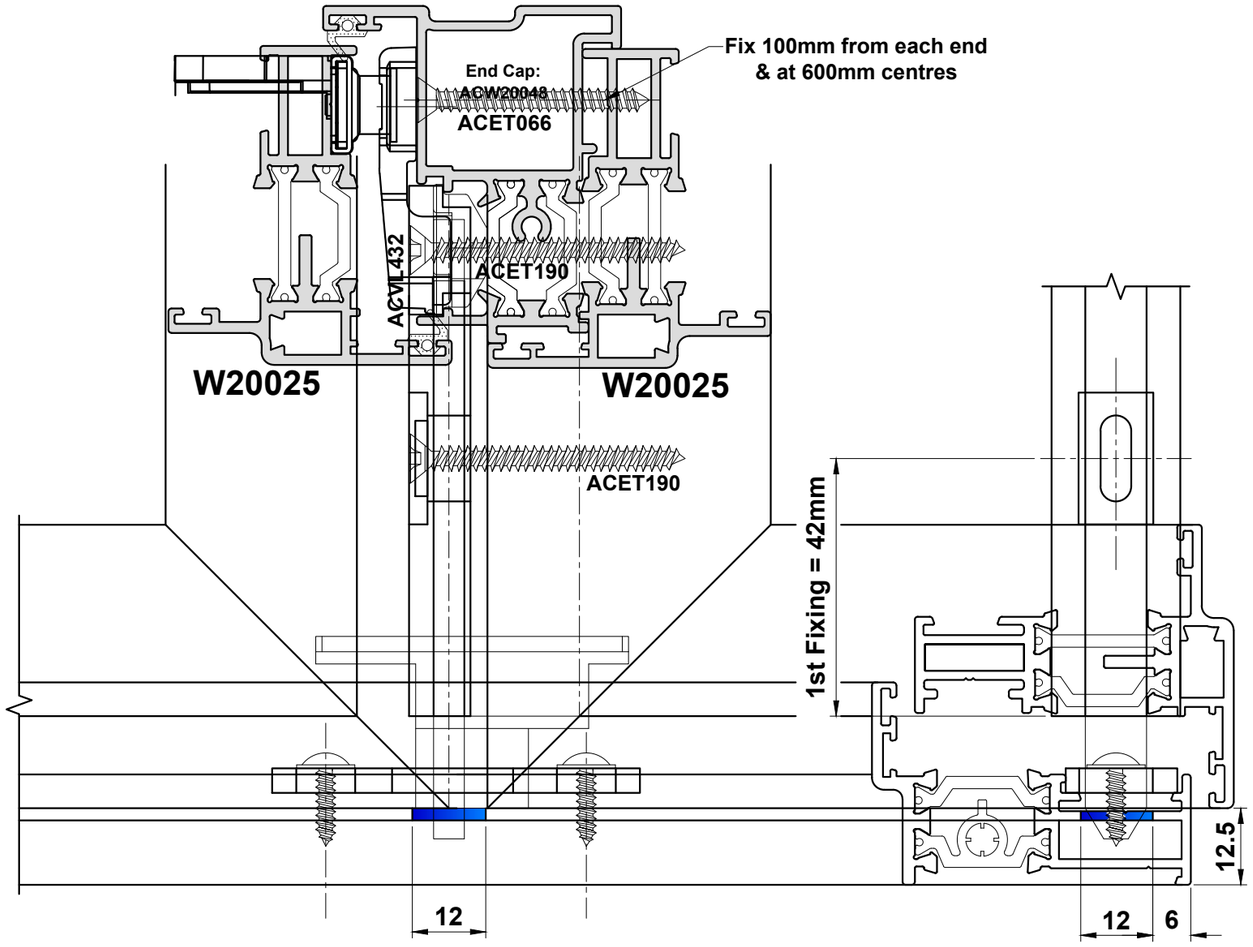

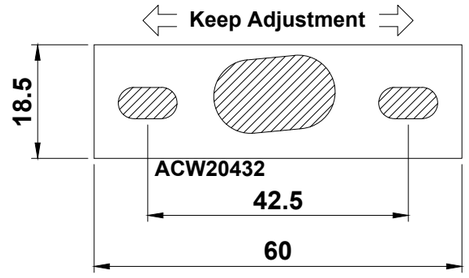

*Minimum sash height is based on using 335mm locking rod.

Do Not Scale From This Drawing

Peg Stay Fixing Details

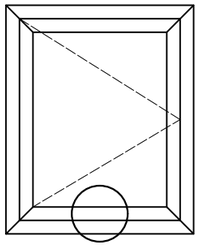

Monkey Tail Peg Stay

Bulb End Peg Stay

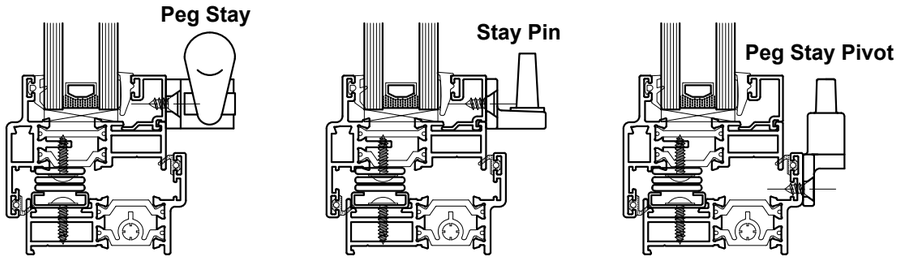

Typical layout for 10" peg stay

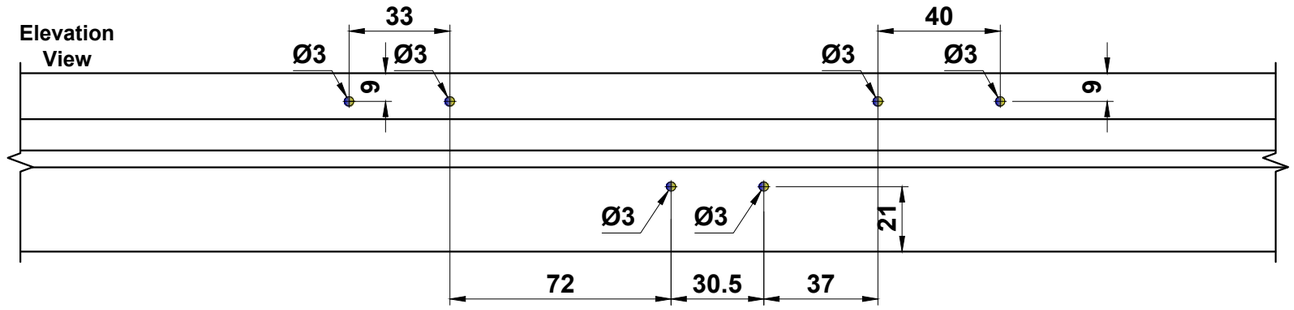

Please use the above dimensions for guidance only.
As each peg stay is hand made, the dimensions will vary slightly.

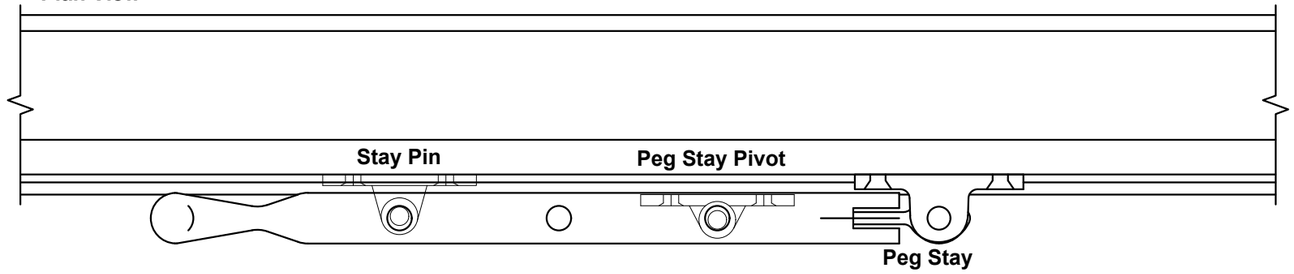

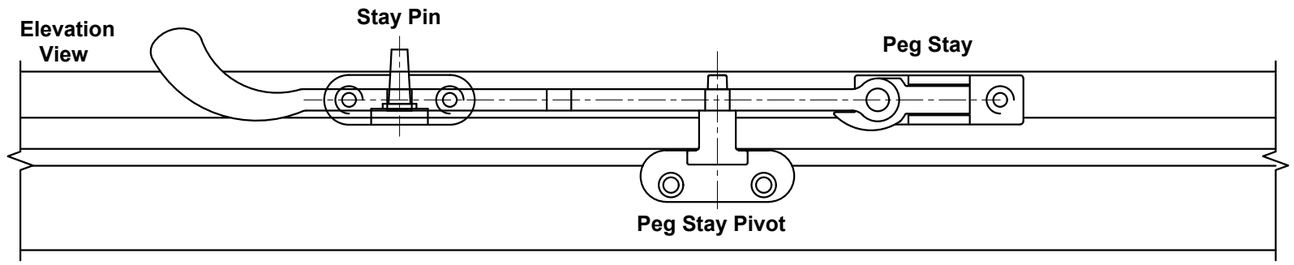

Do Not Scale From This Drawing

Tilt & Turn Overview

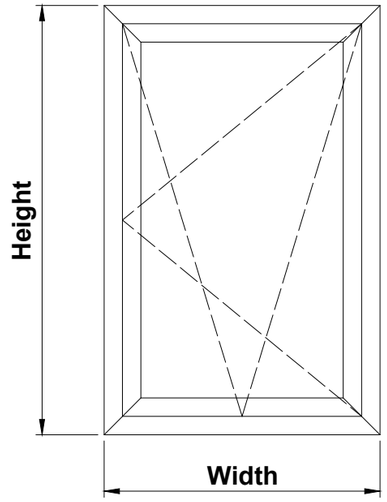

Important Notes:

1. **The size limitations of the chosen tilt & turn hardware must be adhered to**
2. **The width of the sash cannot be more than 1.5 times the height**
3. **Maximum sash weight = 90kg.**

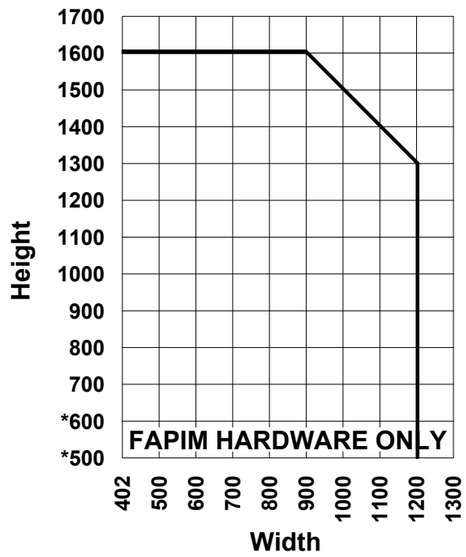

***Sashes below 600mm are not compatible with Sobinco Chrono hardware. Fapim hardware must be selected.**

***Due to the narrow outer frame, we recommend using the Chrono Invision tilt & turn gear to avoid issue with the internal render. Alternatively, an extension section maybe used as shown.**
Please see the SB Chrono manual or the Fapim manual for full gearing details

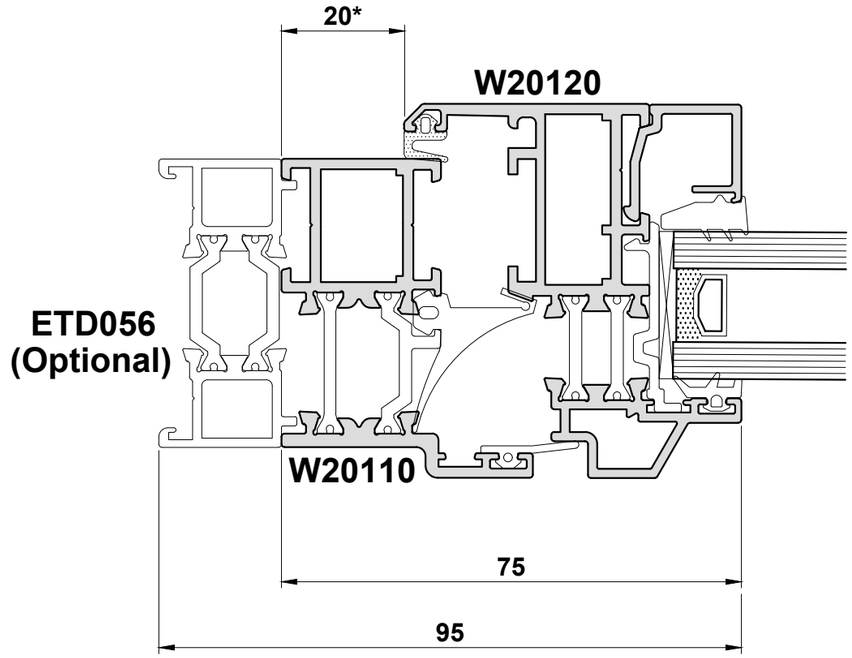

Do Not Scale From This Drawing

Tilt & Turn Drainage

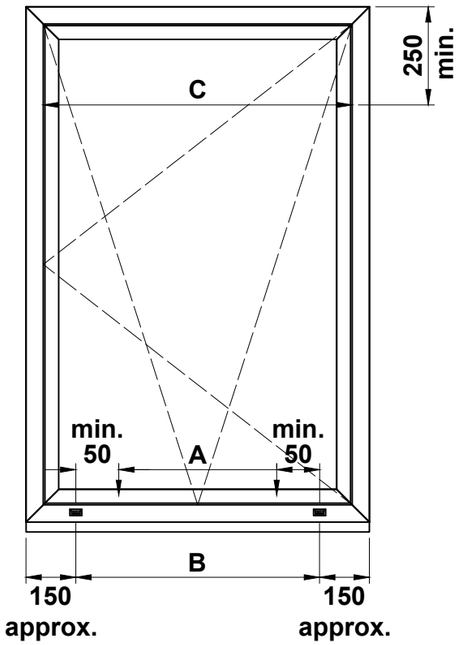

A: Vent Drainage = 2 x Ø8

B1: Outer Frame Drainage = 2 x 5 × 30

B2: Outer Frame Drainage = 2 x Ø8

C: Sash Ventilation Holes = 2 x Ø8

Important Note: All exposed aluminium should be coated using ACSIL014 or painted to match the frame.

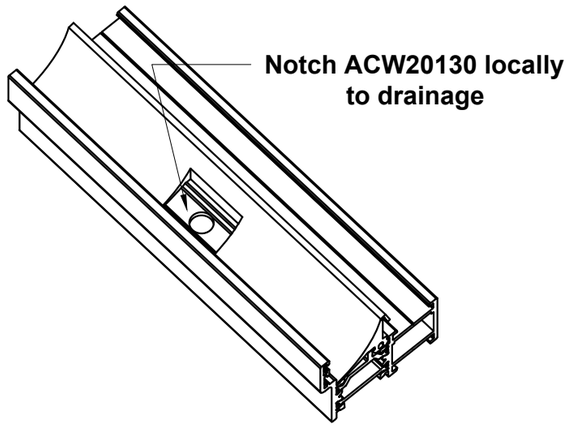

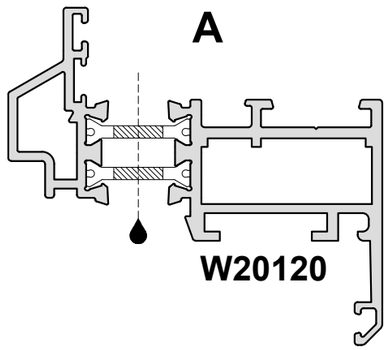

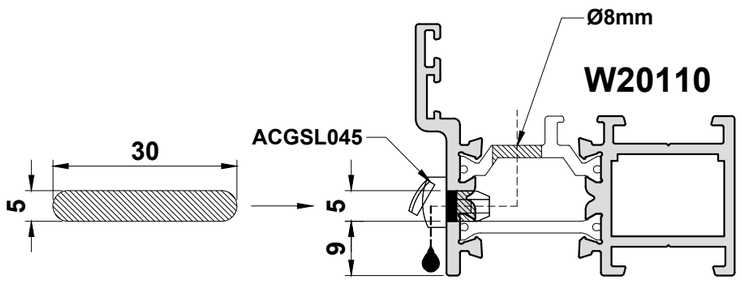

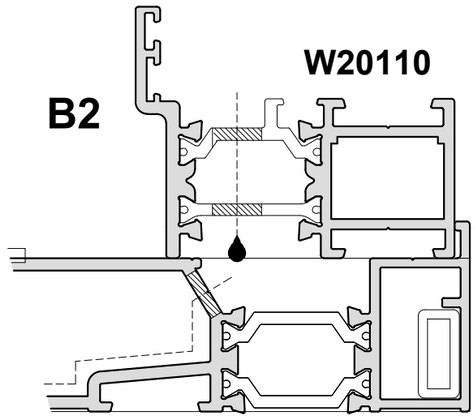

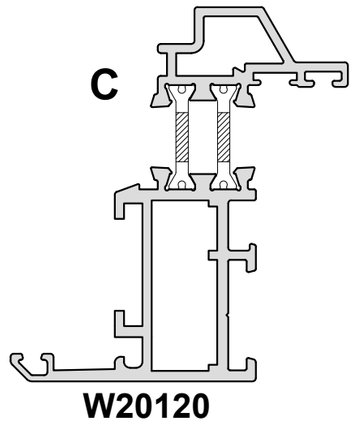

Do Not Scale From This Drawing

Tilt & Turn Outer Frame & Sash

Outer Frame Gasket

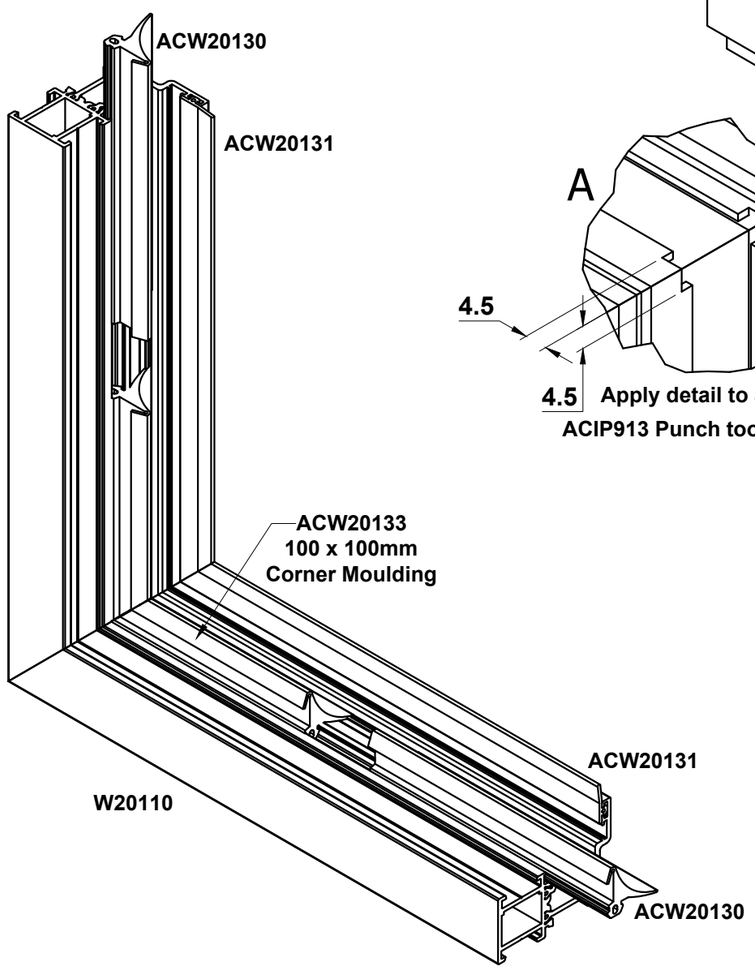

Sash Corner Preparation
(must be prepped prior to assembly)
ACIP913 Punch tool may be used

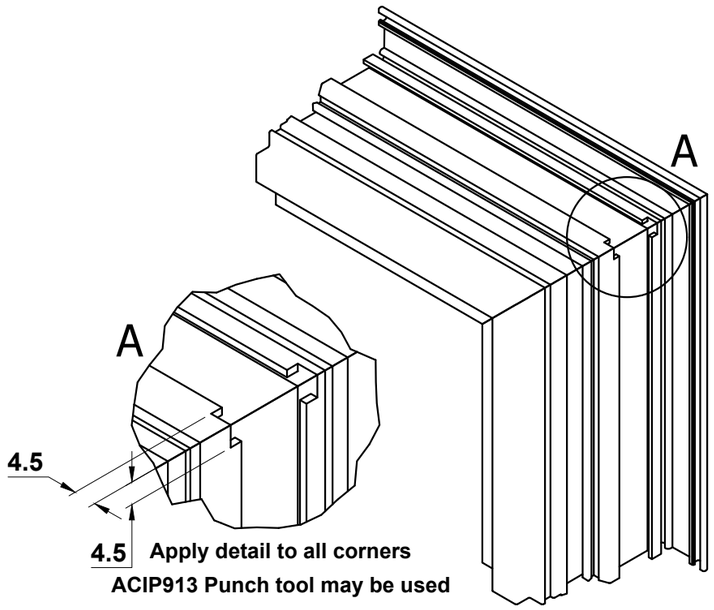

Apply detail to all corners
ACIP913 Punch tool may be used

Handle Preparation
(must be prepped prior to assembly)
ACIP913 Punch tool may be used

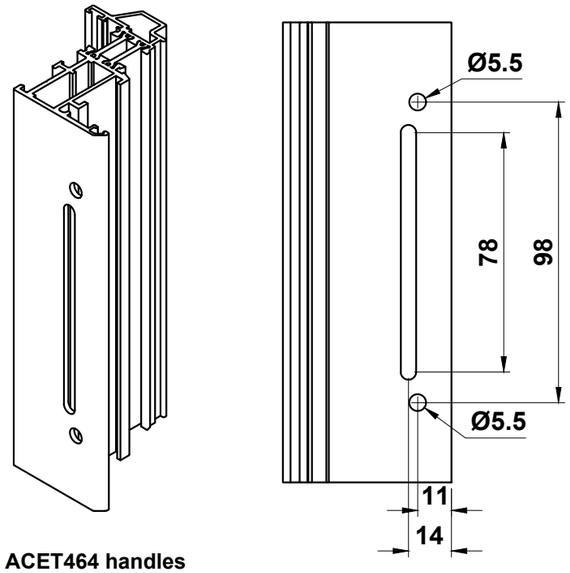

Preperation for ACET463 & ACET464 handles
Requires adaptors:
Fapim: ACFA212
SB Chrono: ACSZ905

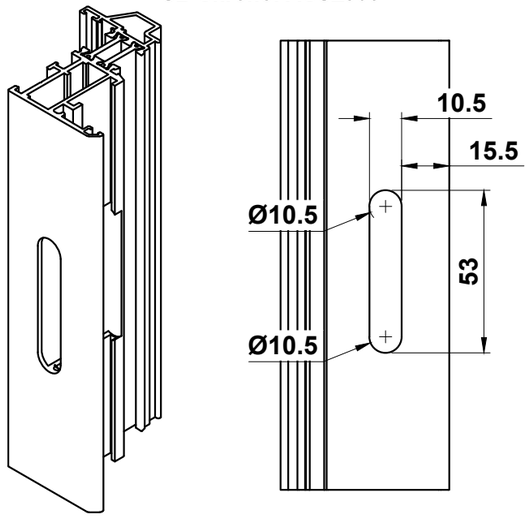

Tilt & Turn Transom/Mullion

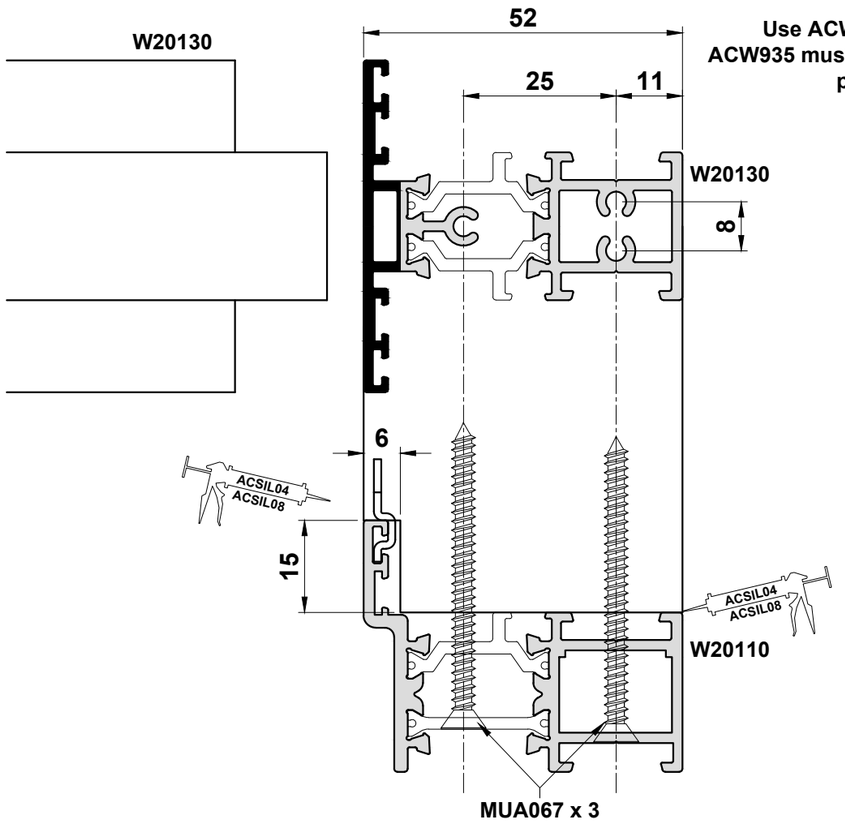

Use ACW935 for accuracy.
ACW935 must be clamped in position prior to use.

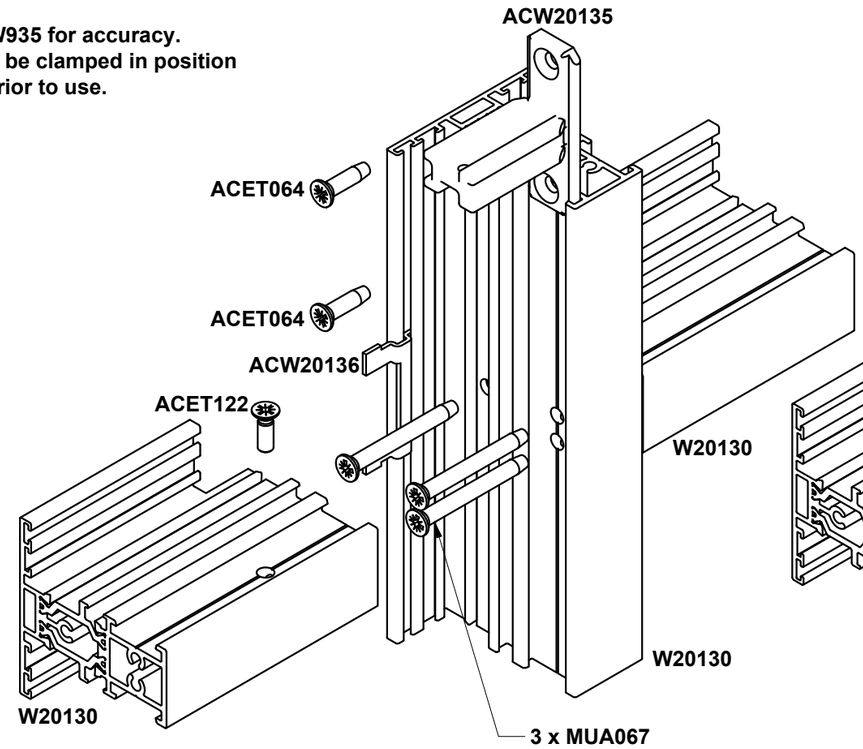

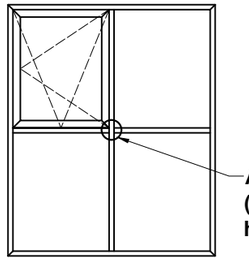

ACW20135
(Cannot be used on hinge side of tilt & turn)

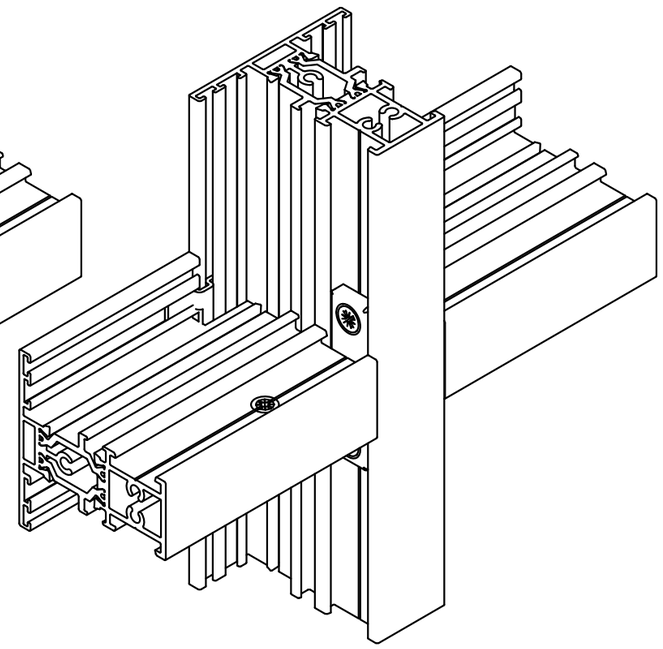

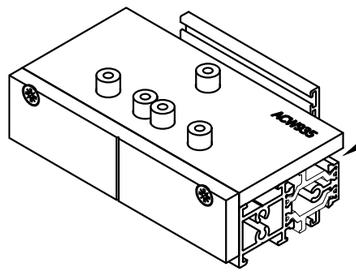

Clamp ACW935 drill jig flush to end of W20130 to drill for ACW20135 cruciform bracket

Do Not Scale From This Drawing

Open Out Door Lock Preparation

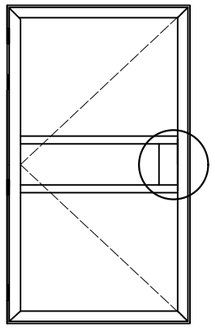

Drill Jig = ACW925

Jig MUST be clamped in position before drilling

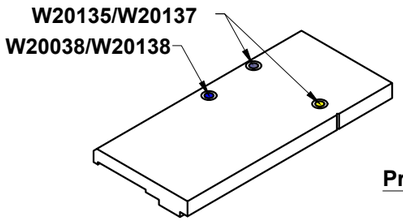

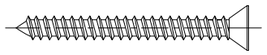

Use ACET066 screw to secure transoms/mullions

LEFT HAND SHOWN

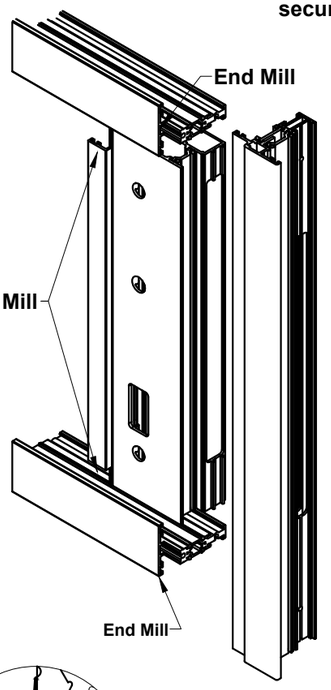

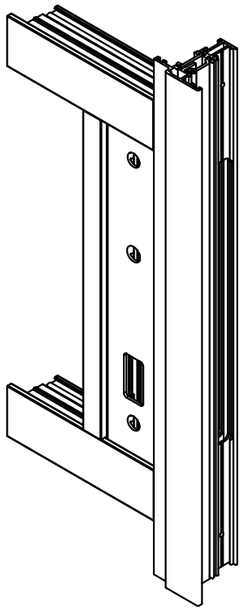

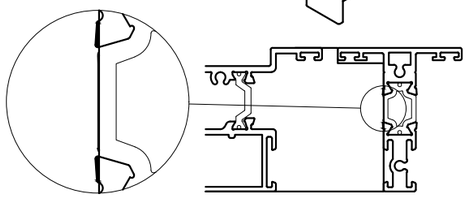

Note: Where W20038 fits against W20037, the anvils holding the polyamide strips may need to be routed flat for a good fit.

Jamb Preparation

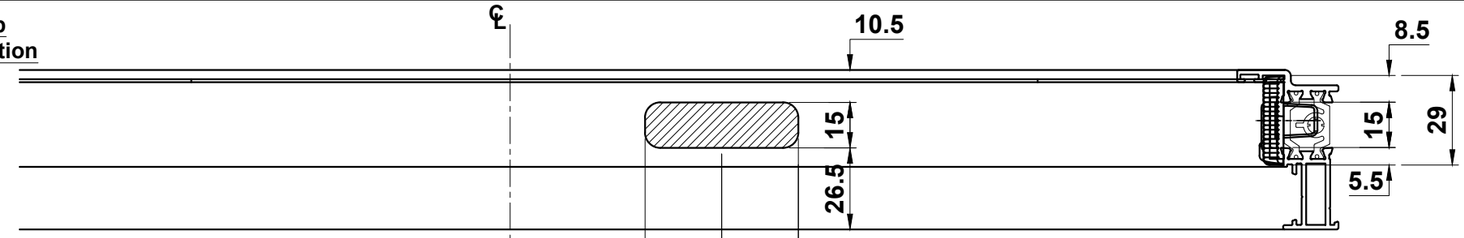

Stile Preparation

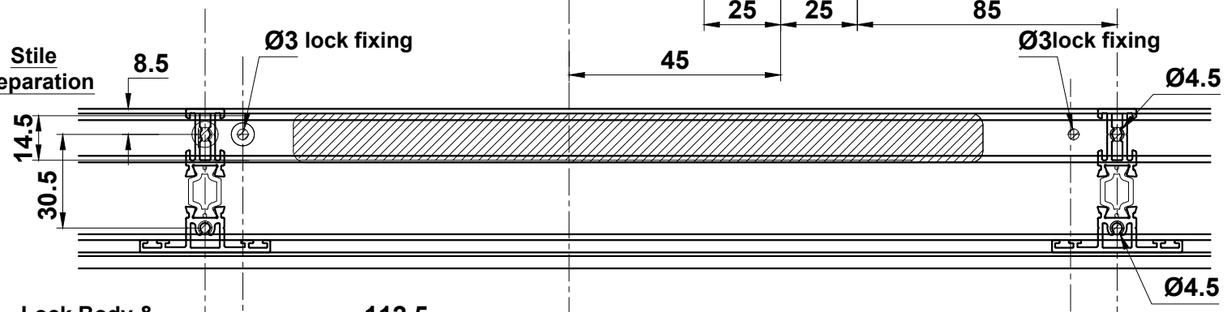

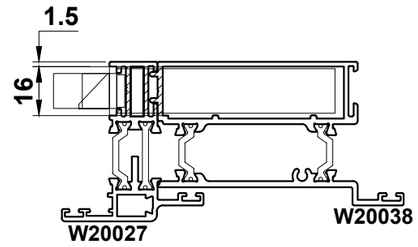

Lock Body & Stile Prep

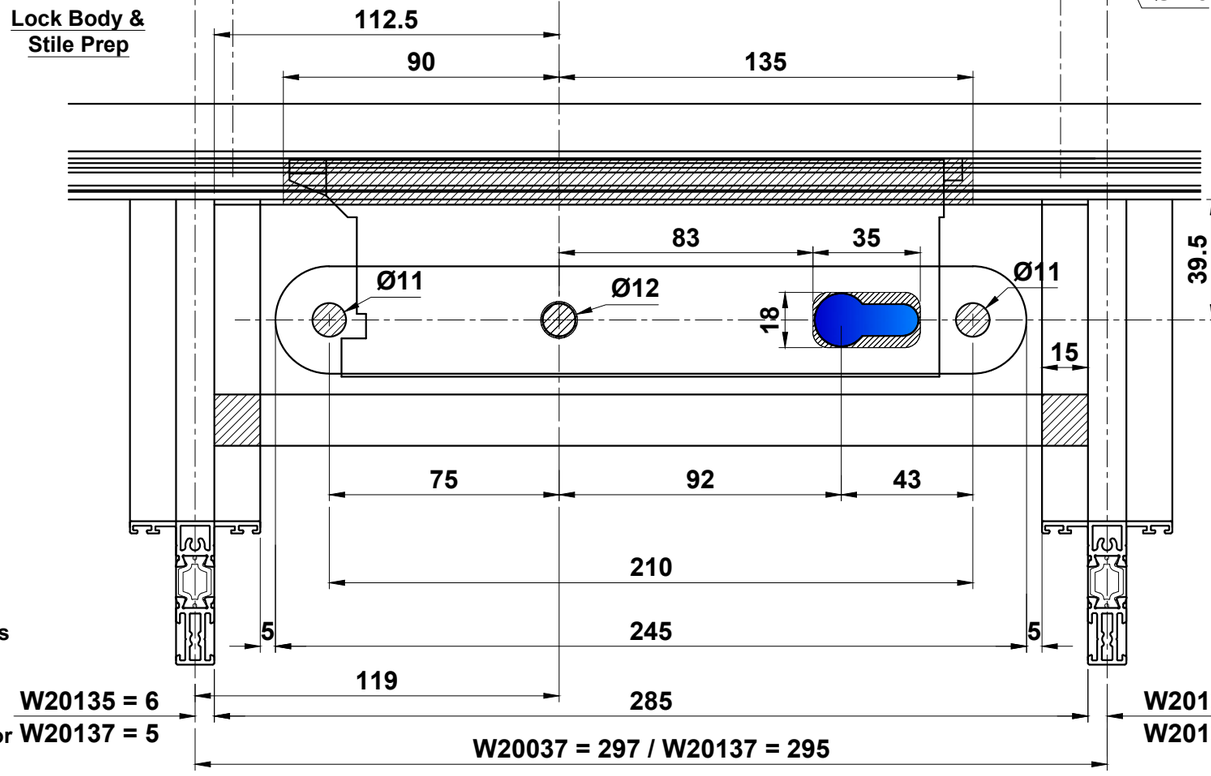

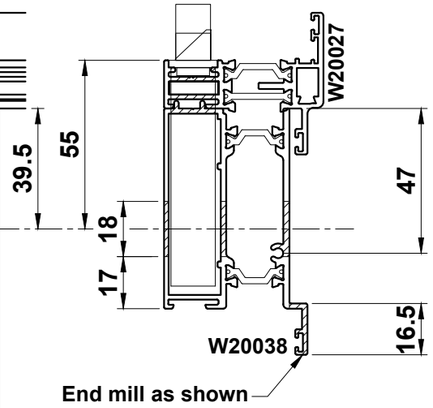

Please Note:
ACW20138 is a pre-prepped version of W20038. See section B for details

Open Out Door Lock Preparation Continued

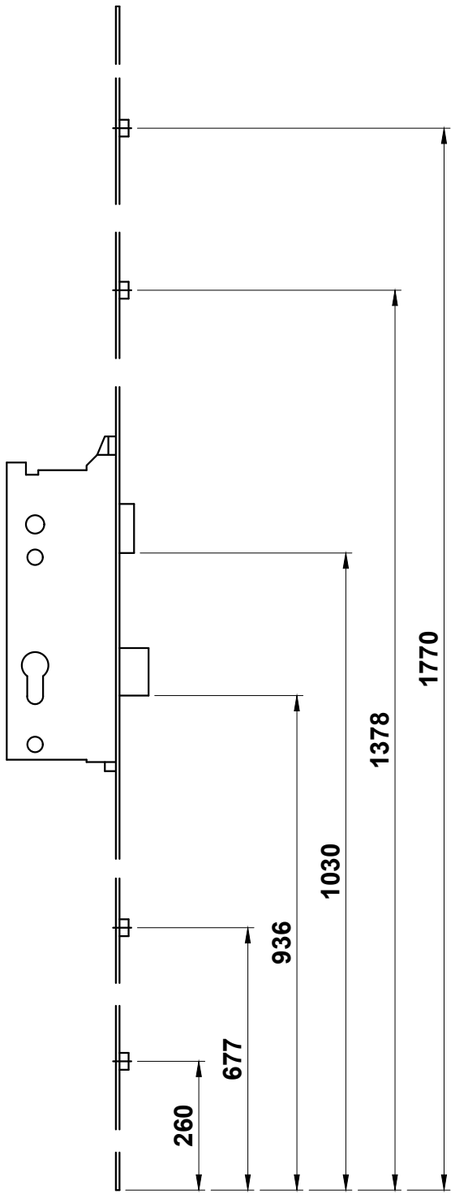

Locking Positions (in unlocked position)

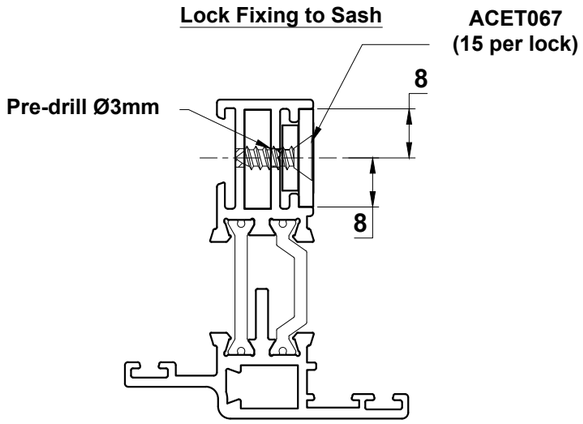

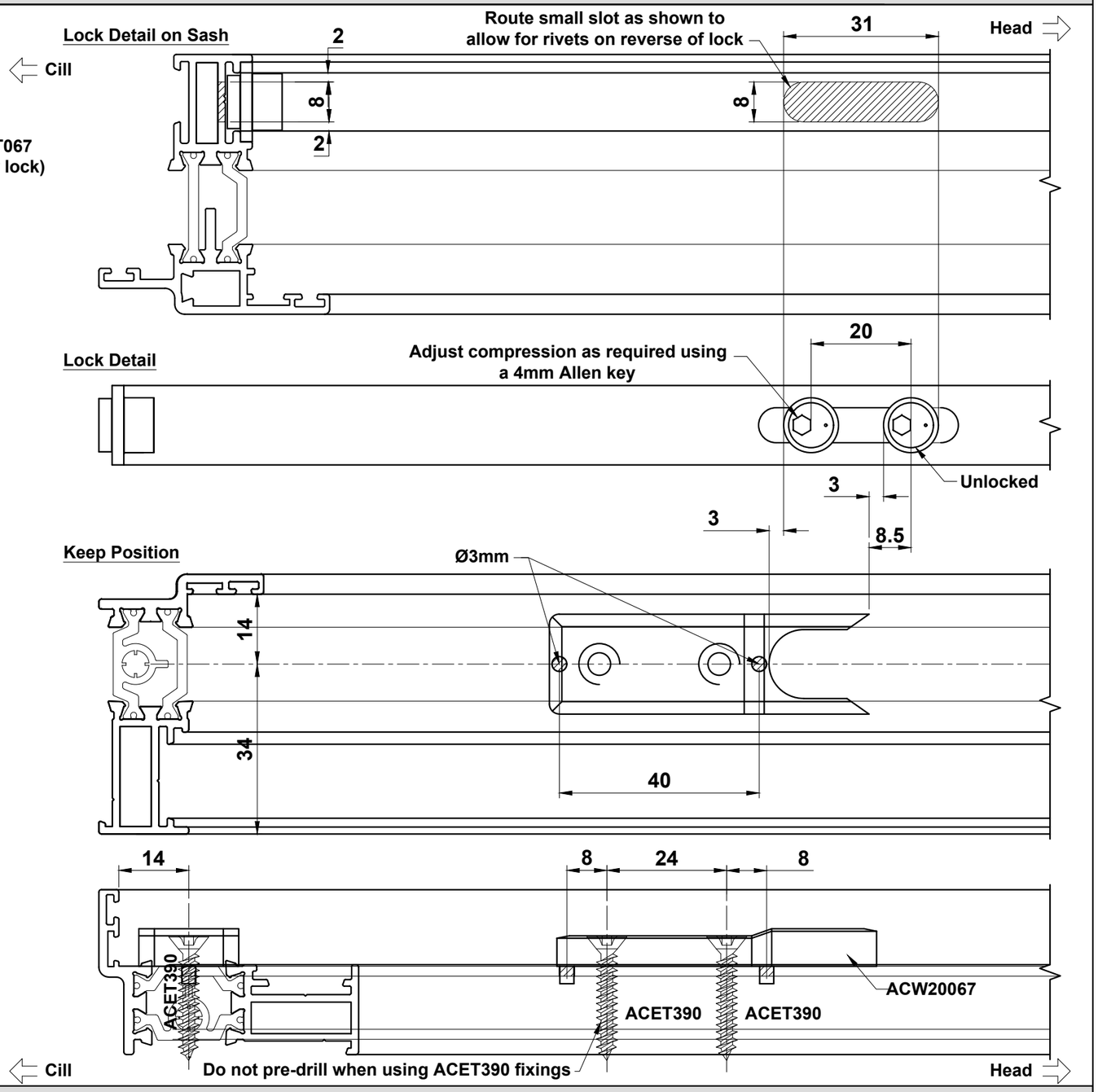

Open Out Double Door

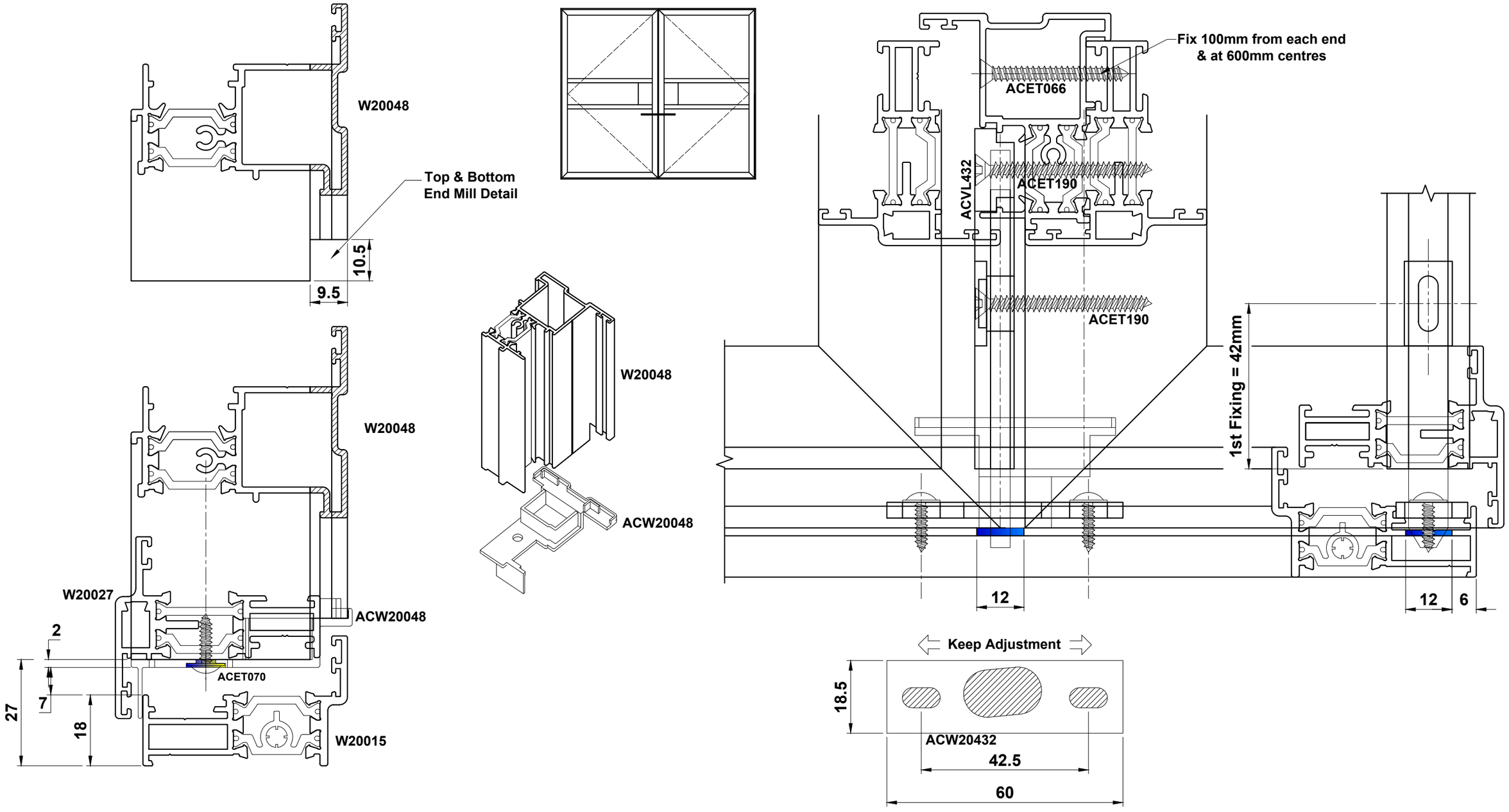

Do Not Scale From This Drawing

Open Out Door Hinge Details

Recommended hinge positions

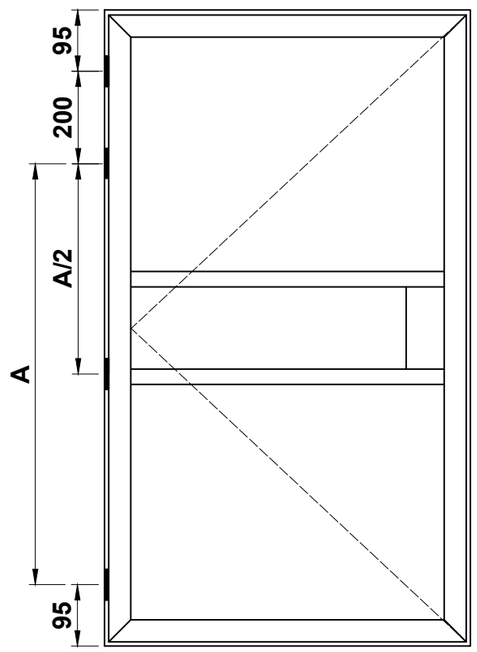

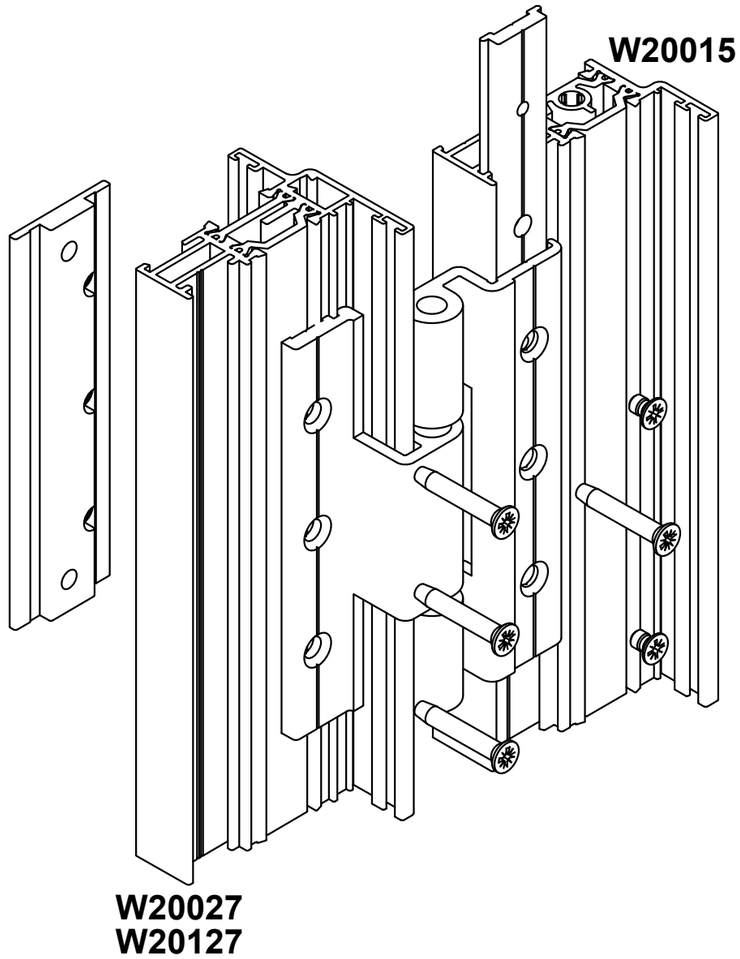

Assembly Instructions

1. Slide Hinge Backplates into outerframe prior to crimping.

2. Locate each hinge and clamp in position using 2No. M4 x 6mm Countersunk screws - supplied with ACW20060.

3. Use the hinge to mark the hole positions in the sash and drill Ø7mm. Fasten Hinge through the Sash to the backplate with 3No. M4 x 20mm Countersunk Screws - supplied with ACW20060. The backplate may be secured in position using ACET490 screws.

4. Once the sash requires no further adjustment, fix the outerframe half of the hinge with the No.8 x 16mm Pozi Csk Self Tapping screw supplied

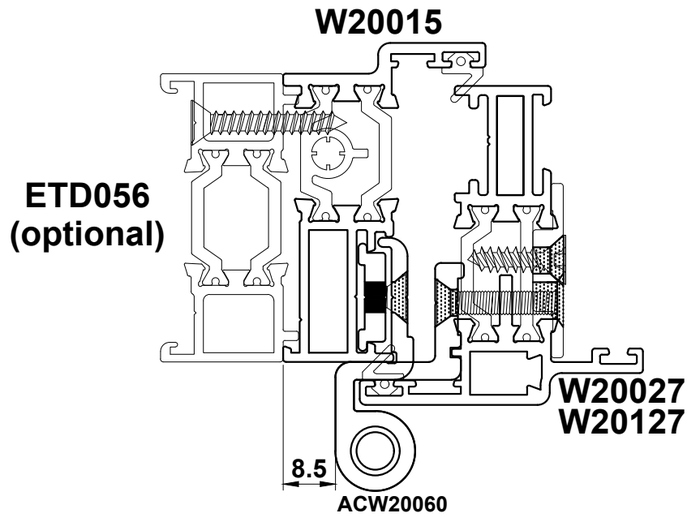

Do Not Scale From This Drawing

Open In Door Lock Preparation

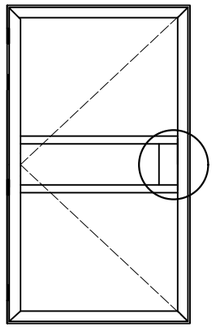

Drill Jig = ACW925

Jig MUST be clamped in position before drilling

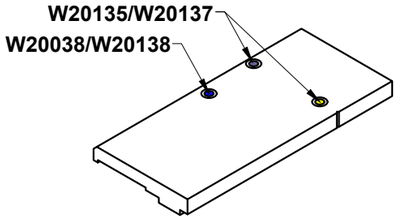

Use ACET066 screw to secure transoms/mullions

LEFT HAND SHOWN

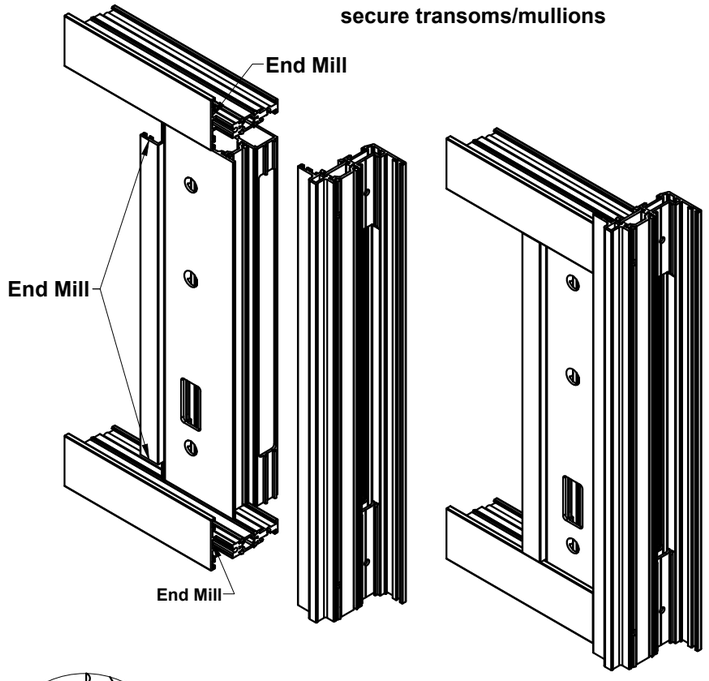

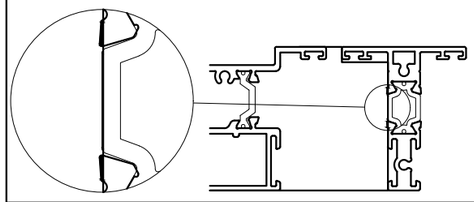

Note: Where W20038 fits against W20037, the anvils holding the polyamide strips may need to be routed flat for a good fit.

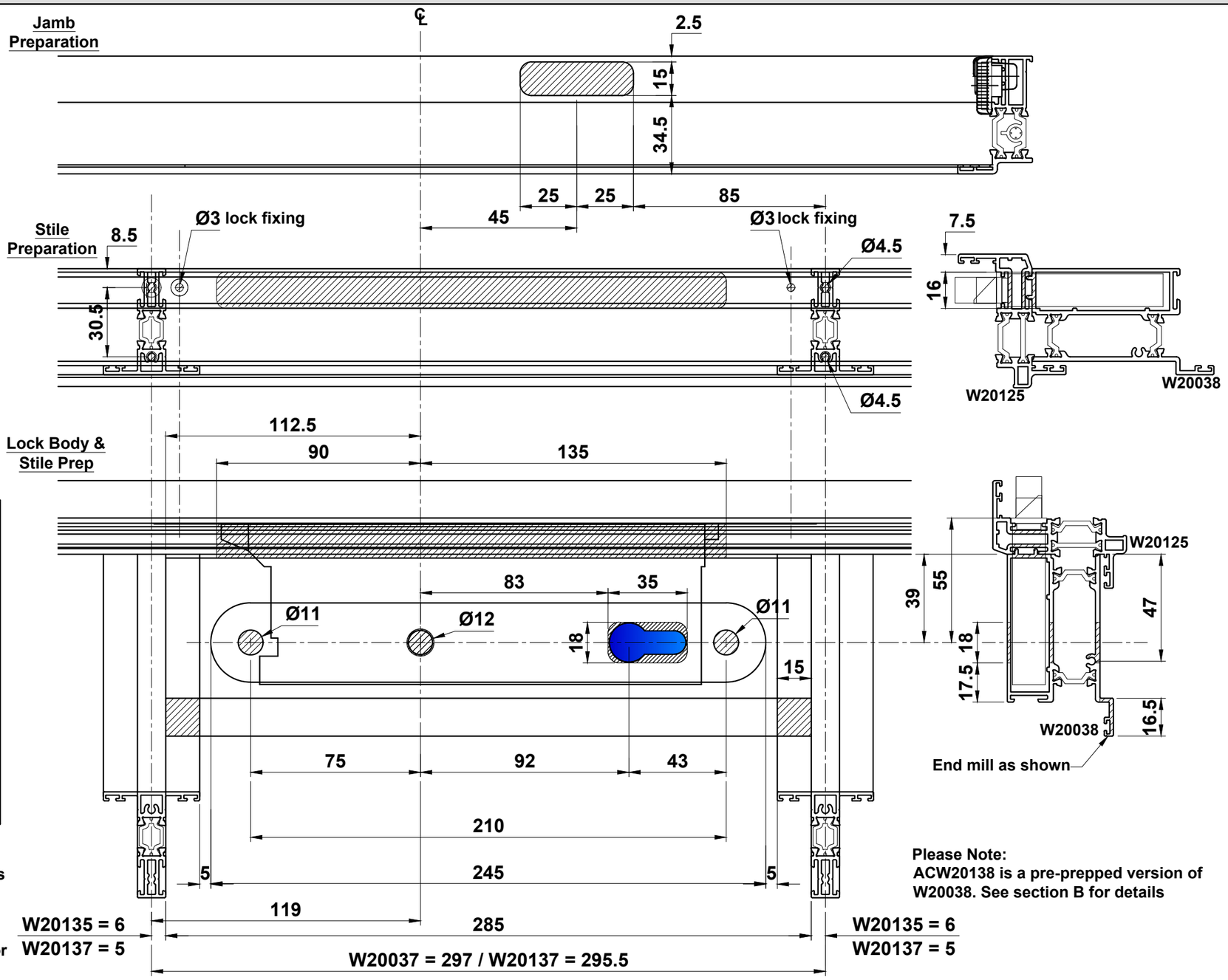

Please Note:
ACW20138 is a pre-prepped version of W20038. See section B for details

Do Not Scale From This Drawing

Open In Door Lock Preparation Continued

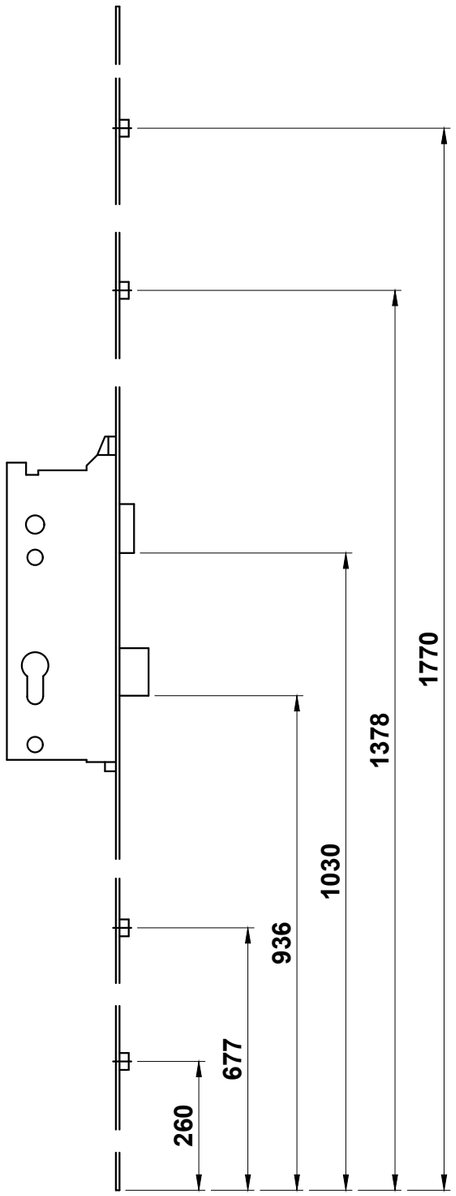

Locking Positions (in unlocked position)

Lock Fixing to Sash

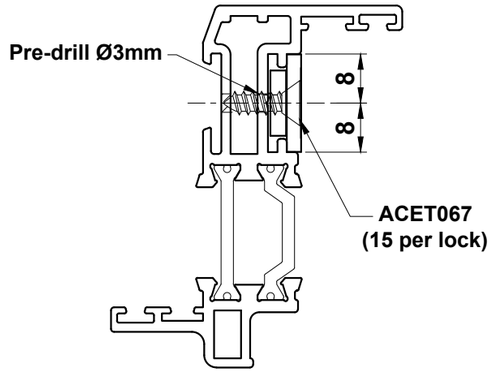

Lock Detail on Sash

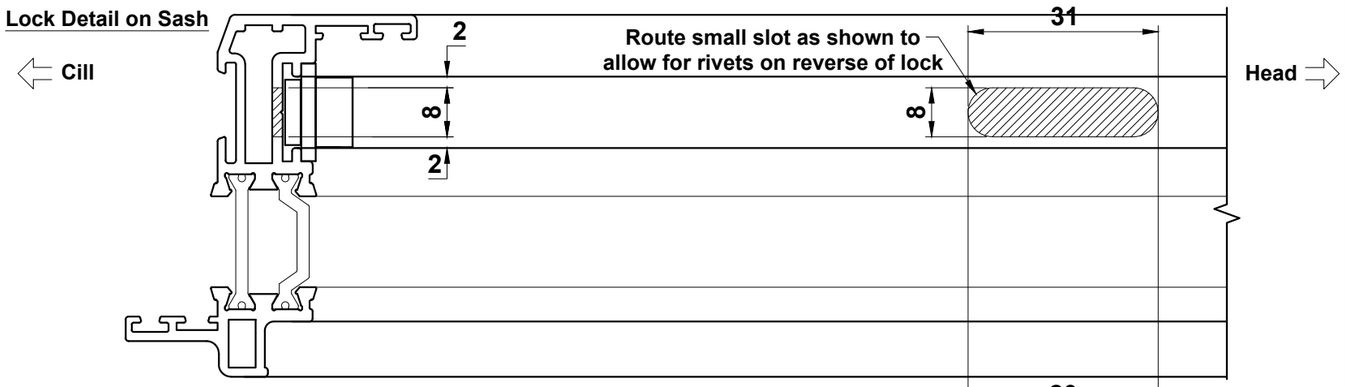

Lock Detail

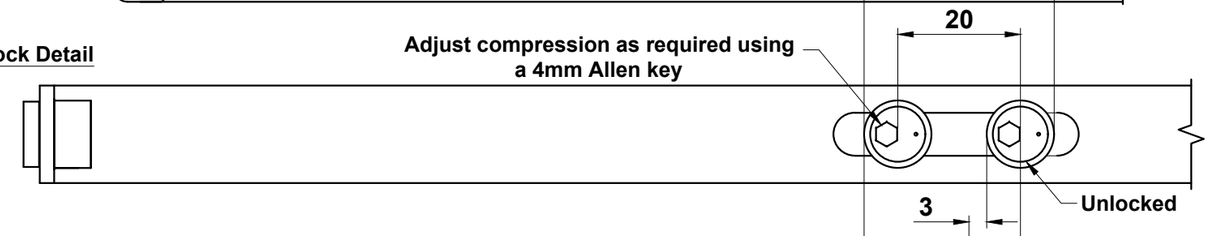

Keep Position

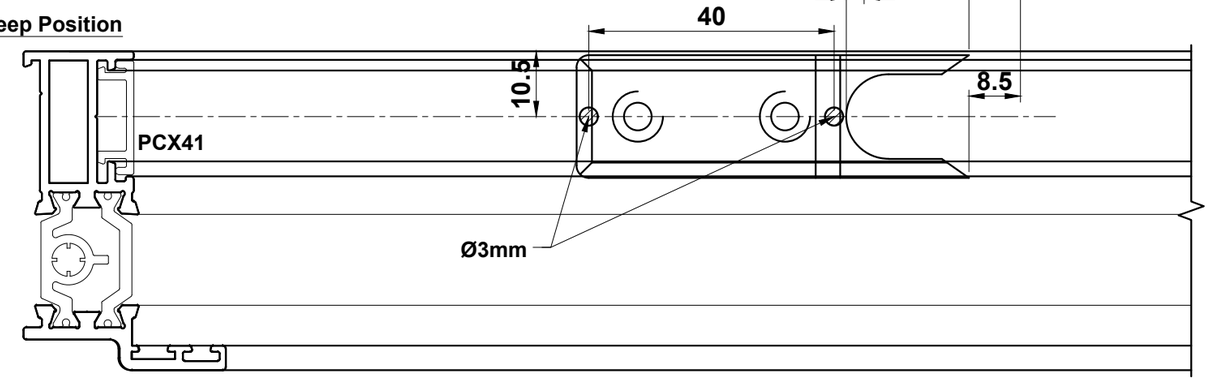

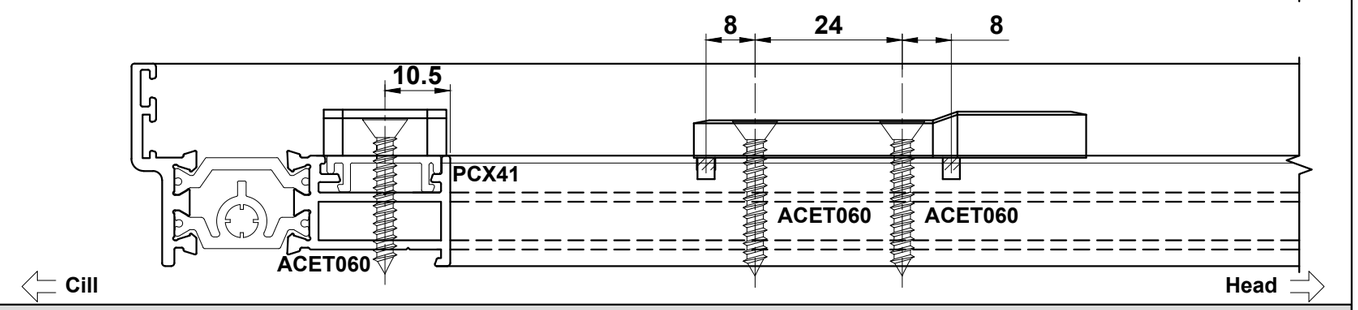

Do Not Scale From This Drawing

Open In Double Door Using W20148

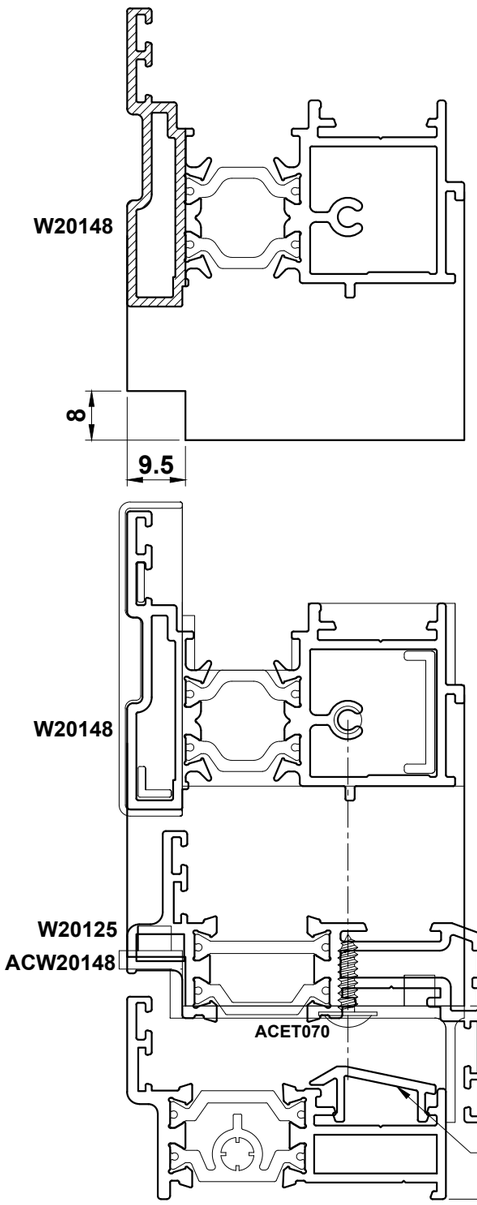

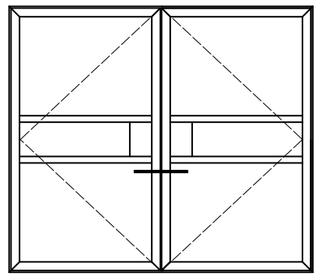

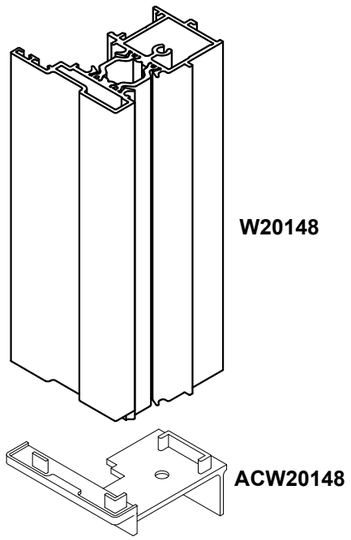

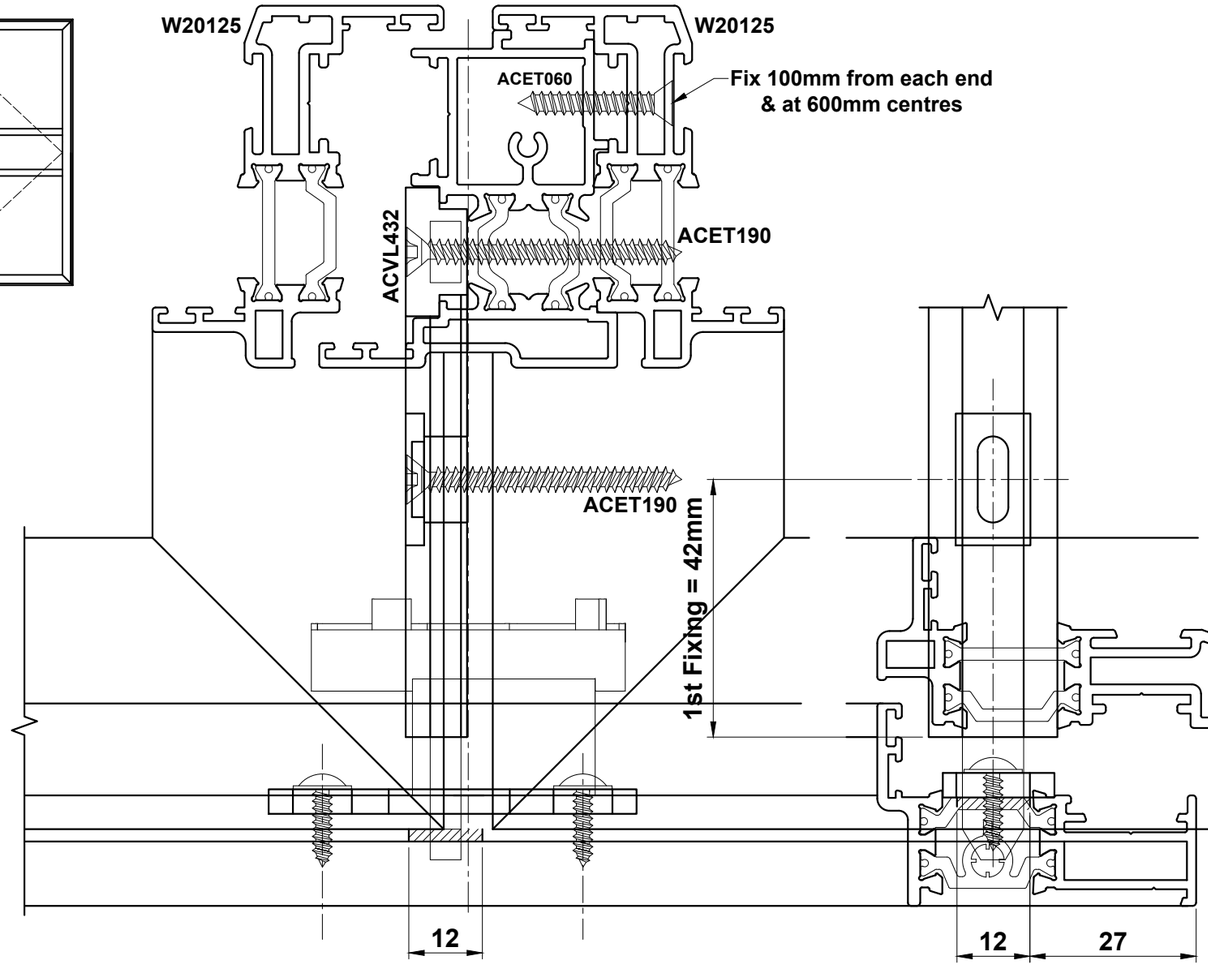

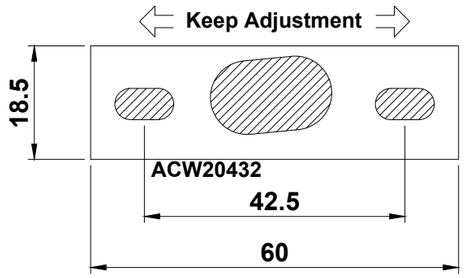

Open In Double Door W20175 Detail

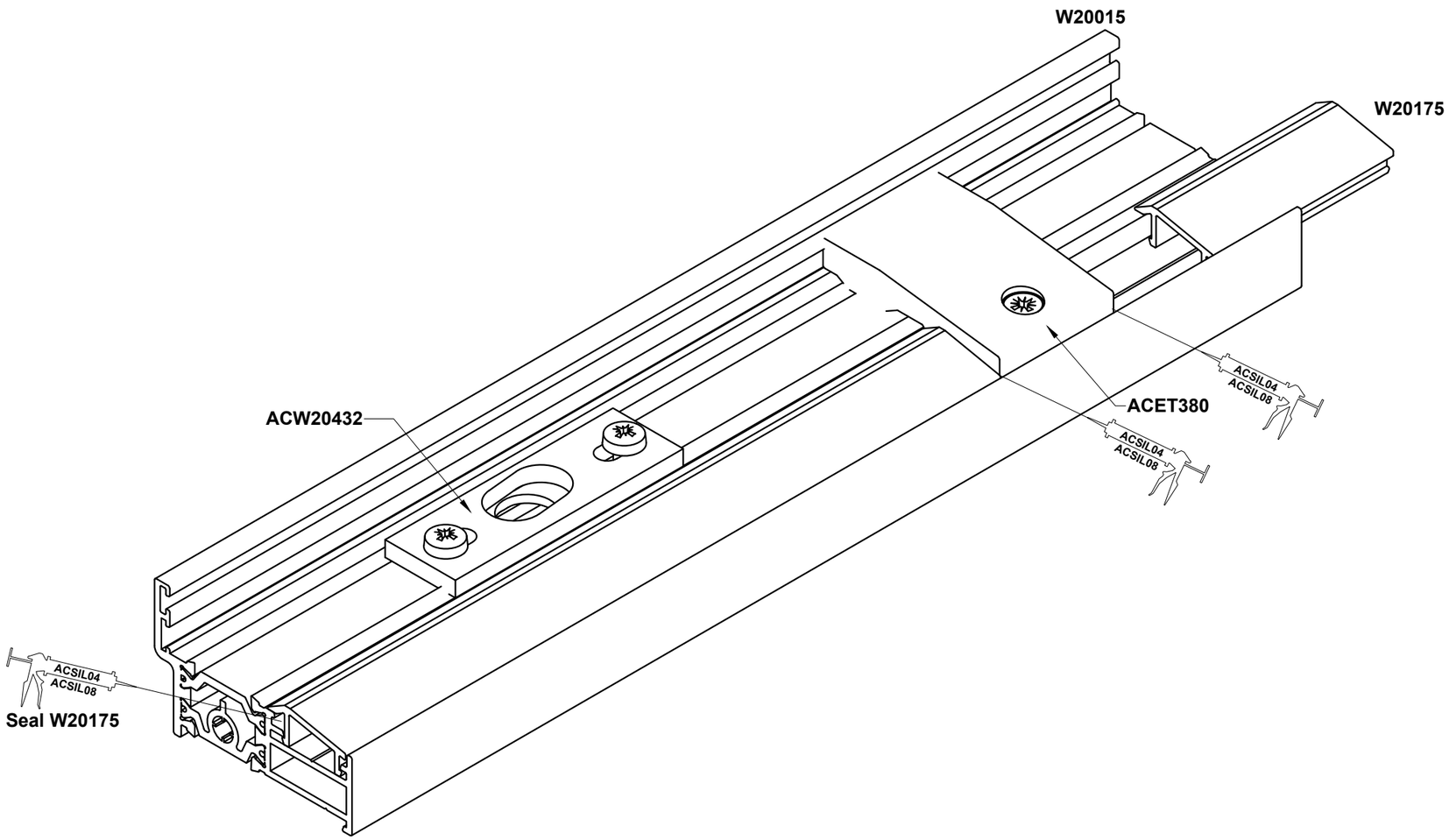

Do Not Scale From This Drawing

Open In Door Hinge Details

Recommended hinge positions

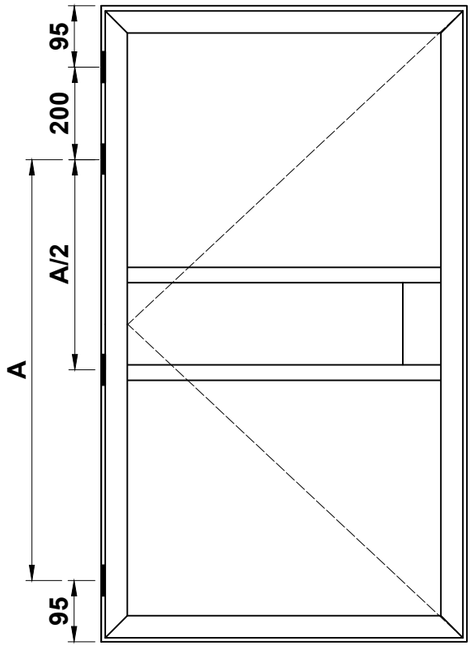

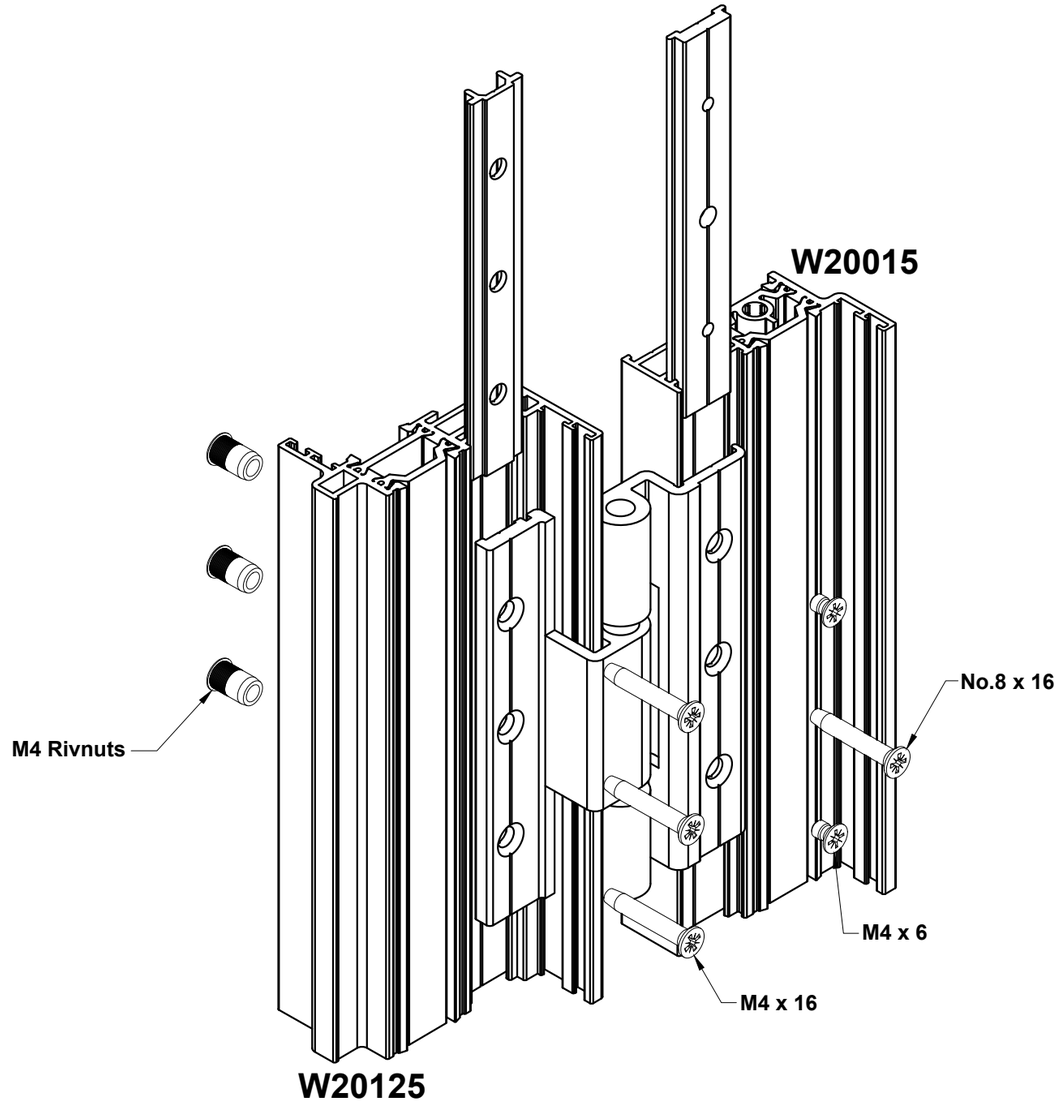

Assembly Instructions

1. Slide Hinge Backplates into outerframe prior to crimping.

2. Locate each hinge in outerframe and clamp in position using 2No. M4 x 6mm Countersunk screws - supplied with ACW20164.

3. Fasten Hinge to Sash through the adaptor with 3No. M4 x 16mm Screws into the rivnuts - supplied with ACW20164

4. Once the sash requires no further adjustment fix the outerframe half of the hinge with 1 x No.8 x 16mm Pozi Csk Self Tapping screw.

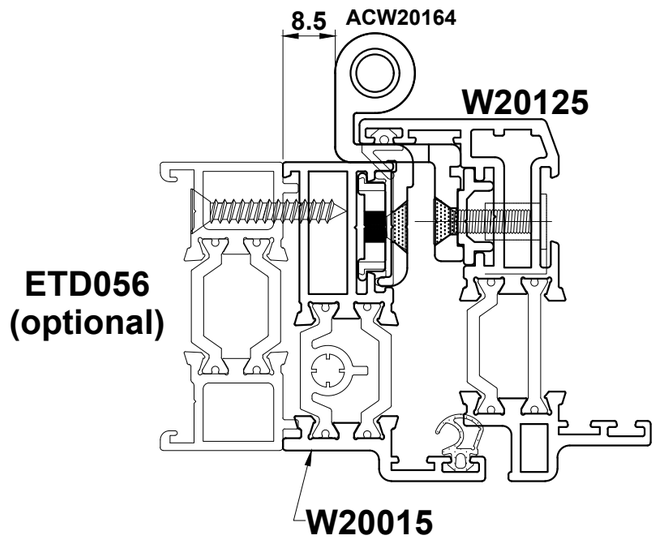

Do Not Scale From This Drawing

Glazing Chart

24mm Glazing

Gasket Glazed

ETC370 or ETC364

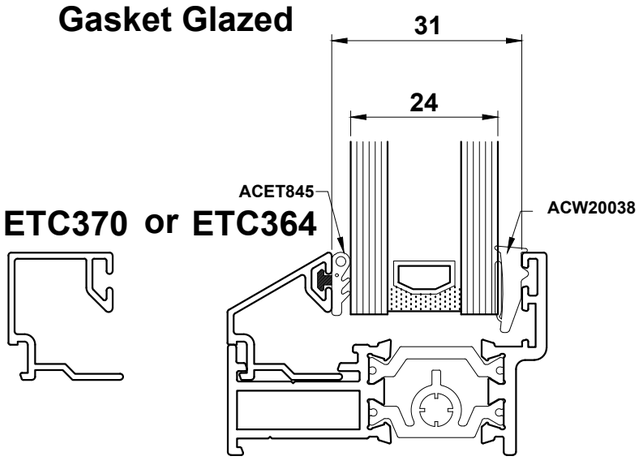

W20015 W20034
W20016 W20035
W20017

ETC381 or ETC378

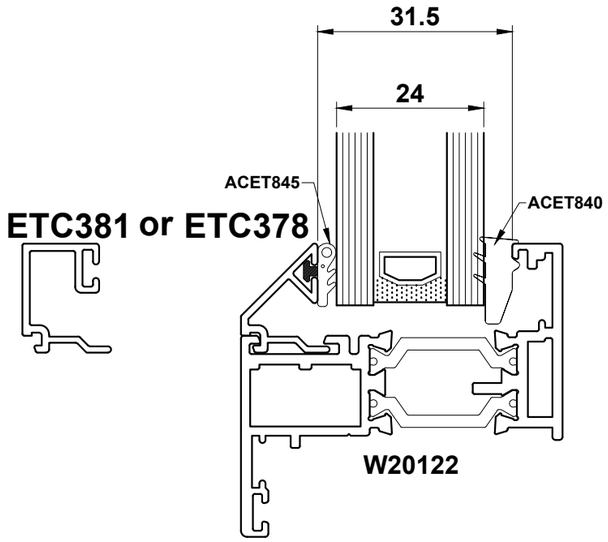

W20122

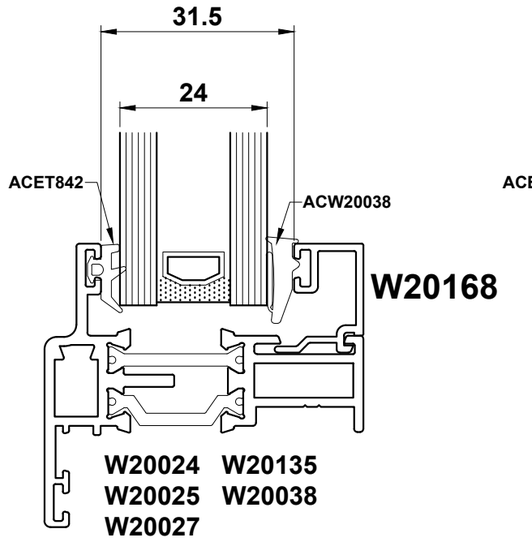

W20168

W20024 W20135
W20025 W20038
W20027

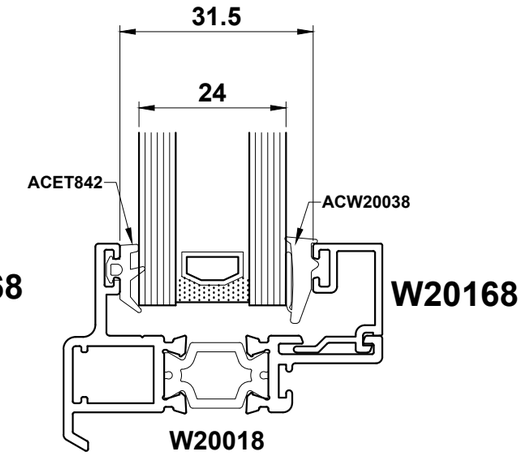

W20168

W20018
W20047
W20037
W20125

24mm Glazing

Tape Glazed

Important Notes:

- Glazing tape must be coated with silicone after installation
- Tape glazing is only available for the sections shown to the right

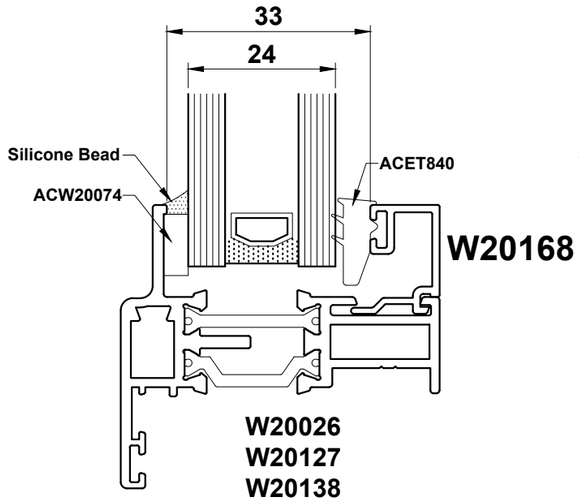

W20168

W20026
W20127
W20138

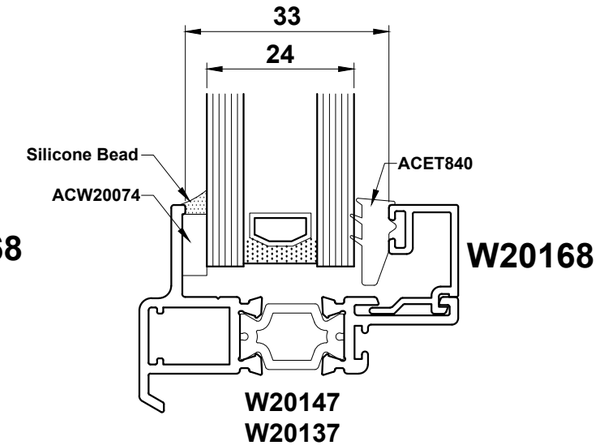

W20168

W20147
W20137

We recommend the use of Black Spacer Bar in the sealed units

Do Not Scale From This Drawing

Glazing Chart

28mm Glazing

Gasket Glazed

ETC375 or ETC371

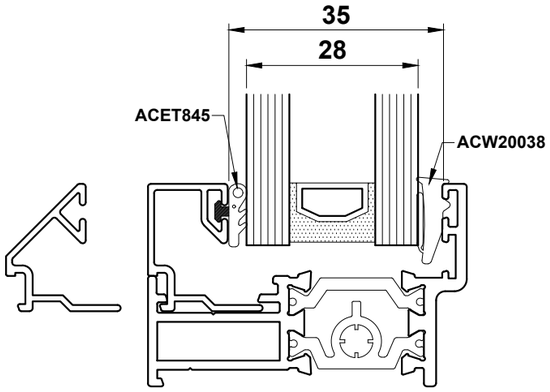

W20015 W20034
W20016 W20035
W20017

W20170

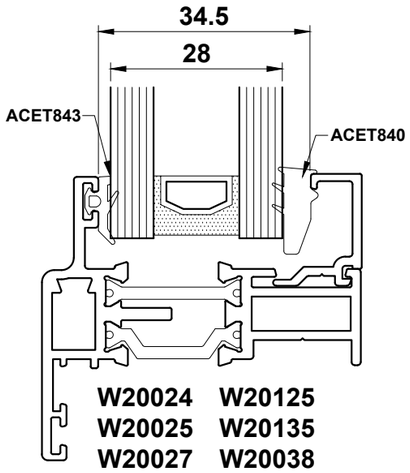

W20024 W20125
W20025 W20135
W20027 W20038

W20168

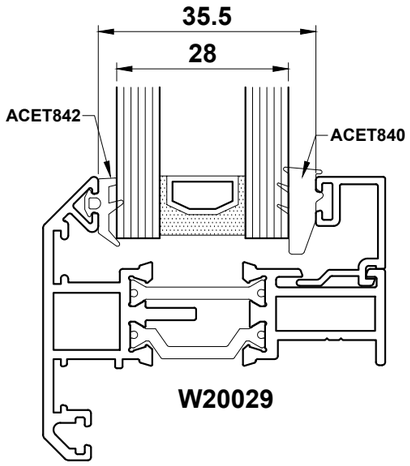

W20029

W20170

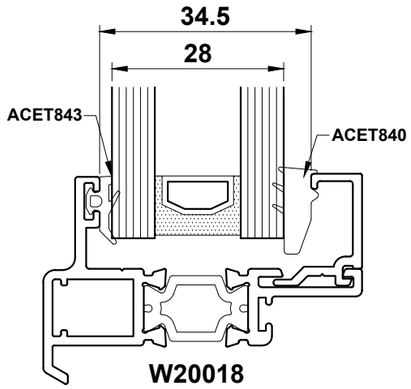

W20018
W20047
W20037

W20174

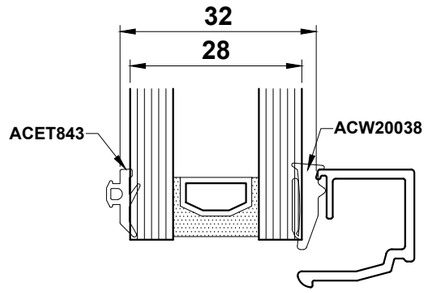

W20120
W20110

ETC366

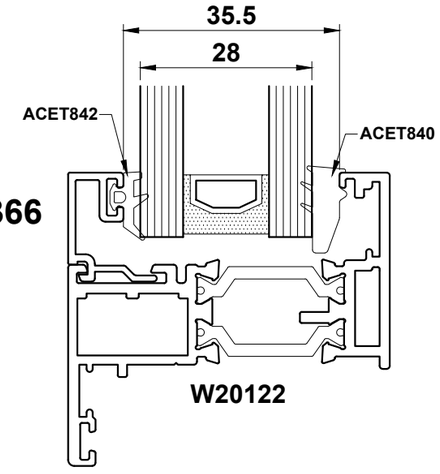

W20122

28mm Glazing

Tape Glazed

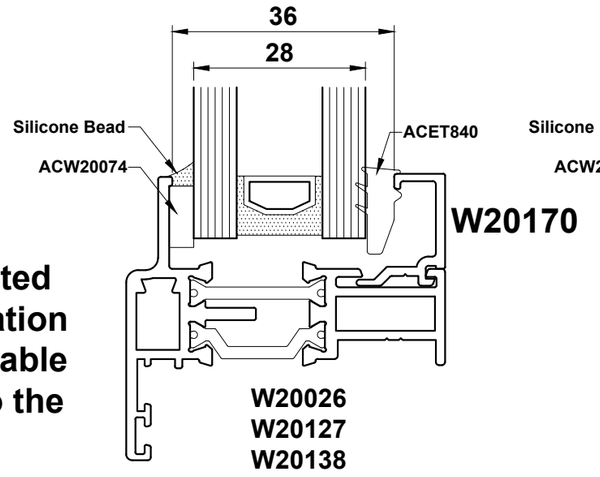

W20170

W20026
W20127
W20138

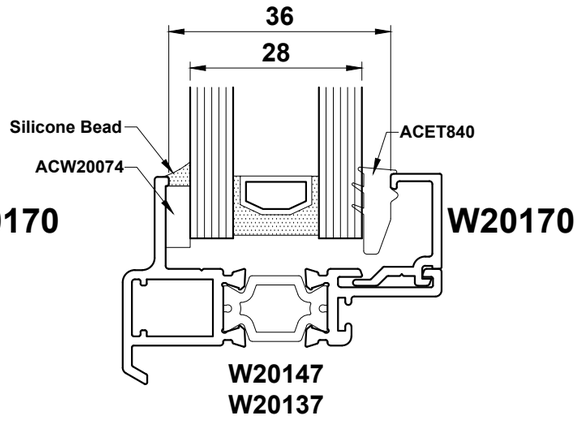

W20170

W20147
W20137

Important Notes:

- Glazing tape must be coated with silicone after installation
- Tape glazing is only available for the sections shown to the right

Glazing Chart

32mm Glazing

Gasket Glazed

Important Note: 32mm & 36mm glazing is compatible with the below sections only.

ETC379 or ETC377

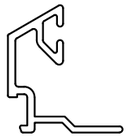

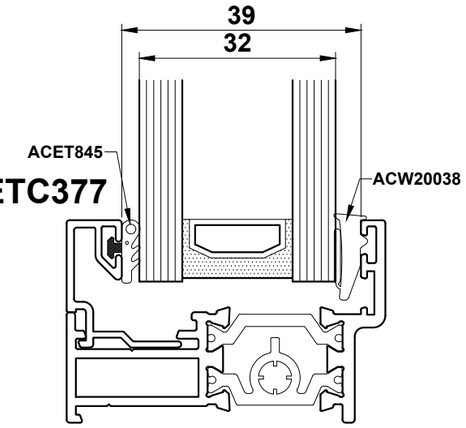

W20015
W20016
W20035
W20017

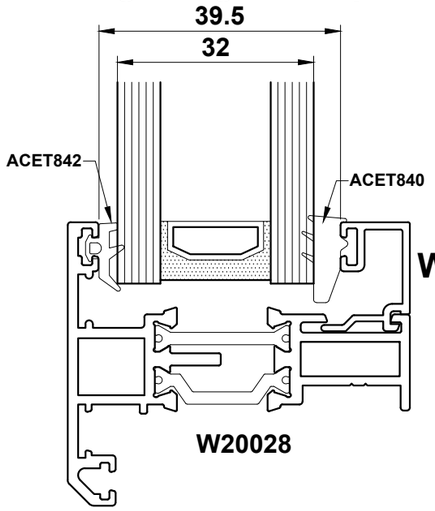

W20168

W20028

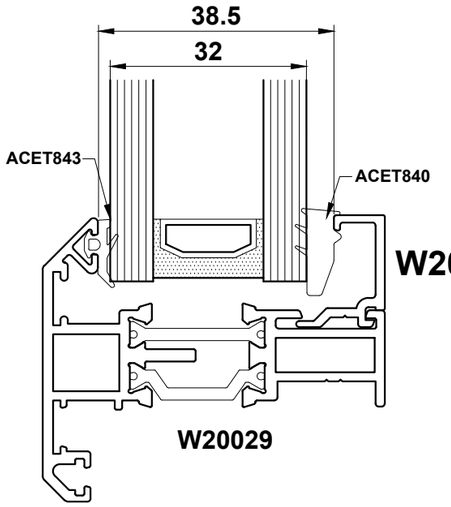

W20170

W20029

36mm Glazing

Gasket Glazed

ETC376

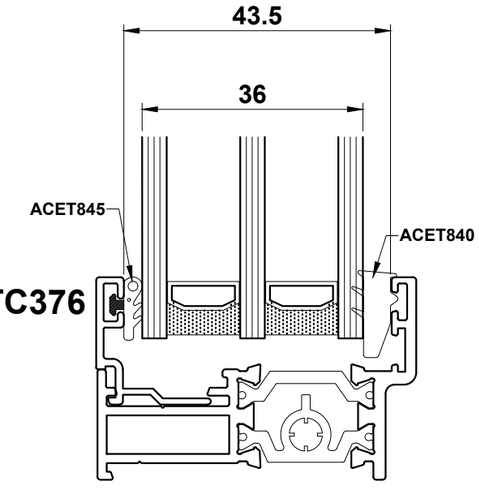

W20015
W20016
W20035

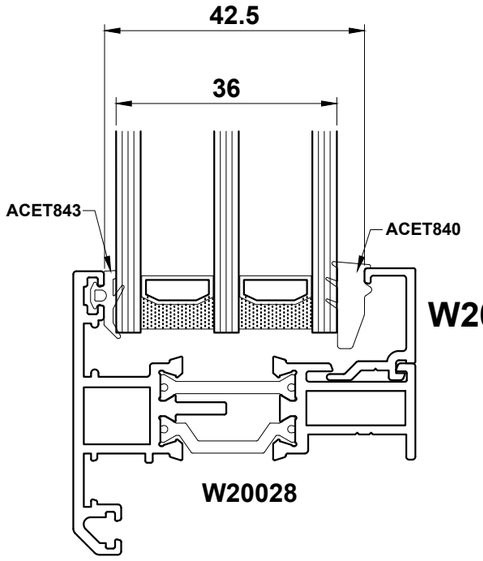

W20170

W20028

We recommend the use of Black Spacer Bar in the sealed units

Do Not Scale From This Drawing

W20015 Bay Pole Selection

W20065

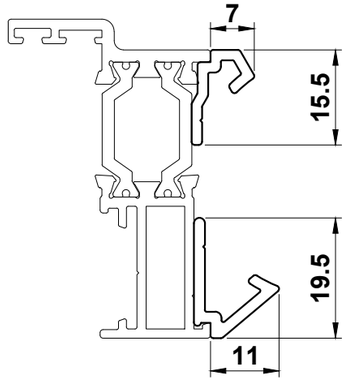

W20066

W20069

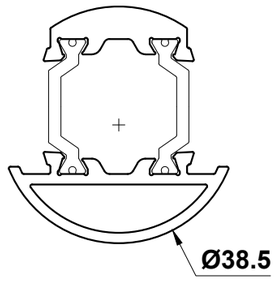

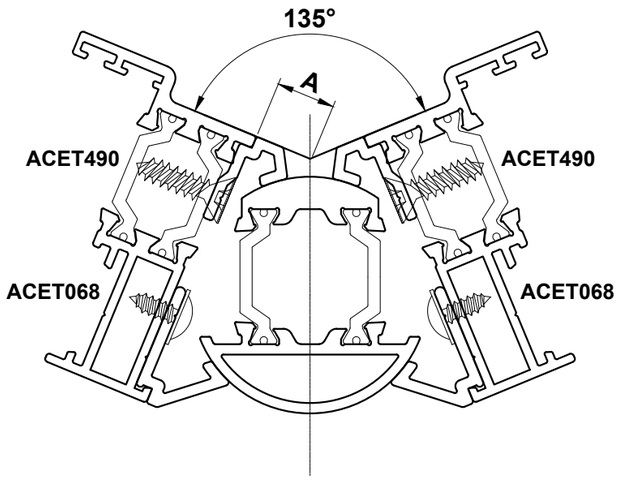

ANGLE	DEDUCTION 'A'
180°	18
175°	17
170°	16
165°	15.5
160°	14.5
155°	13.5
150°	12.5
145°	11.5
140°	10.5
135°	9.5
130°	8.5
125°	7.5
120°	6.5
115°	5

W20017 Bay Pole Selection

169°

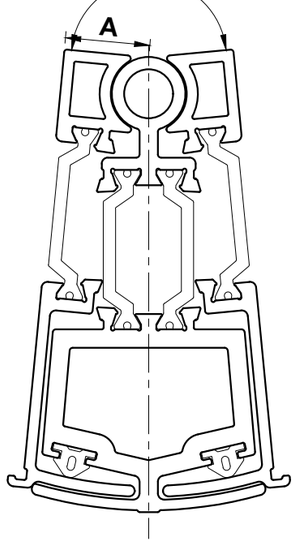

Important Note:
All joints must be adequately sealed using ACSIL04

149°

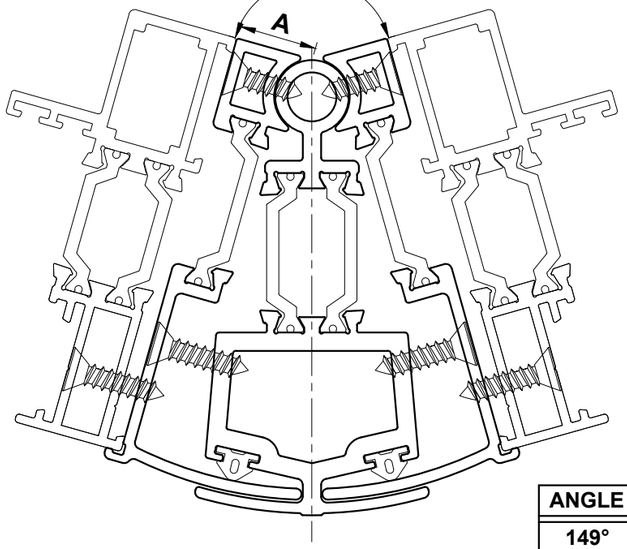

129°

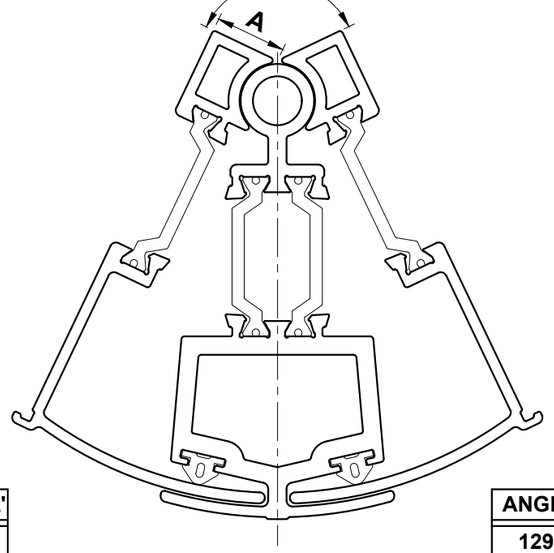

ANGLE	DEDUCTION 'A'
169°	14
165°	13.5
160°	13.6
155°	13
150°	13

ANGLE	DEDUCTION 'A'
149°	12.5
145°	12.5
140°	12
135°	12
130°	11.5

ANGLE	DEDUCTION 'A'
129°	11.5
125°	11.5
120°	11
115°	10.5

150°

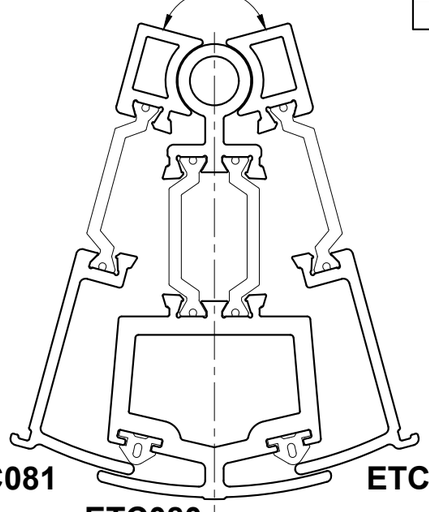

ETC081 ETC081

ETC080

130°

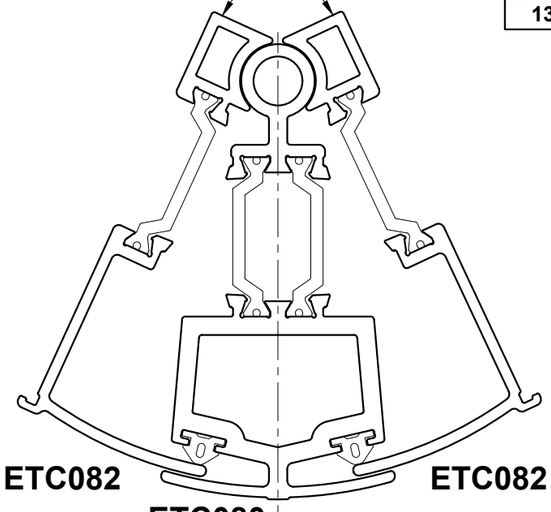

ETC082 ETC082

ETC080

115°

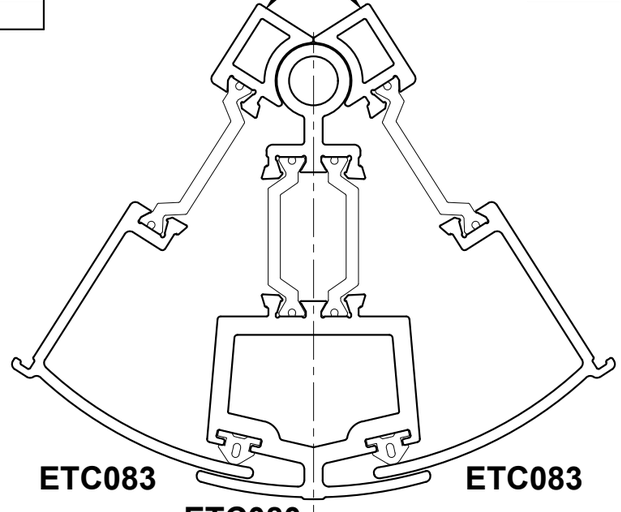

ETC083 ETC083

ETC080

Do Not Scale From This Drawing

Example Layout

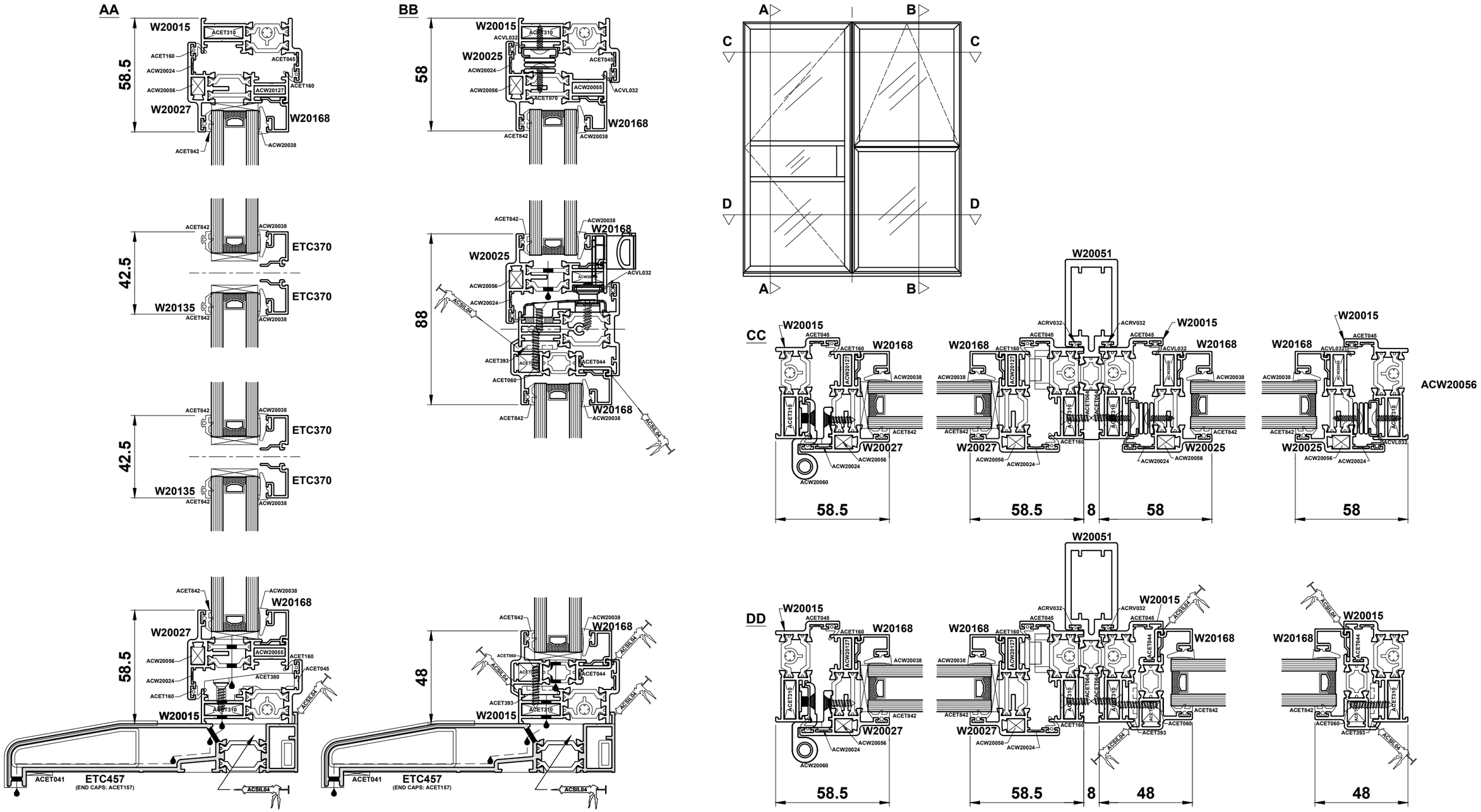

Do Not Scale From This Drawing

Fixing Strap Guide

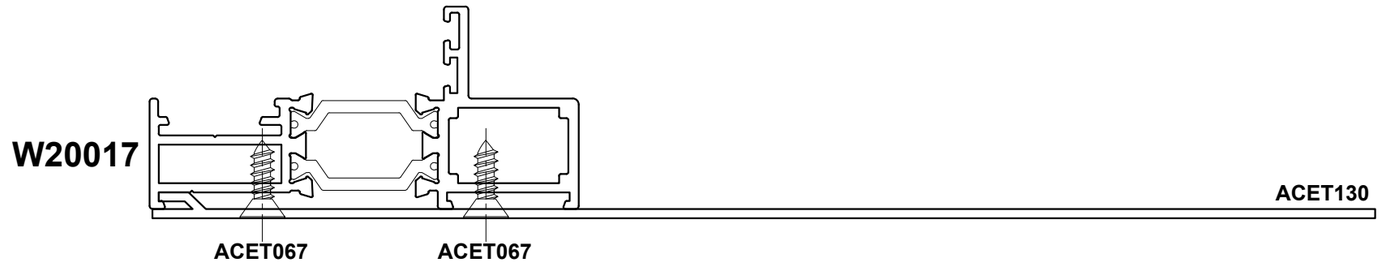

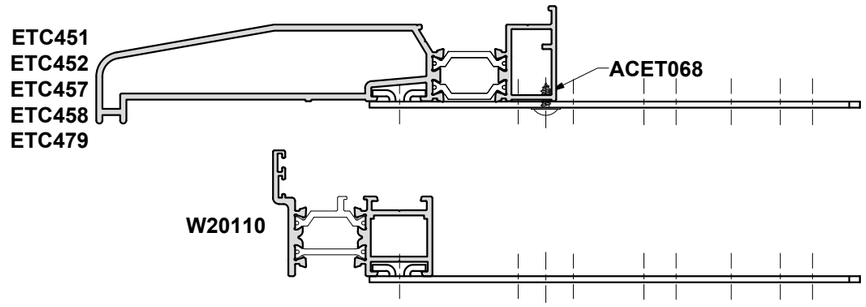

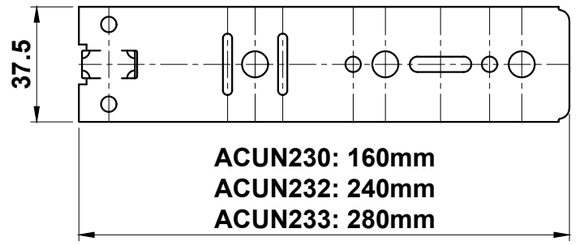

NOTE:
Fixing straps should be spaced a minimum of 150mm in from each end & at a maximum of 300mm apart.

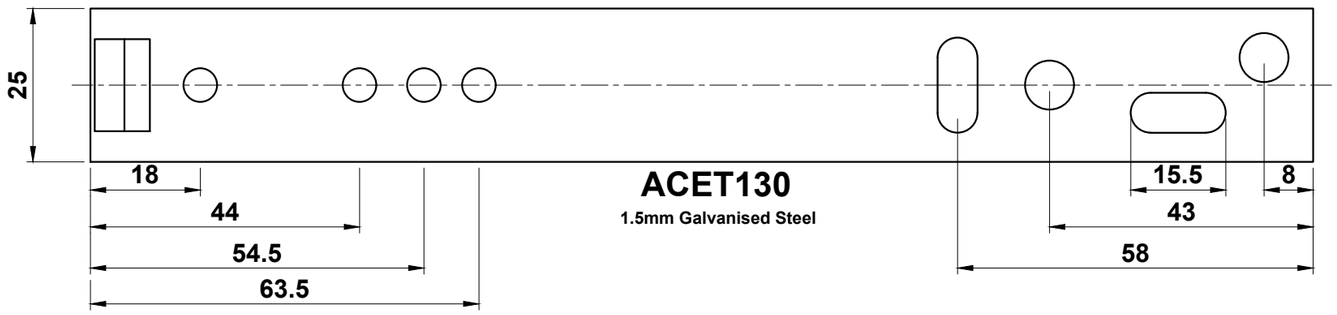

Do Not Scale From This Drawing

Section F

Sawing Tables

Section F

Cutting Information - Fixed Light Frame - Equal Leg W20015

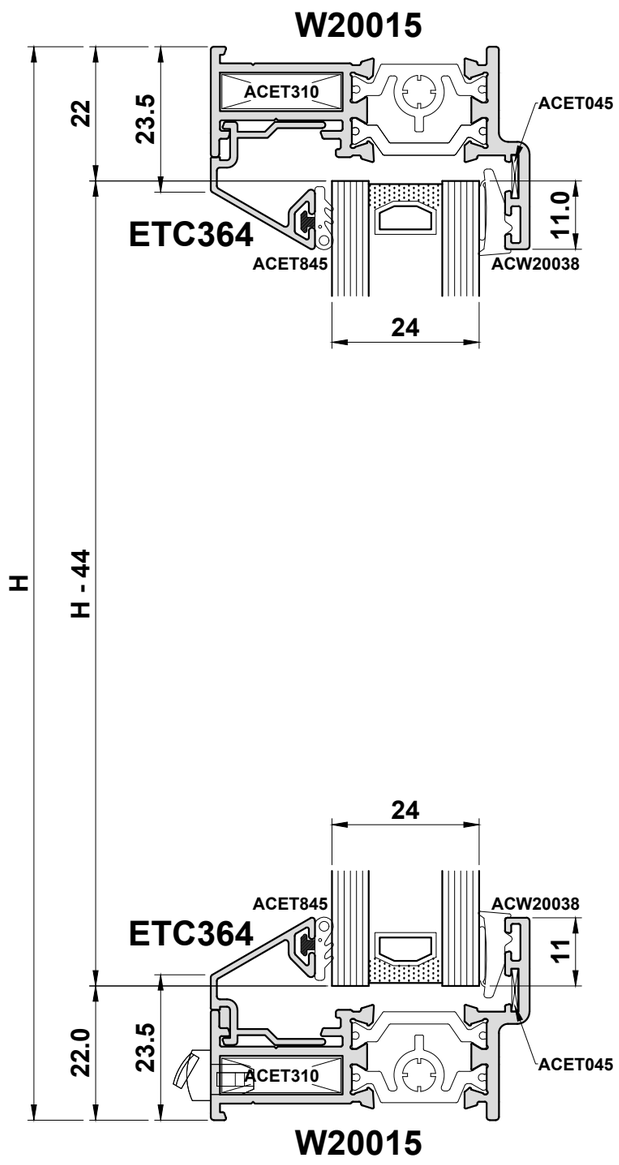

Sections

W20015		2		H
W20015		2		W
ETC364		2		W-36
ETC364		2		H-47

Glass
W - 44
H - 44

Accessories

ACET045	8	Chevron
ACET310	4	Cleat Outerframe
ACET845	2(W+H)	E Gasket
ACW20038	2(W+H)	Wedge Gasket
ACGSL045	2	Drainage Cap

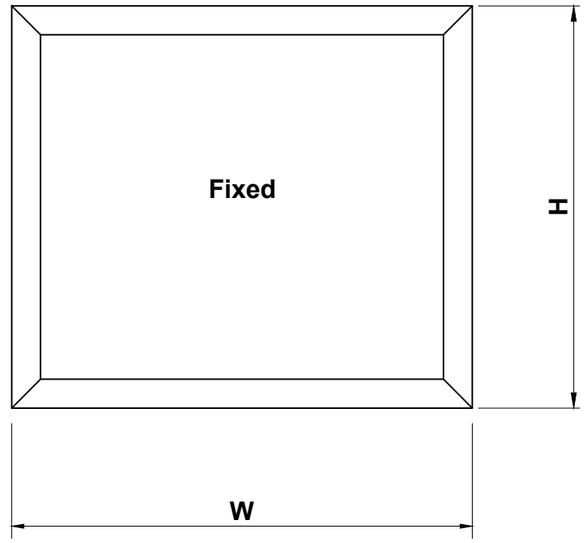

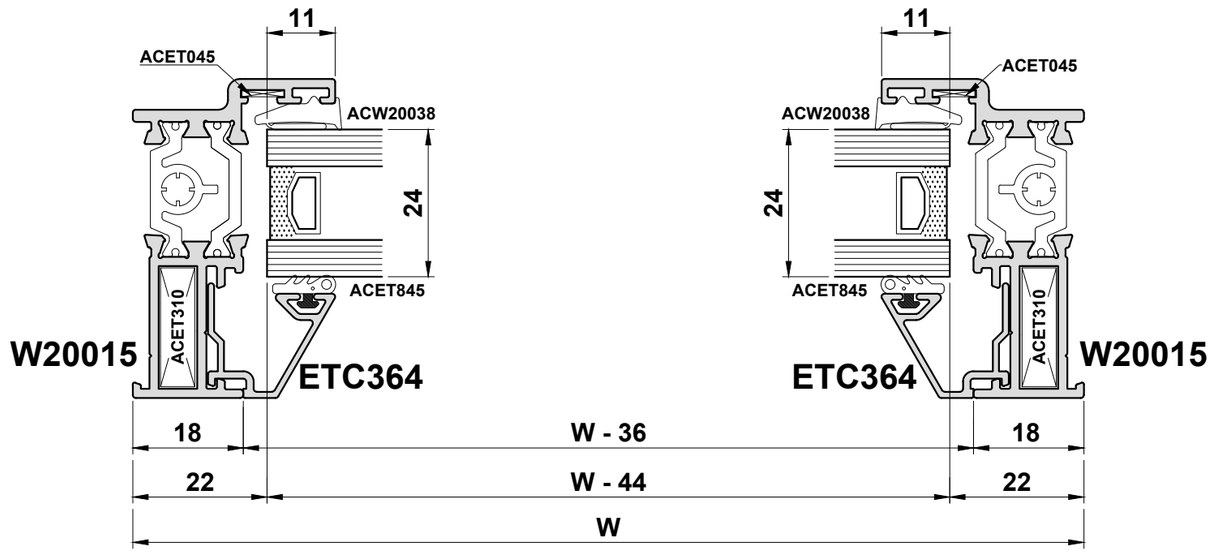

Do Not Scale From This Drawing

Cutting Information - Fixed Light Frame - With Reverse Adaptor

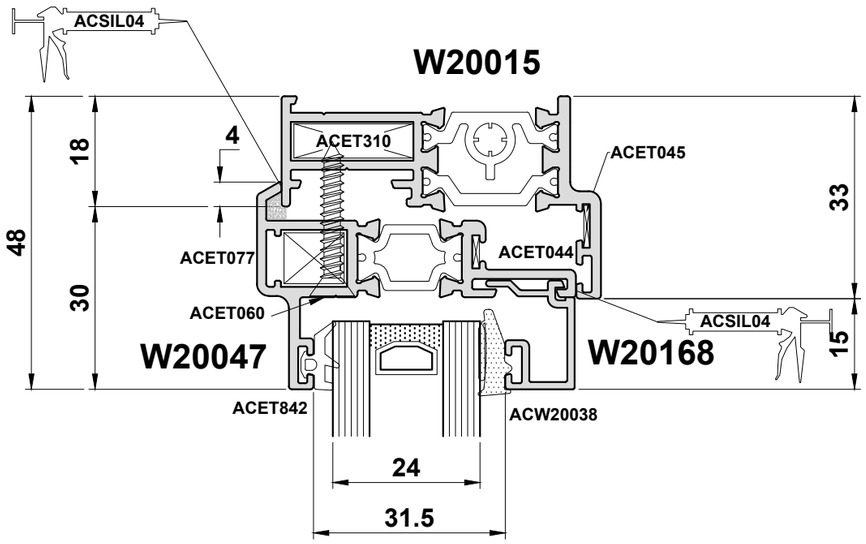

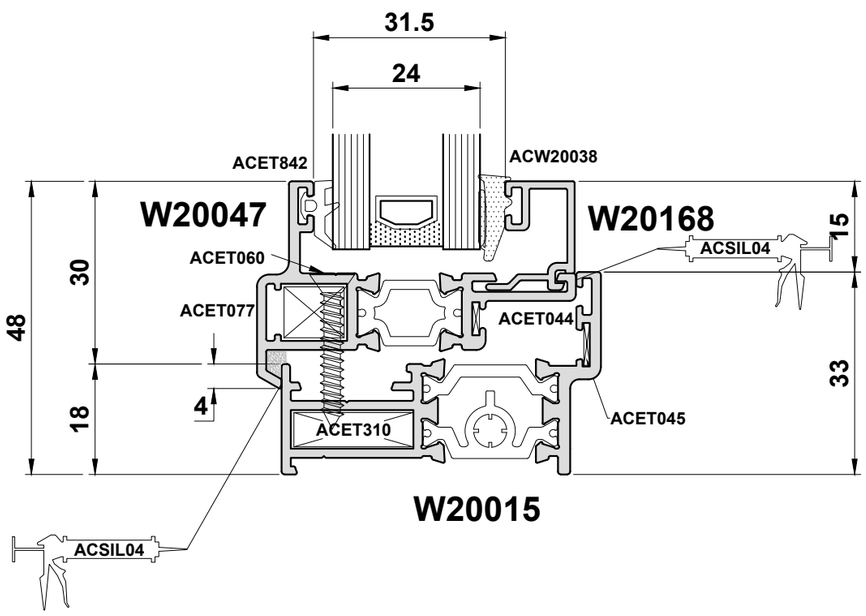

Sections

W20015		2		H
W20015		2		W
Bead		2		W-66
Bead		2		H-96
W20047		2		W-28
W20047		2		H-28

Accessories

ACET044	4	Stainless Steel : Chevron
ACET045	8	Stainless Steel : Chevron
ACET077	4	Corner Cleat
ACET310	4	Outerframe : Cleat
ACET393	8 +	Packer
ACET845	2(W+H)	E Gasket
ACGSL045	2	Drainage Cap
ACW20038	2(W+H)	Wedge Gasket

Glass
W - 44
H - 44

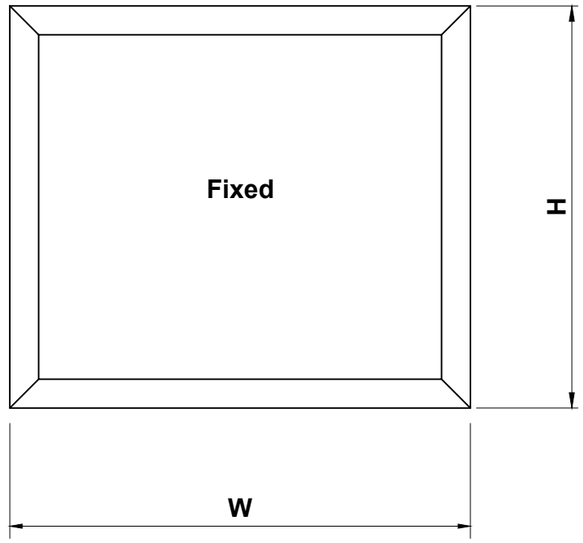

Do Not Scale From This Drawing

Cutting Information - Vent Frame using W20015 Outer Frame and W20025 Vent

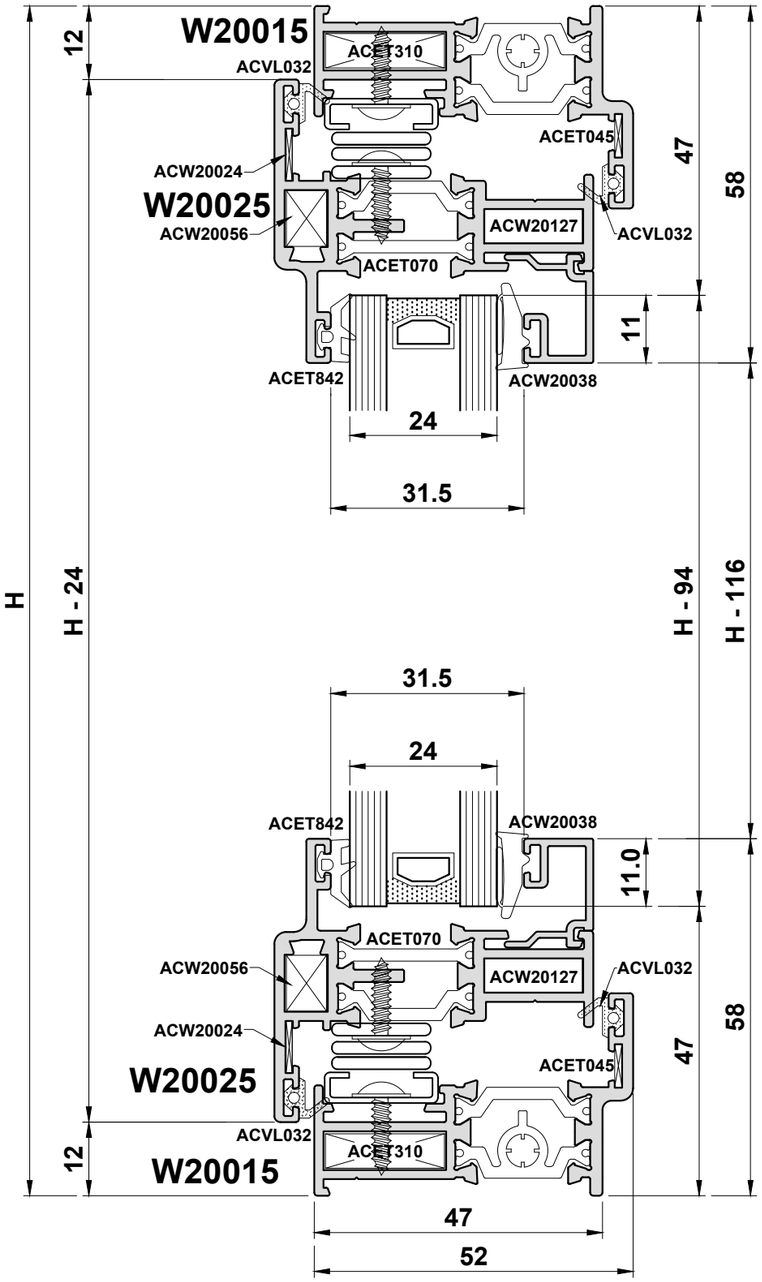

Sections

W20015		2		H
W20015		2		W
W20025		2		H-24
W20025		2		W-24
W20168		2		W-86
W20168		2		H-116

Accessories

ACET045	4	Chevron
ACET165	1	Espag Locking Handle
ACET310	4	Cleat Outerframe
ACET352	2 Pairs	Pull-in Blocks
ACET380	1	Run-up Block
ACET394	8	Keep & Stay Packer
ACET513	1	Cavity Hinge Protector
ACET842	2(W+H)	Gasket E
ACGSL045	2	Drainage Cap
ACIN****	1	Friction Stay / Hinge
ACVL032	4(W+H)	Flipper Gasket
ACW20*	1	Reverse Locking Espag
ACW20024	4	Chevron
ACW20028	1	Handle Fixing Block
ACW20038	2(W+H)	Wedge Gasket
ACW20055	4	Cleat Ventframe
ACW20056	4	Cleat Ventframe

Glass
W - 94
H - 94

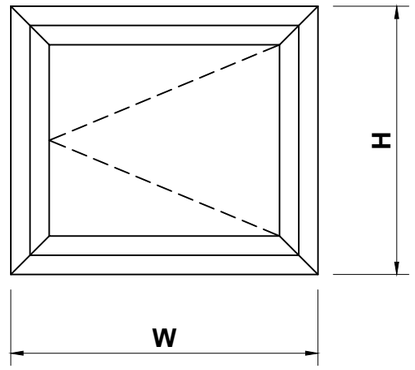

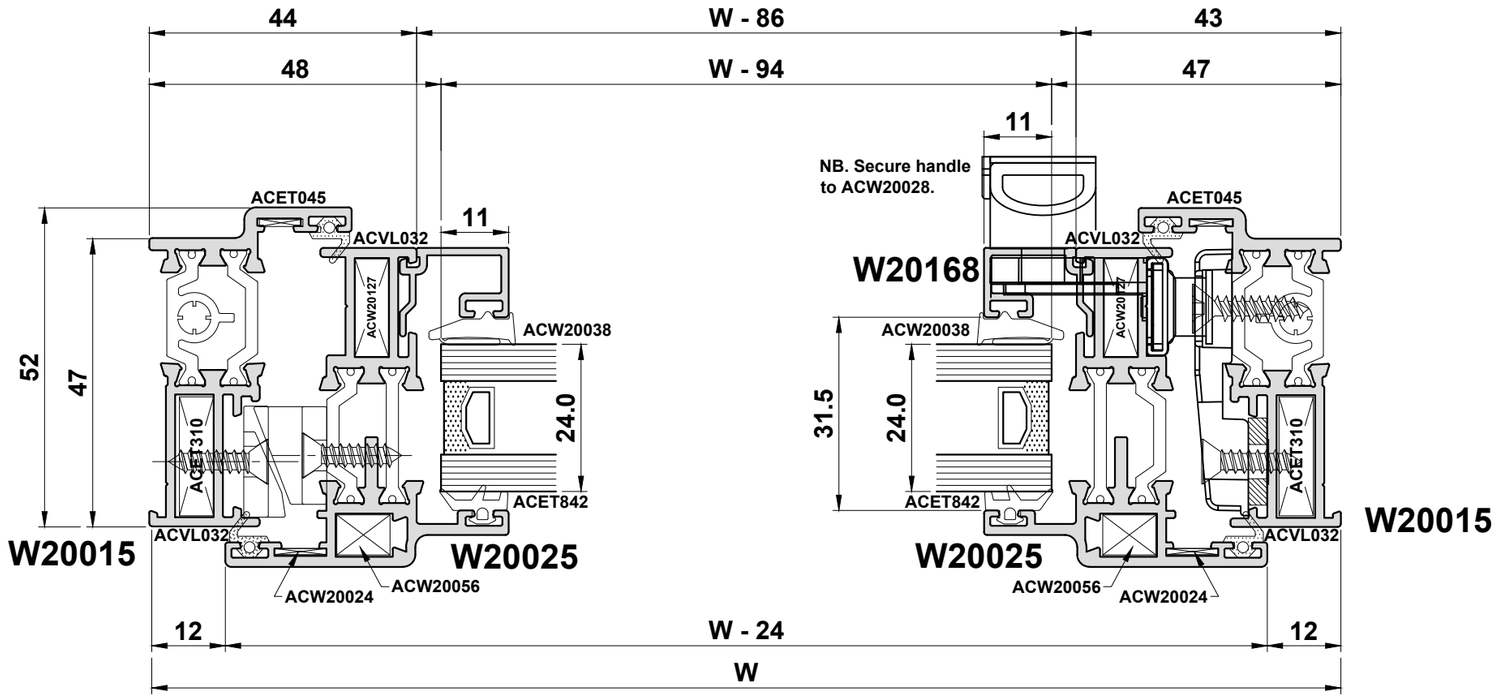

Do Not Scale From This Drawing

Cutting Information - Vent Frame using W20015 Outer Frame and W20025 Vent

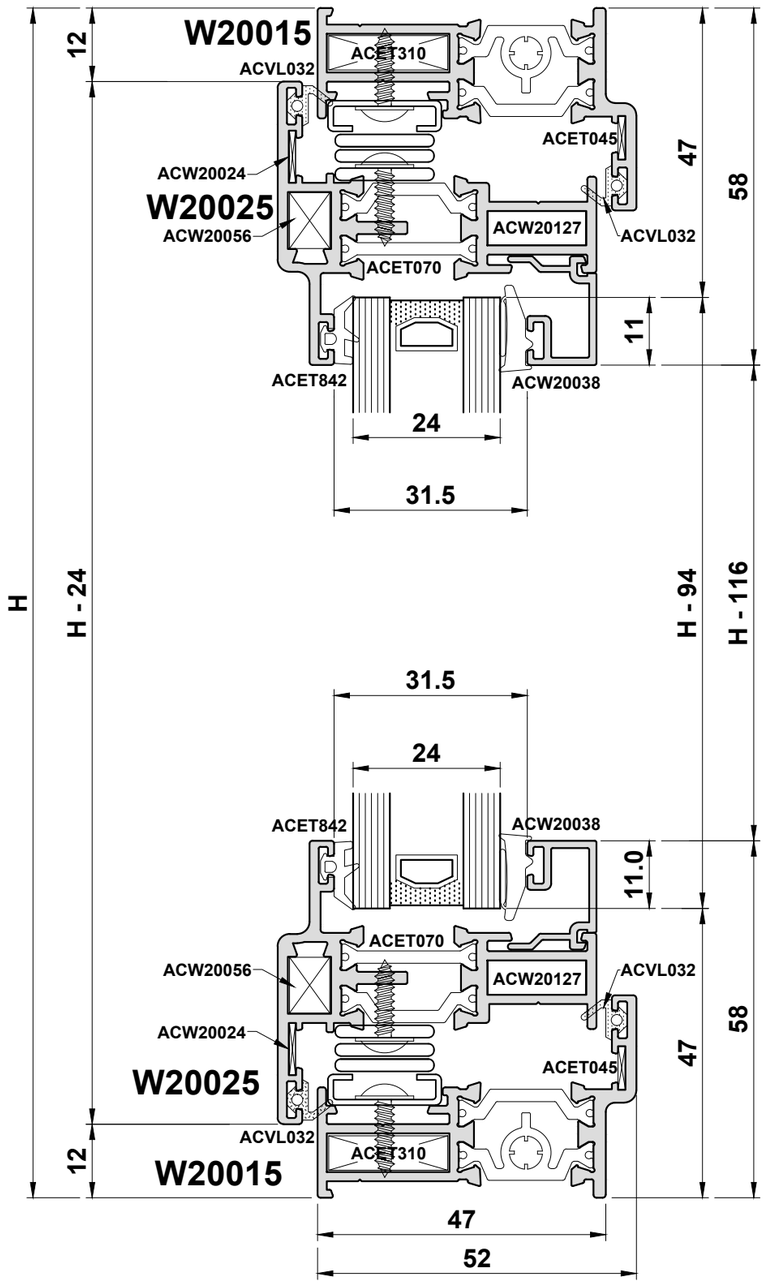

Sections

W20015		2		H
W20015		2		W
W20025		2		H-24
W20025		2		W-24
W20168		2		W-86
W20168		2		H-116

Accessories

ACET045	4	Chevron
ACET165	1	Espag Locking Handle
ACET380	1	Run-up Block
ACET394	8	Keep & Stay Packer
ACET513	1	Cavity Hinge Protector
ACET842	2(W+H)	Gasket E
ACGSL045	2	Drainage Cap
ACIN****	1	Friction Stay / Hinge
ACVL032	4(W+H)	Flipper Gasket
ACW20*	1	Reverse Locking Espag
ACW20024	4	Chevron
ACW20028	1	Handle Fixing Block
ACW20038	2(W+H)	Wedge Gasket
ACW20055	4	Cleat Ventframe
ACW20056	4	Cleat Ventframe

Glass
W - 94
H - 94

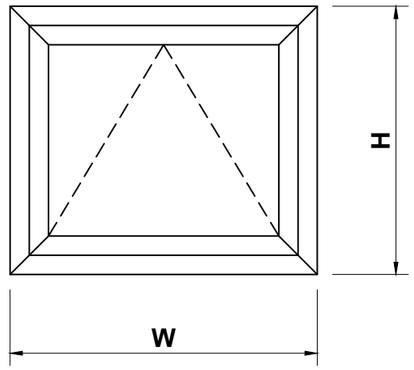

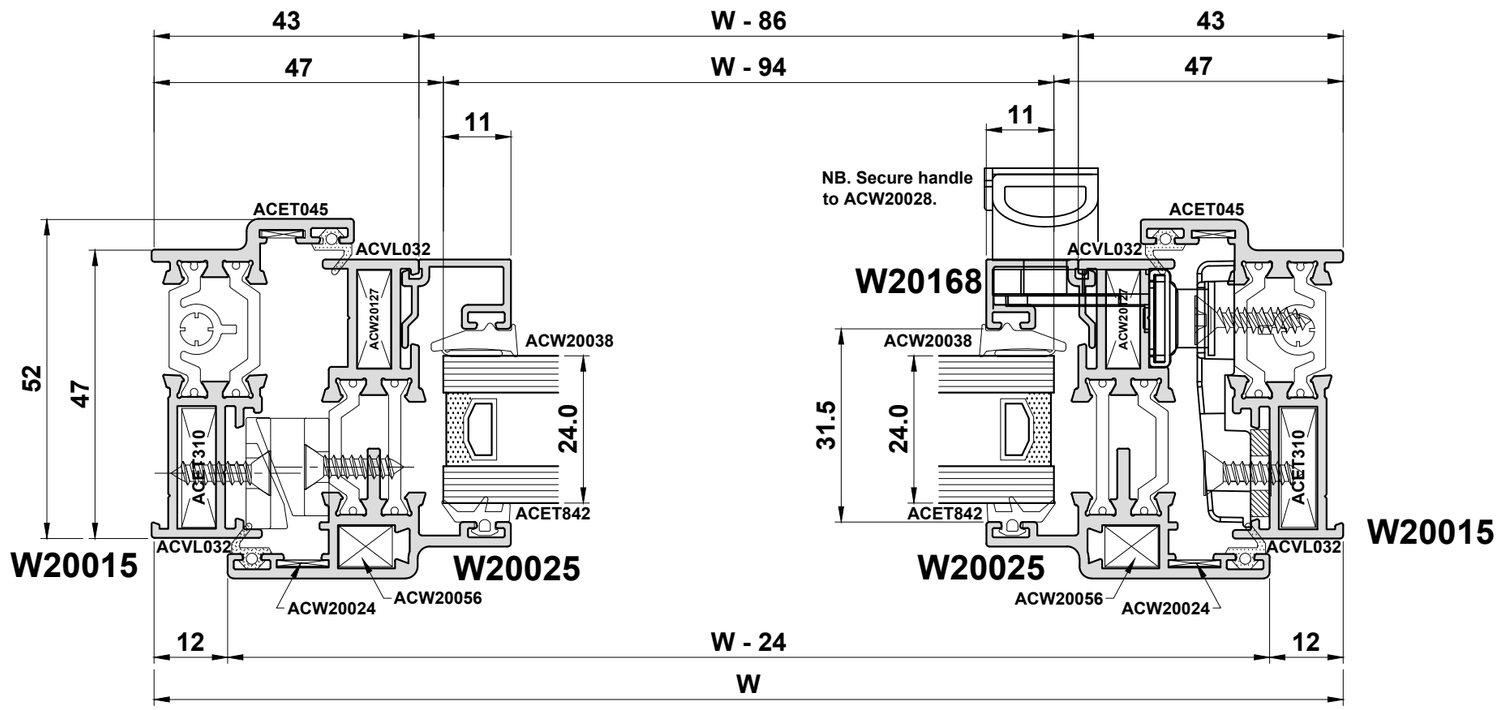

Do Not Scale From This Drawing

Cutting Information - Opening Vent adjacent to Fixed Light

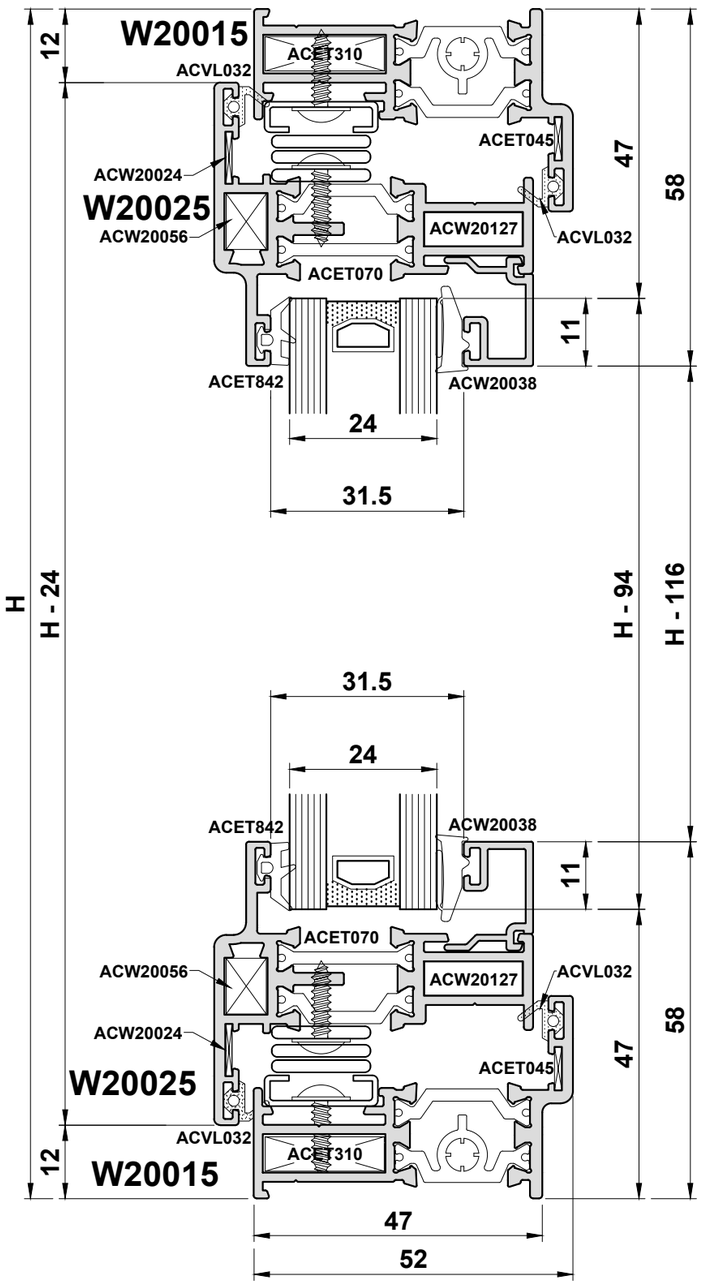

Profiles

W20015		2		H
W20015		2		W
W20025		2		H - 24
W20025		2		W1 - 15
W20035		1		H - 36
W20168		2		H - 116
ETC370		2		H - 66
W20168		2		W1 - 77
ETC370		2		W2 - 27

Accessories

ACET045	4	Chevron
ACET114	2	Anti-Twist Clip
ACET165	1	Espag Locking Handle
ACET310	4	Cleat Outerframe
ACET352	2 Pairs	Pull-in Blocks
ACET380	1	Run-up Block
ACET845	2H + 2W2	Gasket E
ACGSL045	2	Drainage Cap
ACVL032	4(H)	Flipper Gasket
ACVL032	2(W)	Flipper Gasket
ACW20*	1	Reverse Locking Espag
ACW20024	4	Chevron
ACW20028	1	Handle Fixing Block
ACW20038	4H + 2W	Wedge Gasket
ACW20055	4	Cleat Ventframe
ACW20056	4	Cleat Ventframe
	1	Friction Stays

Glass
W1 - 85 x H - 94
W2 - 35 x H- 44

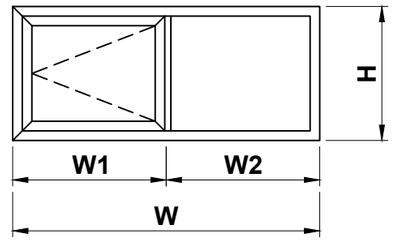

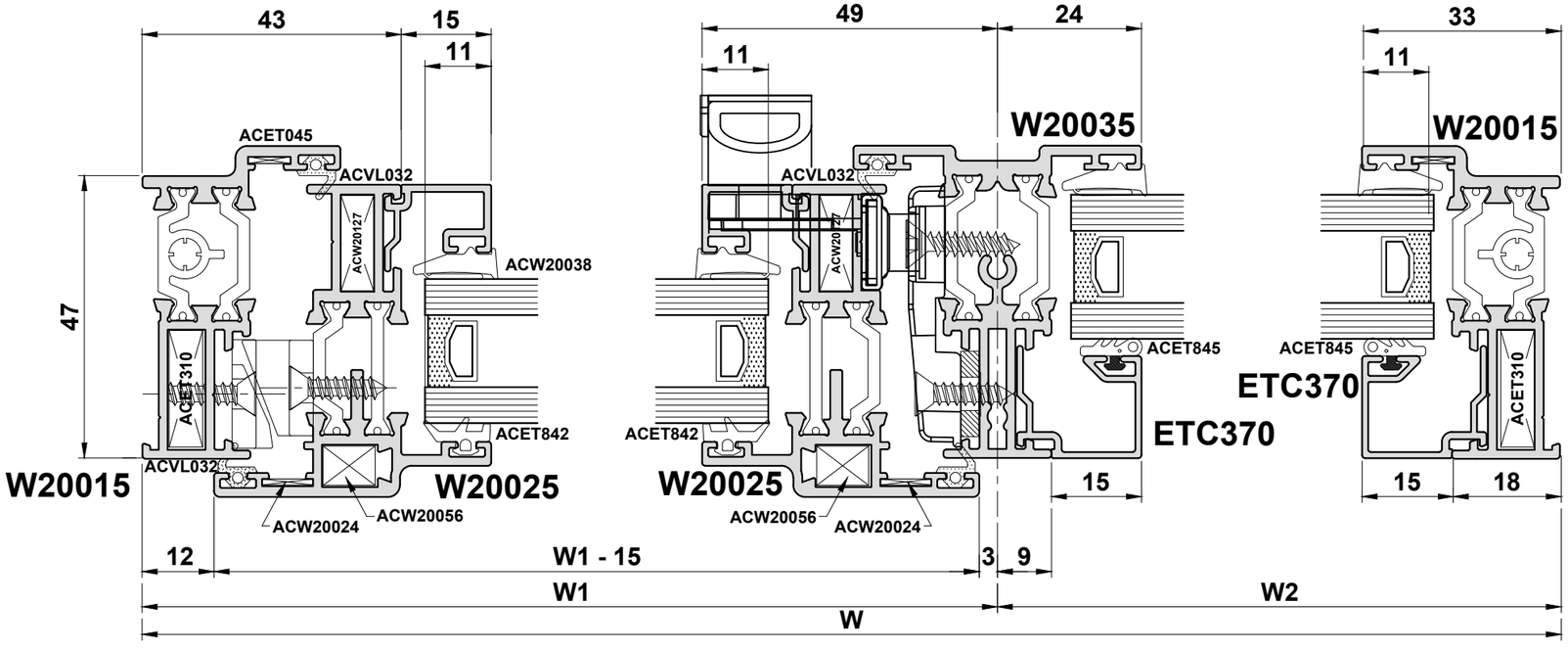

Do Not Scale From This Drawing

Cutting Information - Opening Vent over Fixed Light

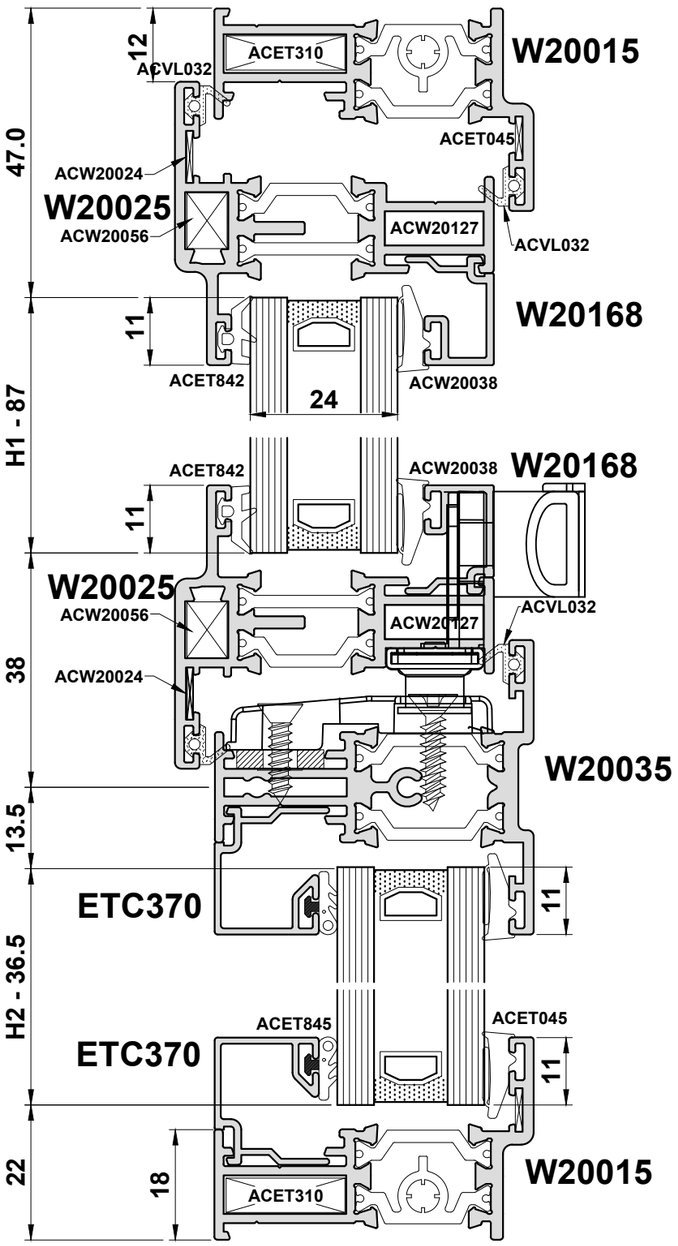

Profiles

W20015		2		H
W20015		2		W
W20025		2		W - 24
W20025		2		H1 - 15
W20035		1		W - 36
W20168		2		W - 94
W20168		2		W - 36
W20168		2		H1 - 107
W20168		2		H2 - 57

Glass
W - 94 x H1 - 85
W- 44 x H2 - 35

Accessories

ACET045	4	Chevron
ACET114	2	Anti-Twist Clip
ACET165	1	Espag Locking Handle
ACET310	4	Cleat Outerframe
ACET334	2	PVC Transom Loc. Block
ACET352	2 Pairs	Pull-in Blocks (Optional)
ACET380	2	Run-up Block
ACET845	4H + 2W	Gasket E
ACGSL045	2	Drainage Cap
ACVL032	4(H)	Flipper Gasket
ACVL032	4(W)	Flipper Gasket
ACW20*	1	Reverse Locking Espag
ACW20024	4	Chevron
ACW20028	1	Handle Fixing Block
ACW20038	4H + 2W	Wedge Gasket
ACW20055	4	Cleat Ventframe
ACW20056	4	Cleat Ventframe
	1	Friction Stays

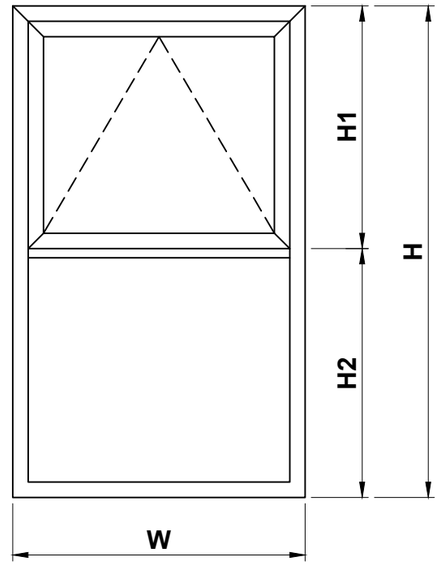

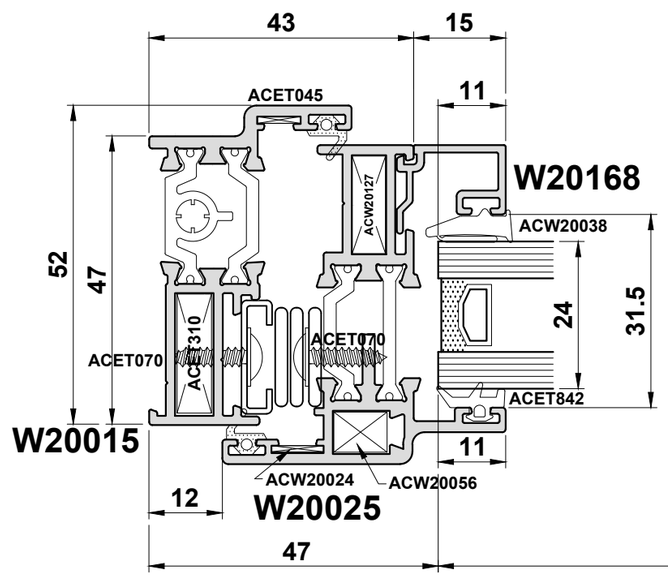

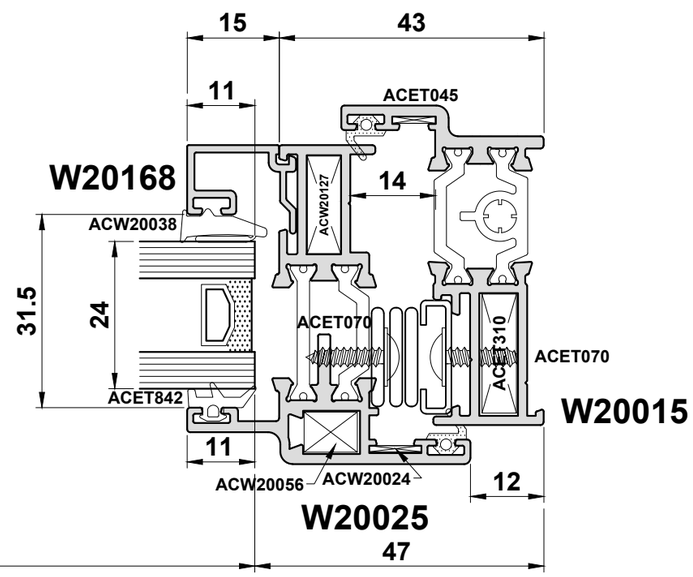

Do Not Scale From This Drawing

Cutting Information - Opening Vent adjacent to Open In Vent

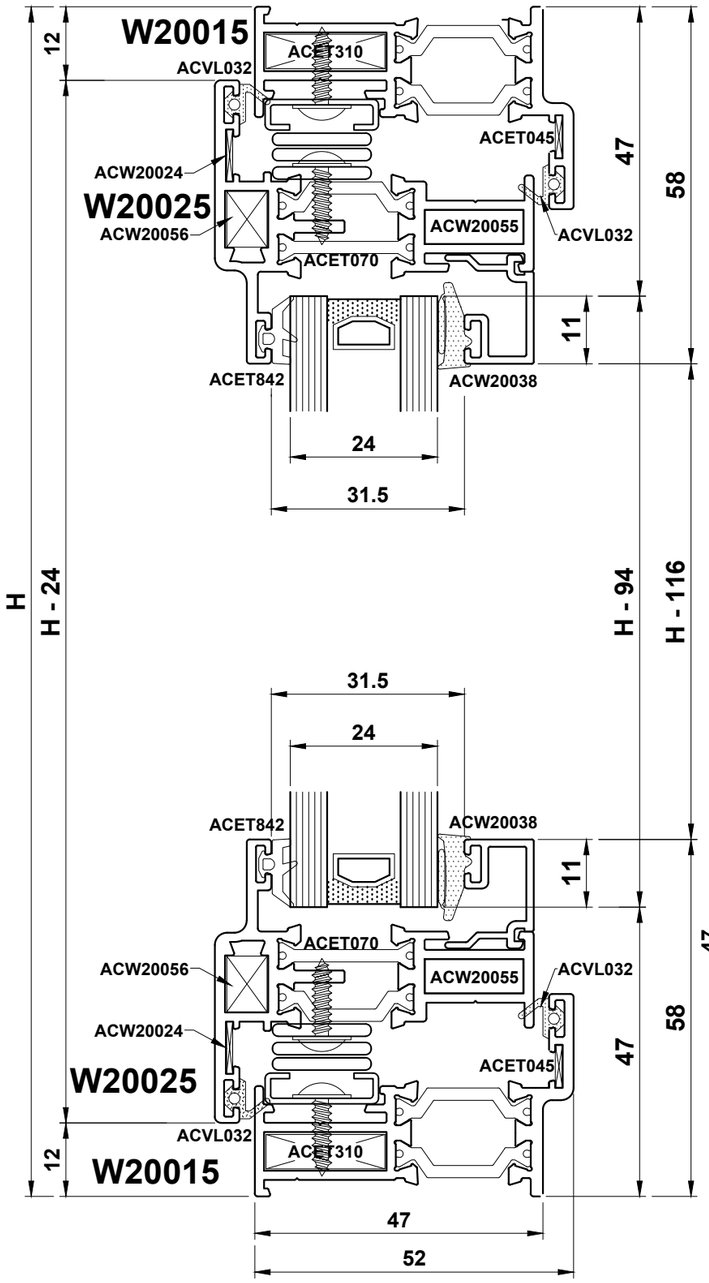

Profiles

W20015		2		H
W20015		2		W
W20025		4		H - 24
W20025		4		W1 - 15
W20035		1		H - 36
W20168		2		H - 66
W20168		2		H - 66
W20168		2		W1 - 77
W20168		2		W2 - 77

Accessories

ACET045		4	Chevron
ACET114		2	Anti-Twist Clip
ACET165		2	Espag Locking Handle
ACET310		4	Cleat Outerframe
ACET352		4 Pairs	Pull-in Blocks
ACET380		2	Run-up Block
ACGSL045		2	Drainage Cap
ACVL032		4(H)	Flipper Gasket
ACVL032		4(W)	Flipper Gasket
ACW20*		2	Reverse Locking Espag
ACW20024		8	Chevron
ACW20028		2	Handle Fixing Block
ACW20038		4H + 2W	Wedge Gasket
ACW20055		8	Cleat Ventframe
ACW20056		8	Cleat Ventframe
		2	Friction Stays (Pairs)

Glass
W1 - 85 x H - 94
W2 - 85 x H- 94

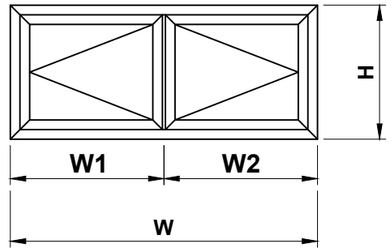

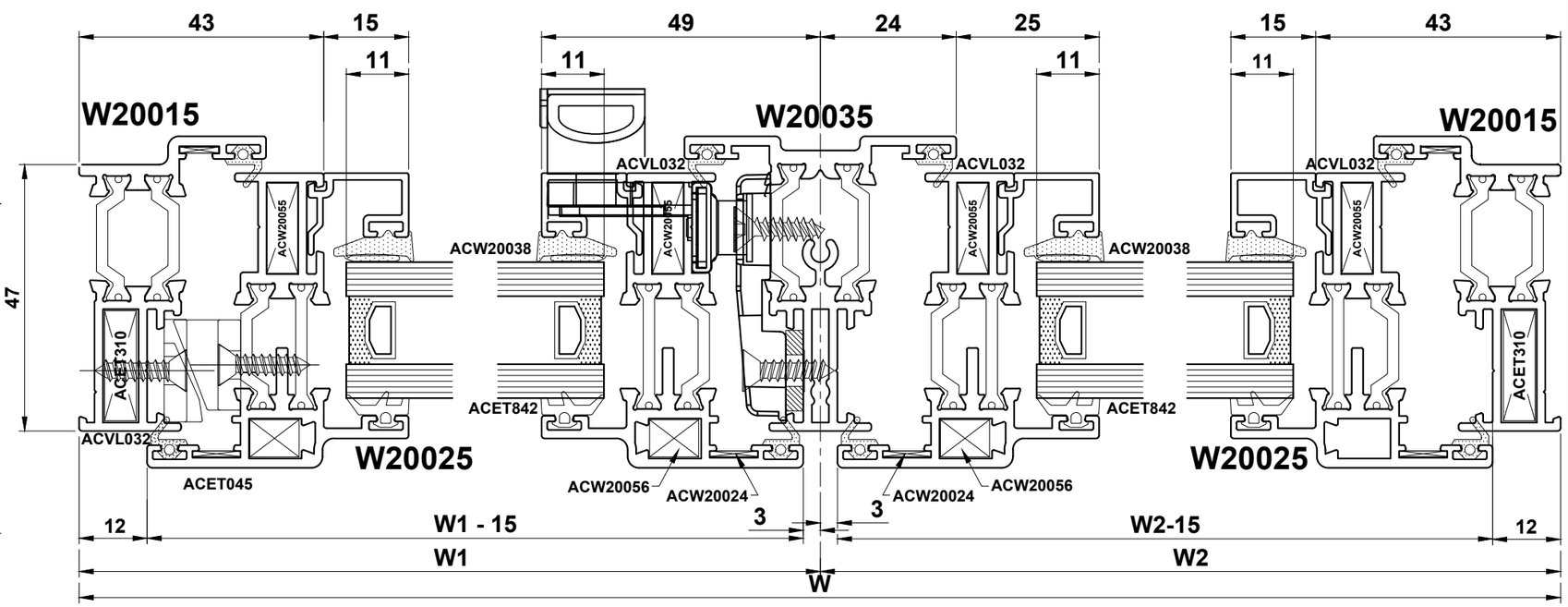

Do Not Scale From This Drawing

Cutting Information - Tilt & Turn

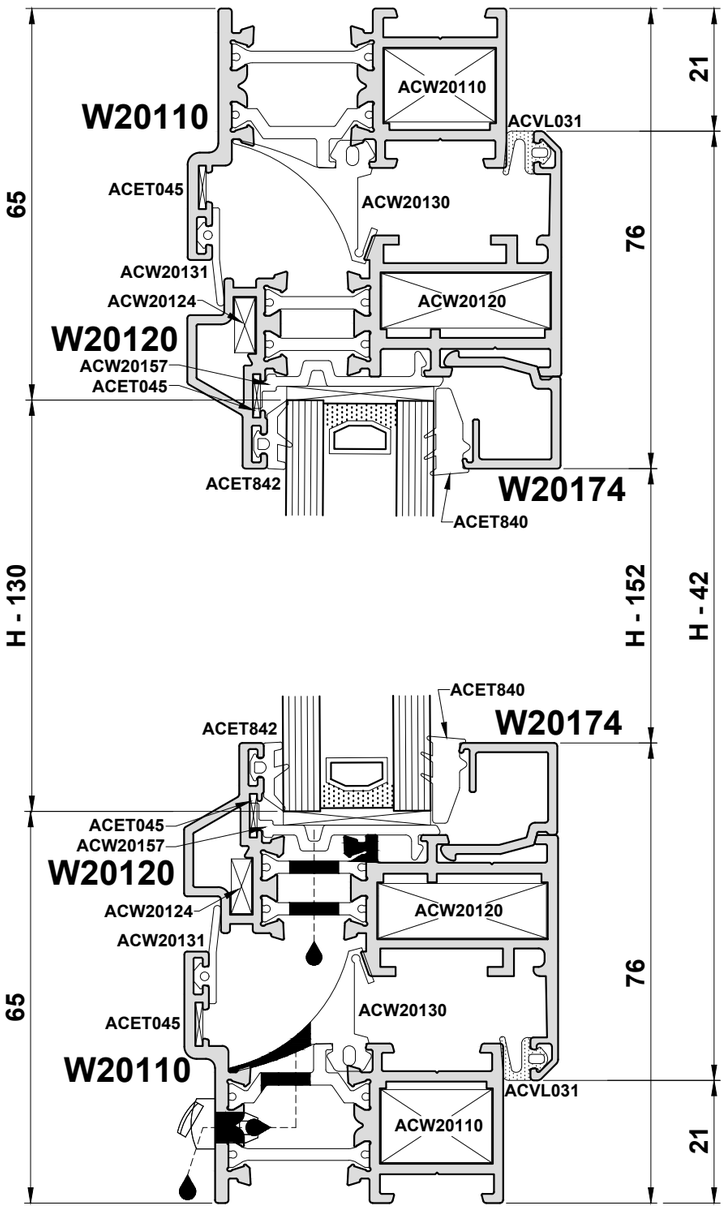

Sections

W20110		2		H
W20110		2		W
W20120		2		H-42
W20120		2		W-42
W20174		2		W-122
W20174		2		W-152

Accessories

ACET045	8	Chevron
ACET840	2(W+H)	Wedge Gasket
ACET842	2(W+H)	Gasket E
ACGSL045	2	Drainage Cap
ACW20110	4	Outer Frame Cleat
ACW20120	4	Inner Sash Cleat
ACW20124	4	Outer Sash Cleat
ACW20131	2(W+H)	External Outer Frame Gasket
ACW20133	4	ACW20133 Corner Moulding
ACW20157	6	Bridge Packer
ACVL031	2(W+H)	Flipper Gasket

Please refer to the SB Chrono or Fapim manual for tilt & turn hardware

Glass
W - 130
H - 130

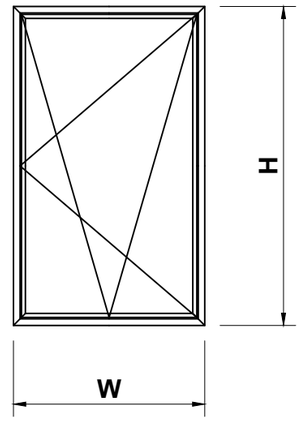

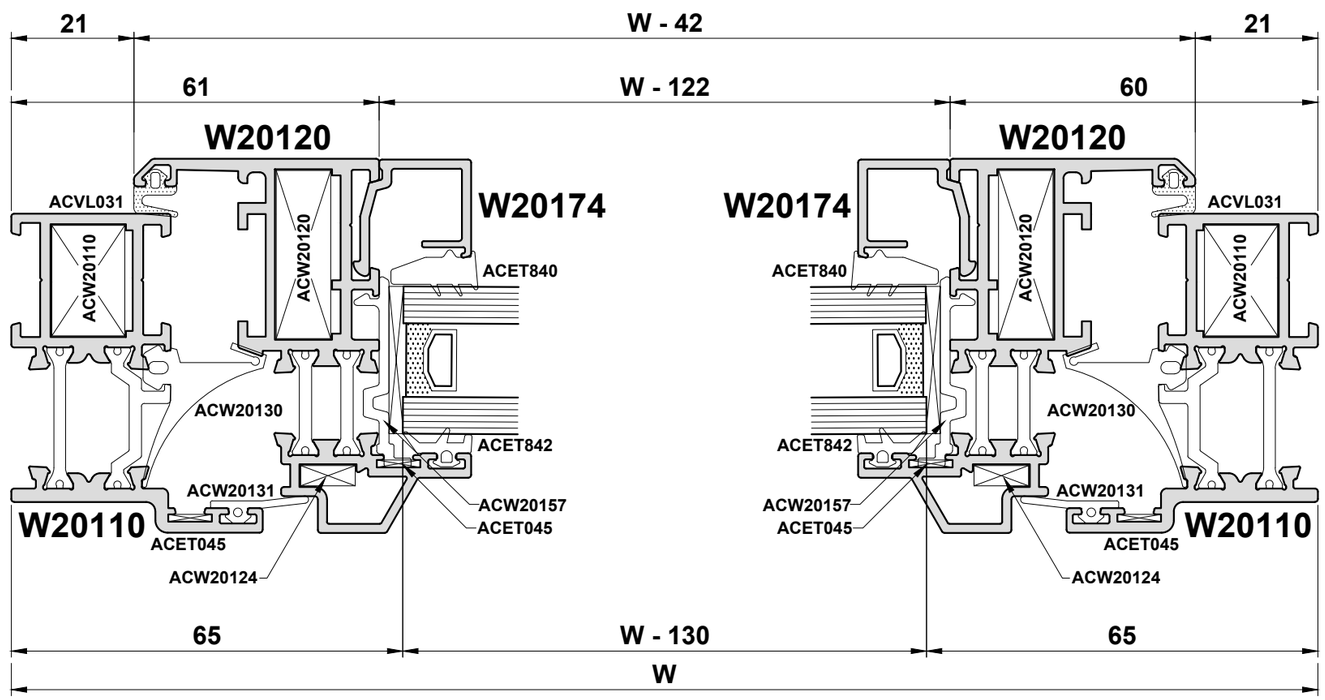

Do Not Scale From This Drawing

Cutting Information - Tilt & Turn adjacent to Fixed Light

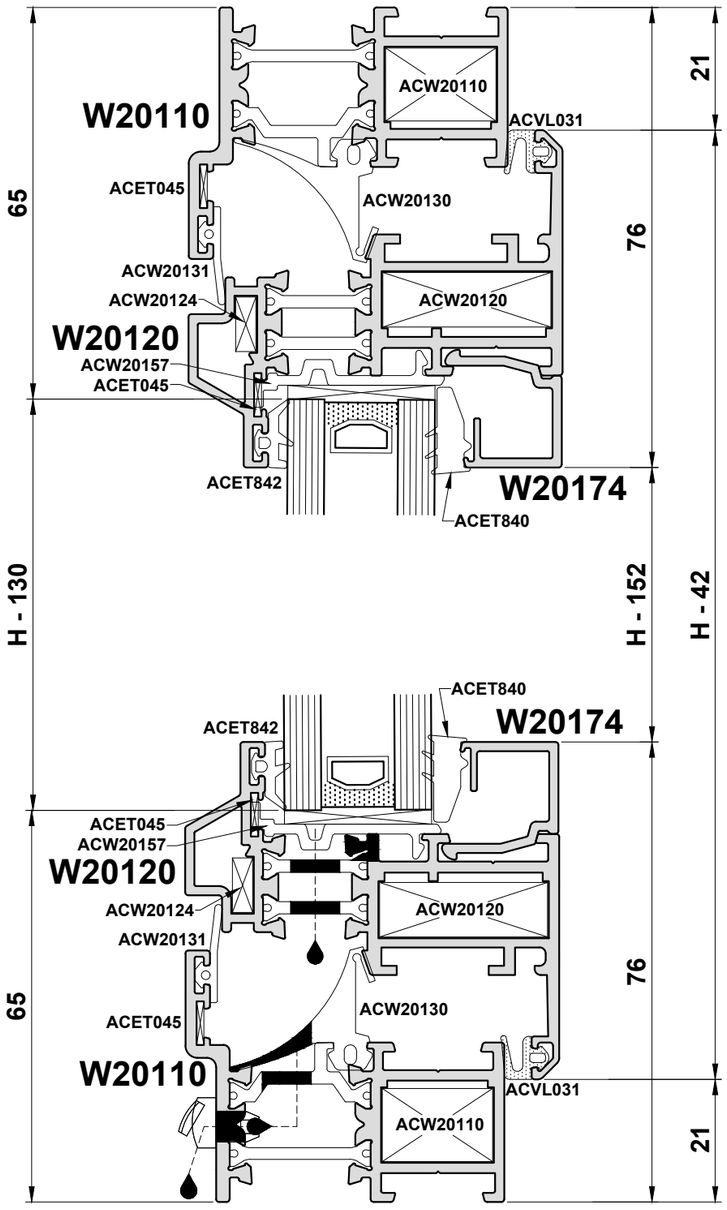

Sections

W20110		2		H
W20110		2		W
W20120		2		H-42
W20120		2		W1-28
W20130		1		H-52
W20174		2		W1-106
W20174		2		H-150
W20174		2		W2-38
W20174		2		H-82

Accessories

ACET045	8	Chevron
ACET840	2xW + 4xH	Wedge Gasket
ACET842	2xW + 4xH	Gasket E
ACGSL045	4	Drainage Cap
ACW20110	4	Outer Frame Cleat
ACW20120	4	Inner Sash Cleat
ACW20124	4	Outer Sash Cleat
ACW20131	2xW1 + 2xH	External Outer Frame Gasket
ACW20133	4	ACW20133 Corner Moulding
ACW20157	8	Bridge Packer
ACVL031	2xW1 + 2xH	Flipper Gasket
MUA067	6	Transom Screws

Please refer to the SB Chrono or Fapim manual for tilt & turn hardware

Glass
W1 - 116 x H - 130
W2 - 46 x H - 60

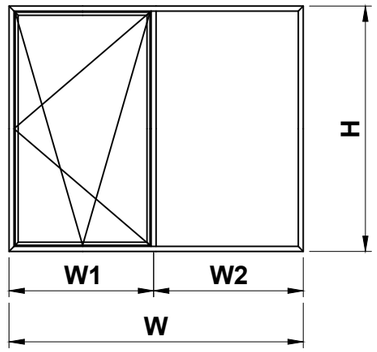

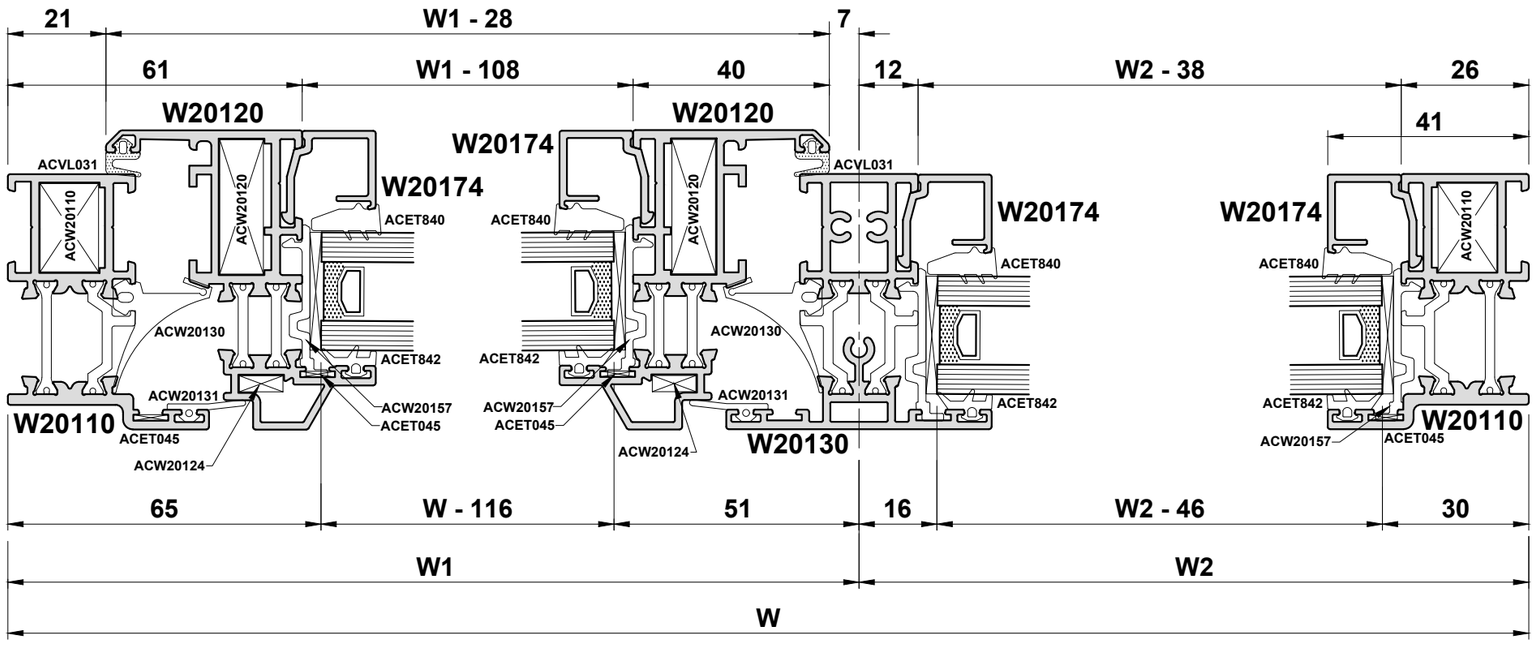

Do Not Scale From This Drawing

Cutting Information - Open Out Single Door

Profiles

W20015	2	H
W20015	2	W
W20027	2	W - 25
W20027	2	H - 25
W20135	2	W - 87
W20038	1	285
W20168	4	W - 87
W20168	2	W - 152.5
W20168	2	H1 - 80
W20168	2	H2 - 80
W20168	2	H3 - 43

Glass

G1	1 x	W - 95 x H1 - 57.5
G2	1 x	W - 95 x H2 - 57.5
G3	1 x	W - 160.5 x H3 - 20

Accessories

ACET045	S/S Chevron	4	ACW20066L/R	Centre Keep	1
ACET066	Transom/Mullion Screw	6	ACW20067	Roller Keeps	4
ACET067	S/S CSK S/T Screw	15	ACW20058	Cylinder	1
ACET160	Outer Frame Seal	2 x (W-60) + 2 x (H-60)	ACW20127	Vent Frame Cleats	4
ACET160	Vent Frame Seal	2 x (W-25) + 2 x (H-25)			
ACET310	Outer Frame Cleats	4			
ACET380	Run-Out Block	1			
ACET390	Polyamide Screw	8			
ACET842	E Gasket	6x(W-95) + 2x(H-95)			
ACGSL045	Drainage Cap	2			
ACW20024	S/S Chevron	4			
ACW20038	Wedge Gasket	6x(W-95) + 2x(H-95)			
ACW20056	Vent Frame Cleats	4			
ACW20060	Butt Hinge	4			
ACW20061	Door Handle	1 Pair			
ACW20065	Multi-Point Lock	1			

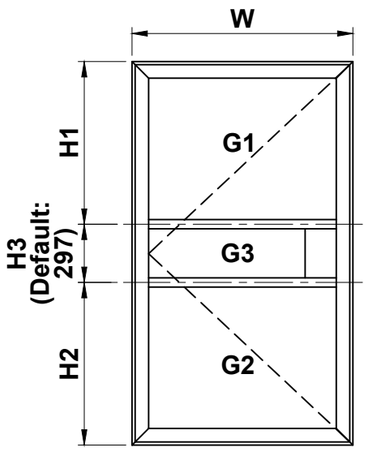

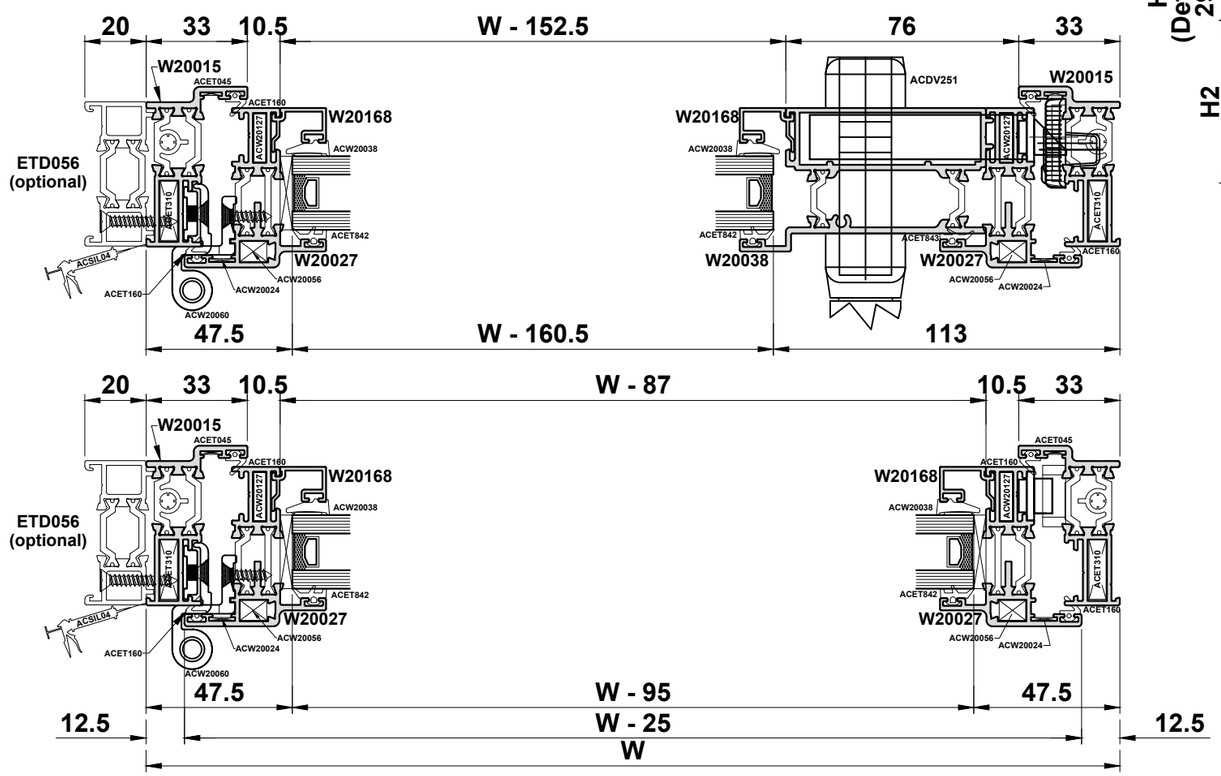

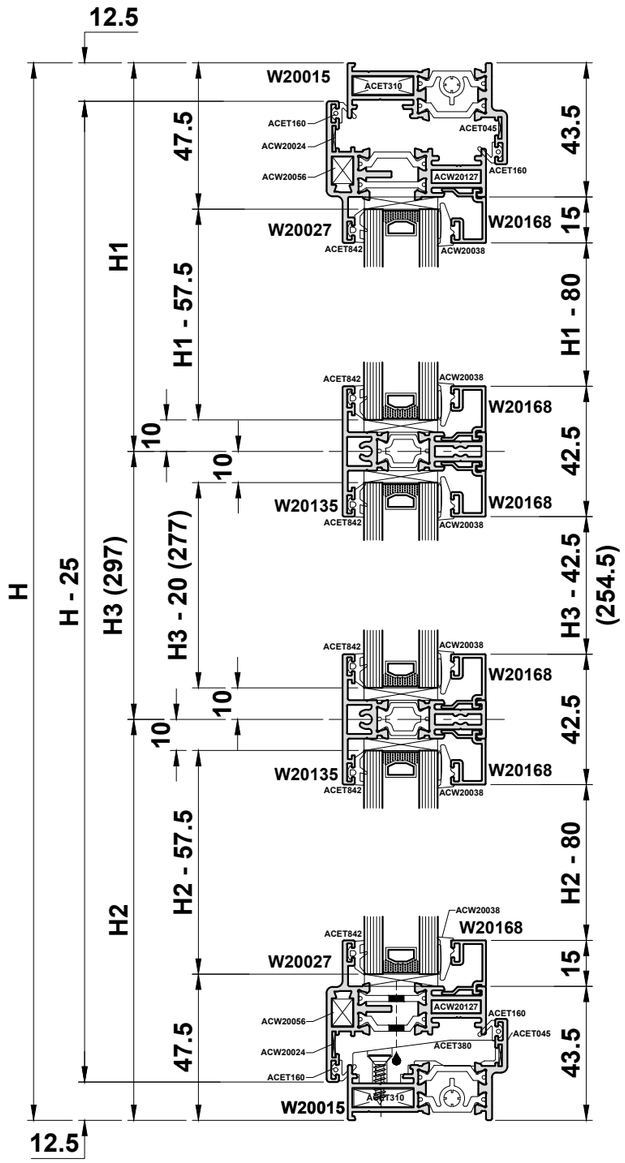

Do Not Scale From This Drawing

Cutting Information - Open Out Double Door

Profiles

W20015	2	H
W20015	2	W
W20027	4	W/2 - 16
W20027	4	H - 25
W20037	4	W/2 - 78
W20038	2	285
W20048	1	H - 54
W20168	8	W/2 - 78
W20168	4	W/2 - 152.5
W20168	4	H1 - 80
W20168	4	H2 - 80
W20168	4	H3 - 43

Glass

G1	2 x	W/2 - 86 x H1 - 57.5
G2	2 x	W/2 - 86 x H2 - 57.5
G3	2 x	W/2 - 151.5 x H3 - 20

Accessories

ACET045	Chevrons	4	ACW20067	Roller Keeps	4
ACET066	Transom/Mullion Screw	20	ACVL432	Shootbolt	2
ACET067	S/S CSK S/T Screw	15	ACW20127	Vent Frame Cleats	8
ACET160	Outer Frame Seal	2 x (W-60) + 2 x (H-60)	ACW20432	Shoot Bolt Keeps	2
ACET160	Vent Frame Seal	4 x(W/2-16) + 2 x(H-25)			
ACET310	Outer Frame Cleats	4			
ACET380	Run-Out Block	2			
ACET390	Polyamide Screw	8			
ACET842	E Gasket	6x(W/2-85) + 4x(H-95)			
ACGSL045	Drainage Caps	2			
ACW20024	Chevrons	8			
ACW20038	Wedge Gasket	6x(W/2-85) + 4x(H-95)			
ACW20048	W20048 End Cap	1 Pair			
ACW20056	Vent Frame Cleats	8			
ACW20058	Cylinder	1			
ACW20061	Door Handle	1 Pair			
ACW20065	Multi-Point Lock	1			
ACW20066L/R	Centre Keep	1			

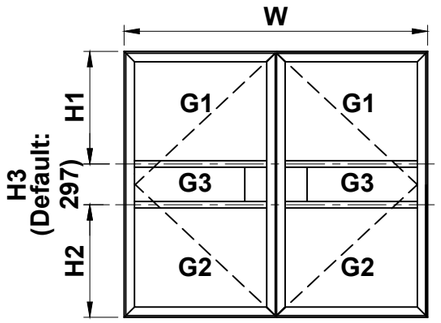

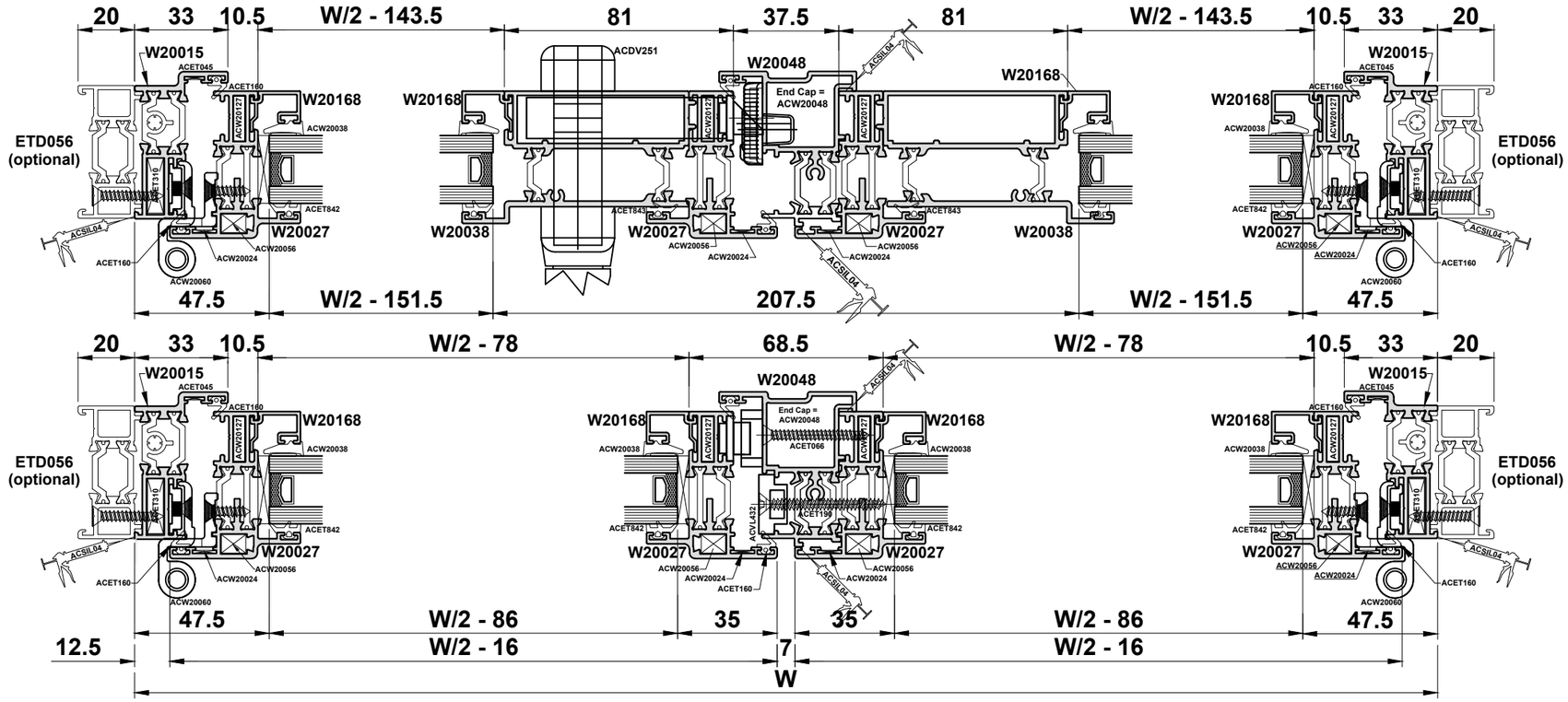

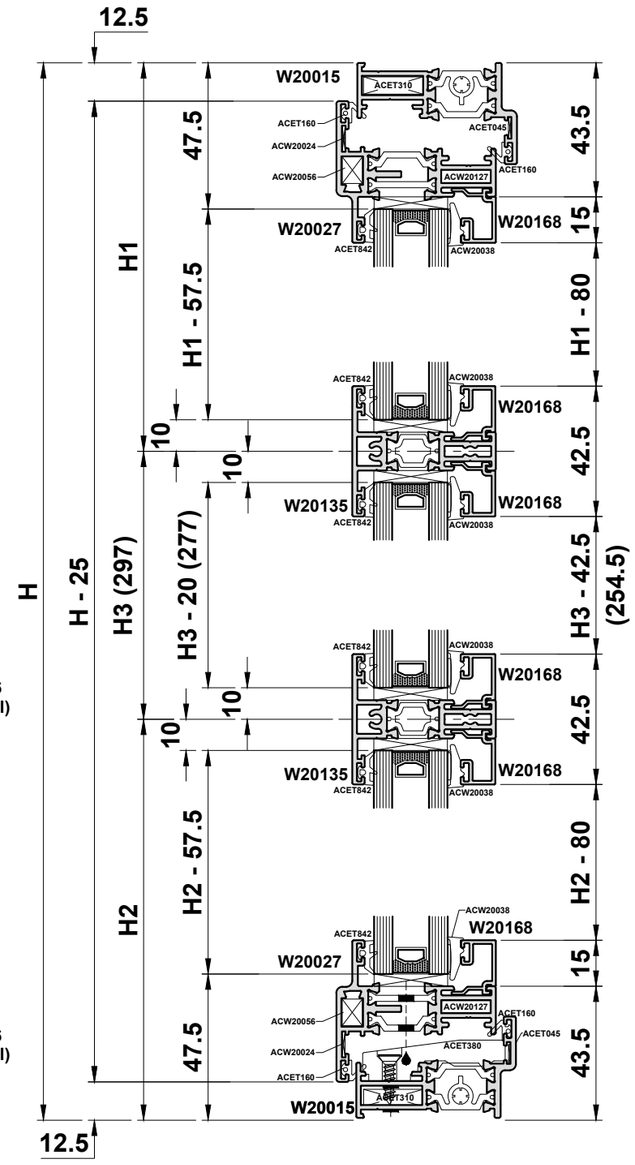

Do Not Scale From This Drawing

Cutting Information - Open In Single Door

Profiles

W20015	2	H
W20015	2	W
W20125	2	W - 25
W20125	2	H - 25
W20135	2	W - 90
W20038	1	285
W20168	4	W - 90
W20168	2	W - 152.5
W20168	2	H1 - 80
W20168	2	H2 - 80
W20168	2	H3 - 42.5
W20175	1	W - 36
PCX41	1	1xW & 2xH

Glass

G1	1 x	W - 98 x H1 - 59
G2	1 x	W - 98 x H2 - 59
G3	1 x	W - 163.5 x H3 - 20

Accessories

ACET045	Chevrons	4	ACET067	S/S CSK S/T Screw	15
ACET066	Transom/Mullion Screw	6	ACET390	Polyamide Screw	8
ACET160	Vent Frame Seal	2 x (W-25) + 2 x (H-25)	ACW20058	Cylinder	1
ACET310	Outer Frame Cleats	4	ACW20061	Door Handle	1 Pair
ACET380	Run-Out Block	2			
ACET842	E Gasket	6x(W-95) + 2x(H-95)			
ACGSL045	Drainage Cap	2			
ACVS033	Outer Frame Seal	2 x (W-60) + 2 x (H-60)			
ACW20024	Chevrons	4			
ACW20038	Wedge Gasket	6x(W-95) + 2x(H-95)			
ACW20056	Vent Frame Cleats	4			
ACW20060	Hinges	4			
ACW20065	Multi-Point Lock	1			
ACW20067	Roller Keeps	4			
ACW20125	Vent Frame Cleats	4			
ACW20126	Vent Frame Cleats	8			
ACW20162	Open In Hinge Adaptor	4			
ACW20166L/R	Centre Keep	1			

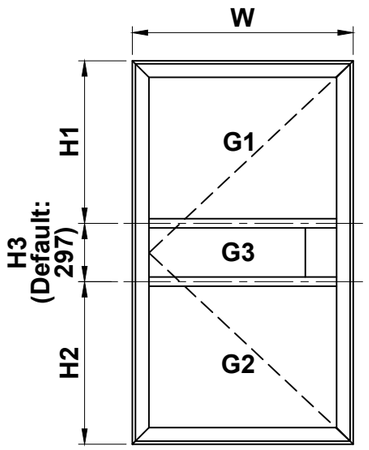

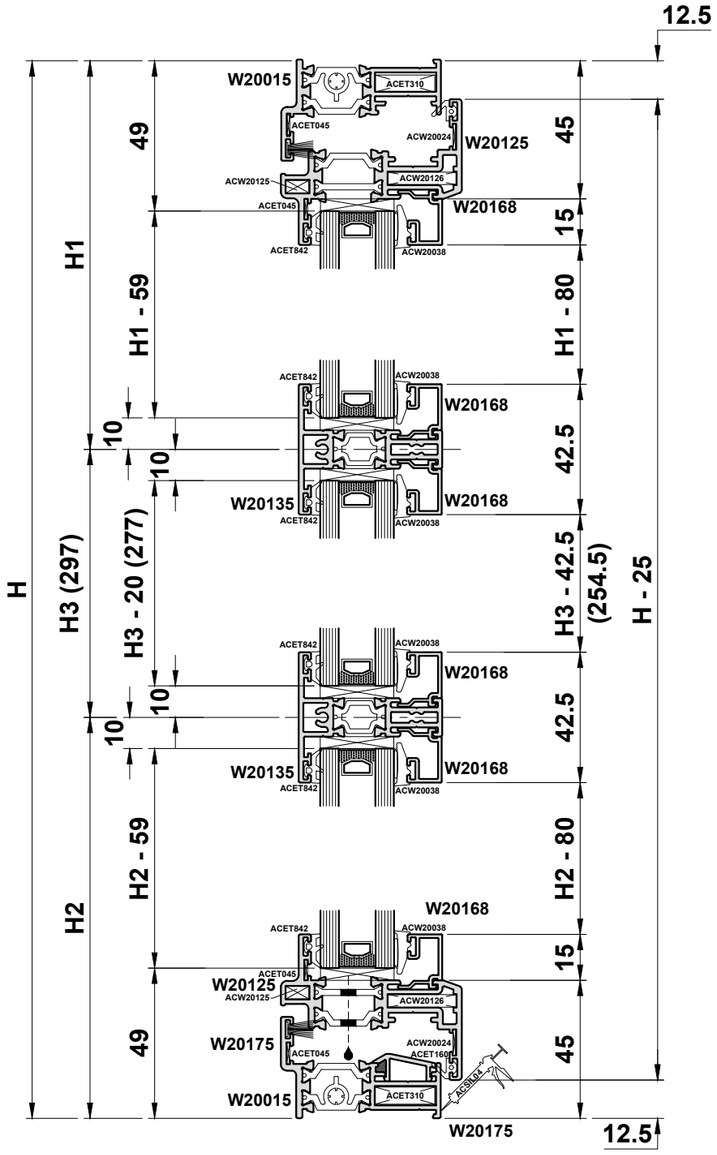

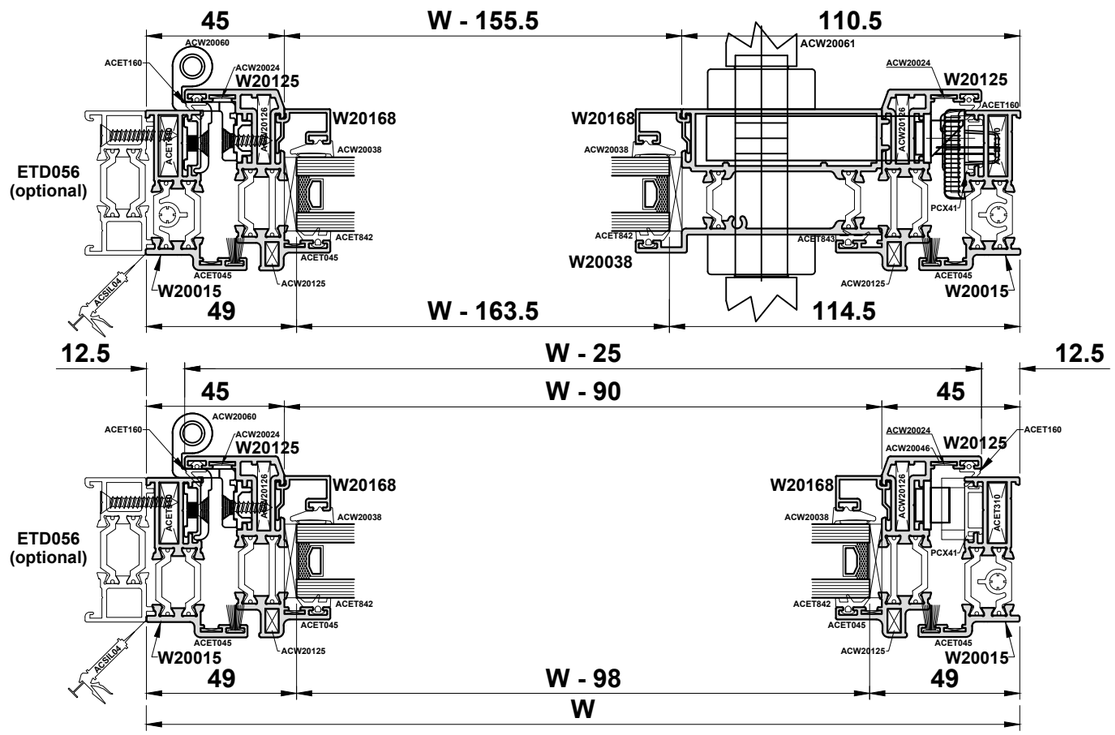

Do Not Scale From This Drawing

Cutting Information - Open In Double Door

Profiles

W20015	2		H
W20015	2		W
W20125	4		W/2 - 16.5
W20125	4		H - 25
W20135	4		W/2 - 81.5
W20038	2		285
W20148	1		H - 63
W20168	8		W/2 - 81.5
W20168	4		W/2 - 147
W20168	4		H1 - 80
W20168	4		H2 - 80
W20168	4		H3 - 40.5
W20175	1		W - 36
PCX41	1		1xW & 3xH

Glass

G1	2 x	W/2 - 89.5 x H1 - 59
G2	2 x	W/2 - 89.5 x H2 - 59
G3	2 x	W/2 - 154 x H3 - 20

Accessories

ACET045	Chevrons	12	ACET067	S/S CSK S/T Screw	15
ACET066	Transom/Mullion Screw	20	ACET390	Polyamide Screw	8
ACET160	Vent Frame Seal	4 x(W/2-16) + 3 x(H-25)	ACW20058	Cylinder	1
ACET310	Outer Frame Cleats	4	ACW20061	Door Handle	1 Pair
ACET380	Run-Up Block	4			
ACET842	E Gasket	12x(W/2-85) + 4x(H-95)			
ACGSL045	Drainage Caps	4			
ACVL432	Shootbolt	2			
ACVS033	Outer Frame Seal	2 x (W-60) + 3 x (H-60)			
ACW20024	Chevrons	8			
ACW20038	Wedge Gasket	12x(W/2-85) + 4x(H-95)			
ACW20164	Hinges	8			
ACW20065	Multi-Point Lock	1			
ACW20067	Roller Keeps	4			
ACW20125	Vent Frame Cleats	8			
ACW20126	Vent Frame Cleats	4			
ACW20148	W20148 End Cap	1 Pair			
ACW20166L/R	Centre Keep	1			
ACW20432	Shoot Bolt Keeps	2			

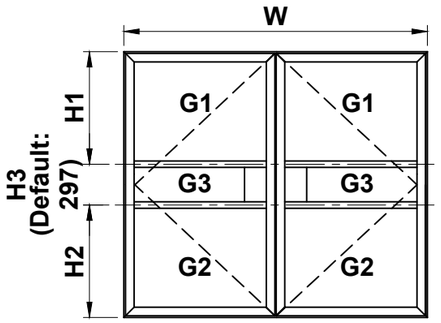

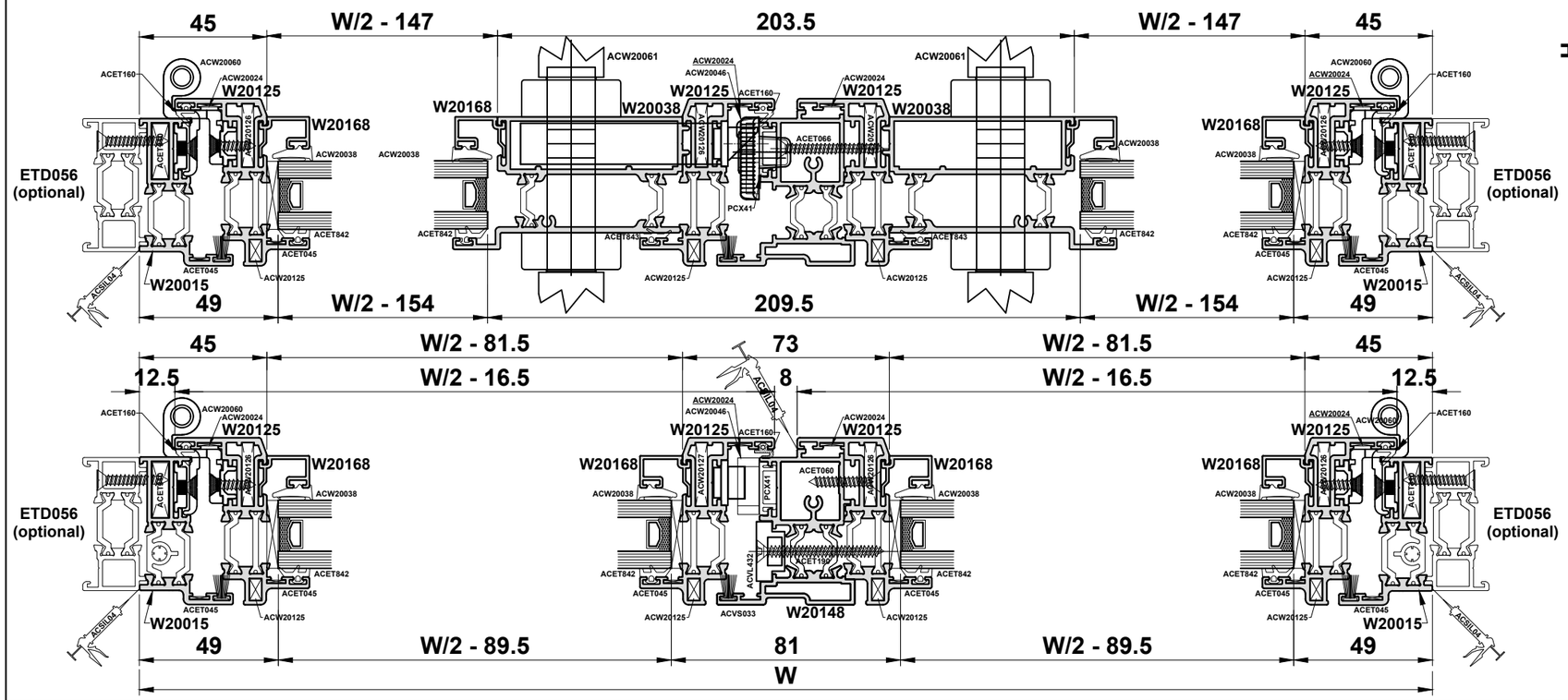

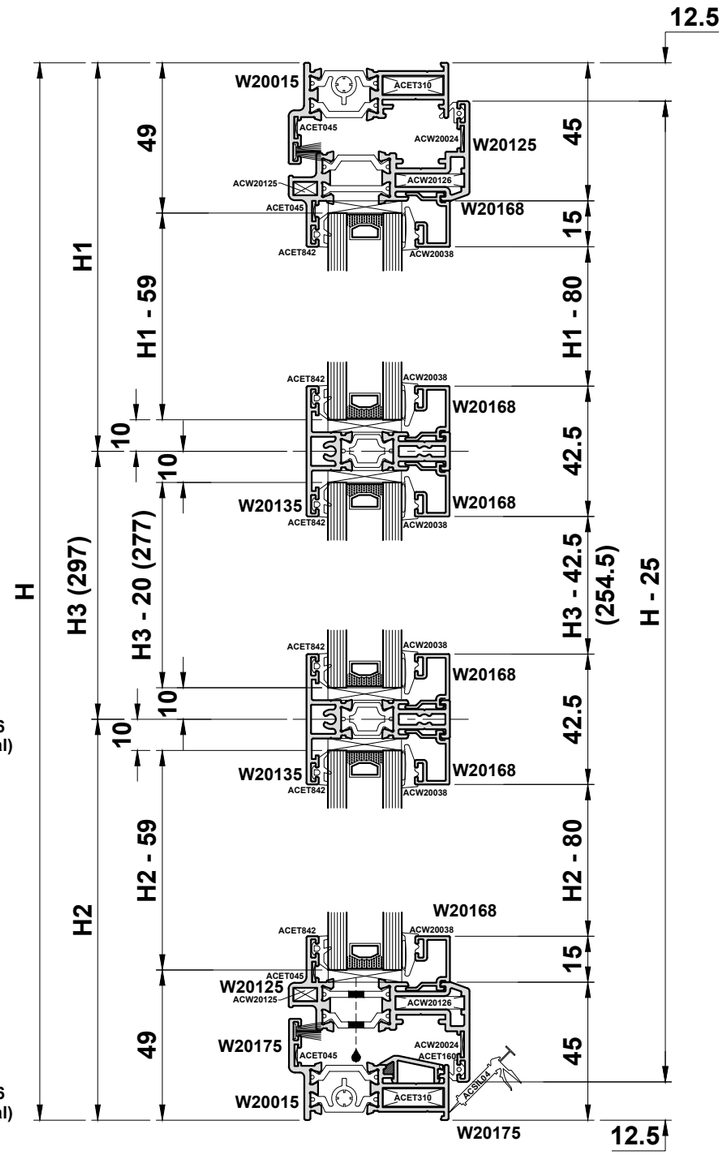

Do Not Scale From This Drawing