Main Index

W Index

Index ..... Page A01 - A02

A EF

Profiles

Specification Pages ..... Page A03 - A10
Technical Information ..... Page A11 - A26
Scale Profile Drawings ..... Page A27 - A64

B EF

Accessories

Photos & Drawings ..... Page B03 - B69

C EF

Sections

Windows:

Fixed Lights..... Page C03 - C17
Tilt & Turn..... Page C18 - C30
Pivot..... Page C31 - C34
Casement..... Page C35 - C45

Doors:

Flat - Open Out..... Page C47 - C55
Flat - Open In..... Page C56 - C67
Stepped - Open Out..... Page C68 - C76
Stepped - Open In..... Page C77 - C85

D EF

Statics

..... Page D02 - D04

E EF

Construction Drawings

Window:

Corner Joint Details..... Page E03 - E06
Mullion/Transom Details..... Page E07 - E09
Tilt & Turn — Size Limitations..... Page E10
Tilt & Turn — Handle Preparation & Drainage..... Page E11 - E12
Tilt & Turn — EF045 & ACEF055 Preparation..... Page E13
Pivot — Overview..... Page E14
Pivot — EF045 Preparation..... Page E15
Pivot — ACVL093..... Page E16
Pivot — ACVL090/91 Hinge Details..... Page E17
Casement — Mullion / Transom Preparation..... Page E18
Casement — Drainage ..... Page E19 - E20
Casement — Angled Sub Cill ..... Page E21
Casement — Friction Hinge Fixing..... Page E22
Casement — Locking..... Page E23 - E24
Casement — Hinge Protectors/Pull In Blocks..... Page E25
Example Layout..... Page E26
Bay Pole Deductions..... Page E27
Glazing ..... Page E65 - E68

Main Index

E EF

Construction Drawings
Doors:

Flat Door	Joint Details	Page E28 - E31
	Ventilation/Drainage	Page E32
	Hinge Details	Page E33
	Open In Lock Details	Page E34 - E36
	Open Out Lock Details	Page E37 - E39
	ACEF891 Finger Bolt Preparation	Page E40 - E41
	Double Door Without Threshold	Page E42
	ACGT430 Preparation	Page E43
	Panic Bar	Page E44 - E47
	PAS24:2012 Overview	Page E48
Stepped Door	Joint Details	Page E49
	Ventilation/Drainage	Page E50
	Hinge Details	Page E51 - E53
	Open In Lock Details	Page E54 - E56
	Open Out Lock Details	Page E57 - E59
	EF952 & EF953 Double Door Detail	Page E60
	ACVL432 Shoot Bolt	Page E61
	ACGT430 Preparation	Page E62 - E63
	PAS24:2012 Overview	Page E64
Glazing		Page E65 - E68
Example Layout		Page E69 - E70
Smoke Vent		Page E71 - E72

F EF

Sawing Tables

Cutting Information	Page F01 - F17

Updates

DATE	PAGE	DESCRIPTION
MAY 2017	E04	**Crimping Details**
	A06 - A08	**Updated Kitemark Information** **New Sections added:** EF021 - Sash / Vent EF022 - Sash / Vent EF966 - Square Bead EF967 - Square Bead
NOV 2017	ALL PAGES	**Updated PAS24 Details** **New Sections / Accessories added:** EF434 - Transom EF932 - Open Out Transom / Mullion EF992 - Woolpile Carrier EF993 - Low Threshold EF994 - Low Threshold Rebate EF995 - Low Threshold Adaptor Various Square Beads Various Sloped Beads Various High Security Beads Various Accessories

Specification

GENERAL DESCRIPTION

Eco Futural is a versatile commercial system providing various window and door solutions, including:

- Tilt & turn windows
- Pivot windows
- Open out casement windows
- Flat open in/open out single/double doors
- Stepped open in/open out single/double residential doors.

By using the correct glass/spacer bar configurations, Eco Futural can achieve and exceed the current Approved Document L requirements.

Important Note: Corner assembly of Eco Futural is by PNEUMATIC CRIMPER ONLY. Only EF010, 011, 110, 020, 021, 910, 926, 945 and 946 may be manually crimped. See page E04 for details.

Due to the varied range of pneumatic crimpers available, Smarts Systems cannot provide the crimping knives. Please consult your crimper manufacturer or call The Technical Department for more information.

PROFILE SPECIFICATION

The window frame are constructed of aluminium alloy extrusion to BS EN 755-9 and BS EN 12020, extruded from 6063 T6 alloy. The internal and external extrusions are separated with a polyamide thermal break.

The external aluminium alloy extrusion is pre-treated and finished either:-

a) Anodised to BS 3987: 1987, grade AA25 to a natural self colour.

b) Polyester powder organic coating to BS 6496. Dual colour is available.

GENERAL MANUFACTURING

Outer and vent frames are made by cutting the frame profiles with accurate 45° mitred ends using Tungsten Carbide Tipped Saw Blades, operating at approximately 3000 rpm.

The corners are joined using the Eco Futural crimping cleats to form a cold forged corner joint (made by deforming small slugs of metal into the groove of the corner cleat).

The ends of transoms and mullions are profiled to fit the frame and fixed using self-tapping screws with a small joint sealant.

On polyester powder coated finishes, great care should be taken to avoid getting gap sealer on visible surfaces and should be removed as soon as possible with a clean cloth.

Care should be exercised when using products not supplied by Smart Systems Ltd as no responsibility can be accepted.

Specification

SMART RECOMMENDED SASH DESIGN LIMITATIONS

Windows	Maximum Width (mm)	Minimum Width (mm)	Maximum Height (mm)	Minimum Height (mm)	Maximum Weight (kg)
Tilt & Turn [d]	1700 [a] [c]	402 [e]	2400 [b] [c]	500	90
Horizontal Pivot	2400	500	2000	700 [d]	180
Vertical Pivot	2000	700 [f]	2400	500	120
Top Hung Casement [g]	1440	250	2500	240	180
Side Hung Casement [g]	1000 [i]	320	1440	250	55
Doors					
Flat Door Residential	1200	500	2500	-	160
Flat Door Commercial	1200	500	2500	-	145 [h]
Stepped Door Residential	1200	500	2500	-	160
Stepped Door Commercial	1200	500	2500	-	145 [h]

Note: a) At 1700mm wide max height is 2100mm
b) At 2400mm high the max width is 1400mm
c) See page E10 for sash selection guide
d) For tilt-turn sashes, width must not exceed 1.5 x height
e) Based on Fapim gear
f) Can be 500mm if using cockspur handles
g) Based on hinge & lock selection
h) Maximum weight is reduced to 115kg when used with closer
i) Kitemark covers up to 840mm width

For advise on window sizes outside of the recommended design limitations, please contact the Technical Department at Smart Systems Ltd Tel: 01934 876100

Specification

Kitemark™ Certificate

No. KM 81580

Hardware - Eco Futural Aluminium Alloy System
Casement Windows*

Hardware Reference	Hardware Supplier	Fixing Specification	Fixing Supplier
Securistyle Defender Stays Nico Friction Hinges	Smart Systems	ACET070	Smart Systems
Securistyle Vector Hinge Protectors	Smart Systems	ACET066	Smart Systems
ERA Lock ACEF951-956	Smart Systems	Espagnolette & Keeps ACET066	Smart Systems
ACET081/ACET165 Key Locking Handles	Smart Systems	ACET069	Smart Systems
Run-Up Blocks 4 off Per Sash	*		

*Glass retention as specified for the fixed windows.

Tilt / Turn Windows*

Hardware Reference	Hardware Supplier	Fixing Specification	Fixing Supplier
Chrono Hinge Stays	Smart Systems	Integral Within Gearing	Smart Systems
Chrono Safe Tilt Turn Gearing	Smart Systems	Integral Within Gearing	Smart Systems
Tilt/Turn Key Locking Handles	Smart Systems	ACET069	Smart Systems
Run-Up Blocks 4 Off Per Sash	*		

*Glass retention as specified for the fixed windows.

Fixed Windows
Glass Retention: External: Glazing beads and Glaslok Securi-clip glazing clips
Internal: Glazing beads

Multilight Windows Comprising Opening Light(s) and / or Dummy Vent(s) or Fixed Light(s)
Hardware / Fixing Requirements Are As Specified For Opening, Dummy Vent And Fixed Window Types.

Specification

Kitemark™ Certificate

No. KM 81580

Size Limitations And Performance Characteristics
Eco Futural Aluminium Alloy Window System

Window Type	Width (mm) - Maximum	Height (mm) - Maximum	Area (m_2) - Maximum	Friction Stays (Up To & Incl.)	Transom / Mullion Length (mm) Inc. Frame - Maximum	Air Permeability Classification	Watertightness Classification	Resistance To Wind Classification	Exposure Category As Given In Table 1 Of BS6375-1:2009
Sash Dimensions For Windows With Approved Sash Profiles									
Projecting Top Hungs	1440	2500	-	24"	-	3	8A	A5	2000
Projecting Side Hungs	840	1440	-	16"	-	4	E1050	AE2400	2000+
Overall Dimensions For Windows With Approved Outer Frame Profiles									
Fixeds	2100	2100	4.2	-	-	3	E1050	AE	2000
Tilt / Turns	1600*	2400	-	-	-	4	E900	AE	2400
Overall Dimensions For Approved Outer Frames & Transom / Mullion Profiles									
Mulitilights ETC831 Transom / Mullion	2400	2100	3.1	-	1345	4	E1050	AE	2000

*Width Of The Tilt / Turn Sash Must Not Exceed 1½ Times The Height.

First Issued: 03/02/2005 Latest Issue: 18/05/2016

Specification

Kitemark™ Certificate

No. KM 530838

Eco Futural Aluminium Alloy Residential Door System

BS 4873:2009 / PAS 24:2012 - General and enhanced security performance requirements for door assemblies.

Profiles :

Outer Frame :	EF414/472/415/492/493
Leaf :	EF424/425
Midrail :	EF030/031/032/033/034/035/036

Hardware :

Locking :	ACSZ550/551/552
Shootbolt :	ACGT430 with rods ACVL127
Keep :	ACVL434
Hinges :	ACUN450
Handle :	ACFA120
Cylinder + Cover :	ACMX01613/ACMX208 & ACSZ400
Lock Keeps :	ACSZ650/651

Kitemark Size Limitations And Performance Characteristics

Door Type	Leaf Width (mm) - Maximum	Leaf Height (mm) - Maximum	Air Permeability Classification	Watertightness Classification	Resistance To Wind Classification	Exposure Category As Given In Table 1 Of BS6375-1:2009
Single Leaf	1000	2500	4	4A	A3	1200
Double Leaf Open In Low Theshold	1000	2500	3	4A	A3	1200
Double Leaf Open In Standard Theshold	1000	2500	4	6A	A3	1200
Double Leaf Open Out	1000	2500	4	8A	A3	1200

First Issued: 29/09/2008 Latest Issue: 18/05/2016

Specification

WINDOW DRAINAGE

As with all dry glazed systems, it is recommended that the window system is adequately drained and ventilated. Refer to drainage details in manual, if in doubt ask The Technical Department.

In order to get maximum performance and weather resistance it is recommended that drip bars are used over all opening vents/ fixed panels (dummys).

OUTER FRAME MANUFACTURING INFORMATION

The outer frame members are cut with 45° mitred ends to the overall size required, measured to the longest point of the metal.

Prior to corner crimping, the centre line position of any transoms or mullions should be marked on the outer frame members. Where the transom/mullion runs right through, it should be marked out on both jambs or head and cill members in pairs to ensure accurate alignment of the sections.

Using the marked centre line, drill the transom/mullion fixing holes using a 5mm dia. drill bit.

Corners are formed by coating the cut faces to be joined with a suitable small gap sealer ACSIL04. Into the mitred corner insert the cleat glue ACSIL013 and the required corner cleats and, where required, the aluminium corner chevrons. The two mitred ends are then brought together and crimped. The small gap sealer ensures a permanent joint and guards against the ingress of moisture and joint movement. After crimping the corner joint, special care should be taken to ensure any excess sealer is removed from painted surfaces.

Transoms or mullions are cut with square ends to the sizes calculated on the cutting formula sheets. The ends are then profiled to allow them to fit into the outer frame. Special tooling is available on request to profile the end of transom/mullion.

Prior to fixing of transoms and mullions smear the cut ends with a suitable small gap sealer ACSIL04. After fixing, special care should be taken to ensure any excess is cleared from painted surfaces.

VENT

Corners are formed by coating the cut faces to be joined with a suitable gap sealer ACSIL04. In the mitred corner insert the cleat glue ACSIL013 and the required corner cleats and chevrons. The mitred ends are then brought together and crimped. The small gap sealer ensures a permanent joint and guards against the ingress of moisture and joint movement. Care should be taken to ensure any excess sealer is removed from the surfaces.

The cutting sizes produce vent frames with a cavity of 17mm.

When fixing, the friction stays into both the outer and vent frame, care should be taken to ensure that holes are located on 'V' grooves in the aluminium extrusions.

Specification

INTERNALLY BEADED ADAPTOR FRAME

The internally beaded adaptor frame members are cut with 45° mitred ends to the overall size required, measured to the longest point of metal. Care should be taken when measuring and cutting the frame members as only nominal clearance is required when the assembled frame is fixed in the outer frame.

Corners are formed by coating the cut faces to be joined with a suitable small gap sealer ACSIL04. Into the mitred corner insert the cleat glue ACSIL013 and a corner cleat and the required corner chevrons. The small gap sealer ensures a permanent joint and guards against the ingress of moisture and joint movements. Care should be taken to ensure any excess sealer is removed from painted surfaces.

GLAZING

All beads are cut to suit the glazing aperture on the fully assembled window for glazing either at factory or on site as required.

EXTERNALLY BEADED GLAZING

Glazing beads are fitted to openings by cutting the horizontal beads square to head and cill of each vent and fixed light area. Vertical beads are cut at 45° or 90° both ends. When using external glazing bead EF960, slide retained gasket ACET835 into section and ensure it is not stretched. Insert bottom beads and two setting blocks to ensure glass will be centralized in vertical dimension of opening (glazing blocks must be full width of cavity to fully support glass or sealed unit), then insert top bead followed by side beads. Finish glazing by insertion of internal gaskets all round.

N.B. It may be necessary to insert glazing beads after toeing and heeling tilt turn, side hung or door sashes.

INTERNALLY BEADED GLAZING

Glazing beads are fitted to openings by cutting the horizontal beads square to head and cill of each vent and fixed light area. Vertical beads are cut square at both ends. Insert bottom beads and two setting blocks to ensure glass will be centralized in vertical dimension of opening (glazing blocks must be full width of cavity to fully support glass or sealed unit), then insert top bead followed by side beads. Finish glazing by insertion of internal gaskets all round.
See note above with regard to 'toeing and heeling'.

Eco Futural Window U Values

There are three levels of insulation within Eco Futural:
EF = No Foam
EF+ = Foam Insulation in Glazing Cavity
EFi+ = Foam Insulation in Glazing Cavity & in Polyamide Cavity.

Please refer to the Smart Systems' Document L White Paper for more information or contact the Technical Department.

Number	Picture	Page	Perim. mm	Mec. mm	Ix(cm4) wx(cm3)	Iy(cm4) wy(cm3)	Length	Pack pr.	MF	SA	KL	HP	M
EF010	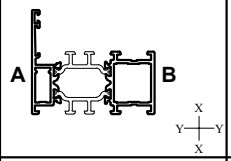	A27	434.2	92.9	25.1 — 7.1	6.95 — 1.95	6.5	1	✓	✓	✓	✓	✓
EF011	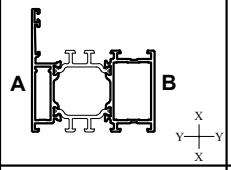	A27	452.5	112.9	29.52 — 8.4	12.53 — 3.1	6.5	1	✓	✓	✓	✓	✓
EF012	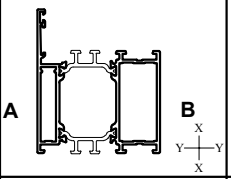	A28	458.1	134.9	21.51 — 4.67	34.14 — 11.61	6.5	1	✓	✓	✓	✓	✓
EF019	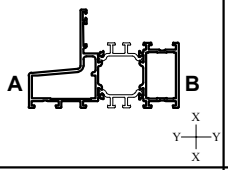	A28	542.4	187.1	62.97 — 12.3	15.24 — 3.5	6.5	1	✓	✓	✓	✓	✓
EF020	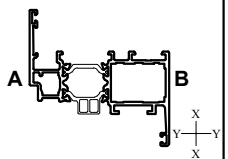	A29	466.2	112.9	38.28 — 9.7	10.42 — 2.9	6.5	1	✓	✓	✓	✓	✓
EF021	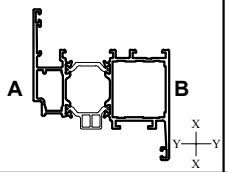	A29	481.43	137.7	17.93 — 4.28	44.01 — 12.10	6.5	1	✓	✓	✓	✓	✓
EF022	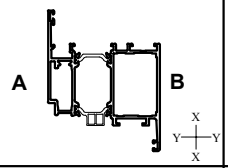	A30	500.1	153.3	52.31 — 12.6	29.85 — 6.1	6.5	1	✓	✓	✓	✓	✓
EF023	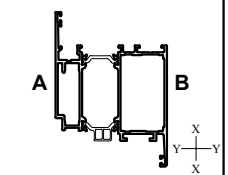	A30	519.9	171.2	55.26 — 14.6	42.41 — 8.3	6.5	1	✓	✓	✓	✓	✓
EF030	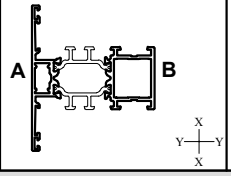	A31	497.6	118.7	28.32 — 7.44	10.93 — 2.84	6.5	1	✓	✓	✓	✓	✓

A = Outside
B = Inside

MF = Mill Finish
SA = Silver Anodised
KL = Basic Colour
HP = Special Colour
M = Dual Colour

Number	Picture	Page	Perim. mm	Mec. mm	Ix(cm4) wx(cm3)	Iy(cm4) wy(cm3)	Length	Pack pr.	MF	SA	KL	HP	M
EF031	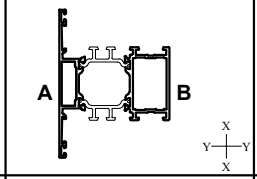	A31	516.4	138.7	32.15 --- 8.64	14.81 --- 4.09	6.5	1	✓	✓	✓	✓	✓
EF032	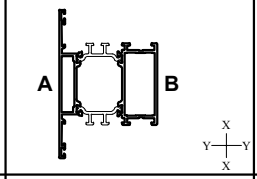	A32	539	160.7	36.67 --- 9.95	28.45 --- 5.81	6.5	1	✓	✓	✓	✓	✓
EF033	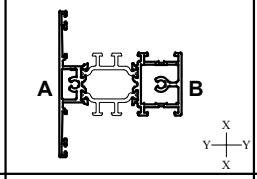	A32	500.8	118.7	32.24 --- 8.72	10.9 --- 2.83	6.5	1	✓	✓	✓	✓	✓
EF034	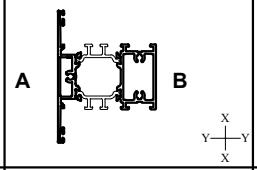	A33	520.8	138.7	36.39 --- 9.88	18.51 --- 4.25	6.5	1	✓	✓	✓	✓	✓
EF035	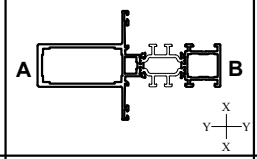	A33	596.2	219	103.36 --- 15.95	12.79 --- 3.55	6.5	1	✓	✓	✓	✓	✓
EF036	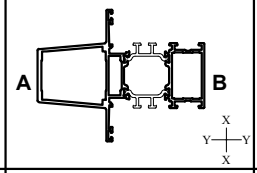	A34	598.3	220.6	95.69 --- 17.21	25.44 --- 5.85	6.5	1	✓	✓	✓	✓	✓
EF040	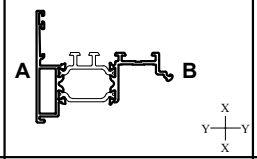	A34	399.2	85.24	19.98 --- 4.21	5.91 --- 1.77	6.5	1	✓	✓	✓	✓	✓
EF044	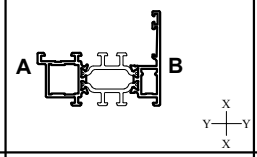	A36	411.5	60.93	19.61 --- 5.24	4.6 --- 1.42	6.5	1	✓	✓	✓	✓	✓
EF045	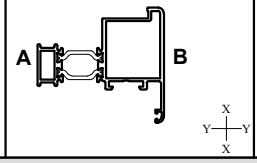	A36	334.6	121.1	22.64 --- 5.63	8.74 --- 2.61	6.5	1	✓	✓	✓	✓	✓

A = Outside
B = Inside

MF = Mill Finish
SA = Silver Anodised
KL = Basic Colour
HP = Special Colour
M = Dual Colour

Number	Picture	Page	Perim. mm	Mec. mm	Ix(cm4) wx(cm3)	Iy(cm4) wy(cm3)	Length	Pack pr.	MF	SA	KL	HP	M
EF094	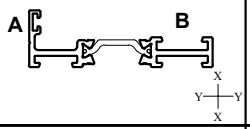	A37	248.5	35.43	0.39 — 0.28	1.15 — 0.39	6.5	1	✓	✓	✓	✓	✓
EF095	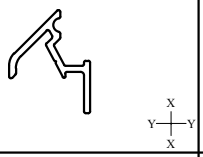	A37	125.9	81.14	- — -	- — -	6.5	1	✓	✓	✓	✓	
EF110	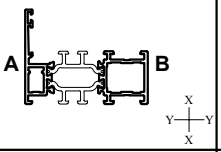	A27	422.1	82.93	22.67 — 6.42	4.96 — 1.5	6.5	1	✓	✓	✓	✓	✓
EF120	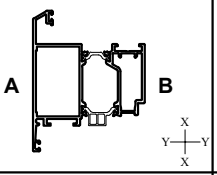	A38	480.9	158.4	48.56 — 11.27	34.45 — 7.38	6.5	1	✓	✓	✓	✓	✓
EF130	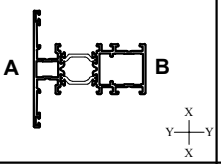	A39	510.2	118.71	39.29 — 9.09	12.57 — 3.26	6.5	1	✓	✓	✓	✓	✓
EF131	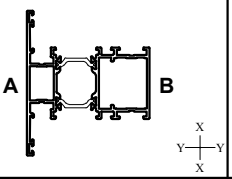	A39	529.6	138.71	44.43 — 10.35	20.99 — 4.83	6.5	1	✓	✓	✓	✓	✓
EF414	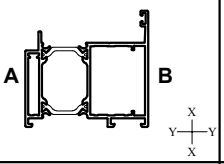	A40	348.4	124.8	28.67 — 8.72	13.76 — 3.78	7	1	✓	✓	✓	✓	✓
EF415	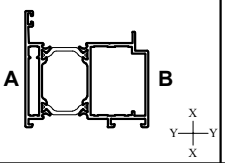	A40	348.4	124.8	28.22 — 7.81	13.84 — 3.82	7	1	✓	✓	✓	✓	✓
EF424	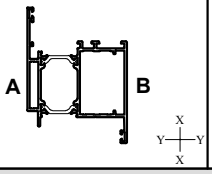	A41	450.2	160.6	34.49 — 9.98	24.37 — 5.21	7	1	✓	✓	✓	✓	✓

A = Outside
B = Inside

MF = Mill Finish
SA = Silver Anodised
KL = Basic Colour
HP = Special Colour
M = Dual Colour

Number	Picture	Page	Perim. mm	Mec. mm	Ix(cm4) wx(cm3)	Iy(cm4) wy(cm3)	Length	Pack pr.	MF	SA	KL	HP	M
EF425	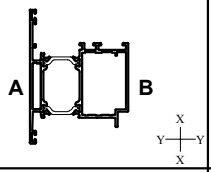	A41	458.2	160.6	33.16 —— 8.74	24.3 —— 5.2	7	1	✓	✓	✓	✓	✓
EF434	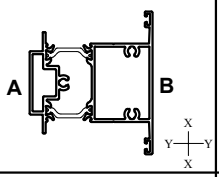	A35	354.9	177	32.18 —— 9.33	17.49 —— 4.64	6.5	1	✓	✓	✓	✓	✓
EF455	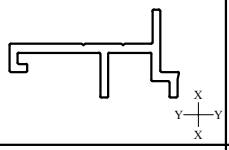	A42	115.2	53.52	- —— -	- —— -	7	1	✓	✓	✓	✓	
EF472	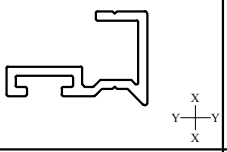	A43	89.15	13.02	- —— -	- —— -	6.5	1	✓	✓	✓	✓	
EF473	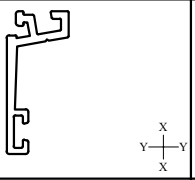	A43	104.7	22.57	- —— -	- —— -	6.5	1	✓	✓	✓	✓	
EF474	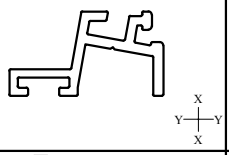	A43	109.1	9.71	- —— -	- —— -	6.5	1	✓	✓	✓	✓	
EF475	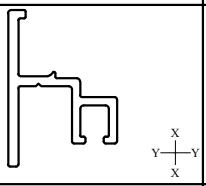	A43	202.7	27	- —— -	- —— -	6.5	1	✓	✓	✓	✓	
EF476	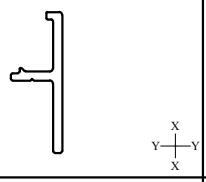	A43	128.3	23.4	- —— -	- —— -	6.5	1	✓	✓	✓	✓	
EF492	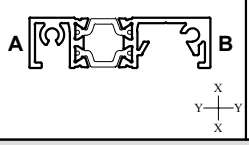	A42	276.1	67.63	0.76 —— 0.87	9.13 —— 14.49	6.5	1	✓	✓	✓	✓	✓

A = Outside
B = Inside

MF = Mill Finish
SA = Silver Anodised
KL = Basic Colour
HP = Special Colour
M = Dual Colour

Number	Picture	Page	Perim. mm	Mec. mm	Ix(cm4) wx(cm3)	Iy(cm4) wy(cm3)	Length	Pack pr.	MF	SA	KL	HP	M
EF493	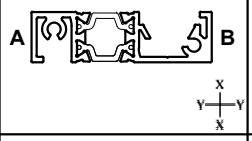	A42	276.1	67.63	0.88 — 1.07	9.30 — 3.68	6.5	1	✓	✓	✓	✓	✓
EF558	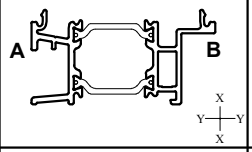	A44	290.8	118.85	4.45 — 2.63	15.48 — 5.18	6.5	1	✓	✓	✓	✓	✓
EF657	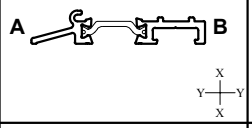	A44	202.2	36.9	7.84 — 2.2	0.17 — 0.23	6.5	1	✓	✓	✓	✓	✓
EF910	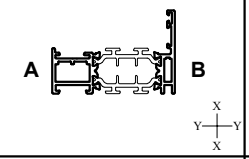	A45	343.5	177.9	22.19 — 6.3	3.53 — 2.4	6.5	1	✓	✓	✓	✓	✓
EF917	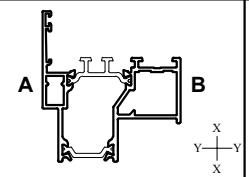	A46	378.8	117.5	18.20 — 4.47	25.77 — 9.44	6.5	1	✓	✓	✓	✓	✓
EF918	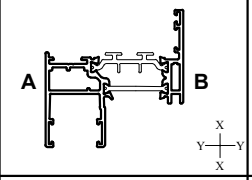	A46	389.7	98	8.09 — 2.37	26.29 — 8.35	6.5	1	✓	✓	✓	✓	✓
EF926	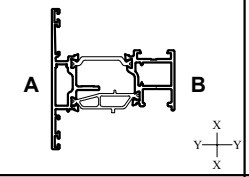	A47	442	115	29.14 — 7.47	10.39 — 2.83	6.5	1	✓	✓	✓	✓	✓
EF930	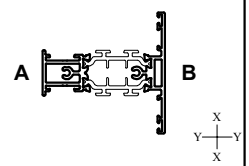	A47	389	97	26.6 — 6.93	6.11 — 1.91	6.5	1	✓	✓	✓	✓	✓
EF932	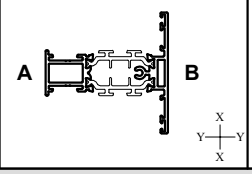	A47	389	97	25.0 — 6.26	6.10 — 1.91	6.5	1	✓	✓	✓	✓	✓

A = Outside
B = Inside

MF = Mill Finish
SA = Silver Anodised
KL = Basic Colour
HP = Special Colour
M = Dual Colour

Number	Picture	Page	Perim. mm	Mec. mm	Ix(cm4) wx(cm3)	Iy(cm4) wy(cm3)	Length	Pack pr.	MF	SA	KL	HP	M
EF945	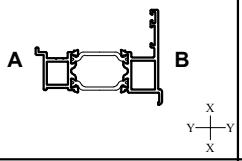	A48	311	115	19.17 — 4.88	4.10 — 2.02	6.5	1	✓	✓	✓	✓	✓
EF946	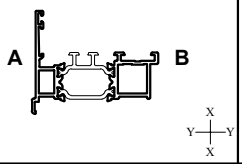	A48	334	68	20.95 — 5.53	4.91 — 2.28	6.5	1	✓	✓	✓	✓	✓
EF952	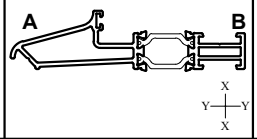	A49	331	65	37.78 — 7.41	1.36 — 1.45	6.5	1	✓	✓	✓	✓	✓
EF953	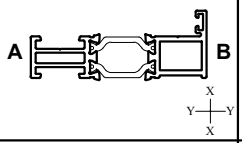	A49	260	45	15.15 — 4.38	1.01 — 1.08	6.5	1	✓	✓	✓	✓	✓
EF954	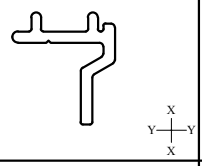	A49	64	15	- — -	- — -	5	1	✓	✓	✓	✓	
EF955	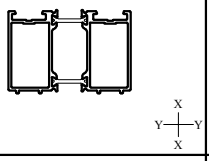	A50	356	85	21.38 — 6.62	10.65 — 5.02	6.5	1	✓	✓	✓	✓	✓
EF960	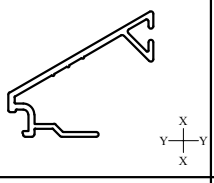	A50	143	38	- — -	- — -	6.5	1	✓	✓	✓	✓	
EF961	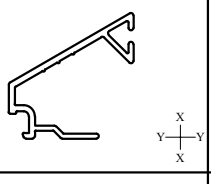	A50	139	35	- — -	- — -	6.5	1	✓	✓	✓	✓	
EF962	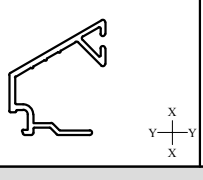	A50	134	33	- — -	- — -	6.5	1	✓	✓	✓	✓	

A = Outside
B = Inside

MF = Mill Finish
SA = Silver Anodised
KL = Basic Colour
HP = Special Colour
M = Dual Colour

Number	Picture	Page	Perim. mm	Mec. mm	Ix(cm4) wx(cm3)	Iy(cm4) wy(cm3)	Length	Pack pr.	MF	SA	KL	HP	M
EF966	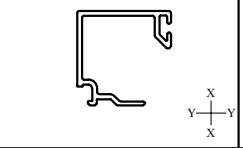	A50	161	55	- / — / -	- / — / -	6.5	1	✓	✓	✓	✓	
EF967	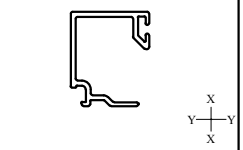	A50	153	52	- / — / -	- / — / -	6.5	1	✓	✓	✓	✓	
EF992	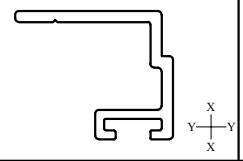	A51	102	14	0.27 / — / 0.27	0.24 / — / 0.37	6.5	1	✓	✓	✓	✓	
EF993	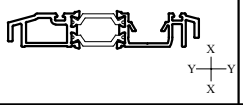	A51	308	59	0.84 / — / 1.01	26.48 / — / 6.35	6.5	1		✓			
EF994	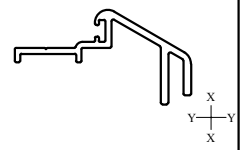	A51	182	71	- / — / -	- / — / -	6.5	1	✓	✓	✓	✓	
EF995	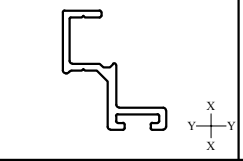	A51	99	46	- / — / -	- / — / -	6.5	1	✓	✓	✓	✓	
ETC090	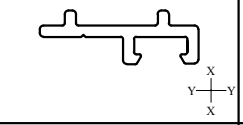	A60	68	40	- / — / -	- / — / -	5	1	✓	✓	✓	✓	
ETC451	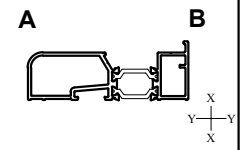	A52	271	180	32.44 / — / 7.29	3.46 / — / 2.79	6.5	1	✓	✓	✓	✓	✓
ETC452	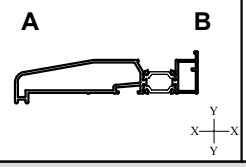	A52	414	382	122.46 / — / 18.03	6.01 / — / 3.34	6.5	1	✓	✓	✓	✓	✓

A = Outside
B = Inside

MF = Mill Finish
SA = Silver Anodised
KL = Basic Colour
HP = Special Colour
M = Dual Colour

Number	Picture	Page	Perim. mm	Mec. mm	Ix(cm4) wx(cm3)	Iy(cm4) wy(cm3)	Length	Pack pr.	MF	SA	KL	HP	M
ETC457	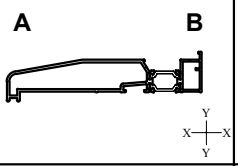	A52	444	412	163.27 — 21.60	6.79 — 3.73	6.5	1	✓	✓	✓	✓	✓
ETC458	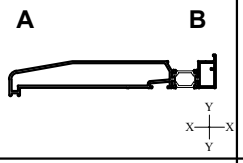	A53	524	492	313.62 — 32.63	8.87 — 4.79	6.5	1	✓	✓	✓	✓	✓
ETC477	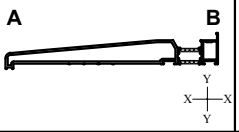	A53	752	408	1591.6 ----- 105.33	26.84 ----- 12.84	6.5	1	✓	✓	✓	✓	✓
ETC479	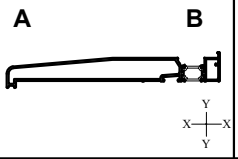	A53	594	559	501.64 — 44.04	9.72 — 5.34	6.5	1	✓	✓	✓	✓	✓
FT050	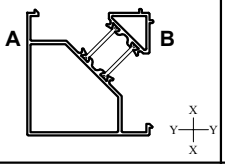	A54	368.1	129.8	28.24 — 8.32	28.29 — 8.32	6.5	1	✓	✓	✓	✓	✓
FT053	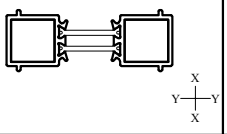	A55	213.3	41.14	15.25 — 4.69	1.67 — 1.39	6.5	1	✓	✓	✓	✓	✓
FT054	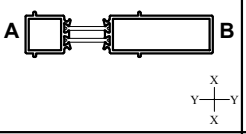	A55	281.3	95.6	43.3 — 8.58	2.65 — 2.2	6.5	1	✓	✓	✓	✓	✓
FT055	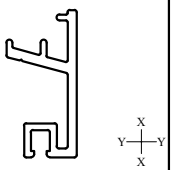	A54	151.9	33.1	- — -	- — -	6.5	1	✓	✓	✓	✓	
FT056	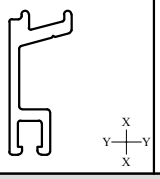	A54	98.1	24.5	- — -	- — -	6.5	1	✓	✓	✓	✓	

A = Outside
B = Inside

MF = Mill Finish
SA = Silver Anodised
KL = Basic Colour
HP = Special Colour
M = Dual Colour

Number	Picture	Page	Perim. mm	Mec. mm	Ix(cm4) wx(cm3)	Iy(cm4) wy(cm3)	Length	Pack pr.	MF	SA	KL	HP	M
FT057	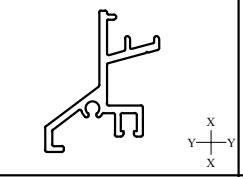	A54	193	44	- —- -	- — -	6.5	1	✓	✓	✓	✓	
FT151	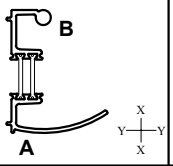	A56	331.5	80	22.53 — 6.58	6.12 — 1.59	6.5	1	✓	✓	✓	✓	✓
FT152	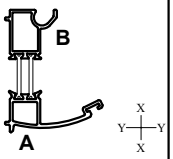	A56	309.6	63	16.49 — 4.42	6.07 — 1.77	6.5	1	✓	✓	✓	✓	✓
FT153	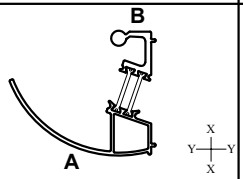	A56	390.4	119	24.64 — 7.14	22.60 — 4.23	6.5	1	✓	✓	✓	✓	✓
FT154	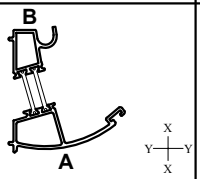	A56	330.2	75	17.91 — 4.66	10.46 — 2.58	6.5	1	✓	✓	✓	✓	✓
FT155	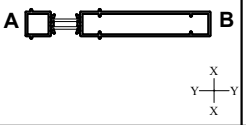	A55	383.5	217.9	135.1 — 17.7	4.16 — 3.46	6.5	1	✓	✓	✓	✓	✓
FT156	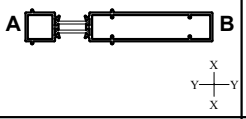	A55	343.5	177.9	91.3 — 13.85	3.59 — 2.99	6.5	1	✓	✓	✓	✓	✓
FT422	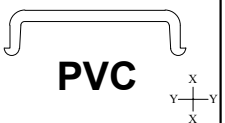	A57	64.8	-	- —- -	- — -	6.5	1	✓				
FT458	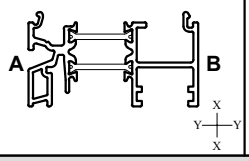	A57	411.7	83	24.77 — 6.74	3.72 — 1.87	6.5	1	✓	✓	✓	✓	✓

A = Outside
B = Inside

MF = Mill Finish
SA = Silver Anodised
KL = Basic Colour
HP = Special Colour
M = Dual Colour

Number	Picture	Page	Perim. mm	Mec. mm	Ix(cm4) wx(cm3)	Iy(cm4) wy(cm3)	Length	Pack pr.	MF	SA	KL	HP	M
FT557	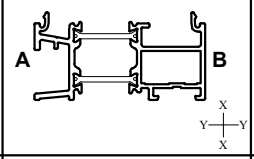	A57	332.2	93	18.425 — 5.54	3.36 — 1.88	6.5	1	✓	✓	✓	✓	✓
GL004	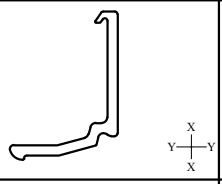	A58	88.6	24.6	- — -	- — -	6.5	1	✓	✓	✓	✓	
GL008	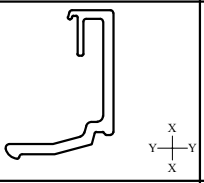	A58	109.4	29.4	- — -	- — -	6.5	1	✓	✓	✓	✓	
GL012	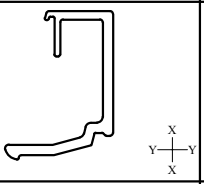	A58	117.4	33.4	- — -	- — -	6.5	1	✓	✓	✓	✓	
GL014	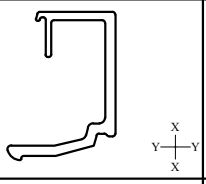	A58	121.3	35.4	- — -	- — -	6.5	1	✓	✓	✓	✓	
GL016	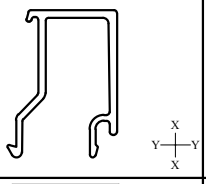	A58	146.7	37.3	- — -	- — -	6.5	1	✓	✓	✓	✓	
GL020	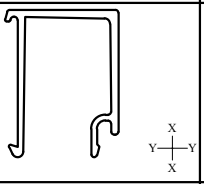	A58	151.7	41.6	- — -	- — -	6.5	1	✓	✓	✓	✓	
GL023	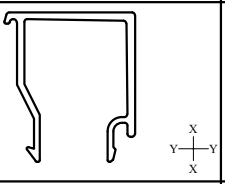	A58	160.2	44.3	- — -	- — -	6.5	1	✓	✓	✓	✓	
GL026	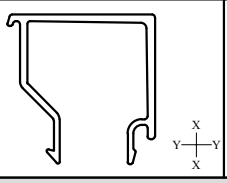	A58	169.2	47.3	- — -	- — -	6.5	1	✓	✓	✓	✓	

A = Outside
B = Inside

MF = Mill Finish
SA = Silver Anodised
KL = Basic Colour
HP = Special Colour
M = Dual Colour

Number	Picture	Page	Perim. mm	Mec. mm	Ix(cm4) wx(cm3)	Iy(cm4) wy(cm3)	Length	Pack pr.	MF	SA	KL	HP	M
GL028	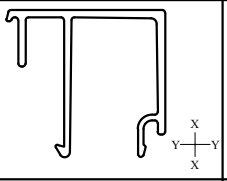	A58	183.8	49.2	- —— -	- — -	6.5	1	✓	✓	✓	✓	
GL030	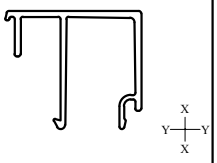	A58	187.8	51.2	- —— -	- — -	6.5	1	✓	✓	✓	✓	
GL034	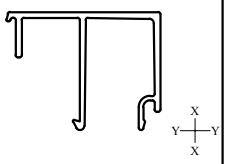	A58	195.8	55.3	- —— -	- — -	6.5	1	✓	✓	✓	✓	
GL037	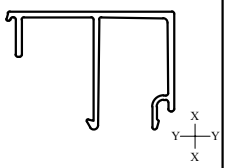	A58	201.8	58.3	- —— -	- — -	6.5	1	✓	✓	✓	✓	
GL039	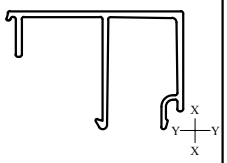	A58	205.8	60.3	- —— -	- — -	6.5	1	✓	✓	✓	✓	
GL041	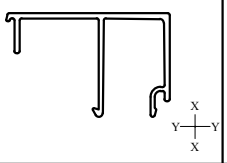	A58	209.8	62.3	- —— -	- — -	6.5	1	✓	✓	✓	✓	
GL045	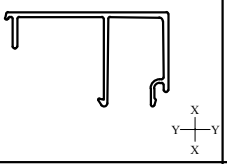	A59	217.8	65.3	- —— -	- — -	6.5	1	✓	✓	✓	✓	
GL048	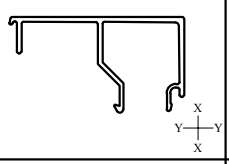	A59	229.9	68.3	- —— -	- — -	6.5	1	✓	✓	✓	✓	
GL117	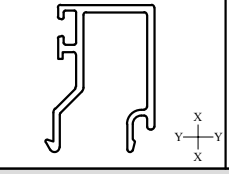	A59	161.9	38.6	- —— -	- — -	6.5	1	✓	✓	✓	✓	

A = Outside
B = Inside

MF = Mill Finish
SA = Silver Anodised
KL = Basic Colour
HP = Special Colour
M = Dual Colour

Number	Picture	Page	Perim. mm	Mec. mm	Ix(cm4) wx(cm3)	Iy(cm4) wy(cm3)	Length	Pack pr.	MF	SA	KL	HP	M
GL126	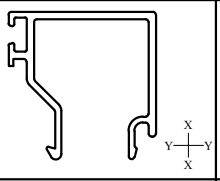	A59	180.7	47.6	- — -	- — -	6.5	1	✓	✓	✓	✓	
GL130	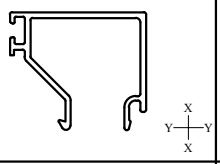	A59	191.8	51.6	- — -	- — -	6.5	1	✓	✓	✓	✓	
GL504	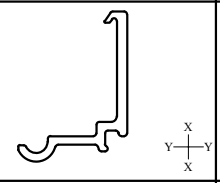	A59	96.2	24.6	- — -	- — -	6.5	1	✓	✓	✓	✓	
GL512	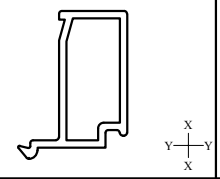	A59	90.5	33.6	- — -	- — -	6.5	1	✓	✓	✓	✓	
GL512N	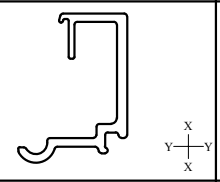	A59	124.1	33.4	- — -	- — -	6.5	1	✓	✓	✓	✓	
GL516	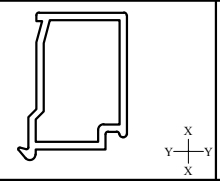	A59	90.1	37.6	- — -	- — -	6.5	1	✓	✓	✓	✓	
GL521	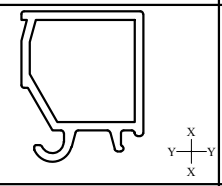	A59	109	43	- — -	- — -	6.5	1	✓	✓	✓	✓	
GL526	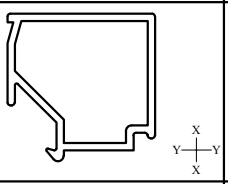	A59	111.2	47.6	- — -	- — -	6.5	1	✓	✓	✓	✓	
GL530	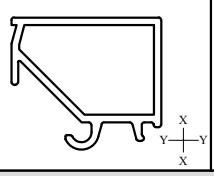	A59	131.2	51.6	- — -	- — -	6.5	1	✓	✓	✓	✓	

A = Outside
B = Inside

MF = Mill Finish
SA = Silver Anodised
KL = Basic Colour
HP = Special Colour
M = Dual Colour

Number	Picture	Page	Perim. mm	Mec. mm	Ix(cm4) wx(cm3)	Iy(cm4) wy(cm3)	Length	Pack pr.	MF	SA	KL	HP	M
GL534	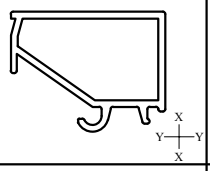	A59	137.3	55.6	- —— -	- — -	6.5	1	✓	✓	✓	✓	
UN150	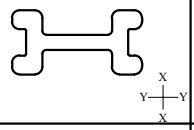	A60	64.9	65.5	- —— -	- — -	6.5	1	✓	✓	✓	✓	
UN381	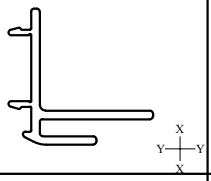	A60	126.2	14.62	- —— -	- — -	6.5	1	✓	✓	✓	✓	
UN500	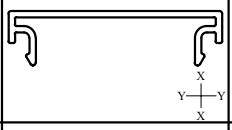	A61	137.3	-	- —— -	- — -	6.5	1	✓	✓	✓	✓	
UN501	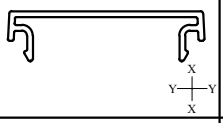	A61	135.9	45	- —— -	- — -	6.5	1	✓	✓	✓	✓	
UN510	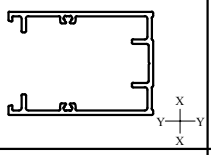	A61	374.5	113	12.2 — 3.8	9.5 — 4.8	6.5	1	✓	✓	✓	✓	
UN511	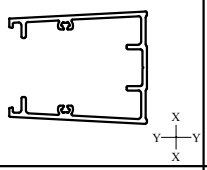	A61	394.4	113.1	12.9 — 4.0	11.6 — 5.1	6.5	1	✓	✓	✓	✓	
UTL080	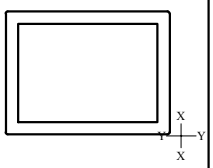	A61	139.2	139.2	8.2 — 4.1	5.1 — 3.4	6.5	1	✓				
VL59	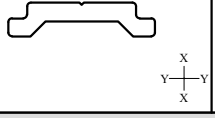	A62	48	-	- —— -	- — -	6	1		✓			

A = Outside
B = Inside

MF = Mill Finish
SA = Silver Anodised
KL = Basic Colour
HP = Special Colour
M = Dual Colour

Number	Picture	Page	Perim. mm	Mec. mm	Ix(cm4) wx(cm3)	Iy(cm4) wy(cm3)	Length	Pack pr.	MF	SA	KL	HP	M
VL60	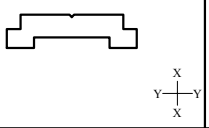	A62	46	-	- — -	- — -	6	1		✓		✓	
VL72	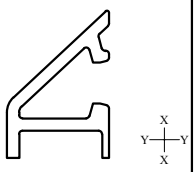	A62	99.5	30.6	- — -	- — -	6.5	1	✓	✓	✓	✓	
VL75	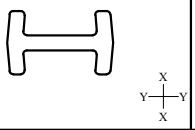	A62	54	54	- — -	- — -	6.5	1	✓				
VL479	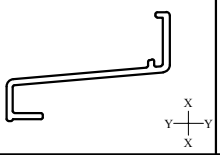	A63	162.9	83.0	- — -	- — -	6.5	1	✓	✓	✓	✓	
VL480	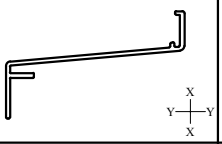	A63	251.6	115.0	- — -	- — -	6.5	1	✓	✓	✓	✓	
VL481	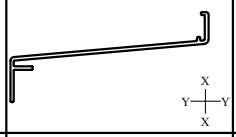	A63	311.8	147.0	- — -	- — -	6.5	1	✓	✓	✓	✓	
VL482	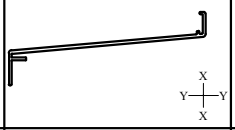	A63	365.3	180.1	- — -	- — -	6.5	1	✓	✓	✓	✓	
VL483	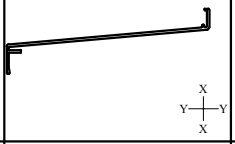	A63	425.5	209.7	- — -	- — -	6.5	1	✓	✓	✓	✓	
VL484	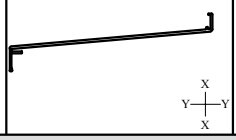	A63	493.4	243.0	- — -	- — -	6.5	1	✓	✓	✓	✓	

A = Outside B = Inside	MF = Mill Finish SA = Silver Anodised KL = Basic Colour HP = Special Colour M = Dual Colour

Number	Picture	Page	Perim. mm	Mec. mm	Ix(cm4) wx(cm3)	Iy(cm4) wy(cm3)	Length	Pack pr.	MF	SA	KL	HP	M
VL486	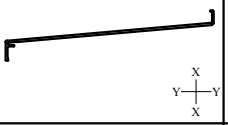	A63	600.5	300.5	- --- -	- — -	6.5	1	✓	✓	✓	✓	
VR023A	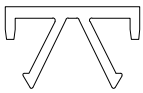 PVC	A62	89	-	- --- -	- — -	6.5	1	✓				

A = Outside
B = Inside

MF = Mill Finish
SA = Silver Anodised
KL = Basic Colour
HP = Special Colour
M = Dual Colour

This page is intentionally left blank

Primary Visible Side - Secondary Visible Side — · — · — · — · — · — · — · —

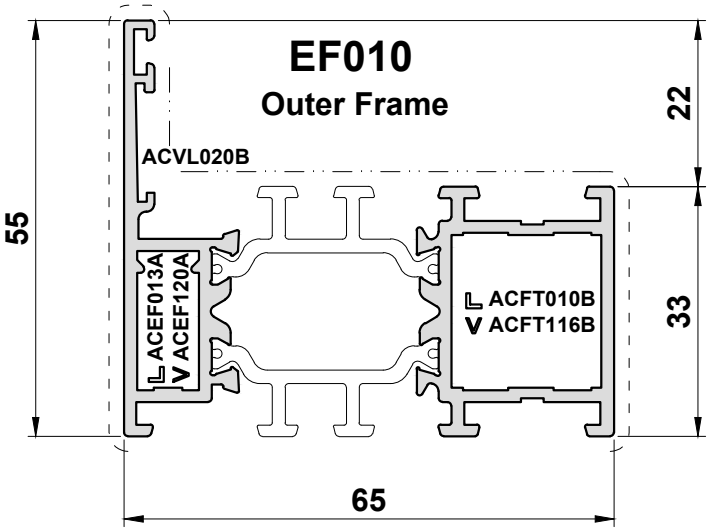

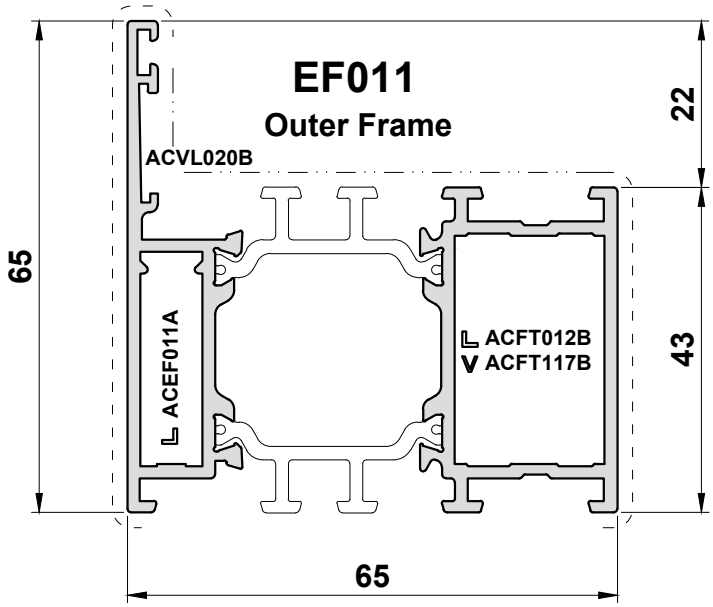

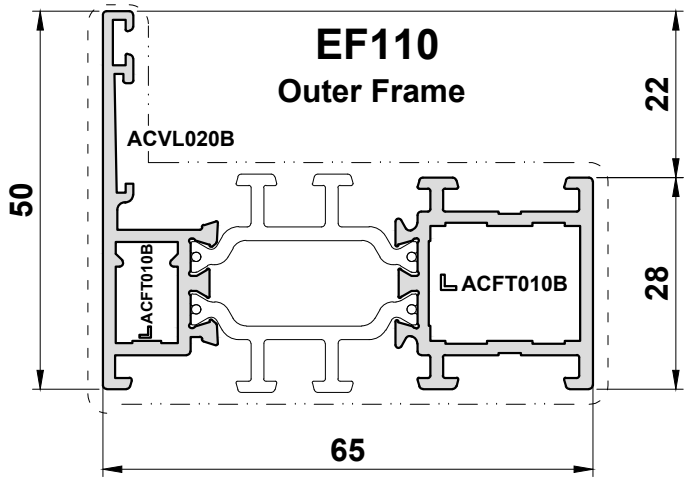

Scale 1:1

Primary Visible Side - - - - - - - - - - - - - - - - - - Secondary Visible Side — · — · — · — · — · —

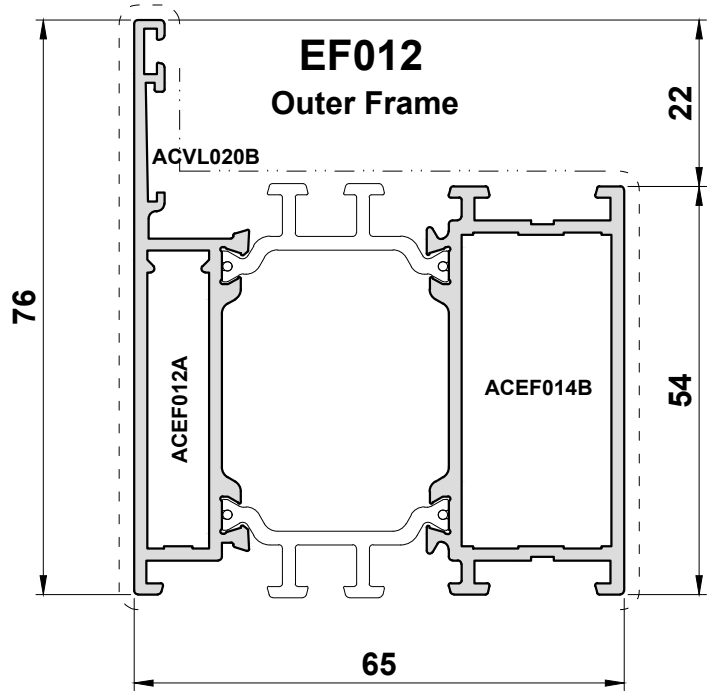

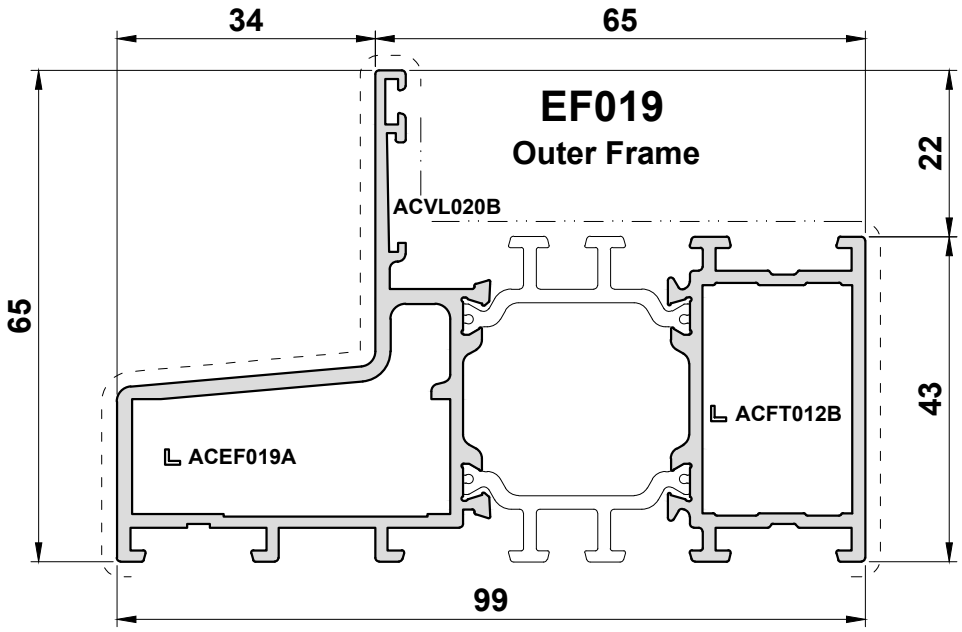

Scale 1:1

Scale 1:1

Primary Visible Side - - - - - - - - - - - - - - - - - - Secondary Visible Side — · — · — · — · — · — · —

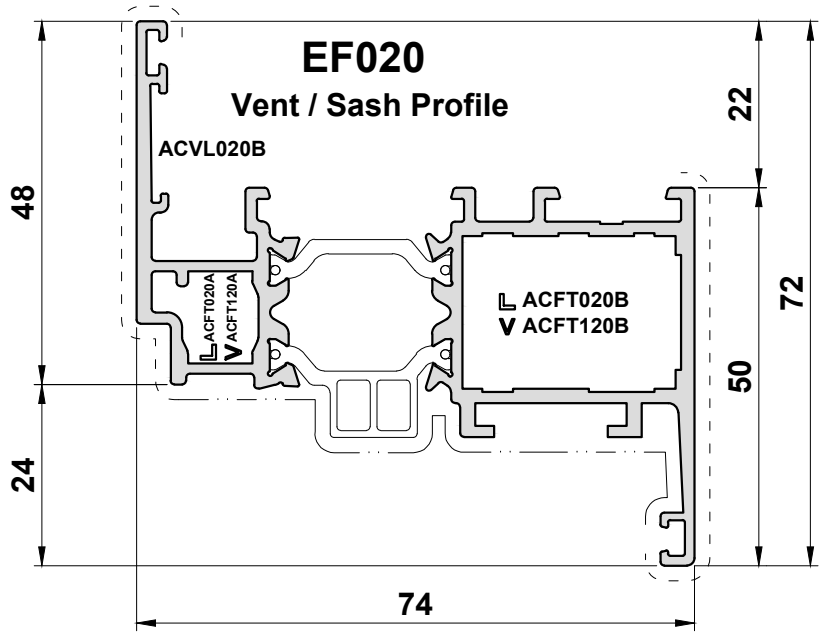

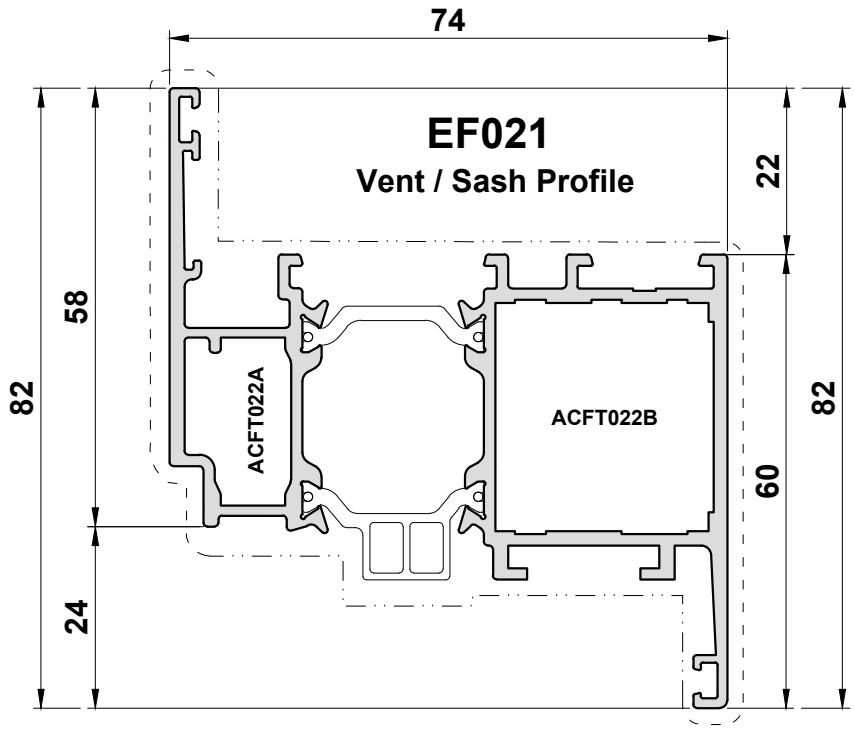

Scale 1:1

Primary Visible Side – – – – – – – – – – – – – – – – – Secondary Visible Side —·—·—·—·—·—·—

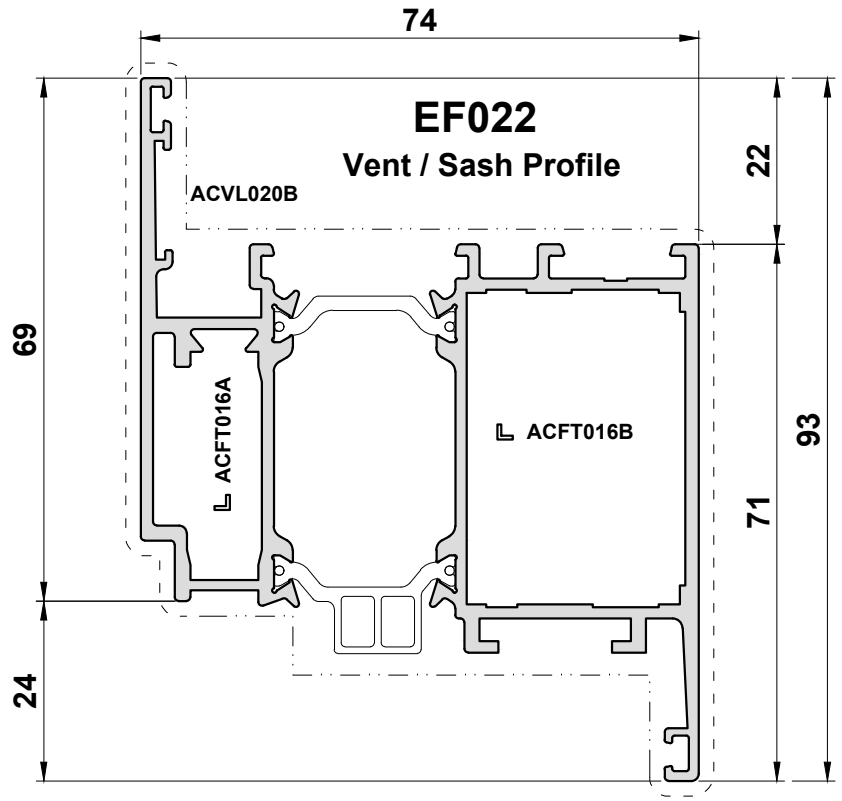

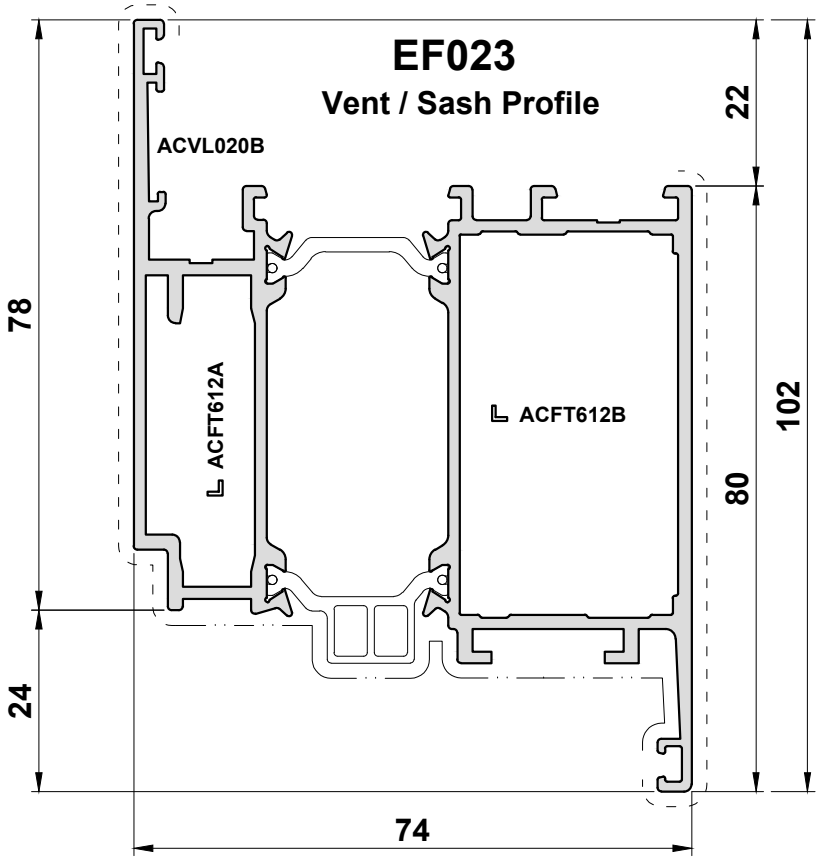

Scale 1:1

Primary Visible Side - - - - - - - - - - - - - - - - - - Secondary Visible Side — · — · — · — · — · — · —

EF030

Transom/ Mullion Profile

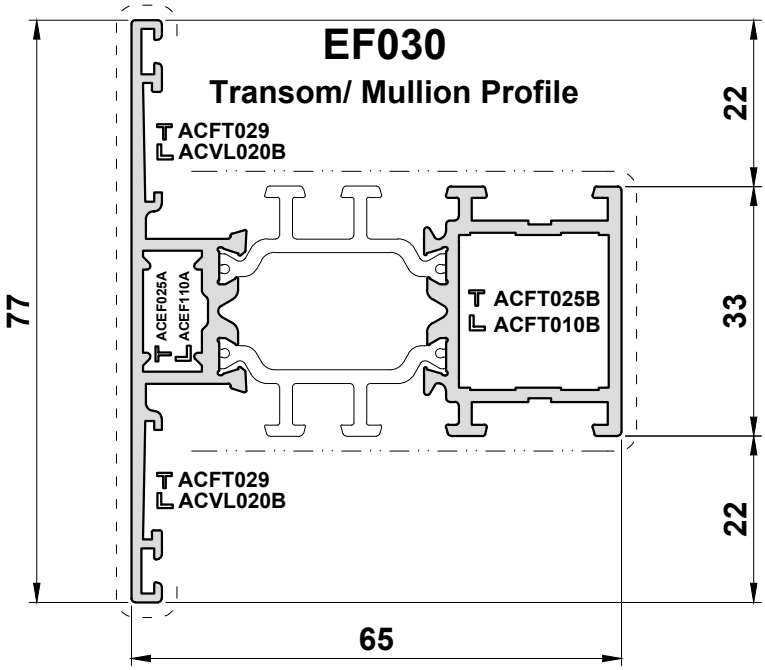

EF031

Transom/ Mullion Profile

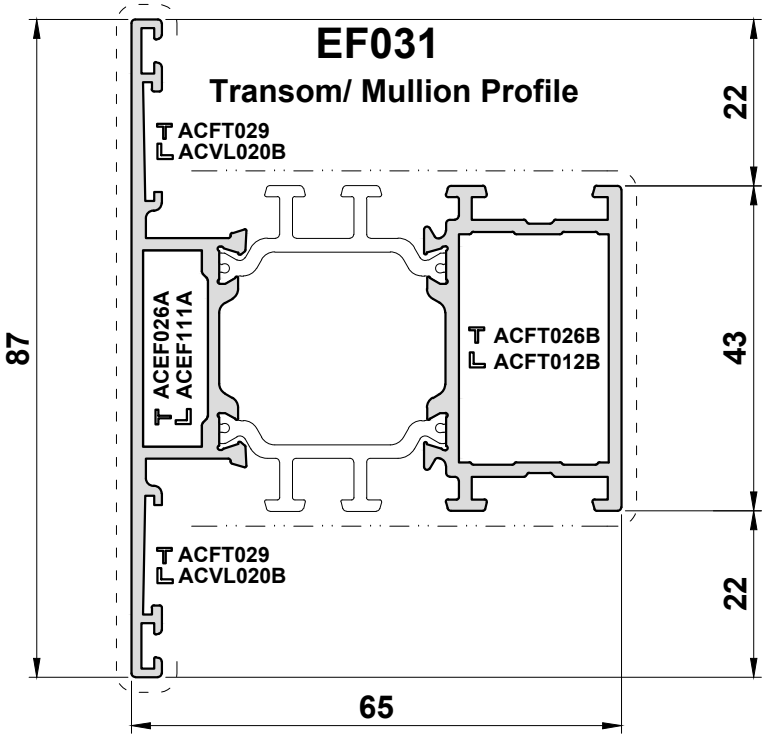

Scale 1:1

Primary Visible Side – – – – – – – – – – – – – – – – – Secondary Visible Side — · — · — · — · — · — · —

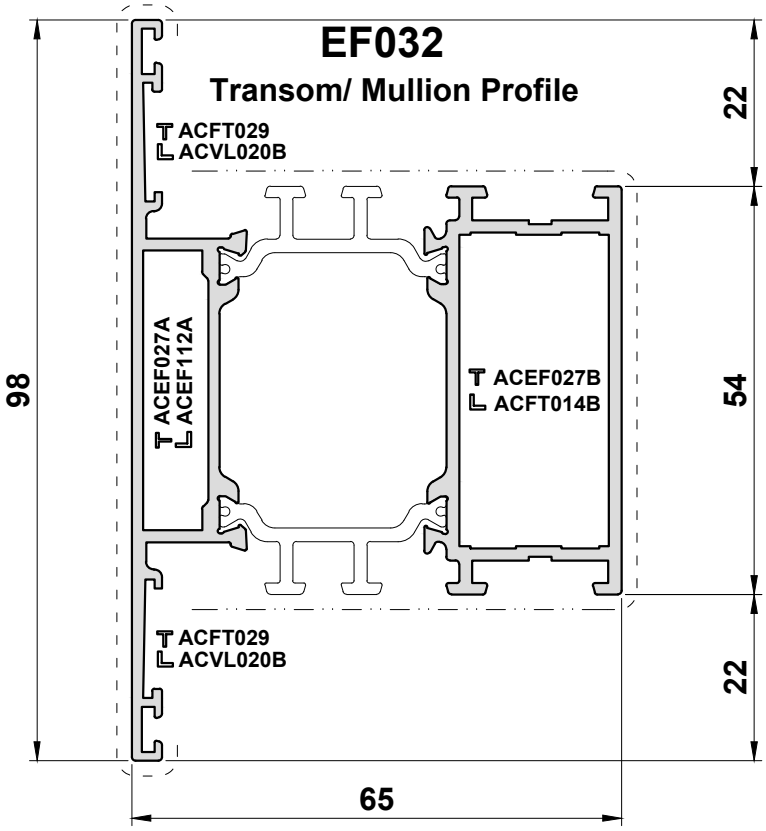

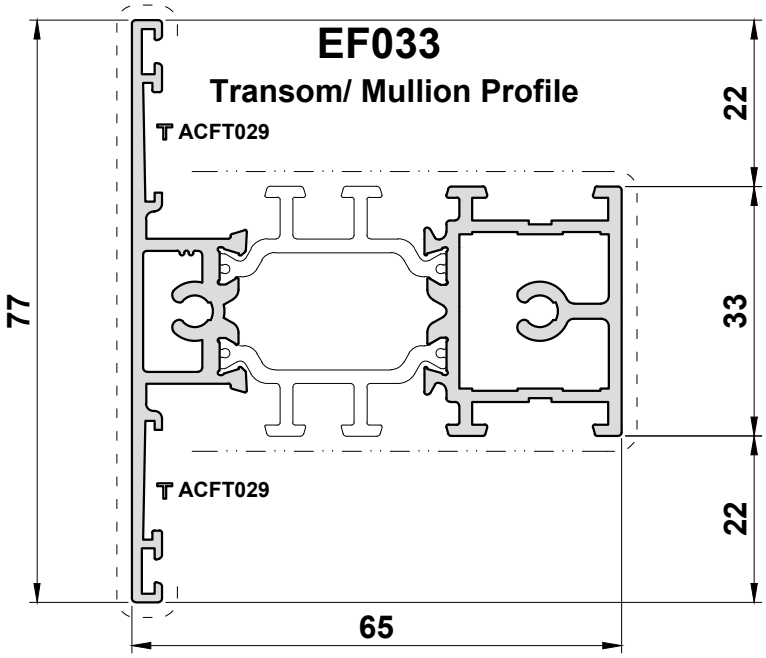

Scale 1:1

Primary Visible Side - - - - - - - - - - - - - - - - - Secondary Visible Side — · — · — · — · — · —

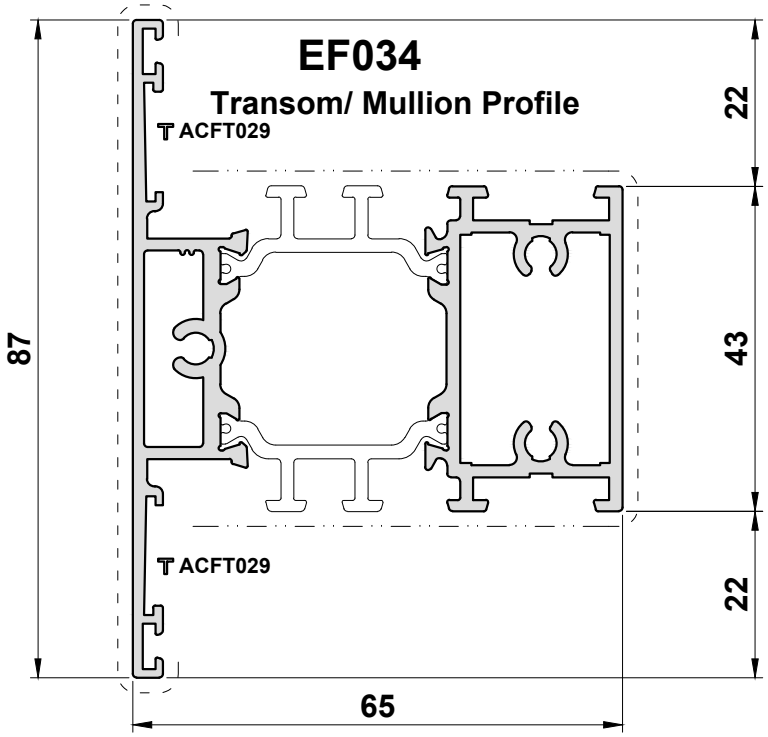

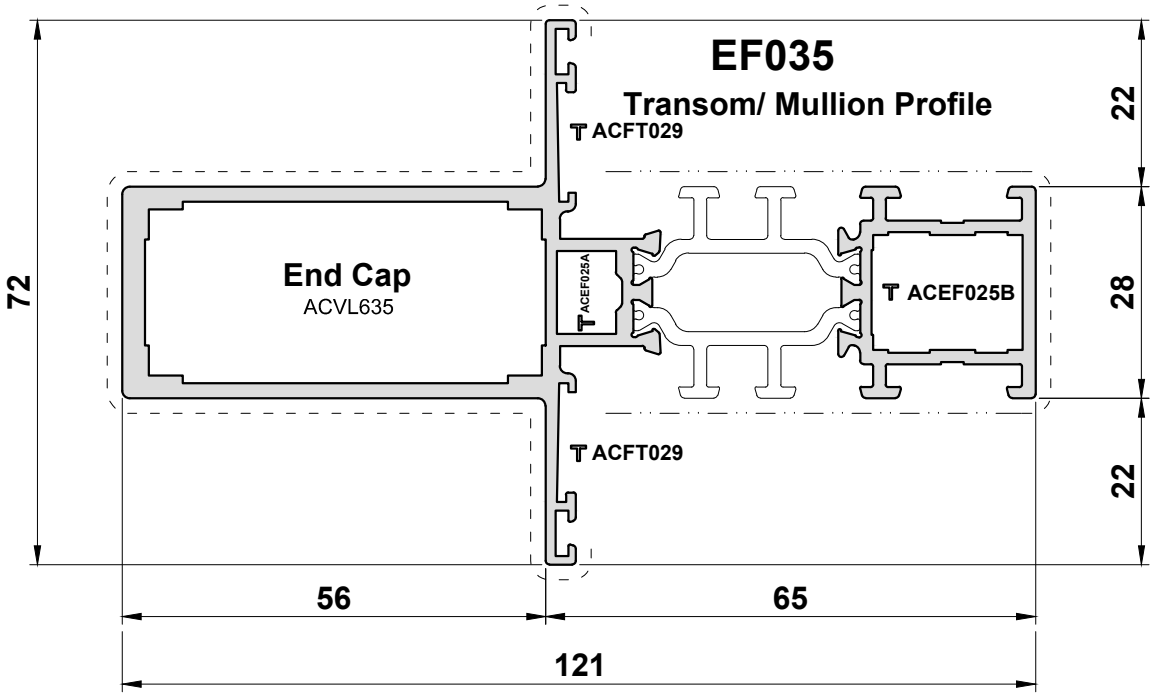

Scale 1:1

Primary Visible Side – – – – – – – – – – – – – – – – – Secondary Visible Side —·—·—·—·—·—·—

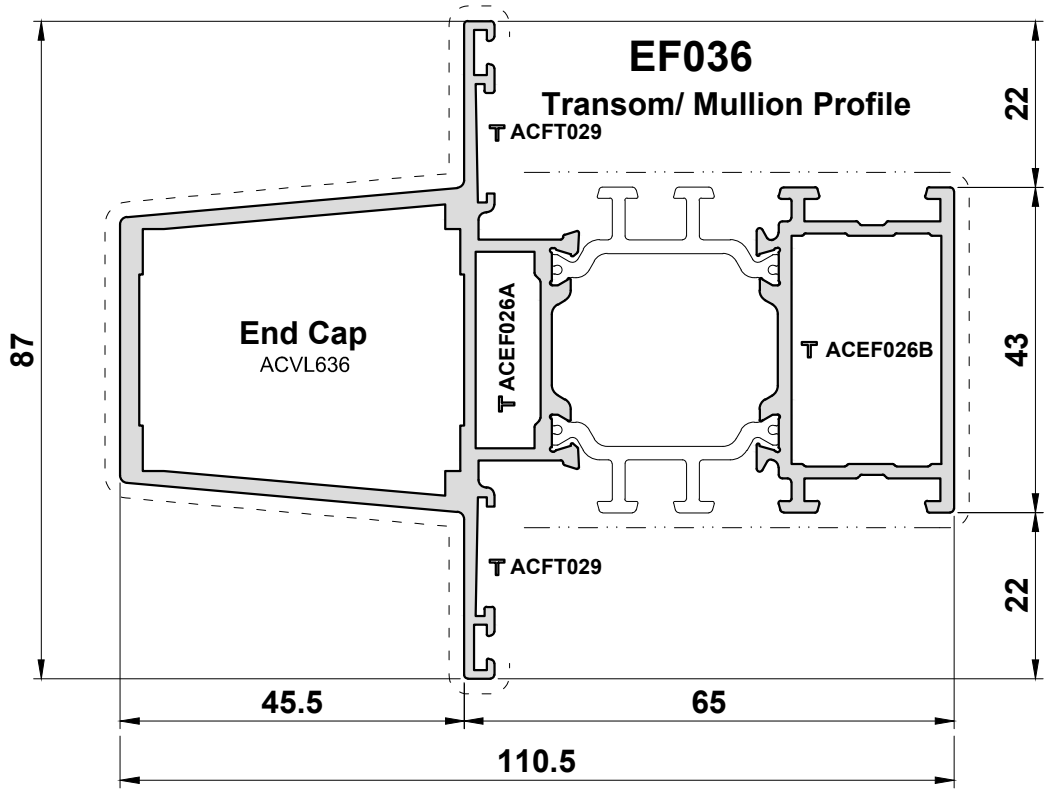

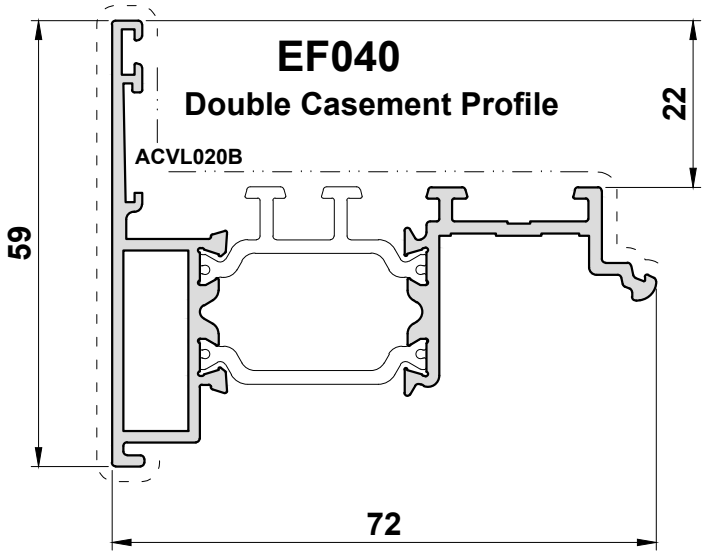

Scale 1:1

Primary Visible Side - - - - - - - - - - - - - - - - - - Secondary Visible Side —·—·—·—·—·—·—·—

EF434
Transom Profile

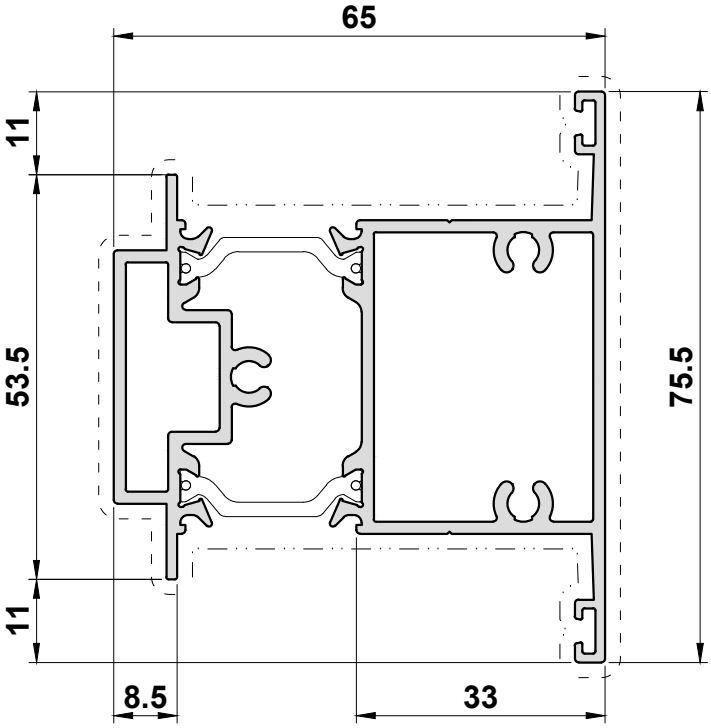

Scale 1:1

Primary Visible Side - - - - - - - - - - - - - - - - - - Secondary Visible Side — · — · — · — · — · — · —

EF044
Reverse Adapter

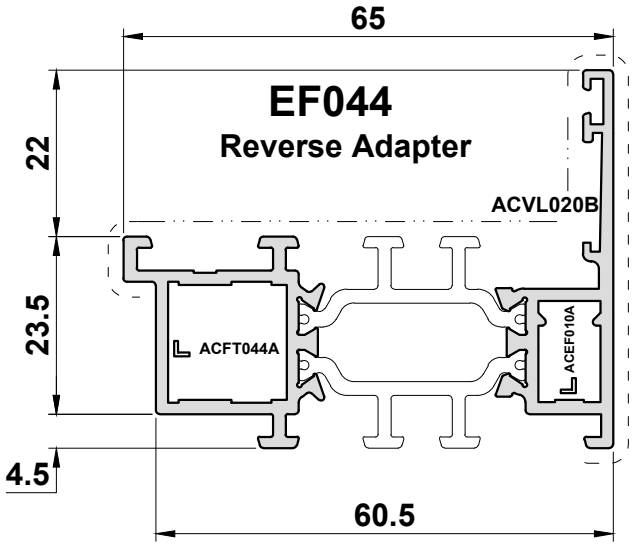

EF045
Reverse Adapter

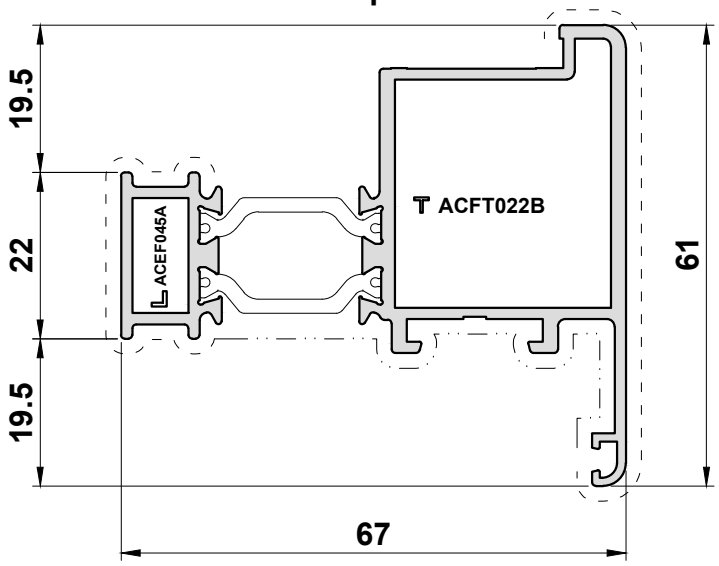

Scale 1:1

Primary Visible Side - - - - - - - - - - - - - - - - - - Secondary Visible Side — · — · — · — · — · — · —

EF094
Low Threshold

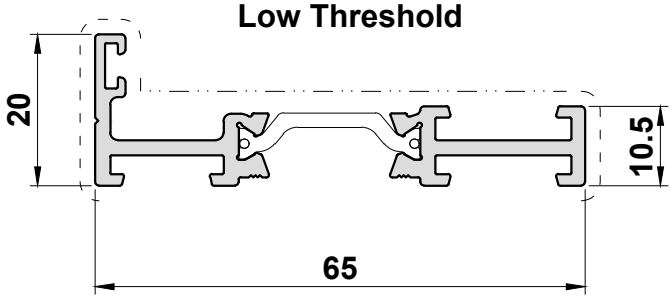

EF095
Weather Drip

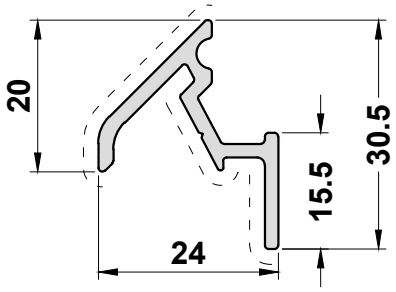

End Cap: ACEF095/096

Scale 1:1

Primary Visible Side – – – – – – – – – – – – – – – – – Secondary Visible Side — · — · — · — · — · — · —

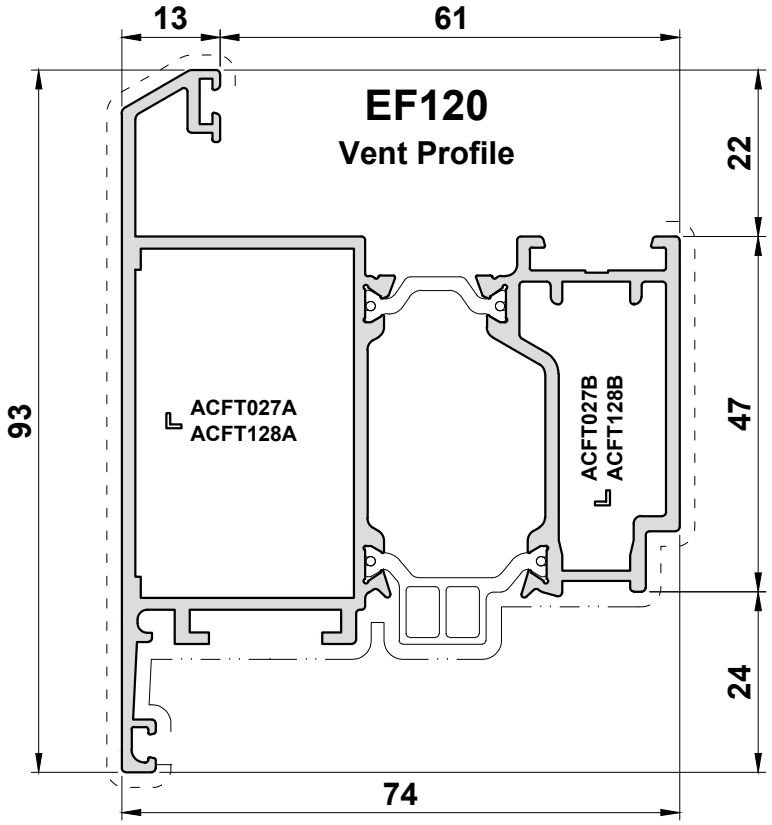

Scale 1:1

Primary Visible Side - - - - - - - - - - - - - - - - - Secondary Visible Side — · — · — · — · — · — · —

EF130

Dummy Transom/Mullion

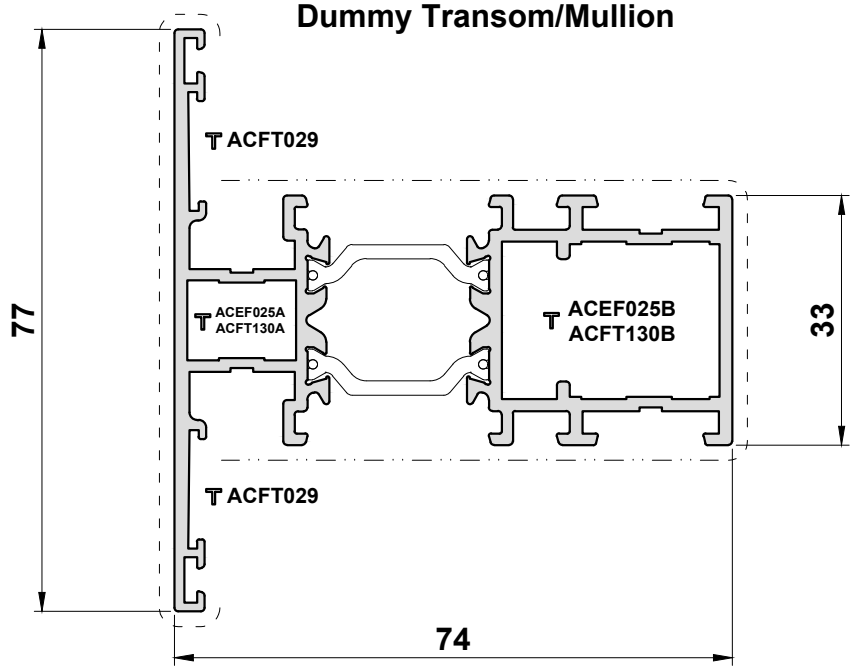

EF131

Dummy Transom/Mullion

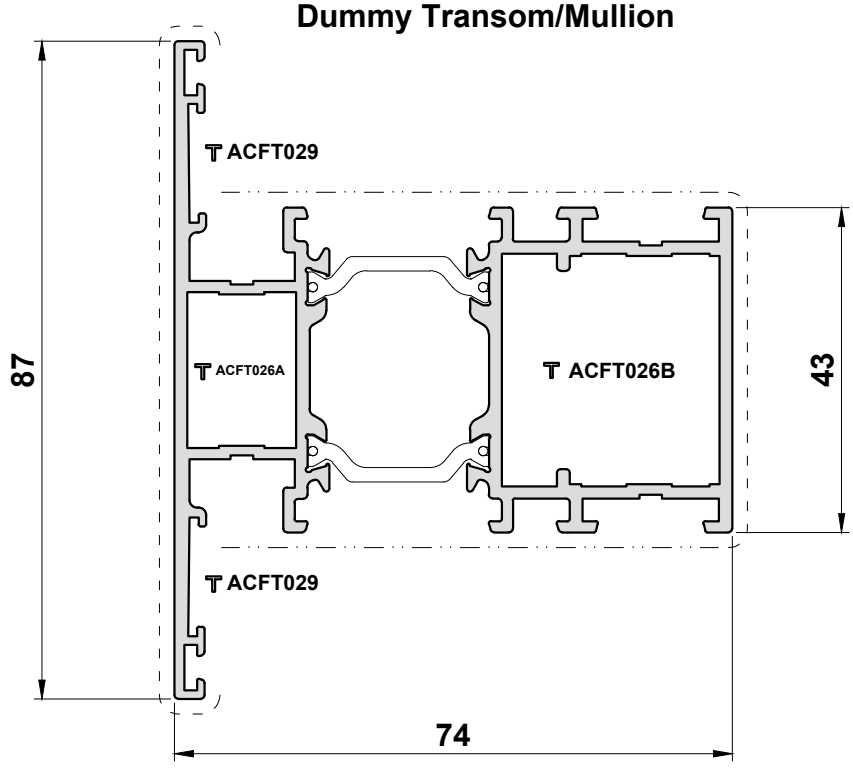

Scale 1:1

Primary Visible Side - Secondary Visible Side — · — · — · — · — · — · — · —

EF414
Open Out
Outer Frame

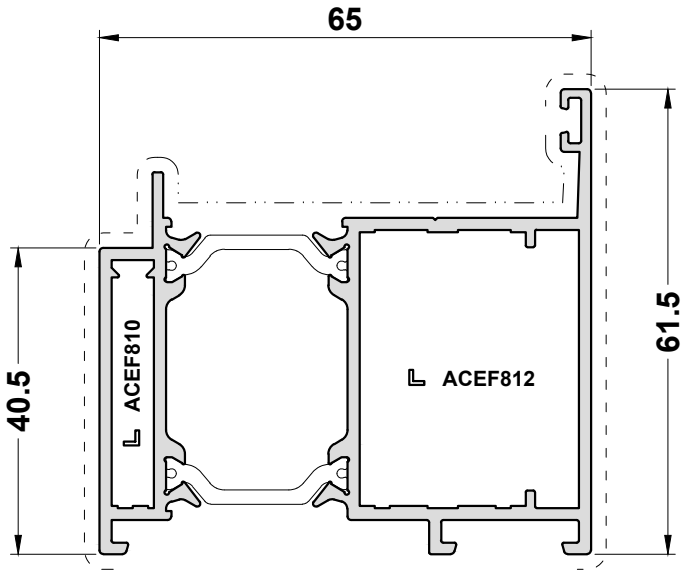

EF415
Open In
Outer Frame

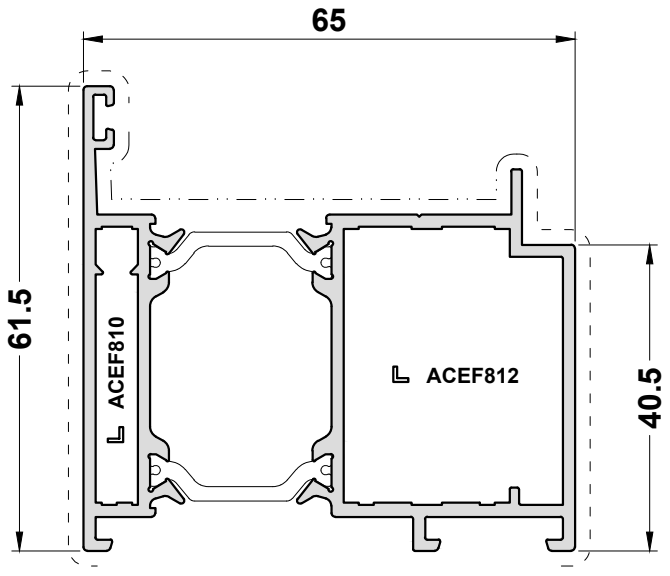

Scale 1:1

Primary Visible Side - - - - - - - - - - - - - - - - - - Secondary Visible Side — · — · — · — · — · — · —

EF424
Open In Vent Profile

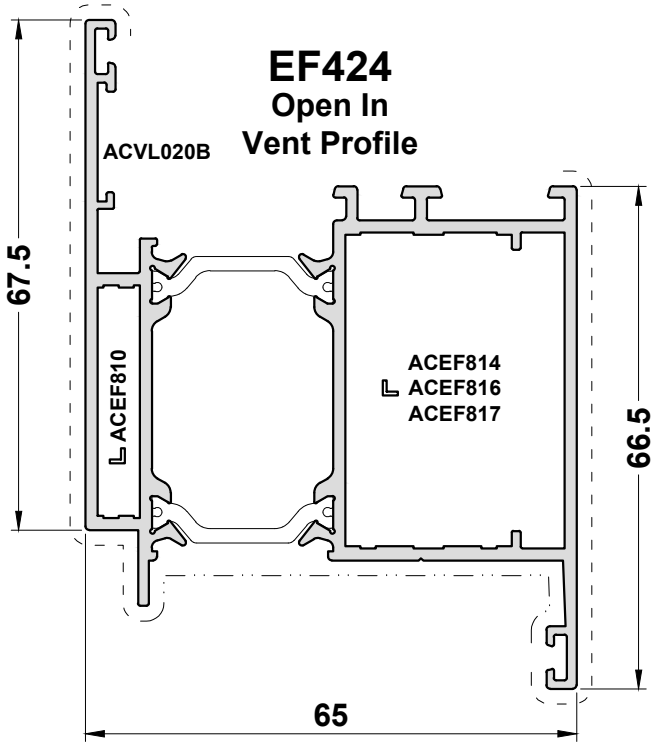

EF425
Open Out Vent Profile

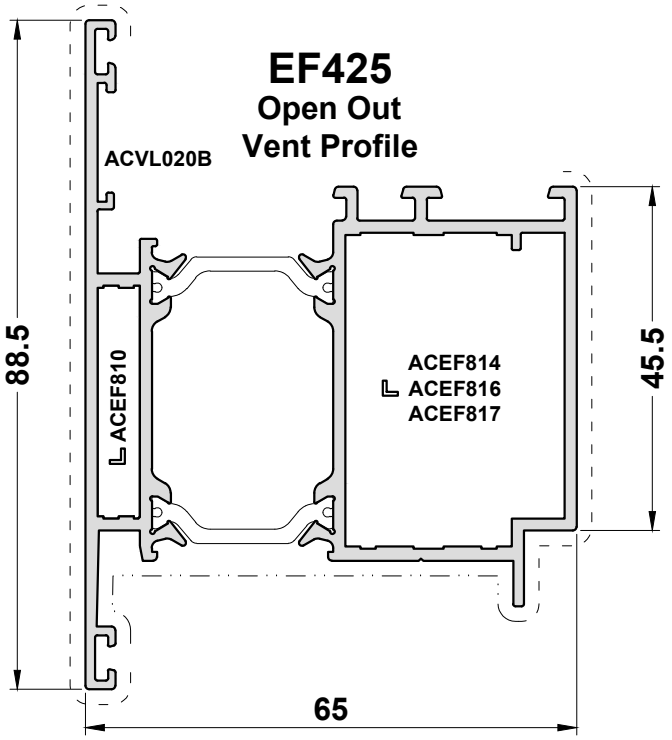

Scale 1:1

Primary Visible Side - - - - - - - - - - - - - - - - - - Secondary Visible Side — · — · — · — · — · — · —

EF455
Mullion Adaptor

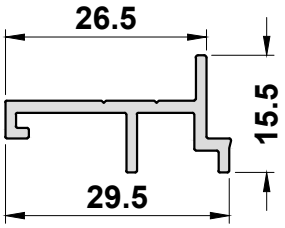

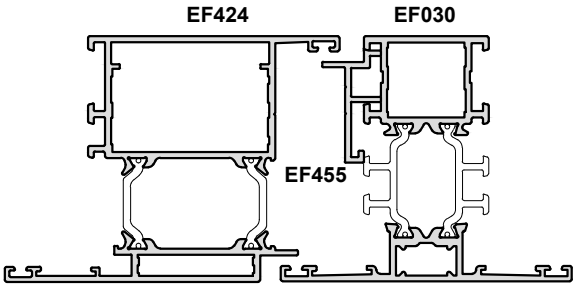

EF492
Low Threshold

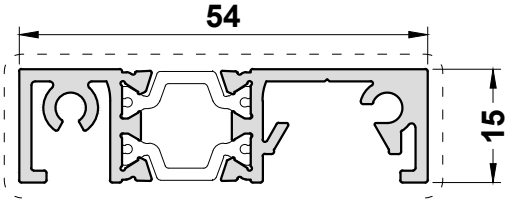

EF493
Low Threshold

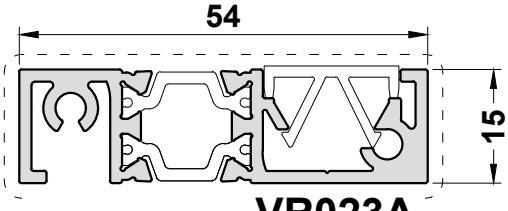

VR023A

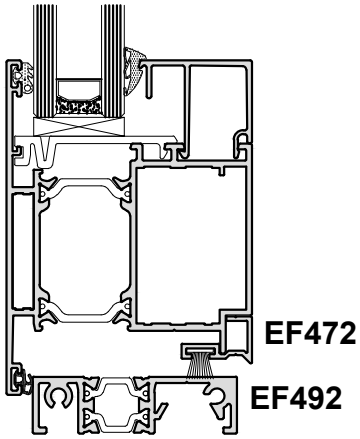

Scale 1:1

Primary Visible Side - - - - - - - - - - - - - - - - - - Secondary Visible Side — · — · — · — · — · — · —

EF472
Bottom Rail Adaptor

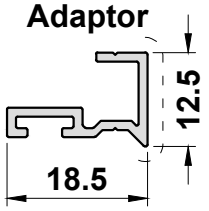

EF473
Bottom Rail Adaptor

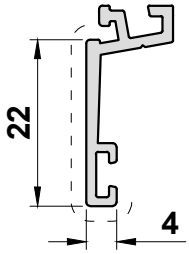

EF474
Bottom Rail Adaptor

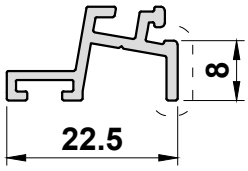

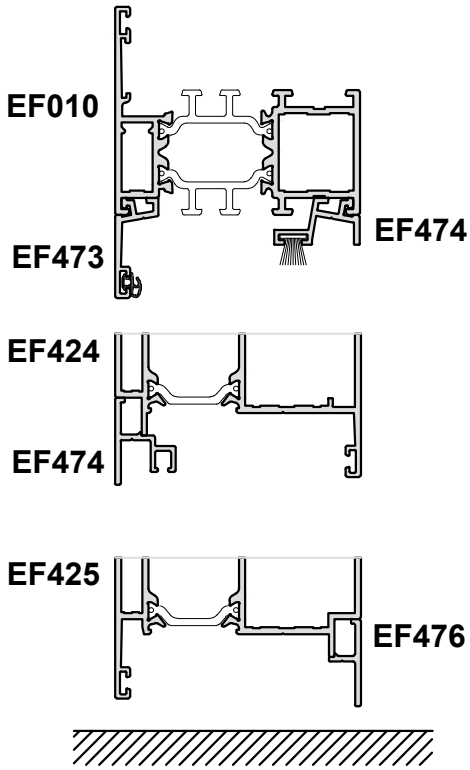

EF475
Bottom Rail Adaptor

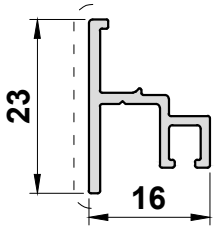

EF476
Bottom Rail Adaptor

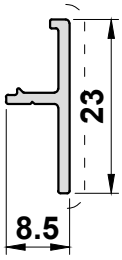

Scale 1:1

Primary Visible Side - - - - - - - - - - - - - - - - - - Secondary Visible Side — · — · — · — · — · — · —

EF558
Sub Cill Adaptor

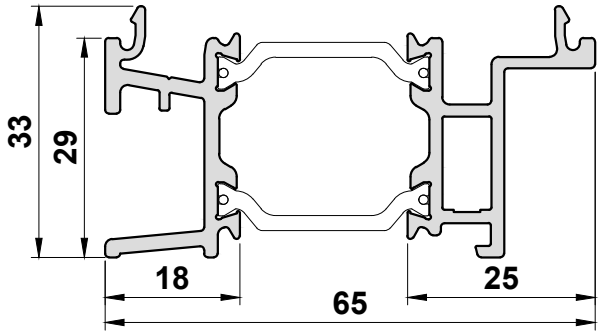

EF657
Flush Cill

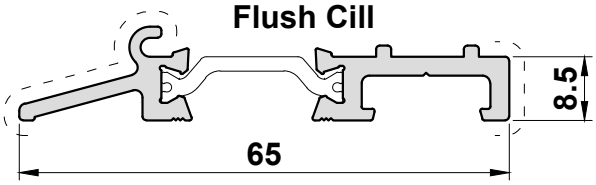

Scale 1:1

Primary Visible Side - - - - - - - - - - - - - - - - - - Secondary Visible Side — · — · — · — · — · — · —

EF910

Open Out Outer Frame

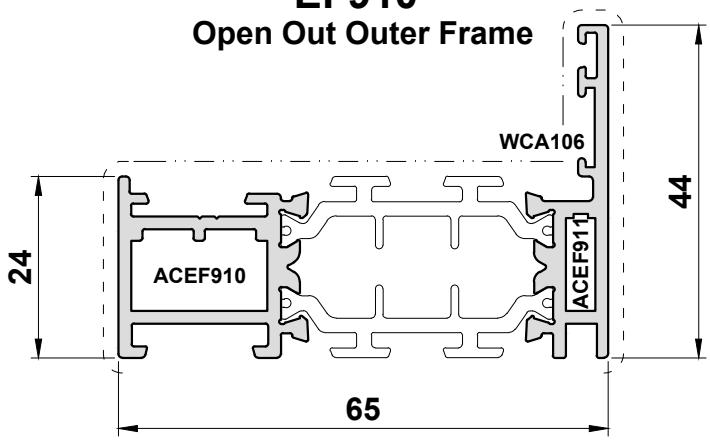

Scale 1:1

Primary Visible Side - - - - - - - - - - - - - - - - - - Secondary Visible Side — · — · — · — · — · — · —

EF917
Open In Outer Frame

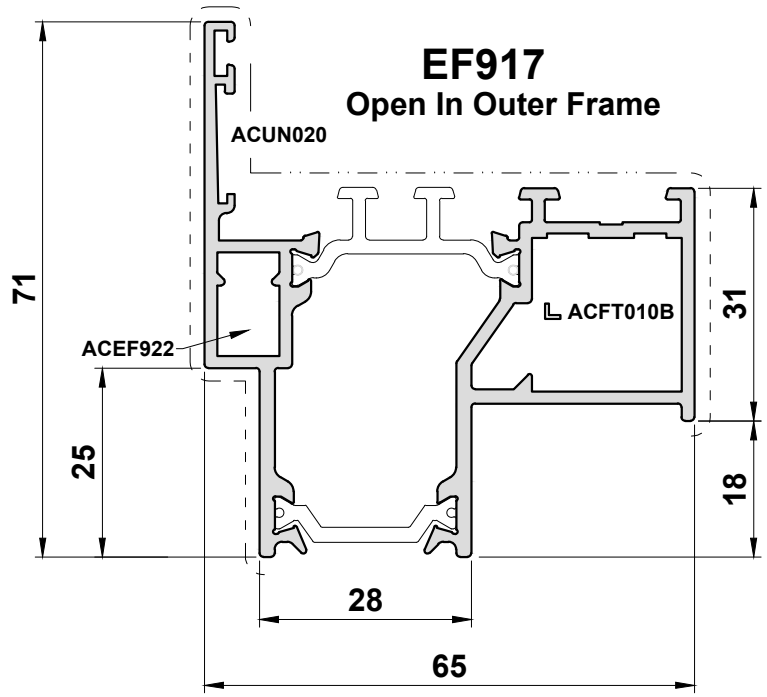

EF918
Open Out Outer Frame

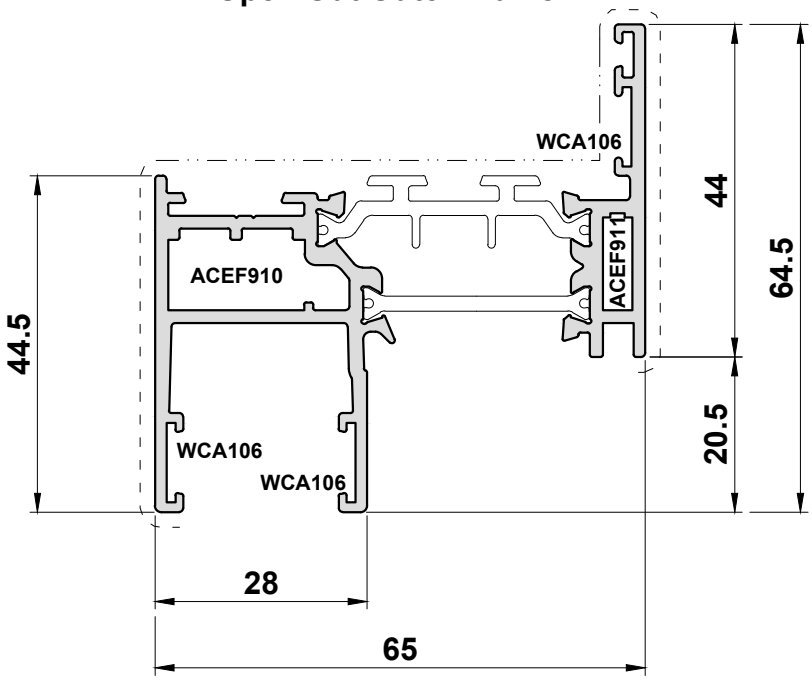

Scale 1:1

Primary Visible Side - - - - - - - - - - - - - - - - - - Secondary Visible Side — · — · — · — · — · — · —

EF926
Open Out Sash

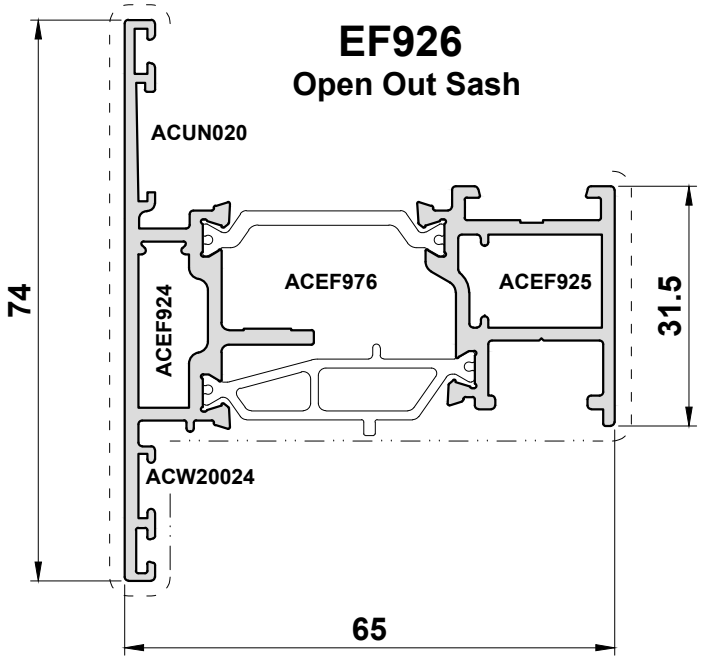

EF930
Open Out Transom/Mullion

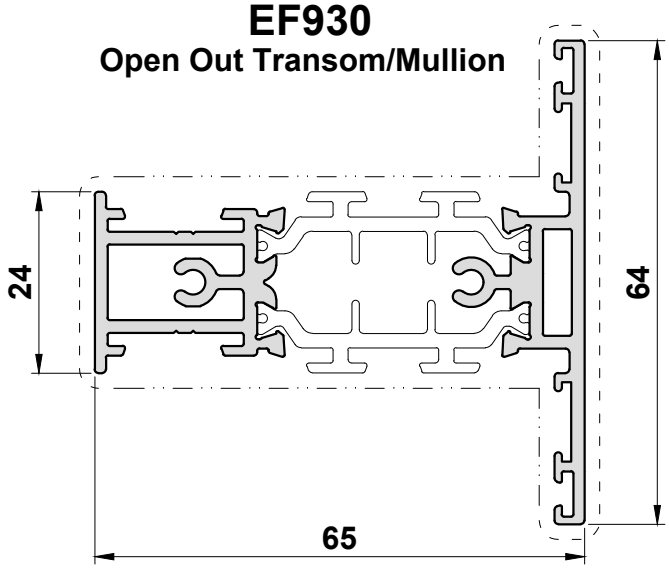

EF932
Open Out Transom/Mullion without Screwport

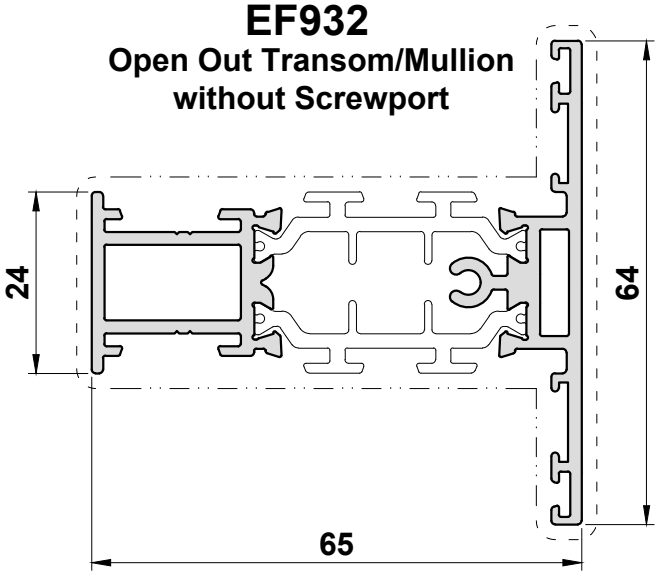

Scale 1:1

Primary Visible Side - - - - - - - - - - - - - - - - - - Secondary Visible Side — · — · — · — · — · — · —

EF945
Open Out Reverse Adaptor

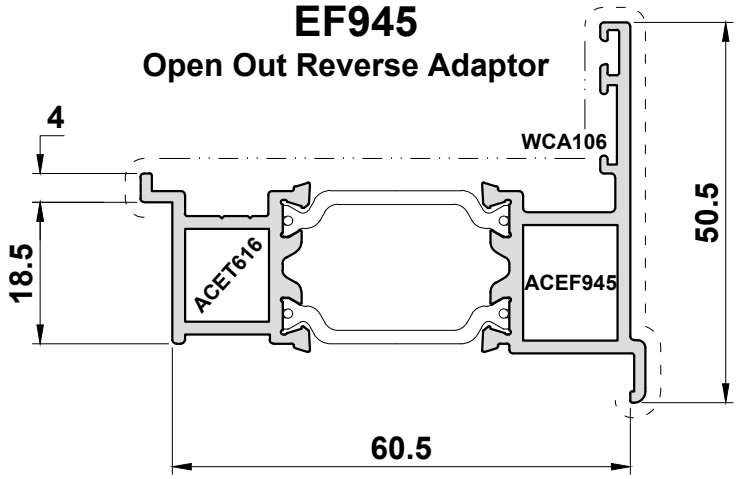

EF946
Fixed Light Reverse Adapter

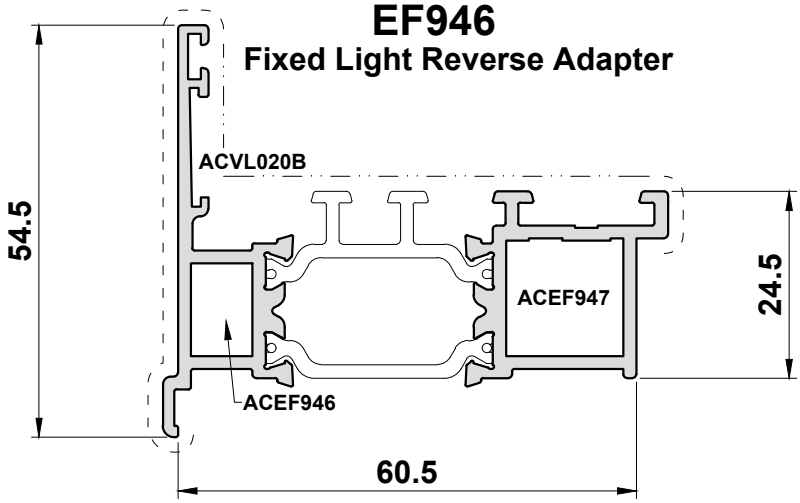

Scale 1:1

Primary Visible Side - - - - - - - - - - - - - - - - - - Secondary Visible Side — · — · — · — · — · — · —

EF952
Low Threshold for Open In Doors

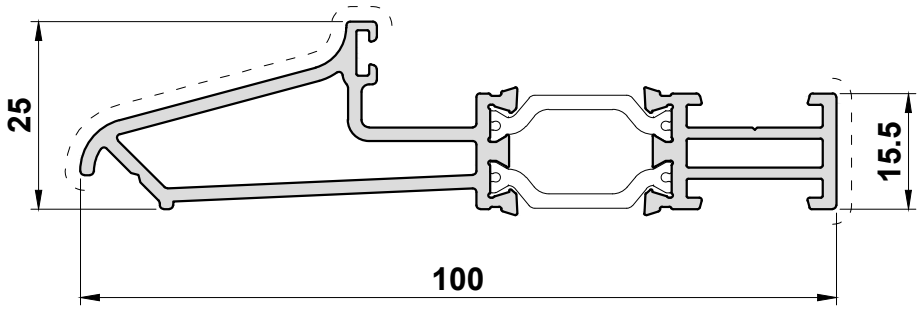

EF953
Low Threshold for Open Out Doors

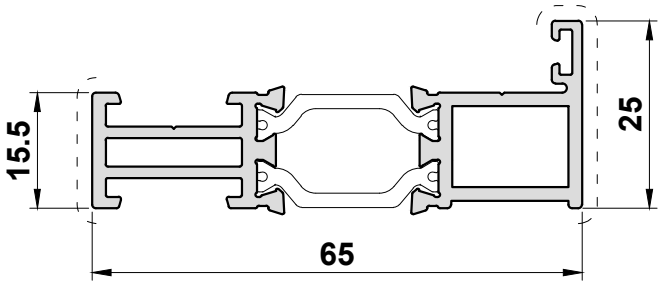

EF954
Rebate For EF120 With Low Threshold

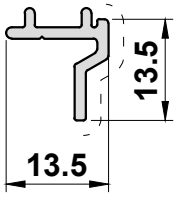

Scale 1:1

Primary Visible Side - - - - - - - - - - - - - - - - - Secondary Visible Side — · — · — · — · — · — · —

EF955
Head Extension

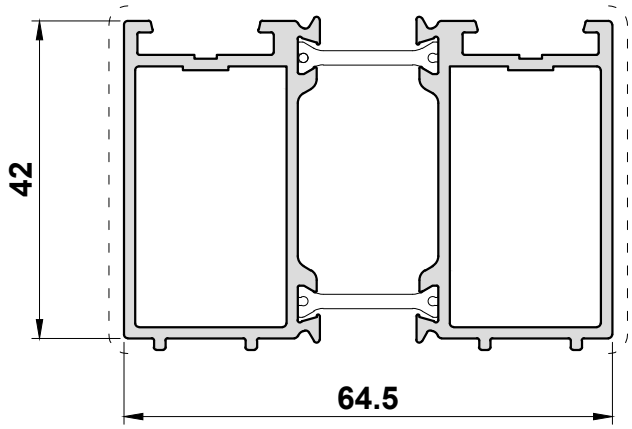

EF960
Sloped 24mm Glazing Bead

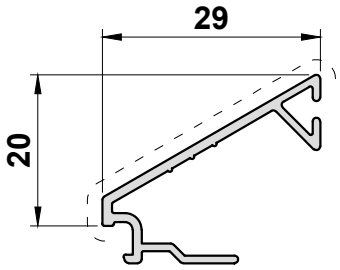

EF961
Sloped 28mm Glazing Bead

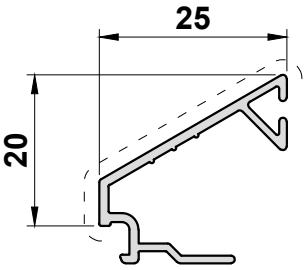

EF962
Sloped 32mm Glazing Bead

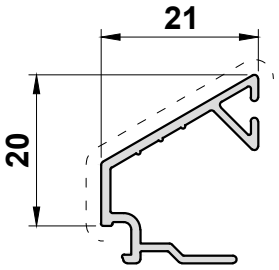

EF966
Square 28mm Glazing Bead

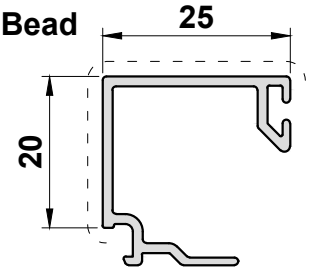

EF967
Square 32mm Glazing Bead

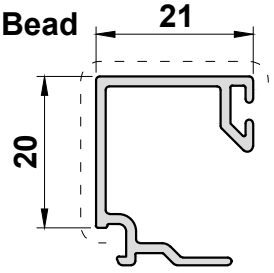

Scale 1:1

Primary Visible Side - - - - - - - - - - - - - - - - - - Secondary Visible Side — · — · — · — · — · — · —

EF992
Woolpile Carrier

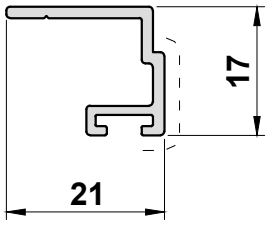

EF993
Low Threshold

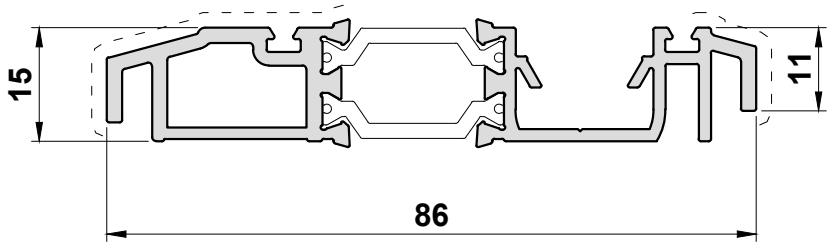

EF994
Low Threshold Rebate

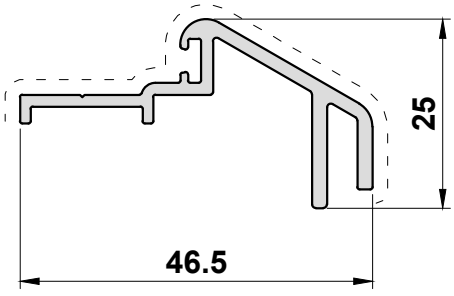

EF995
Low Threshold Adaptor

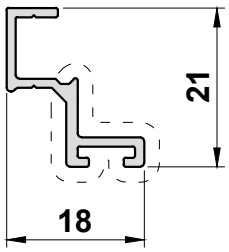

Scale 1:1

Primary Visible Side – – – – – – – – – – – – – – – – – Secondary Visible Side —·—·—·—·—·—·—

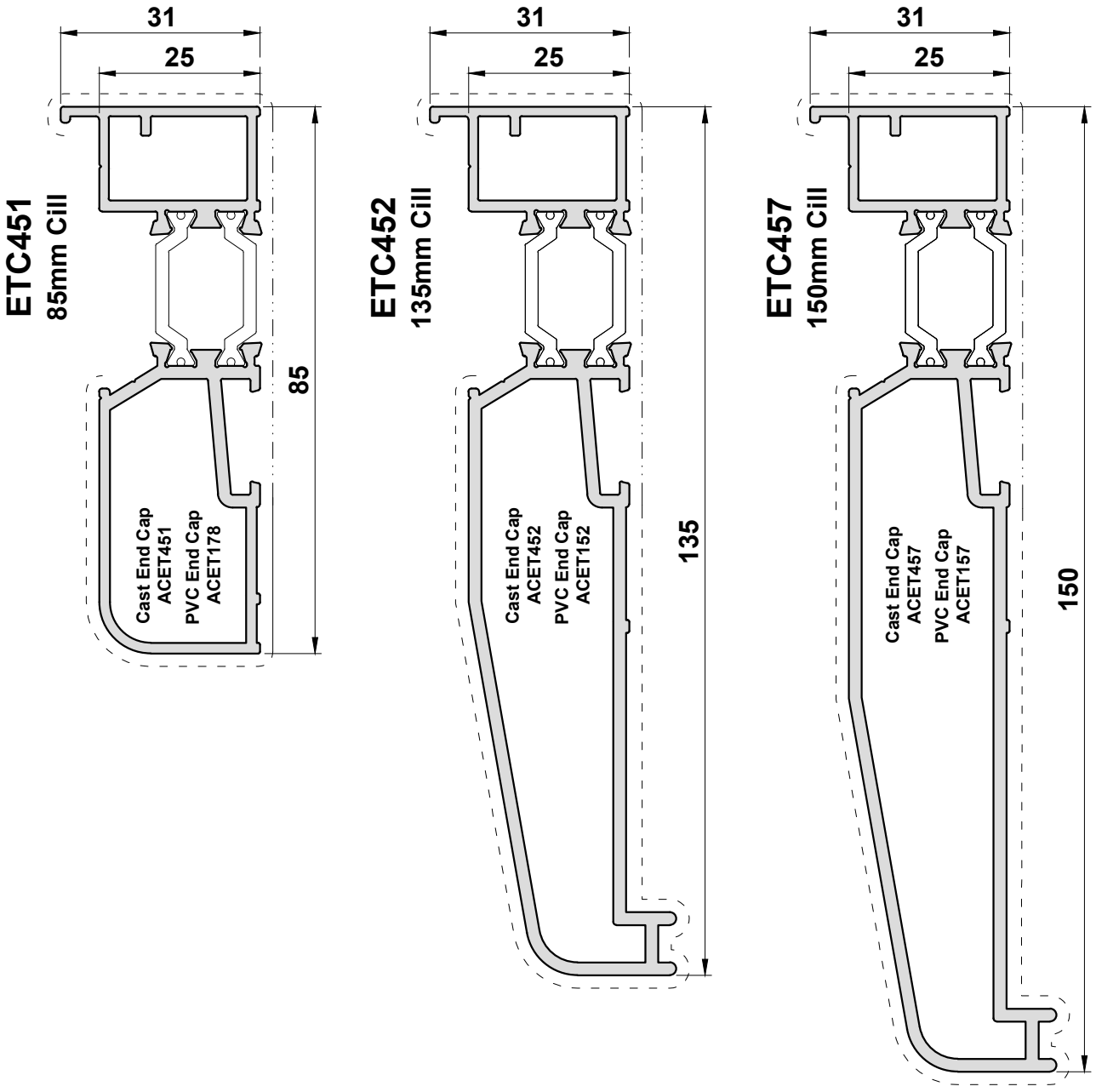

Scale 1:1

Primary Visible Side - - - - - - - - - - - - - - - - - - Secondary Visible Side —·—·—·—·—·—·—·—

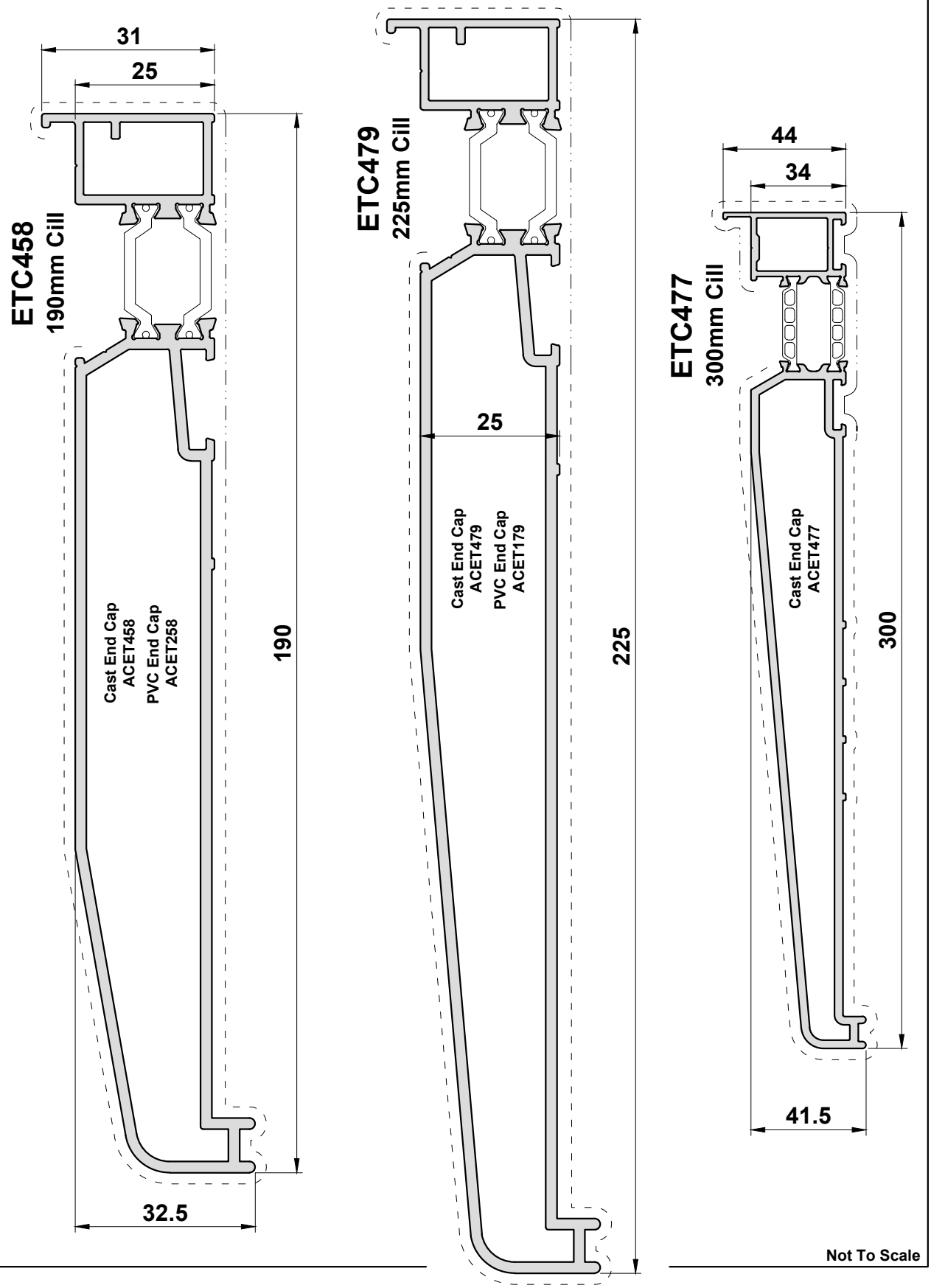

Not To Scale

Primary Visible Side - - - - - - - - - - - - - - - - - - Secondary Visible Side —·—·—·—·—·—·—·—

FT050
90° Corner Post

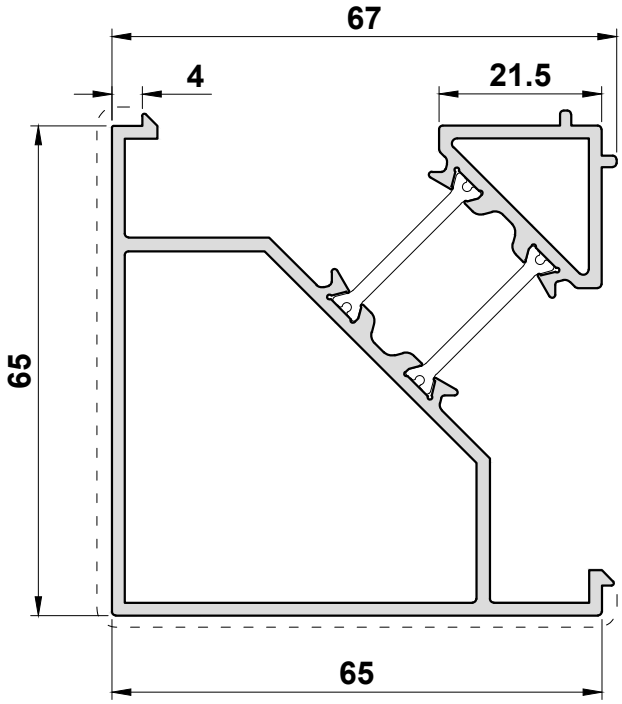

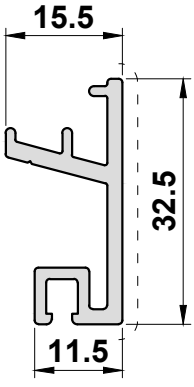

FT055
EF120 Bottom Rail Add On

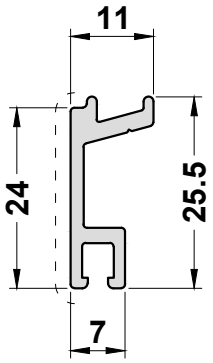

FT056
EF120 Bottom Rail Add On

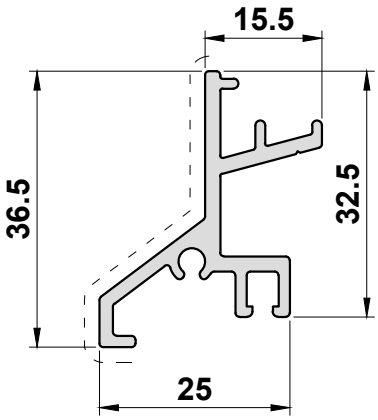

FT057
EF023 Bottom Rail Add On

Scale 1:1

Primary Visible Side - - - - - - - - - - - - - - - - - Secondary Visible Side —·—·—·—·—·—·—·—

FT053
Coupler

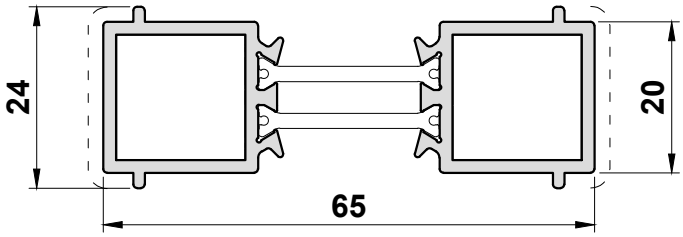

FT054
Coupler

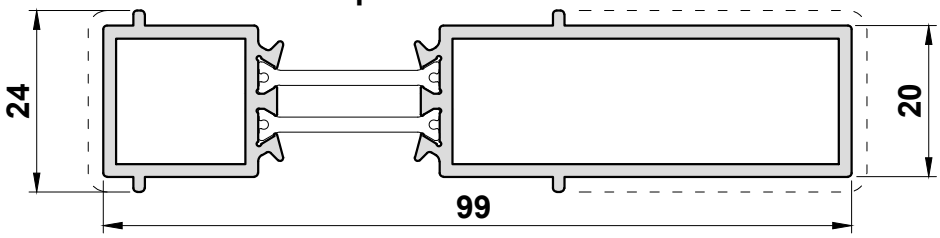

FT155
Coupler

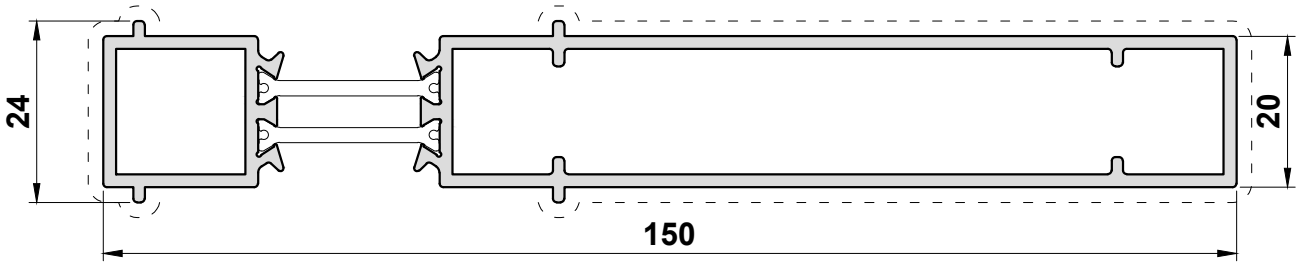

FT156
Coupler

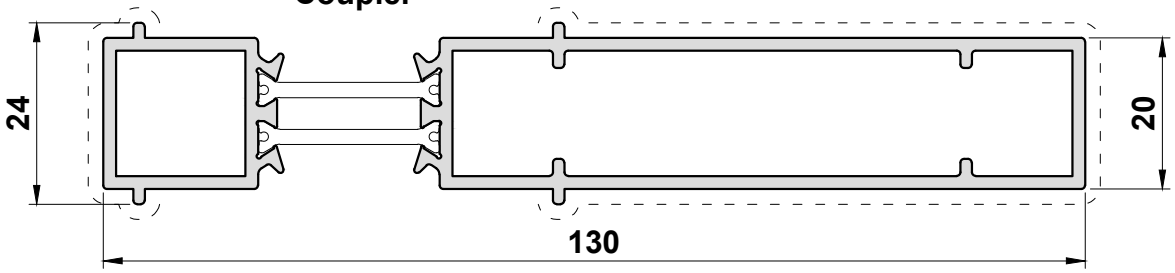

Scale 1:1

Primary Visible Side

Secondary Visible Side

FT151
Variable Angled Coupler

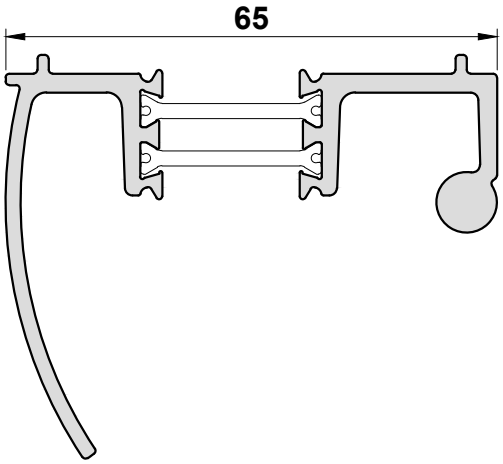

FT152
Variable Angled Coupler

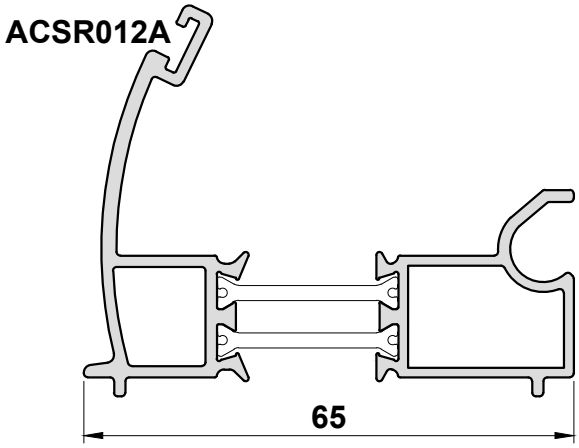

FT153
Variable Angled Coupler

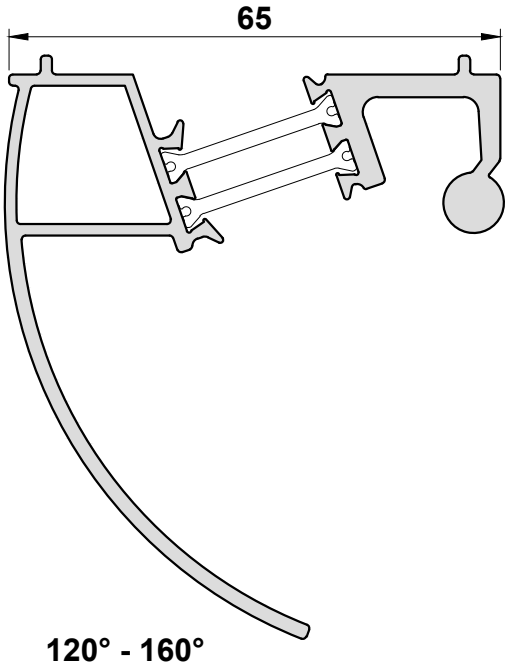

FT154
Variable Angled Coupler

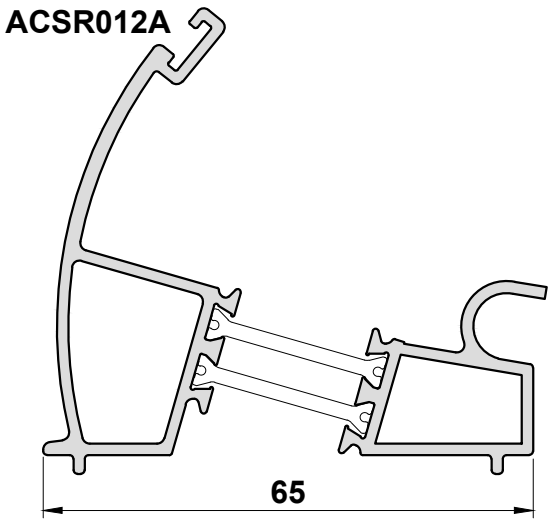

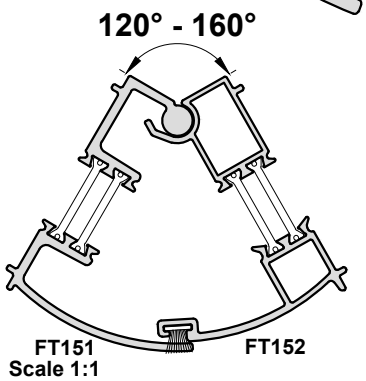

Scale 1:1

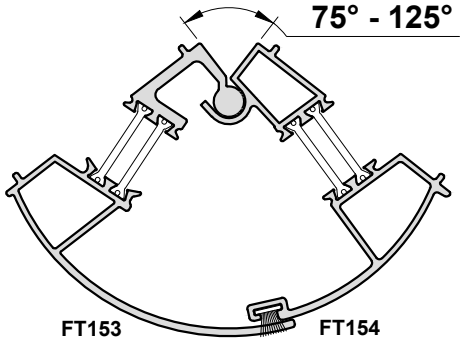

Primary Visible Side - - - - - - - - - - - - - - - - - - Secondary Visible Side — · — · — · — · — · — · —

FT422
PVC Infill

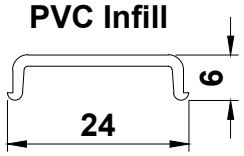

FT458
Cill Section

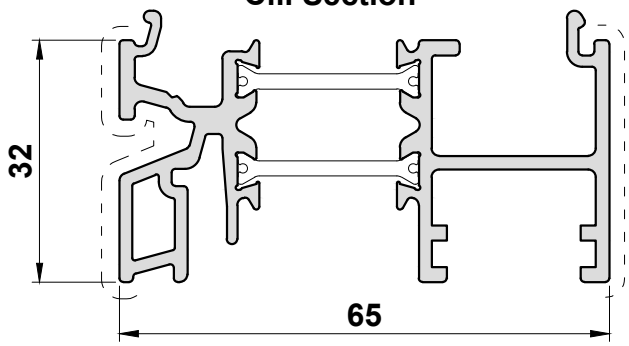

FT557
Cill Section

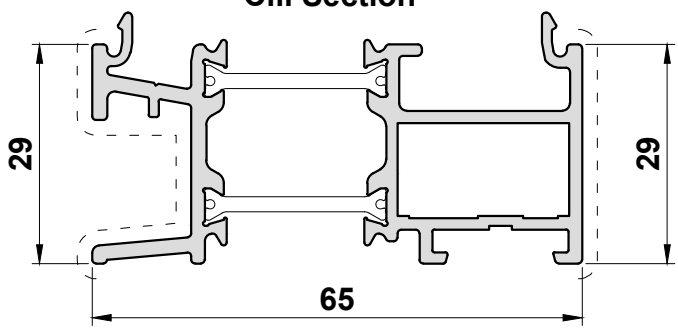

Scale 1:1

Primary Visible Side - - - - - - - - - - - - - - - - - Secondary Visible Side —·—·—·—·—·—·—

GL004

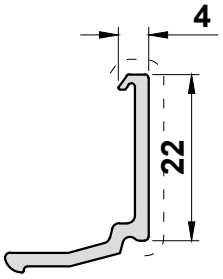

GL008

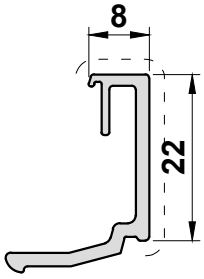

GL012

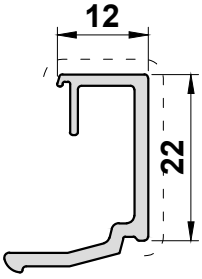

GL014

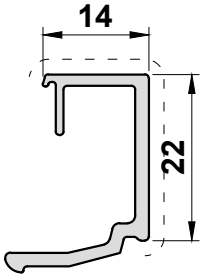

GL016

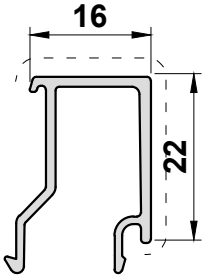

GL020

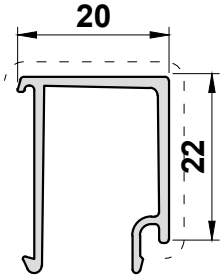

GL023

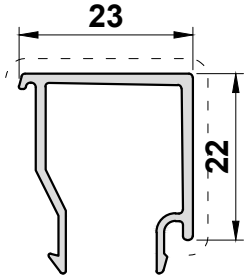

GL026

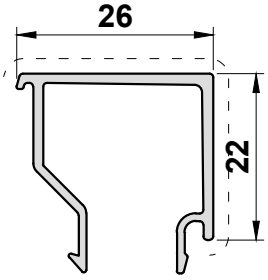

GL028

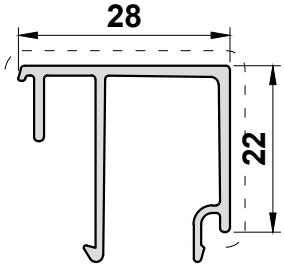

GL030

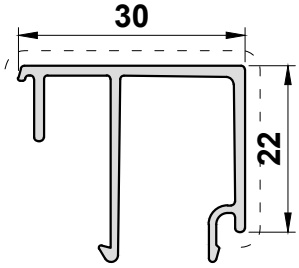

GL034

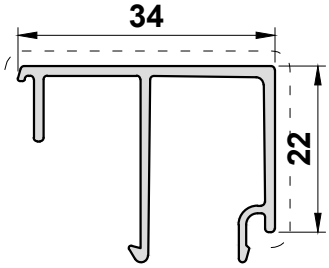

GL037

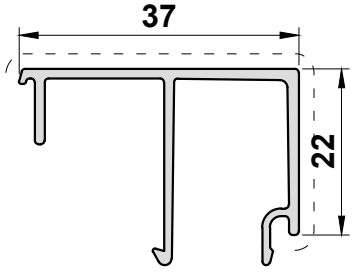

GL039

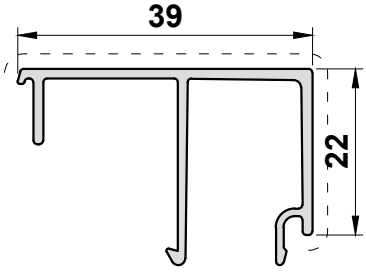

GL041

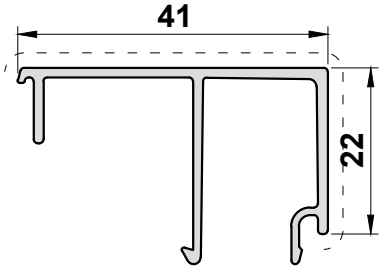

Scale 1:1

Primary Visible Side - - - - - - - - - - - - - - - - - Secondary Visible Side —·—·—·—·—·—·—

GL045

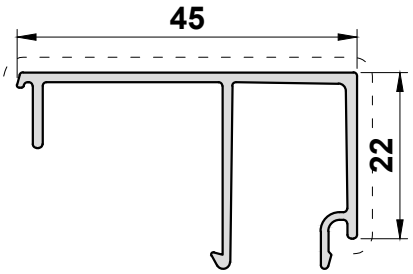

GL048

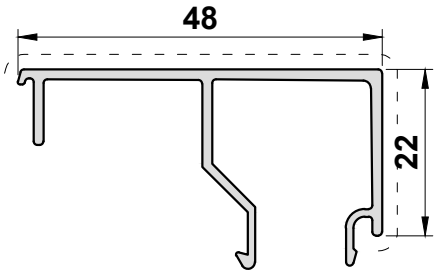

GL117

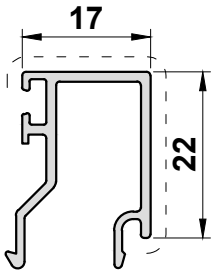

GL126

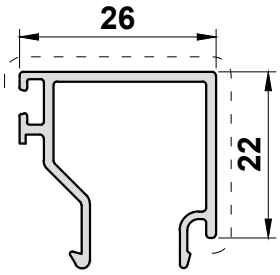

GL130

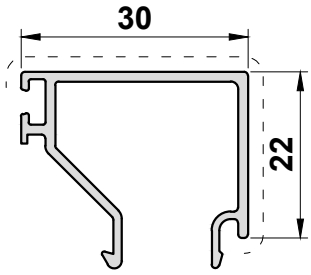

GL504

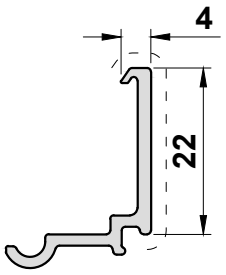

GL512

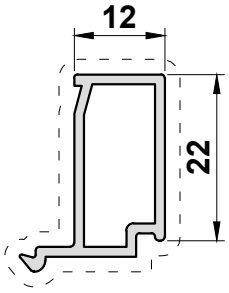

GL512N

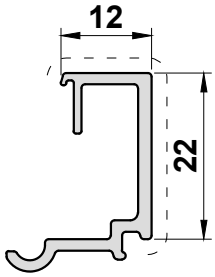

GL516

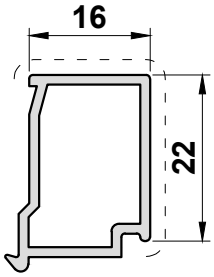

GL521

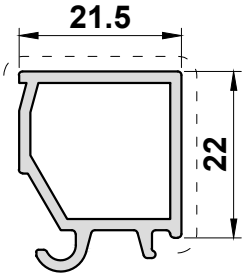

GL526

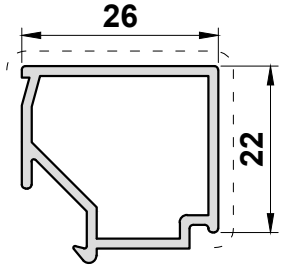

GL530

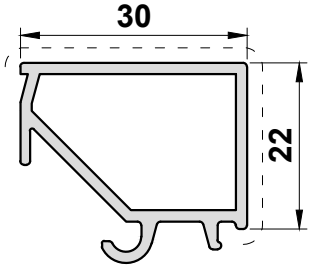

GL534

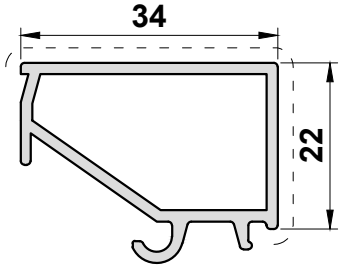

Scale 1:1

Primary Visible Side – – – – – – – – – – – – – – – – – Secondary Visible Side — · — · — · — · — · — · —

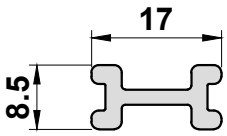

UN150
Concealed Coupler
Alternatively VL75, ACFT075

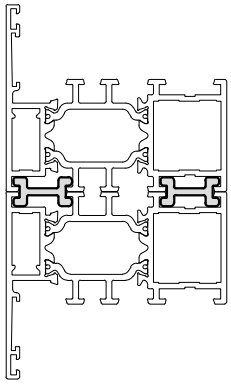

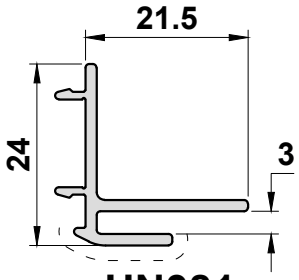

UN381
Pressing Carrier

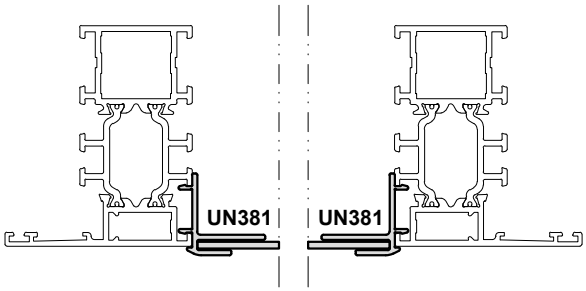

ETC090

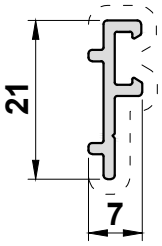

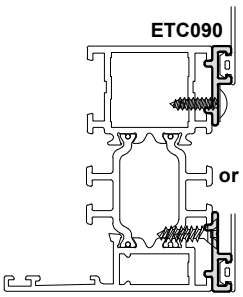

Use with OBEX 0764 EPDM.
Obex Protection:
T. 01905 337800
E: sales@obex.com

Scale 1:1

Primary Visible Side - - - - - - - - - - - - - - - - - - Secondary Visible Side —·—·—·—·—·—·—

UN500
UN510 Cover Cap

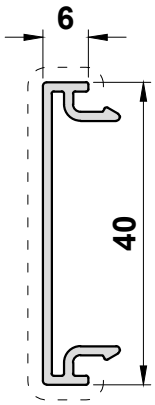

UN510
Reinforcement Profile

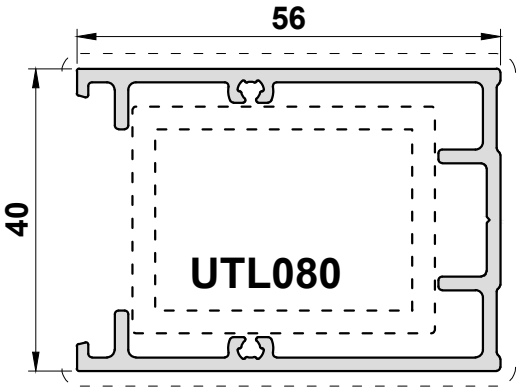

UN510

End Cap: ACUN500

UN501
UN511 Cover Cap

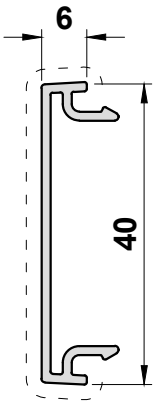

UN511
Reinforcement Profile

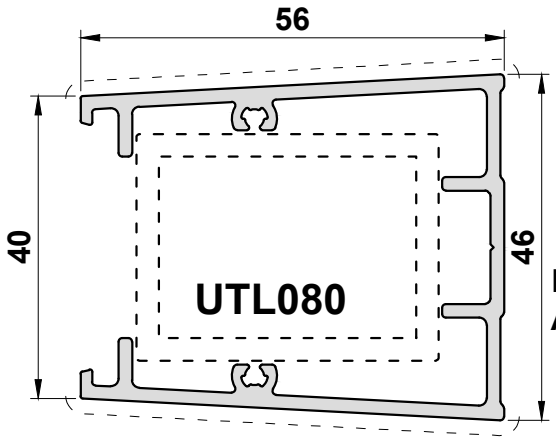

UN511

End Cap: ACUN501

UTL080
Reinforcement Profile

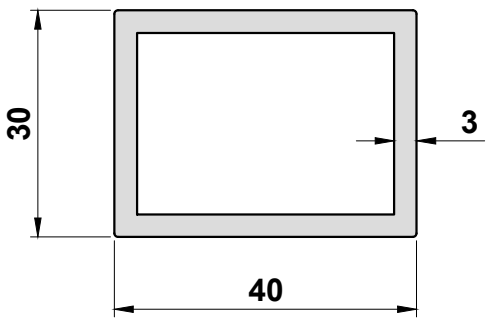

Scale 1:1

Primary Visible Side - - - - - - - - - - - - - - - - - Secondary Visible Side — · — · — · — · — · — · —

VL59
Link Rod

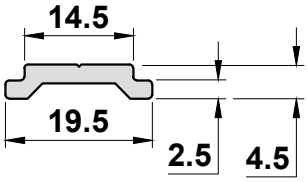

VR023A
PVC Profile

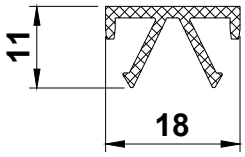

VL60
Link Rod

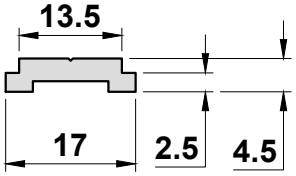

VL72
Weather Drip

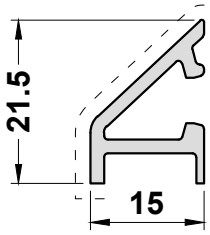

End Cap ACVL059
Rivet ACVL061

VL75
Concealed Coupler
PVC

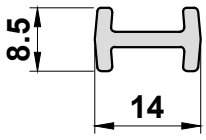

Scale 1:1

Primary Visible Side – – – – – – – – – – – – – – – – – Secondary Visible Side —·—·—·—·—·—·—·—

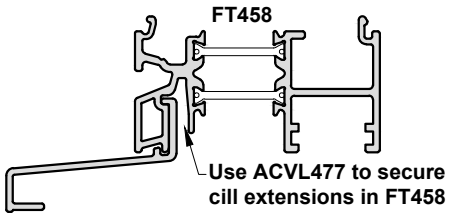

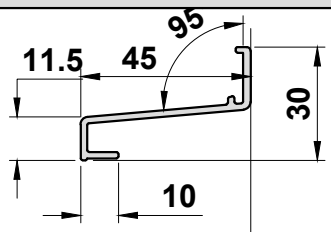

VL479
Cill Extension

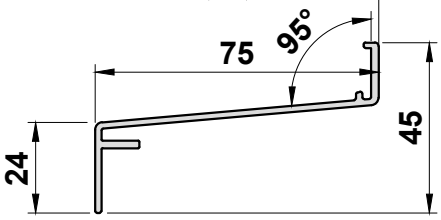

VL480
Cill Extension

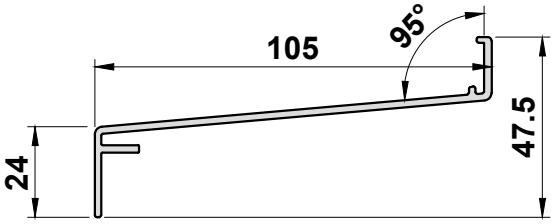

VL481
Cill Extension

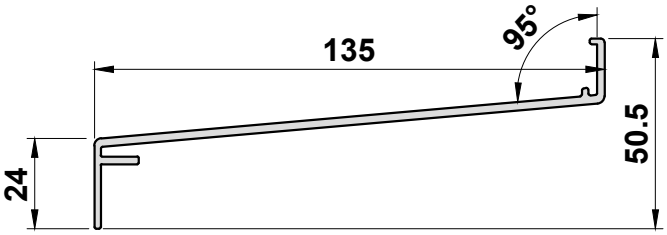

VL482
Cill Extension

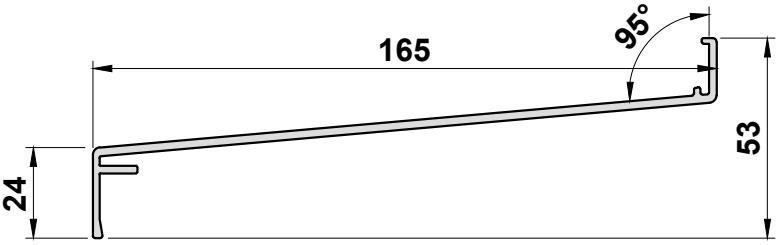

VL483
Cill Extension

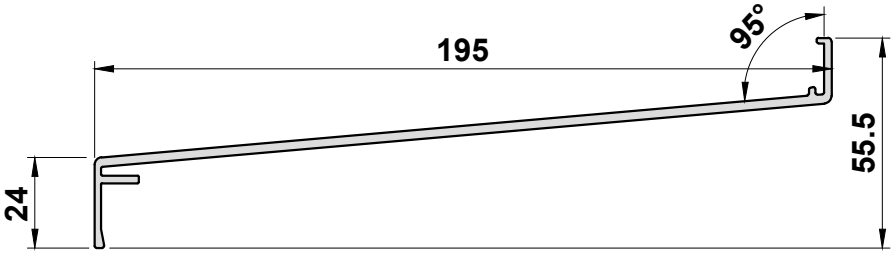

VL484
Cill Extension

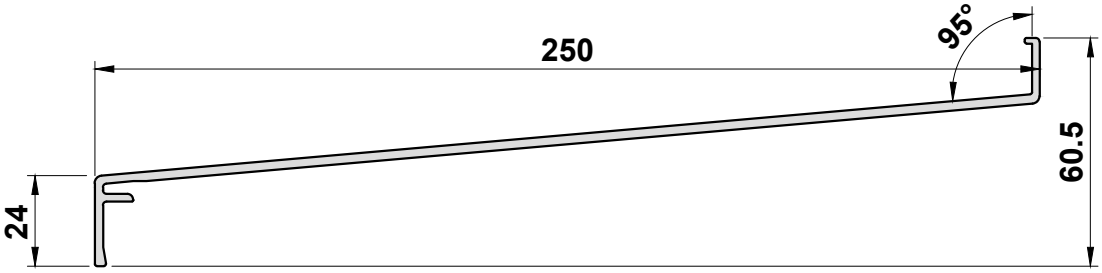

VL486
Cill Extension

Scale 1:1

Primary Visible Side - - - - - - - - - - - - - - - - - - Secondary Visible Side — · — · — · — · — · — · — · —

This page is intentionally left blank

Scale 1:1

Section B

Eco Futural
Accessories
Photos & Drawings

This page is intentionally left blank

ACCESSORIES : PHOTOS & DRAWINGS

Image	Part Code	Pack	Unit	Application	Colour
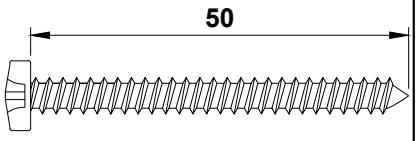	**ACDR052** **No.10 x 50 S/S Self Tapping Pan Head Screw**	**200**	**pack**	**ETC048 ETC655**	MF SA KL HP SSC SMC PC W Z
	**ACDV201** **Brush fitting under door**	**3**	**m**	**FT057**	MF SA KL HP SSC SMC PC W Z
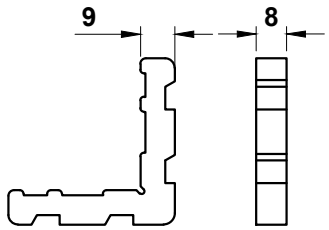	**ACEF010A** **Crimping corner for outside chamber**	**20**	**pack**	**EF110 EF044**	MF SA KL HP SSC SMC PC W Z
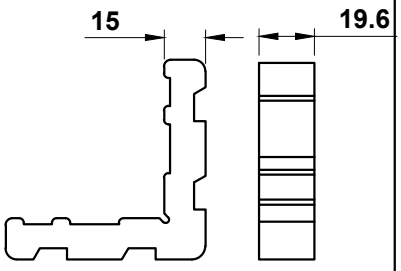	**ACEF010B** **Crimping cleat for inside chamber**	**24**	**pack**	**EF110**	MF SA KL HP SSC SMC PC W Z
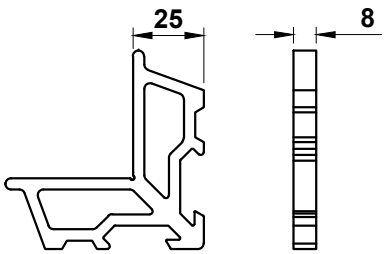	**ACEF011A** **Crimping cleat for outside (small) chamber**	**24**	**pack**	**EF011**	MF SA KL HP SSC SMC PC W Z

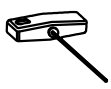



MF	**= Mill Finish**	**W**	**= White**
SA	**= Silver Anodised**	**Z**	**= Black**
KL	**= Basic Colour**		
HP	**= Special Colour**		
SSC	**= Smooth Satin Chrome**		
SMC	**= Smokey Chrome**		
PC	**= Polished Chrome**		

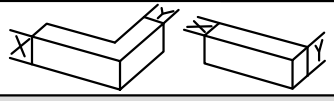

ACCESSORIES : PHOTOS & DRAWINGS

Image	Part Code	Pack	Unit	Application	Colour
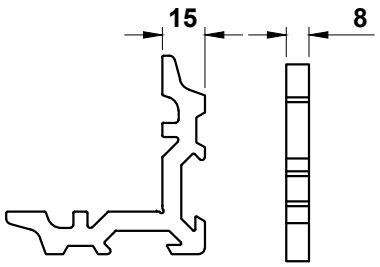	**ACEF013A** **Crimping cleat for outside chamber**	**24** **OR** **1**	**pack** **each**	**EF110**	MF SA KL HP SSC SMC PC W Z
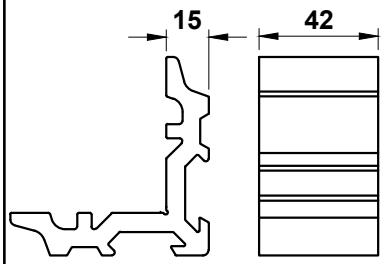	**ACEF019A** **Crimping corner for outside chamber**	**24**	**pack**	**EF019**	MF SA KL HP SSC SMC PC W Z
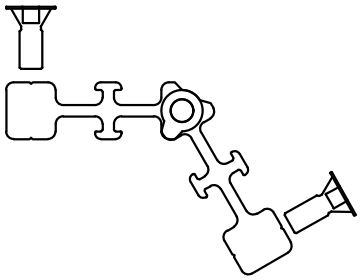	**ACEF021B** **Variable angle bracket for inside chamber**	**1**	**each**	**EF110**	MF SA KL HP SSC SMC PC W Z
	**ACEF025A** **Connecting bracket for outside chamber**	**10**	**pack**	**EF030**	MF SA KL HP SSC SMC PC W Z
	**ACEF025B** **Connecting bracket for inside chamber**	**10**	**pack**	**EF035** **EF039**	MF SA KL HP SSC SMC PC W Z





MF	**= Mill Finish**	**W**	**= White**
SA	**= Silver Anodised**	**Z**	**= Black**
KL	**= Basic Colour**		
HP	**= Special Colour**		
SSC	**= Smooth Satin Chrome**		
SMC	**= Smokey Chrome**		
PC	**= Polished Chrome**		

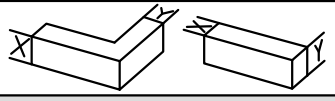

ACCESSORIES : PHOTOS & DRAWINGS

Image	Part Code	Pack	Unit	Application	Colour
	**ACEF026A** **Connecting bracket for outside chamber**	**10**	**pack**	**EF031**	MF SA KL HP SSC SMC PC W Z
	**ACEF027A** **Crimping bracket for outside chamber**	**10**	**pack**	**EF032**	MF SA KL HP SSC SMC PC W Z
	**ACEF027B** **Crimping bracket for inside chamber**	**10**	**pack**	**EF032**	MF SA KL HP SSC SMC PC W Z
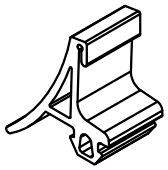	**ACEF030A** **Central gasket outward** **(Pre-formed corners = ACEF031A)**	**100**	**m**	**EF010** **EF011** **EF019** **EF110** **EF040** **EF03***	MF SA KL HP SSC SMC PC W Z
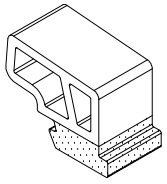	**ACEF030B** **Central gasket inward**	**100**	**m**	**EF010** **EF011** **EF019** **EF110** **EF040** **EF03***	MF SA KL HP SSC SMC PC W Z

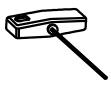

T-BARS
ACVG65=2.5mm
ACVG66=3.0mm
ACVL150=4.0mm



Screw (Grub)

MF = Mill Finish
SA = Silver Anodised
KL = Basic Colour
HP = Special Colour
SSC = Smooth Satin Chrome
SMC = Smokey Chrome
PC = Polished Chrome
W = White
Z = Black

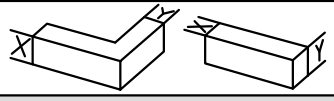

ACCESSORIES : PHOTOS & DRAWINGS

Image	Part Code	Pack	Unit	Application	Colour
	**ACEF031A** **Corner for central gasket ACEF030A**	**1**	**each**	**EF010 EF011 EF019 EF110 EF040 EF03***	MF SA KL HP SSC SMC PC W Z
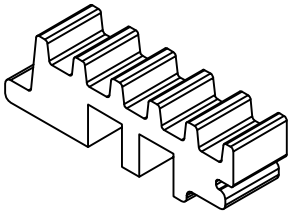	**ACEF039A** **Preformed Insulation glazing strip for outer frame**	**50**	**m**	**EF010 EF011 EF030 EF031 EF032 EF033**	MF SA KL HP SSC SMC PC W Z
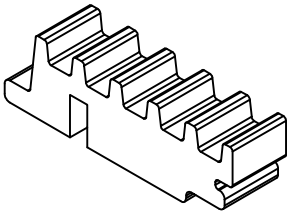	**ACEF039B** **Preformed insulation glazing strip for vents**	**50**	**m**	**EF020 EF023**	MF SA KL HP SSC SMC PC W Z
	**ACEF043** **Insulation strip** **26 x 10**	**100**	**m**	**EF045**	MF SA KL HP SSC SMC PC W Z
	**ACEF044** **Insulation strip** **20 x 10**	**100**	**m**	**EF120**	MF SA KL HP SSC SMC PC W Z





MF = Mill Finish
SA = Silver Anodised
KL = Basic Colour
HP = Special Colour
SSC = Smooth Satin Chrome
SMC = Smokey Chrome
PC = Polished Chrome
W = White
Z = Black

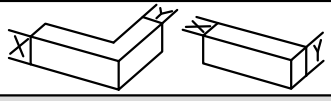

ACCESSORIES : PHOTOS & DRAWINGS

Image	Part Code	Pack	Unit	Application	Colour	
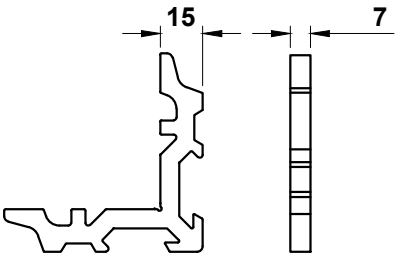	**ACEF045A** **Crimping corner cleat for outside chamber**	**24**	**pack**	**EF045**	MF SA KL HP SSC SMC PC W Z	
	**ACEF055** **Sealing double casement 5mm gap (black / white)**	**1**	**each**	**EF040**	MF SA KL HP SSC SMC PC W Z	 ✓ ✓
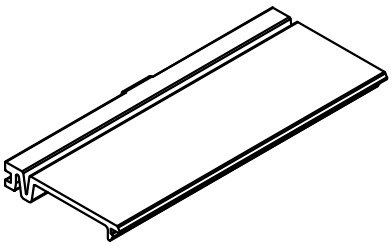	**ACEF057** **Glazing support**	**100**	**pack**	**EF01*** **EF02*** **EF03*** **EF044**	MF SA KL HP SSC SMC PC W Z	
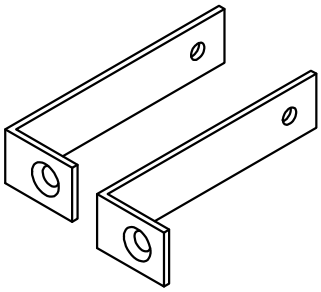	**ACEF094** **Mounting kit for EF094**	**1**	**pair**	**EF094**	MF SA KL HP SSC SMC PC W Z	
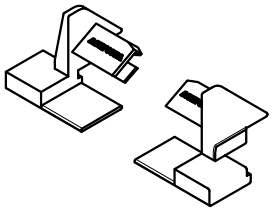	**ACEF095** **End piece for EF095**	**1**	**set**	**EF095**	MF SA KL HP SSC SMC PC W Z	 ✓

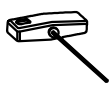



MF = Mill Finish
SA = Silver Anodised
KL = Basic Colour
HP = Special Colour
SSC = Smooth Satin Chrome
SMC = Smokey Chrome
PC = Polished Chrome
W = White
Z = Black

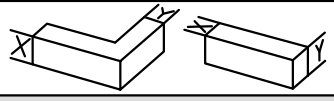

ACCESSORIES : PHOTOS & DRAWINGS

Image	Part Code	Pack	Unit	Application	Colour	
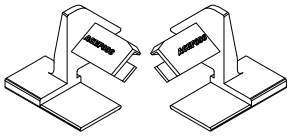	**ACEF096** **End piece double casement window for EF095**	**1**	**set**	**EF095**	MF SA KL HP SSC SMC PC W Z	 ✓
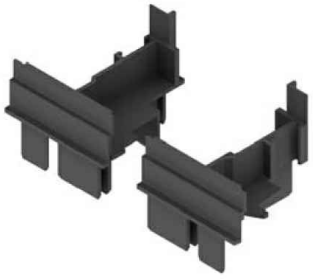	**ACEF097** **Sealing double casement window with EF094**	**1**	**set**	**EF094**	MF SA KL HP SSC SMC PC W Z	 ✓
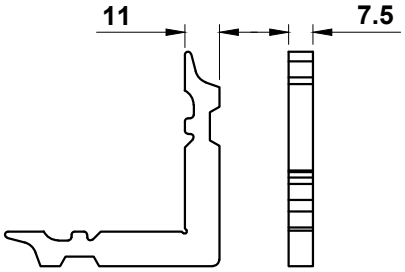	**ACEF110A** **Crimping corner for outside chamber**	**24**	**pack**	**EF030**	MF SA KL HP SSC SMC PC W Z	
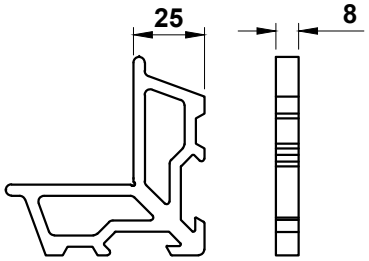	**ACEF111A** **Crimping corner for outside chamber**	**24**	**pack**	**EF031**	MF SA KL HP SSC SMC PC W Z	
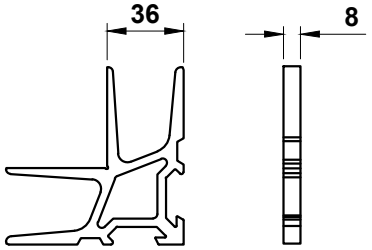	**ACEF112A** **Crimping corner for outside chamber**	**24**	**pack**	**EF032**	MF SA KL HP SSC SMC PC W Z	





MF	**= Mill Finish**	**W**	**= White**
SA	**= Silver Anodised**	**Z**	**= Black**
KL	**= Basic Colour**		
HP	**= Special Colour**		
SSC	**= Smooth Satin Chrome**		
SMC	**= Smokey Chrome**		
PC	**= Polished Chrome**		

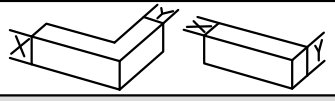

ACCESSORIES : PHOTOS & DRAWINGS

Image	Part Code	Pack	Unit	Application	Colour
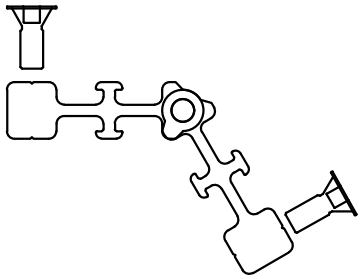	**ACEF120A** **Variable angle corner for outside chamber**	**1**	**each**	**EF010**	MF SA KL HP SSC SMC PC W Z
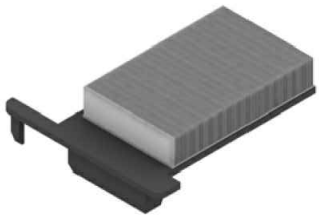	**ACEF202L** **End piece left**	**1**	**each**	**EF045**	MF SA KL HP SSC SMC PC W Z
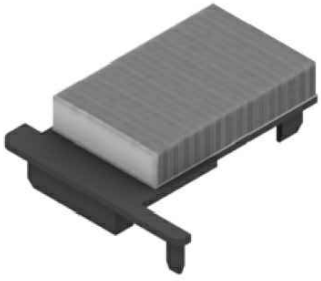	**ACEF202R** **End piece right**	**1**	**each**	**EF045**	MF SA KL HP SSC SMC PC W Z
	**ACEF203L** **Finishing piece left**	**1**	**each**	**EF045**	MF SA KL HP SSC SMC PC W Z ✓
	**ACEF203R** **Finishing piece right**	**1**	**each**	**EF045**	MF SA KL HP SSC SMC PC W Z ✓



T-BARS
ACVG65=2.5mm
ACVG66=3.0mm
ACVL150=4.0mm



Screw (Grub)

MF = Mill Finish
SA = Silver Anodised
KL = Basic Colour
HP = Special Colour
SSC = Smooth Satin Chrome
SMC = Smokey Chrome
PC = Polished Chrome
W = White
Z = Black

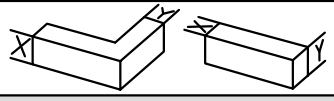

ACCESSORIES : PHOTOS & DRAWINGS

Image	Part Code	Pack	Unit	Application	Colour
	**ACEF300** **Base rubber**	**25**	**m**		MF SA KL HP SSC SMC PC W Z
	**ACEF350** **Weathering gasket 300mm**	**20**	**m**	**EF010** **EF011**	MF SA KL HP SSC SMC PC W Z
	**ACEF400** **Preformed insulating strip**	**2**	**m**	**EF010**	MF SA KL HP SSC SMC PC W Z
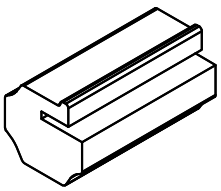	**ACEF401** **Preformed insulating strip**	**2**	**m**	**EF011** **EF019** **EF031** **EF034** **EF036**	MF SA KL HP SSC SMC PC W Z
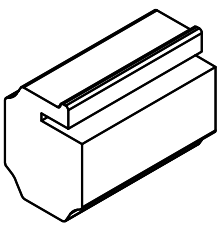	**ACEF402** **Preformed insulating strip**	**2**	**m**	**EF032**	MF SA KL HP SSC SMC PC W Z

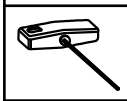



MF = Mill Finish **W = White**
SA = Silver Anodised **Z = Black**
KL = Basic Colour
HP = Special Colour
SSC = Smooth Satin Chrome
SMC = Smokey Chrome
PC = Polished Chrome

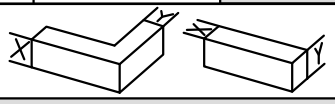

ACCESSORIES : PHOTOS & DRAWINGS

Image	Part Code	Pack	Unit	Application	Colour	
	**ACEF410** **Preformed insulating strip**	**2**	**m**	**EF020**	MF	
					SA	
					KL	
					HP	
					SSC	
					SMC	
					PC	
					W	
					Z	
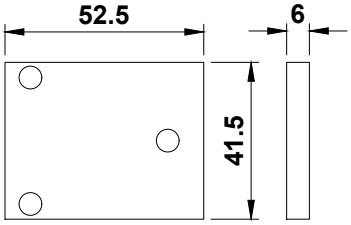	**ACEF434** **End Pad**	**50**	**pack**	**EF434**	MF	
					SA	
					KL	
					HP	
					SSC	
					SMC	
					PC	
					W	
					Z	✓
	**ACEF443** **Closer section for single door**	**1**	**each**	**EF023**	MF	
					SA	
					KL	
					HP	
					SSC	
					SMC	
					PC	
					W	
					Z	✓
	**ACEF444** **Closer section for door**	**1**	**each**	**EF120**	MF	
					SA	
					KL	
					HP	
					SSC	
					SMC	
					PC	
					W	
					Z	✓
	**ACEF470** **Closer section for single door (End Piece)**	**1**	**each**	**EF415** **EF424** **EF414** **EF425**	MF	
					SA	
					KL	
					HP	
					SSC	
					SMC	
					PC	
					W	
					Z	✓



T-BARS
ACVG65=2.5mm
ACVG66=3.0mm
ACVL150=4.0mm



Screw (Grub)

MF	**= Mill Finish**	**W**	**= White**
SA	**= Silver Anodised**	**Z**	**= Black**
KL	**= Basic Colour**		
HP	**= Special Colour**		
SSC	**= Smooth Satin Chrome**		
SMC	**= Smokey Chrome**		
PC	**= Polished Chrome**		

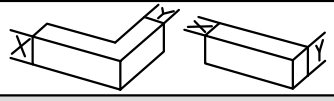

ACCESSORIES : PHOTOS & DRAWINGS

Image	Part Code	Pack	Unit	Application	Colour	
	**ACEF471** **Closer section for single door**	**1**	**each**	**EF455** **EF424**	MF SA KL HP SSC SMC PC W Z	 ✓
	**ACEF472A** **Closer section for double door (End Piece)**	**1**	**each**	**EF414** **EF454** **EF425**	MF SA KL HP SSC SMC PC W Z	 ✓
	**ACEF472B** **Closer section for double door (End Piece)**	**1**	**each**	**EF414** **EF454** **EF425**	MF SA KL HP SSC SMC PC W Z	
	**ACEF473A** **Closer section for double door (End Piece)**	**1**	**each**	**EF415** **EF454** **EF424**	MF SA KL HP SSC SMC PC W Z	
	**ACEF473B** **Closer section for double door (End Piece)**	**1**	**each**	**EF424** **EF425**	MF SA KL HP SSC SMC PC W Z	





MF = Mill Finish **W = White**
SA = Silver Anodised **Z = Black**
KL = Basic Colour
HP = Special Colour
SSC = Smooth Satin Chrome
SMC = Smokey Chrome
PC = Polished Chrome

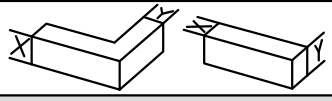

ACCESSORIES : PHOTOS & DRAWINGS

Image	Part Code	Pack	Unit	Application	Colour
	**ACEF480** **Self operating threshold 730mm**	**1**	**each**	**EF424 EF425**	MF SA KL HP SSC SMC PC W Z
	**ACEF481** **Self operating threshold 830mm**	**1**	**each**	**EF424 EF425**	MF SA KL HP SSC SMC PC W Z
	**ACEF482** **Self operating threshold 930mm**	**1**	**each**	**EF424 EF425**	MF SA KL HP SSC SMC PC W Z
	**ACEF483** **Self operating threshold 1030mm**	**1**	**each**	**EF424 EF425**	MF SA KL HP SSC SMC PC W Z
	**ACEF484** **Self operating threshold 1130mm**	**1**	**each**	**EF424 EF425**	MF SA KL HP SSC SMC PC W Z



T-BARS
ACVG65=2.5mm
ACVG66=3.0mm
ACVL150=4.0mm



Screw (Grub)

MF = Mill Finish
SA = Silver Anodised
KL = Basic Colour
HP = Special Colour
SSC = Smooth Satin Chrome
SMC = Smokey Chrome
PC = Polished Chrome
W = White
Z = Black

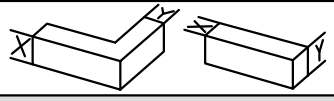

ACCESSORIES : PHOTOS & DRAWINGS

Image	Part Code	Pack	Unit	Application	Colour	
	**ACEF485** **Self operating threshold 1230mm**	**1**	**each**	**EF424** **EF425**	MF SA KL HP SSC SMC PC W Z	
	**ACEF693** **End piece threshold**	**1**	**each**	**EF492** **EF493**	MF SA KL HP SSC SMC PC W Z	 ✓
	**ACEF694** **End piece threshold**	**1**	**each**	**EF492** **EF493**	MF SA KL HP SSC SMC PC W Z	 ✓
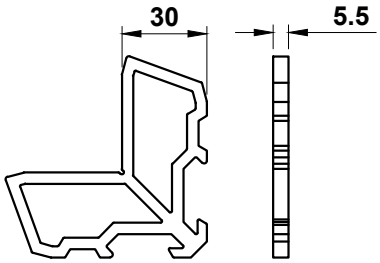	**ACEF810** **Crimping corner for outside chamber**	**24**	**pack**	**EF414** **EF415** **EF424** **EF425**	MF SA KL HP SSC SMC PC W Z	
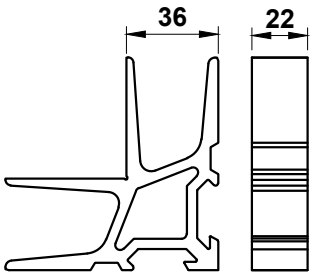	**ACEF812** **Crimping corner for inside chamber**	**24**	**pack**	**EF414** **EF415**	MF SA KL HP SSC SMC PC W Z	





MF = Mill Finish **W = White**
SA = Silver Anodised **Z = Black**
KL = Basic Colour
HP = Special Colour
SSC = Smooth Satin Chrome
SMC = Smokey Chrome
PC = Polished Chrome

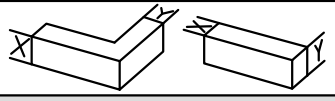

Image	Part Code	Pack	Unit	Application	Colour	
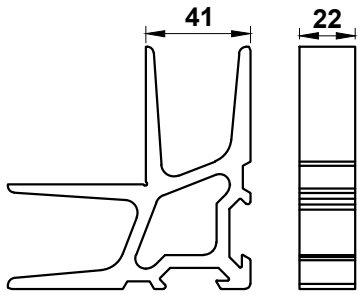	**ACEF814** **Crimping corner for inside chamber**	**24**	**pack**	**EF424** **EF425**	MF SA KL HP SSC SMC PC W Z	
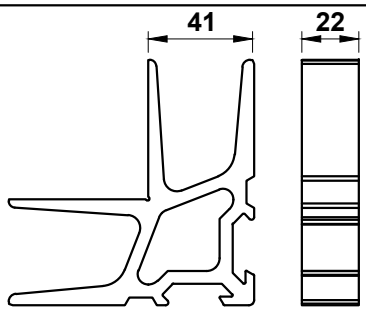	**ACEF816** **Crimping corner for inside chamber**	**24**	**pack**	**EF424** **EF425**	MF SA KL HP SSC SMC PC W Z	
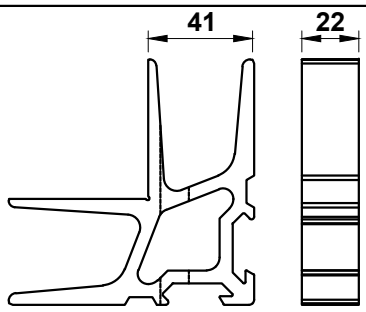	**ACEF817** **Crimping corner (Drilled) for inside chamber**	**24**	**pack**	**EF424** **EF425**	MF SA KL HP SSC SMC PC W Z	
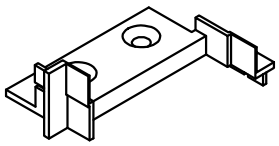	**ACEF854** **Sealing double casement (End Piece)**	**1**	**each**	**EF424** **EF425**	MF SA KL HP SSC SMC PC W Z	✓
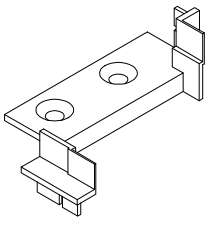	**ACEF855** **Sealing double casement**	**1**	**each**	**EF424** **EF425**	MF SA KL HP SSC SMC PC W Z	✓





MF = Mill Finish
SA = Silver Anodised
KL = Basic Colour
HP = Special Colour
SSC = Smooth Satin Chrome
SMC = Smokey Chrome
PC = Polished Chrome
W = White
Z = Black

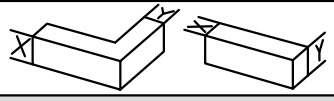

ACCESSORIES : PHOTOS & DRAWINGS

Image	Part Code	Pack	Unit	Application	Colour
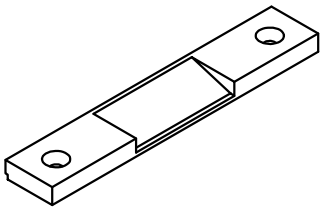	**ACEF860** **Keep guide**	**1**	**each**	**EF414** **EF454**	MF SA KL HP SSC SMC PC W Z ✓
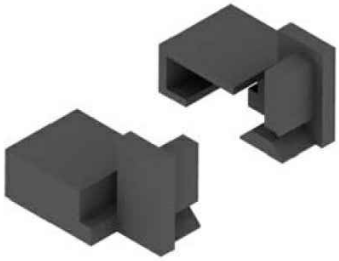	**ACEF872** **End piece**	**1**	**each**	**EF472**	MF SA KL HP SSC SMC PC W Z ✓
	**ACEF891** **Extended bolt lock for double door**	**1**	**each**	**EF424** **EF425**	MF SA KL HP SSC SMC PC W Z
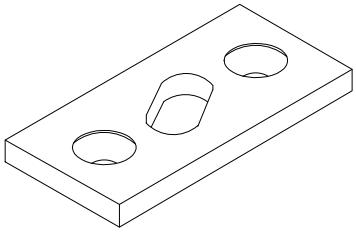	**ACEF892** **Keeper - TOP (Lock Plate)**	**1**	**each**	**EF414** **EF415**	MF SA ✓ KL HP SSC SMC PC W Z
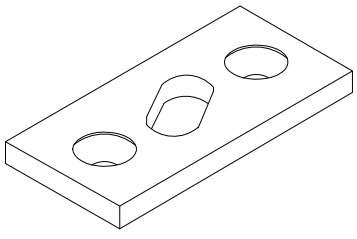	**ACEF894** **Keeper - BOTTOM (Lock Plate)**	**1**	**each**	**EF492** **EF493**	MF SA ✓ KL HP SSC SMC PC W Z

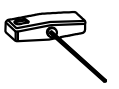



MF = Mill Finish
SA = Silver Anodised
KL = Basic Colour
HP = Special Colour
SSC = Smooth Satin Chrome
SMC = Smokey Chrome
PC = Polished Chrome
W = White
Z = Black

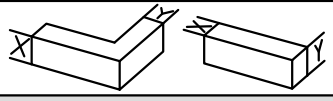

Image	Part Code	Pack	Unit	Application	Colour	
	**ACEF901** **Punch tool for drainage**	**1**	**each**	**EF010** **EF011** **EF020** **EF031** **EF032** **EF035** **EF036**	MF SA KL HP SSC SMC PC W Z	
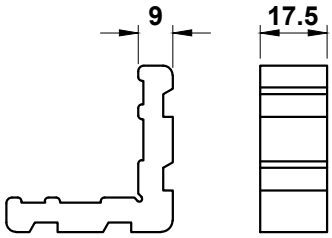	**ACEF910** **Outer Chamber Crimping Cleat**	**24**	**pack**	**EF910**	MF SA KL HP SSC SMC PC W Z	 ✓ ✓
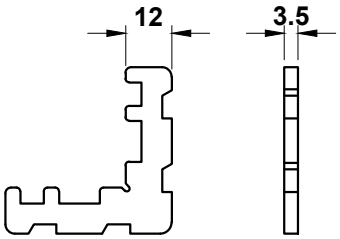	**ACEF911** **Inner Chamber Crimping Cleat**	**24**	**pack**	**EF910**	MF SA KL HP SSC SMC PC W Z	 ✓ ✓
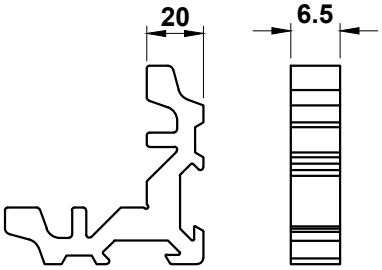	**ACEF924** **Outer Chamber Crimping Cleat**	**24**	**pack**	**EF926**	MF SA KL HP SSC SMC PC W Z	
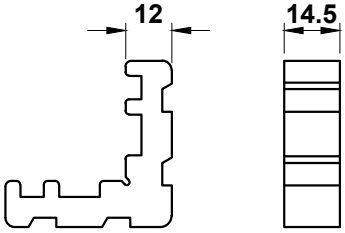	**ACEF925** **Inner Chamber Crimping Cleat**	**24**	**pack**	**EF924** **EF926**	MF SA KL HP SSC SMC PC W Z	

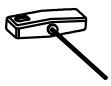



MF = Mill Finish **W = White**
SA = Silver Anodised **Z = Black**
KL = Basic Colour
HP = Special Colour
SSC = Smooth Satin Chrome
SMC = Smokey Chrome
PC = Polished Chrome

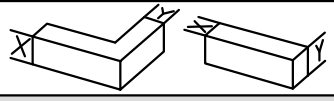

ACCESSORIES : PHOTOS & DRAWINGS

Image	Part Code	Pack	Unit	Application	Colour	
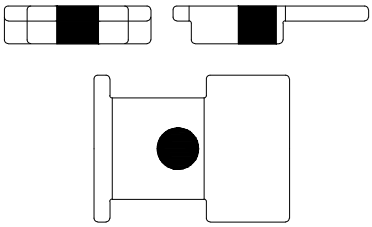	**ACEF931** **PVC Infill Block**	**50**	**pack**		MF SA KL HP SSC SMC PC W Z	
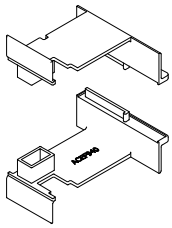	**ACEF940** **End Caps**	**24**	**pack**	**EF948**	MF SA KL HP SSC SMC PC W Z	 ✓
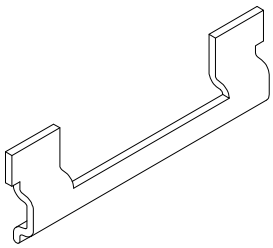	**ACEF943** **Anti-Twist Clip**	**100**	**pack**		MF SA KL HP SSC SMC PC W Z	
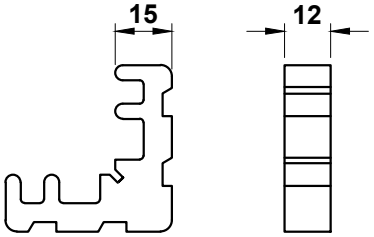	**ACEF945** **Inner Chamber Crimping Cleat**	**24**	**pack**	**EF945**	MF SA KL HP SSC SMC PC W Z	
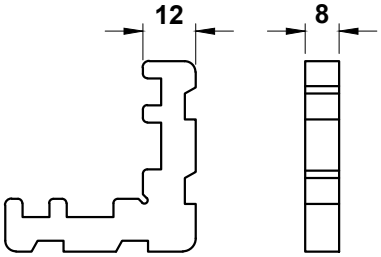	**ACEF946** **Outer Chamber Crimping Cleat**	**24**	**pack**	**EF946**	MF SA KL HP SSC SMC PC W Z	





MF = Mill Finish
SA = Silver Anodised
KL = Basic Colour
HP = Special Colour
SSC = Smooth Satin Chrome
SMC = Smokey Chrome
PC = Polished Chrome
W = White
Z = Black

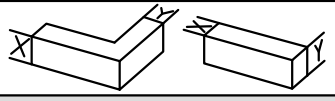

ACCESSORIES : PHOTOS & DRAWINGS

Image	Part Code	Pack	Unit	Application	Colour	
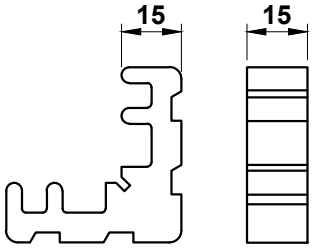	**ACEF947** **Inner Chamber Crimping Cleat**	**24**	**pack**	**EF946**	MF SA KL HP SSC SMC PC W Z	
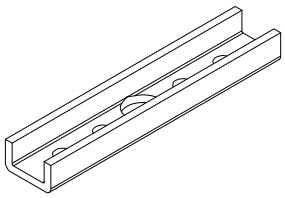	**ACEF948** **Stainless Steel Keep Reinforcement**	**1**	**each**		MF SA KL HP SSC SMC PC W Z	
	**ACEF950** **Drill jig for Variable angle bracket EF010**	**1**	**each**	**EF010**	MF SA KL HP SSC SMC PC W Z	
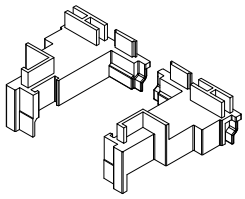	**ACEF957** **End Caps**	**1**	**pair**	**EF040**	MF SA KL HP SSC SMC PC W Z	 ✓ ✓
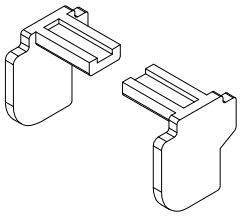	**ACEF958** **End Caps** **Low Threshold Stepped Double Door Kit**	**10**	**pair**		MF SA KL HP SSC SMC PC W Z	 ✓ ✓



T-BARS
ACVG65=2.5mm
ACVG66=3.0mm
ACVL150=4.0mm



Screw (Grub)

MF = Mill Finish
SA = Silver Anodised
KL = Basic Colour
HP = Special Colour
SSC = Smooth Satin Chrome
SMC = Smokey Chrome
PC = Polished Chrome
W = White
Z = Black

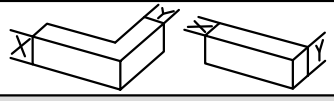

ACCESSORIES : PHOTOS & DRAWINGS

Image	Part Code	Pack	Unit	Application	Colour	
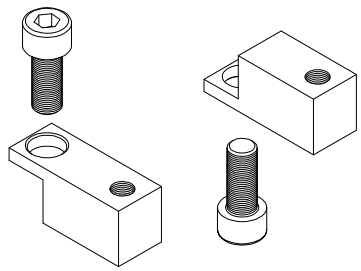	**ACEF961** **Shootbolt Adaptor Block**	**1**	**pair**	**ACGT430**	MF	
					SA	
					KL	
					HP	
					SSC	
					SMC	
					PC	
					W	
					Z	
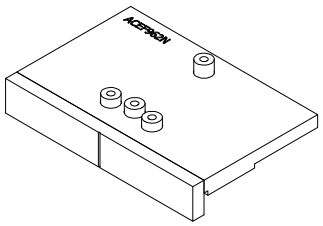	**ACEF962N** **EF930 & EF932 Drill Jig**	**1**	**each**	**EF930** **EF932**	MF	
					SA	
					KL	
					HP	
					SSC	
					SMC	
					PC	
					W	
					Z	
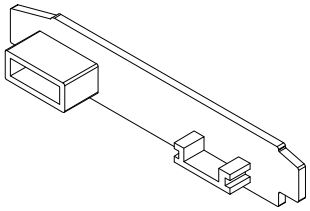	**ACEF964** **Low Threshold End Caps**	**1**	**pair**	**EF993**	MF	
					SA	
					KL	
					HP	
					SSC	
					SMC	
					PC	
					W	
					Z	
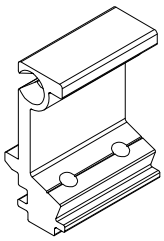	**ACEF965** **Bracket**	**24**	**pack**	**EF993**	MF	
					SA	
					KL	
					HP	
					SSC	
					SMC	
					PC	
					W	
					Z	
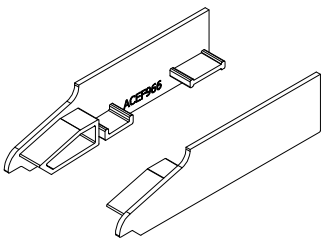	**ACEF966** **EF952 End Cap**	**10**	**pairs**	**EF952**	MF	
					SA	
					KL	
					HP	
					SSC	
					SMC	
					PC	
					W	✓
					Z	✓


T-BARS
ACVG65=2.5mm
ACVG66=3.0mm
ACVL150=4.0mm


Screw (Grub)

MF = Mill Finish
SA = Silver Anodised
KL = Basic Colour
HP = Special Colour
SSC = Smooth Satin Chrome
SMC = Smokey Chrome
PC = Polished Chrome
W = White
Z = Black

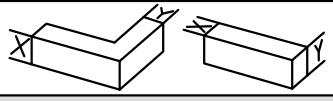

ACCESSORIES : PHOTOS & DRAWINGS

Image	Part Code	Pack	Unit	Application	Colour
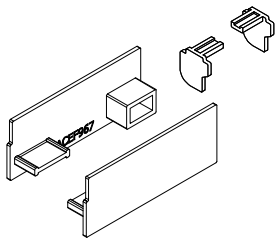	**ACEF967** **EF953 & EF954 End Caps**	**10**	**pairs**	**EF953** **EF954**	MF SA KL HP SSC SMC PC W ✓ Z ✓
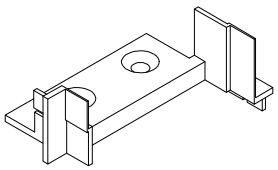	**ACEF968** **Meeting Stile End Cap for EF993 Threshold**	**10**	**pairs**	**EF993**	MF SA KL HP SSC SMC PC W Z
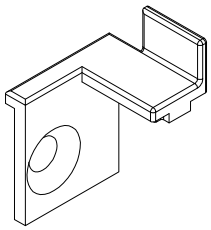	**ACEF969** **End Caps**	**10**	**pairs**	**EF992**	MF SA KL HP SSC SMC PC W Z
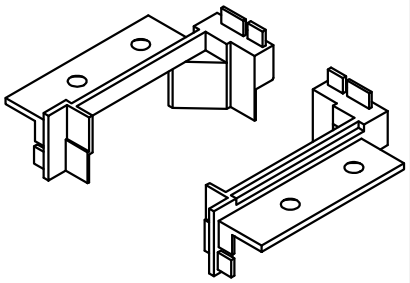	**ACEF970** **End Caps**	**1**	**pair**	**EF425** **EF995**	MF SA KL HP SSC SMC PC W Z
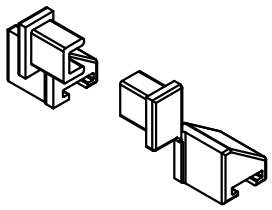	**ACEF971** **End Caps**	**10**	**pairs**	**EF995**	MF SA KL HP SSC SMC PC W Z



T-BARS
ACVG65=2.5mm
ACVG66=3.0mm
ACVL150=4.0mm



Screw (Grub)

MF = Mill Finish
SA = Silver Anodised
KL = Basic Colour
HP = Special Colour
SSC = Smooth Satin Chrome
SMC = Smokey Chrome
PC = Polished Chrome
W = White
Z = Black

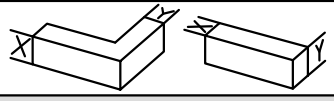

ACCESSORIES : PHOTOS & DRAWINGS

Image	Part Code	Pack	Unit	Application	Colour
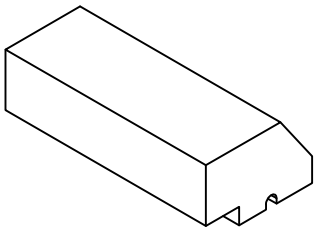	**ACEF976** **Foam Insert**	**100**	**M**	**EF926**	MF SA KL HP SSC SMC PC W Z
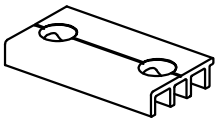	**ACEF982** **Aluminium Guide Block for Smoke Vent**	**100**	**pack**		MF SA KL HP SSC SMC PC W Z
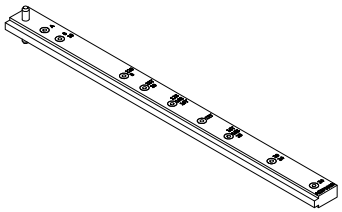	**ACEF990N** **Drill Jig for Standard Hinges**	**1**	**each**		MF SA KL HP SSC SMC PC W Z
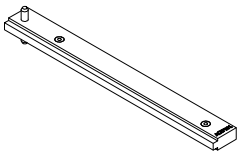	**ACEF991** **Drill Jig for Egress Hinges**	**1**	**each**		MF SA KL HP SSC SMC PC W Z
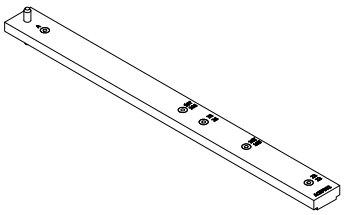	**ACEF992** **Drill Jog for Heavy Duty Hinges**	**1**	**each**		MF SA KL HP SSC SMC PC W Z



T-BARS
ACVG65=2.5mm
ACVG66=3.0mm
ACVL150=4.0mm



Screw (Grub)

MF = Mill Finish
SA = Silver Anodised
KL = Basic Colour
HP = Special Colour
SSC = Smooth Satin Chrome
SMC = Smokey Chrome
PC = Polished Chrome
W = White
Z = Black

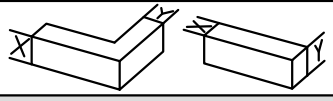

Image	Part Code	Pack	Unit	Application	Colour
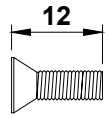	**ACET038** **M4 X 12MM CSK SS**	**100**	**pack**		MF SA KL HP SSC SMC PC W Z
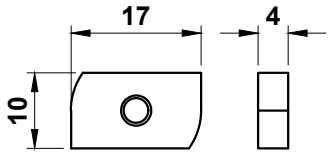	**ACET039** **M4 Channel Fixing**	**50**	**pack**		MF SA KL HP SSC SMC PC W Z
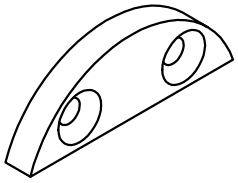	**ACET041** **Cill Nose Bracket**	**100**	**pack**	**ETC451** **ETC452** **ETC457** **ETC458** **ETC479**	MF SA KL HP SSC SMC PC W Z
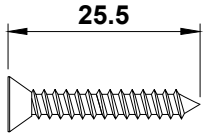	**ACET060** **No. 7 x 25 S/S Self Tapping CSK Screw**	**100**	**pack**		MF SA KL HP SSC SMC PC W Z
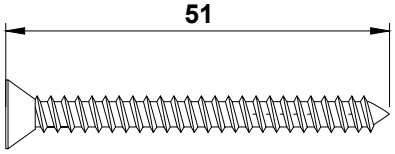	**ACET062** **No.10 x 50 S/S Self Tapping CSK Screw**	**100**	**pack**		MF SA KL HP SSC SMC PC W Z





MF = Mill Finish
SA = Silver Anodised
KL = Basic Colour
HP = Special Colour
SSC = Smooth Satin Chrome
SMC = Smokey Chrome
PC = Polished Chrome
W = White
Z = Black

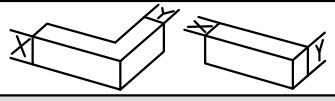

ACCESSORIES : PHOTOS & DRAWINGS

Image	Part Code	Pack	Unit	Application	Colour
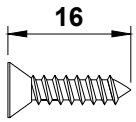	**ACET064** **No.8 x 16 S/S Self Tapping CSK Screw**	**100**	**pack**		MF SA KL HP SSC SMC PC W Z
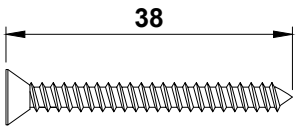	**ACET066** **No.7 x 38 S/S Self Tapping CSK Screw**	**100**	**pack**		MF SA KL HP SSC SMC PC W Z
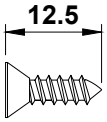	**ACET067** **No. 7 x 13 CSK S/S Self Tapper**	**100**	**pack**		MF SA KL HP SSC SMC PC W Z
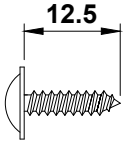	**ACET070** **No.8 x 13 S/S Self Tapping Flange Screw**	**100**	**pack**	**Friction Hinges**	MF SA KL HP SSC SMC PC W Z
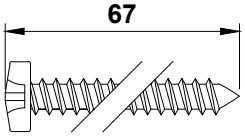	**ACET079** **Pan Head Screw No. 10 x 2 1/2**	**100**	**pack**		MF SA KL HP SSC SMC PC W Z

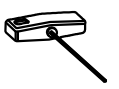


Screw (Grub)

MF	**= Mill Finish**	**W**	**= White**
SA	**= Silver Anodised**	**Z**	**= Black**
KL	**= Basic Colour**		
HP	**= Special Colour**		
SSC	**= Smooth Satin Chrome**		
SMC	**= Smokey Chrome**		
PC	**= Polished Chrome**		

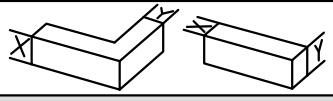

ACCESSORIES : PHOTOS & DRAWINGS

Image	Part Code	Pack	Unit	Application	Colour	
	**ACET080** **Cockspur Handle**	**1**	**each**	**ACET083**	MF SA KL HP SSC SMC PC W Z	 ✓ ✓ ✓
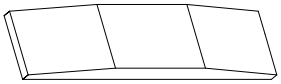	**ACET083** **3mm Wedge**	**100**	**pack**	**ACET080**	MF SA KL HP SSC SMC PC W Z	 ✓ ✓
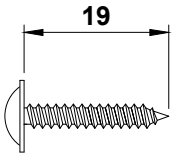	**ACET099** **No.8 x 19 S/S Self Tapping Flange Screw**	**100**	**pack**	**Friction Hinges**	MF SA KL HP SSC SMC PC W Z	
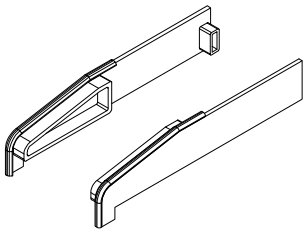	**ACET157** **PVC End Cap**	**10**	**pair**	**ETC457**	MF SA KL HP SSC SMC PC W Z	 ✓ ✓
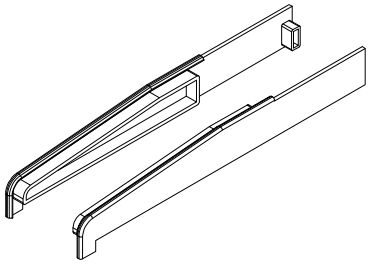	**ACET179** **PVC End Cap**	**10**	**pair**	**ETC479**	MF SA KL HP SSC SMC PC W Z	 ✓ ✓





MF = Mill Finish
SA = Silver Anodised
KL = Basic Colour
HP = Special Colour
SSC = Smooth Satin Chrome
SMC = Smokey Chrome
PC = Polished Chrome
W = White
Z = Black

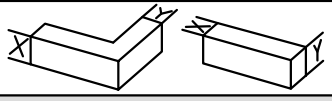

ACCESSORIES : PHOTOS & DRAWINGS

Image	Part Code	Pack	Unit	Application	Colour	
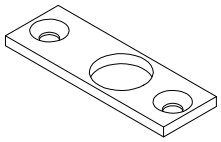	**ACET196** **Adjustable Shootbolt Keep** **Min. Order 500**	**1**	**each**	**ACET195** **ACET176**	MF	
					SA	
					KL	
					HP	
					SSC	
					SMC	
					PC	
					W	✓
					Z	✓
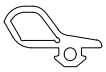	**ACET232** **Threshold Gasket with Upstand**	**100**	**m**		MF	
					SA	
					KL	
					HP	
					SSC	
					SMC	
					PC	
					W	
					Z	
	**ACET234** **Threshold Gasket**	**100**	**m**		MF	
					SA	
					KL	
					HP	
					SSC	
					SMC	
					PC	
					W	
					Z	
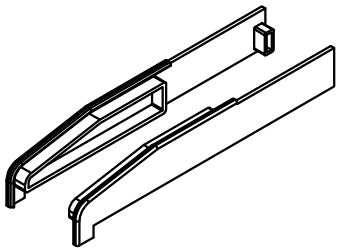	**ACET258** **PVC End Cap**	**10**	**pair**	**ETC458**	MF	
					SA	
					KL	
					HP	
					SSC	
					SMC	
					PC	
					W	✓
					Z	✓
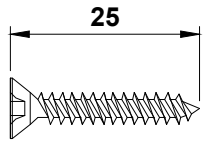	**ACET390** **4.3 x 25mm CSK S/S Polyamide Screw**	**1000**	**pack**		MF	
					SA	
					KL	
					HP	
					SSC	
					SMC	
					PC	
					W	
					Z	





MF = Mill Finish **W = White**
SA = Silver Anodised **Z = Black**
KL = Basic Colour
HP = Special Colour
SSC = Smooth Satin Chrome
SMC = Smokey Chrome
PC = Polished Chrome

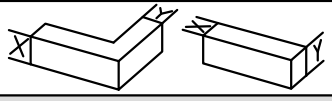

Image	Part Code	Pack	Unit	Application	Colour
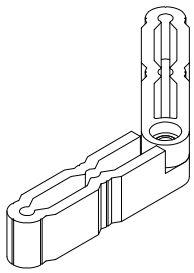	**ACET440** **90° - 180° Variable Angle Cill / Bracket**	**10**	**pack**	**ETC451 ETC452 ETC457 ETC458 ETC479**	MF SA ✓ KL HP SSC SMC PC W Z
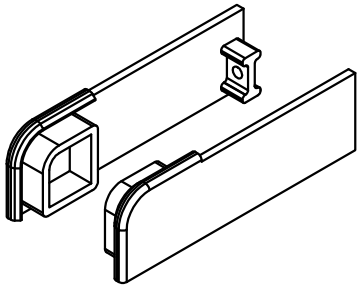	**ACET451** **Cast End Cap**	**1**	**pair**		MF SA KL HP SSC SMC PC W Z
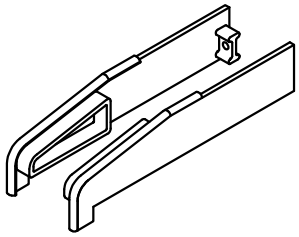	**ACET452** **Cast End Cap**	**1**	**pair**		MF SA KL HP SSC SMC PC W Z
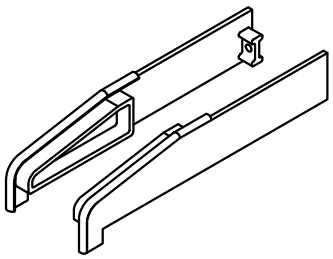	**ACET457** **Cast End Cap**	**1**	**pair**		MF SA KL HP SSC SMC PC W Z
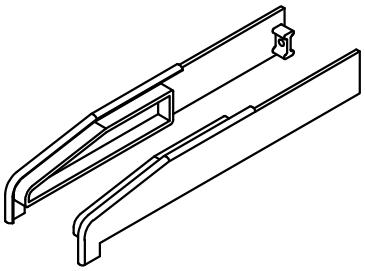	**ACET458** **Cast End Cap**	**1**	**pair**		MF SA KL HP SSC SMC PC W Z





MF = Mill Finish
SA = Silver Anodised
KL = Basic Colour
HP = Special Colour
SSC = Smooth Satin Chrome
SMC = Smokey Chrome
PC = Polished Chrome
W = White
Z = Black

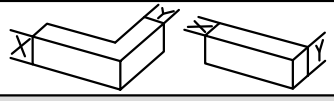

ACCESSORIES : PHOTOS & DRAWINGS

Image	Part Code	Pack	Unit	Application	Colour	
	**ACET461** **Inline Espag Handle with 15mm Spindle**	**1**	**Each**	**ACET861** **ACET862** **ACET863** **ACET864** **ACET865** **ACET866**	MF SA KL HP SSC SMC PC W Z	 ✓ ✓ ✓ ✓ ✓ ✓ ✓
	**ACET466 L/R** **Cranked Espag Handle with 15mm Spindle**	**1**	**Each**	**ACET861** **ACET862** **ACET863** **ACET864** **ACET865** **ACET866**	MF SA KL HP SSC SMC PC W Z	 ✓ ✓ ✓ ✓ ✓ ✓ ✓
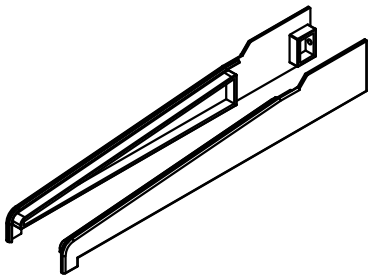	**ACET477** **Cast End Cap**	**1**	**pair**	**ETC477**	MF SA KL HP SSC SMC PC W Z	
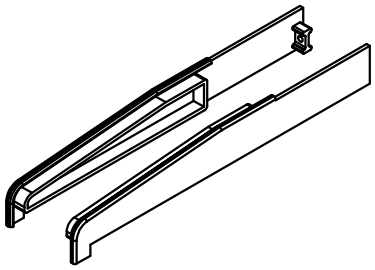	**ACET479** **Cast End Cap**	**1**	**pair**		MF SA KL HP SSC SMC PC W Z	
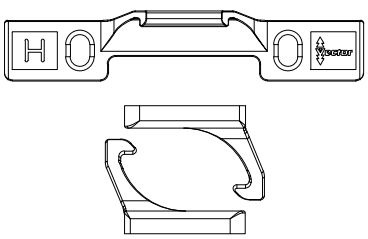	**ACET516** **16mm Cavity Hinge Protector** **4 Per Set (2 pairs)**	**50**	**sets**	**EF926**	MF SA KL HP SSC SMC PC W Z	 ✓ ✓

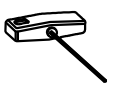



MF	**= Mill Finish**	**W**	**= White**
SA	**= Silver Anodised**	**Z**	**= Black**
KL	**= Basic Colour**		
HP	**= Special Colour**		
SSC	**= Smooth Satin Chrome**		
SMC	**= Smokey Chrome**		
PC	**= Polished Chrome**		

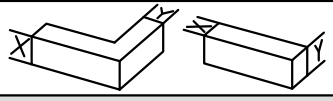

Image	Part Code	Pack	Unit	Application	Colour	
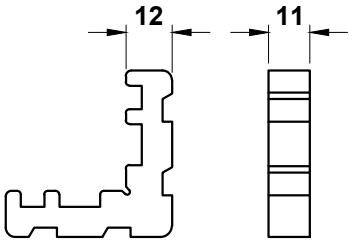	**ACET616** **Inner Chamber Crimping Cleat**	**24**	**pack**	**EF945**	MF SA KL HP SSC SMC PC W Z	
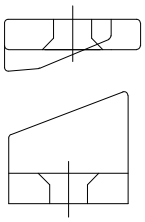	**ACET652** **Pull In Blocks**	**50**	**pairs**		MF SA KL HP SSC SMC PC W Z	 ✓ ✓
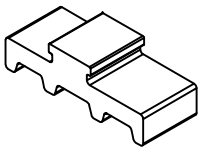	**ACET855** **Foam Insulation**	**100**	**m**		MF SA KL HP SSC SMC PC W Z	
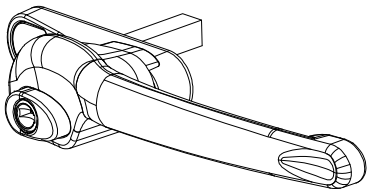	**ACET868** **Espag Handle R/L**	**1**	**each**		MF SA KL HP SSC SMC PC W Z	 ✓ ✓ ✓
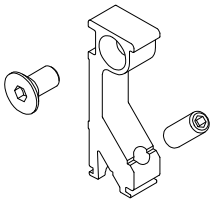 **L/H**	**ACET6130L/R** **Cruciform Bracket**	**10**	**Pairs**	**EF930** **EF932**	MF SA KL HP SSC SMC PC W Z	✓


T-BARS
ACVG65=2.5mm
ACVG66=3.0mm
ACVL150=4.0mm


Screw (Grub)

MF	**= Mill Finish**	**W**	**= White**
SA	**= Silver Anodised**	**Z**	**= Black**
KL	**= Basic Colour**		
HP	**= Special Colour**		
SSC	**= Smooth Satin Chrome**		
SMC	**= Smokey Chrome**		
PC	**= Polished Chrome**		

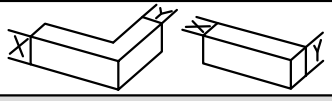

ACCESSORIES : PHOTOS & DRAWINGS

Image	Part Code	Pack	Unit	Application	Colour
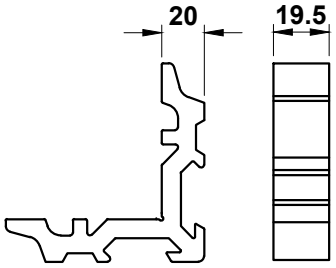	**ACFT010B** **Crimping corner for inside chamber**	**24**	**pack**	**EF010** **EF030**	MF SA KL HP SSC SMC PC W Z
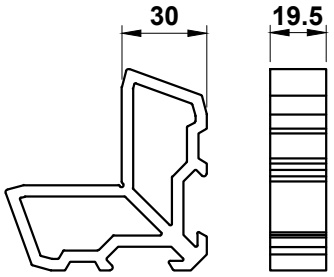	**ACFT012B** **Crimping corner for inside chamber**	**24**	**pack**	**EF011** **EF019** **EF031**	MF SA KL HP SSC SMC PC W Z
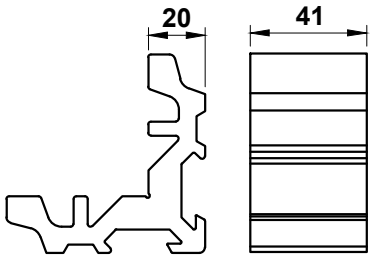	**ACFT014B** **Crimping corner for inside chamber**	**24**	**pack**	**EF032**	MF SA KL HP SSC SMC PC W Z
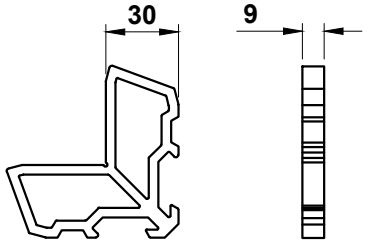	**ACFT016A** **Crimping corner for outside chamber**	**24**	**pack**	**EF022**	MF SA KL HP SSC SMC PC W Z
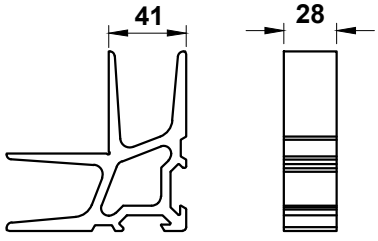	**ACFT016B** **Crimping corner for inside chamber**	**24**	**pack**	**EF022**	MF SA KL HP SSC SMC PC W Z





MF = Mill Finish
SA = Silver Anodised
KL = Basic Colour
HP = Special Colour
SSC = Smooth Satin Chrome
SMC = Smokey Chrome
PC = Polished Chrome
W = White
Z = Black

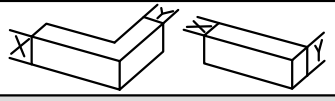

ACCESSORIES : PHOTOS & DRAWINGS

Image	Part Code	Pack	Unit	Application	Colour
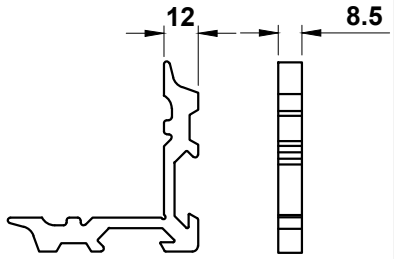	**ACFT020A** **Crimping corner for outside chamber**	**24**	**pack**	**EF020**	MF SA KL HP SSC SMC PC W Z
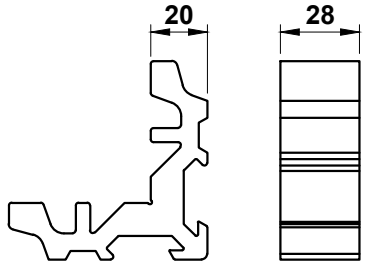	**ACFT020B** **Crimping corner for inside chamber**	**24**	**pack**	**EF020**	MF SA KL HP SSC SMC PC W Z
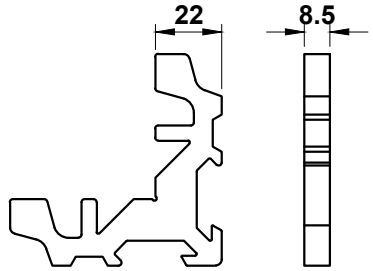	**ACFT022A** **Crimping corner for Outside chamber**	**24**	**pack**	**EF021**	MF SA KL HP SSC SMC PC W Z
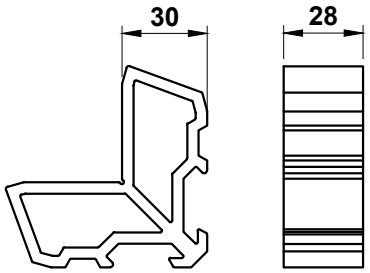	**ACFT022B** **Crimping corner for inside chamber**	**24**	**pack**	**EF021** **EF045**	MF SA KL HP SSC SMC PC W Z
	**ACFT025B** **Transom/Mullion Bracket**	**24**	**pack**	**EF030**	MF SA KL HP SSC SMC PC W Z





MF = Mill Finish
SA = Silver Anodised
KL = Basic Colour
HP = Special Colour
SSC = Smooth Satin Chrome
SMC = Smokey Chrome
PC = Polished Chrome
W = White
Z = Black

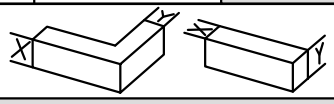

ACCESSORIES : PHOTOS & DRAWINGS

Image	Part Code	Pack	Unit	Application	Colour
	**ACFT026B** **Transom/Mullion Bracket**	**24**	**pack**	**EF031**	MF SA KL HP SSC SMC PC W Z
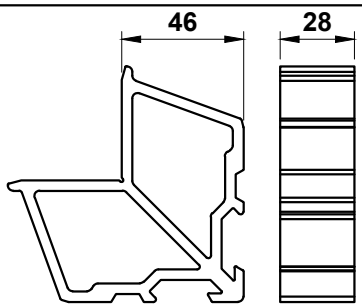	**ACFT027A** **Crimping corner for outside chamber**	**24**	**pack**	**EF120**	MF SA KL HP SSC SMC PC W Z
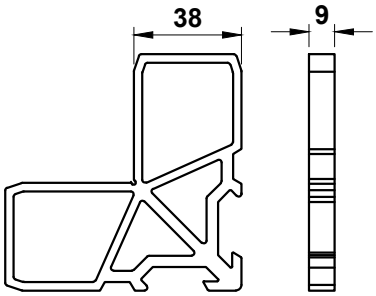	**ACFT027B** **Crimping corner for inside chamber**	**24**	**pack**	**EF120**	MF SA KL HP SSC SMC PC W Z
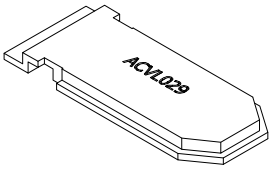	**ACFT029-5000** **Anti-twist clip** **Order ACVL029 for single quantities**	**5000** **1**	**pack** **or** **each**		MF SA KL HP SSC SMC PC W Z
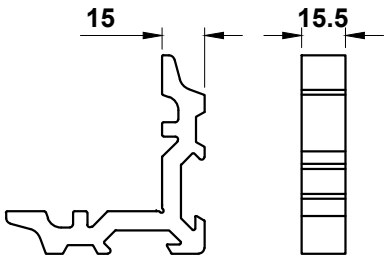	**ACFT044A** **Crimping corner for outside chamber**	**24**	**pack**	**EF044**	MF SA KL HP SSC SMC PC W Z

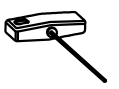



MF	**= Mill Finish**	**W**	**= White**
SA	**= Silver Anodised**	**Z**	**= Black**
KL	**= Basic Colour**		
HP	**= Special Colour**		
SSC	**= Smooth Satin Chrome**		
SMC	**= Smokey Chrome**		
PC	**= Polished Chrome**		

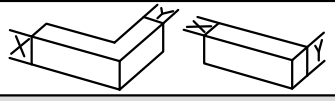

ACCESSORIES : PHOTOS & DRAWINGS

Image	Part Code	Pack	Unit	Application	Colour
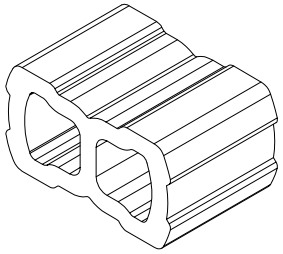	**ACFT075** **Coupling gasket**	**50**	**m**		MF SA KL HP SSC SMC PC W Z
	**ACFT116B** **Variable angle bracket for inside chamber**	**48** **1**	**pack** **or** **each**	**EF010**	MF SA KL HP SSC SMC PC W Z
	**ACFT117B** **Variable angle bracket for inside chamber**	**48** **1**	**pack** **or** **each**	**EF011**	MF SA KL HP SSC SMC PC W Z
	**ACFT120A** **Variable angle bracket for outside chamber**	**48**	**pack**	**EF020**	MF SA KL HP SSC SMC PC W Z
	**ACFT120B** **Variable angle bracket for outside chamber**	**48**	**pack**	**EF020**	MF SA KL HP SSC SMC PC W Z



T-BARS
ACVG65=2.5mm
ACVG66=3.0mm
ACVL150=4.0mm



Screw (Grub)

MF = Mill Finish
SA = Silver Anodised
KL = Basic Colour
HP = Special Colour
SSC = Smooth Satin Chrome
SMC = Smokey Chrome
PC = Polished Chrome
W = White
Z = Black

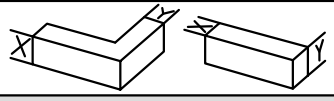

ACCESSORIES : PHOTOS & DRAWINGS

Image	Part Code	Pack	Unit	Application	Colour
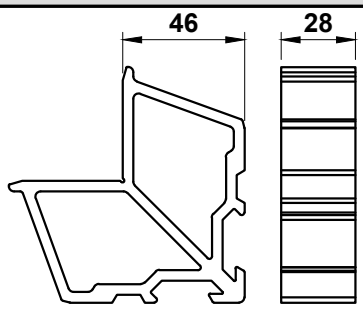	**ACFT128A** **Mechanical Corner Cleat for Outside Chamber**	**24**	**pack**	**EF120**	MF SA KL HP SSC SMC PC W Z
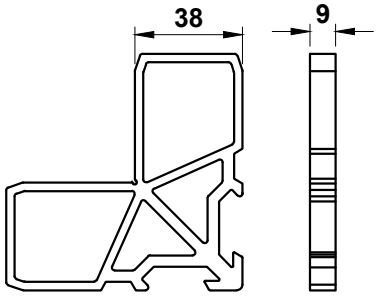	**ACFT128B** **Mechanical Corner Cleat for Inside Chamber**	**24**	**pack**	**EF120**	MF SA KL HP SSC SMC PC W Z
	**ACFT146** **Self operating threshold 710mm**	**1**	**each**	**EF023 EF120**	MF ✓ SA KL HP SSC SMC PC W Z
	**ACFT147** **Self operating threshold 835mm**	**1**	**each**	**EF023 EF120**	MF ✓ SA KL HP SSC SMC PC W Z
	**ACFT148** **Self operating threshold 960mm**	**1**	**each**	**EF023 EF120**	MF ✓ SA KL HP SSC SMC PC W Z


T-BARS
ACVG65=2.5mm
ACVG66=3.0mm
ACVL150=4.0mm


Screw (Grub)

MF = Mill Finish
SA = Silver Anodised
KL = Basic Colour
HP = Special Colour
SSC = Smooth Satin Chrome
SMC = Smokey Chrome
PC = Polished Chrome
W = White
Z = Black

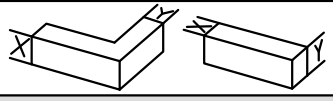

ACCESSORIES : PHOTOS & DRAWINGS

Image	Part Code	Pack	Unit	Application	Colour	
	**ACFT149** **Self operating threshold 1085mm**	**1**	**each**	**EF023** **EF120**	MF	✓
					SA	
					KL	
					HP	
					SSC	
					SMC	
					PC	
					W	
					Z	
	**ACFT150** **Self operating threshold 1210mm**	**1**	**each**	**EF023** **EF120**	MF	✓
					SA	
					KL	
					HP	
					SSC	
					SMC	
					PC	
					W	
					Z	
	**ACFT399** **Boring Jig 93mm**	**1**	**each**	**ACUN461** **ACUN462** **ACUN466**	MF	
					SA	
					KL	
					HP	
					SSC	
					SMC	
					PC	
					W	
					Z	
	**ACFT512** **Lift-out security**	**1**	**each**	**EF011** **EF023** **EF120**	MF	
					SA	
					KL	
					HP	
					SSC	
					SMC	
					PC	
					W	
					Z	
	**ACFT521** **Handle set for burglary resistance**	**1**	**each**	**EF424** **EF425**	MF	✓
					SA	✓
					KL	✓
					HP	
					SSC	
					SMC	✓
					PC	✓
					W	
					Z	



T-BARS
ACVG65=2.5mm
ACVG66=3.0mm
ACVL150=4.0mm



Screw (Grub)

MF	**= Mill Finish**	**W**	**= White**
SA	**= Silver Anodised**	**Z**	**= Black**
KL	**= Basic Colour**		
HP	**= Special Colour**		
SSC	**= Smooth Satin Chrome**		
SMC	**= Smokey Chrome**		
PC	**= Polished Chrome**		

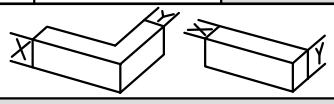

ACCESSORIES : PHOTOS & DRAWINGS

Image	Part Code	Pack	Unit	Application	Colour
	**ACFT522L** **Handle set for burglary resistance**	**1**	**each**	**EF424** **EF425**	MF SA ✓ KL ✓ HP ✓ SSC SMC PC ✓ W ✓ Z
	**ACFT522R** **Handle set for burglary resistance**	**1**	**each**	**EF424** **EF425**	MF SA ✓ KL ✓ HP ✓ SSC SMC PC ✓ W ✓ Z
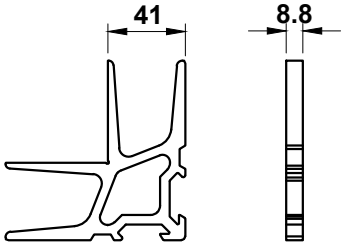	**ACFT612A** **Crimping corner for outside chamber**	**24**	**pack**	**EF023**	MF SA KL HP SSC SMC PC W Z
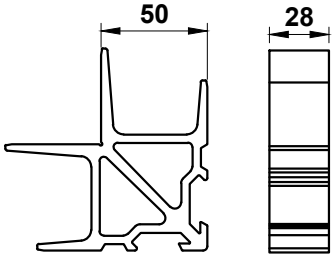	**ACFT612B** **Crimping corner for inside chamber**	**24**	**pack**	**EF023**	MF SA KL HP SSC SMC PC W Z
	**ACFT909** **Drill jig set for connecting T brackets**	**1**	**each**	**EF030** **EF031** **EF032**	MF SA KL HP SSC SMC PC W Z


T-BARS
ACVG65=2.5mm
ACVG66=3.0mm
ACVL150=4.0mm


Screw (Grub)

MF = Mill Finish **W = White**
SA = Silver Anodised **Z = Black**
KL = Basic Colour
HP = Special Colour
SSC = Smooth Satin Chrome
SMC = Smokey Chrome
PC = Polished Chrome

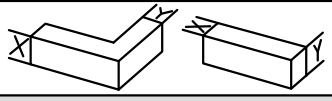

ACCESSORIES : PHOTOS & DRAWINGS

Image	Part Code	Pack	Unit	Application	Colour	
	**ACGSL045** **Drainage Cap**	**1**	**each**		MF SA KL HP SSC SMC PC W Z	 ✓ ✓
	**ACGT430** **Shoot bolt central finger pull**	**1**	**each**	**ACVL127 EF424 EF425**	MF SA KL HP SSC SMC PC W Z	
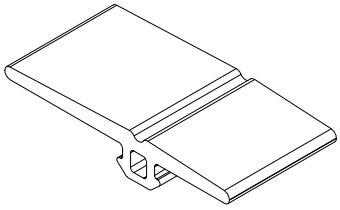	**ACGT463** **Finishing gasket for door**	**100**	**m**		MF SA KL HP SSC SMC PC W Z	
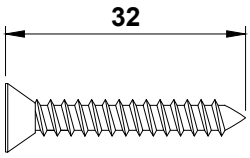	**ACIM062** **No.10 x 1 $\frac{1}{4}$ CSK Stainless Steel Self Tapper**	**100**	**pack**		MF SA KL HP SSC SMC PC W Z	
	**ACMX0030** **Half cylinder 30**	**1**	**each**	**EF023**	MF SA KL HP SSC SMC PC W Z	

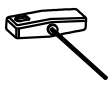



MF	**= Mill Finish**	**W**	**= White**
SA	**= Silver Anodised**	**Z**	**= Black**
KL	**= Basic Colour**		
HP	**= Special Colour**		
SSC	**= Smooth Satin Chrome**		
SMC	**= Smokey Chrome**		
PC	**= Polished Chrome**		

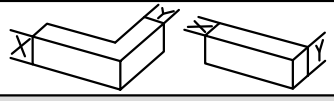

ACCESSORIES : PHOTOS & DRAWINGS

Image	Part Code	Pack	Unit	Application	Colour
	**ACMX0065** **Half cylinder 65**	**1**	**each**	**EF120**	MF SA KL HP SSC SMC PC W Z
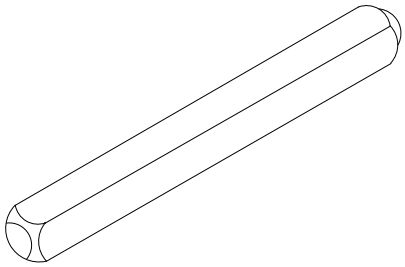	**ACMX008** **Spindle = 60mm**	**1**	**each**		MF SA KL HP SSC SMC PC W Z
	**ACMX01614** **Cylinder 30/65**	**1**	**each**		MF SA KL HP SSC SMC PC W Z
	**ACMX01625** **Half Cylinder 65**	**1**	**each**		MF SA KL HP SSC SMC PC W Z
	**ACMX01627** **Burglary Resistant Cylinder 30/65**	**1**	**each**		MF SA KL HP SSC SMC PC W Z

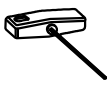

T-BARS
ACVG65=2.5mm
ACVG66=3.0mm
ACVL150=4.0mm



Screw (Grub)

MF = Mill Finish
SA = Silver Anodised
KL = Basic Colour
HP = Special Colour
SSC = Smooth Satin Chrome
SMC = Smokey Chrome
PC = Polished Chrome
W = White
Z = Black

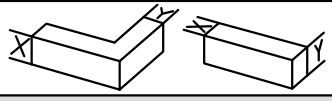

ACCESSORIES : PHOTOS & DRAWINGS

Image	Part Code	Pack	Unit	Application	Colour
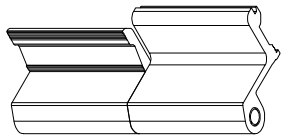	**ACMX040** **Window Hinge**	**10**	**pack**		MF SA KL HP SSC SMC PC W Z
	**ACMX05050** **Bernini Savio Horizontal panic bar** **Grey**	**1**	**each**	**EF414** **EF425**	MF SA KL HP SSC SMC PC W Z
	**ACMX05052** **Bernini Savio Vertical panic bar** **Grey**	**1**	**each**	**EF414** **EF425**	MF SA KL HP SSC SMC PC W Z
	**ACMX05054** **Door handle for panic bar** **Grey**	**1**	**each**		MF SA KL HP SSC SMC PC W Z
	**ACMX05060** **Cellini Savio Horizontal panic bar** **Grey**	**1**	**each**	**EF414** **EF425**	MF SA KL HP SSC SMC PC W Z





MF = Mill Finish
SA = Silver Anodised
KL = Basic Colour
HP = Special Colour
SSC = Smooth Satin Chrome
SMC = Smokey Chrome
PC = Polished Chrome
W = White
Z = Black

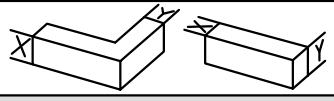

ACCESSORIES : PHOTOS & DRAWINGS

Image	Part Code	Pack	Unit	Application	Colour	
	**ACMX05062** **Cellini Savio Vertical panic bar**	**1**	**each**	**EF414 EF425**	MF	
					SA	
					KL	
					HP	
					SSC	
					SMC	
					PC	
					W	
					Z	
	**ACMX053** **Link Lever With Clips**	**1**	**pair**		MF	
					SA	
					KL	
					HP	
					SSC	
					SMC	
					PC	
					W	
					Z	✓
	**ACMX100** **Door Hinge**	**1**	**each**		MF	
					SA	
					KL	
					HP	
					SSC	
					SMC	
					PC	
					W	
					Z	
	**ACMX102** **Door Hinge** **Max 50kg**	**1**	**each**	**EF023 EF120**	MF	✓
					SA	✓
					KL	✓
					HP	✓
					SSC	
					SMC	
					PC	
					W	✓
					Z	✓
	**ACMX103** **Pin for burglary resistant**	**1**	**each**	**ACMX102**	MF	
					SA	
					KL	
					HP	
					SSC	
					SMC	
					PC	
					W	
					Z	

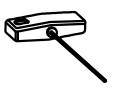



MF = Mill Finish **W = White**
SA = Silver Anodised **Z = Black**
KL = Basic Colour
HP = Special Colour
SSC = Smooth Satin Chrome
SMC = Smokey Chrome
PC = Polished Chrome

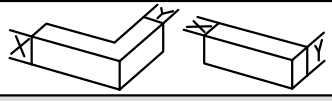

ACCESSORIES : PHOTOS & DRAWINGS

Image	Part Code	Pack	Unit	Application	Colour	
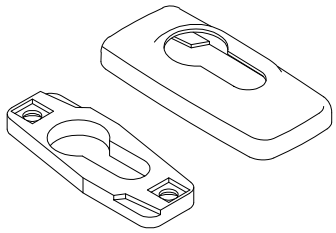	**ACMX208** **Escutcheon (Protection / Shield)**	**1**	**each**		MF SA KL HP SSC SMC PC W Z	✓ ✓ ✓ ✓ ✓ ✓
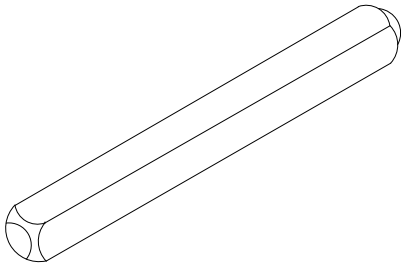	**ACMX209** **Spindle = 110mm**	**1**	**each**		MF SA KL HP SSC SMC PC W Z	
	**ACMX3045** **Half cylinder 30/45**	**1**	**each**		MF SA KL HP SSC SMC PC W Z	
	**ACMX3055** **Cylinder 30/55**	**1**	**each**	**EF424** **EF425**	MF SA KL HP SSC SMC PC W Z	
	**ACMX3065** **Cylinder 30/65**	**1**	**each**	**EF023** **EF120**	MF SA KL HP SSC SMC PC W Z	



T-BARS
ACVG65=2.5mm
ACVG66=3.0mm
ACVL150=4.0mm



Screw (Grub)

MF = Mill Finish
SA = Silver Anodised
KL = Basic Colour
HP = Special Colour
SSC = Smooth Satin Chrome
SMC = Smokey Chrome
PC = Polished Chrome
W = White
Z = Black

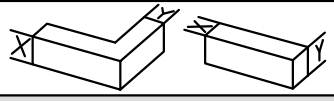

ACCESSORIES : PHOTOS & DRAWINGS

Image	Part Code	Pack	Unit	Application	Colour	
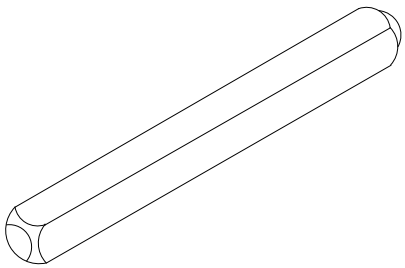	**ACMX309** **Spindle = 130mm**	**1**	**each**	**ACFA120**	MF	
					SA	
					KL	
					HP	
					SSC	
					SMC	
					PC	
					W	
					Z	
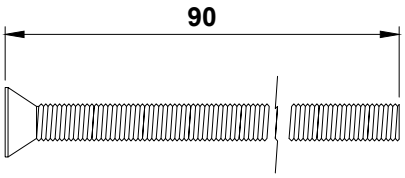	**ACMX862** **DIN965 M5 x 90mm**	**1**	**each**		MF	
					SA	
					KL	
					HP	
					SSC	
					SMC	
					PC	
					W	
					Z	
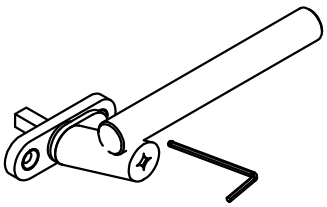	**ACSM022SS L/R** **15mm Spindle Espag Handle.** **Spindle & fixings provided** **Includes M4 Long Ball Point Allen Key for locking**	**1**	**each**	**ACET861** **ACET862** **ACET863** **ACET864** **ACET865** **ACET866**	MF	
					SA	
					KL	
					HP	
					SSC	
					SMC	
					PC	
					W	
					Z	
	**ACSP906** **Drill jig for Variable angle bracket**	**1**	**each**		MF	
					SA	
					KL	
					HP	
					SSC	
					SMC	
					PC	
					W	
					Z	
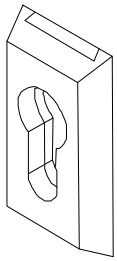	**ACSZ400** **Safety Lock Plate** **Door Handle - External**	**1**	**each**		MF	
					SA	✓
					KL	✓
					HP	✓
					SSC	
					SMC	
					PC	
					W	✓
					Z	✓





MF = Mill Finish **W = White**
SA = Silver Anodised **Z = Black**
KL = Basic Colour
HP = Special Colour
SSC = Smooth Satin Chrome
SMC = Smokey Chrome
PC = Polished Chrome

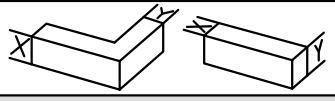

Image	Part Code	Pack	Unit	Application	Colour
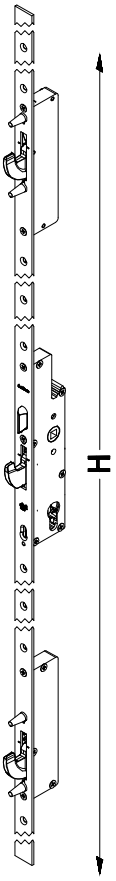	**ACSZ510** **Multi-Point Door Lock** **H = 2170mm** **Requires:** **1xACSZ650L/R** **1xACSZ651** **----------OR----------** **1xACSZ680L/R**	**1**	**each**		MF SA KL HP SSC SMC PC W Z
	ACSZ511 **Multi-Point Door Lock** **H = 1895mm** **Requires:** **1xACSZ650L/R** **1xACSZ651** **----------OR----------** **1xACSZ511** **1xACSZ681**	**1**	**each**	**EF023** **EF120**	
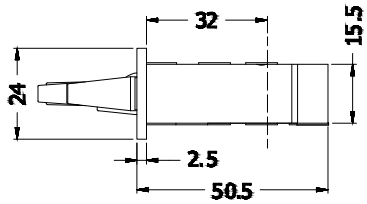	**ACSZ512** **Multi-Point Door Lock** **H = 2470mm** **Requires:** **1xACSZ650L/R** **1xACSZ651** **----------OR----------** **1xACSZ512** **1xACSZ682**	**1**	**each**		
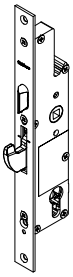	**ACSZ515** **1-Point Door Lock** **H = 290mm**	**1**	**each**	**EF023** **EF120**	MF SA KL HP SSC SMC PC W Z





MF = Mill Finish
SA = Silver Anodised
KL = Basic Colour
HP = Special Colour
SSC = Smooth Satin Chrome
SMC = Smokey Chrome
PC = Polished Chrome
W = White
Z = Black

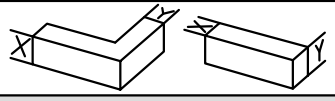

ACCESSORIES : PHOTOS & DRAWINGS

Image	Part Code	Pack	Unit	Application	Colour
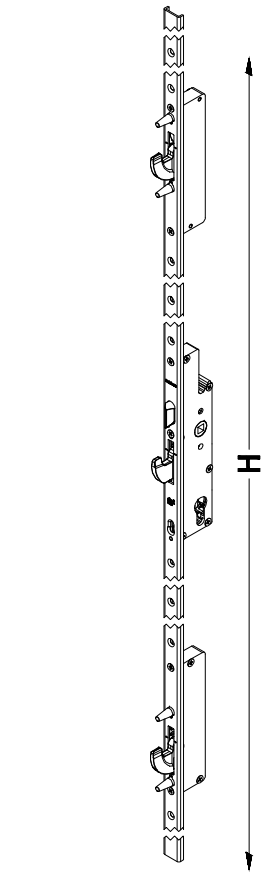 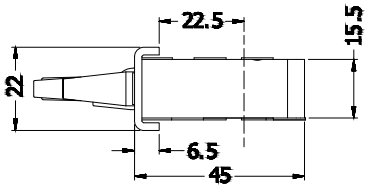	**ACSZ550** **Multi-Point Door Lock** **H = 2170mm** **Requires:** **1xACSZ650L/R & 2xACSZ651** **----------OR----------** **1xACSZ680L/R**	**1**	**each**		MF SA KL HP SSC SMC PC W Z
	ACSZ551 **Multi-Point Door Lock** **H = 1895mm** **Requires:** **1xACSZ650L/R & 2xACSZ651** **----------OR----------** **1xACSZ681L/R**	**1**	**each**	**EF424** **EF425**	
	ACSZ552 **Multi-Point Door Lock** **H = 2470mm** **Requires:** **1xACSZ650L/R & 2xACSZ651** **----------OR----------** **1xACSZ682L/R**	**1**	**each**		
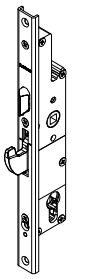	**ACSZ555** **1-Point Door Lock** **H = 290mm**	**1**	**each**	**EF424** **EF425**	MF SA KL HP SSC SMC PC W Z

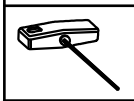


Screw (Grub)

MF = Mill Finish
SA = Silver Anodised
KL = Basic Colour
HP = Special Colour
SSC = Smooth Satin Chrome
SMC = Smokey Chrome
PC = Polished Chrome
W = White
Z = Black

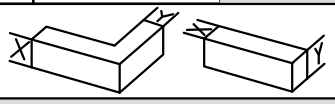

ACCESSORIES : PHOTOS & DRAWINGS

Image	Part Code	Pack	Unit	Application	Colour
	**ACSZ650L/R** **Short Keep Left**	**1**	**each**		MF SA KL HP SSC SMC PC W Z
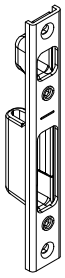	**ACSZ651** **Short Keep Top & Bottom**	**1**	**each**		MF SA KL HP SSC SMC PC W Z
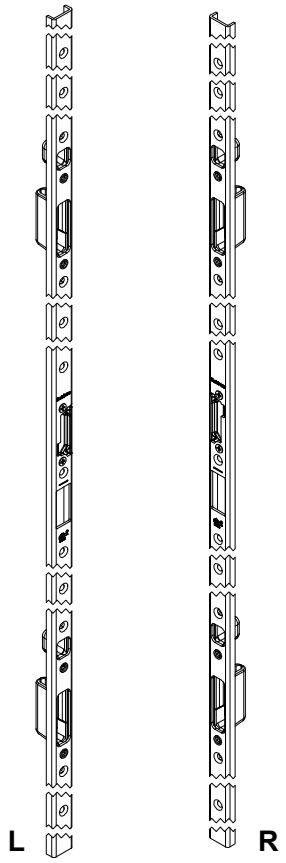	**ACSZ680L/R** **Long Keep : 2170mm**	**1**	**each**	**ACSZ550**	MF SA KL HP SSC SMC PC W Z
	ACSZ681L/R **Long Keep : 1895mm**	**1**	**each**	**ACSZ551**	MF SA KL HP SSC SMC PC W Z
	ACSZ682L/R **Long Keep : 2470mm**	**1**	**each**	**ACSZ552**	MF SA KL HP SSC SMC PC W Z



T-BARS
ACVG65=2.5mm
ACVG66=3.0mm
ACVL150=4.0mm



Screw (Grub)

MF = Mill Finish
SA = Silver Anodised
KL = Basic Colour
HP = Special Colour
SSC = Smooth Satin Chrome
SMC = Smokey Chrome
PC = Polished Chrome
W = White
Z = Black

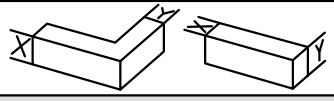

ELECTRIC STRIKE



In order to be able to use an electric strike, a keep with latch plate must be provided

Remove the latch plate





Mount and fit the electric strike with the same screws

ACSZ780



ACSZ780



For both short and long keeps, flat and U-faceplate





T-BARS
ACVG65=2.5mm
ACVG66=3.0mm
ACVL150=4.0mm



Screw (Grub)

MF	= Mill Finish	W	= White
SA	= Silver Anodised	Z	= Black
KL	= Basic Colour		
HP	= Special Colour		
SSC	= Smooth Satin Chrome		
SMC	= Smokey Chrome		
PC	= Polished Chrome		

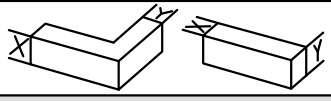

Image	Part Code	Pack	Unit	Application	Colour	
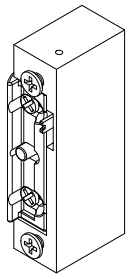	**ACSZ780** **Fail Secure Electric strike (L/R)**	**1**	**each**		MF SA KL HP SSC SMC PC W Z	
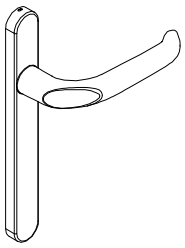	**ACSZ800** **External Lever Handle Without Cylinder**	**1**	**each**	**ACSZ55*** **ACSZ801** **ACSZ803** **ACSZ830** **ACMX309**	MF SA KL HP SSC SMC PC W Z	 ✓ ✓ ✓ ✓ ✓
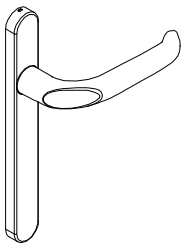	**ACSZ801** **Internal Lever Handle Without Cylinder**	**1**	**each**	**ACSZ55*** **ACSZ800** **ACSZ803** **ACMX309**	MF SA KL HP SSC SMC PC W Z	 ✓ ✓ ✓ ✓ ✓
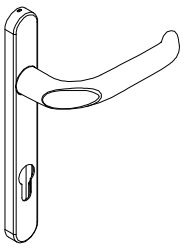	**ACSZ802** **External Handle With Cylinder**	**1**	**each**	**ACSZ55*** **ACSZ800** **ACSZ803** **ACMX309**	MF SA KL HP SSC SMC PC W Z	 ✓ ✓ ✓ ✓ ✓
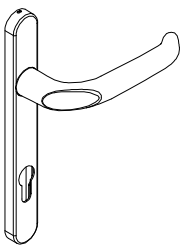	**ACSZ803** **Internal Handle With Cylinder**	**1**	**each**	**ACSZ55*** **ACSZ801** **ACSZ803** **ACMX309**	MF SA KL HP SSC SMC PC W Z	 ✓ ✓ ✓ ✓ ✓



T-BARS
ACVG65=2.5mm
ACVG66=3.0mm
ACVL150=4.0mm



Screw (Grub)

MF = Mill Finish
SA = Silver Anodised
KL = Basic Colour
HP = Special Colour
SSC = Smooth Satin Chrome
SMC = Smokey Chrome
PC = Polished Chrome
W = White
Z = Black

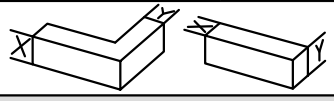

ACCESSORIES : PHOTOS & DRAWINGS

Image	Part Code	Pack	Unit	Application	Colour	
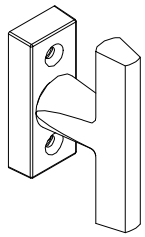	**ACSZ827** **Internal 'T' Door Handle With Short Backplate**	**1**	**each**		MF	
					SA	✓
					KL	✓
					HP	✓
					SSC	
					SMC	
					PC	
					W	✓
					Z	✓
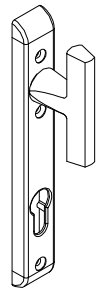	**ACSZ830** **Internal 'T' Door Handle With Long Backplate**	**1**	**each**		MF	
					SA	✓
					KL	✓
					HP	✓
					SSC	
					SMC	
					PC	
					W	✓
					Z	✓
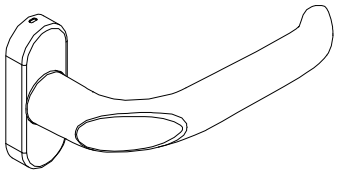	**ACSZ836** **Internal Door Handle With Short Backplate**	**1**	**each**		MF	
					SA	✓
					KL	✓
					HP	✓
					SSC	
					SMC	
					PC	
					W	✓
					Z	✓
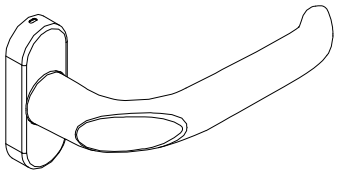	**ACSZ837** **External Door Handle With Short Backplate**	**1**	**each**		MF	
					SA	✓
					KL	✓
					HP	✓
					SSC	
					SMC	
					PC	
					W	✓
					Z	✓
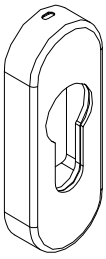	**ACSZ839** **Escutcheon (Cylinder Cover)**	**1**	**each**		MF	
					SA	✓
					KL	✓
					HP	✓
					SSC	
					SMC	
					PC	
					W	✓
					Z	✓





MF = Mill Finish
SA = Silver Anodised
KL = Basic Colour
HP = Special Colour
SSC = Smooth Satin Chrome
SMC = Smokey Chrome
PC = Polished Chrome
W = White
Z = Black

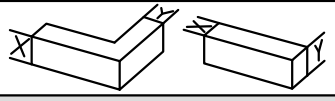

ACCESSORIES : PHOTOS & DRAWINGS

Image	Part Code	Pack	Unit	Application	Colour
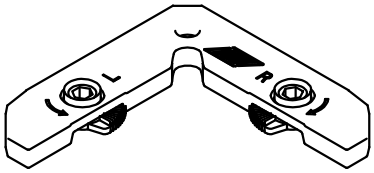	**ACUN020** **Corner alignment** **Variable angle bracket**	**10**	**pack**	**EF020**	MF SA KL HP SSC SMC PC W Z
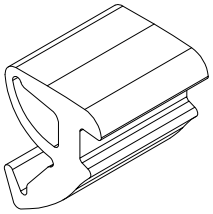	**ACUN033** **Inner glazing gasket** **3 - 5mm**	**100**	**m**		MF SA KL HP SSC SMC PC W Z
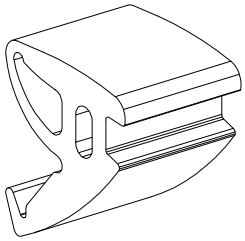	**ACUN036** **Inner glazing gasket** **6 - 8mm**	**100**	**m**		MF SA KL HP SSC SMC PC W Z
	**ACUN050** **Draining tube**	**1**	**each**	**EF035** **EF036**	MF SA KL HP SSC SMC PC W Z
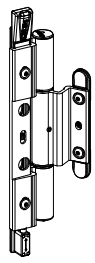	**ACUN102** **Three Part Hinge**	**1**	**each**	**EF023** **EF120**	MF SA KL HP SSC SMC PC W Z





MF = Mill Finish
SA = Silver Anodised
KL = Basic Colour
HP = Special Colour
SSC = Smooth Satin Chrome
SMC = Smokey Chrome
PC = Polished Chrome
W = White
Z = Black

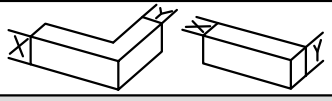

ACCESSORIES : PHOTOS & DRAWINGS

Image	Part Code	Pack	Unit	Application	Colour
	**ACUN103** **Security Pins for Three Part Hinge**	**1**	**each**	**ACUN102**	MF SA KL HP SSC SMC PC W Z
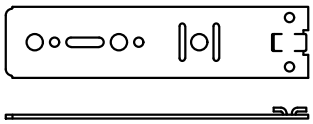	**ACUN230** **160mm Fixing Lug**	**100**	**pack**		MF SA KL HP SSC SMC PC W Z
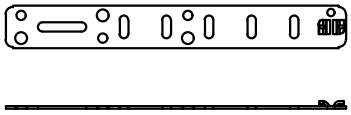	**ACUN232** **240mm Fixing Lug**	**100**	**pack**		MF SA KL HP SSC SMC PC W Z
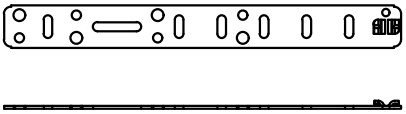	**ACUN233** **280mm Fixing Lug**	**100**	**pack**		MF SA KL HP SSC SMC PC W Z
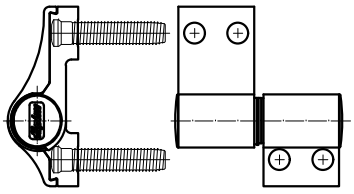	**ACUN450** **Hinge**	**1**	**each**	**EF424** **EF425**	MF SA KL HP SSC SMC PC W Z





MF = Mill Finish **W = White**
SA = Silver Anodised **Z = Black**
KL = Basic Colour
HP = Special Colour
SSC = Smooth Satin Chrome
SMC = Smokey Chrome
PC = Polished Chrome

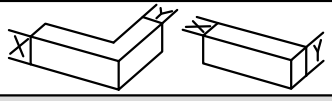

ACCESSORIES : PHOTOS & DRAWINGS

Image	Part Code	Pack	Unit	Application	Colour
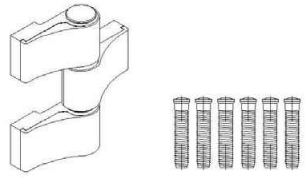	**ACUN456** **Hinge**	**1**	**each**	**EF454** **EF425** **EF031**	MF SA KL HP SSC SMC PC W Z
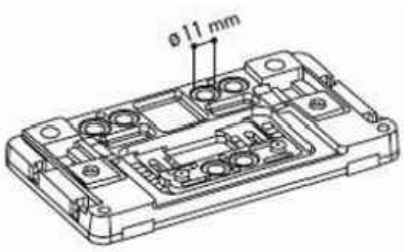	**ACUN480** **Drill Jig**	**1**	**each**	**ACUN450**	MF SA KL HP SSC SMC PC W Z
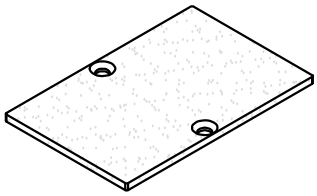	**ACUN500** **Cover plate**	**1**	**each**	**UN500** **UN501**	MF SA KL HP SSC SMC PC W Z
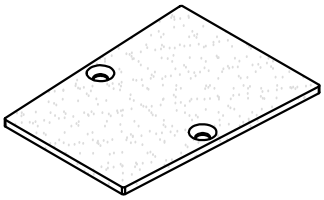	**ACUN501** **Cover plate**	**1**	**each**	**UN500** **UN511**	MF SA KL HP SSC SMC PC W Z
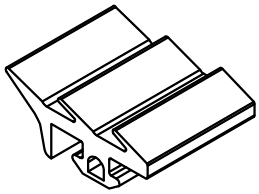	**ACVG31N** **Glazing gasket outside 3mm rotated** **ACFT031N**	**200** **6000**	**m** **m**		MF SA KL HP SSC SMC PC W Z



T-BARS
ACVG65=2.5mm
ACVG66=3.0mm
ACVL150=4.0mm



Screw (Grub)

MF	**= Mill Finish**	**W**	**= White**
SA	**= Silver Anodised**	**Z**	**= Black**
KL	**= Basic Colour**		
HP	**= Special Colour**		
SSC	**= Smooth Satin Chrome**		
SMC	**= Smokey Chrome**		
PC	**= Polished Chrome**		

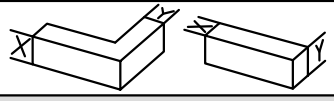

ACCESSORIES : PHOTOS & DRAWINGS

Image	Part Code	Pack	Unit	Application	Colour
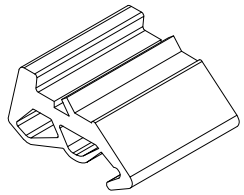	**ACVG32N** **Glazing gasket inside 3mm rotated** **ACFT032N**	**100** **2400**	**m** **m**		MF ☐ SA ☐ KL ☐ HP ☐ SSC ☐ SMC ☐ PC ☐ W ☐ Z ☐
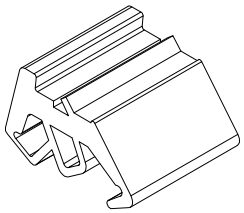	**ACVG33N** **Glazing gasket inside 4mm rotated** **ACFT033N**	**100** **2400**	**m** **m**		MF ☐ SA ☐ KL ☐ HP ☐ SSC ☐ SMC ☐ PC ☐ W ☐ Z ☐
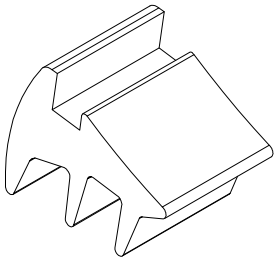	**ACVG340N** **Glazing gasket inside 6mm rotated** **ACFT340N**	**100** **2400**	**m** **m**		MF ☐ SA ☐ KL ☐ HP ☐ SSC ☐ SMC ☐ PC ☐ W ☐ Z ☐
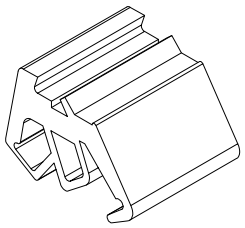	**ACVG34N** **Glazing gasket inside 5mm rotated** **ACFT034N**	**100** **2400**	**m** **m**		MF ☐ SA ☐ KL ☐ HP ☐ SSC ☐ SMC ☐ PC ☐ W ☐ Z ☐
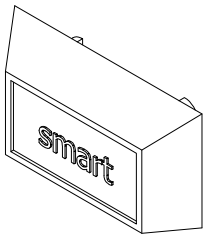	**ACVG45N** **Drain hole cover**	**100**	**pack**	**EF010** **EF011** **EF110**	MF ☐ SA ☐ KL ☐ HP ☐ SSC ☐ SMC ☐ PC ✓ W ✓ Z ☐





MF = Mill Finish
SA = Silver Anodised
KL = Basic Colour
HP = Special Colour
SSC = Smooth Satin Chrome
SMC = Smokey Chrome
PC = Polished Chrome
W = White
Z = Black

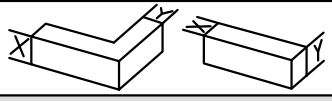

ACCESSORIES : PHOTOS & DRAWINGS

Image	Part Code	Pack	Unit	Application	Colour
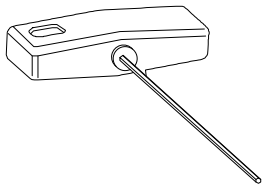	**ACVG65** **T-handle hexagon-key 2.5mm**	**24**	**pack**	**EF045**	MF SA KL HP SSC SMC PC W Z
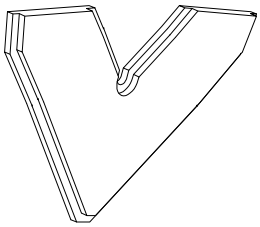	**ACVL020B** **Plastic chevron**	**2000**	**pack**	**EF010** **EF011** **EF019** **EF110** **EF020** **EF023**	MF SA KL HP SSC SMC PC W Z
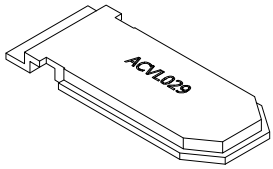	**ACVL029** **Strengthening piece for connecting bracket**	**1**	**each**	**EF030** **EF031** **EF032**	MF SA KL HP SSC SMC PC W Z
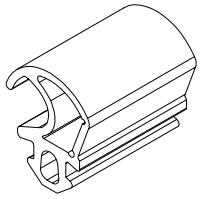	**ACVL031N** **Gasket rotated for windows**	**100**	**m**		MF SA KL HP SSC SMC PC W Z
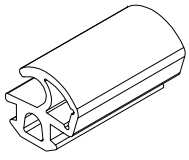	**ACVL032N** **Gasket rotated for doors**	**100**	**m**		MF SA KL HP SSC SMC PC W Z



T-BARS
ACVG65=2.5mm
ACVG66=3.0mm
ACVL150=4.0mm



Screw (Grub)

MF = Mill Finish
SA = Silver Anodised
KL = Basic Colour
HP = Special Colour
SSC = Smooth Satin Chrome
SMC = Smokey Chrome
PC = Polished Chrome
W = White
Z = Black

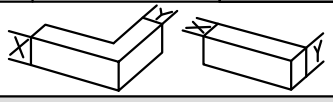

ACCESSORIES : PHOTOS & DRAWINGS

Image	Part Code	Pack	Unit	Application	Colour	
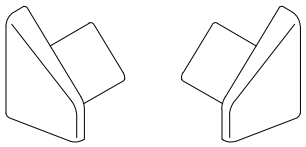	**ACVL059** **VL72 end cap**	**1**	**set**	**VL72**	MF SA KL HP SSC SMC PC W Z	 ✓ ✓
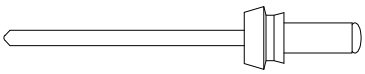	**ACVL061** **Rivet**	**100**	**pack**	**VL72**	MF SA KL HP SSC SMC PC W Z	
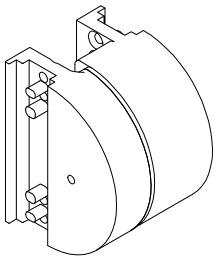	**ACVL090 L/R** **Pivot box 180°** **Max hor. = 180kg** **Max ver. = 120kg**	**1**	**each**	**EF045**	MF SA KL HP SSC SMC PC W Z	 ✓ ✓ ✓ ✓ ✓
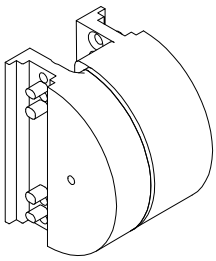	**ACVL091 L/R** **Pivot box 180° + restrict** **Max hor. = 180kg** **Max ver. = 120kg**	**1**	**each**	**EF045**	MF SA KL HP SSC SMC PC W Z	 ✓ ✓ ✓ ✓ ✓
	**ACVL092** **Set for pivoting window**	**1**	**set**	**EF045**	MF SA KL HP SSC SMC PC W Z	

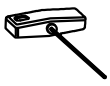



MF	**= Mill Finish**	**W**	**= White**
SA	**= Silver Anodised**	**Z**	**= Black**
KL	**= Basic Colour**		
HP	**= Special Colour**		
SSC	**= Smooth Satin Chrome**		
SMC	**= Smokey Chrome**		
PC	**= Polished Chrome**		

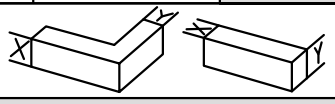

ACCESSORIES : PHOTOS & DRAWINGS

Image	Part Code	Pack	Unit	Application	Colour	
	**ACVL093** **Non-Locking Pivot Window Handle** **Fitting requires 2 x M5x30 CSK Screws (sold separately)**	**1**	**each**	**EF032**	MF	
					SA	✓
					KL	✓
					HP	✓
					SSC	
					SMC	
					PC	
					W	✓
					Z	✓
	**ACVL094** **Locking Pivot Window Handle** **Fitting requires 2 x M5x30 CSK Screws (sold separately)**	**1**	**each**		MF	
					SA	✓
					KL	✓
					HP	✓
					SSC	
					SMC	
					PC	
					W	
					Z	
	**ACVL127** **2.5m rod**	**1**	**each**	**ACGT430**	MF	
					SA	
					KL	
					HP	
					SSC	
					SMC	
					PC	
					W	
					Z	
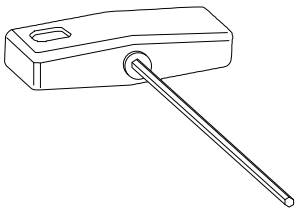	**ACVL150** **T-handle hexagon key 4mm**	**1**	**each**	**ACFT026B** **ACFT116B** **ACFT120B**	MF	
					SA	
					KL	
					HP	
					SSC	
					SMC	
					PC	
					W	
					Z	
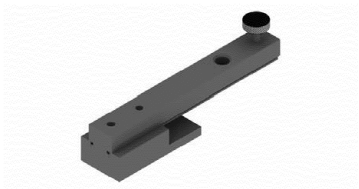	**ACVL162** **Drill jig set**	**1**	**each**	**ACFT120A**	MF	
					SA	
					KL	
					HP	
					SSC	
					SMC	
					PC	
					W	
					Z	

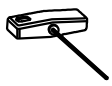

T-BARS
ACVG65=2.5mm
ACVG66=3.0mm
ACVL150=4.0mm



Screw (Grub)

MF	**= Mill Finish**	**W**	**= White**
SA	**= Silver Anodised**	**Z**	**= Black**
KL	**= Basic Colour**		
HP	**= Special Colour**		
SSC	**= Smooth Satin Chrome**		
SMC	**= Smokey Chrome**		
PC	**= Polished Chrome**		

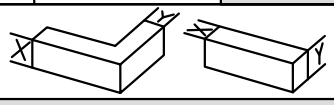

ACCESSORIES : PHOTOS & DRAWINGS

Image	Part Code	Pack	Unit	Application	Colour	
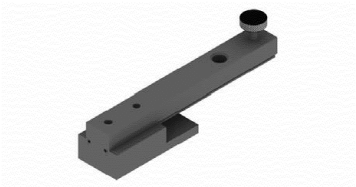	**ACVL163** **Drill jig set**	**1**	**each**	**ACFT120B**	MF	
					SA	
					KL	
					HP	
					SSC	
					SMC	
					PC	
					W	
					Z	
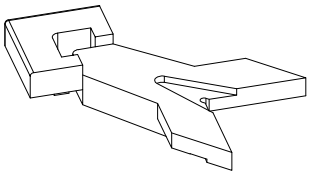	**ACVL231** **Corner for gasket**	**1**	**each**	**ACVL032**	MF	
					SA	
					KL	
					HP	
					SSC	
					SMC	
					PC	
					W	
					Z	
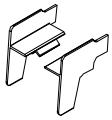	**ACVL279N** **Sealing member**	**1**	**each**	**FT557** **VL479**	MF	✓
					SA	✓
					KL	✓
					HP	✓
					SSC	
					SMC	
					PC	
					W	✓
					Z	✓
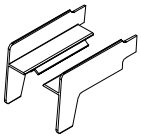	**ACVL280N** **Sealing member**	**1**	**each**	**FT557** **VL480**	MF	✓
					SA	✓
					KL	✓
					HP	✓
					SSC	
					SMC	
					PC	
					W	✓
					Z	✓
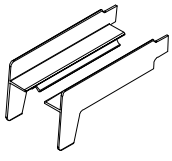	**ACVL281N** **Sealing member**	**1**	**each**	**FT557** **VL481**	MF	✓
					SA	✓
					KL	✓
					HP	✓
					SSC	
					SMC	
					PC	
					W	✓
					Z	✓

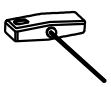



MF = Mill Finish **W = White**
SA = Silver Anodised **Z = Black**
KL = Basic Colour
HP = Special Colour
SSC = Smooth Satin Chrome
SMC = Smokey Chrome
PC = Polished Chrome

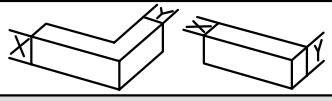

Image	Part Code	Pack	Unit	Application	Colour	
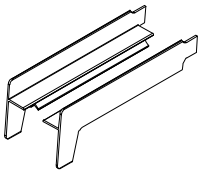	**ACVL282N** **Sealing member**	**1**	**each**	**FT557** **VL482**	MF SA KL HP SSC SMC PC W Z	✓ ✓ ✓ ✓ ✓ ✓
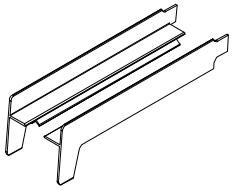	**ACVL283N** **Sealing member**	**1**	**each**	**FT557** **VL483**	MF SA KL HP SSC SMC PC W Z	✓ ✓ ✓ ✓ ✓ ✓
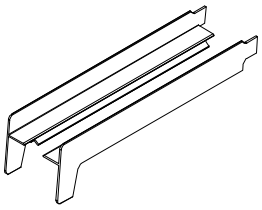	**ACVL284N** **Sealing member**	**1**	**each**	**FT557** **VL484**	MF SA KL HP SSC SMC PC W Z	✓ ✓ ✓ ✓ ✓ ✓
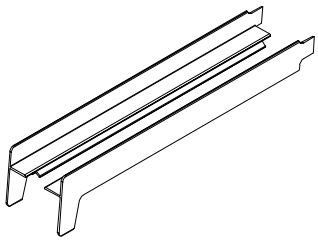	**ACVL286N** **Sealing member**	**1**	**each**	**FT557** **VL486**	MF SA KL HP SSC SMC PC W Z	✓ ✓ ✓ ✓ ✓ ✓
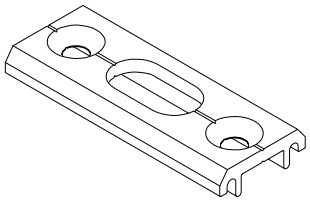	**ACVL429** **Keep for ACVL432**	**1**	**each**	**ACVL432**	MF SA KL HP SSC SMC PC W Z	





MF = Mill Finish **W = White**
SA = Silver Anodised **Z = Black**
KL = Basic Colour
HP = Special Colour
SSC = Smooth Satin Chrome
SMC = Smokey Chrome
PC = Polished Chrome

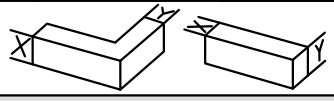

ACCESSORIES : PHOTOS & DRAWINGS

Image	Part Code	Pack	Unit	Application	Colour	
	**ACVL432** **Extended bolt lock**	**1**	**each**	**EF023** **EF120** **EF040**	MF SA KL HP SSC SMC PC W Z	
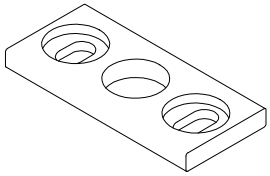	**ACVL434** **Keep for ACVL432**	**1**	**each**	**ACVL432**	MF SA KL HP SSC SMC PC W Z	
	**ACVL457** **Sealing for VL479 > VL486**	**1**	**set**	**FT458**	MF SA KL HP SSC SMC PC W Z	
	**ACVL477** **For FT458 and** **VL479 > VL486**	**1**	**each**	**FT458**	MF SA KL HP SSC SMC PC W Z	
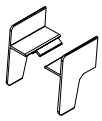	**ACVL479N** **Sealing member**	**1**	**each**	**FT458** **VL479**	MF ✓ SA ✓ KL ✓ HP ✓ SSC SMC PC W ✓ Z ✓	



T-BARS
ACVG65=2.5mm
ACVG66=3.0mm
ACVL150=4.0mm



Screw (Grub)

MF	**= Mill Finish**	**W**	**= White**
SA	**= Silver Anodised**	**Z**	**= Black**
KL	**= Basic Colour**		
HP	**= Special Colour**		
SSC	**= Smooth Satin Chrome**		
SMC	**= Smokey Chrome**		
PC	**= Polished Chrome**		

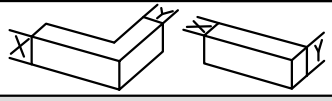

Image	Part Code	Pack	Unit	Application	Colour	
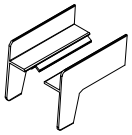	**ACVL480N** **Sealing member**	**1**	**each**	**FT458** **VL480**	MF	
					SA	✓
					KL	✓
					HP	✓
					SSC	✓
					SMC	
					PC	
					W	
					Z	✓
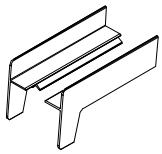	**ACVL481N** **Sealing member**	**1**	**each**	**FT458** **VL481**	MF	
					SA	✓
					KL	✓
					HP	✓
					SSC	✓
					SMC	
					PC	
					W	
					Z	✓
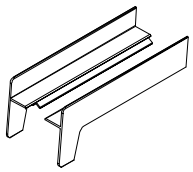	**ACVL482N** **Sealing member**	**1**	**each**	**FT458** **VL482**	MF	✓
					SA	✓
					KL	✓
					HP	✓
					SSC	
					SMC	
					PC	
					W	✓
					Z	✓
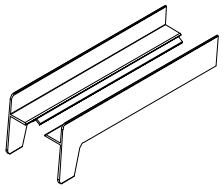	**ACVL483N** **Sealing member**	**1**	**each**	**FT458** **VL483**	MF	✓
					SA	✓
					KL	✓
					HP	✓
					SSC	
					SMC	
					PC	
					W	✓
					Z	✓
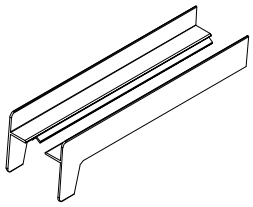	**ACVL484N** **Sealing member**	**1**	**each**	**FT458** **VL484**	MF	✓
					SA	✓
					KL	✓
					HP	✓
					SSC	
					SMC	
					PC	
					W	✓
					Z	✓



T-BARS
ACVG65=2.5mm
ACVG66=3.0mm
ACVL150=4.0mm



Screw (Grub)

MF = Mill Finish
SA = Silver Anodised
KL = Basic Colour
HP = Special Colour
SSC = Smooth Satin Chrome
SMC = Smokey Chrome
PC = Polished Chrome
W = White
Z = Black

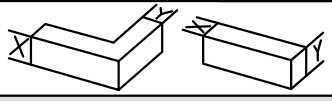

ACCESSORIES : PHOTOS & DRAWINGS

Image	Part Code	Pack	Unit	Application	Colour	
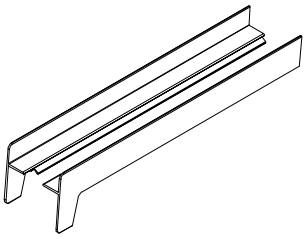	**ACVL486N** **Sealing member**	**1**	**each**	**FT458** **VL486**	MF SA KL HP SSC SMC PC W Z	✓ ✓ ✓ ✓ ✓ ✓
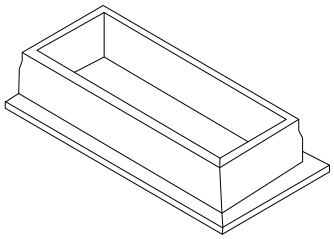	**ACVL635** **End piece**	**1**	**each**	**EF035**	MF SA KL HP SSC SMC PC W Z	 ✓
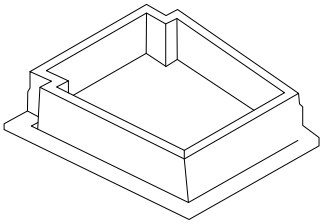	**ACVL636** **End piece**	**1**	**each**	**EF036**	MF SA KL HP SSC SMC PC W Z	 ✓
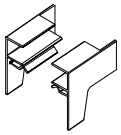	**ACVL679** **End piece (pair)**	**1**	**each**	**VL479**	MF SA KL HP SSC SMC PC W Z	✓ ✓ ✓ ✓ ✓ ✓
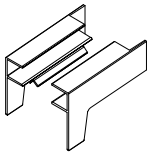	**ACVL680** **End piece (pair)**	**1**	**each**	**VL480**	MF SA KL HP SSC SMC PC W Z	✓ ✓ ✓ ✓ ✓ ✓

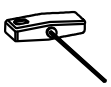



MF = Mill Finish
SA = Silver Anodised
KL = Basic Colour
HP = Special Colour
SSC = Smooth Satin Chrome
SMC = Smokey Chrome
PC = Polished Chrome
W = White
Z = Black

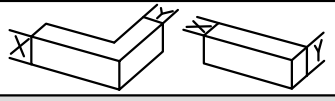

Image	Part Code	Pack	Unit	Application	Colour	
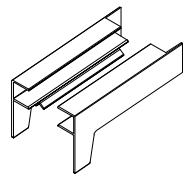	**ACVL681** **End piece (pair)**	**1**	**each**	**VL481**	MF	✓
					SA	✓
					KL	✓
					HP	✓
					SSC	
					SMC	
					PC	
					W	✓
					Z	✓
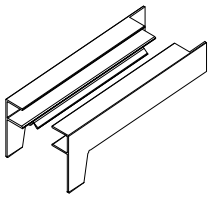	**ACVL682** **End piece (pair)**	**1**	**each**	**VL482**	MF	✓
					SA	✓
					KL	✓
					HP	✓
					SSC	
					SMC	
					PC	
					W	✓
					Z	✓
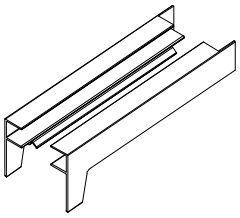	**ACVL683** **End piece (pair)**	**1**	**each**	**VL483**	MF	✓
					SA	✓
					KL	✓
					HP	✓
					SSC	
					SMC	
					PC	
					W	✓
					Z	✓
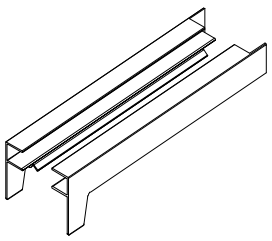	**ACVL684** **End piece (pair)**	**1**	**each**	**VL484**	MF	✓
					SA	✓
					KL	✓
					HP	✓
					SSC	
					SMC	
					PC	
					W	✓
					Z	✓
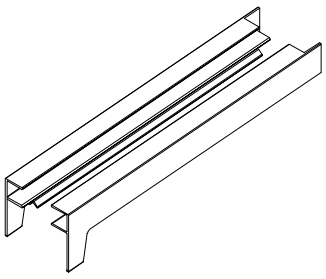	**ACVL686** **End piece (pair)**	**1**	**each**	**VL486**	MF	✓
					SA	✓
					KL	✓
					HP	✓
					SSC	
					SMC	
					PC	
					W	✓
					Z	✓

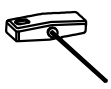



MF = Mill Finish
SA = Silver Anodised
KL = Basic Colour
HP = Special Colour
SSC = Smooth Satin Chrome
SMC = Smokey Chrome
PC = Polished Chrome
W = White
Z = Black

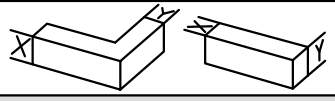

ACCESSORIES : PHOTOS & DRAWINGS

Image	Part Code	Pack	Unit	Application	Colour	
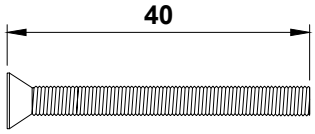	**ACVS061** **M5 X 40mm Din 965 Screw**	**200**	**pack**		MF	
					SA	
					KL	
					HP	
					SSC	
					SMC	
					PC	
					W	
					Z	
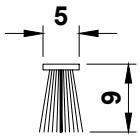	**ACVS033** **5 x 9mm Woolpile in Black with Fin**	**150**	**m**		MF	
					SA	
					KL	
					HP	
					SSC	
					SMC	
					PC	
					W	
					Z	✓
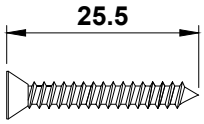	**MUA025** **No.6 X 25mm SS CSK Self Tapping Screw**	**100**	**pack**		MF	
					SA	
					KL	
					HP	
					SSC	
					SMC	
					PC	
					W	
					Z	
					MF	
					SA	
					KL	
					HP	
					SSC	
					SMC	
					PC	
					W	
					Z	
					MF	
					SA	
					KL	
					HP	
					SSC	
					SMC	
					PC	
					W	
					Z	





MF = Mill Finish **W = White**
SA = Silver Anodised **Z = Black**
KL = Basic Colour
HP = Special Colour
SSC = Smooth Satin Chrome
SMC = Smokey Chrome
PC = Polished Chrome

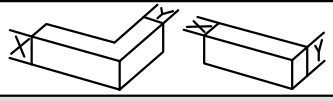

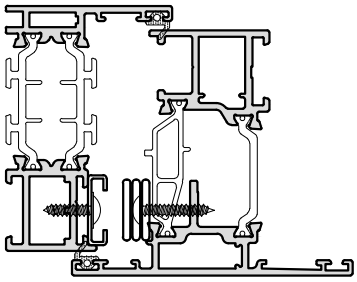

EF924
EF926

Friction Hinge Stays 16mm Stack (Standard)

Top Hung Windows

Top Hung	Type of Hinge / Stay	Max. Vent Weight (kgs)	Height		Typical Width
			Mimimum	Maximum	
ACETDHS08	Standard	12	200	350	-
ACETDHS10		16	275	400	-
ACETDHS12		20	350	550	-
ACETDHS16		21	500	780	-
ACETDHS20		26	700	1100	-
ACETDHS24		40	850	1300	-
ACETDTH24	Heavy Duty	50	850	1500	-
ACETDHS12R	Restricted	20	350	550	-
ACETDHS16R		21	500	780	-
ACETDHS20R		26	700	1100	-
ACETDHS24R		40	850	1300	-

Side Hung Windows

Side Hung	Type of Hinge / Stay	Max. Vent Weight (kgs)	Width		Typical Height
			Minimum	Maximum	
ACETDHSSH12	Standard	22	320	600	-
ACETDHSSH16		24	420	700	-
ACETDHRSH12	Restricted	22	300	600	-
ACETDHRSH16		24	400	700	-
ACETME16	Egress	40	400	900	-
ACETDSH16	Heavy Duty	40	400	1000	-

Note1: Vent Height / Width is measured in mm.
Note2: Dimensions shown in table are sash sizes - not rebate sizes.
Note3: Top hung height and side hung width sizes to be reduced by 2mm where size is 450mm or smaller
Note4: Typical Dimensions based on Max. Size and Glass 30kg/metre

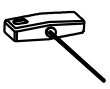

T-BARS
ACVG65=2.5mm
ACVG66=3.0mm
ACVL150=4.0mm



Screw (Grub)

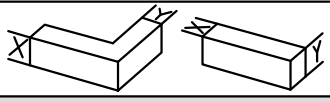

Open Out Windows

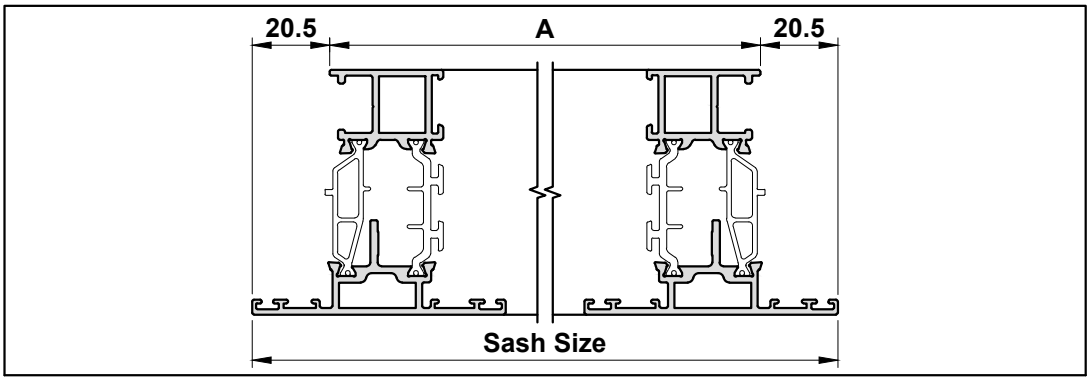

Part Code	Rod Length (mm)	Number of Keeps	Sash Rebate Size ('A')	
			Minimum	Maximum
ACEF951	200	1	200	400
ACEF952	400	2	400	600
ACEF953	600	2	600	800
ACEF954	800	3	800	1000
ACEF955	1000	3	1000	1200
ACEF956	1200	3	1200	1400

Note: To Suit Handle ACET868

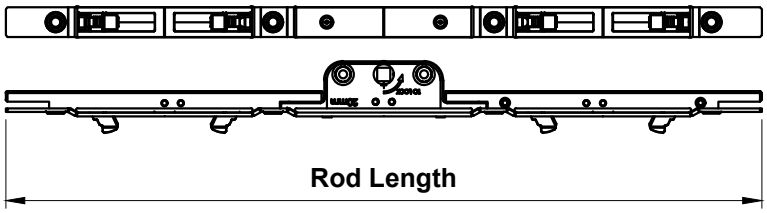

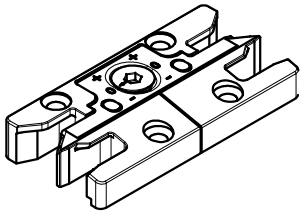

Heavy Duty (Sterling) Stays
(Use drill jig ACEF992)

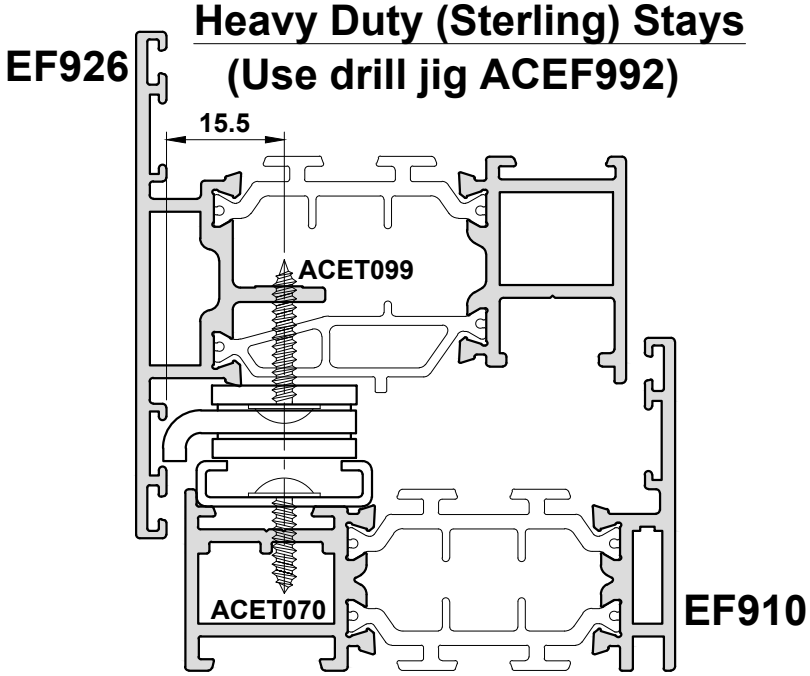

Hinge Code Top Hung	Hinge Length (mm)	Max Vent Weight (kg)	Min Vent Height (mm)	Max Vent Height (mm)	Opening Angle (+/-2.5°)
ACINS10	262	40	315	640	50
ACINS12	313	50	640	800	50
ACINS16	415	65	800	1100	50
ACINS22	567	100	1090	1500	45
ACINS22W	567	100	1500	2000	20
ACINS26	680	180	2000	2500	20
Side Hung	**Hinge Length (mm)**	**Max Vent Weight (kg)**	**Min Vent Width (mm)**	**Max Vent Width (mm)**	**Opening Angle (+/-2.5°)**
ACINSSH10	262	38	327	660	85
ACINSSH16	415	55	450	838	60

Please Note:

1. Dimensions shown in table are sash sizes - not rebate sizes.
2. The minimum sash sizes for ACINS10 & ACINSSH10 can both be reduced to 281mm where cockspur handles are used.
3. Top hung height & side hung width sizes to be reduced by 2mm where size is 450mm or smaller.

Image	Part Code	Pack	Unit	Application	Colour	
	**ACMX09700** **Alu. Polish**	**1**	**each**		MF	✓
					SA	
					KL	
					HP	
					SSC	
					SMC	
					PC	
					W	
					Z	
	**ACMX09761** **Maxi Gloss**	**1**	**each**		MF	
					SA	
					KL	
					HP	
					SSC	
					SMC	
					PC	
					W	
					Z	
	**ACMX09762** **Alu. Bright**	**1**	**each**		MF	
					SA	
					KL	
					HP	
					SSC	
					SMC	
					PC	
					W	
					Z	
	**ACMX09763** **Teflon Spray**	**1**	**each**		MF	
					SA	
					KL	
					HP	
					SSC	
					SMC	
					PC	
					W	
					Z	
	**ACMX09764** **Maxi Clean**	**1**	**each**		MF	
					SA	
					KL	
					HP	
					SSC	
					SMC	
					PC	
					W	
					Z	



T-BARS
ACVG65=2.5mm
ACVG66=3.0mm
ACVL150=4.0mm



Screw (Grub)

MF = Mill Finish
SA = Silver Anodised
KL = Basic Colour
HP = Special Colour
SSC = Smooth Satin Chrome
SMC = Smokey Chrome
PC = Polished Chrome
W = White
Z = Black

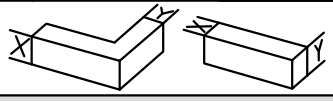

Eco Futural

STANDARD ACCESSORIES

Image	Part Code	Pack	Unit	Application	Colour
	**ACMX09765** **Alu. Cleaner**	**1**	**each**		MF SA KL HP SSC SMC PC W Z
	**ACMX09770** **Roll & Wrap 100mm**	**1**	**each**		MF SA KL HP SSC SMC PC W Z
	**ACMX09775** **Grip Handwrap**	**1**	**each**		MF SA KL HP SSC SMC PC W Z
	**ACMX09801** **Protective Tape 50mm**	**1**	**each**		MF SA KL HP SSC SMC PC W Z
	**ACMX09802** **Protective Tape 70mm**	**1**	**each**		MF SA KL HP SSC SMC PC W Z



T-BARS
ACVG65=2.5mm
ACVG66=3.0mm
ACVL150=4.0mm



Screw (Grub)

MF	**= Mill Finish**	**W**	**= White**
SA	**= Silver Anodised**	**Z**	**= Black**
KL	**= Basic Colour**		
HP	**= Special Colour**		
SSC	**= Smooth Satin Chrome**		
SMC	**= Smokey Chrome**		
PC	**= Polished Chrome**		

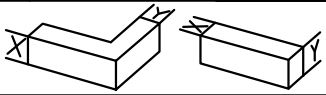

Image	Part Code	Pack	Unit	Application	Colour	
	**ACMX09803** **Protective Tape 100mm**	**1**	**each**		MF	
					SA	
					KL	
					HP	
					SSC	
					SMC	
					PC	
					W	
					Z	
	**ACSIL04** **Sealing Glue** **Order with suffix of KL colour (eg.ACSIL04KL005) or BL=Black/WP=White/ CL=Clear**	**1**	**each**		MF	
					SA	
					KL	✓
					HP	
					SSC	
					SMC	
					PC	
					W	✓
					Z	✓
	**ACSIL05** **Rubber Sealant**	**1**	**each**		MF	
					SA	
					KL	
					HP	
					SSC	
					SMC	
					PC	
					W	
					Z	
	**ACSIL08** **Silicon Gun**	**1**	**each**		MF	
					SA	
					KL	
					HP	
					SSC	
					SMC	
					PC	
					W	
					Z	
	**ACSIL013** **Glue for Mitre**	**1**	**each**		MF	
					SA	
					KL	
					HP	
					SSC	
					SMC	
					PC	
					W	
					Z	



T-BARS
ACVG65=2.5mm
ACVG66=3.0mm
ACVL150=4.0mm



Screw (Grub)

MF	**= Mill Finish**	**W**	**= White**
SA	**= Silver Anodised**	**Z**	**= Black**
KL	**= Basic Colour**		
HP	**= Special Colour**		
SSC	**= Smooth Satin Chrome**		
SMC	**= Smokey Chrome**		
PC	**= Polished Chrome**		

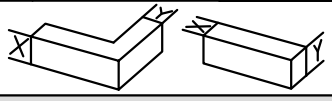

Image	Part Code	Pack	Unit	Application	Colour	
	**ACSIL014** **Anti-Corrosion Coating**	**1**	**each**		MF	✓
					SA	
					KL	
					HP	
					SSC	
					SMC	
					PC	
					W	
					Z	
	**ACUN3900** **Gasket Roller**	**1**	**each**		MF	
					SA	
					KL	
					HP	
					SSC	
					SMC	
					PC	
					W	
					Z	
					MF	
					SA	
					KL	
					HP	
					SSC	
					SMC	
					PC	
					W	
					Z	
					MF	
					SA	
					KL	
					HP	
					SSC	
					SMC	
					PC	
					W	
					Z	
					MF	
					SA	
					KL	
					HP	
					SSC	
					SMC	
					PC	
					W	
					Z	



T-BARS
ACVG65=2.5mm
ACVG66=3.0mm
ACVL150=4.0mm



Screw (Grub)

MF = Mill Finish
SA = Silver Anodised
KL = Basic Colour
HP = Special Colour
SSC = Smooth Satin Chrome
SMC = Smokey Chrome
PC = Polished Chrome
W = White
Z = Black

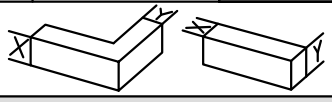

Section C

Eco Futural
Sections
Scale Elevations

Section C - Windows

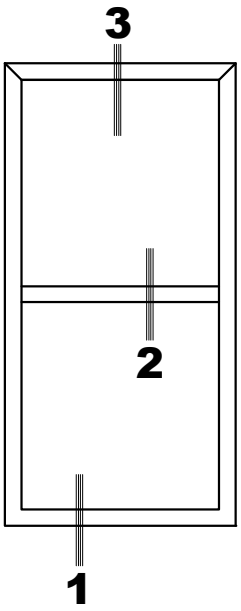

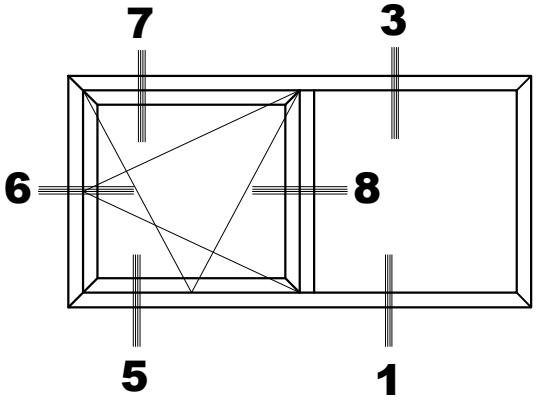

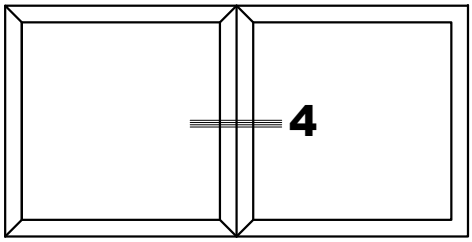

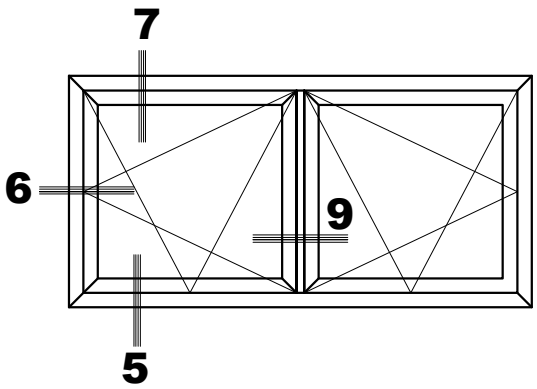

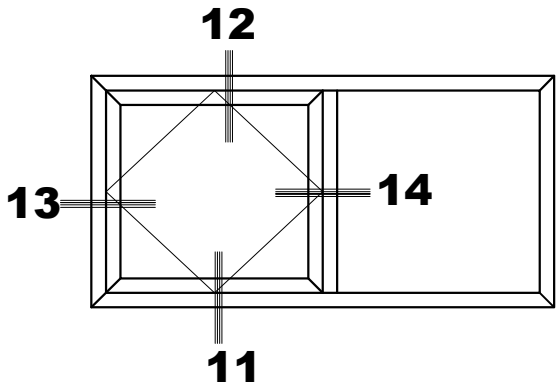

Detail 1A

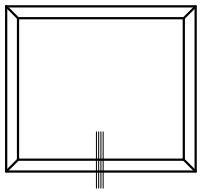

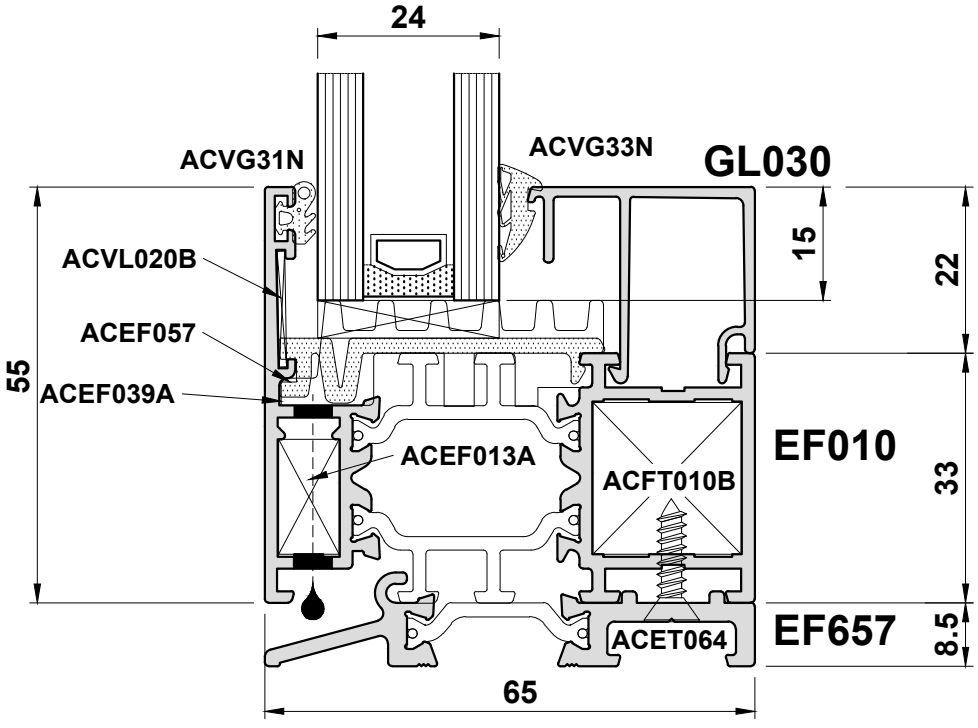

Do Not Scale From This Drawing

Detail 1B

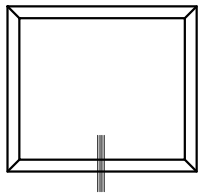

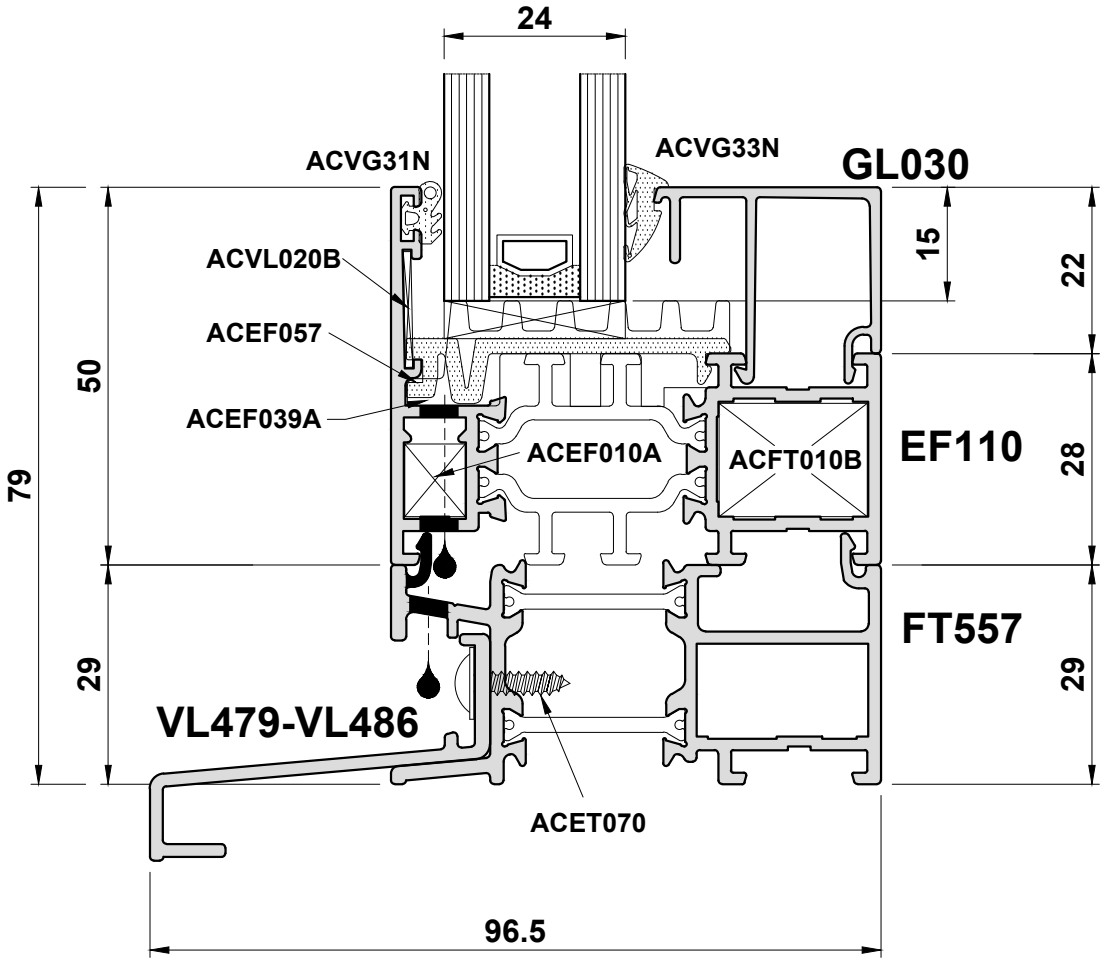

Do Not Scale From This Drawing

Detail 1C

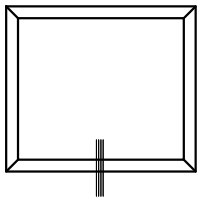

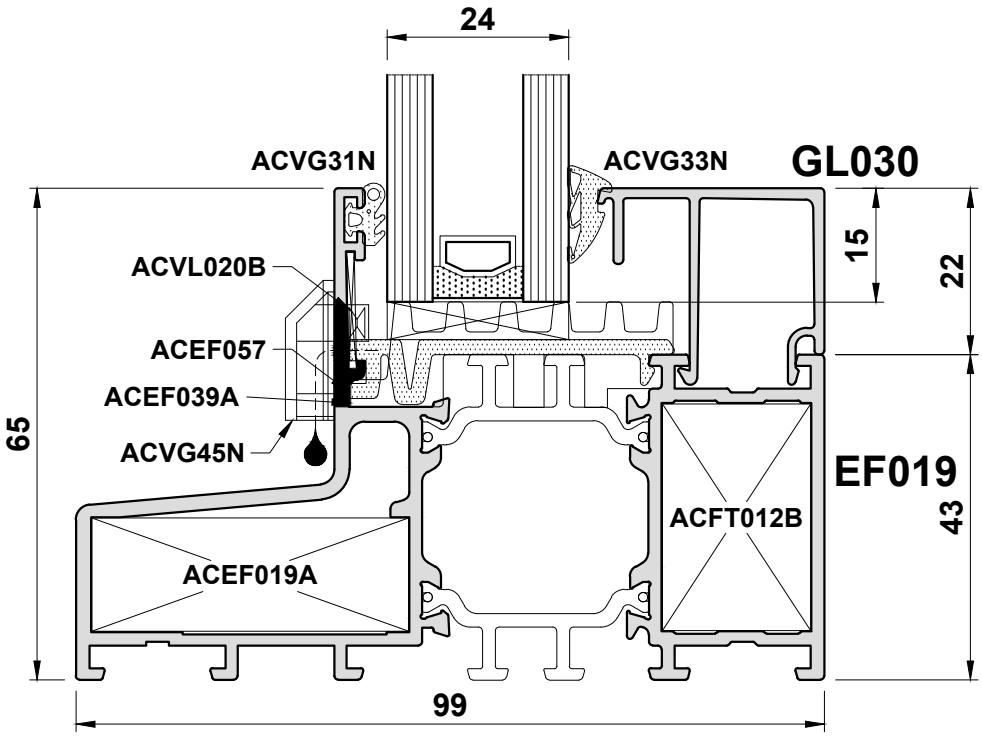

Do Not Scale From This Drawing

Detail 1D

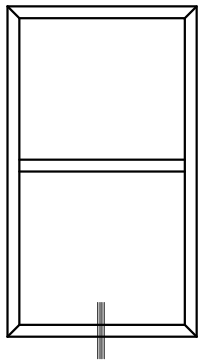

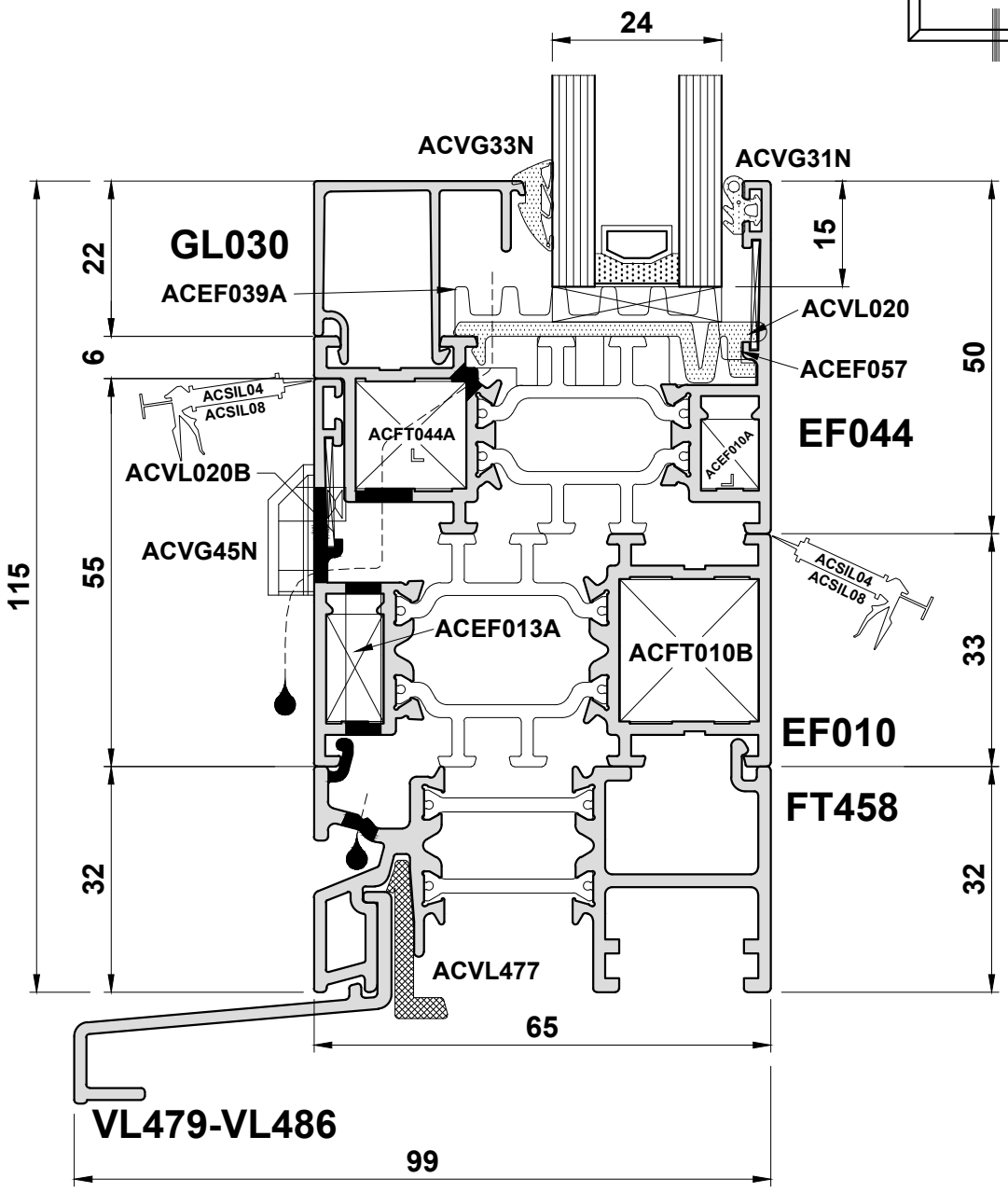

Do Not Scale From This Drawing

ISSUED: JUNE 2018

Detail 2A

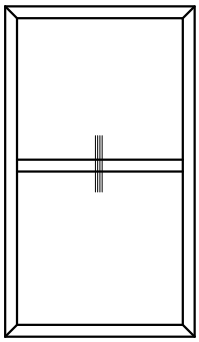

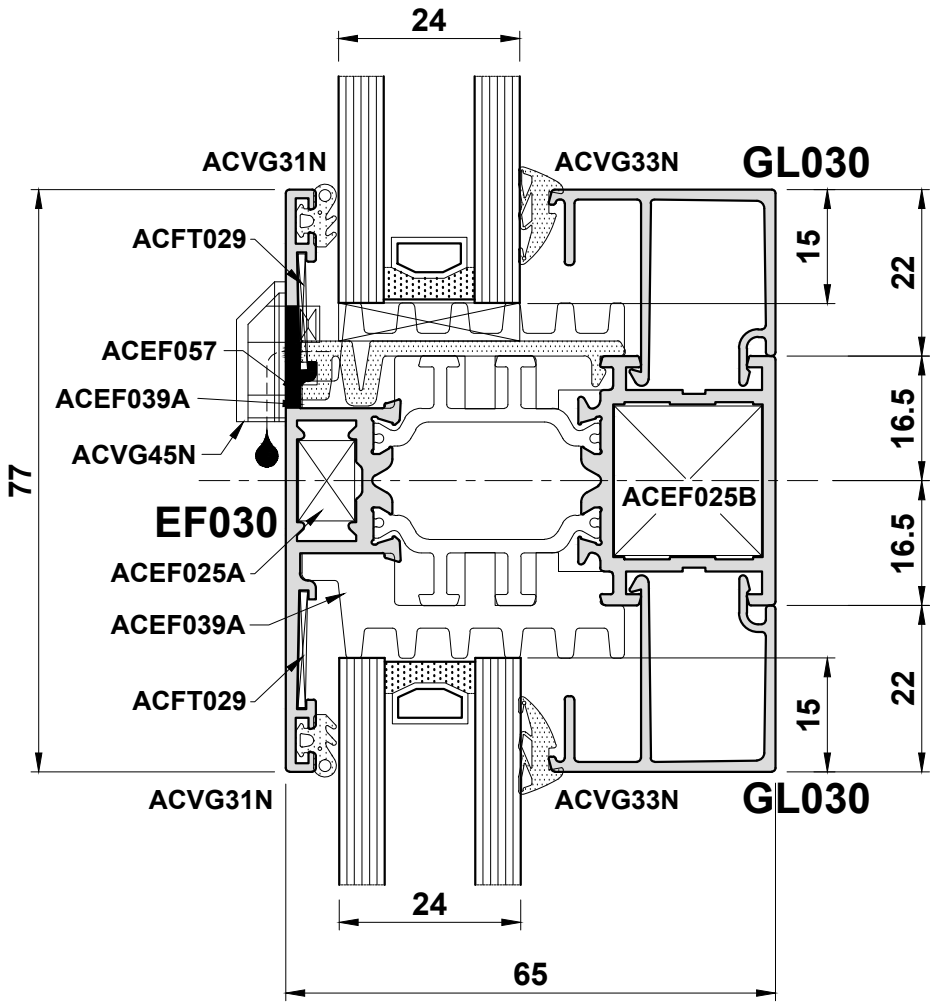

Do Not Scale From This Drawing

Detail 2B

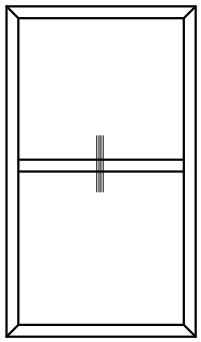

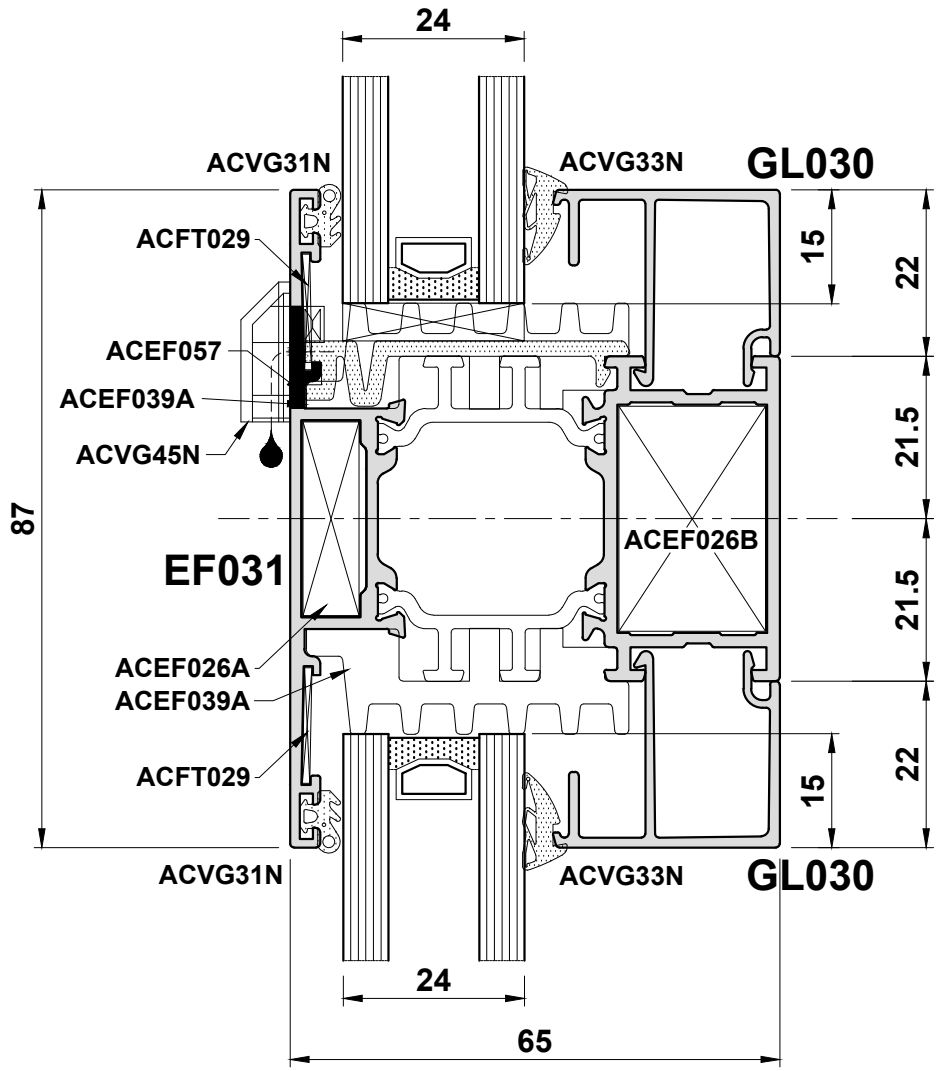

Do Not Scale From This Drawing

Detail 2C

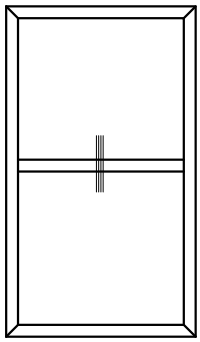

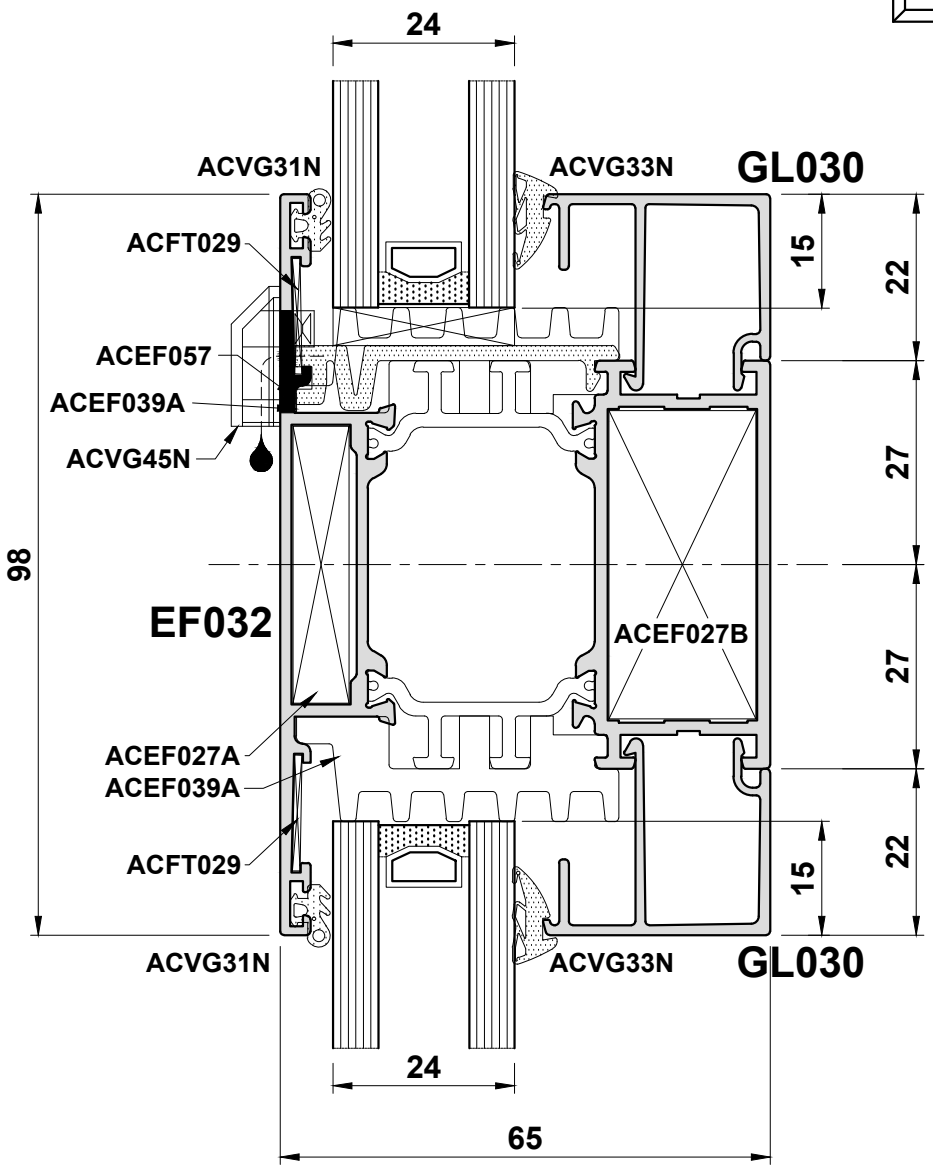

Do Not Scale From This Drawing

Detail 2D

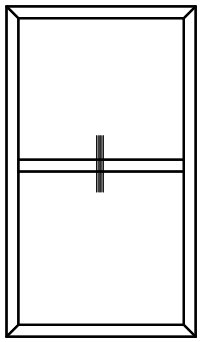

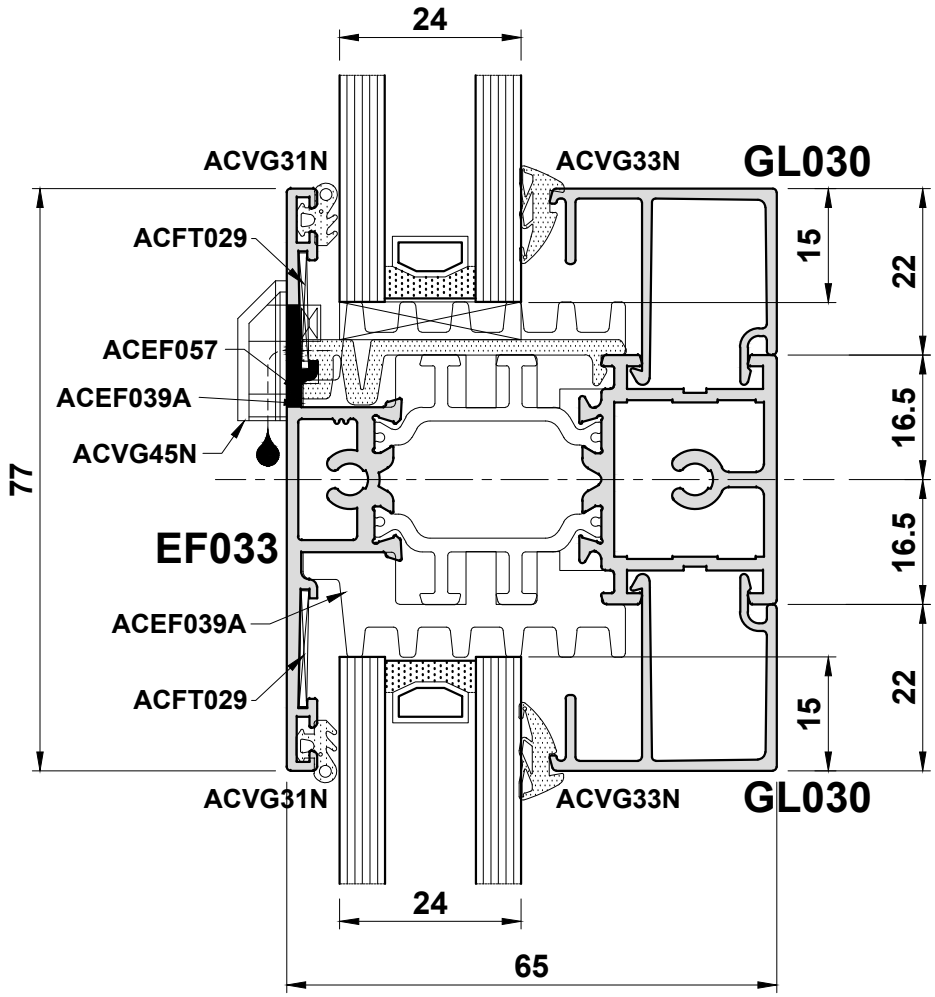

Do Not Scale From This Drawing

Detail 2E

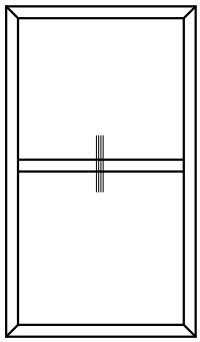

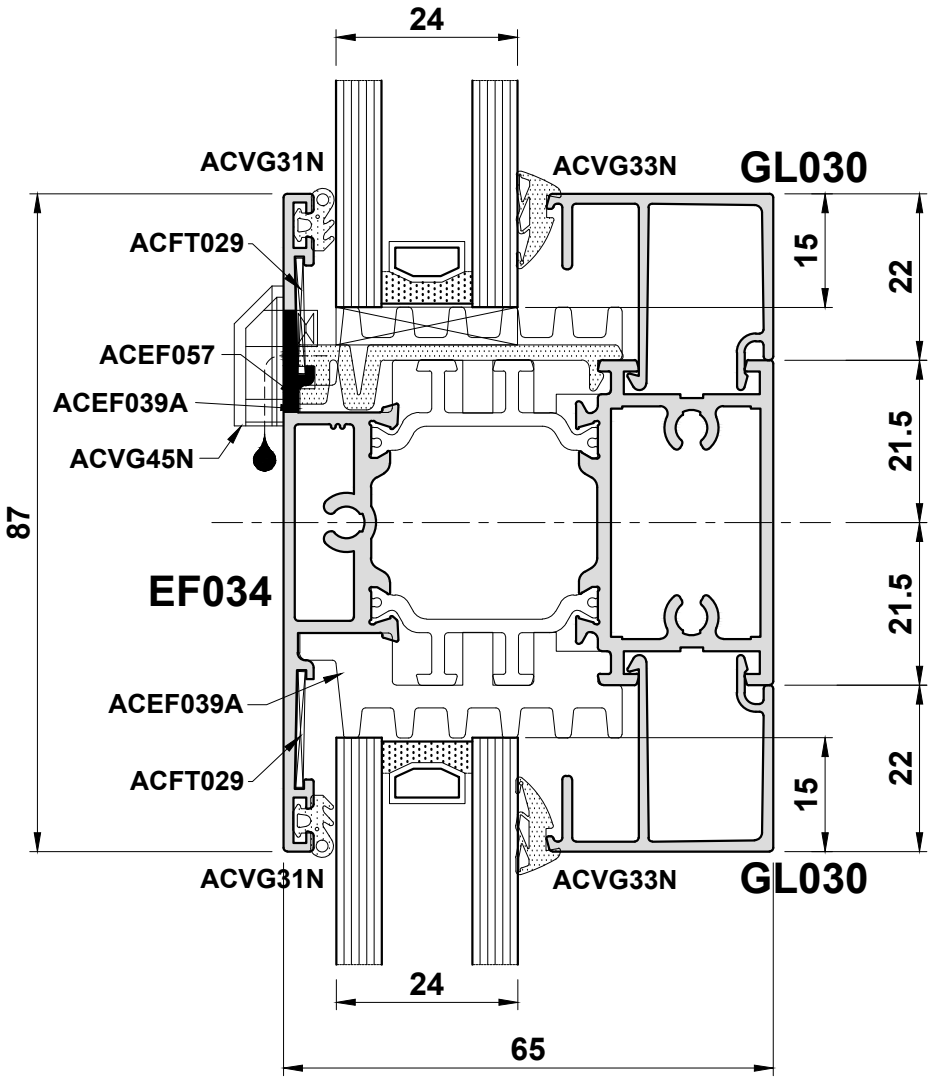

Do Not Scale From This Drawing

Detail 3A

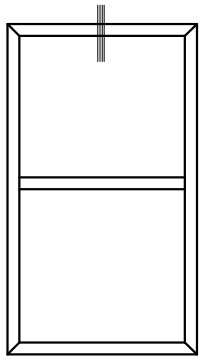

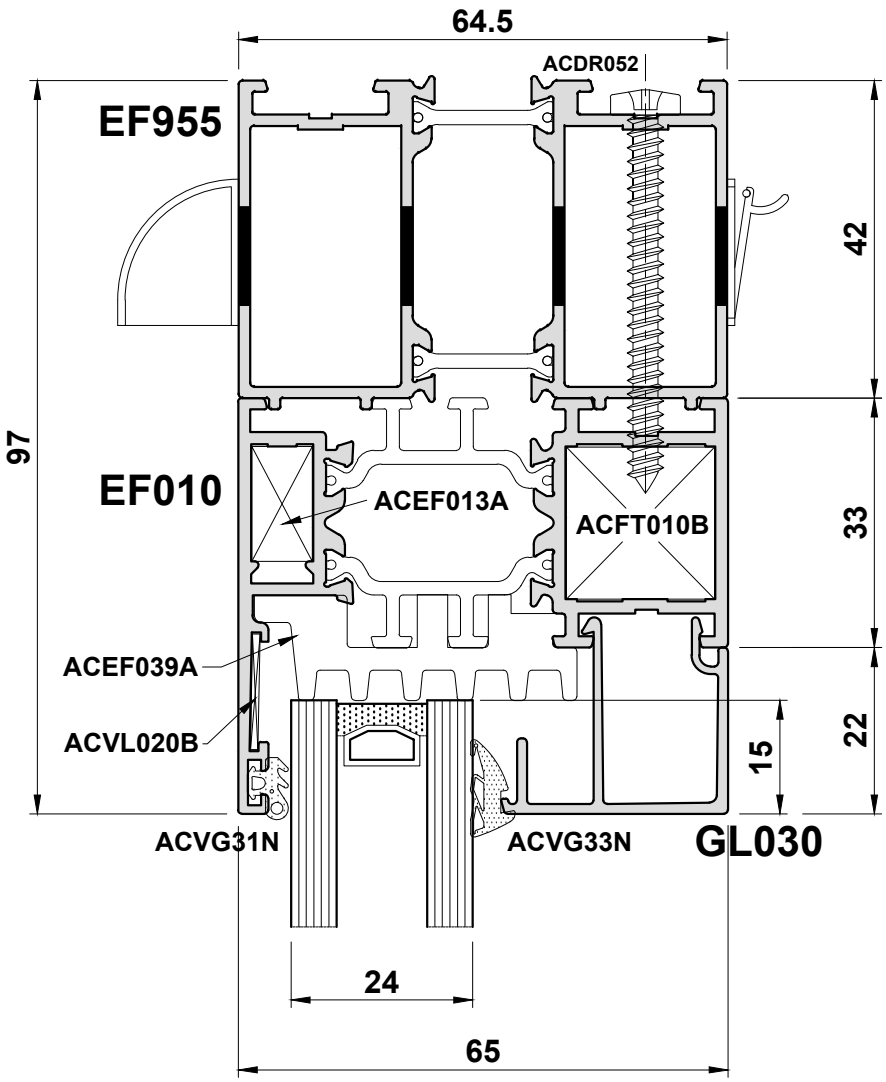

Do Not Scale From This Drawing

ISSUED: JUNE 2018

Detail 3B

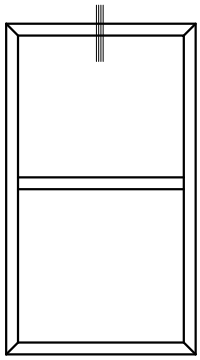

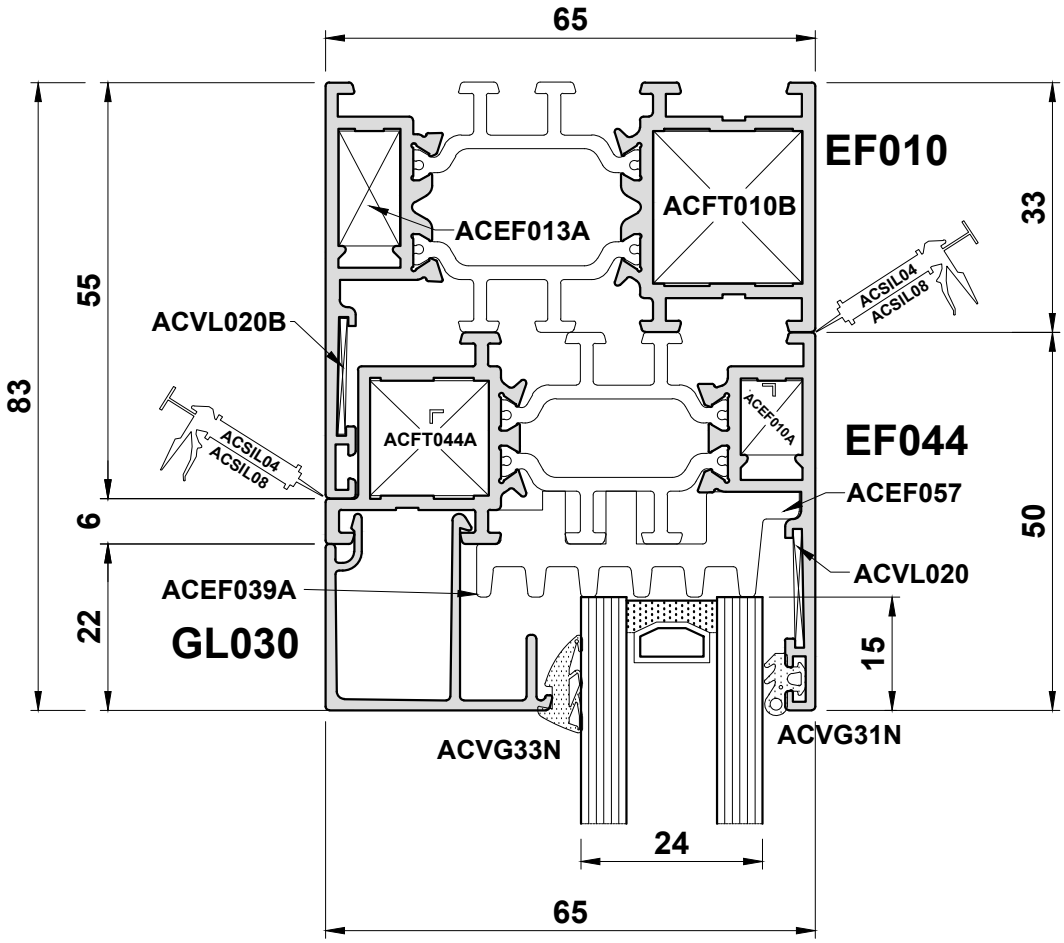

Do Not Scale From This Drawing

Detail 3C

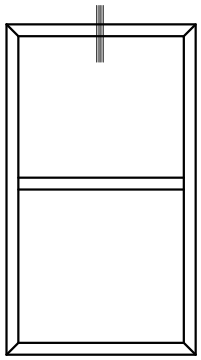

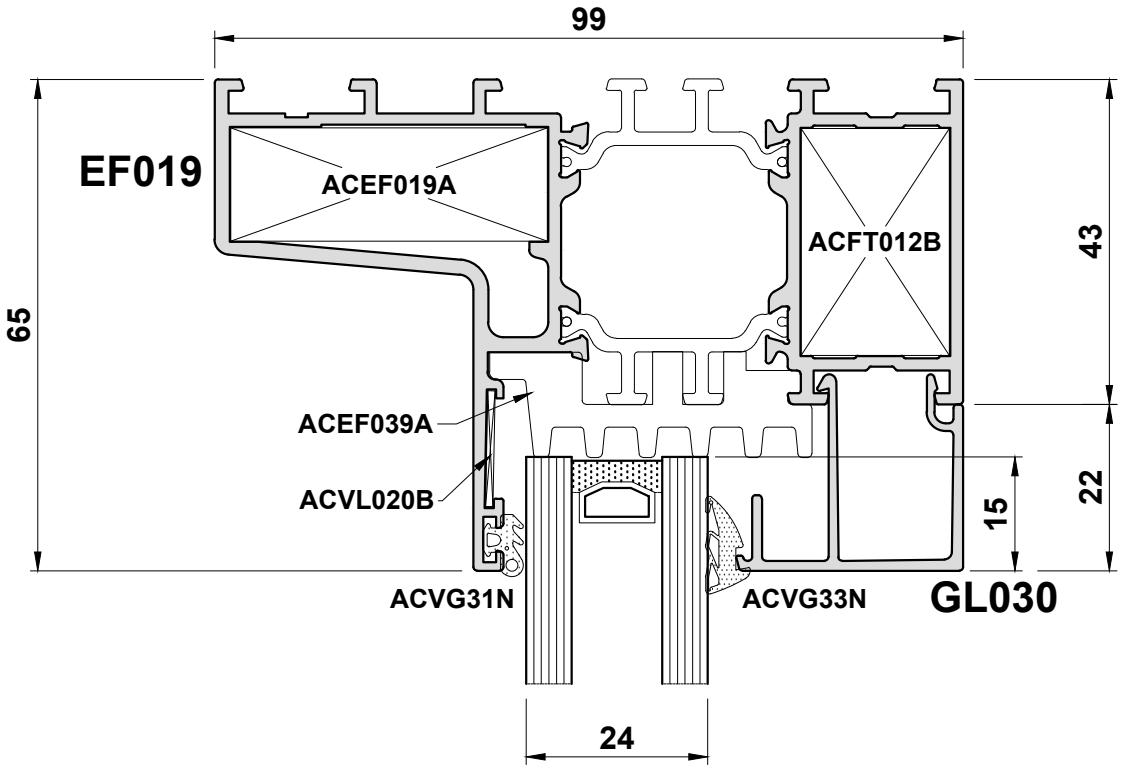

Do Not Scale From This Drawing

Detail 4A & 4B

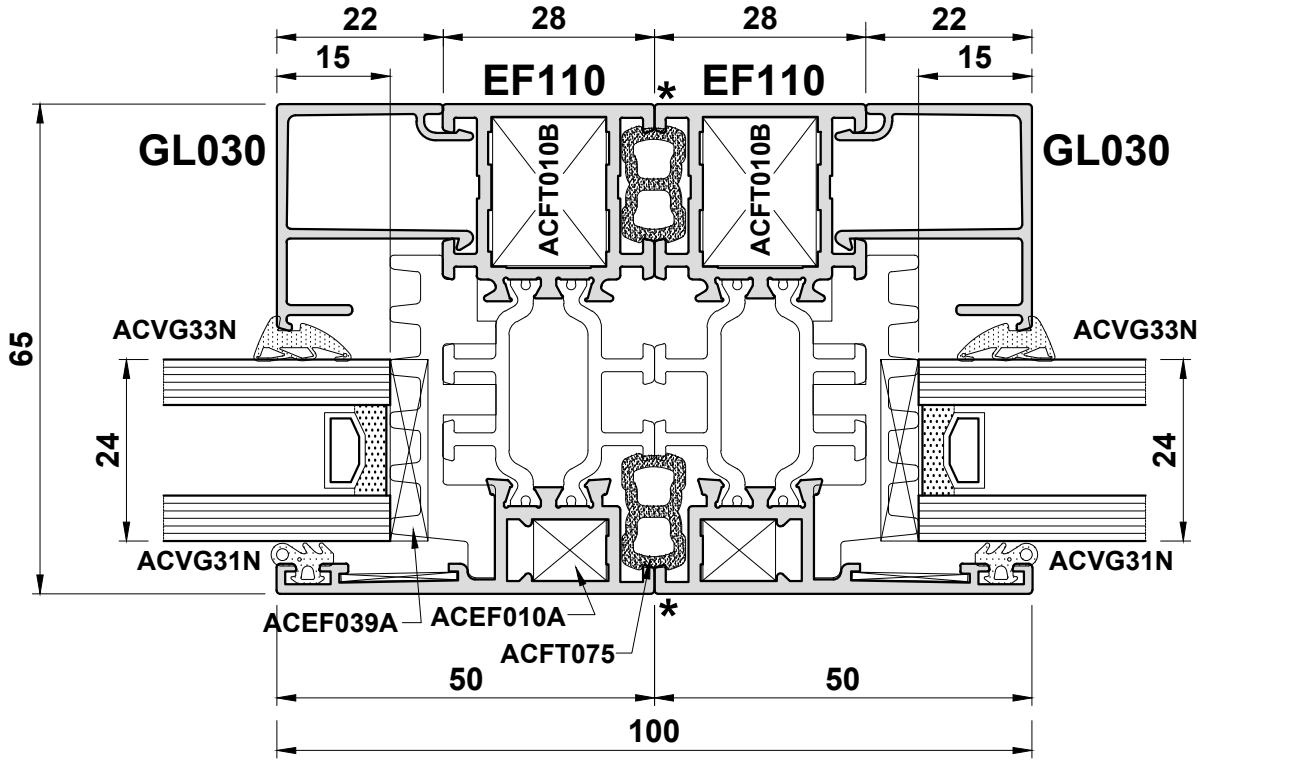

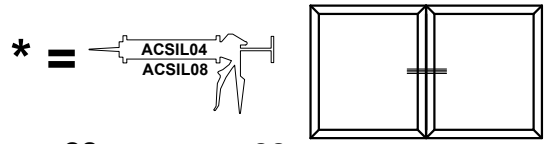

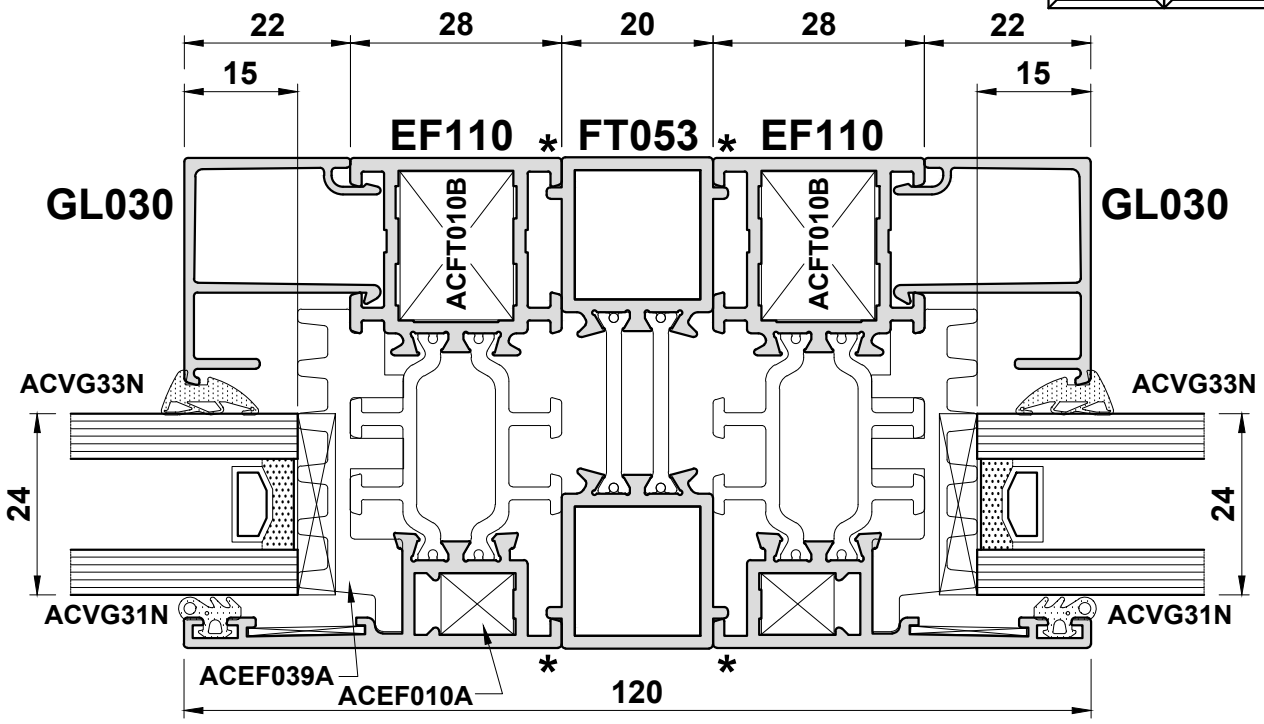

Do Not Scale From This Drawing

Detail 4C

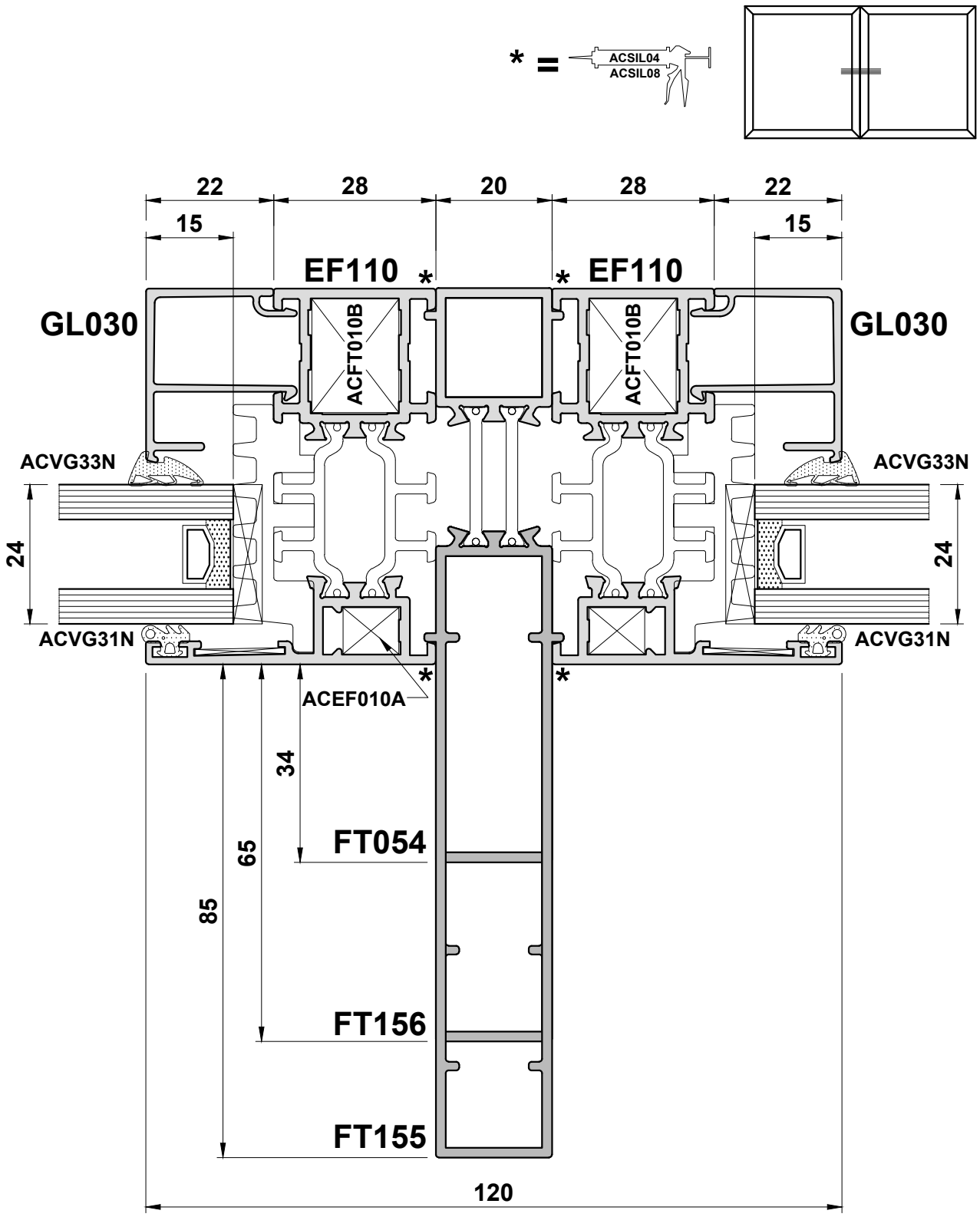

Do Not Scale From This Drawing

Detail 4D

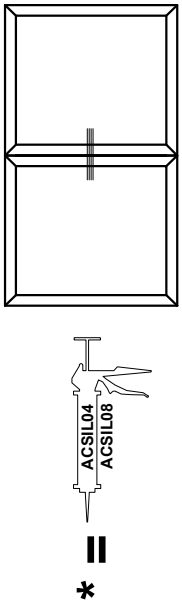

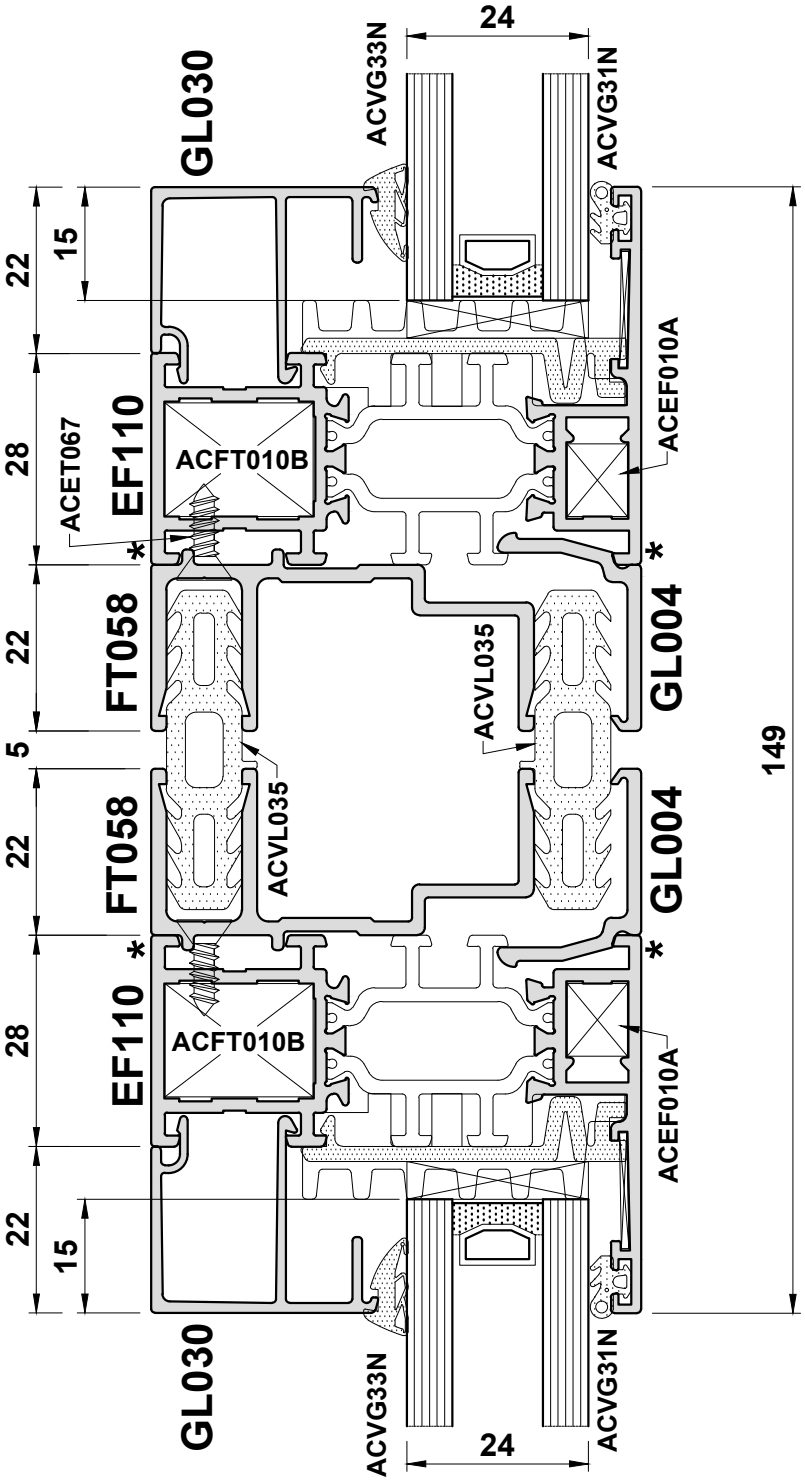

Do Not Scale From This Drawing

Detail 5A

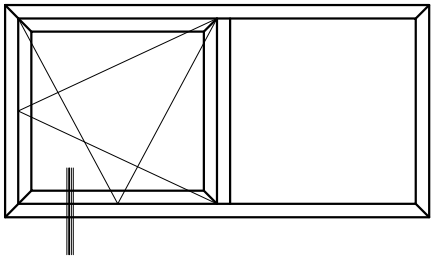

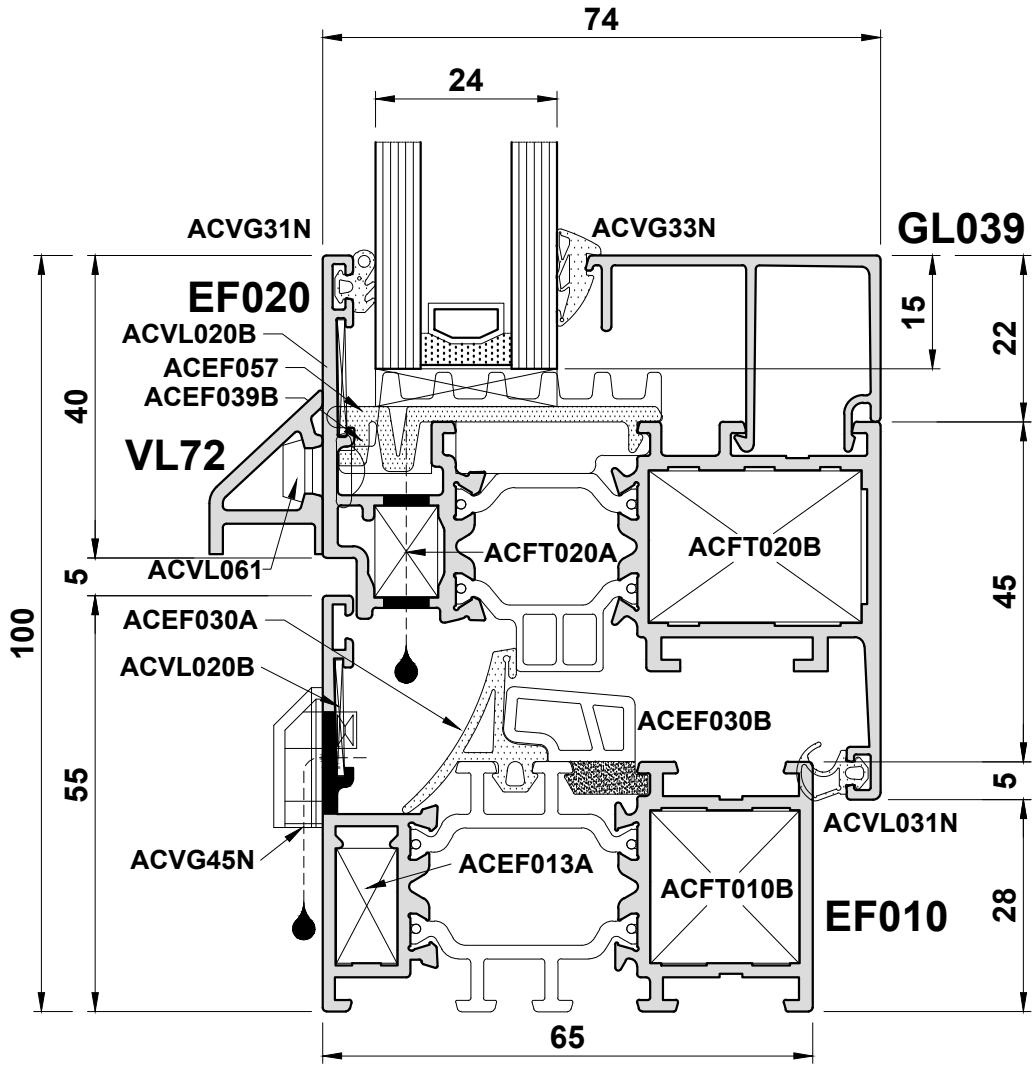

Do Not Scale From This Drawing

Detail 5B

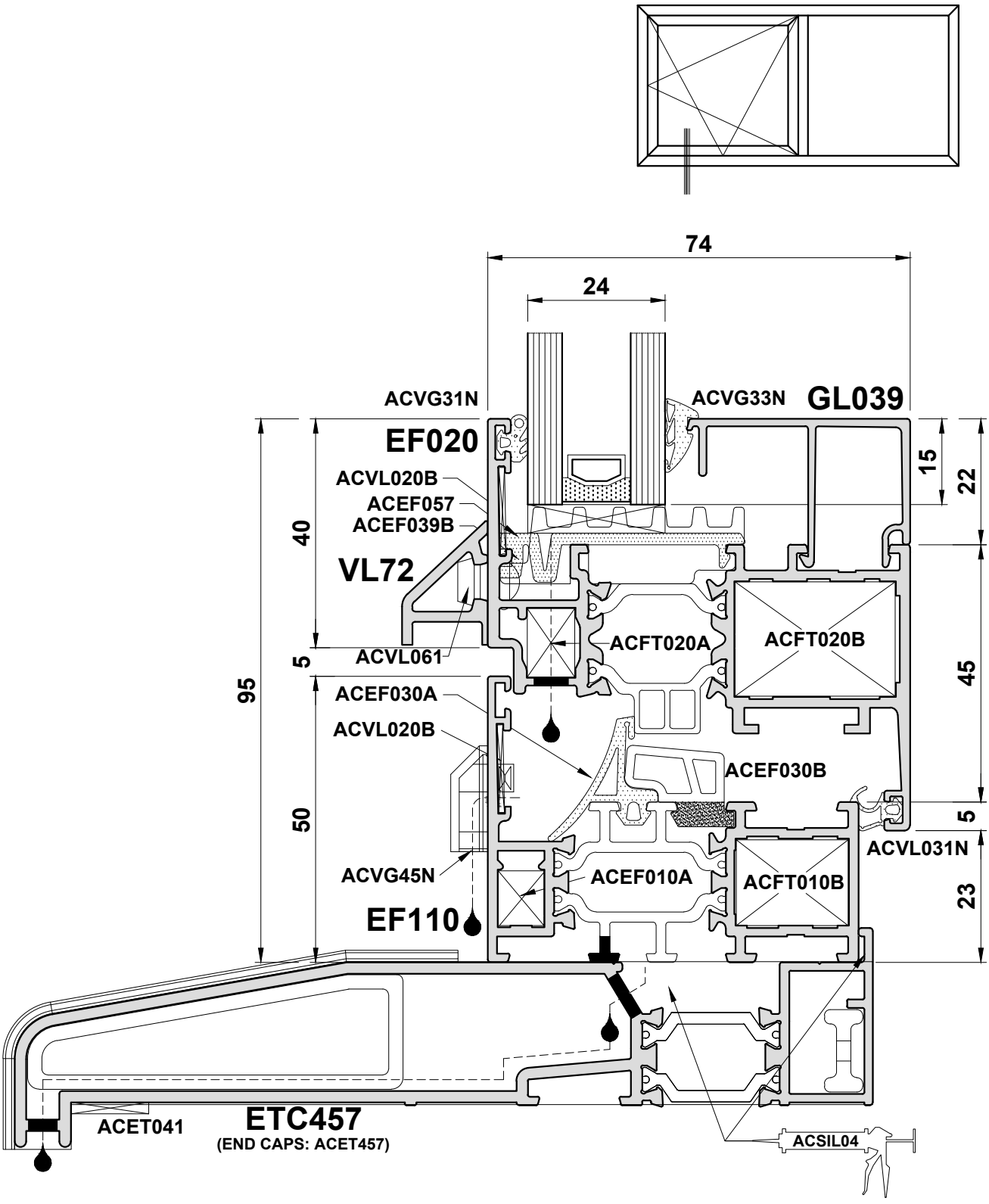

Do Not Scale From This Drawing

Detail 5C

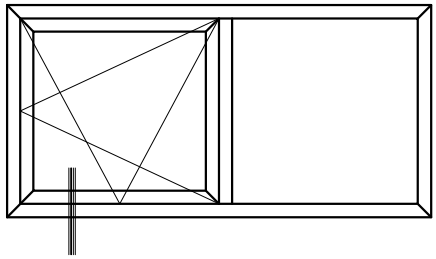

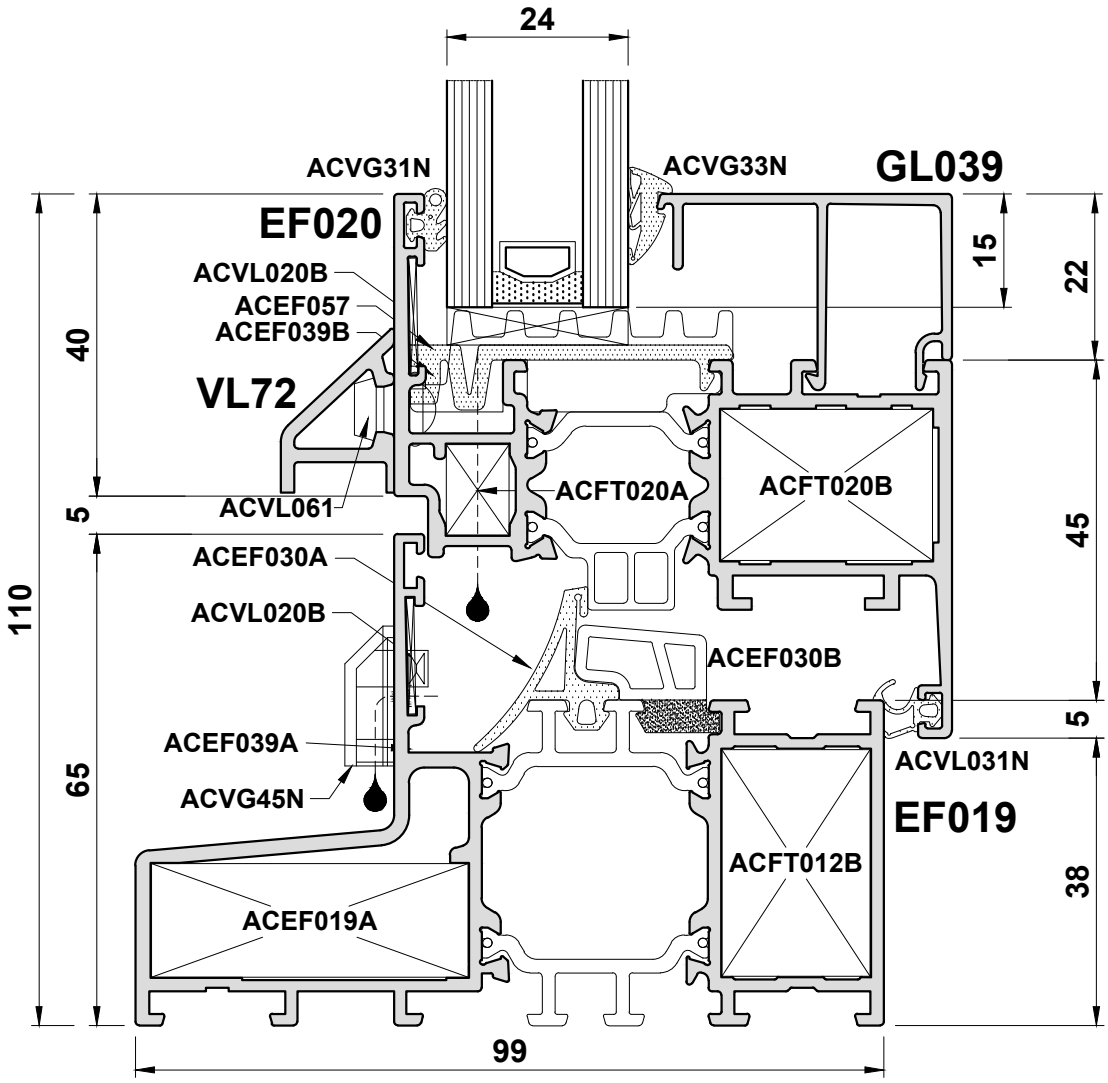

Do Not Scale From This Drawing

Detail 5D

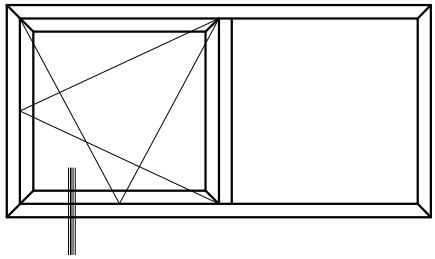

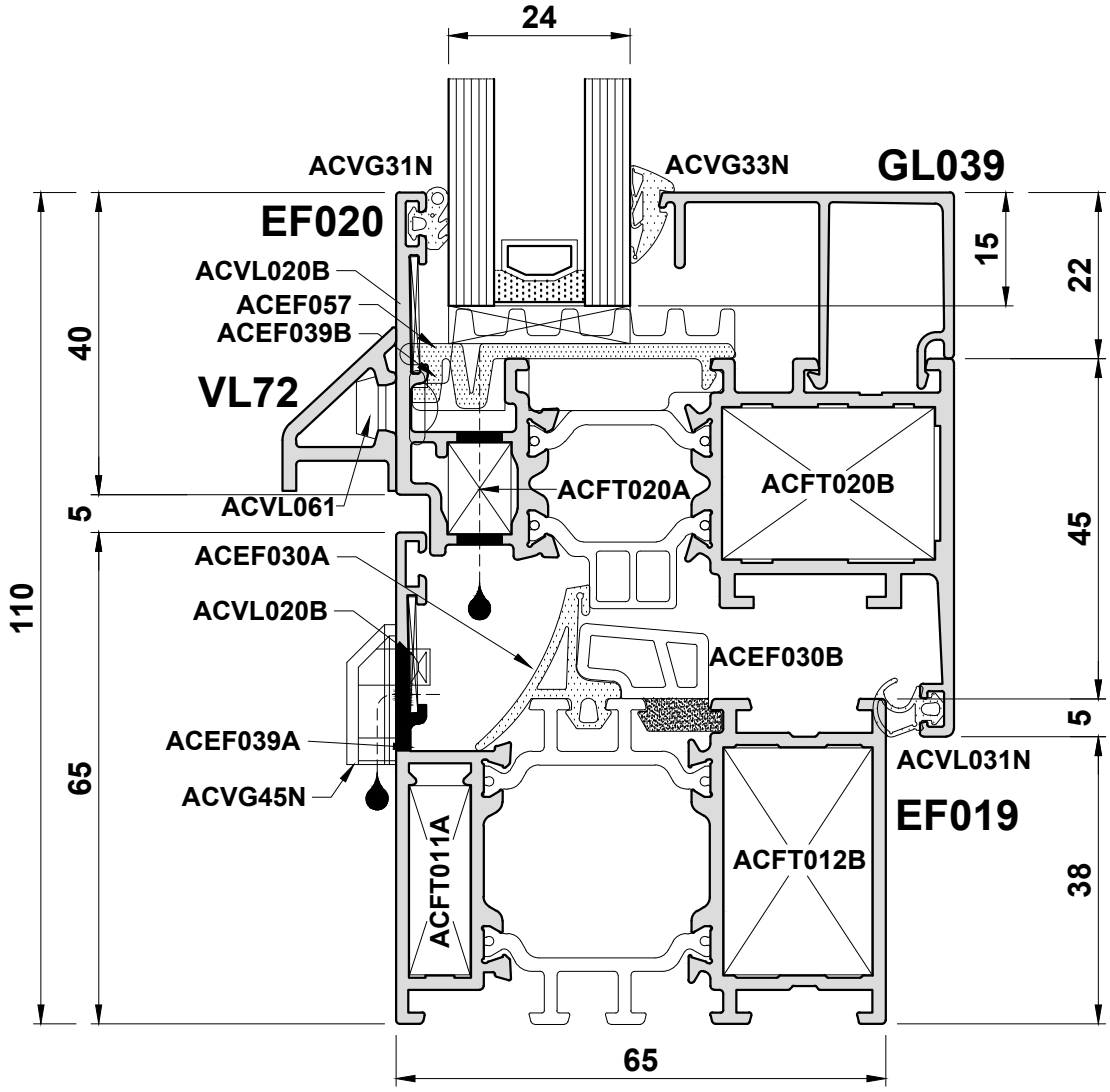

Do Not Scale From This Drawing

Detail 6A

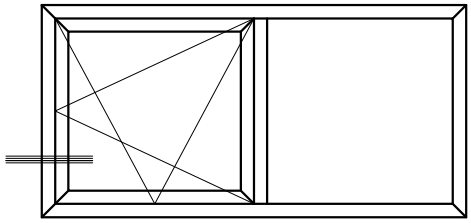

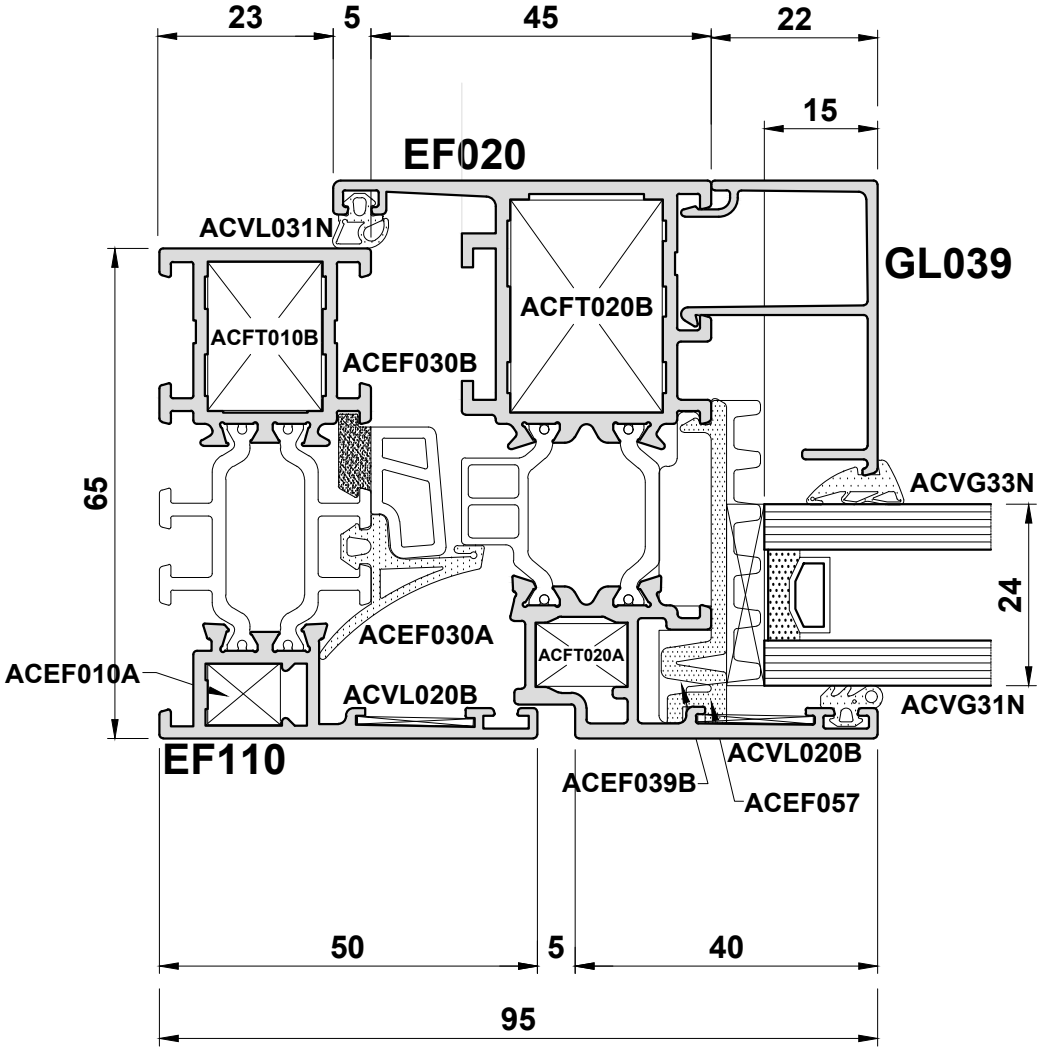

Do Not Scale From This Drawing

Detail 6B

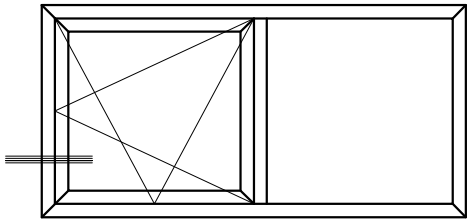

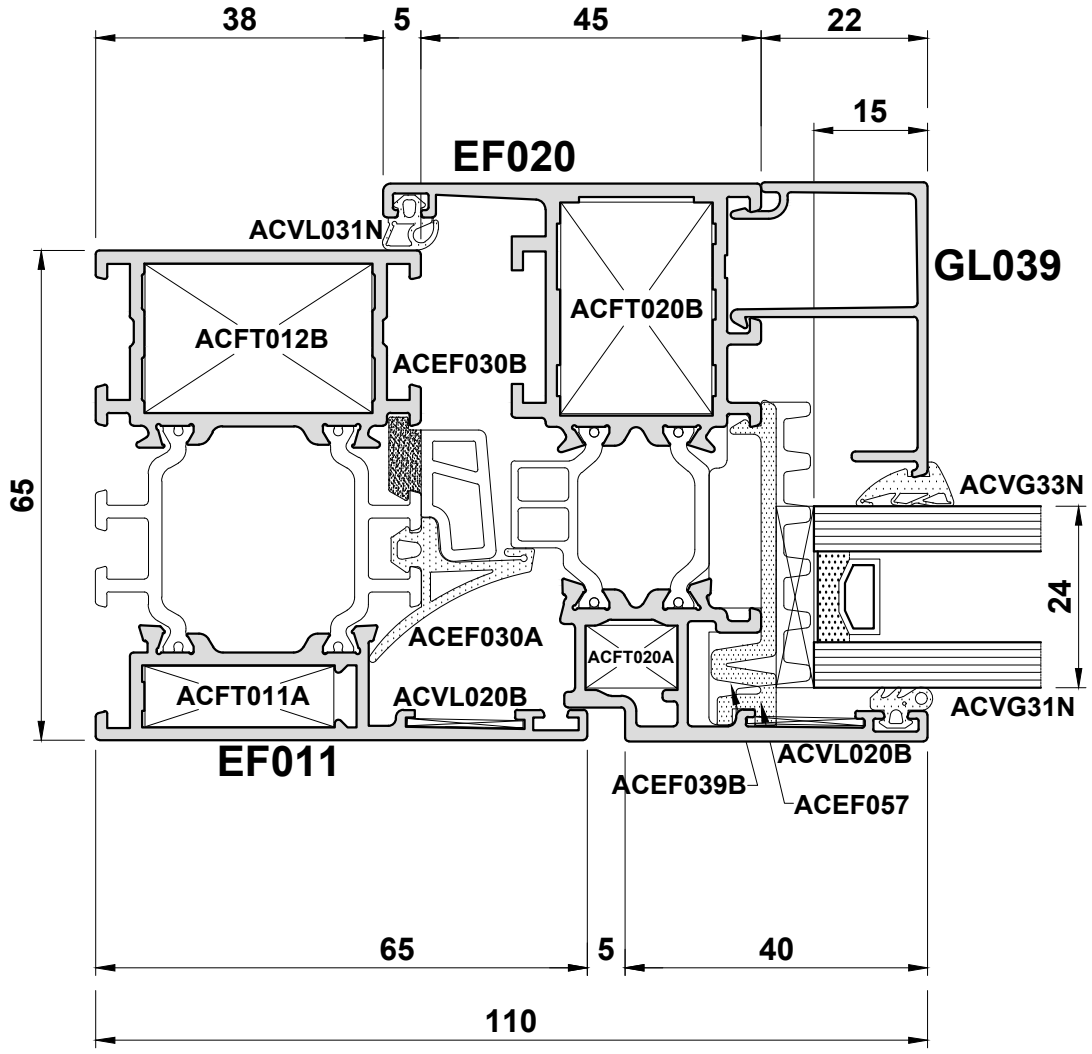

Do Not Scale From This Drawing

Detail 6C

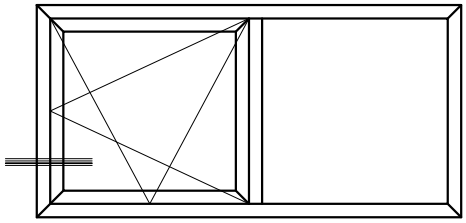

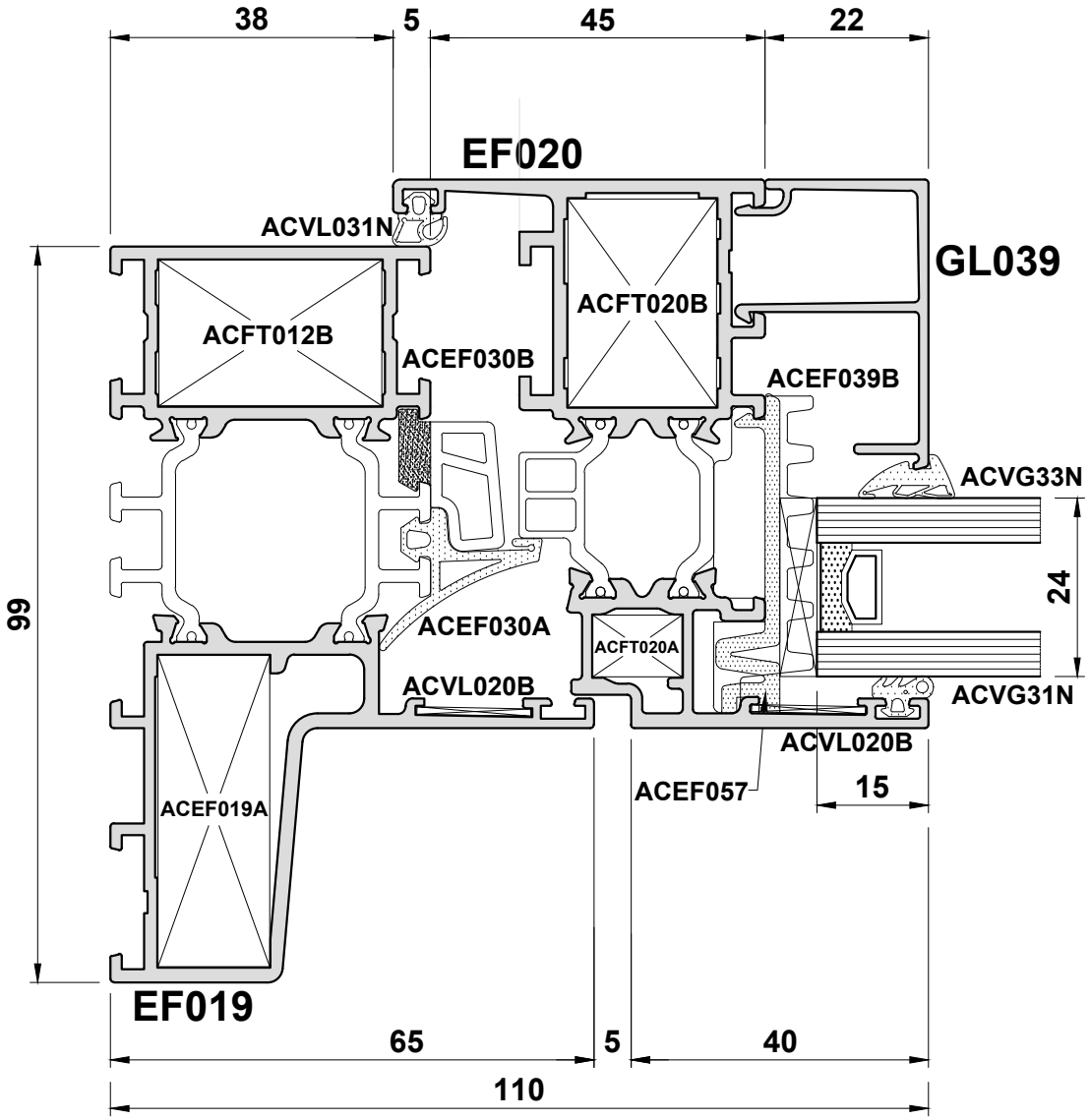

Do Not Scale From This Drawing

Detail 7A

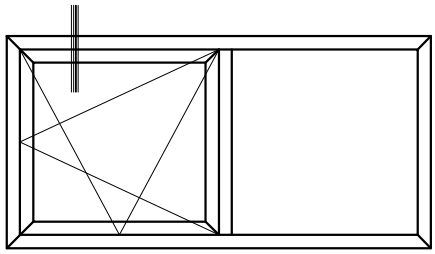

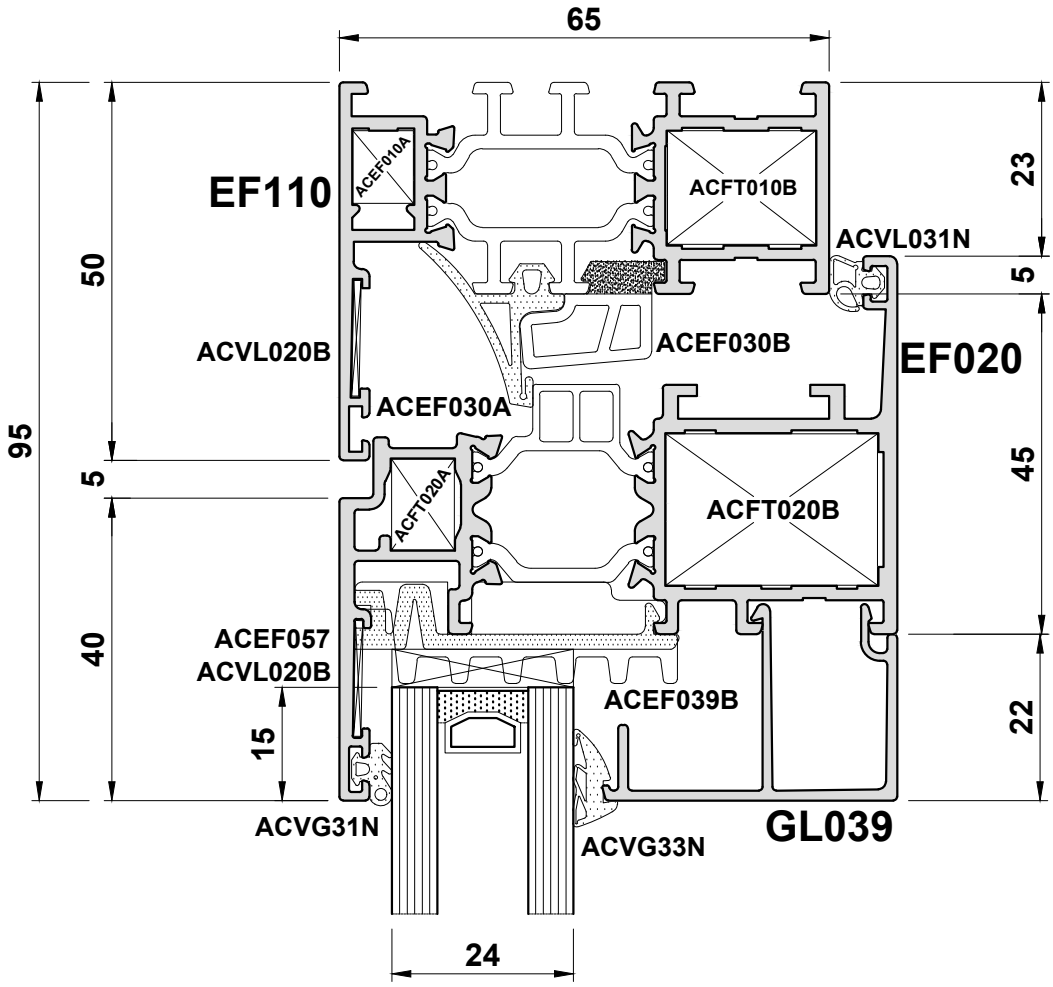

Do Not Scale From This Drawing

Detail 7B

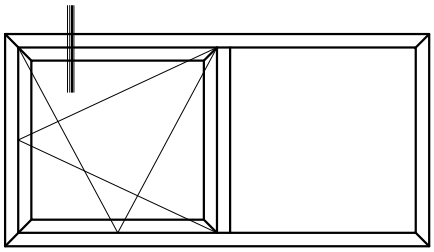

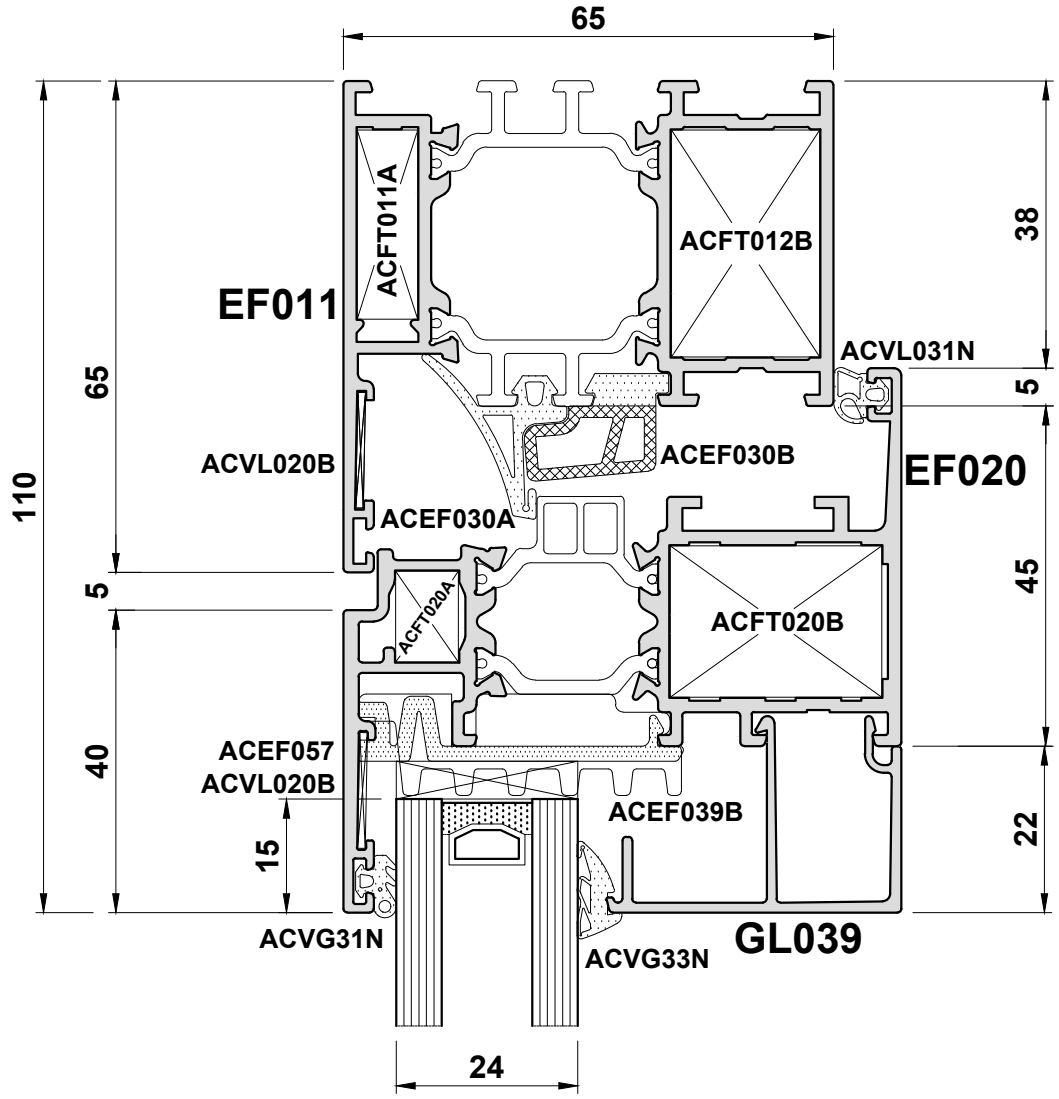

Do Not Scale From This Drawing

Detail 7C

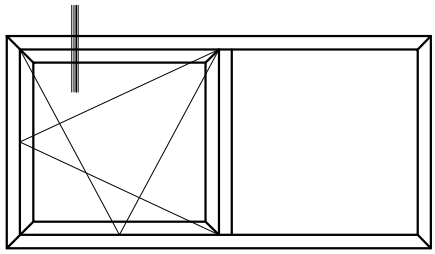

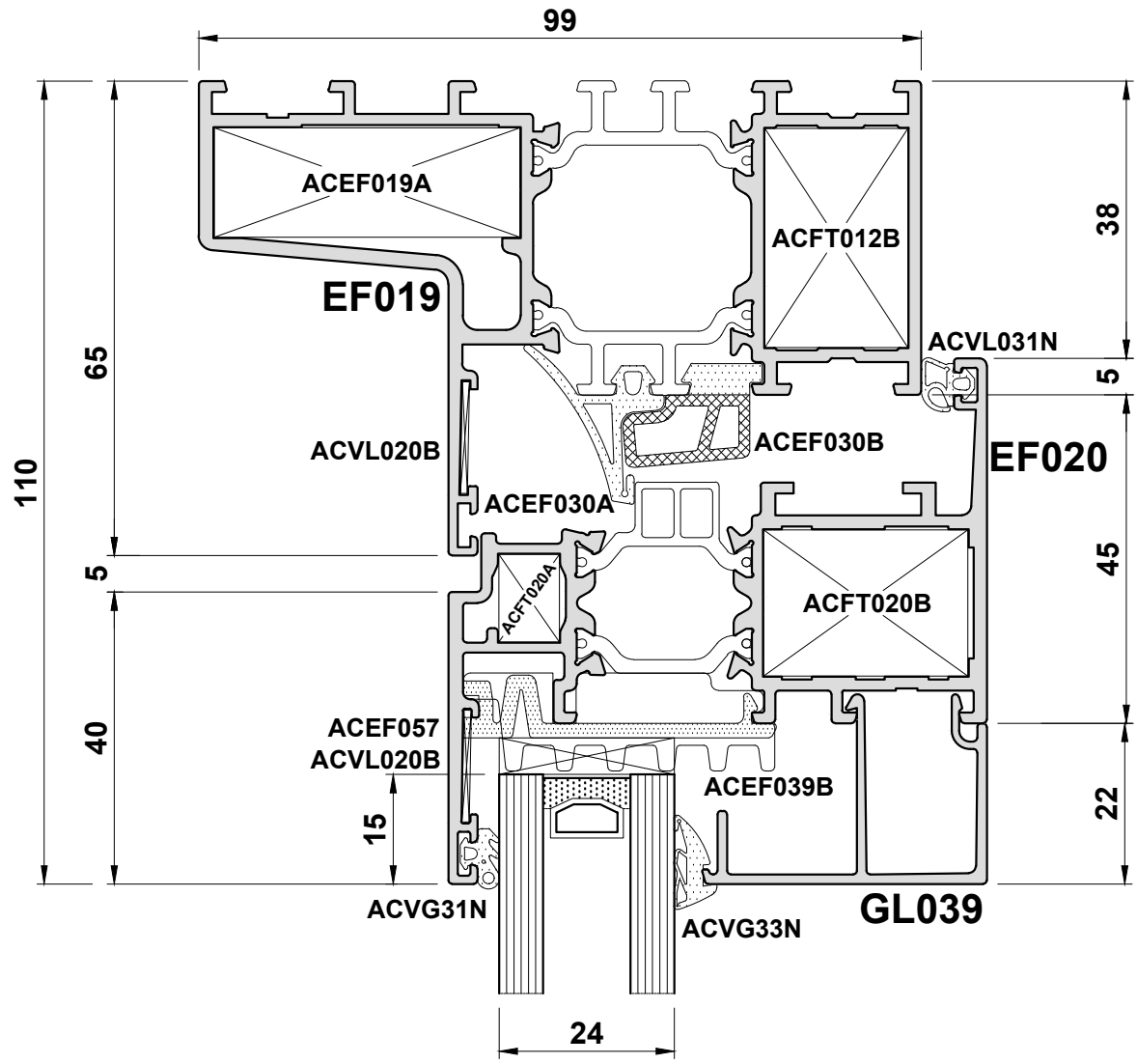

Do Not Scale From This Drawing

Detail 8

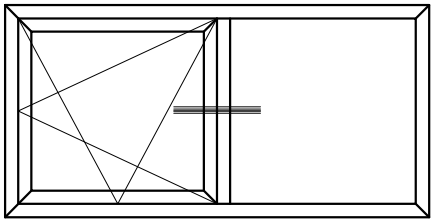

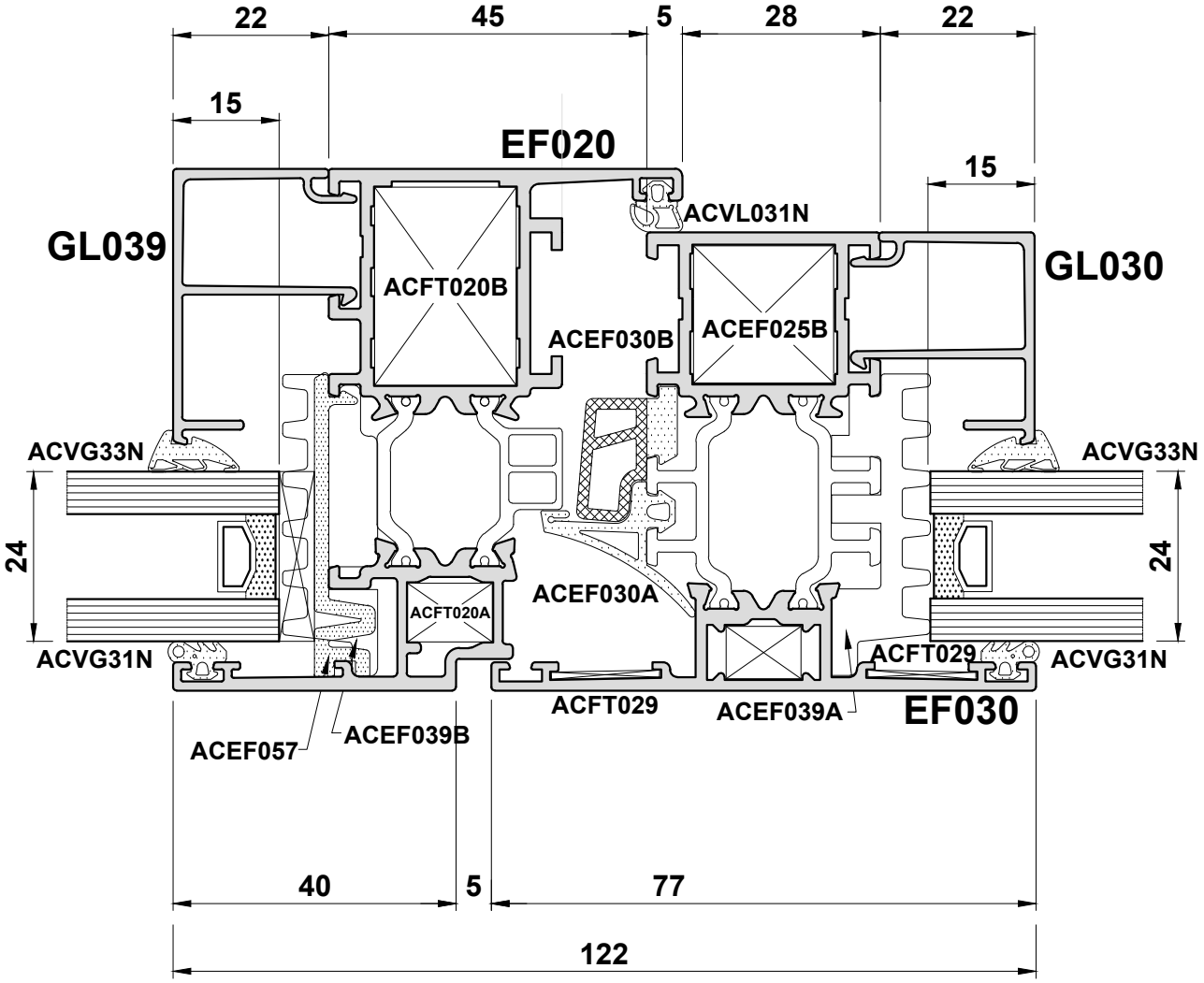

Do Not Scale From This Drawing

Detail 9

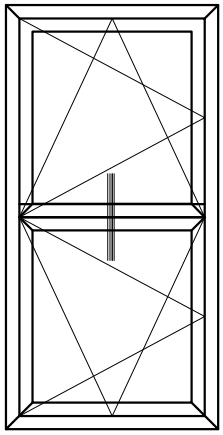

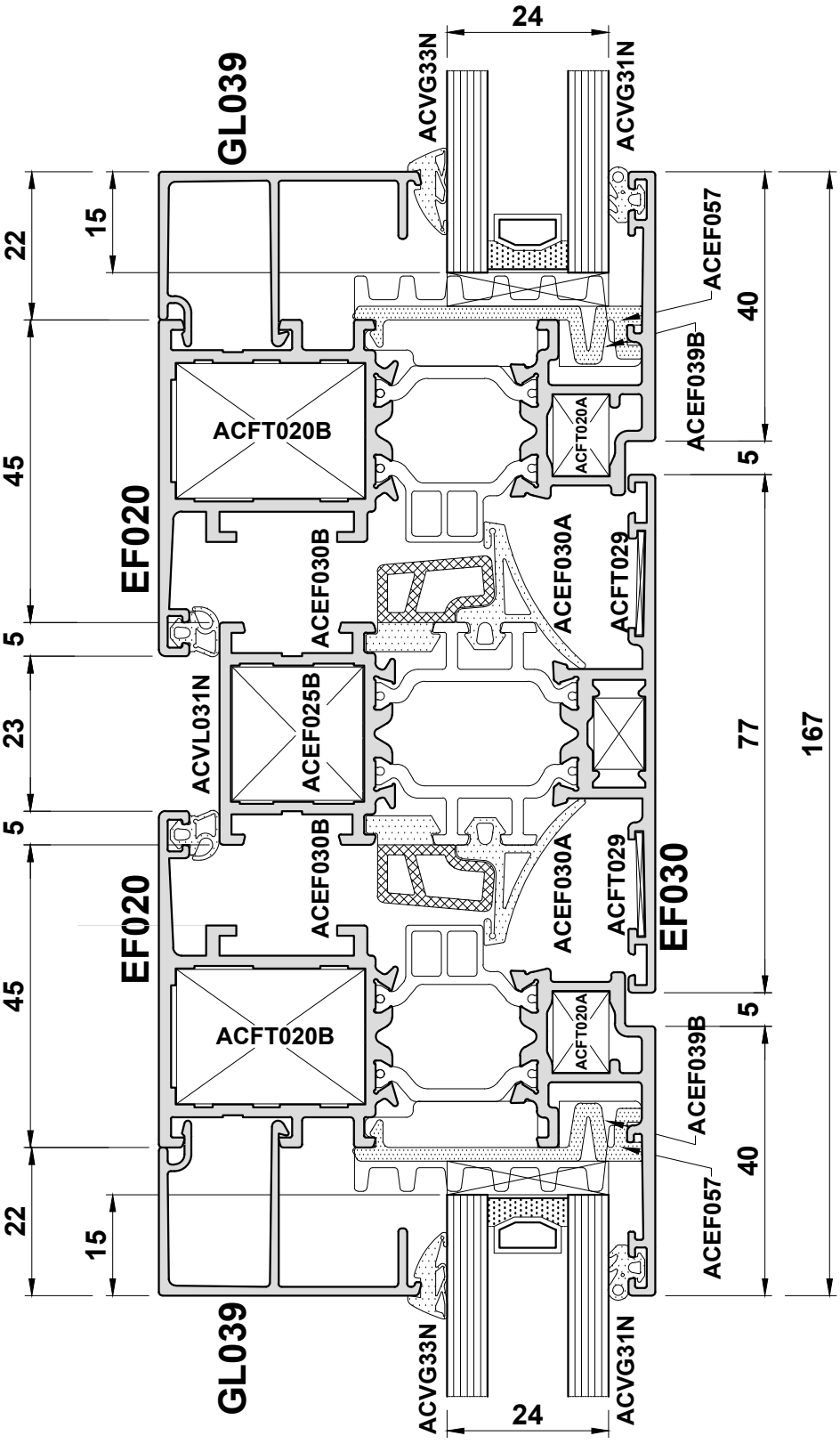

Do Not Scale From This Drawing

Detail 10

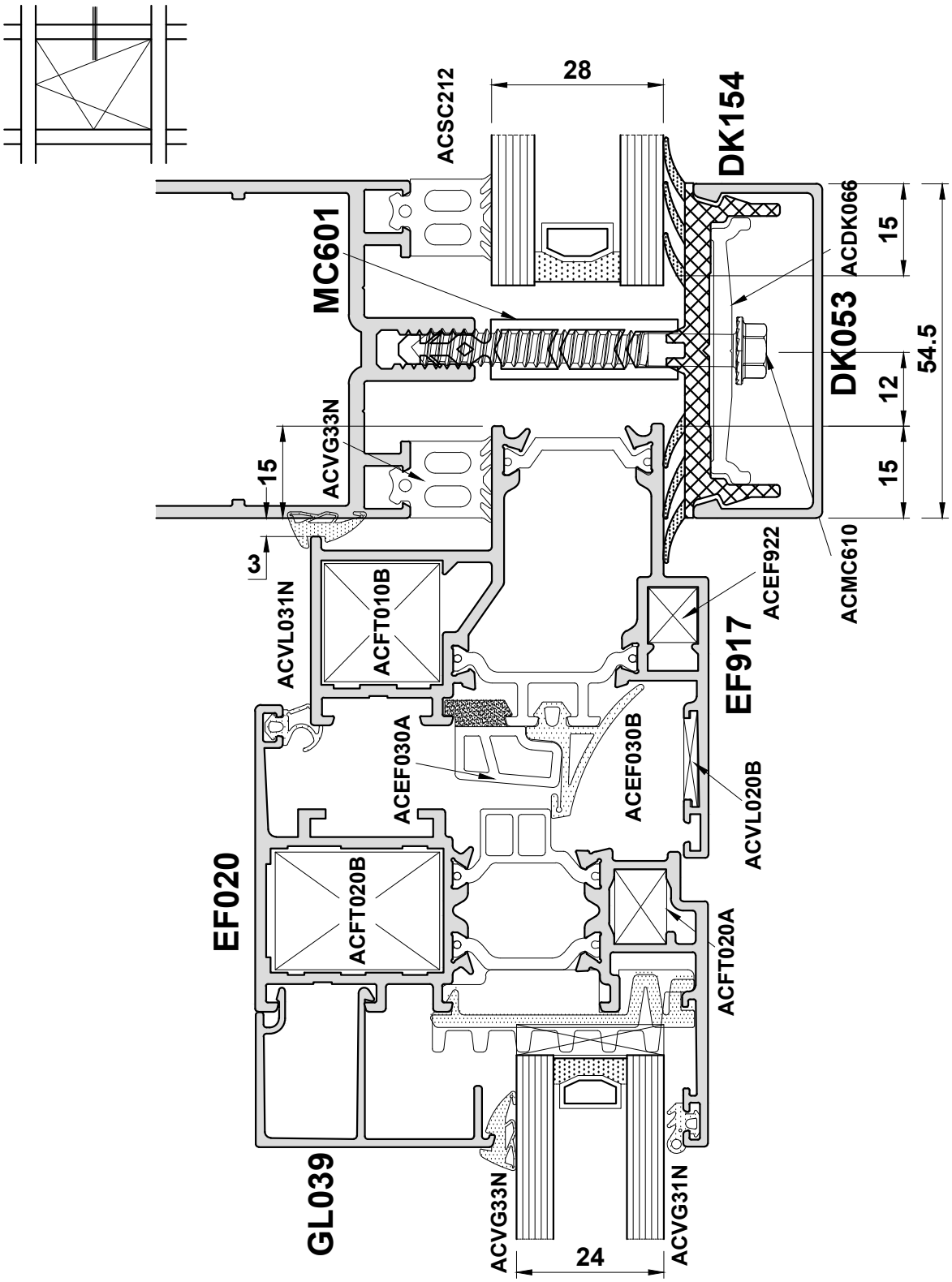

Do Not Scale From This Drawing

Detail 11

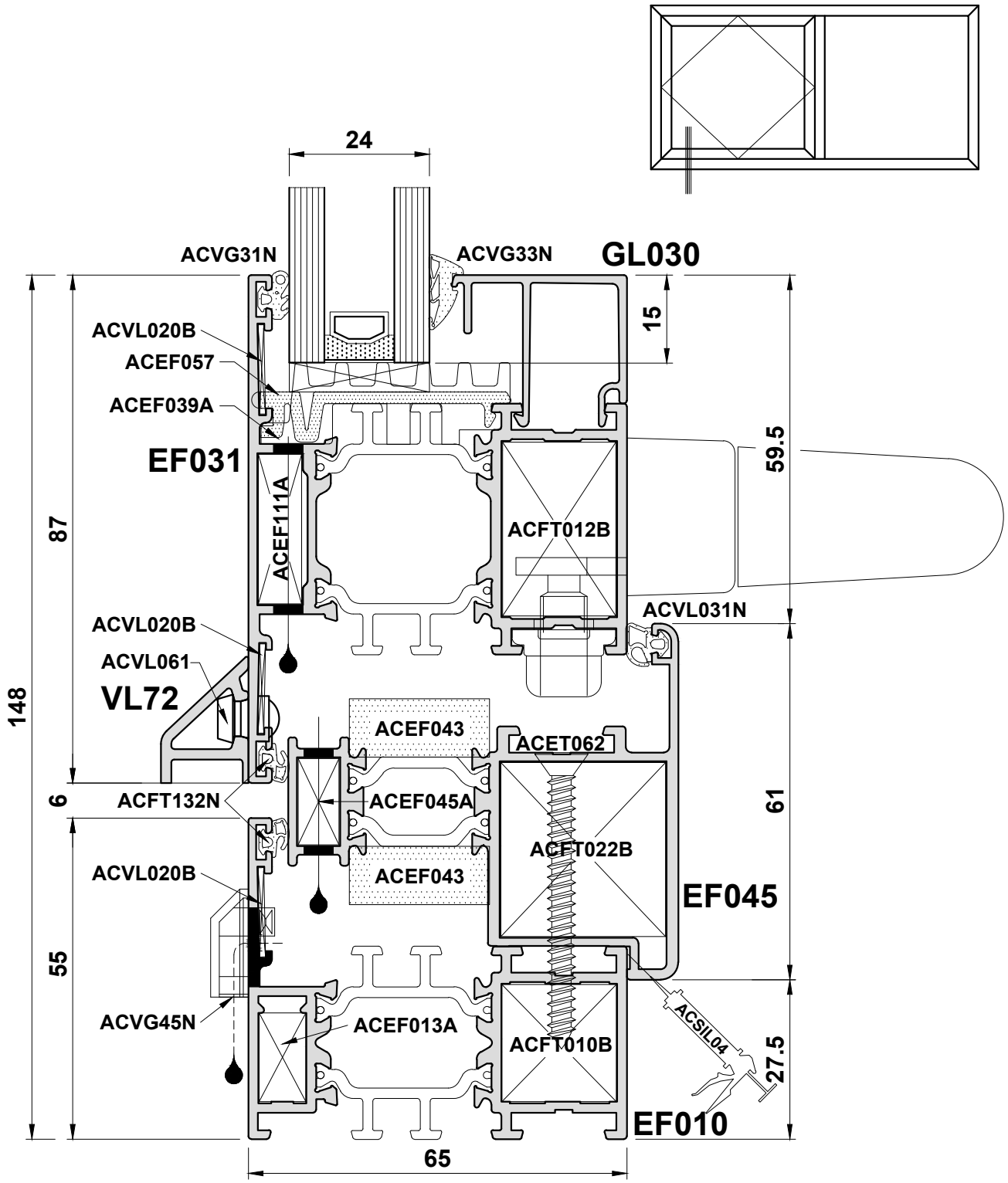

Do Not Scale From This Drawing

Detail 12

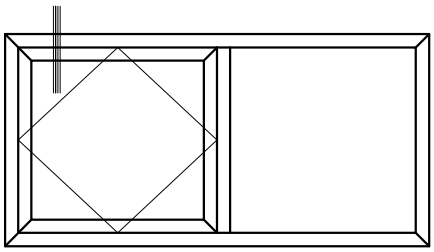

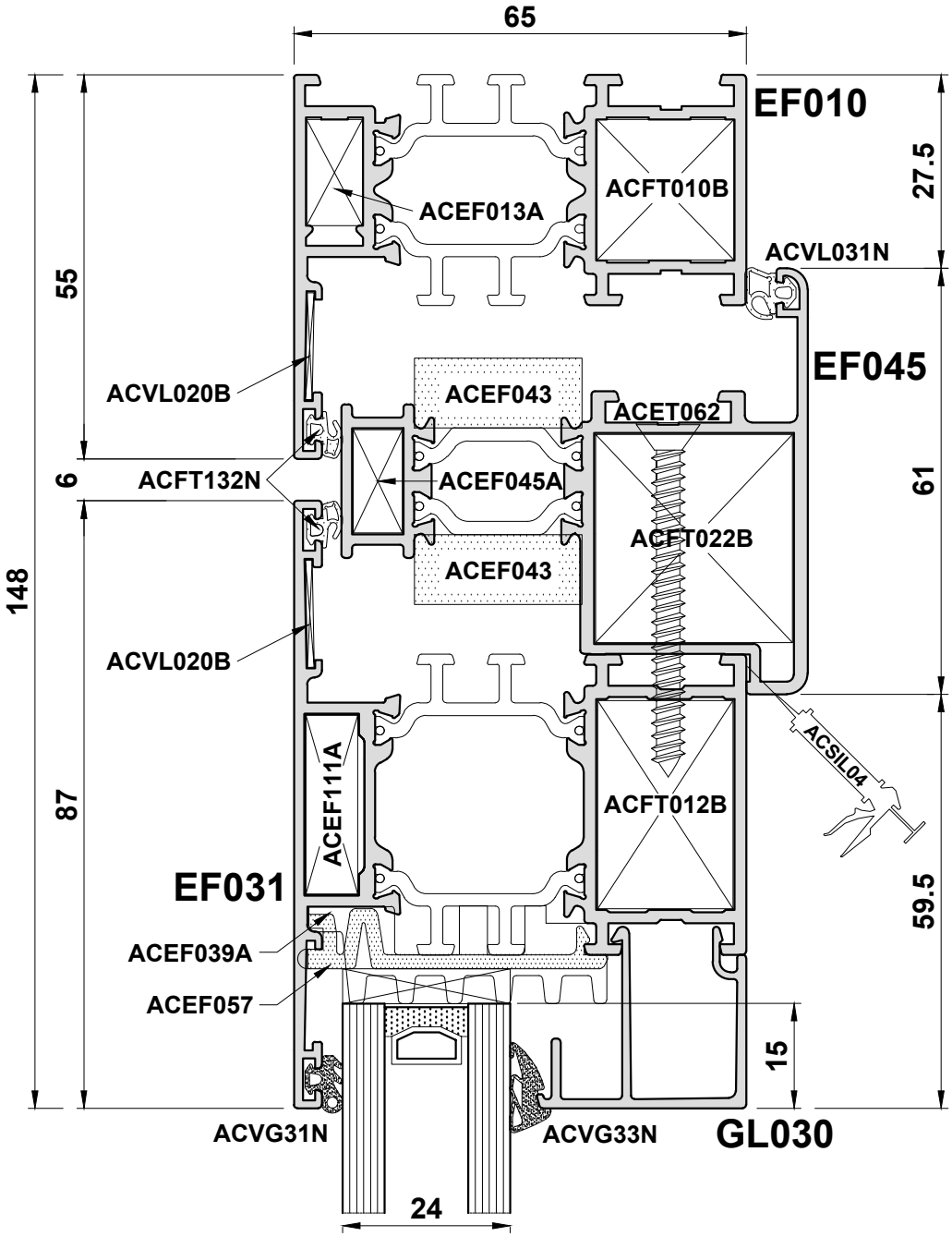

Do Not Scale From This Drawing

Detail 13

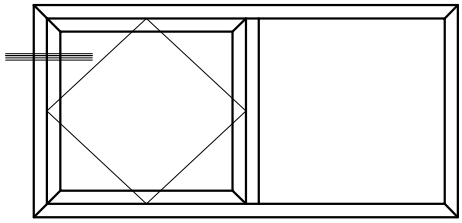

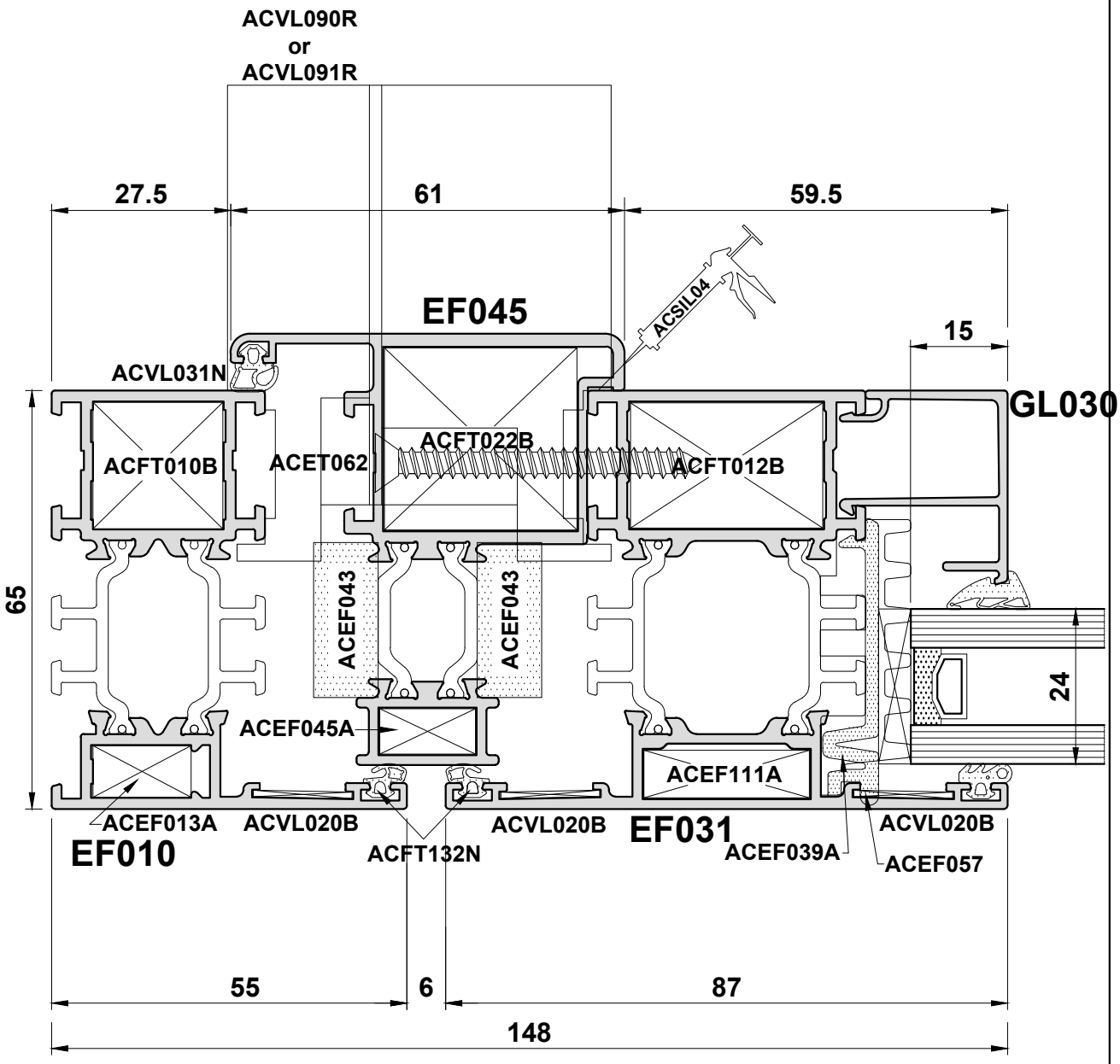

Do Not Scale From This Drawing

Detail 14

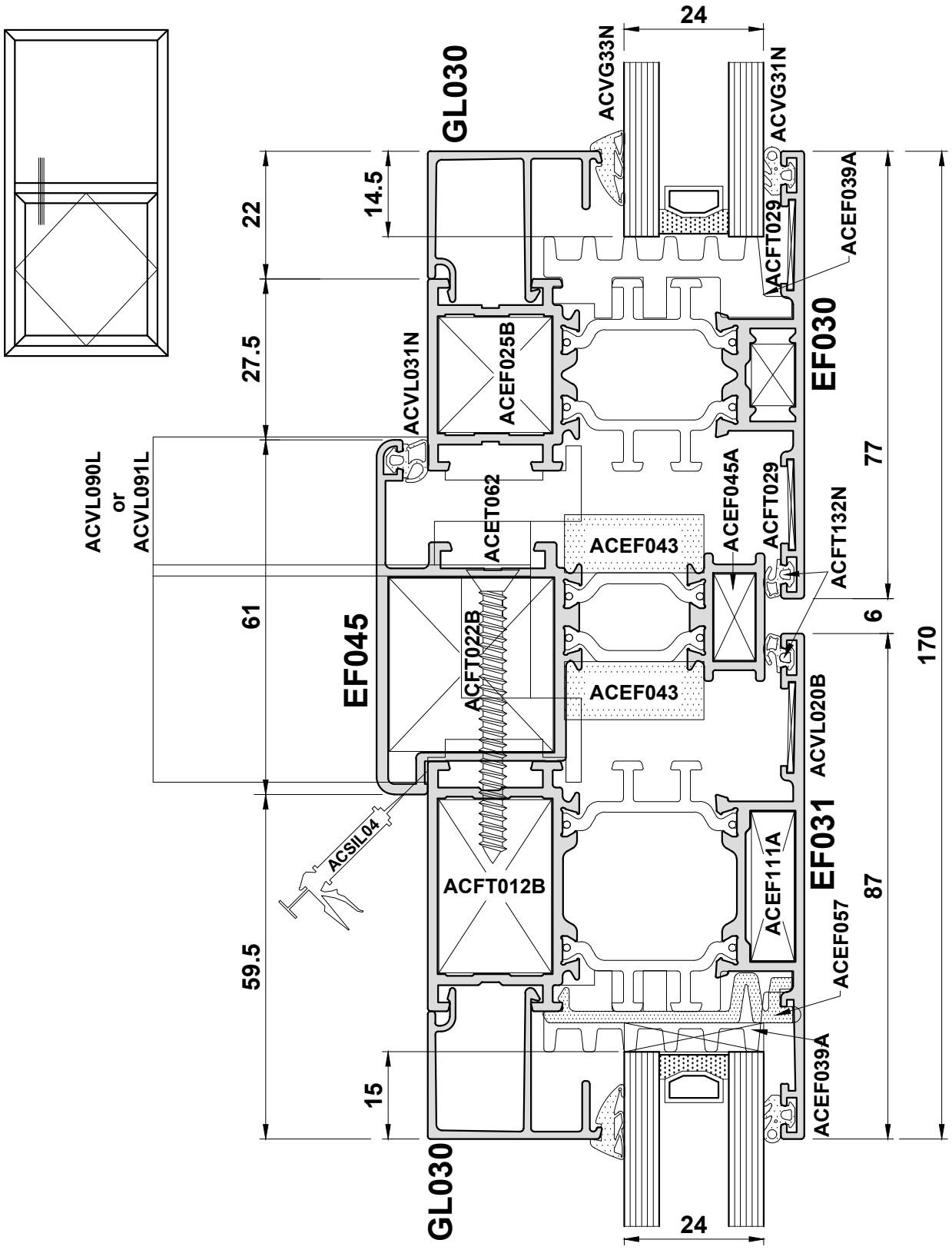

Do Not Scale From This Drawing

Windows - Casement

Externally Glazed Fixed Light

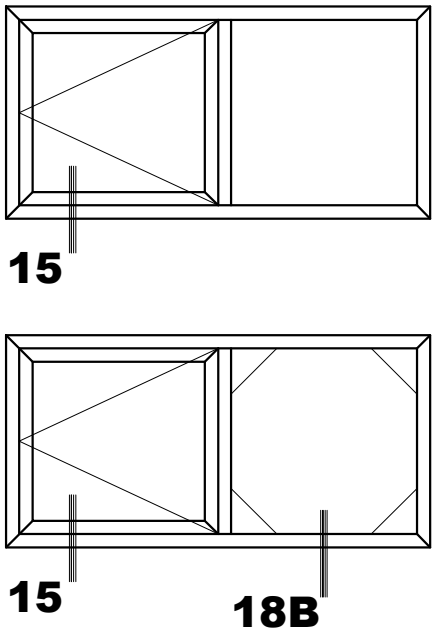

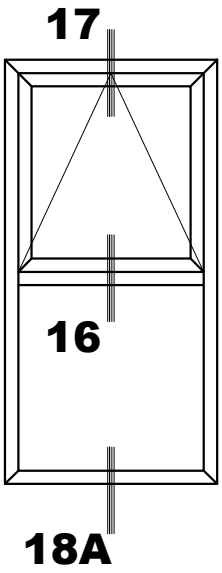

Internally Glazed Fixed Light

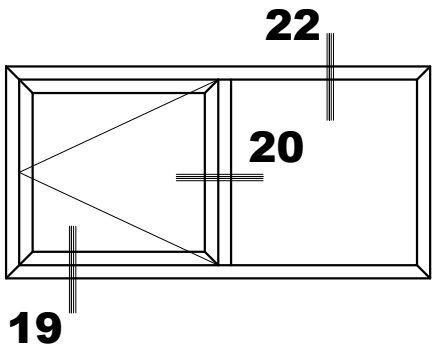

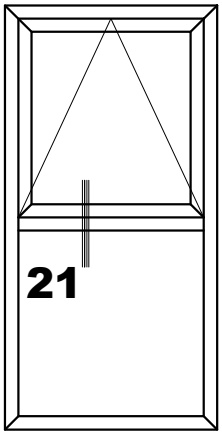

Do Not Scale From This Drawing

Detail 15

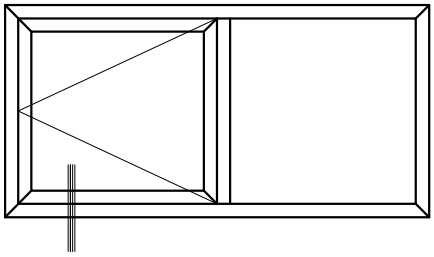

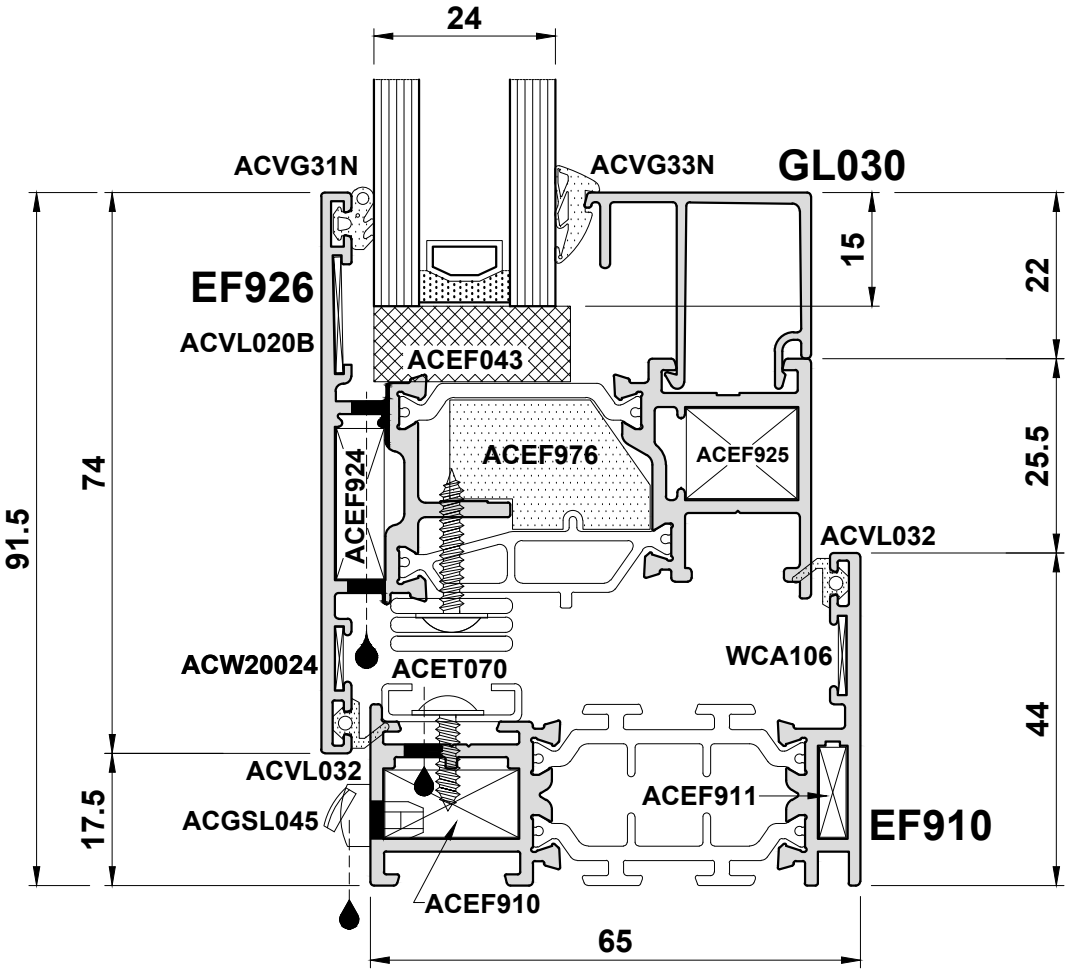

Do Not Scale From This Drawing

Detail 16

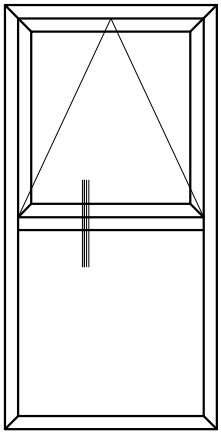

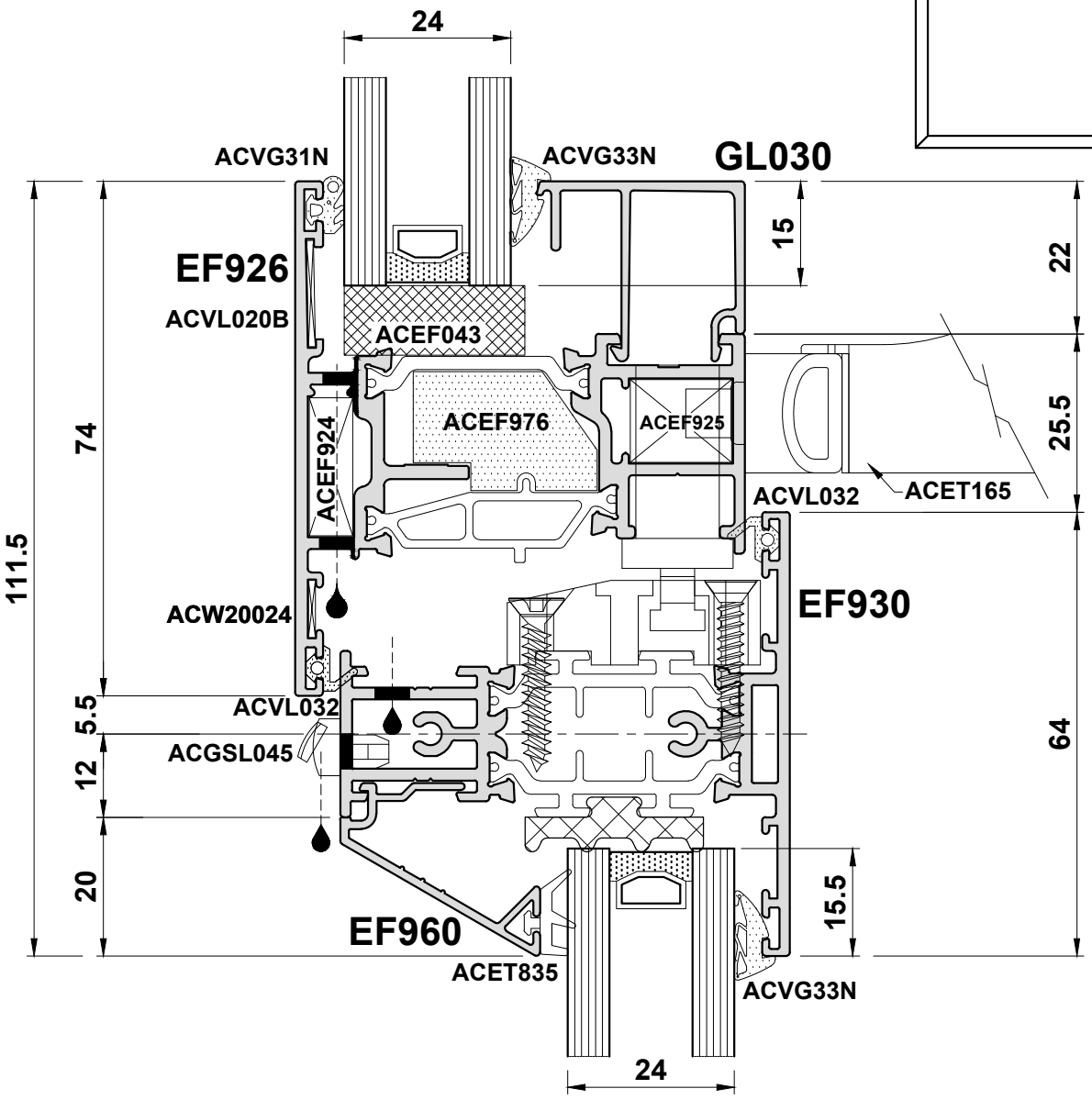

Do Not Scale From This Drawing

Detail 17

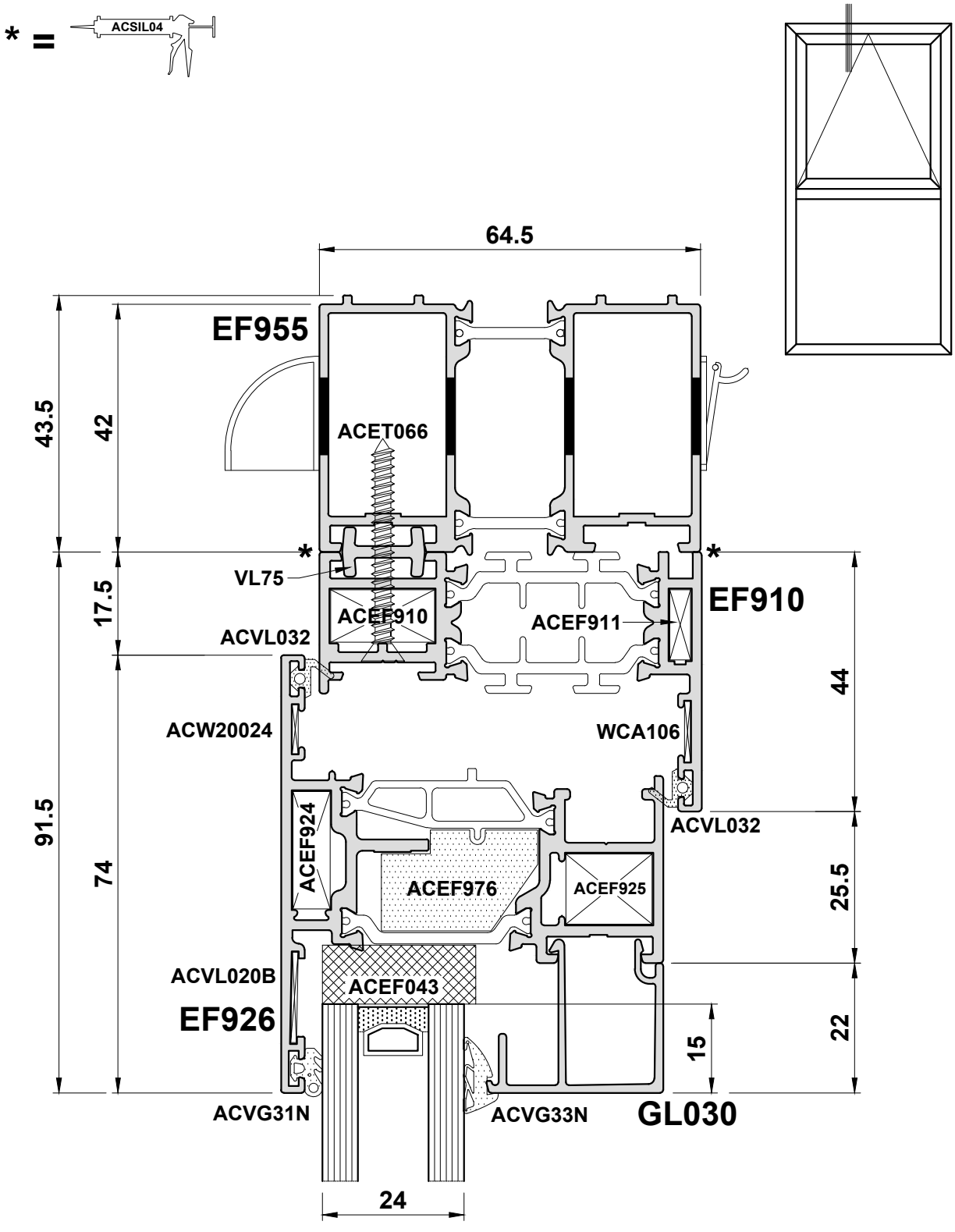

Do Not Scale From This Drawing

Detail 18A

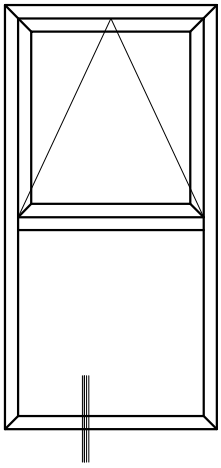

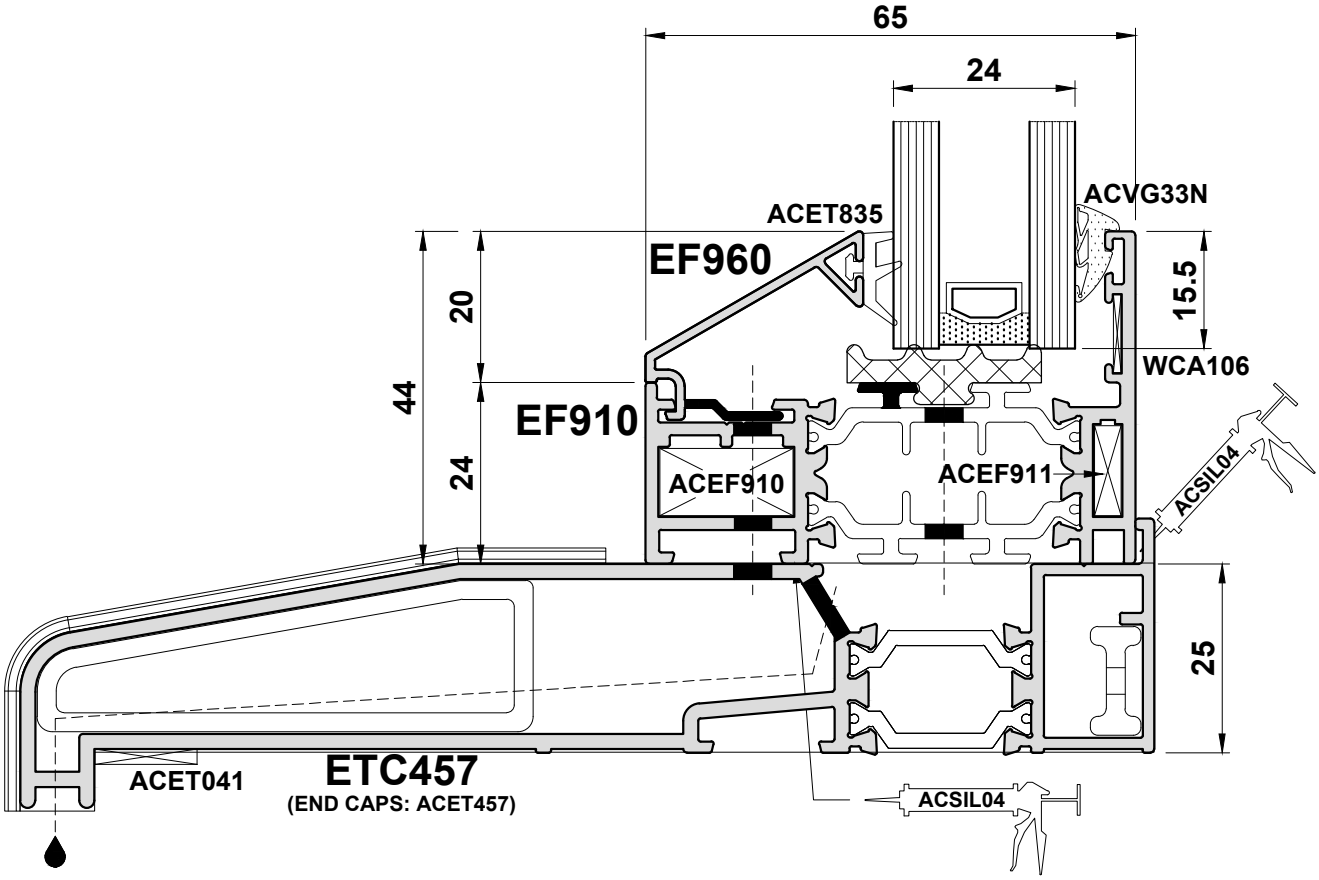

Do Not Scale From This Drawing

Detail 18B

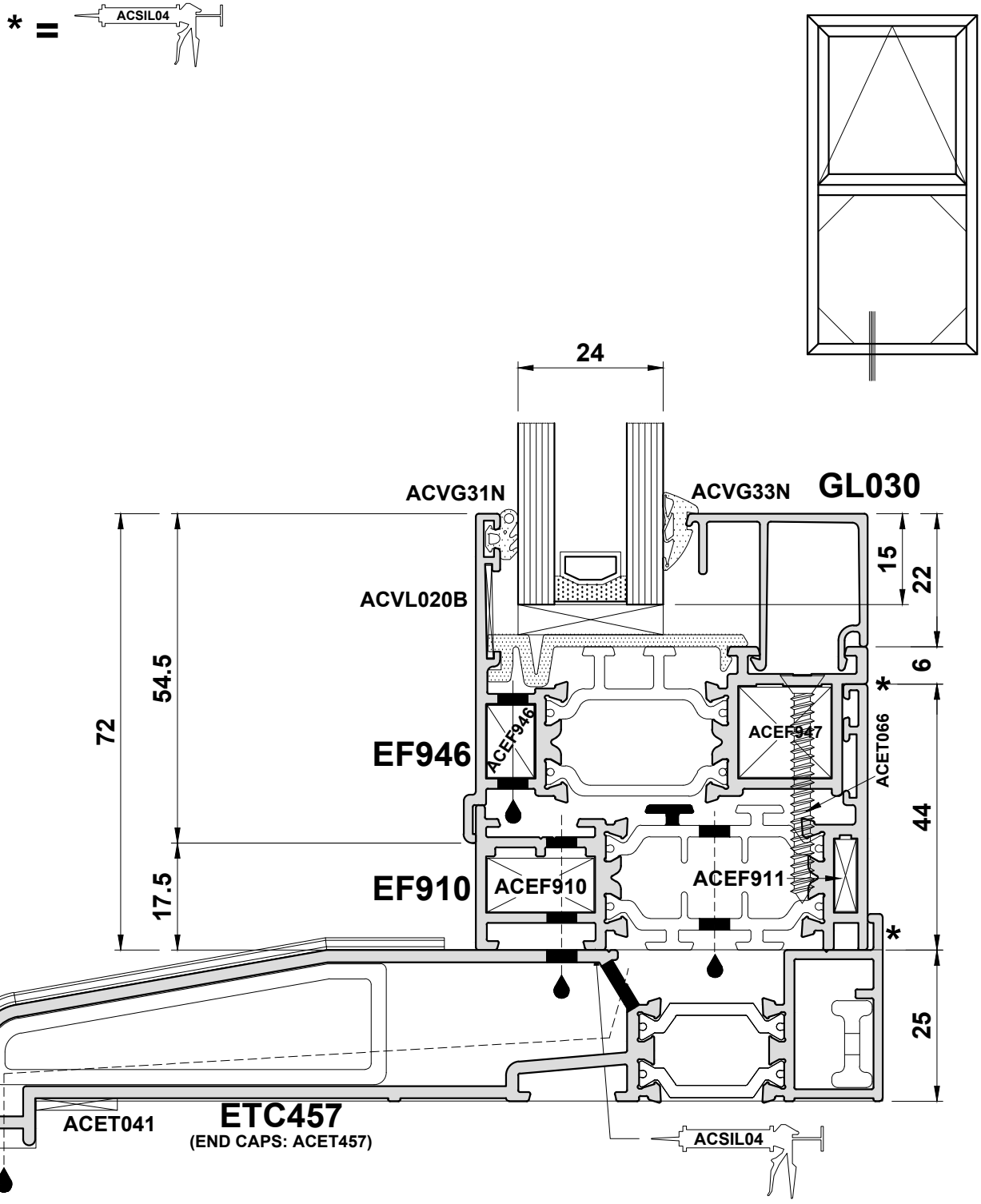

Do Not Scale From This Drawing

Detail 19

* = 

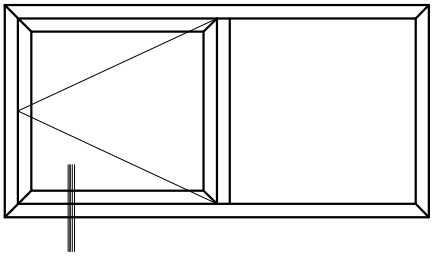

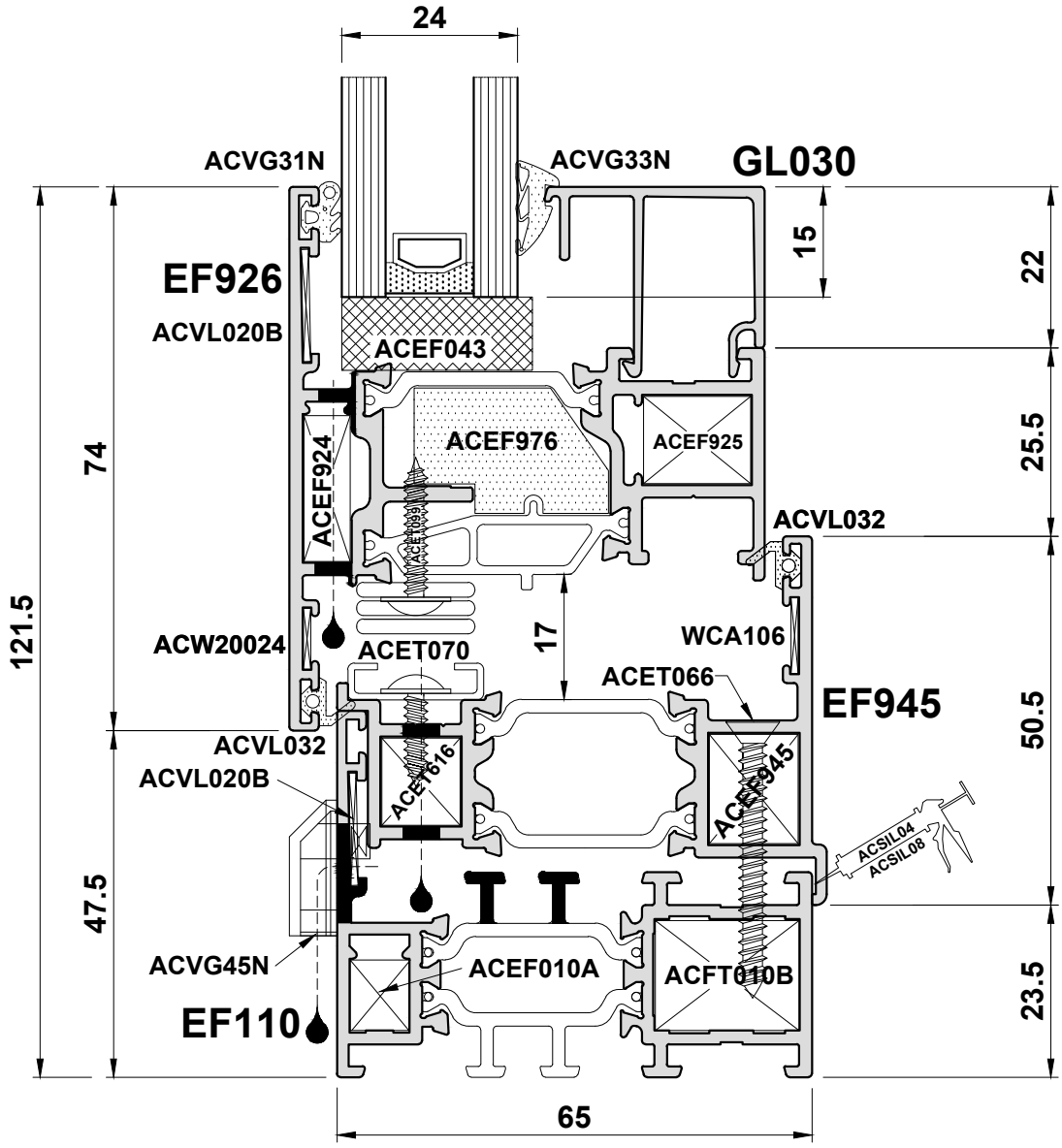

Do Not Scale From This Drawing

Detail 20

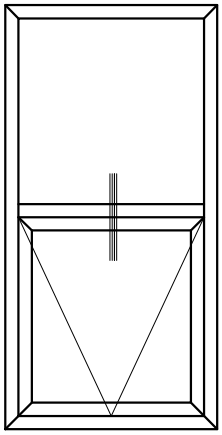

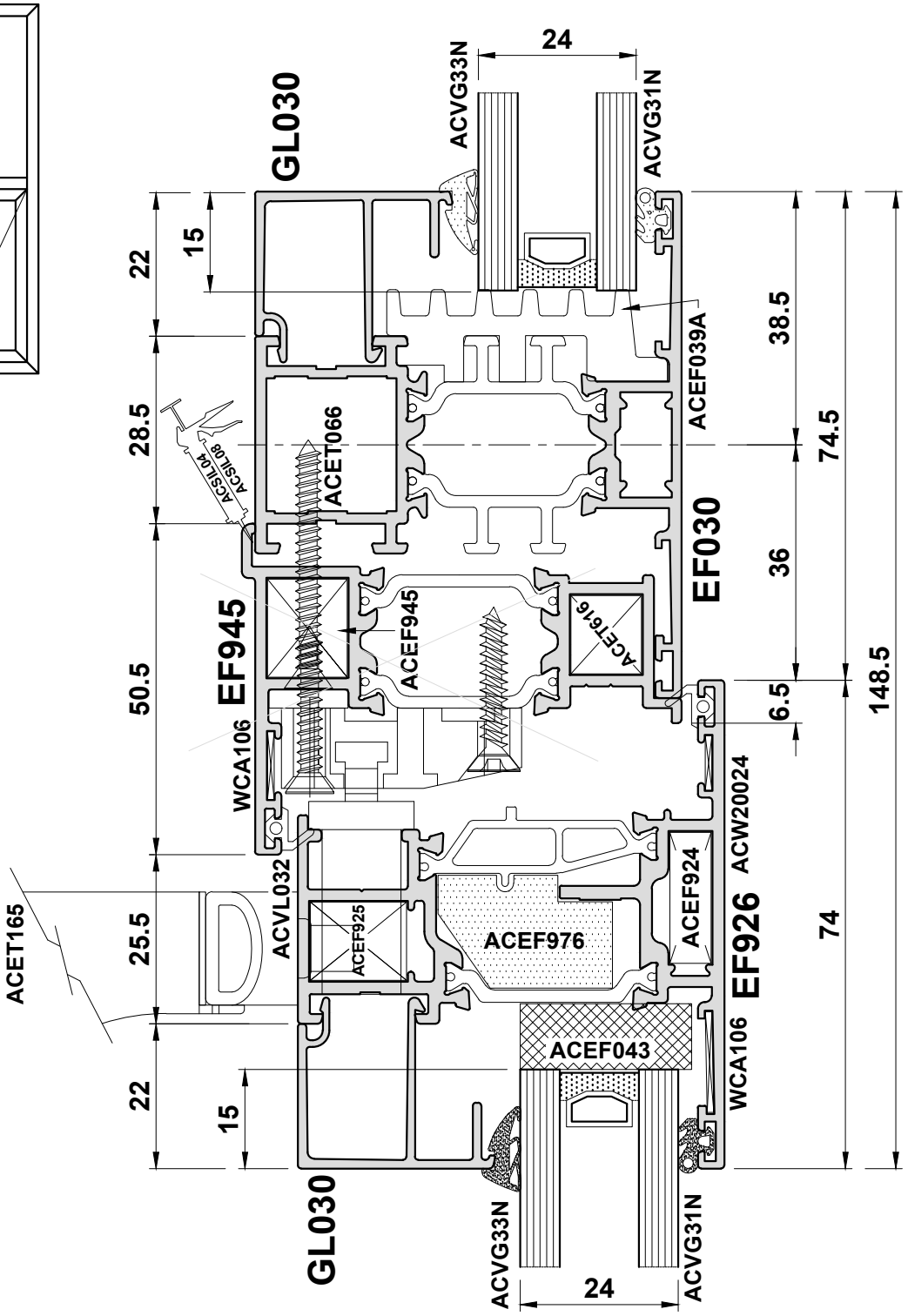

Do Not Scale From This Drawing

Detail 21

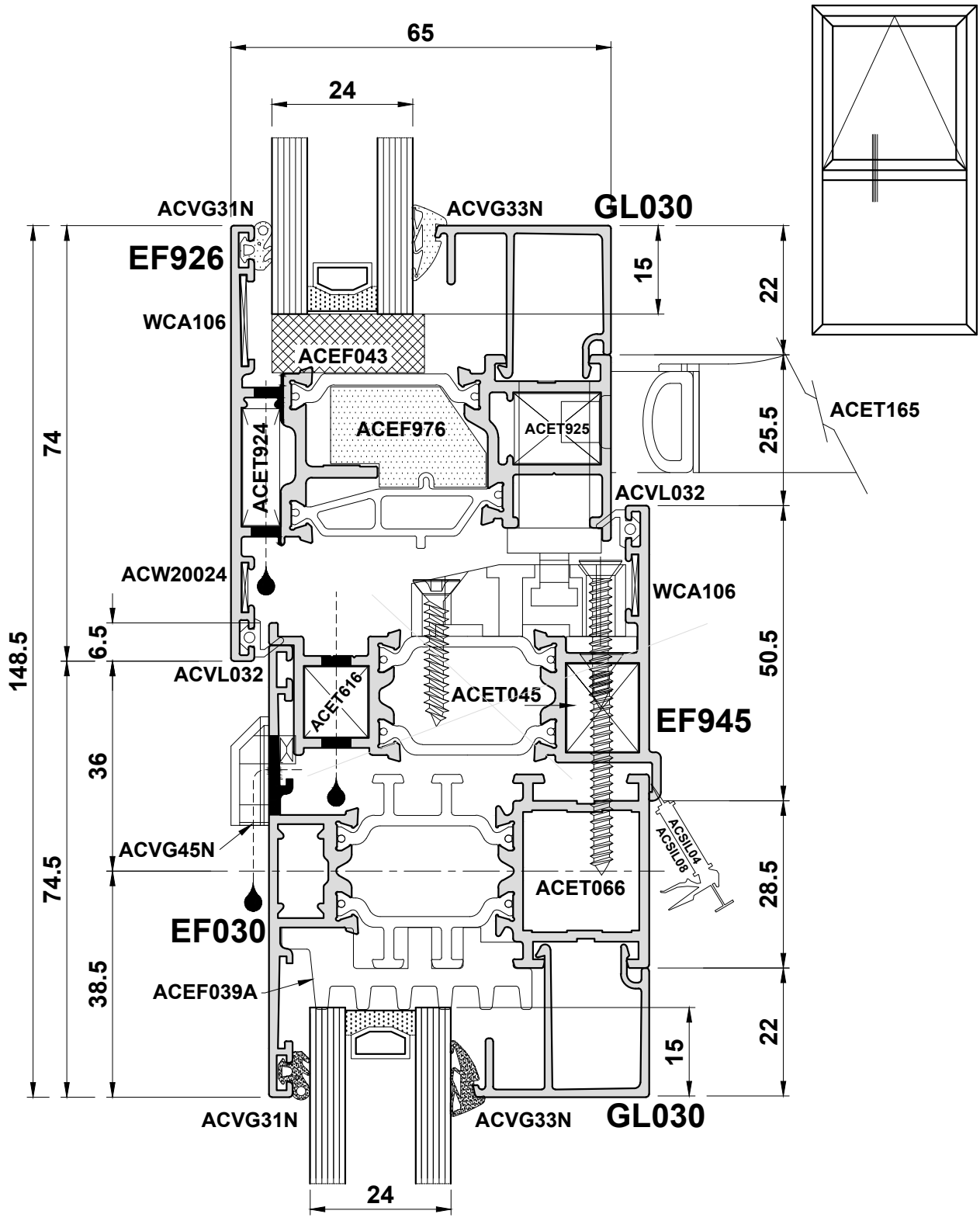

Do Not Scale From This Drawing

Detail 22

* = 

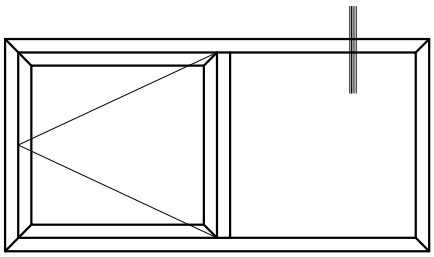

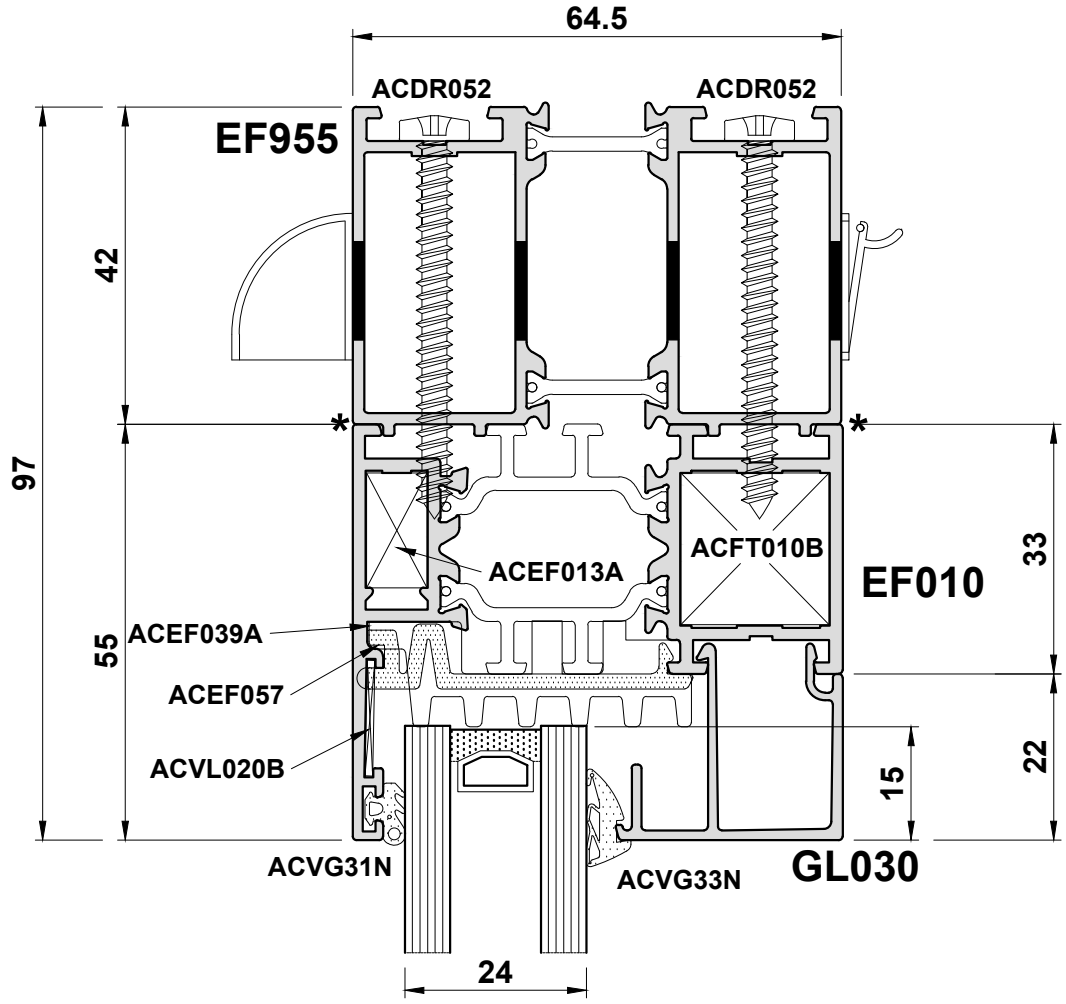

Do Not Scale From This Drawing

Detail 23

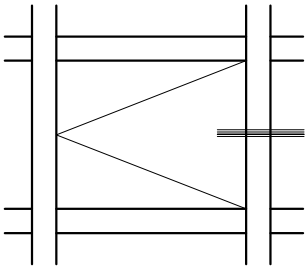

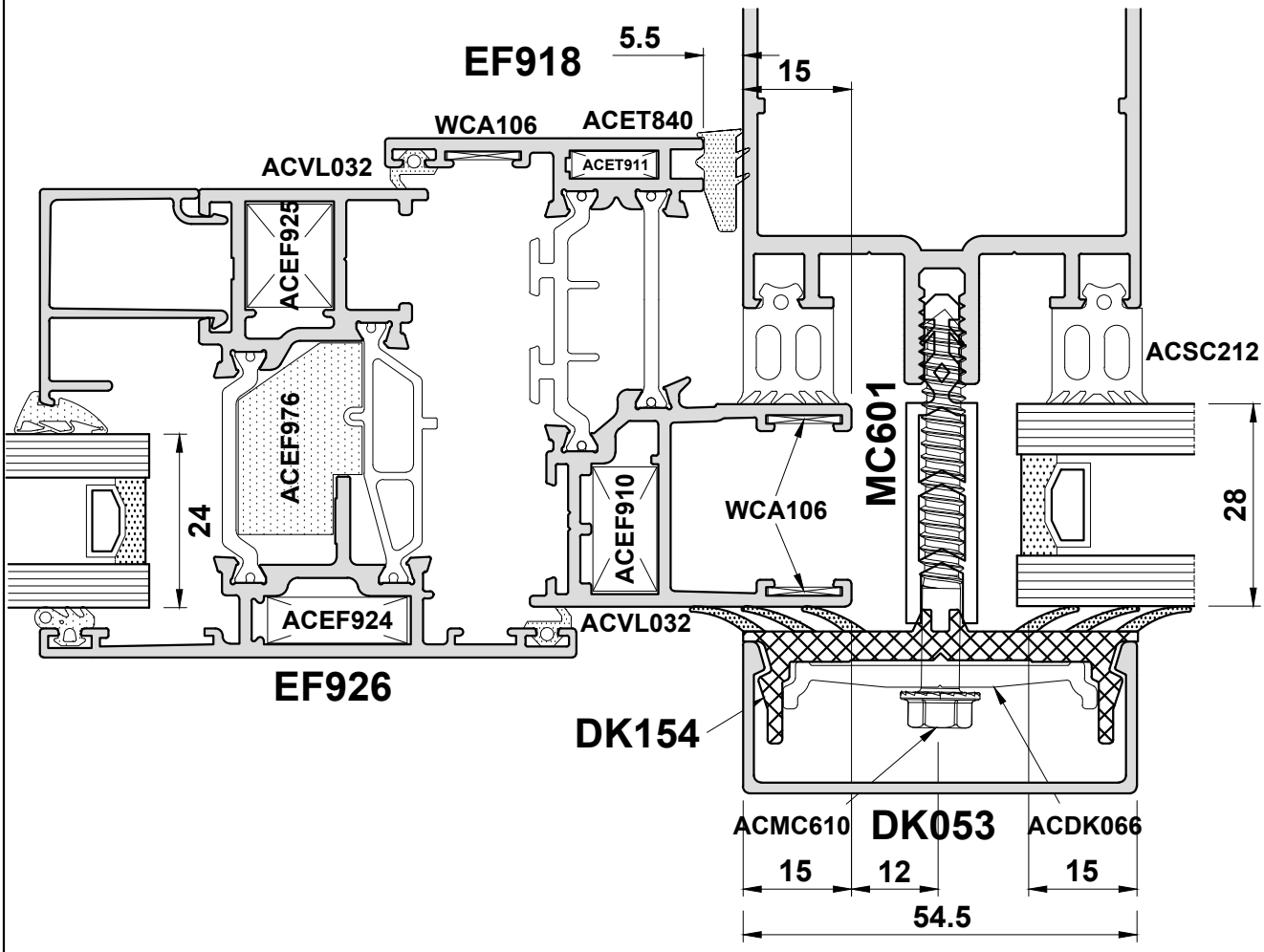

Do Not Scale From This Drawing

This page is intentionally left blank

Do Not Scale From This Drawing

Open Out Doors - Scale Elevations

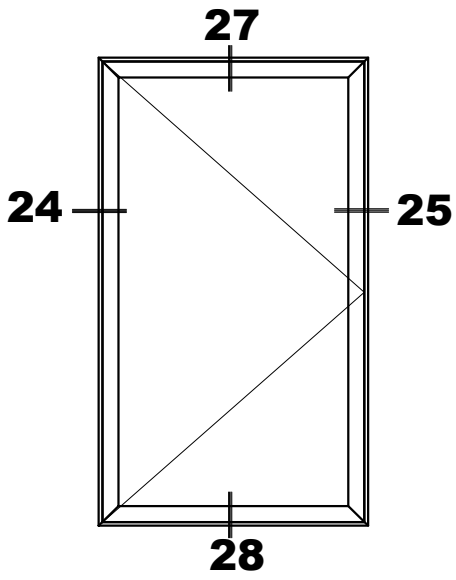

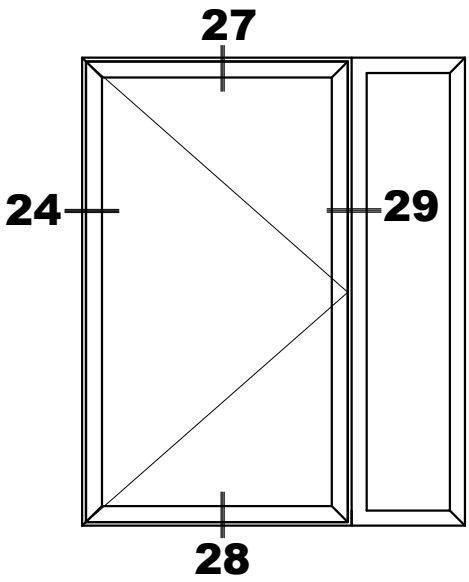

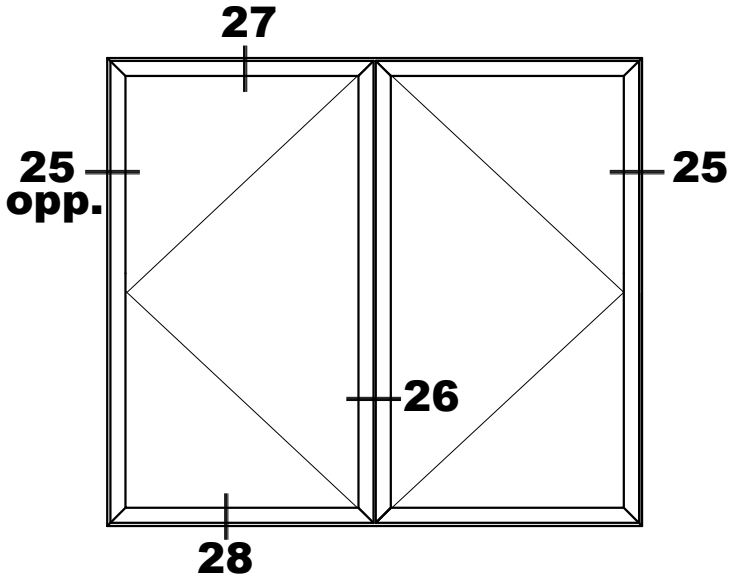

Do Not Scale From This Drawing

Open Out Doors - Detail 24

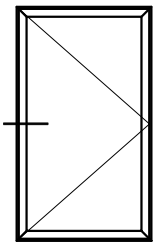

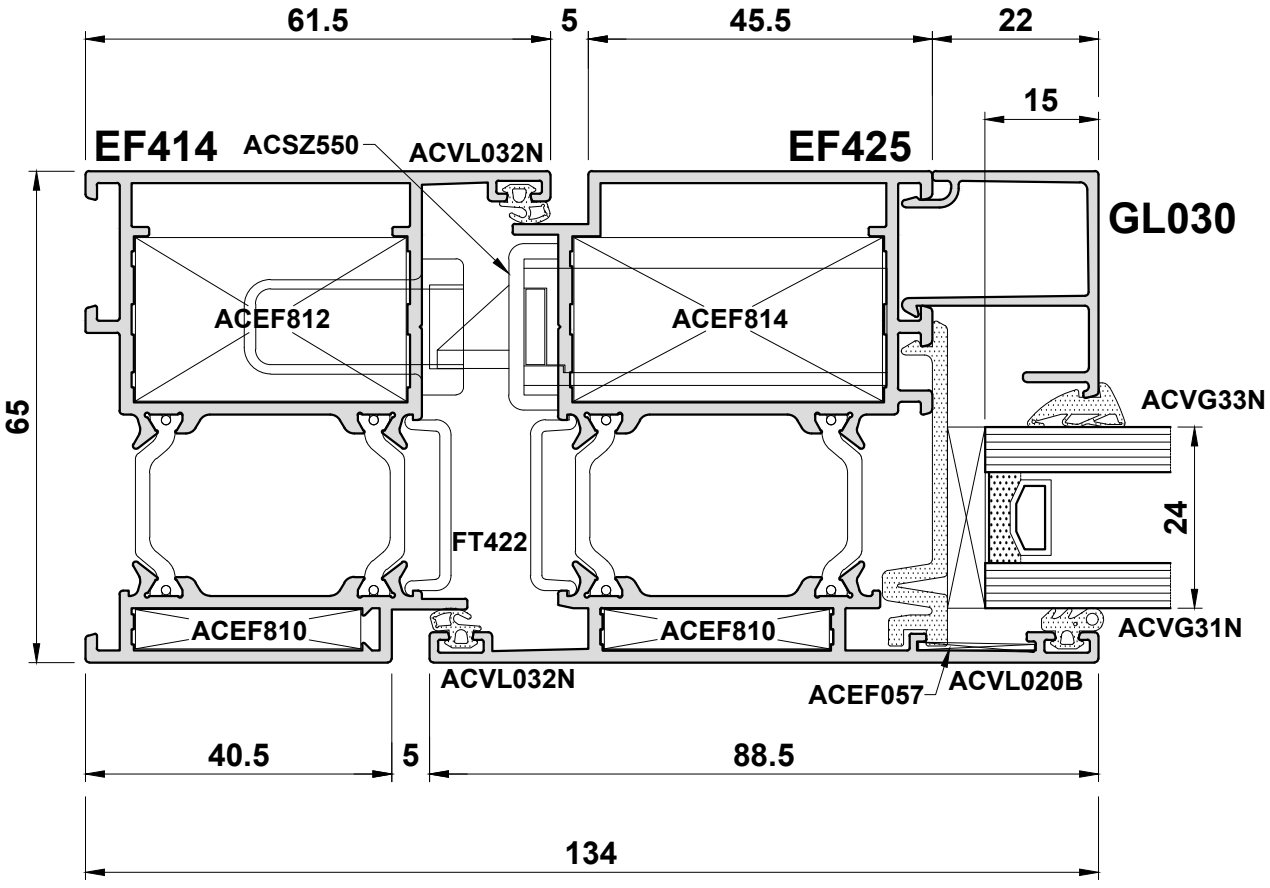

Do Not Scale From This Drawing

Open Out Doors - Detail 25

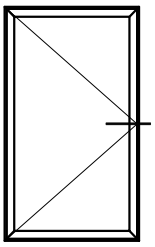

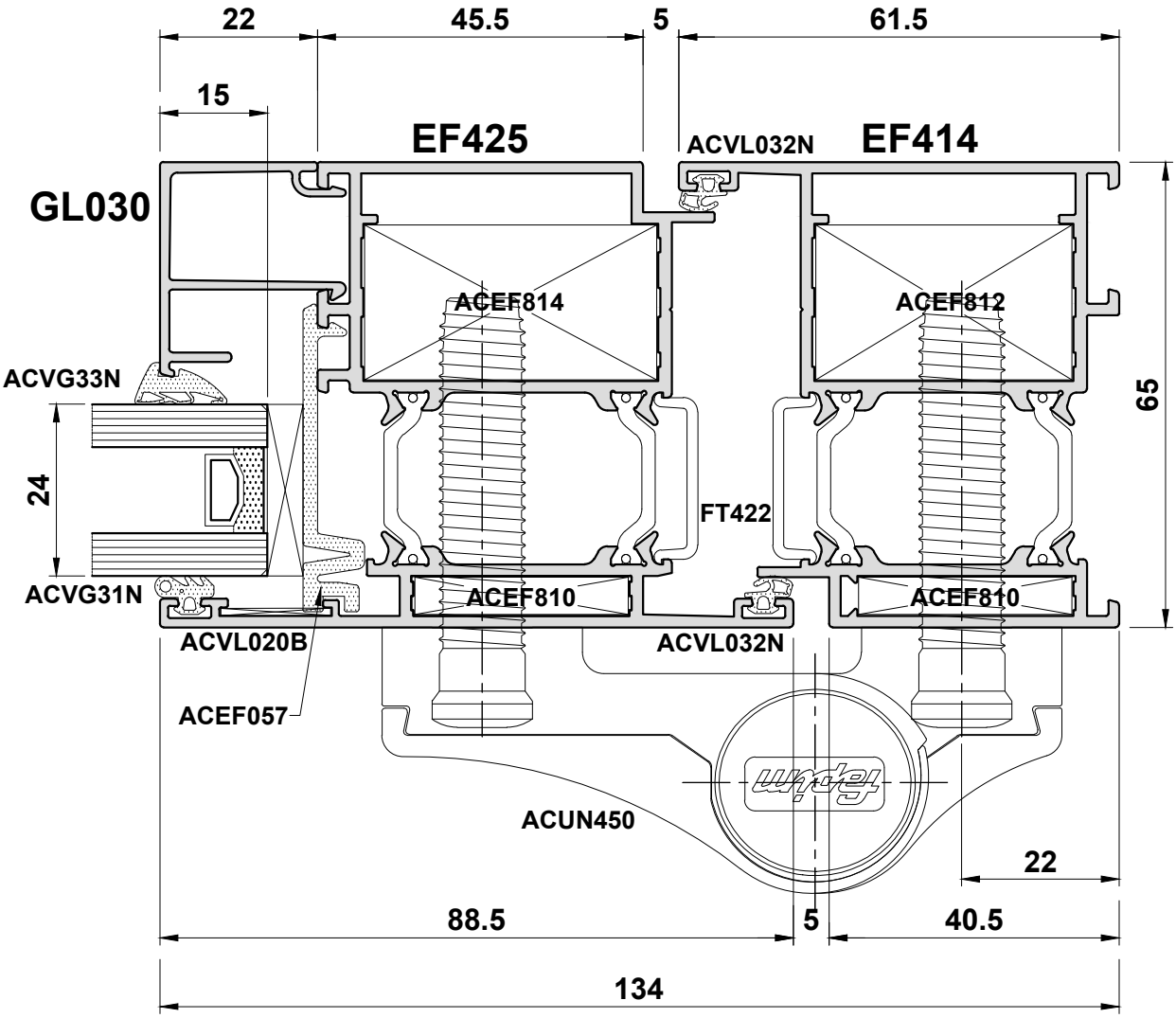

Do Not Scale From This Drawing

Open Out Doors - Detail 26

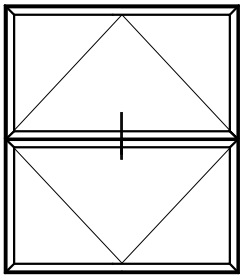

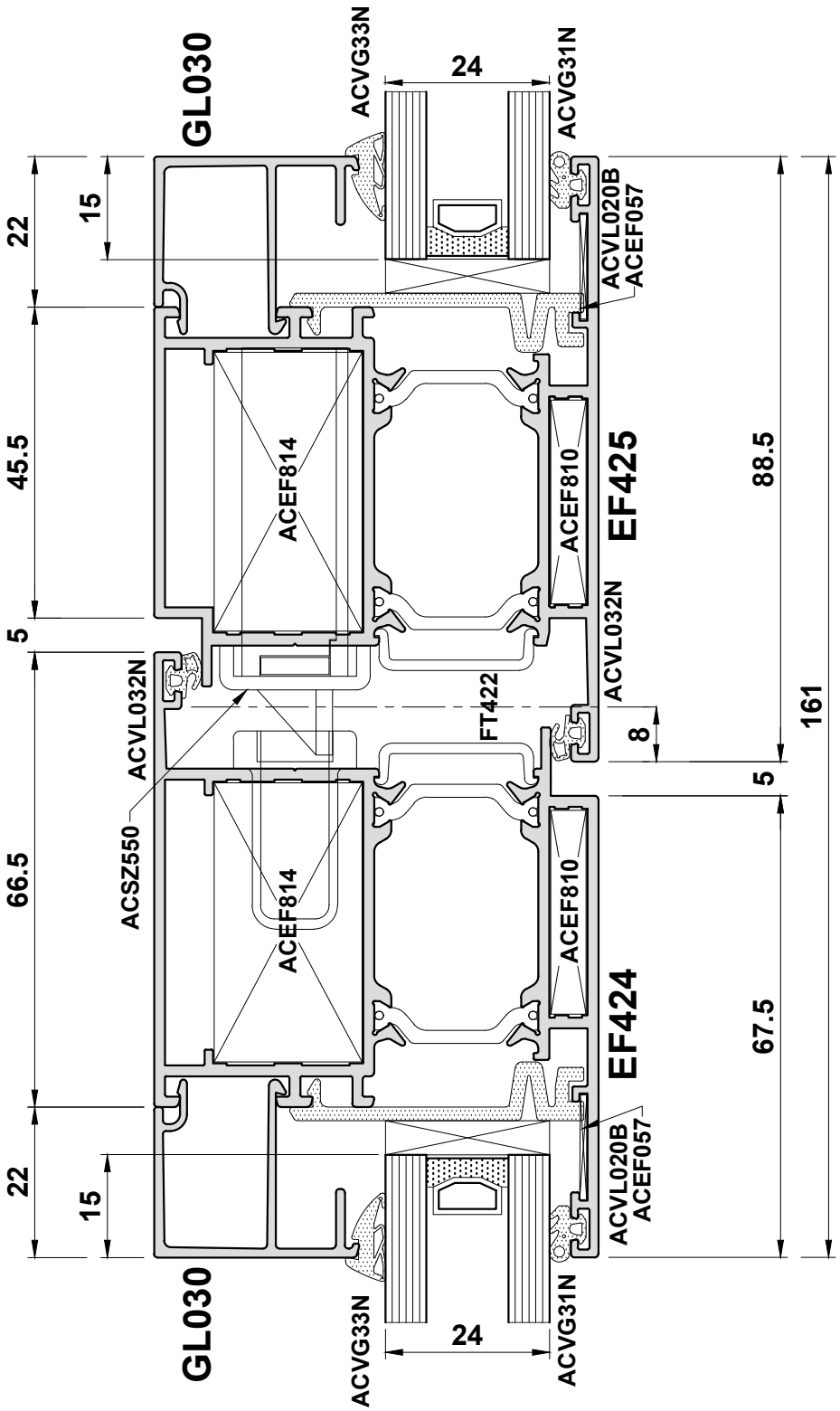

Do Not Scale From This Drawing

Open Out Doors - Detail 27

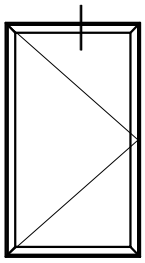

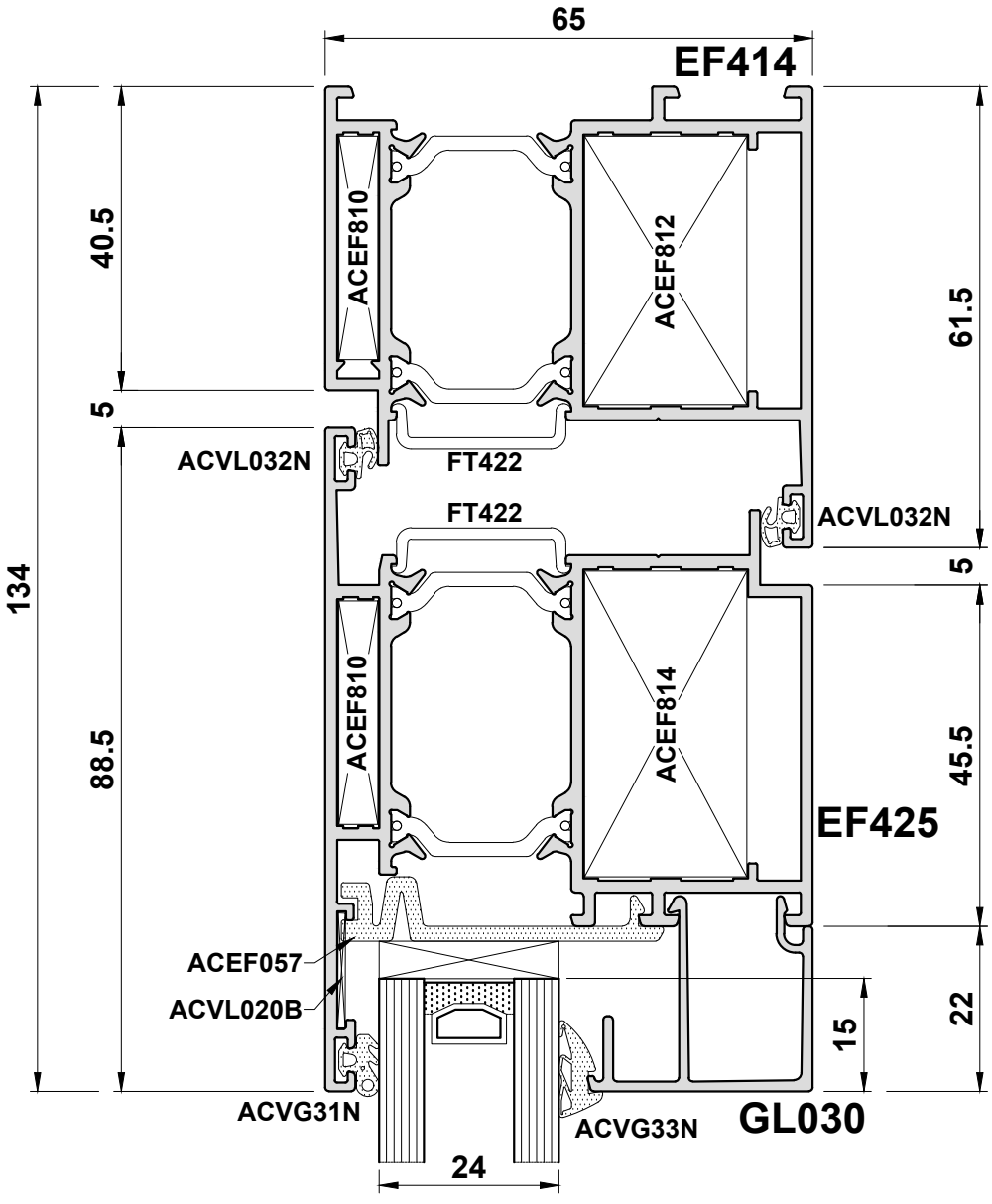

Do Not Scale From This Drawing

Open Out Doors - Detail 28A

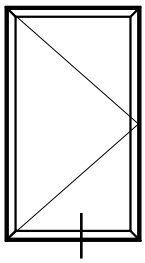

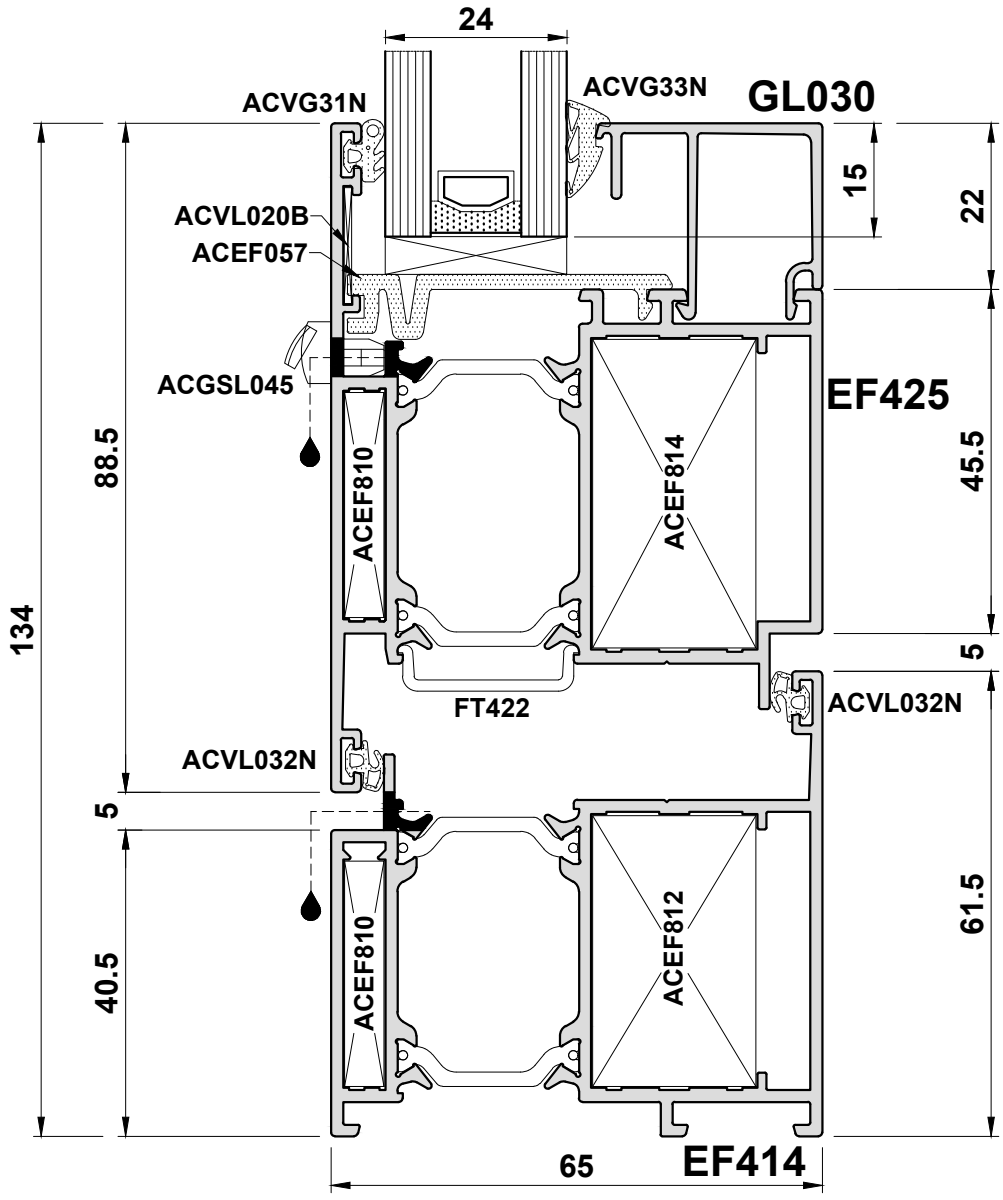

Do Not Scale From This Drawing

Open Out Doors - Detail 28B

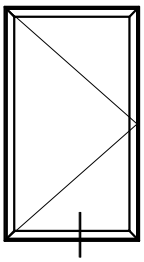

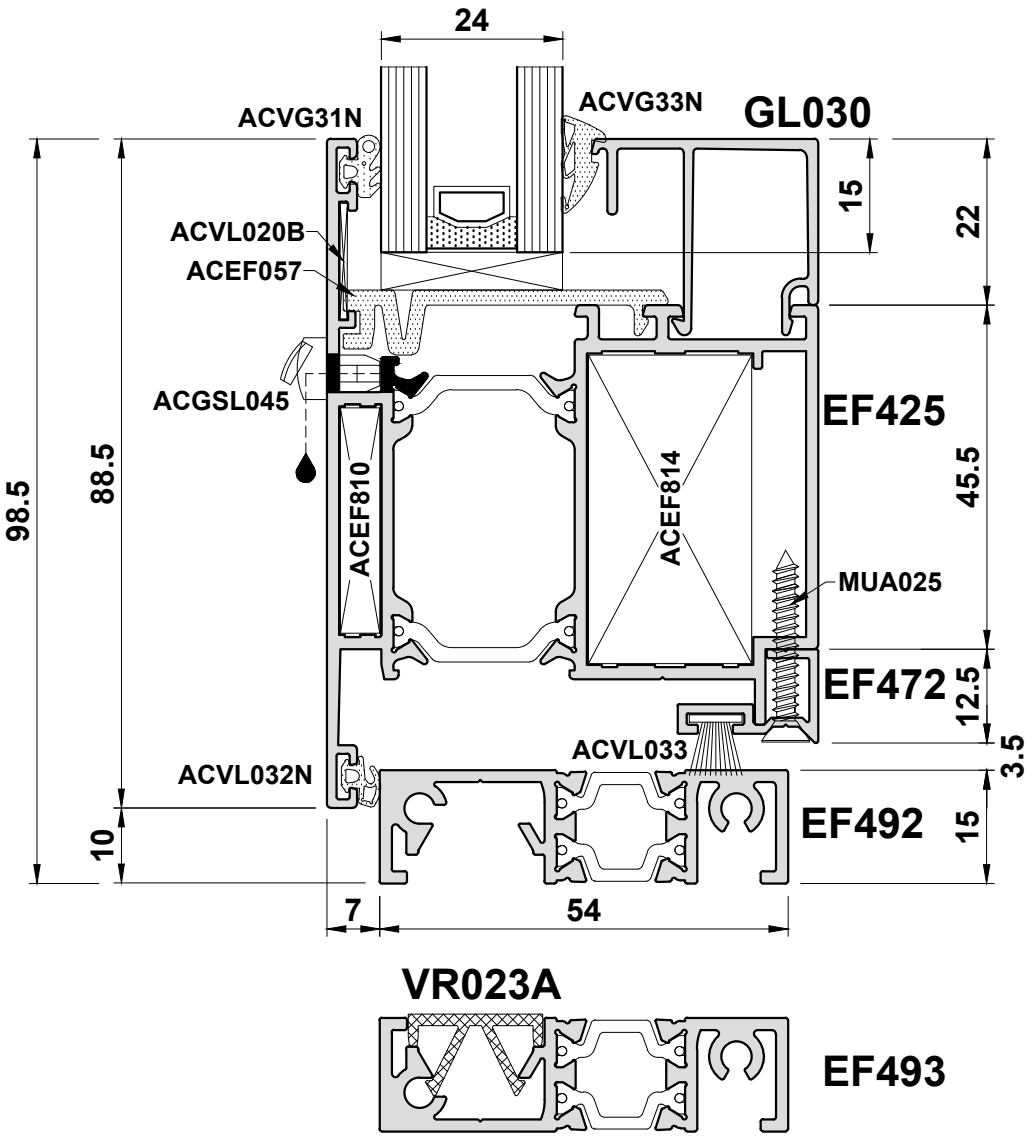

Do Not Scale From This Drawing

Open Out Doors - Detail 28C

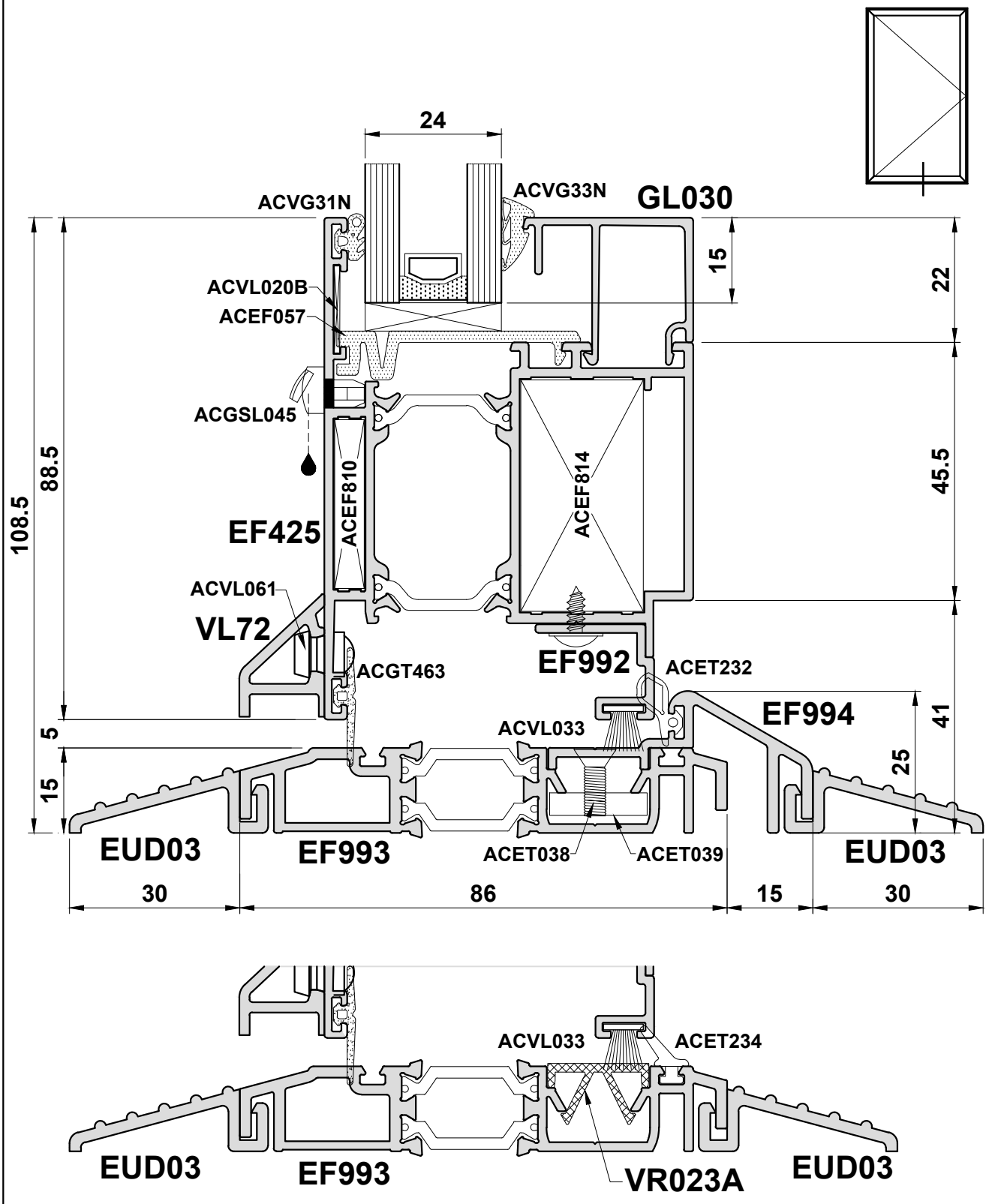

Do Not Scale From This Drawing

Open Out Doors - Detail 29

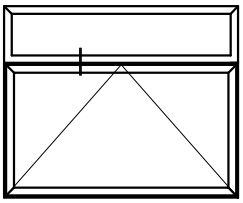

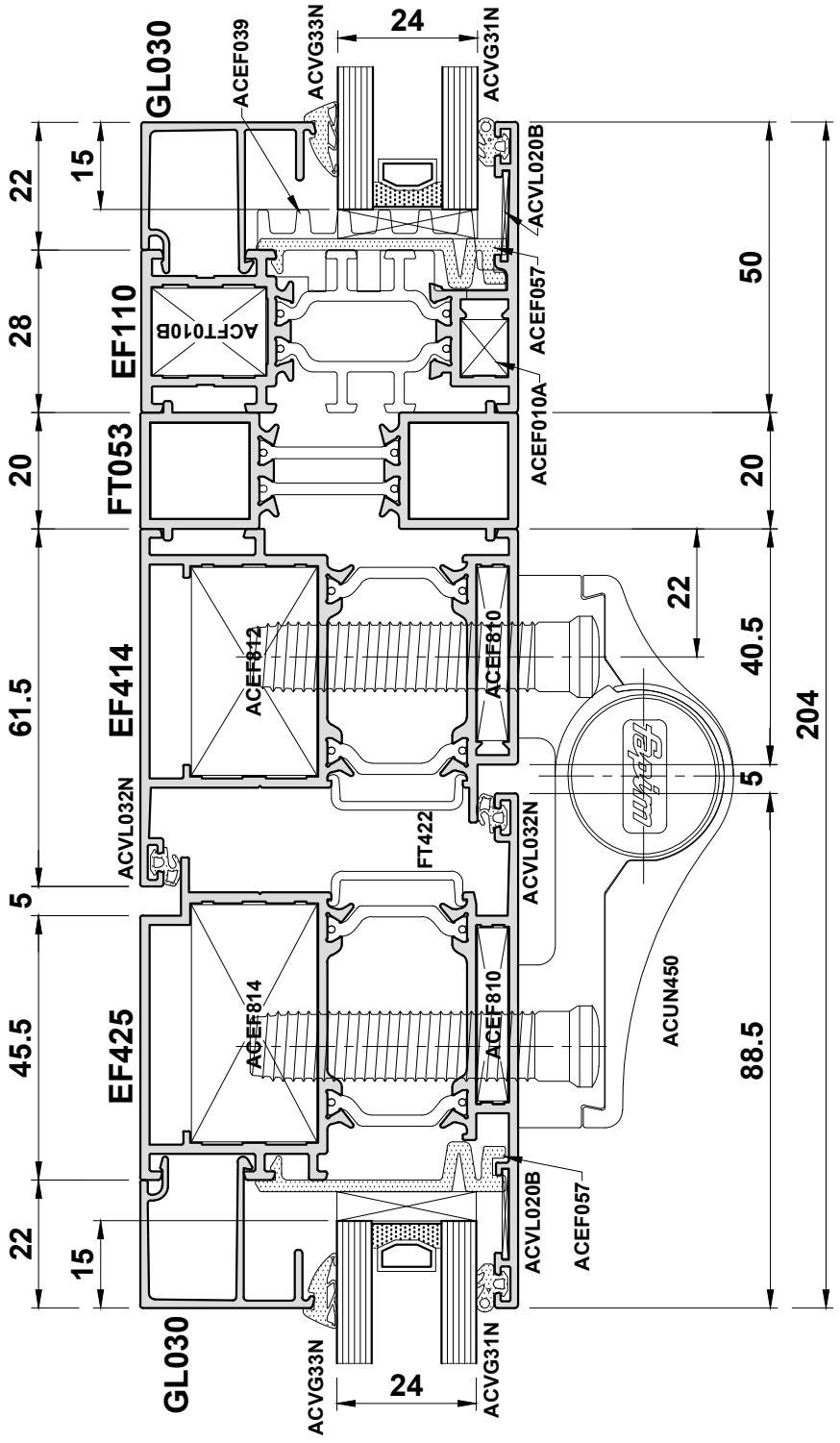

Do Not Scale From This Drawing

Open In Doors - Scale Elevations

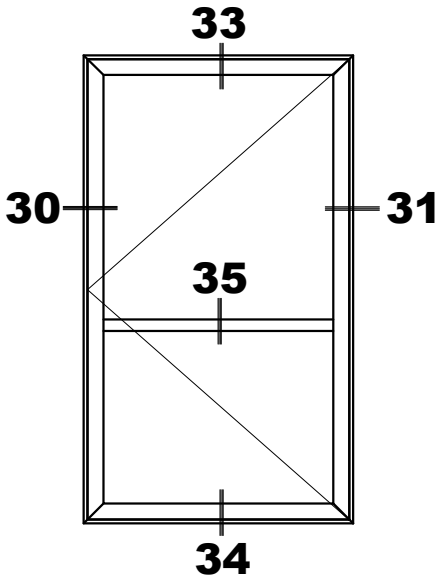

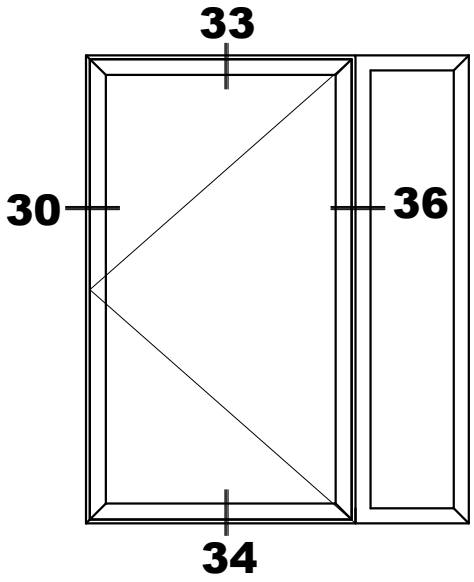

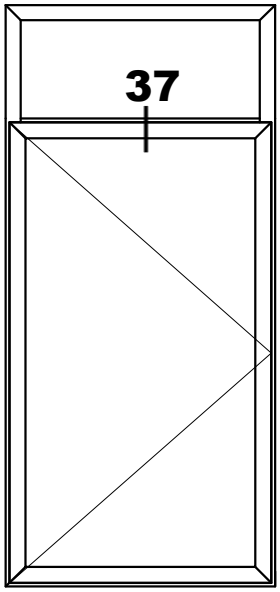

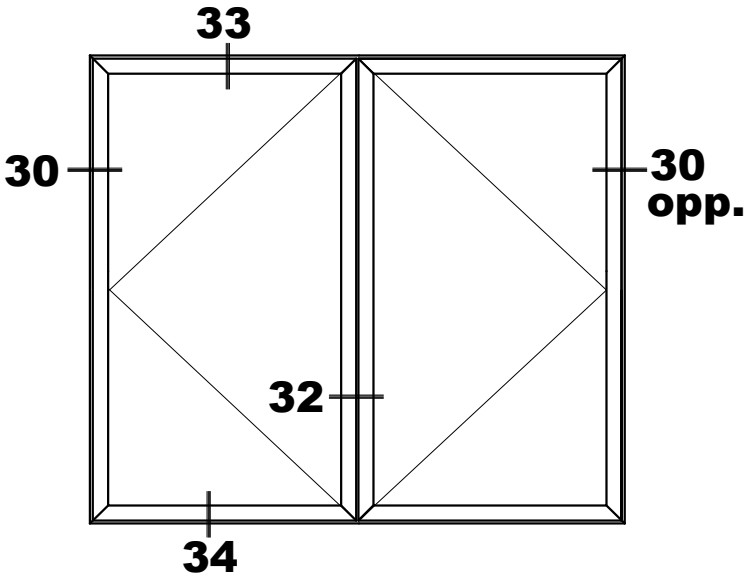

Do Not Scale From This Drawing

Open In Doors - Detail 30

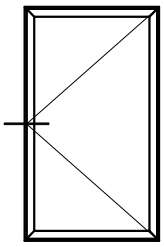

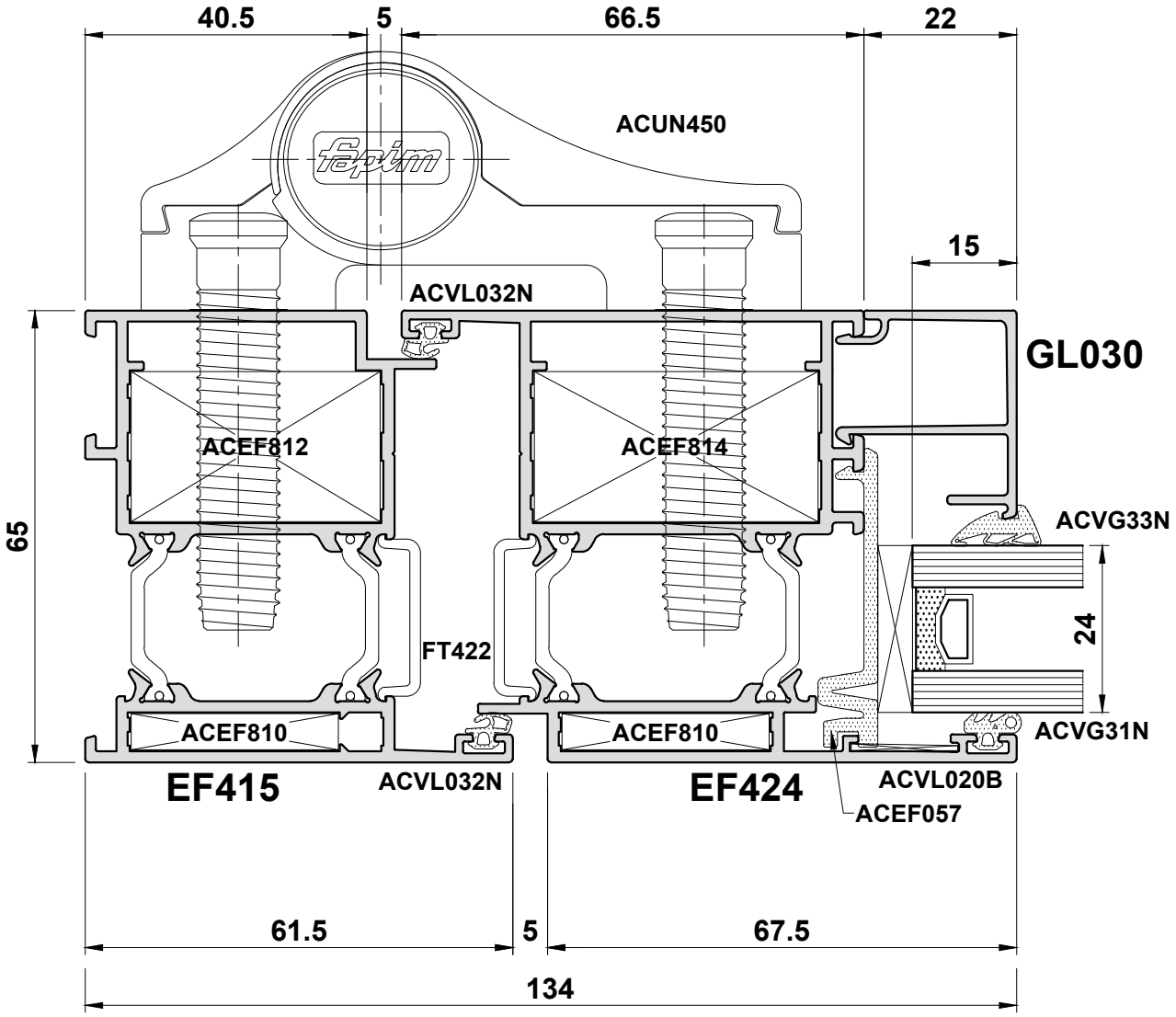

Do Not Scale From This Drawing

Open In Doors - Detail 31

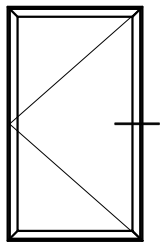

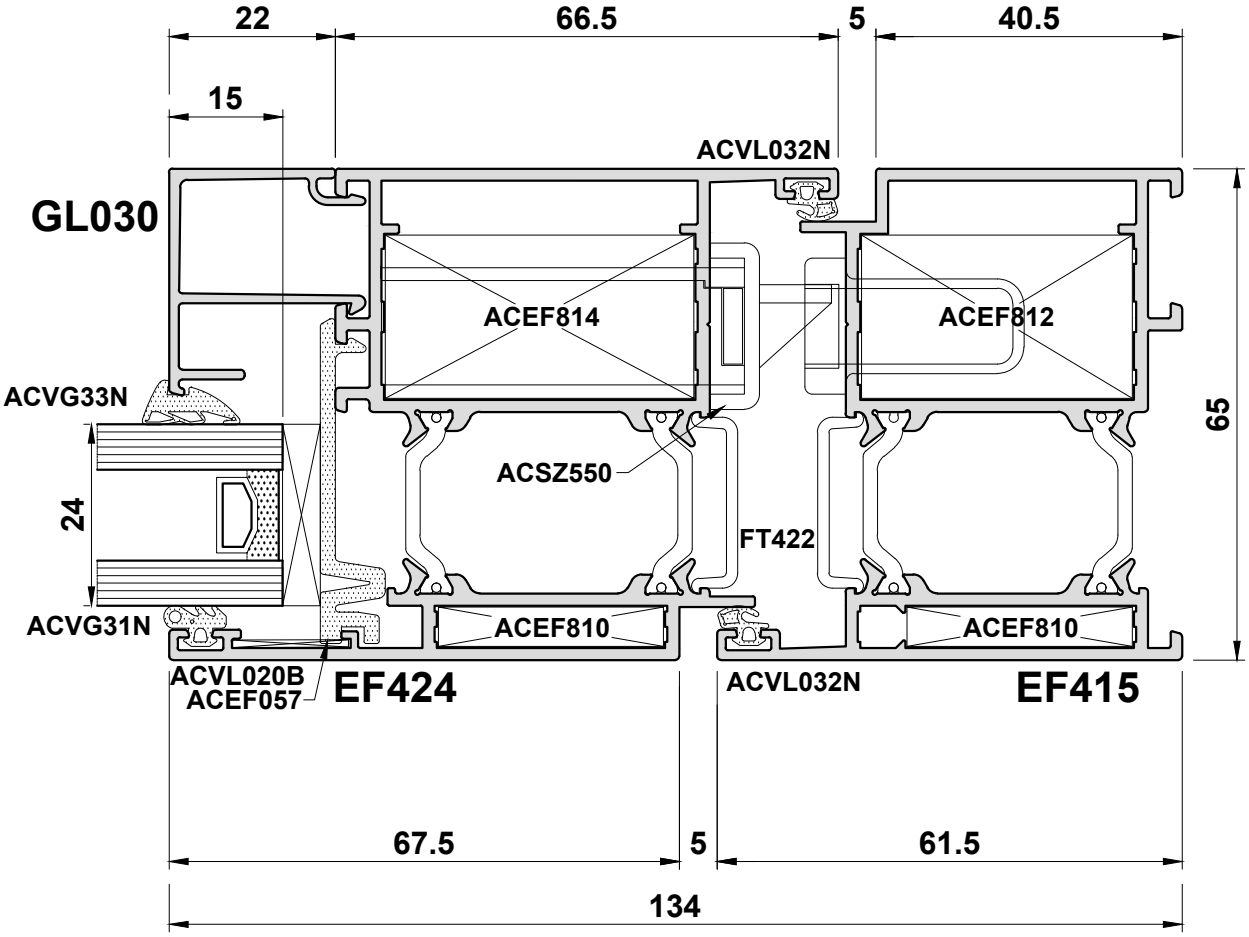

Do Not Scale From This Drawing

Open In Doors - Detail 32

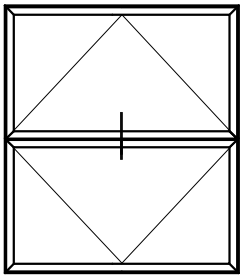

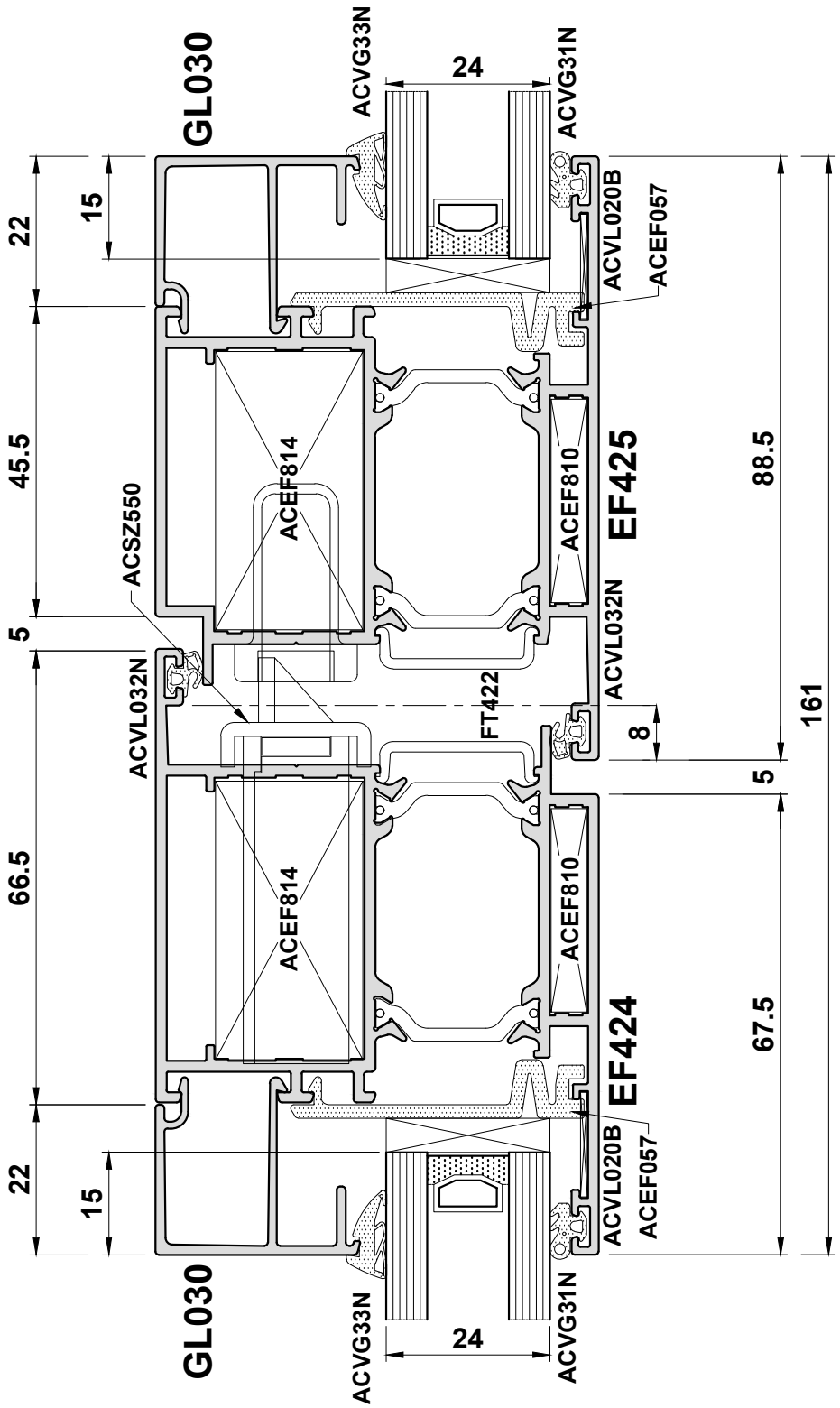

Do Not Scale From This Drawing

Open In Doors - Detail 33

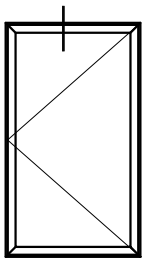

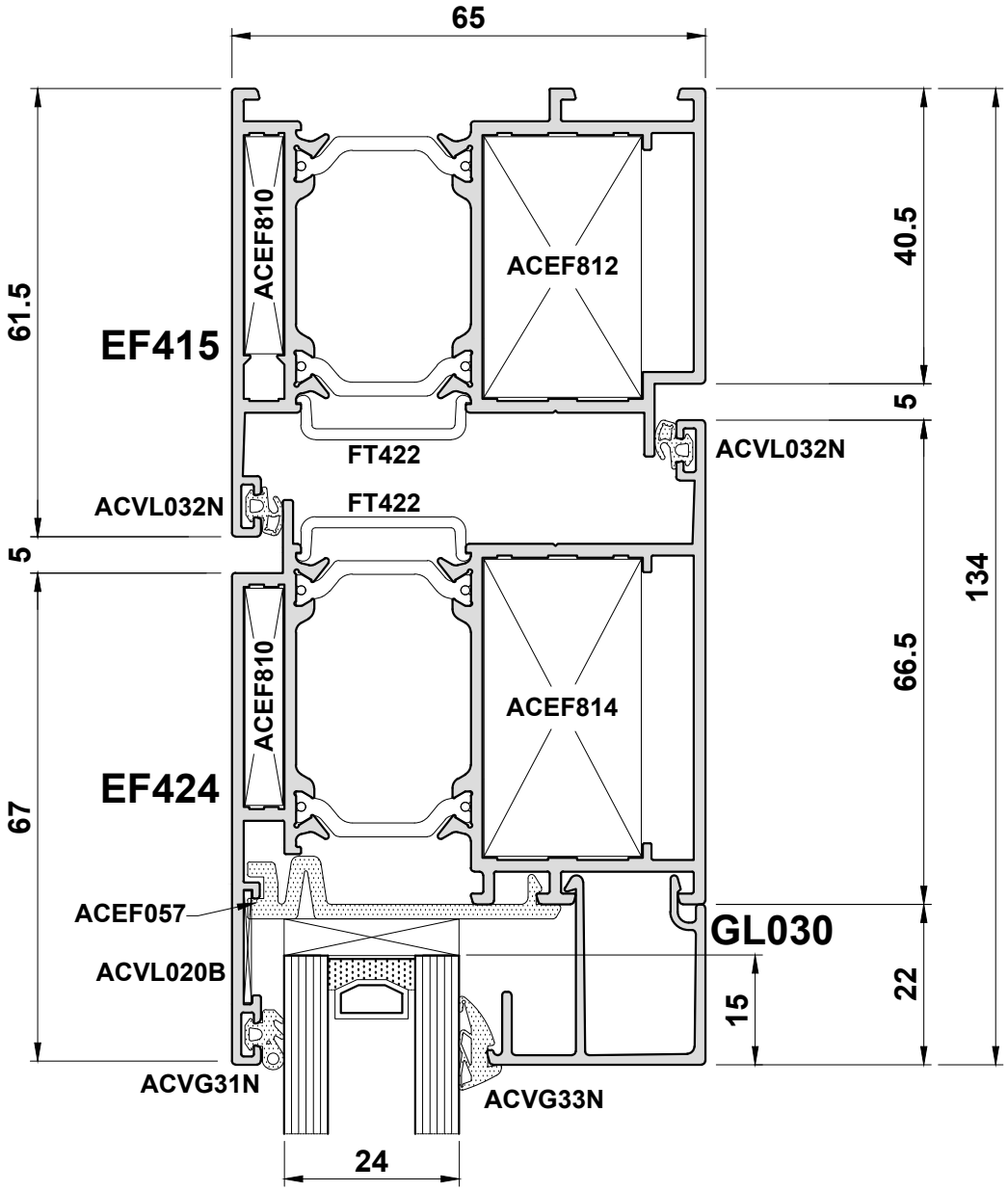

Do Not Scale From This Drawing

Open In Doors - Detail 34A

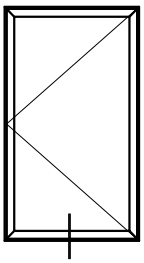

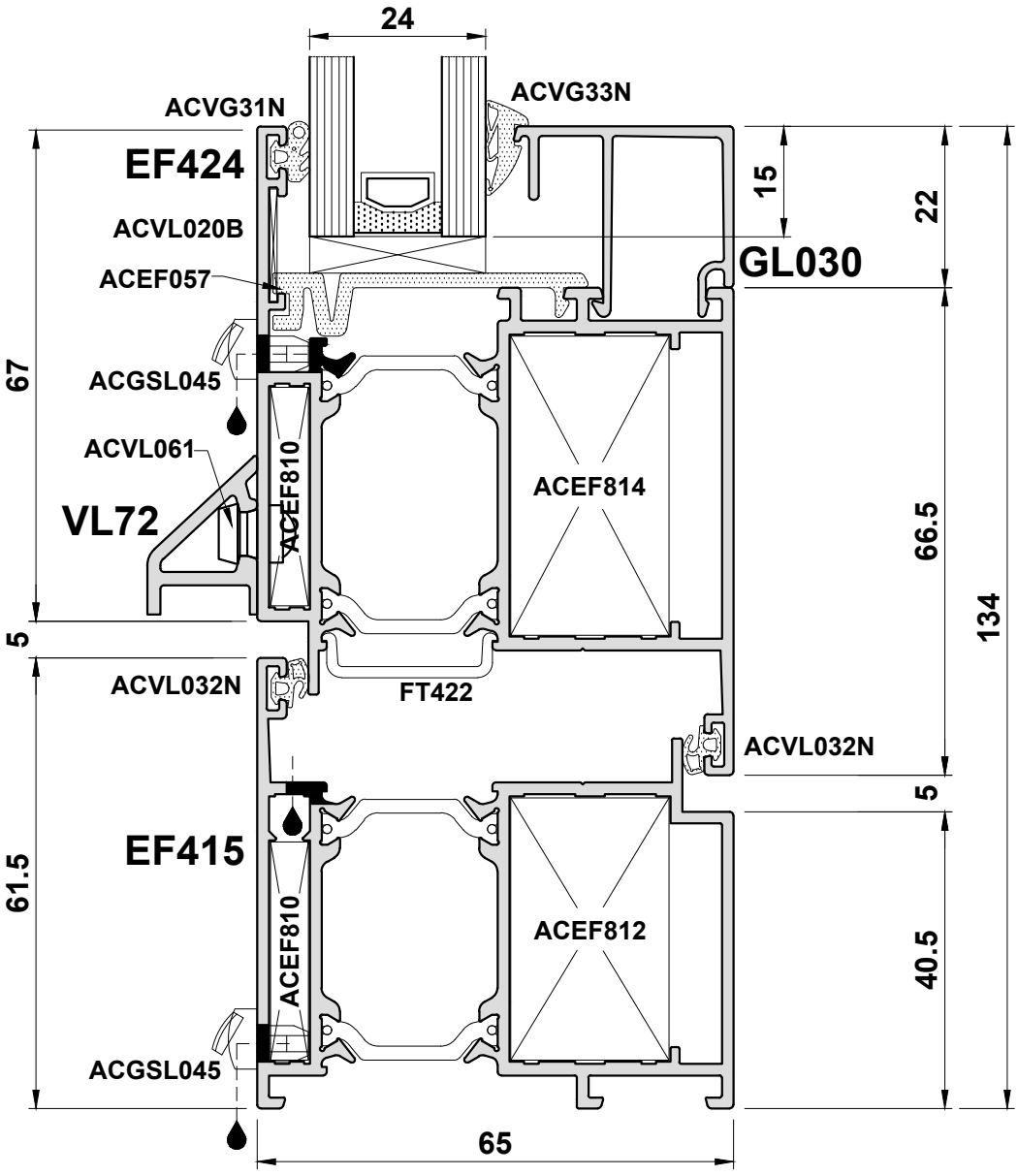

Do Not Scale From This Drawing

Open In Doors - Detail 34B

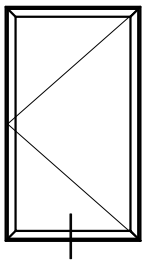

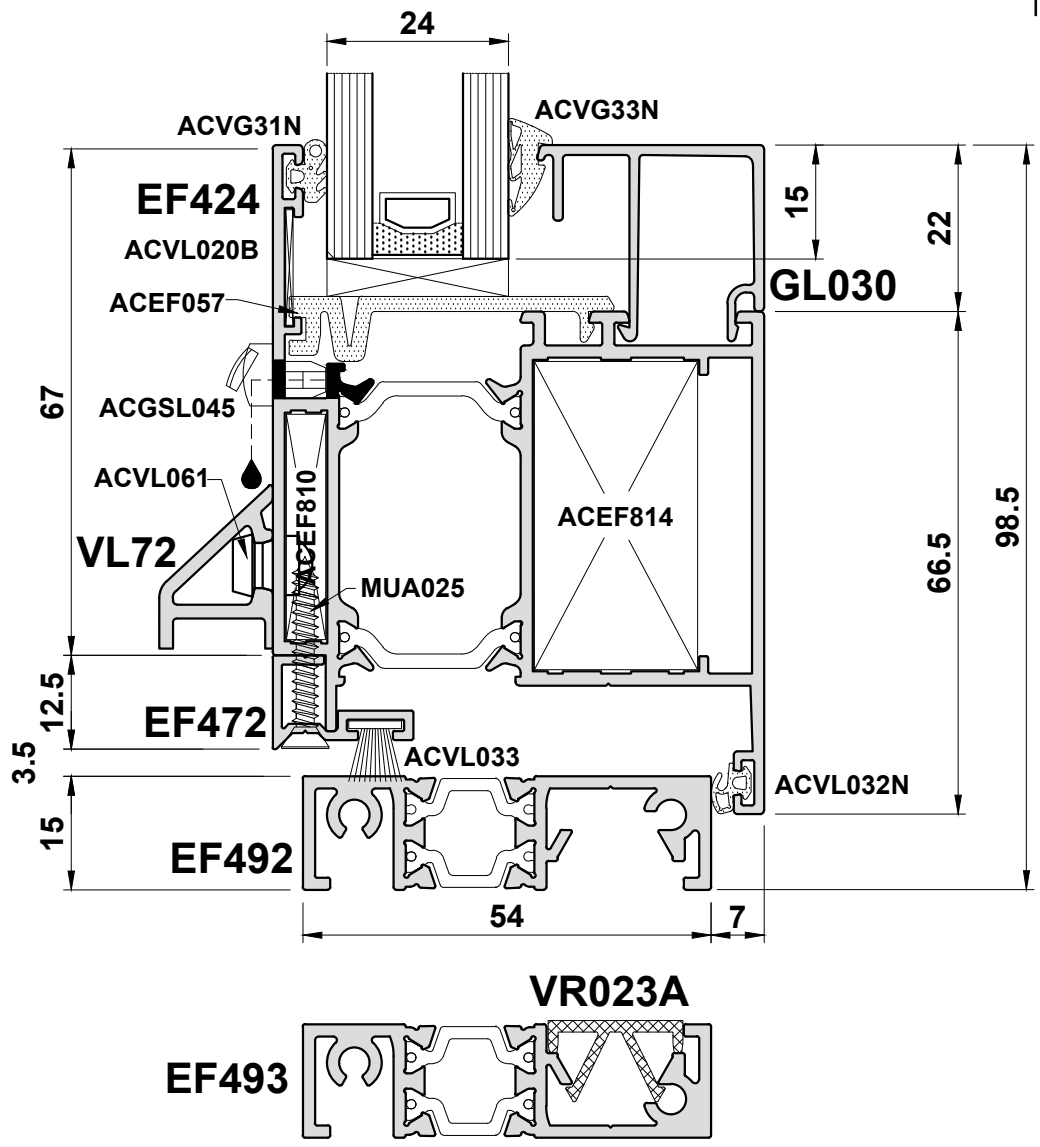

Do Not Scale From This Drawing

Open In Doors - Detail 34C

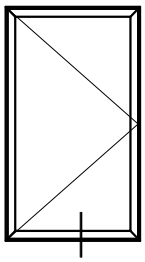

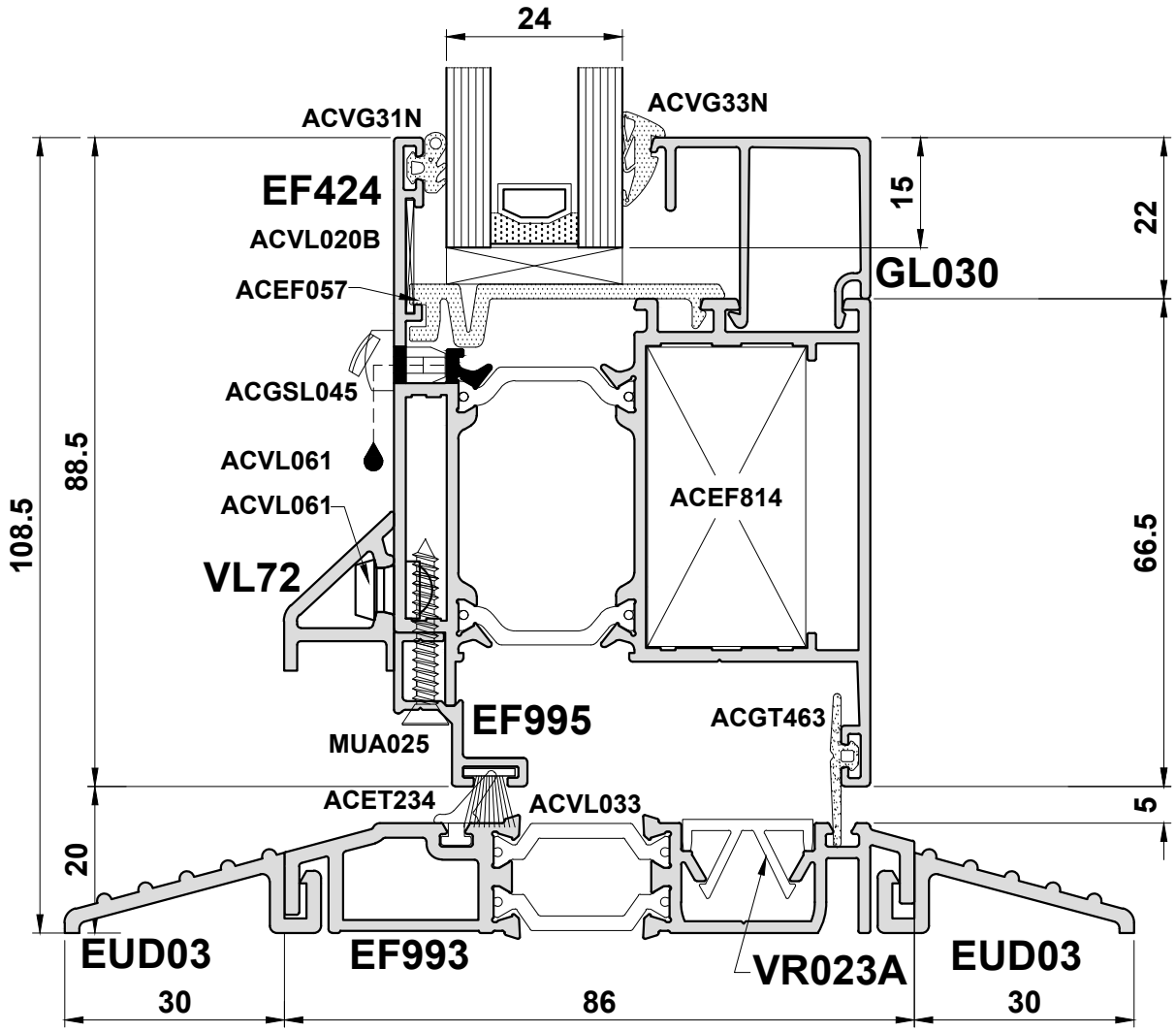

Do Not Scale From This Drawing

Open In Doors - Detail 35

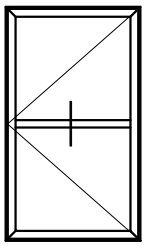

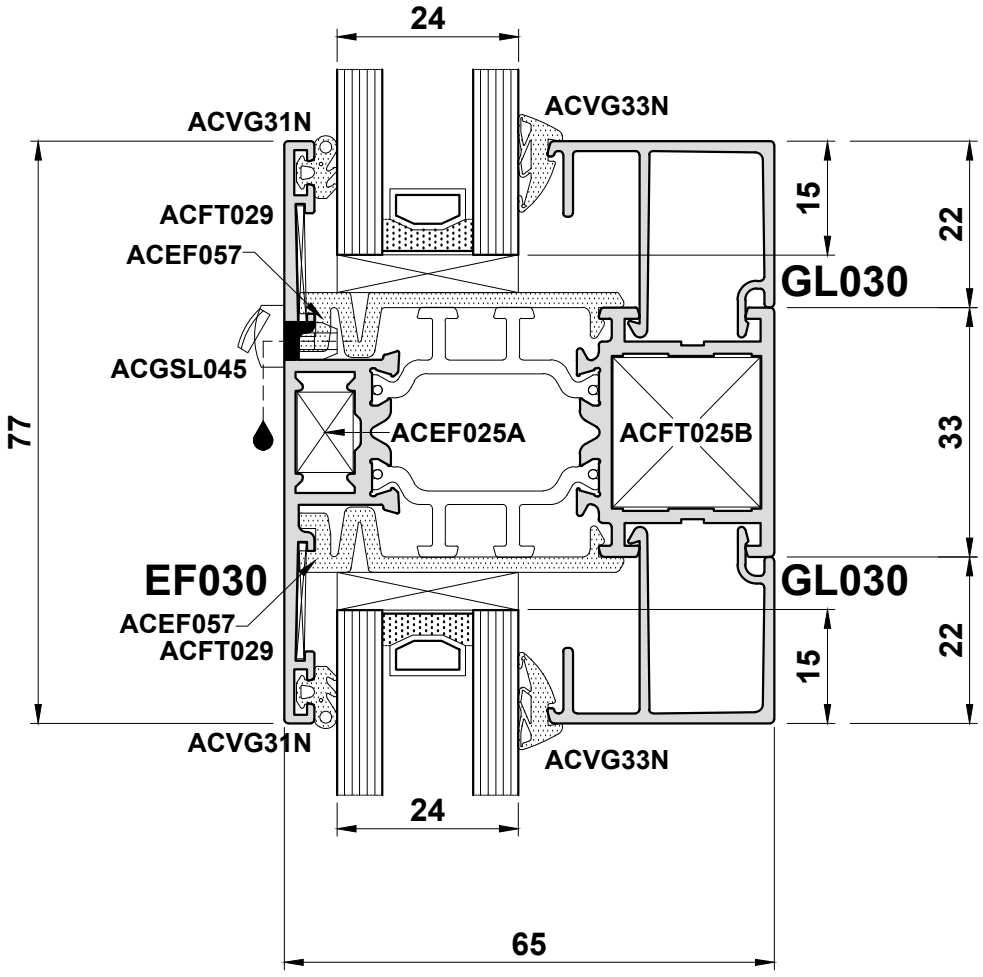

Do Not Scale From This Drawing

Open In Doors - Detail 36A

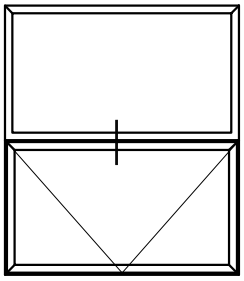

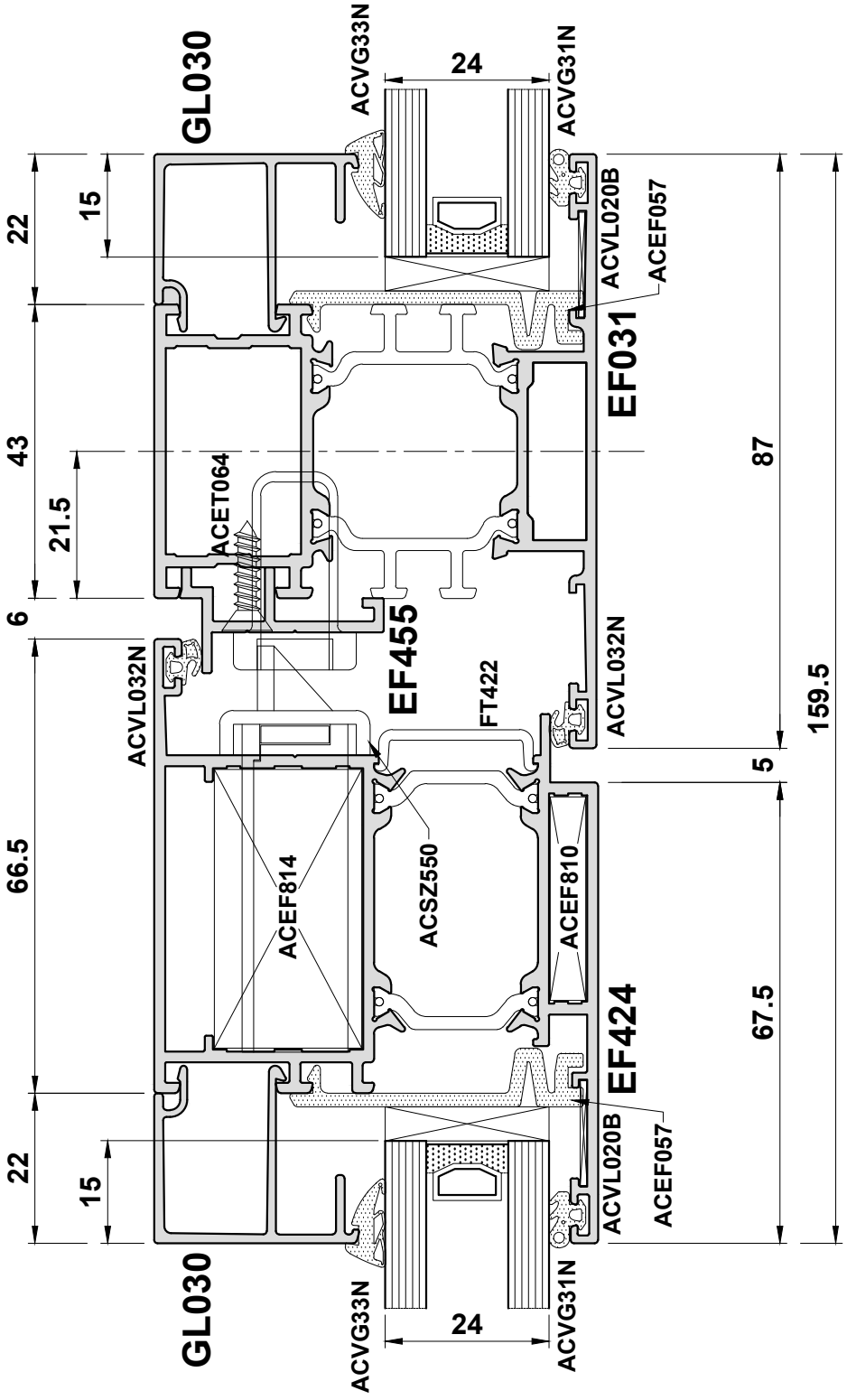

Do Not Scale From This Drawing

Open In Doors - Detail 36B

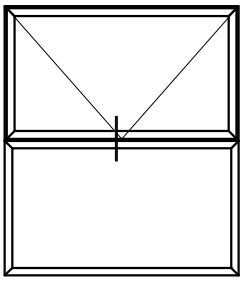

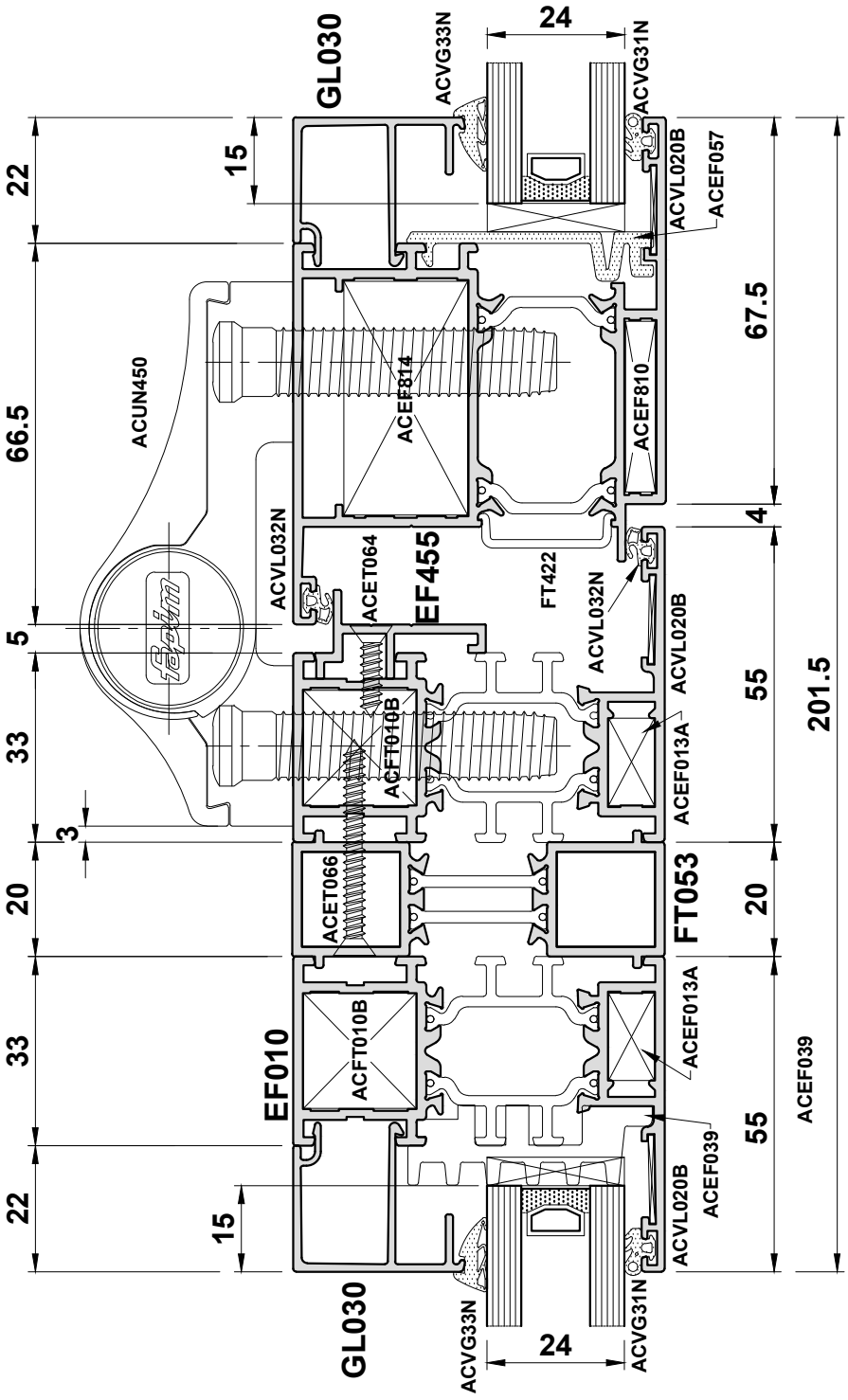

Do Not Scale From This Drawing

Open In Doors - Detail 37

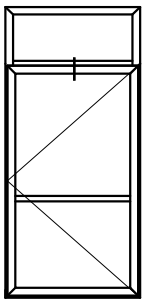

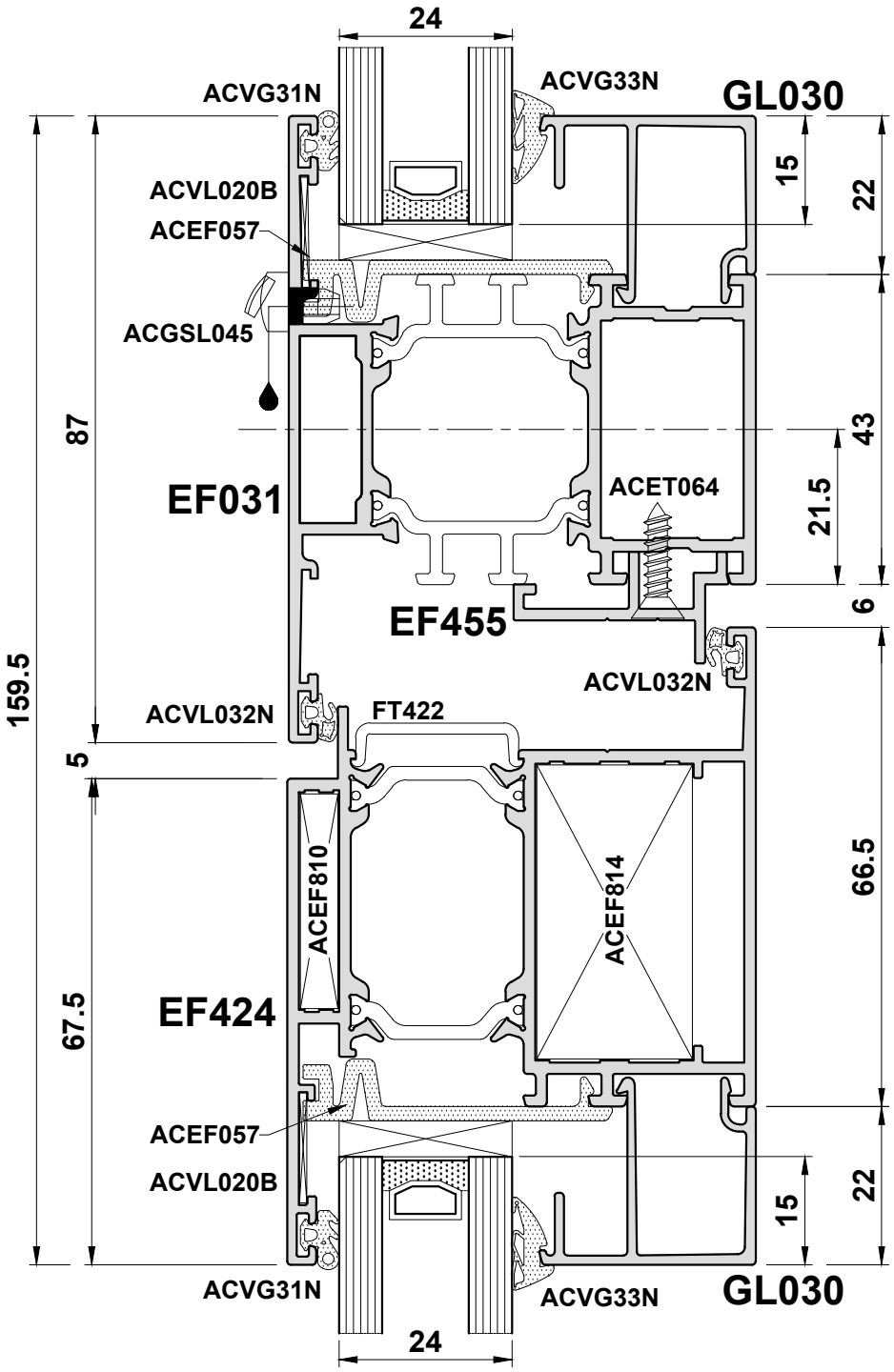

Do Not Scale From This Drawing

Open Out Doors - Scale Elevations

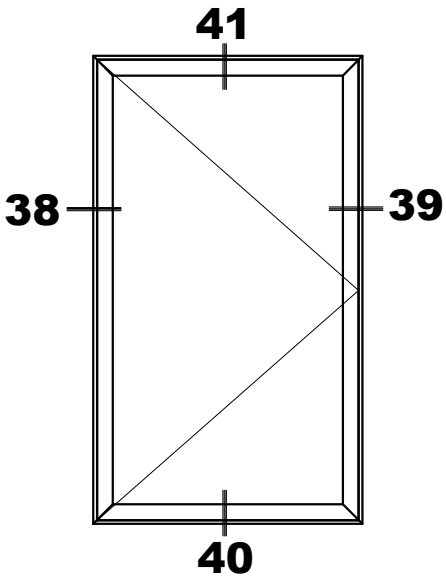

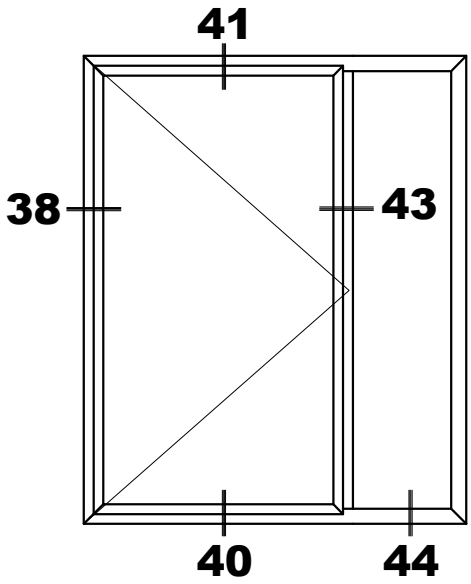

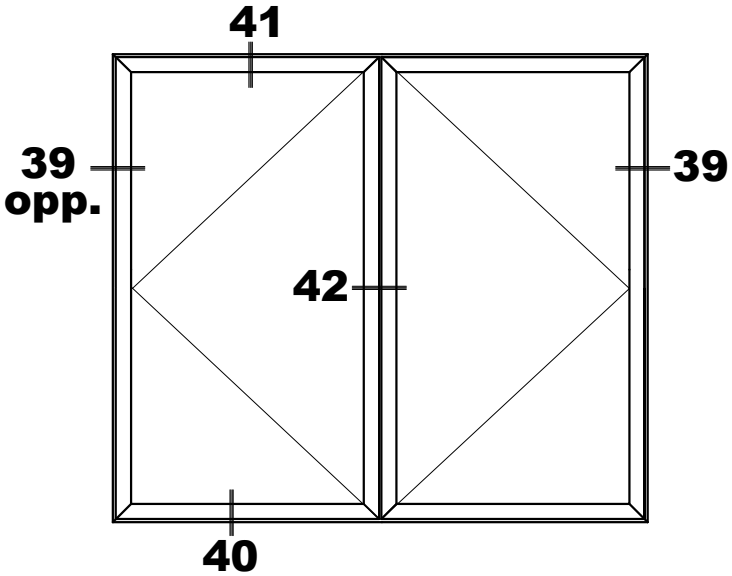

Do Not Scale From This Drawing

Open Out Doors - Detail 38

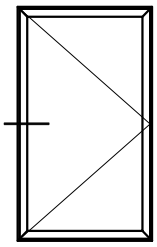

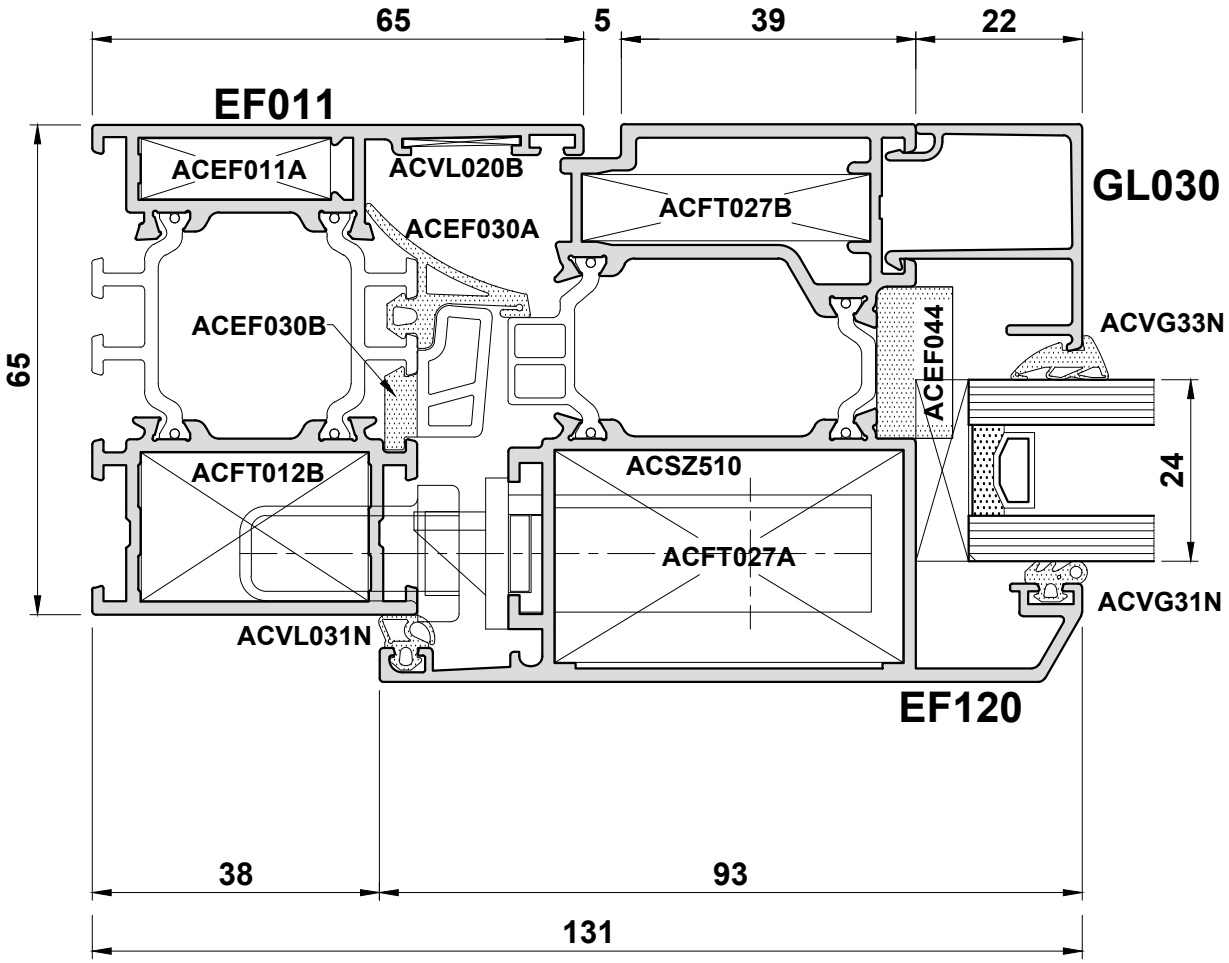

Do Not Scale From This Drawing

Open Out Doors - Detail 39

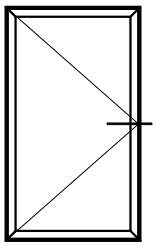

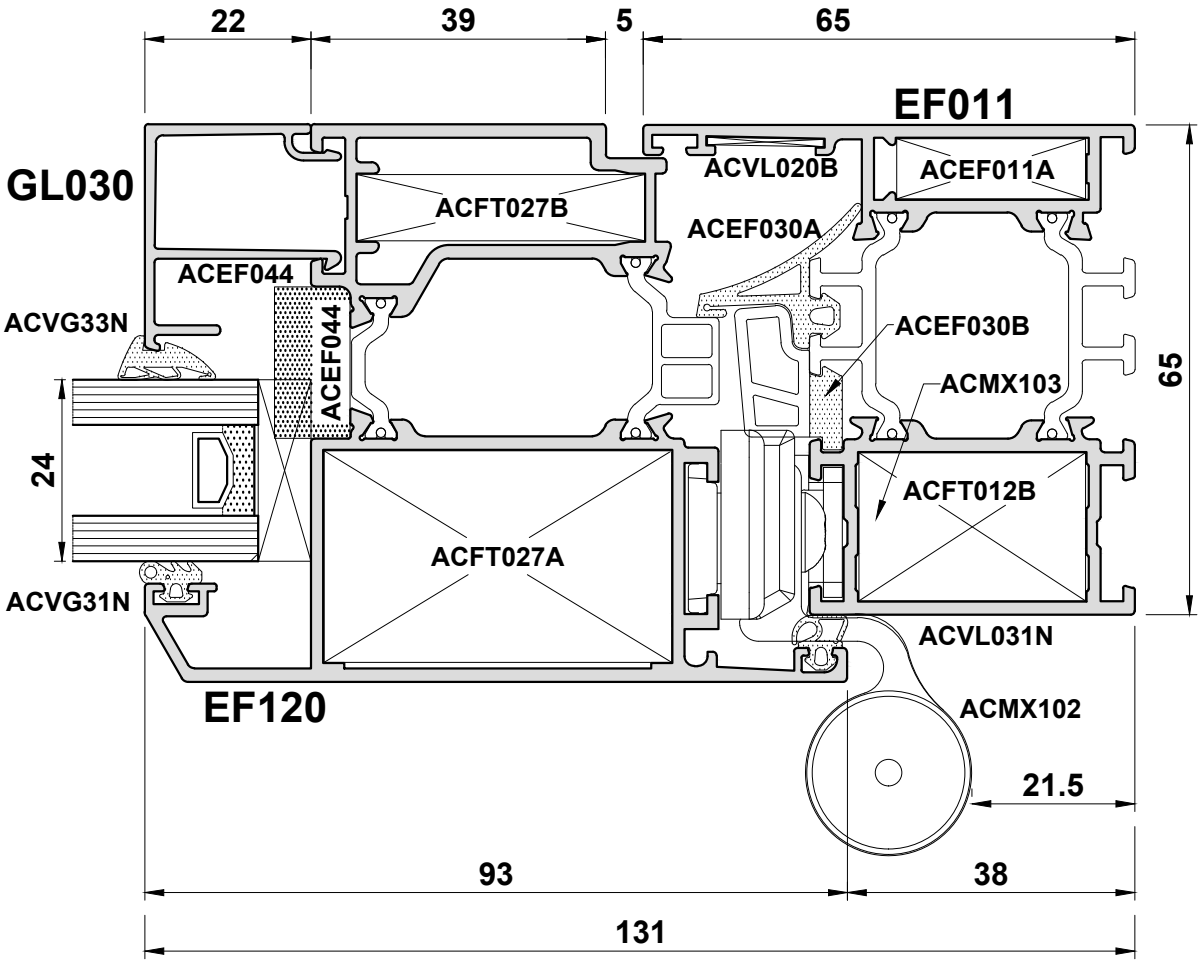

Do Not Scale From This Drawing

Open Out Doors - Detail 40A

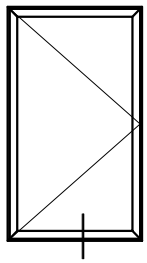

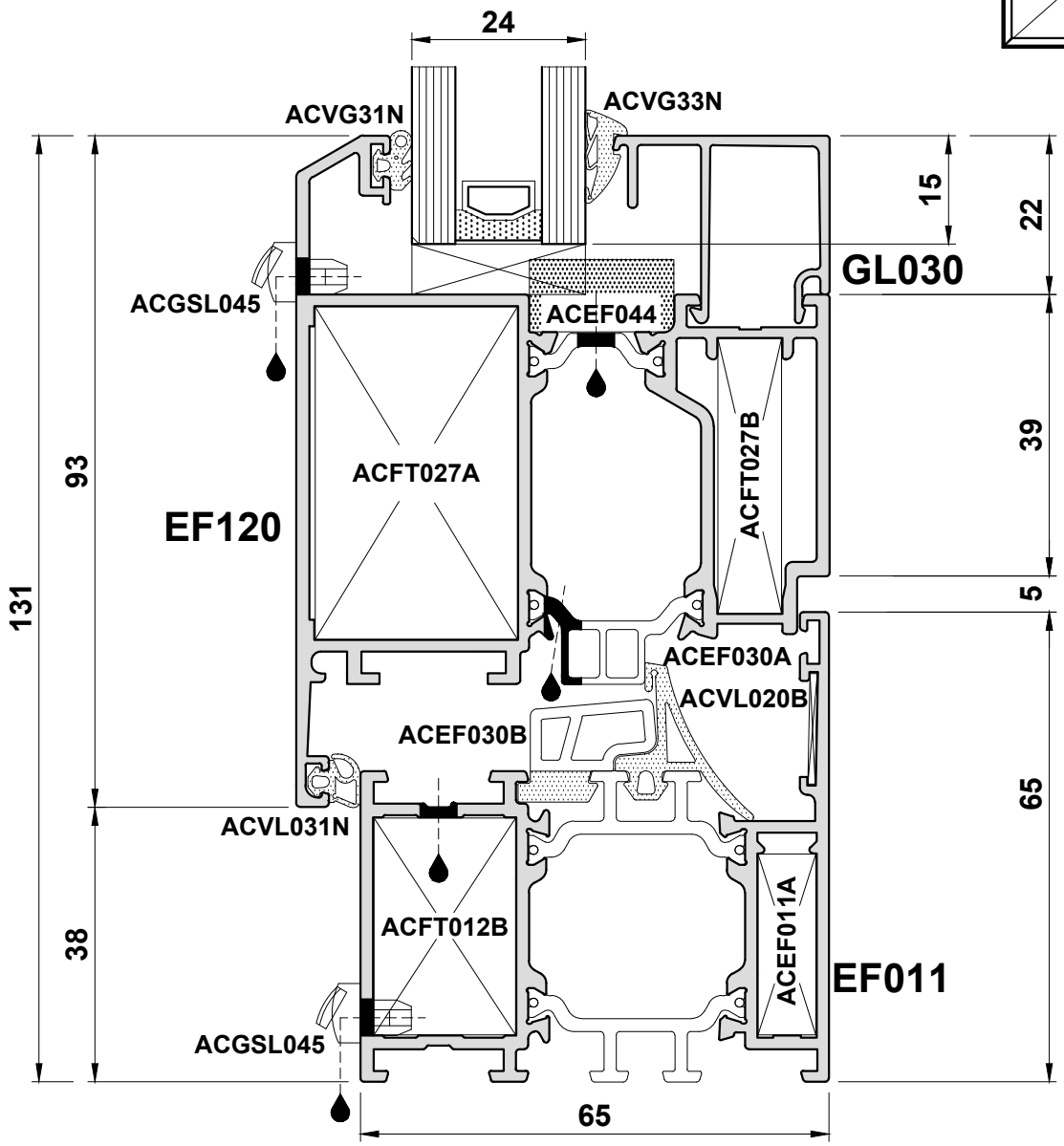

Do Not Scale From This Drawing

Open Out Doors - Detail 40B

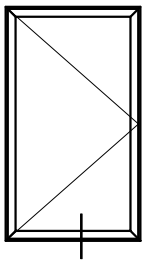

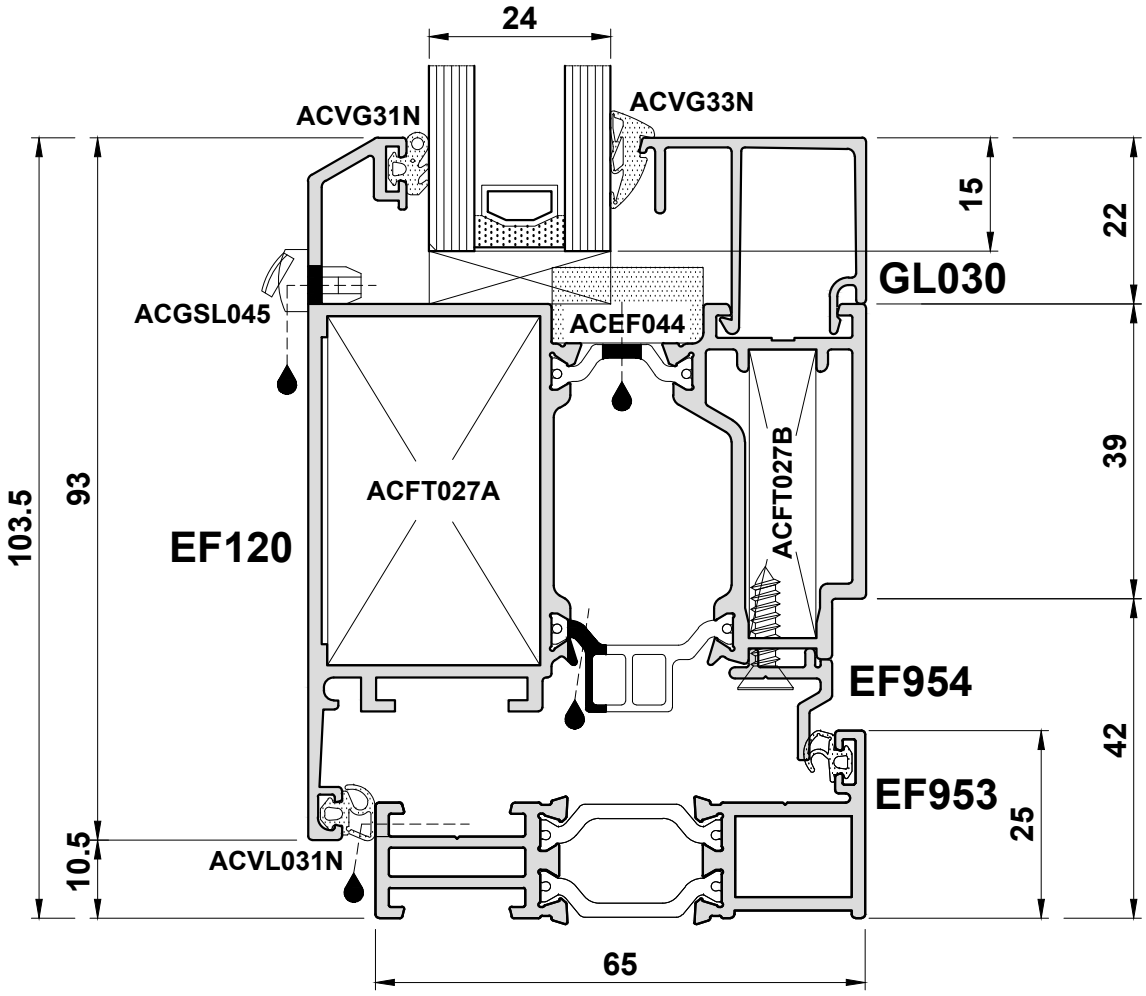

Do Not Scale From This Drawing

Open Out Doors - Detail 41

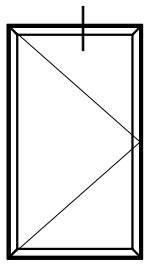

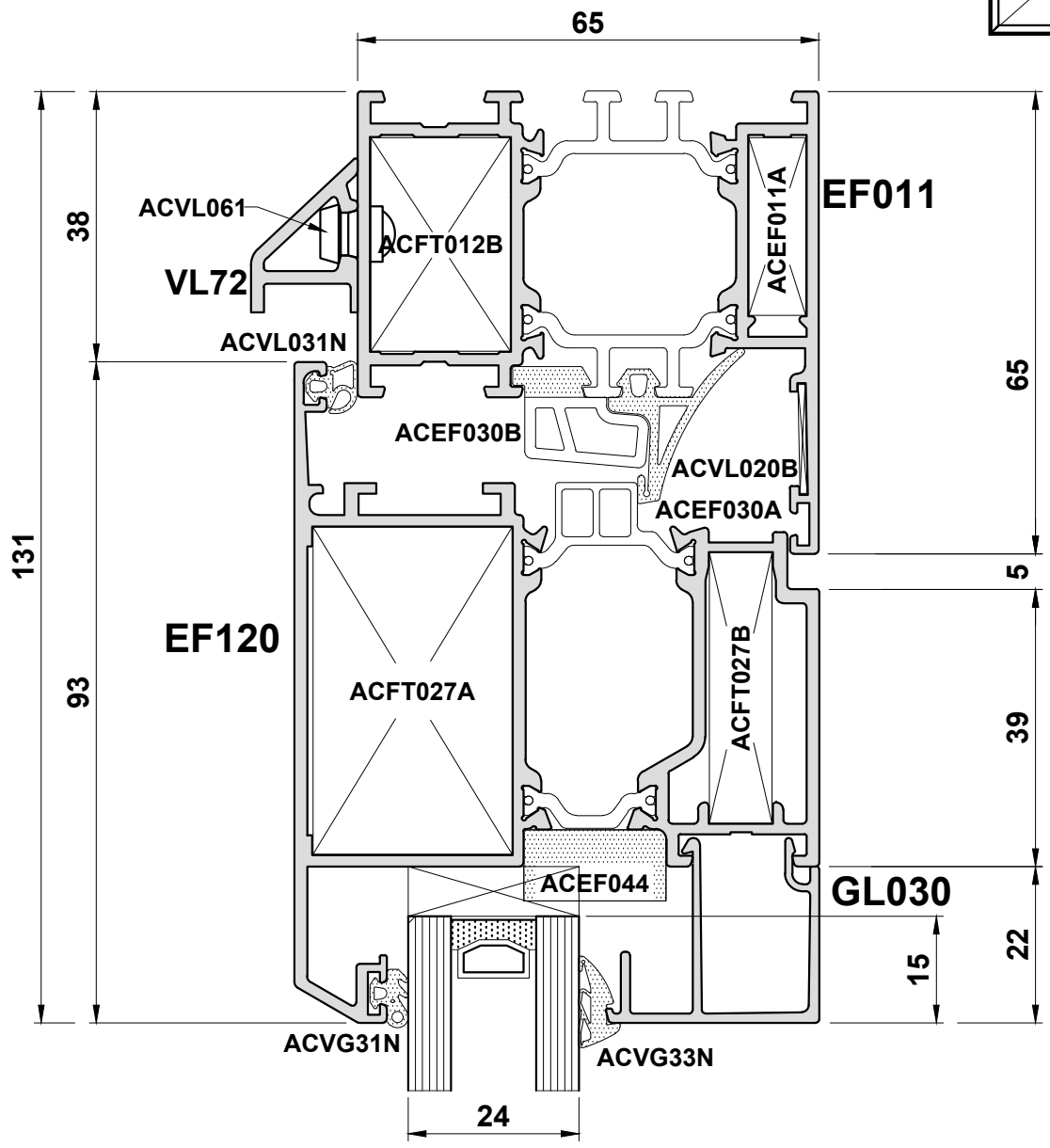

Do Not Scale From This Drawing

Open Out Doors - Detail 42

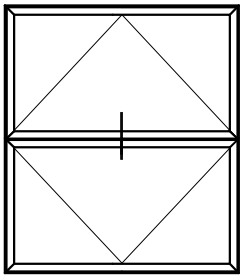

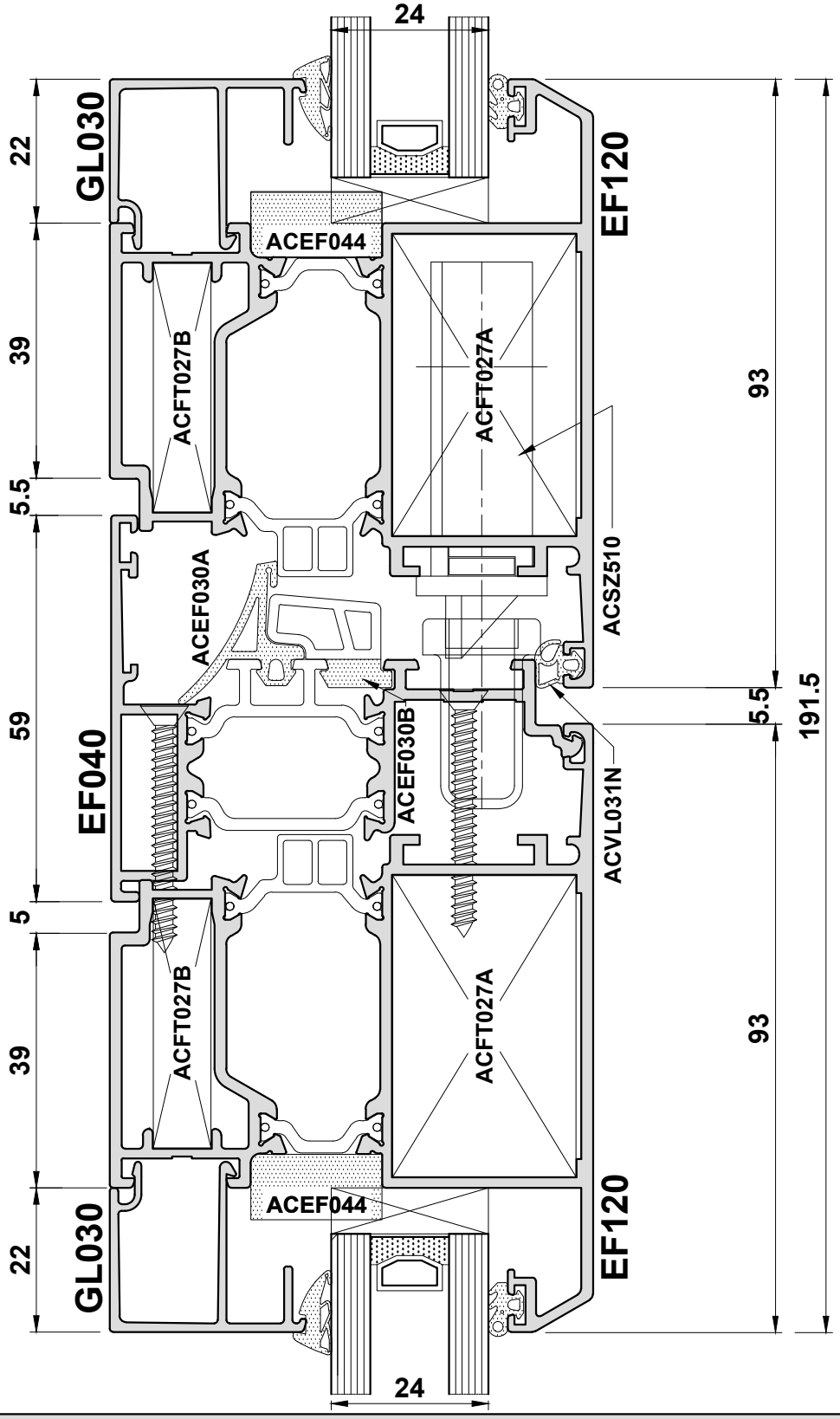

Do Not Scale From This Drawing

Open Out Doors - Detail 43

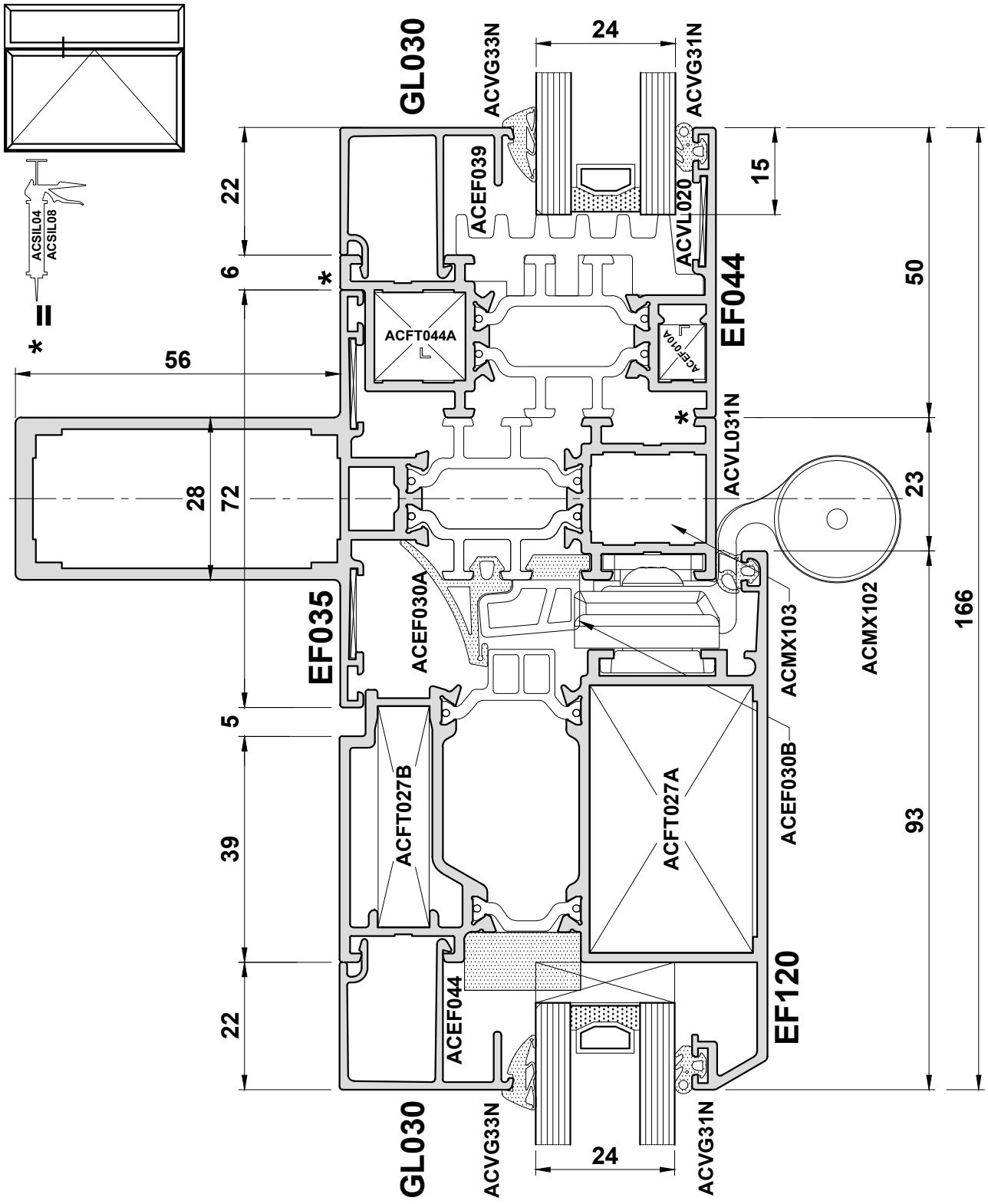

Do Not Scale From This Drawing

Open Out Doors - Detail 44

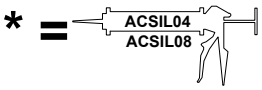

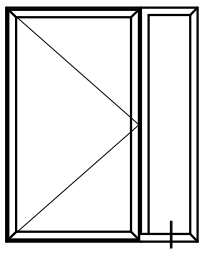

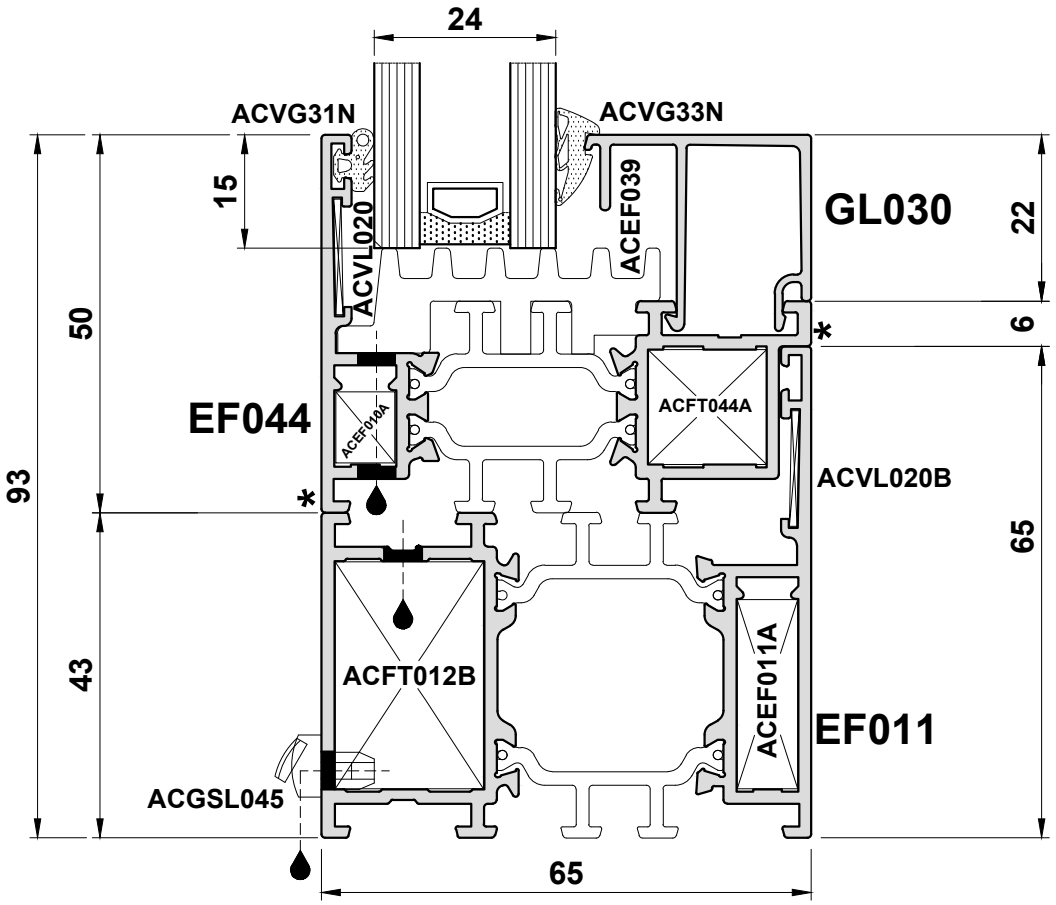

Do Not Scale From This Drawing

Open In Doors - Scale Elevations

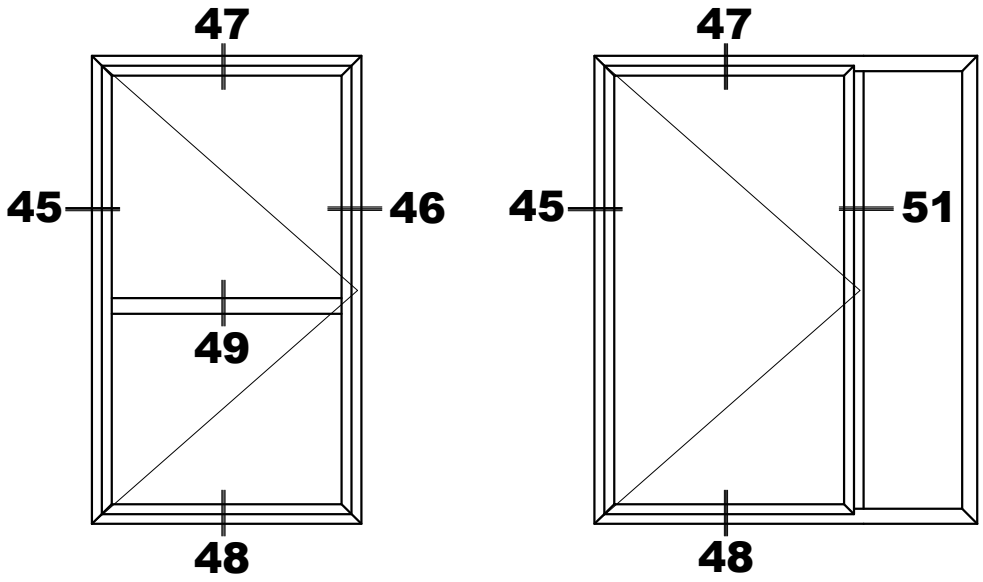

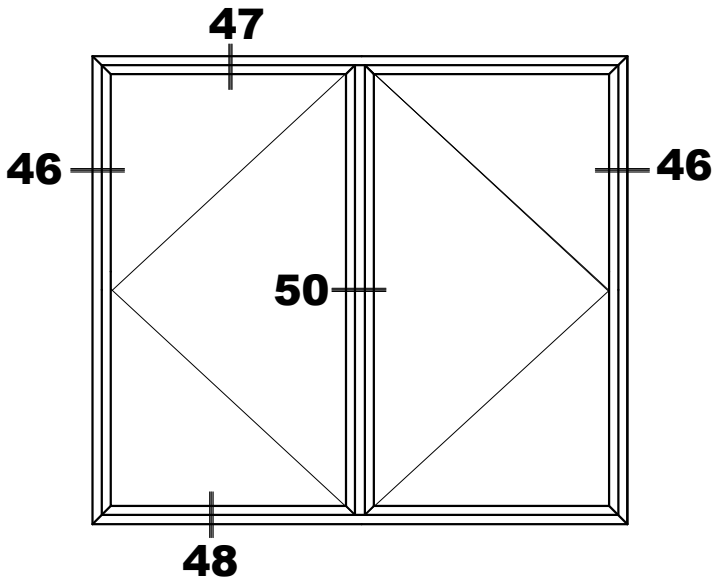

Do Not Scale From This Drawing

Open In Doors - Detail 45

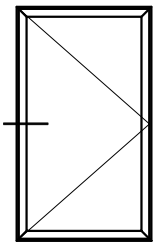

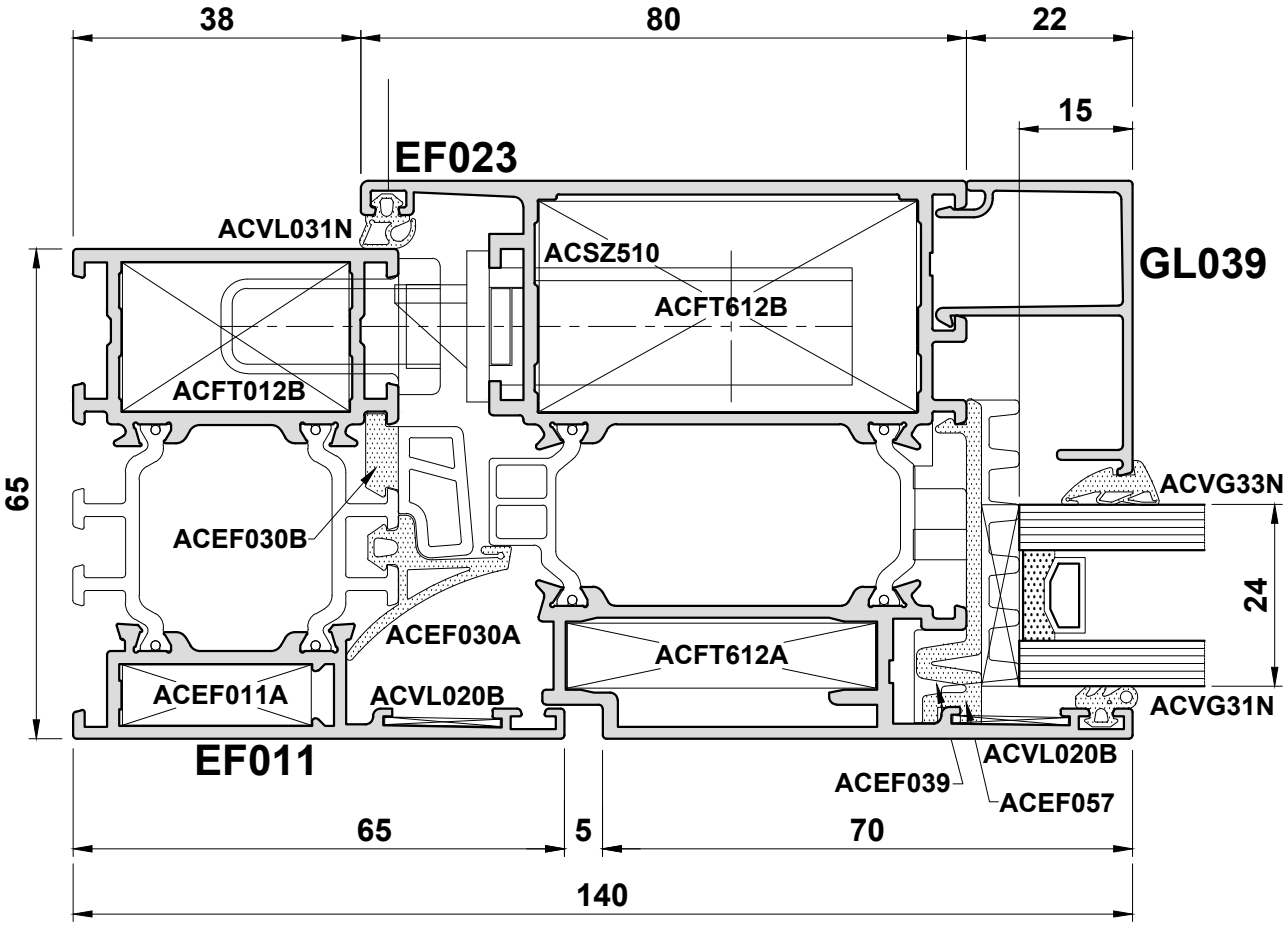

Do Not Scale From This Drawing

Open In Doors - Detail 46

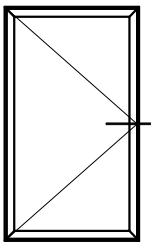

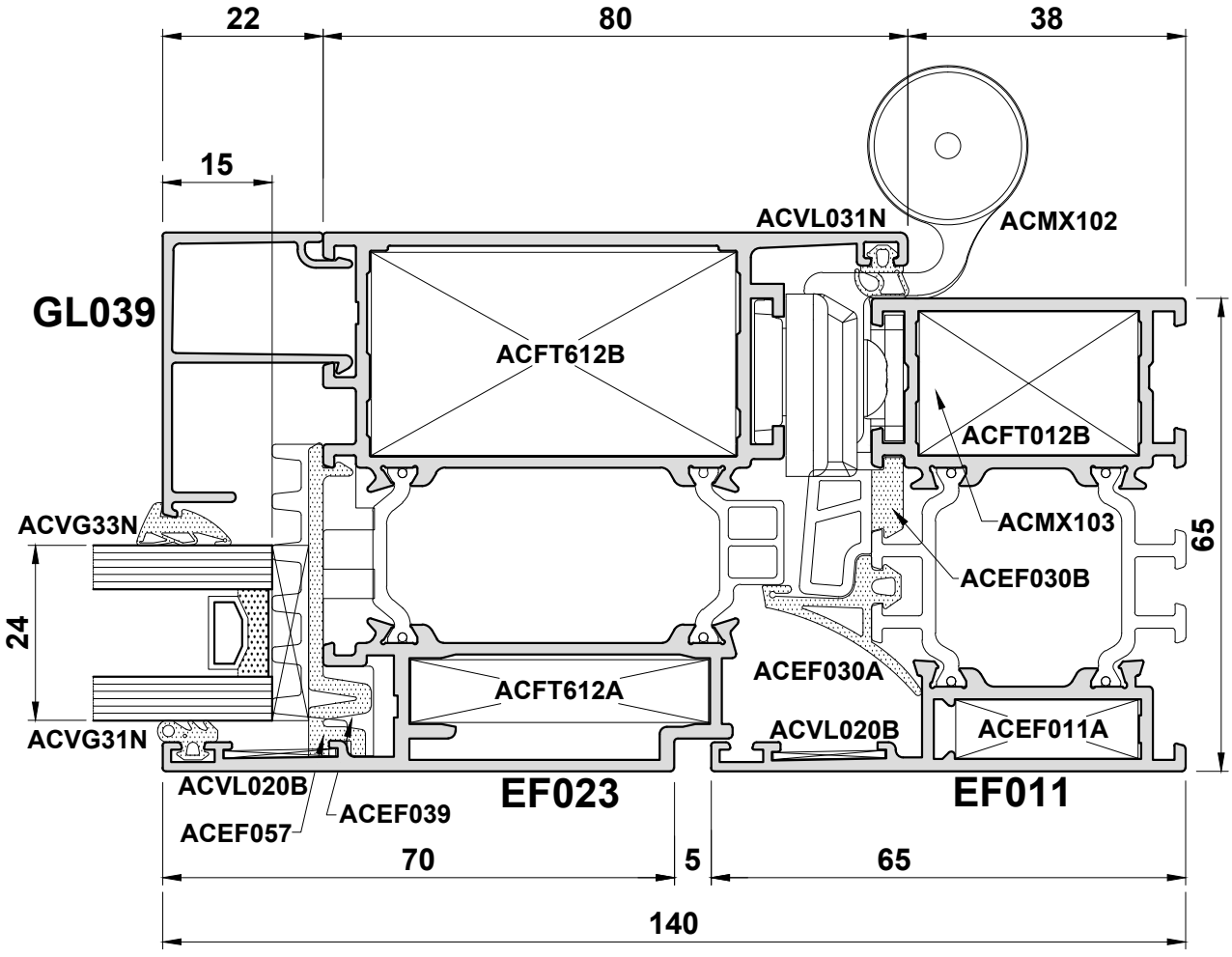

Do Not Scale From This Drawing

Open In Doors - Detail 47

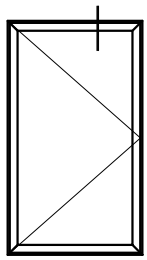

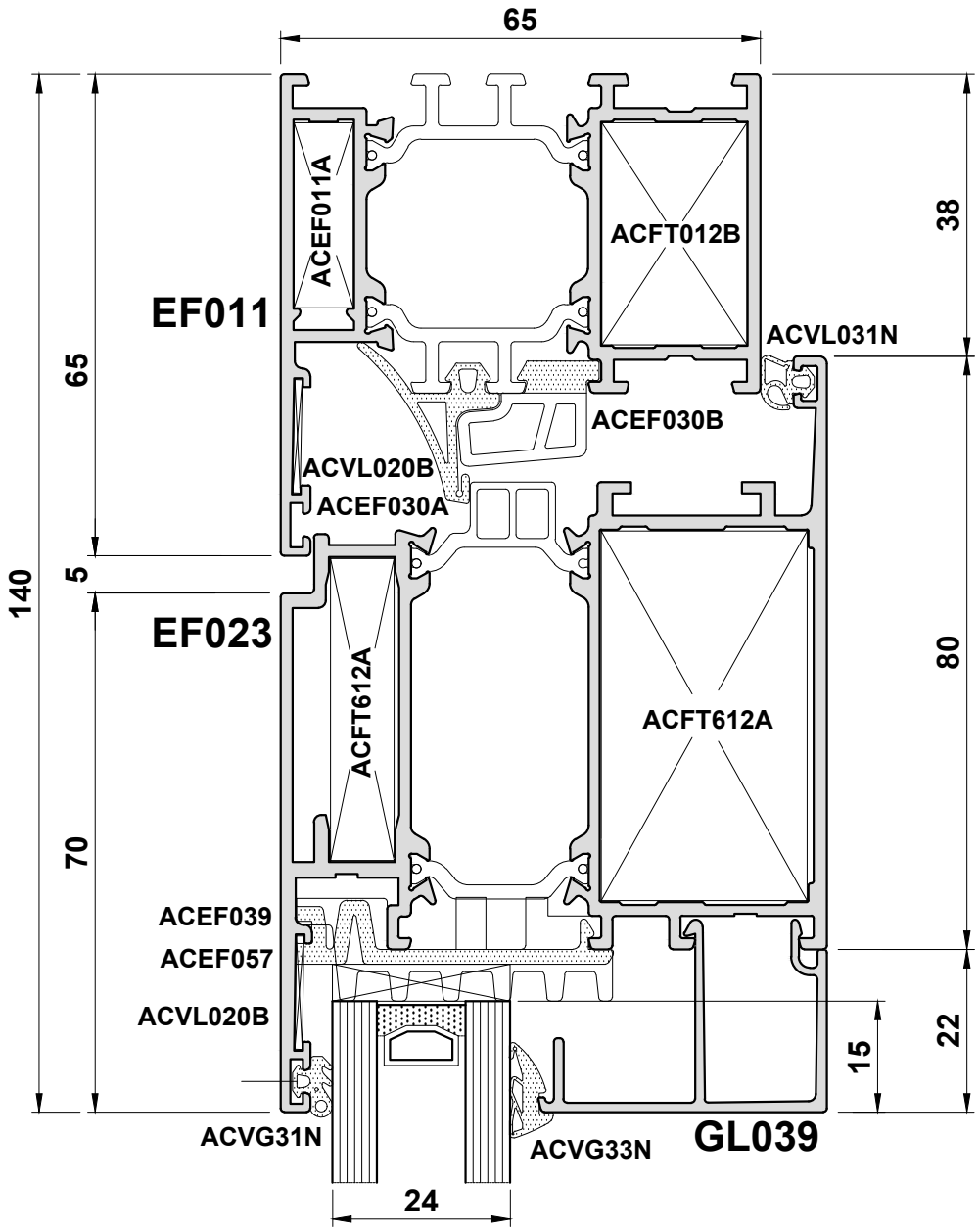

Do Not Scale From This Drawing

Open In Doors - Detail 48A

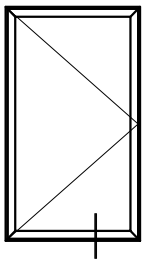

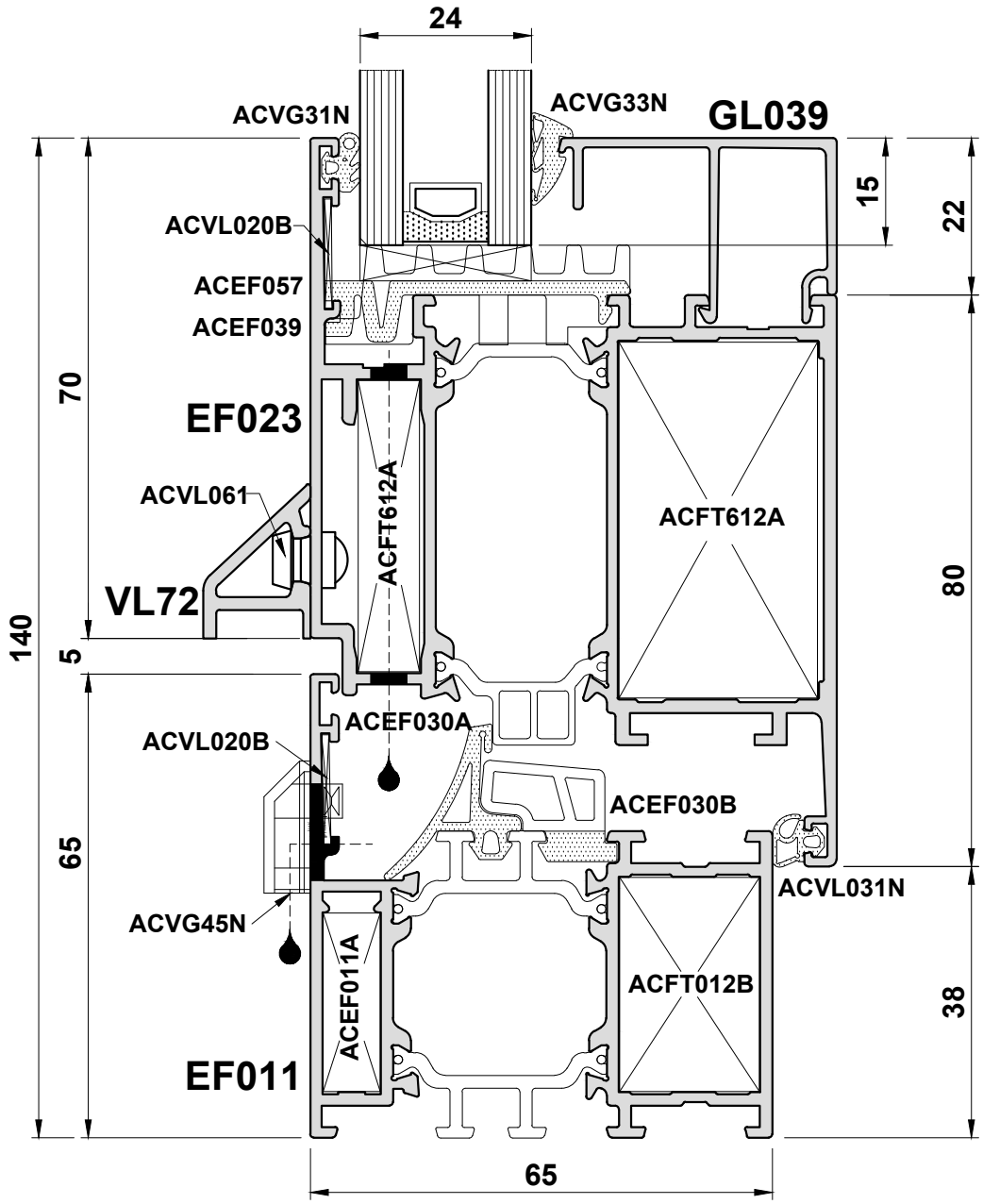

Do Not Scale From This Drawing

Open In Doors - Detail 48B

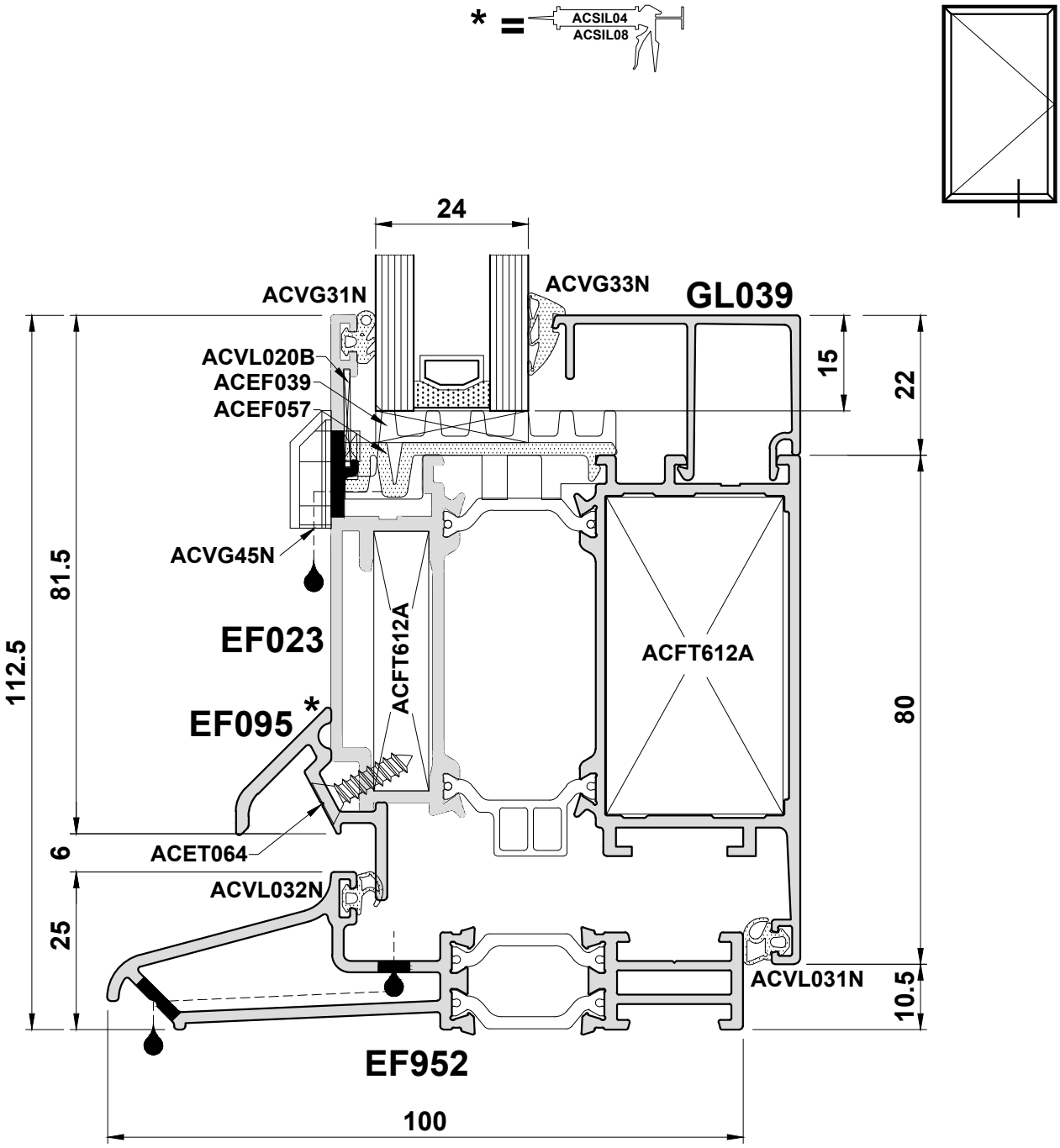

Do Not Scale From This Drawing

Open In Doors - Detail 49

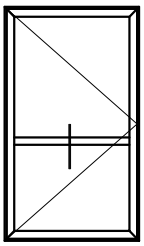

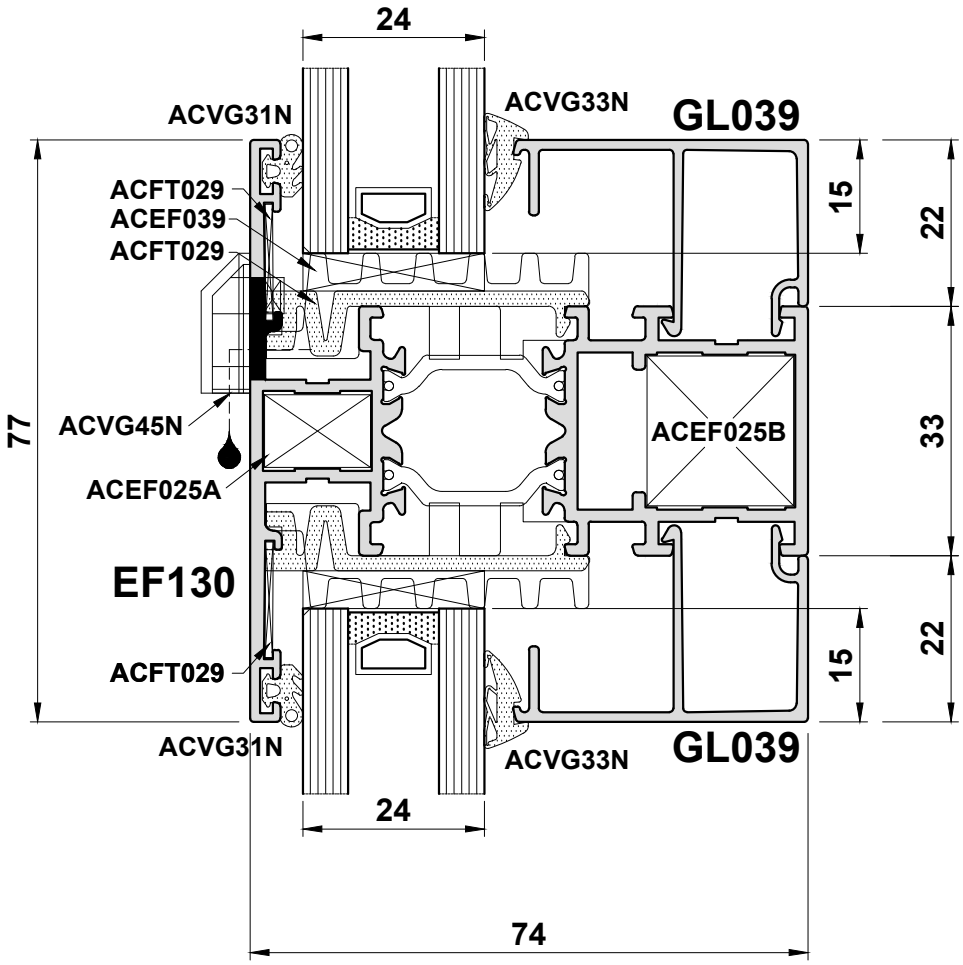

Do Not Scale From This Drawing

Open In Doors - Detail 50

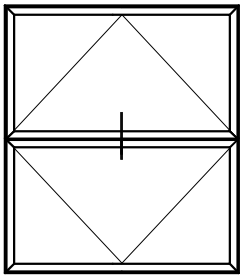

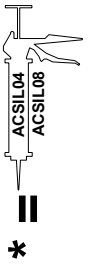

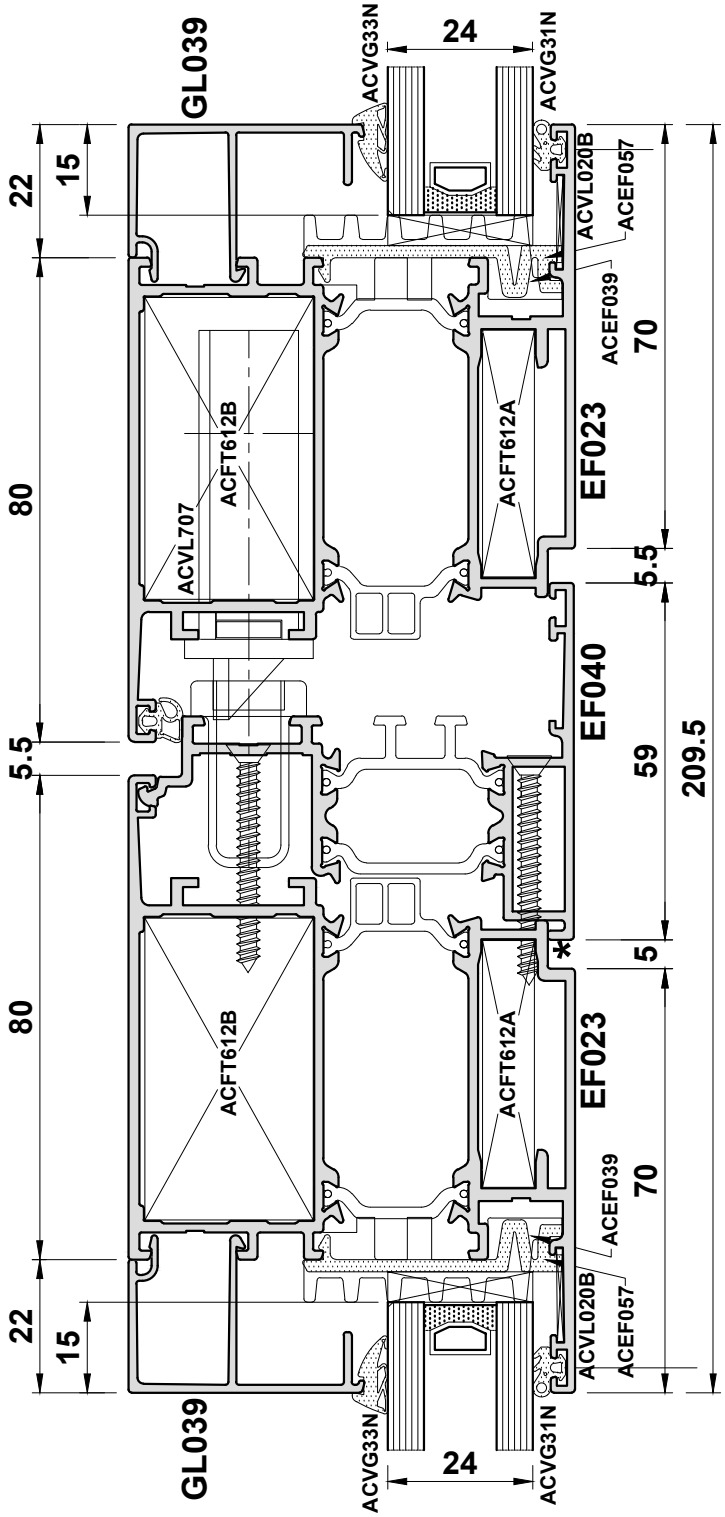

Do Not Scale From This Drawing

Open In Doors - Detail 51

Note: Mullion detail not compatible with EF952 threshold

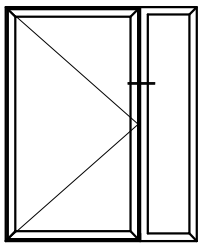

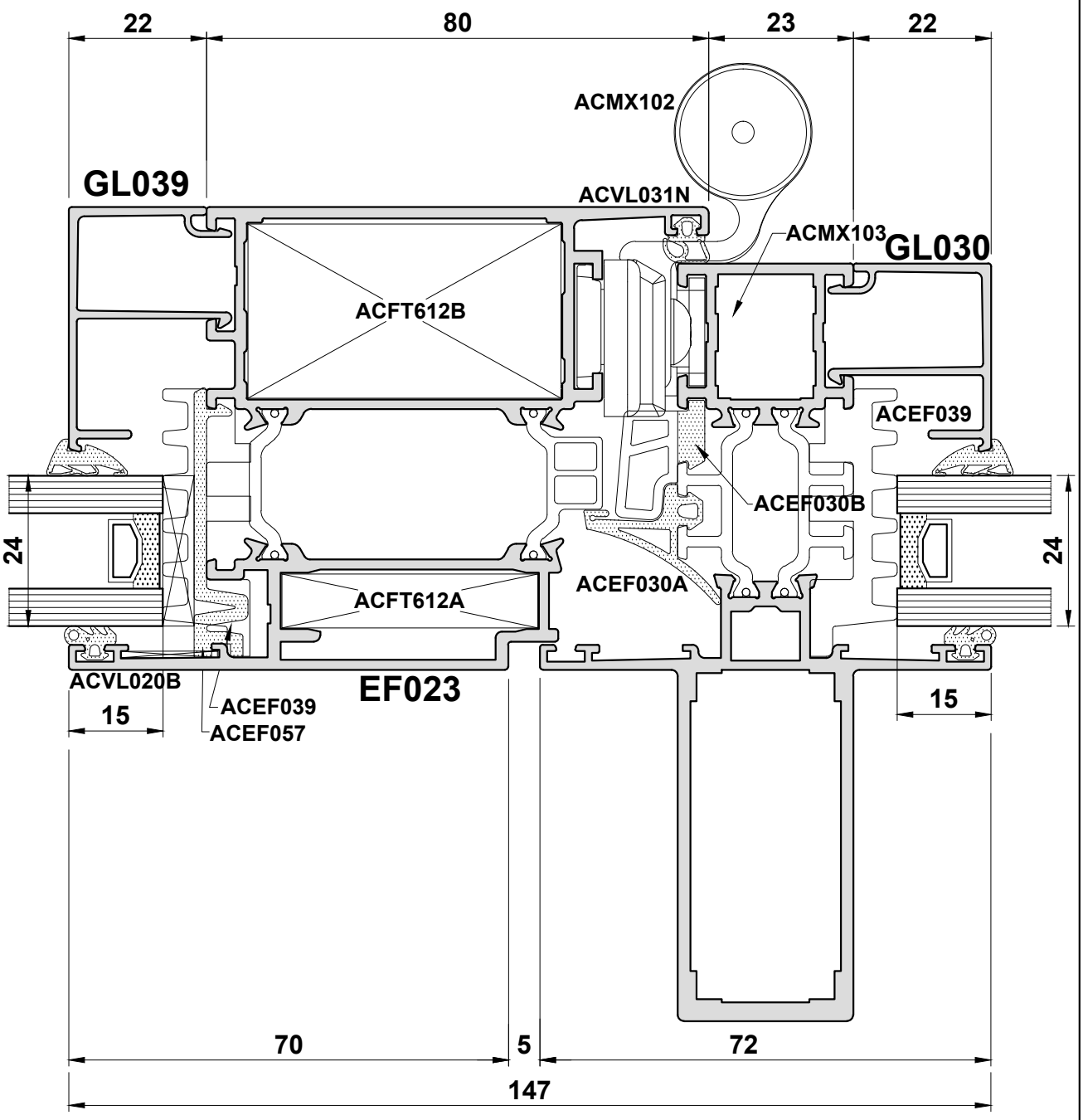

Do Not Scale From This Drawing

This page is intentionally left blank

Section D

Statics

General Size Limitations are shown on Page A05.

**For Additional Wind Loading Limitations,
Please Contact
The Technical Department - T: 01934 876100**

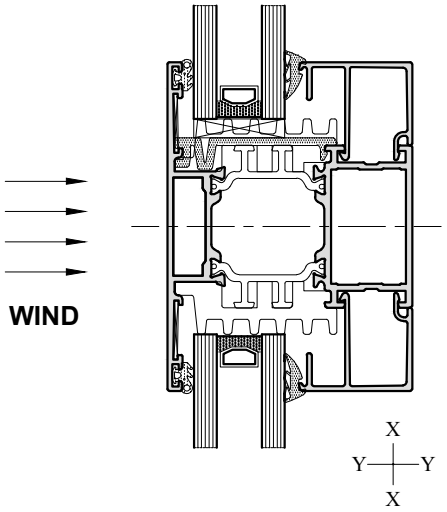

The position of the axes is an indication for the use and application of the moments of inertia (Ix and Iy) and the section modulus (Wx and Wy). We always choose the values of the axis perpendicular to the load to resist it.

- **To resist the wind loads we use the values Ix and Wx.**

EXAMPLE

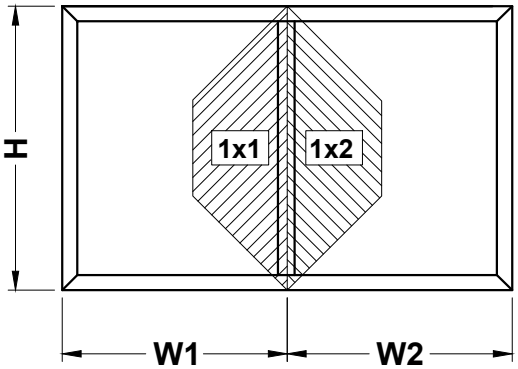

H = 180cm

W1 = 120cm

W2 = 100cm

P = 1250 Pa (wind pressure)

1) Determine Ixx value for the stiles (if required) using the Specification Wizard

Ixx = 29.8 cm4

2) Determine suitability

OK

E = Reinforcement Externally I = Reinforcement Internally			Without Reinforcement		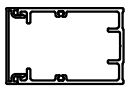 UN510	
	Section		Ix(cm4) wx(cm3)	Iy(cm4) wy(cm3)	Ix(cm4) wx(cm3)	Iy(cm4) wy(cm3)
EF030		E	28.33 — 7.44	10.93 — 2.83	89.63 — 14.51	20.37 — 5.29
		I			- — -	- — -
EF031	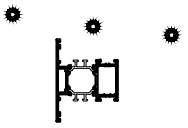	E	32.15 — 8.64	14.81 — 4.09	97.58 — 15.33	27.24 — 6.26
		I			119.68 — 17.21	27.24 — 6.26

Section D

Moments of Inertia Table

E = Reinforcement Externally
I = Reinforcement Internally

Reinforcement profiles shall be fixed at a maximum of 300mm centres and 100mm in from each end

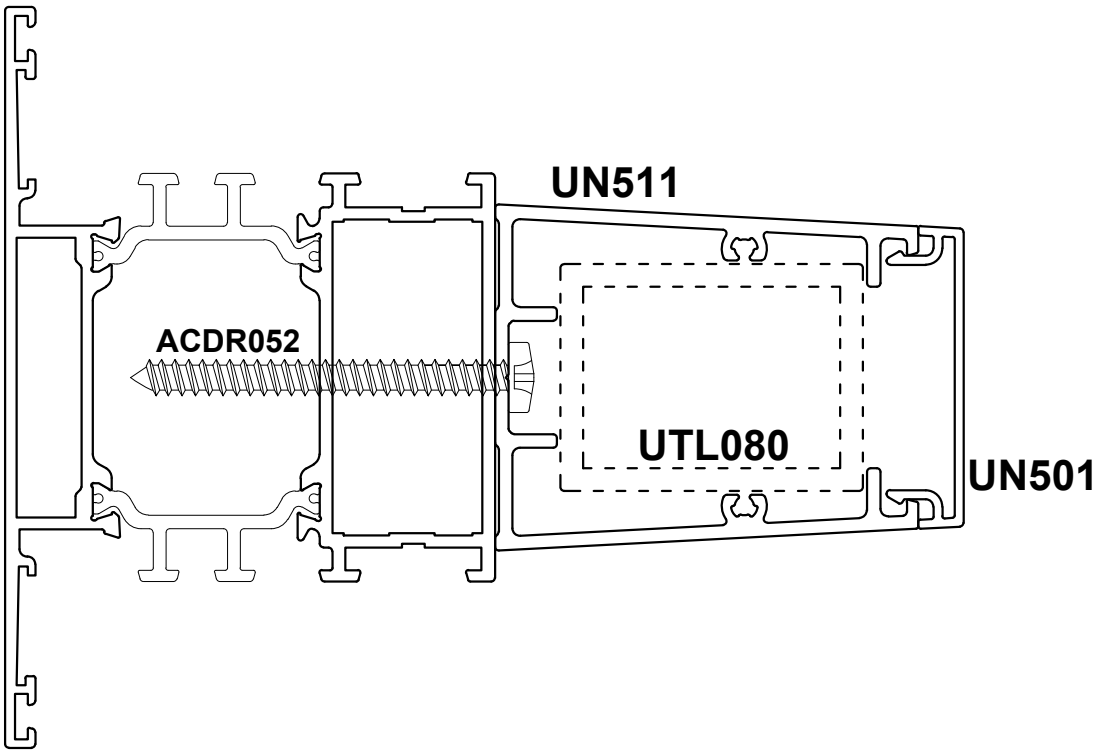

Reinforcement profiles cannot be used where a hinge is used on the same mullion.

Section D

E = Reinforcement Externally I = Reinforcement Internally			Without Reinforcement		UN510		UN510 + UTL080		UN511		UN511 + UTL080	
Section			lx(cm4) wx(cm3)	ly(cm4) wy(cm3)	lx(cm4) wx(cm3)	ly(cm4) wy(cm3)	lx(cm4) wx(cm3)	ly(cm4) wy(cm3)	lx(cm4) wx(cm3)	ly(cm4) wy(cm3)	lx(cm4) wx(cm3)	ly(cm4) wy(cm3)
EF030		E	28.33 7.44	10.93 2.83	89.63 14.51	20.37 5.29	128.58 18.32	25.45 6.61	91.79 15.04	22.42 5.82	129.76 18.41	27.49 7.14
		I			-	-	-	-	-	-	-	-
EF031		E	32.15 8.64	14.81 4.09	97.58 15.33	27.24 6.26	140.8 20.6	32.32 7.41	99.98 15.89	29.29 6.73	142.1 20.7	34.37 7.9
		I			119.68 17.21	27.24 6.26	175.15 27.24	32.32 7.43	-	-	-	-
EF032		E	36.67 9.95	28.45 5.81	105.5 16.13	37.87 7.73	153.04 42.95	42.95 8.76	108.13 16.72	39.9 6.14	154.51 23.11	45.0 9.18
		I			126.83 17.85	37.88 7.73	186.99 29.91	42.95 8.76	130.29 18.52	39.92 8.15	188.84 30.02	45.01 9.18
EF033		E	32.24 8.72	10.9 2.83	98.26 15.39	20.35 5.28	141.84 20.79	25.43 6.6	100.69 15.95	22.39 5.81	143.16 20.89	27.47 7.13
		I			-	-	-	-	-	-	-	-
EF034		E	36.39 9.88	18.51 4.25	105.49 16.09	27.95 5.28	153.47 23.13	33.03 7.59	108.14 29.99	29.99 6.89	154.95 23.24	35.07 7.13
		I			156.51 19.98	29.06 6.68	239.03 36.61	34.14 7.84	130.43 18.53	29.99 6.89	189.54 30.23	35.07 8.06
EF035	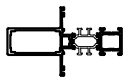	E	103.36 15.95	12.79 3.55	-	-	-	-	-	-	-	-
		I			-	-	-	-	-	-	-	-
EF036	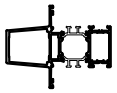	E	95.69 17.21	25.44 5.85	-	-	-	-	-	-	-	-
		I			260.11 29.16	34.87 8.02	378.5 40.88	39.95 9.18	-	-	-	-
EF930		E	26.6 6.93	6.11 1.91	-	-	-	-	-	-	-	-
		I			86.07 14.16	15.58 4.87	122.15 17.23	20.66 6.48	88.12 14.52	17.62 5.51	123.26 17.31	22.70 7.09

Section E

Construction Drawings
Windows:

Corner Joint Details		Page E03 - E06
Mullion/Transom Details		Page E07 - E09
Tilt & Turn	Size Limitations	Page E10
	Handle Preparation & Drainage	Page E11 - E12
	EF045 & ACEF055 Preparation	Page E13
Pivot	Overview	Page E14
	EF045 Preparation	Page E15
	ACVL093	Page E16
	ACVL090/91 Hinge Details	Page E17
Casement	Mullion / Transom Preparation	Page E18
	Drainage	Page E19 - E20
	Angled Sub Cill	Page E21
	Friction Hinge Fixing	Page E22
	Locking	Page E23 - E24
	Hinge Protectors/Pull In Blocks	Page E25
Example Layout		Page E26
Bay Pole Deductions		Page E27
Glazing		Page E65 - E68

Section E

Construction Drawings
Doors:

Flat Door	Joint Details.....	Page E28 - E31
	Ventilation/Drainage.....	Page E32
	Hinge Details.....	Page E33
	Open In Lock Details.....	Page E34 - E36
	Open Out Lock Details.....	Page E37 - E39
	ACEF891 Finger Bolt Preparation.....	Page E40 - E41
	Double Door Without Threshold	Page E42
	ACGT430 Preparation.....	Page E43
	Panic Bar.....	Page E44 - E47
	PAS24:2012 Overview.....	Page E48
Stepped Door	Joint Details.....	Page E49
	Ventilation/Drainage.....	Page E50
	Hinge Details	Page E51 - E53
	Open In Lock Details.....	Page E54 - E56
	Open Out Lock Details.....	Page E57 - E59
	EF952 & EF953 Double Door Detail.....	Page E60
	ACVL432 Shoot Bolt.....	Page E61
	ACGT430 Preparation.....	Page E62 - E63
	PAS24:2012 Overview.....	Page E64
Glazing.....		Page E65 - E68
Example Layout.....		Page E69 - E70
Smoke Vent.....		Page E71 - E72

Door & Window Corner Joint Details

Notes

1. Degrease mitre sections
2. Cover mitred faces with ACSIL04
3. Apply ACSIL013 to cleat chambers
4. Apply ACSIL04 to any fractures formed by crimping to make watertight

Table 1

KL Colour	Sealant Part Number
Black	ACSIL04BL
White	ACSIL04WP
Clear	ACSIL04CL
KL001	ACSIL04KL001
KL002	ACSIL04KL002
KL003	ACSIL04KL003
KL004	ACSIL04KL004
KL005	ACSIL04KL005
KL006	ACSIL04KL006
KL007	ACSIL04KL007
KL010	ACSIL04KL010
KL011	ACSIL04KL011
KL012	ACSIL04KL012
KL013	ACSIL04KL013

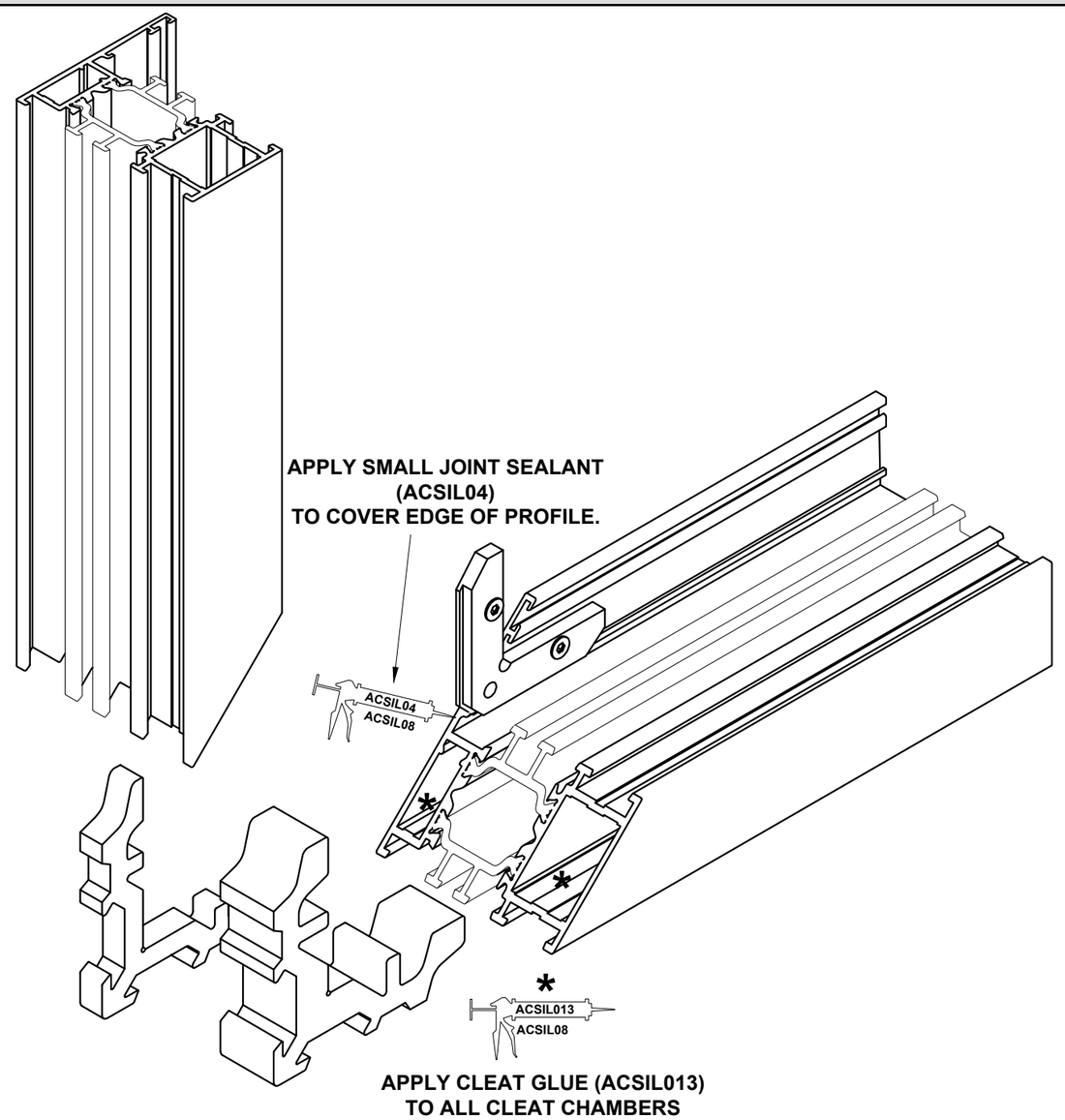

To ensure accurate corners, we recommend the use of support blocks (by others) whilst cutting.

Do Not Scale From This Drawing

Door & Window Crimping

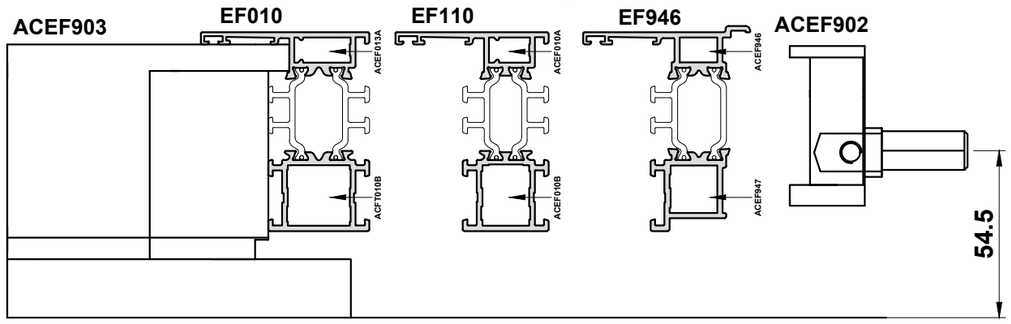

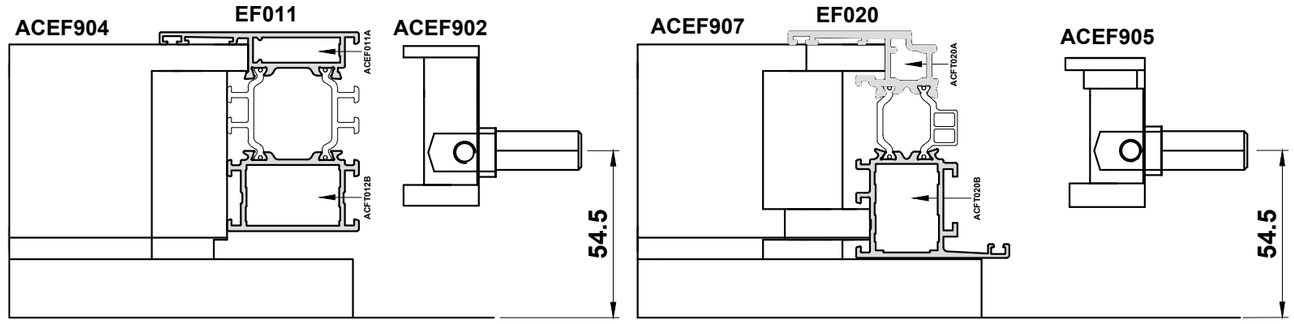

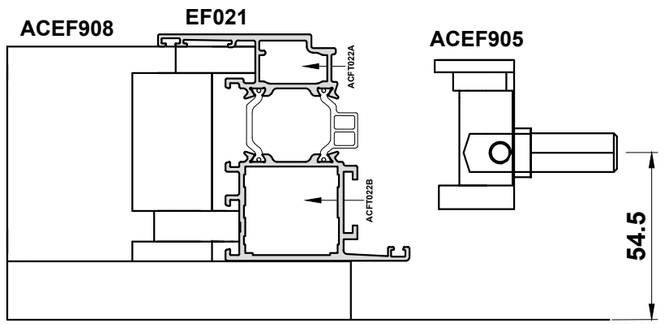

Manual Crimper = WUT024HSZA

Important Note:

The majority of Eco Futural sections require a pneumatic crimper with specific tooling designed for the sections and cleats. The tooling may be bought from your crimper manufacturer or via Jade Engineering Tel: 024 7636 5336 Email: sales@jade-eng.co.uk

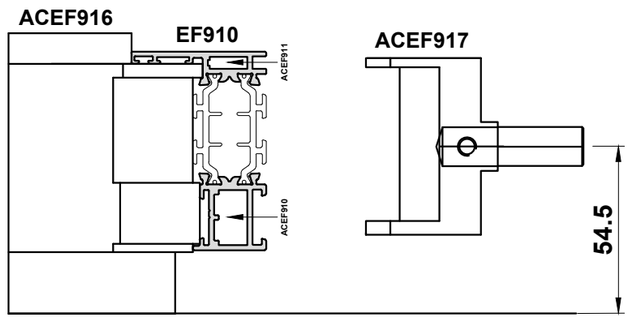

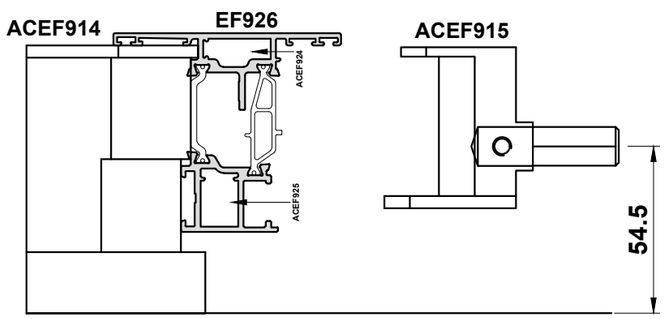

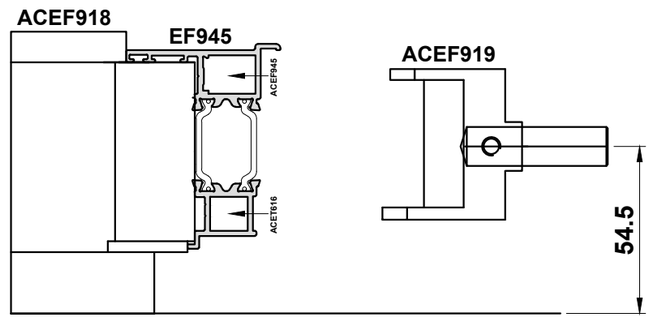

Do Not Scale From This Drawing

ACUN020

ACUN020

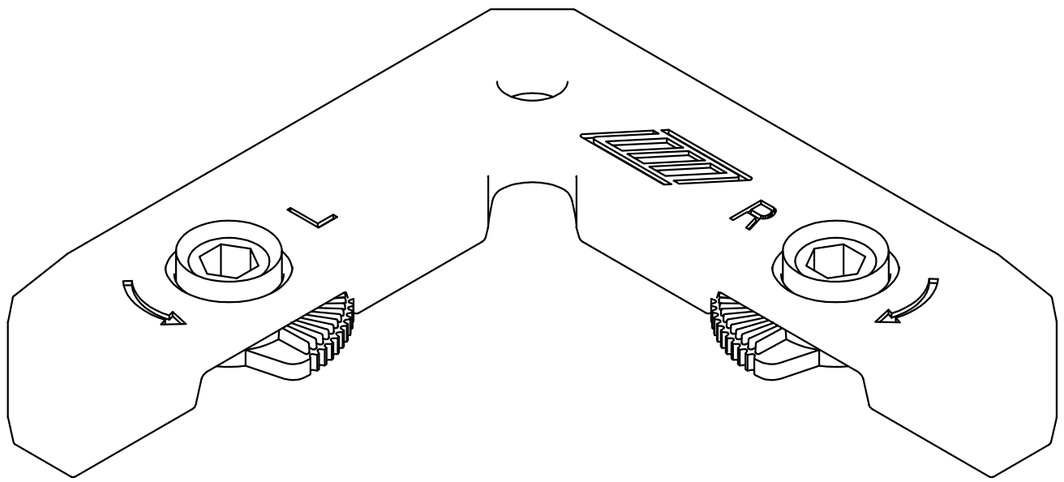

EF010
EF011
EF019
EF110
EF020
EF023
EF424
EF425

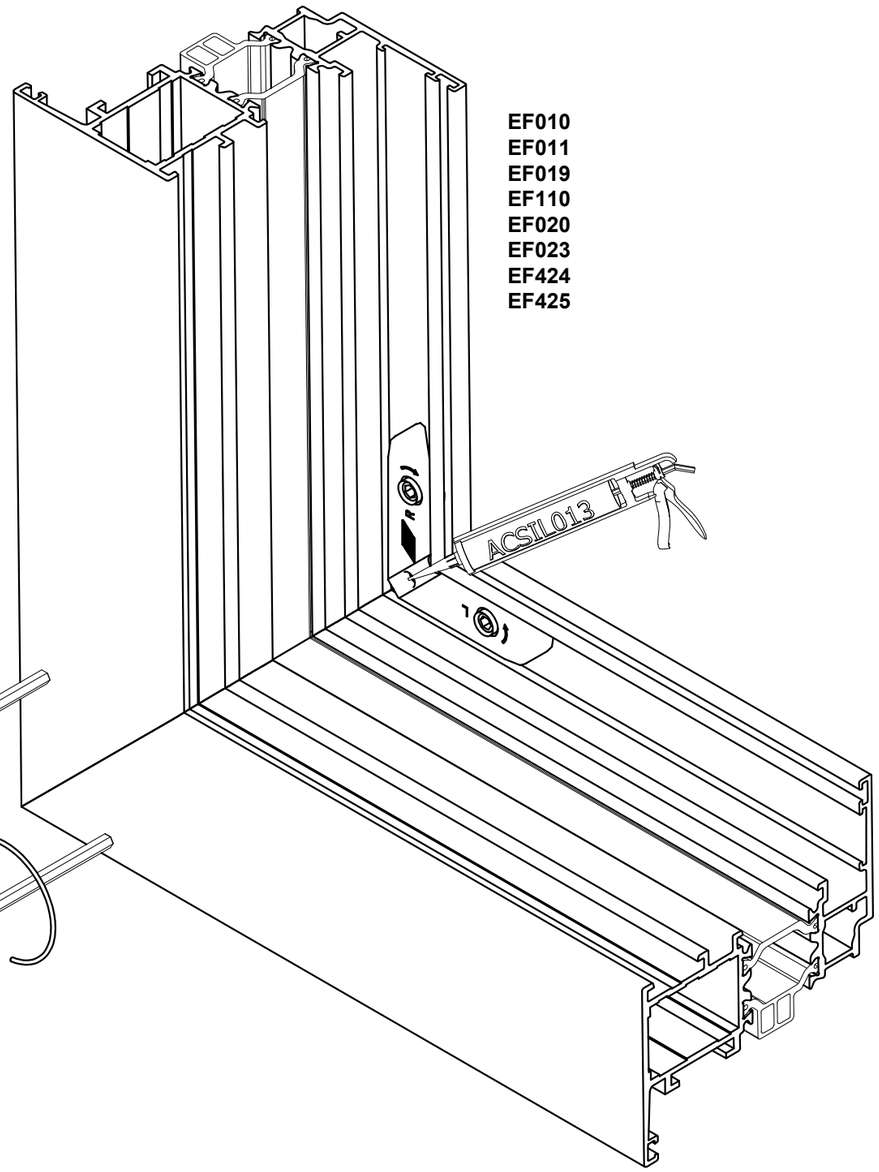

ACVG66

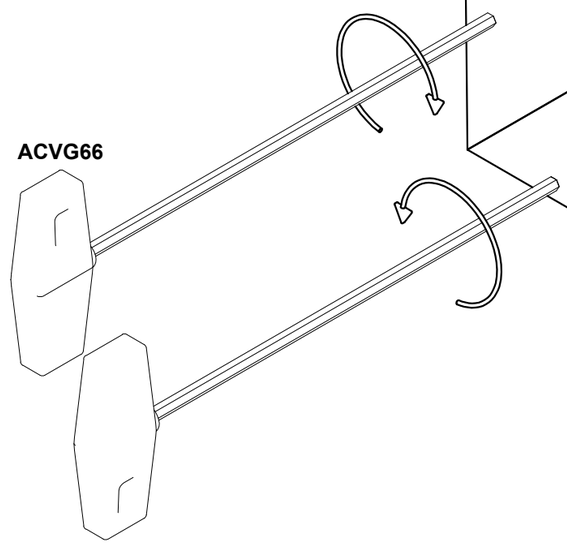

Do Not Scale From This Drawing

Variable Angle Cleats

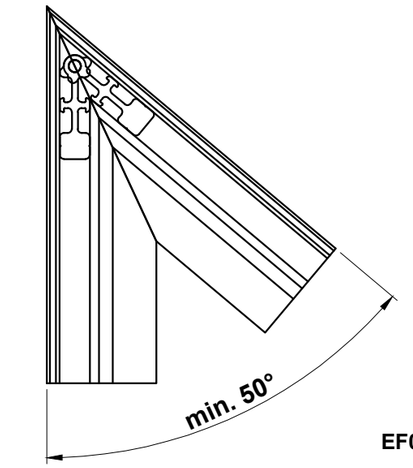

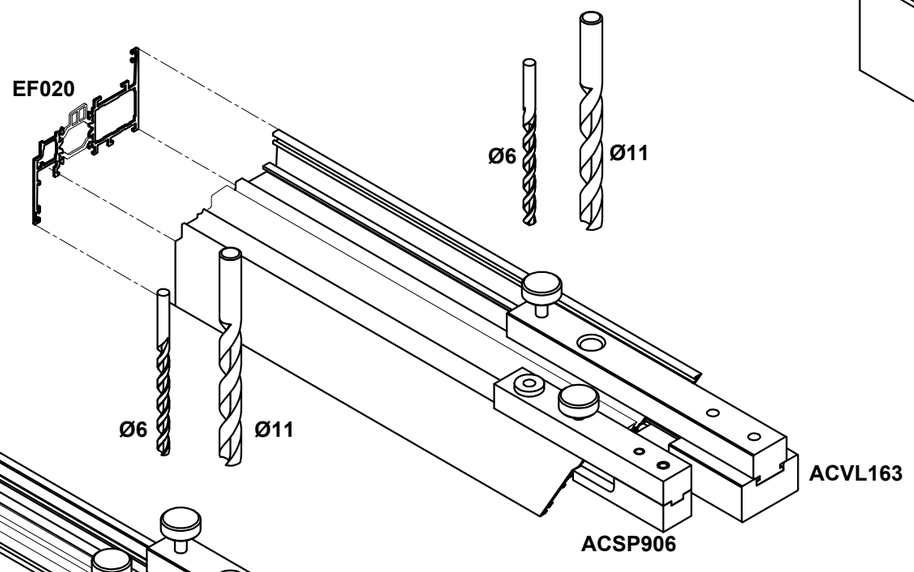

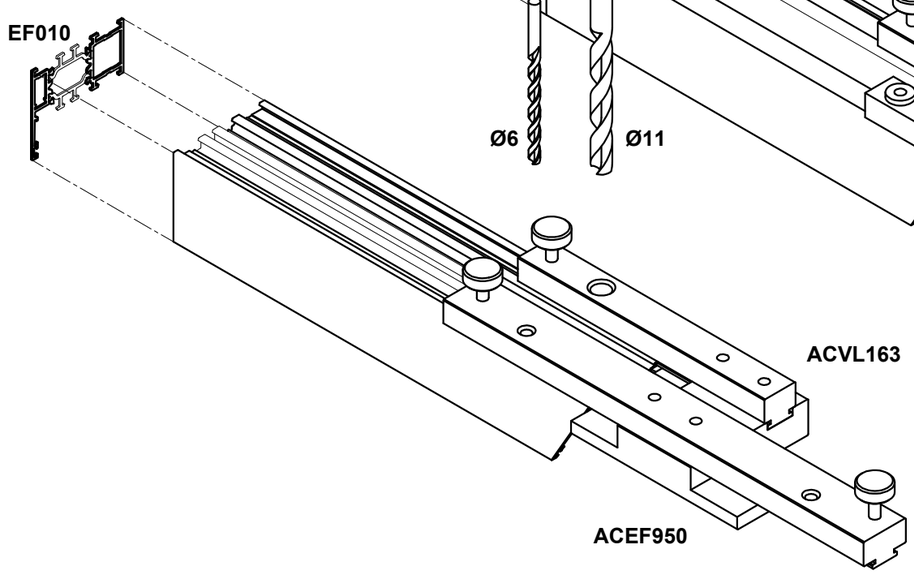

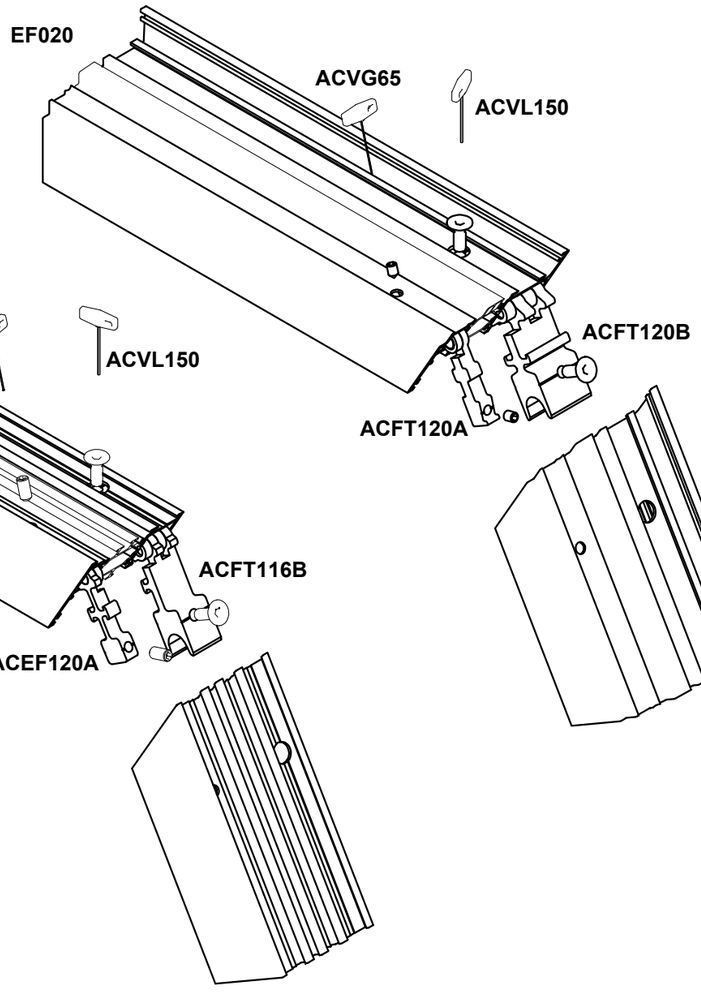

Do Not Scale From This Drawing

EF030 - EF010

Steps:
1. Degrease saw cut
2. Seal with ACSIL04
3. Glue with ACSIL013 (in chambers)
4. Secure cleat using ACVL150

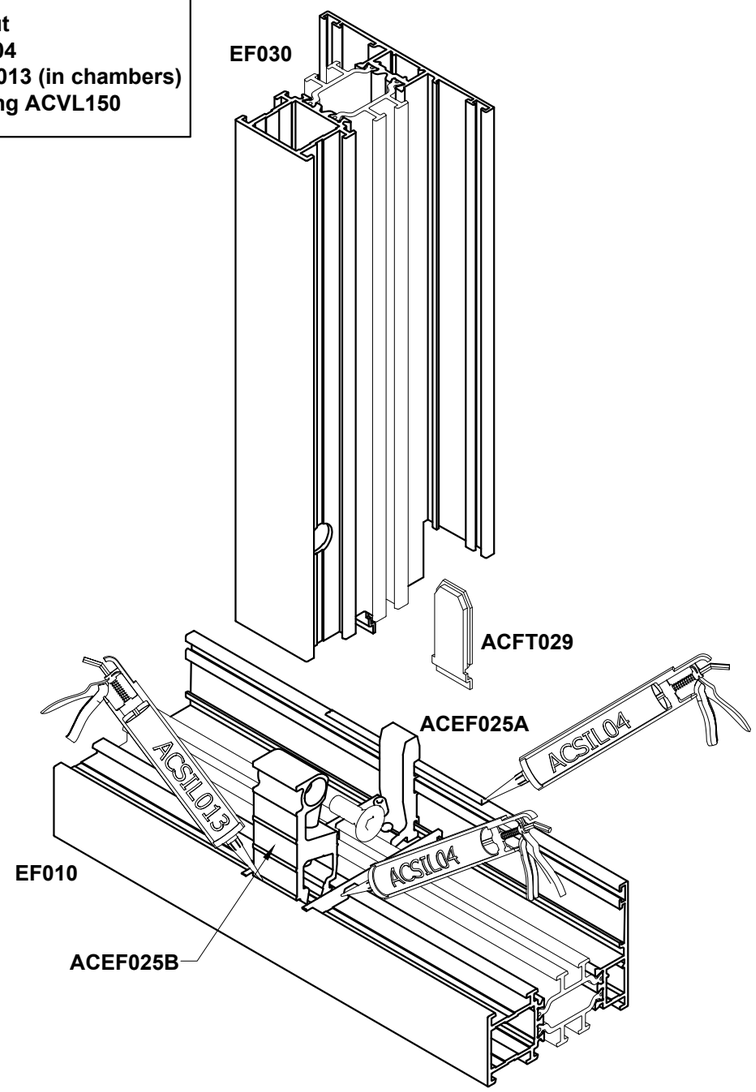

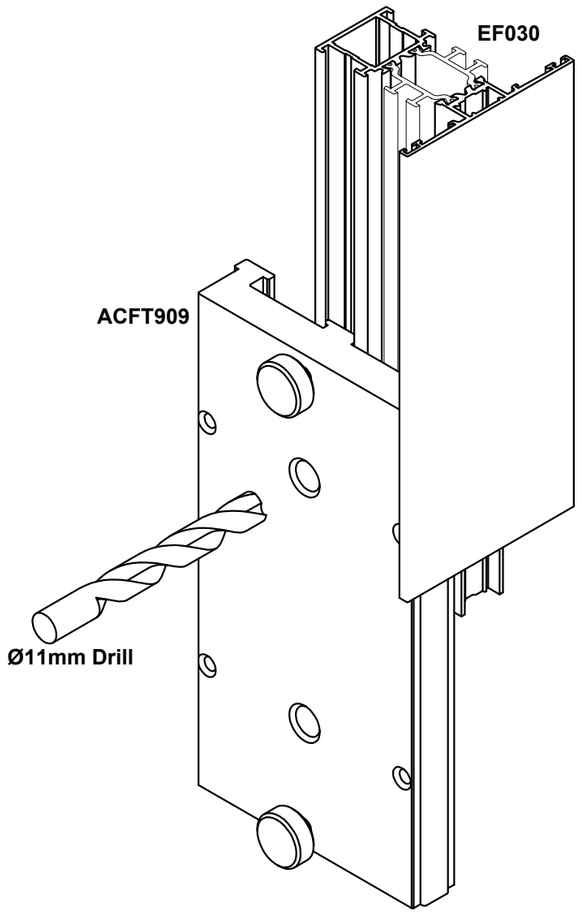

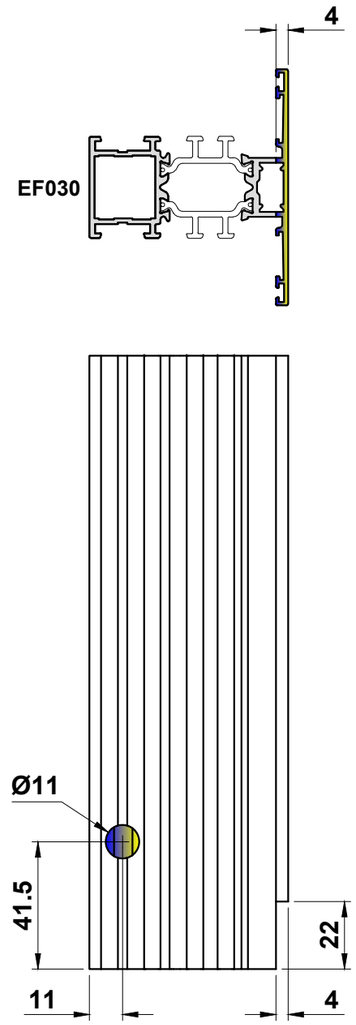

Do Not Scale From This Drawing

EF035 - EF010

Steps:
1. Degrease saw cut
2. Seal with ACSIL04
3. Glue with ACSIL013 (in chambers)
4. Secure cleat using ACVL150

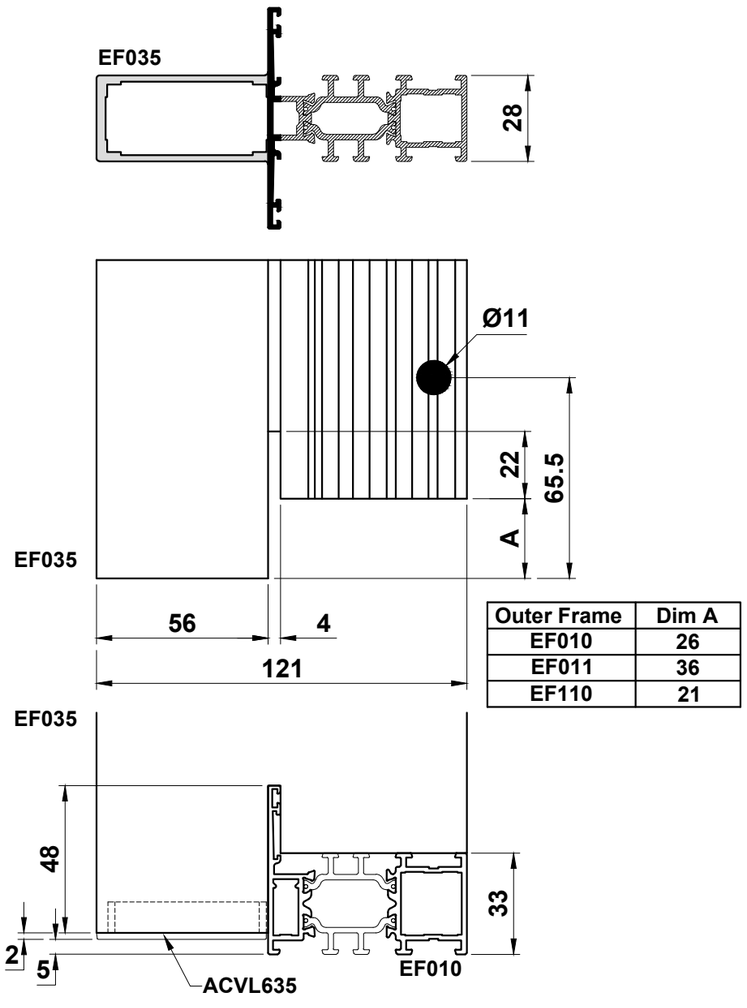

Outer Frame	Dim A
EF010	26
EF011	36
EF110	21

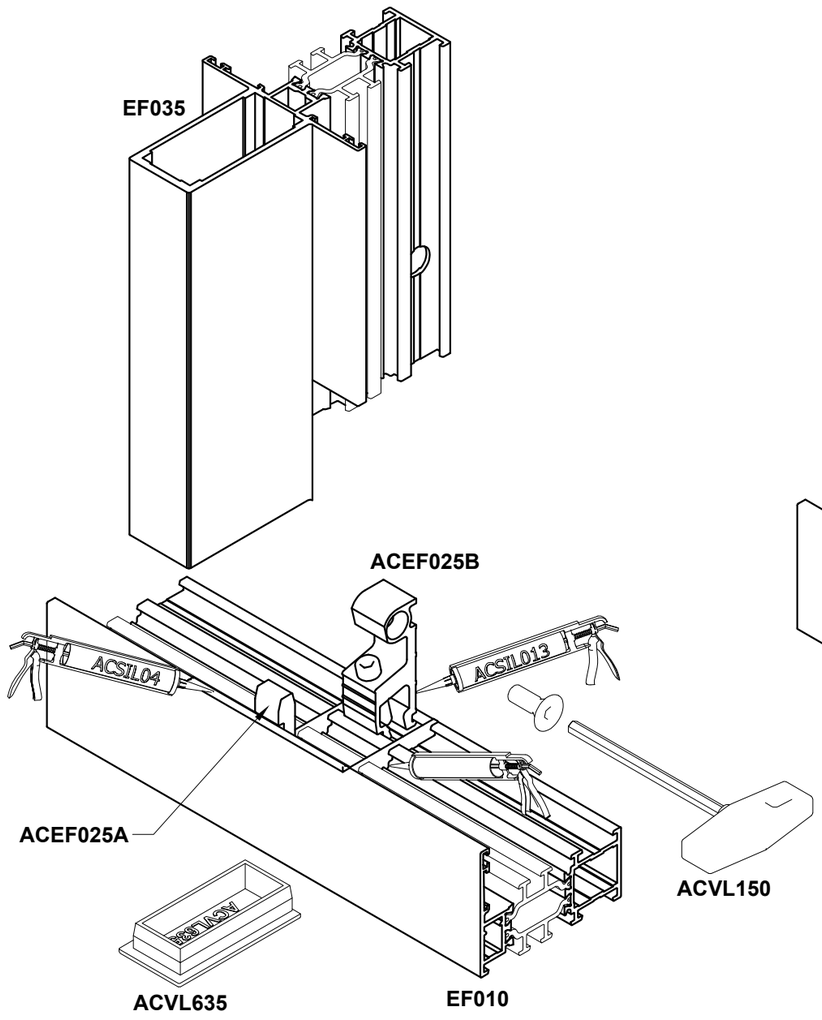

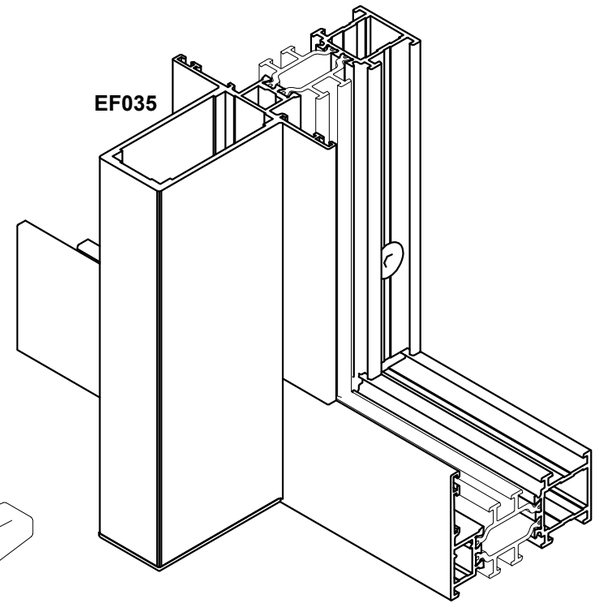

Do Not Scale From This Drawing

EF036 - EF010

Steps:
1. Degrease saw cut
2. Seal with ACSIL04
3. Glue with ACSIL013 (in chambers)
4. Secure cleat using ACVL150

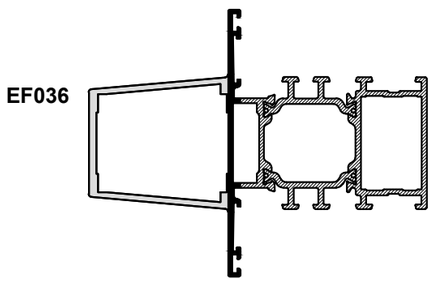

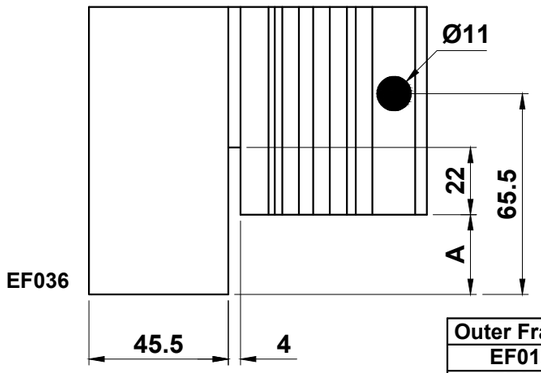

Outer Frame	Dim A
EF010	26
EF011	36
EF110	21

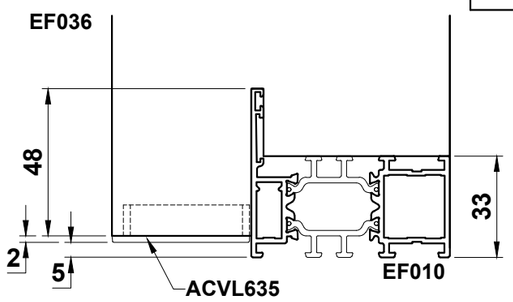

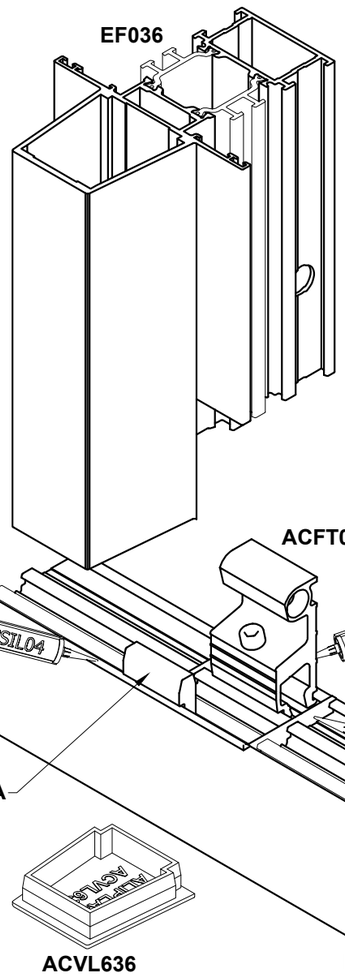

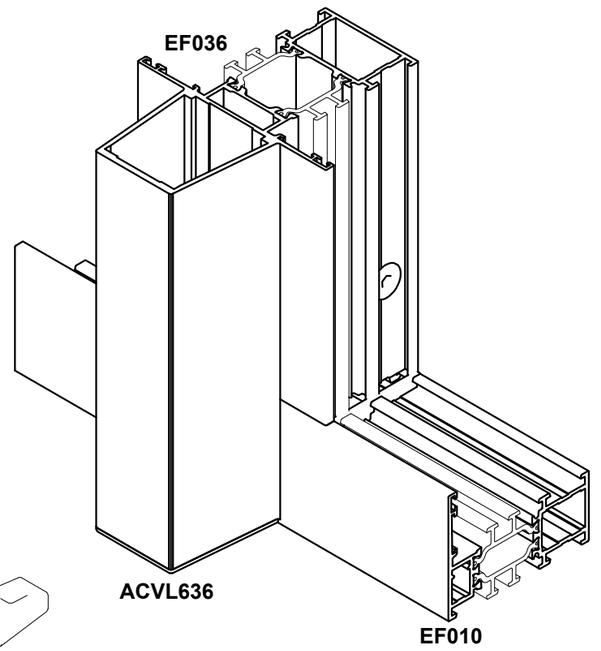

Do Not Scale From This Drawing

Tilt & Turn Limits

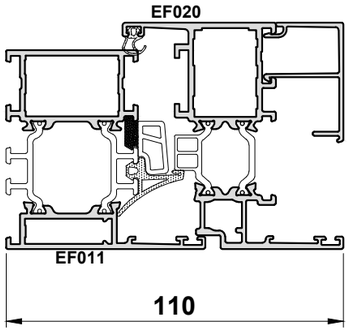

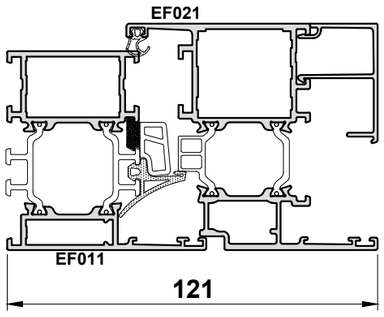

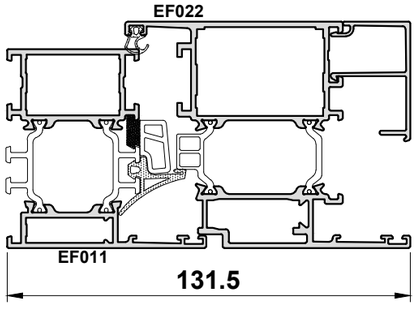

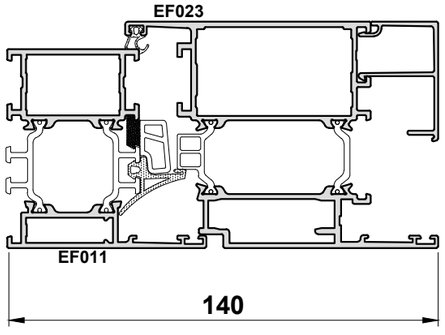

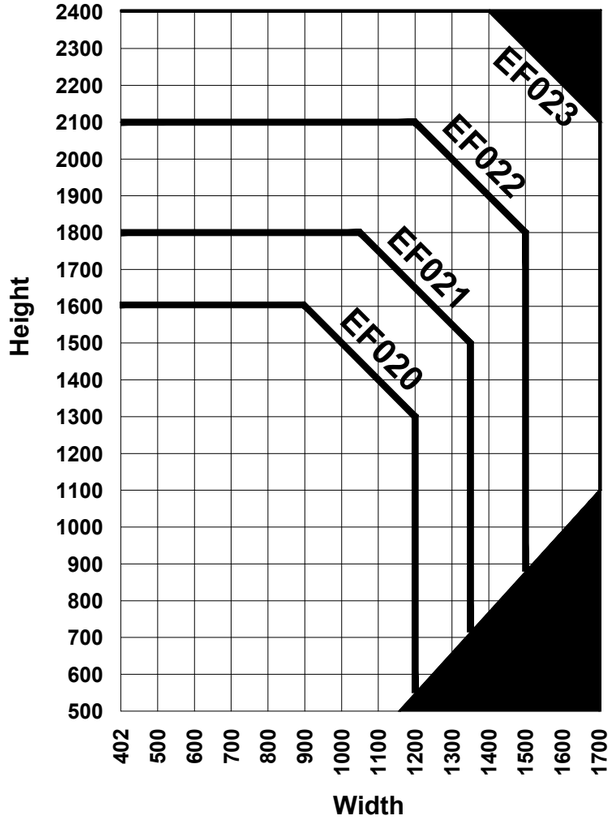

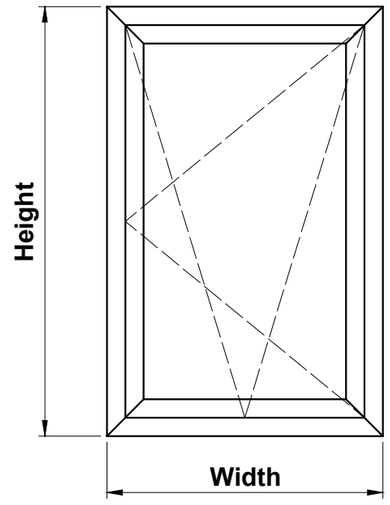

Important Notes:

1. **The size limitations of the chosen tilt & turn hardware must be adhered to**
2. **The width of the sash cannot be more than 1.5 times the height**
3. **Maximum sash weight = 90kg.**

■ **Hatched area indicates it is not possible to make tilt & turn at this size.**

Do Not Scale From This Drawing

Tilt & Turn Handle & Drainage Preparation

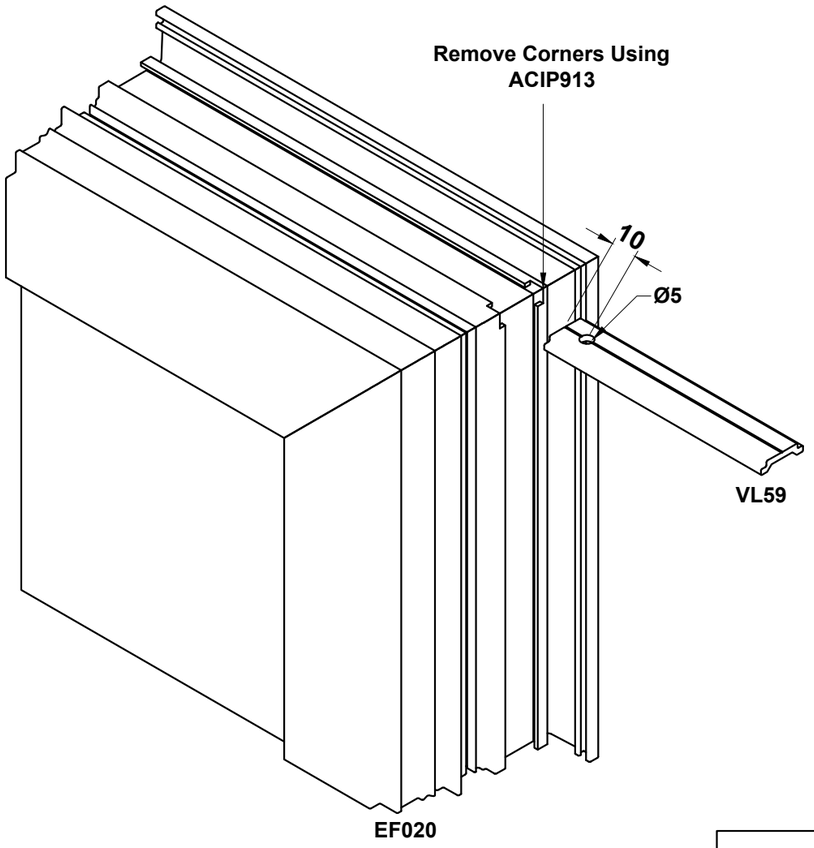

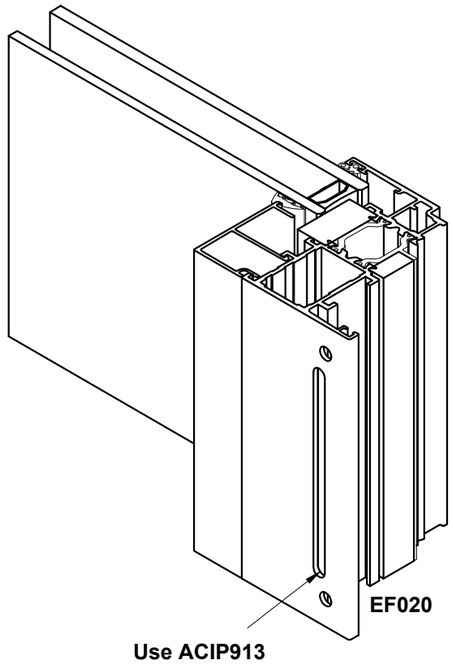

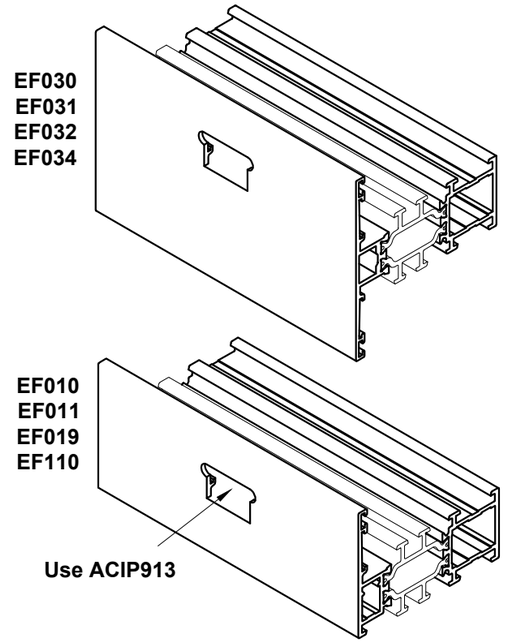

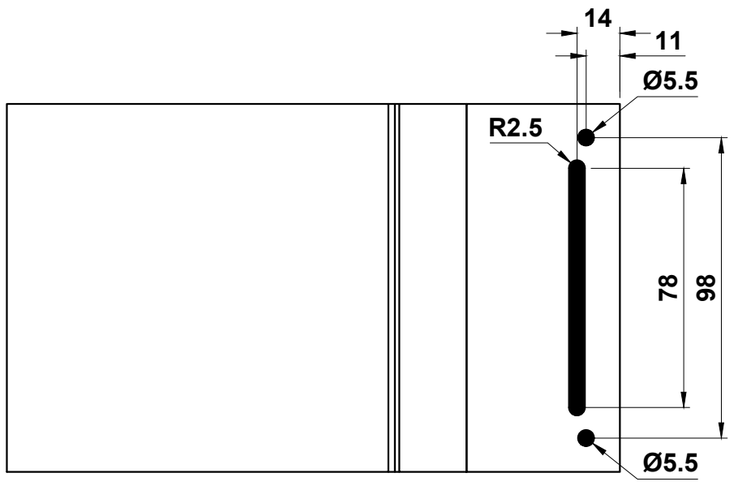

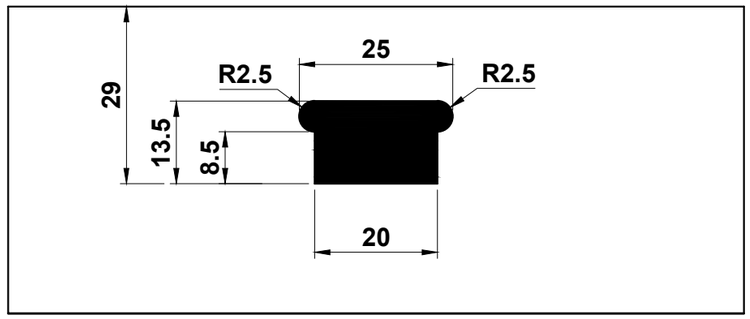

Detail to accept ACVL045 drainage cover cap

Do Not Scale From This Drawing

Drainage Details

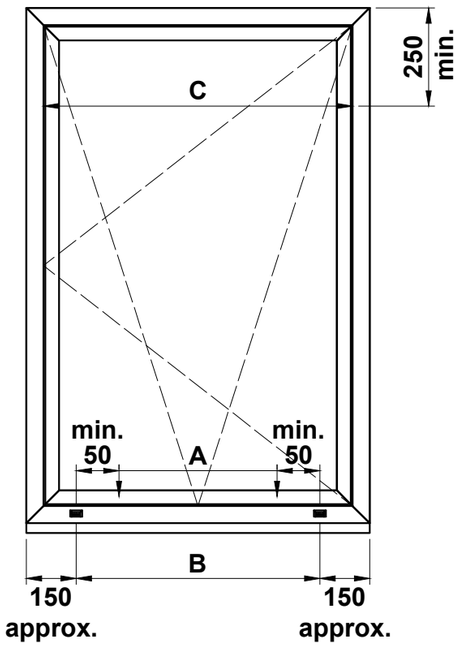

A: Vent Drainage = 2 x Ø8

B1: Outer Frame Drainage = 2 x

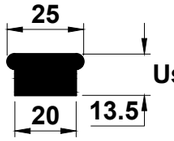

Use ACIP913

B2: Outer Frame Drainage = 2 x Ø8

C: Sash Ventilation Holes = 2 x Ø8

Important Note: All exposed aluminium should be coated using ACSIL014 or painted to match the frame.

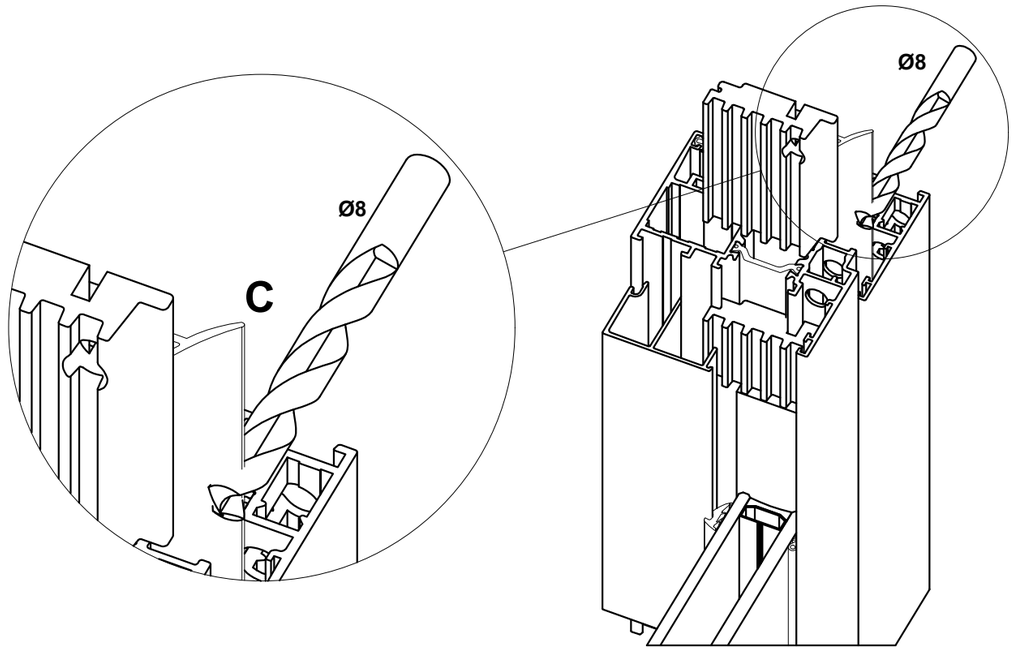

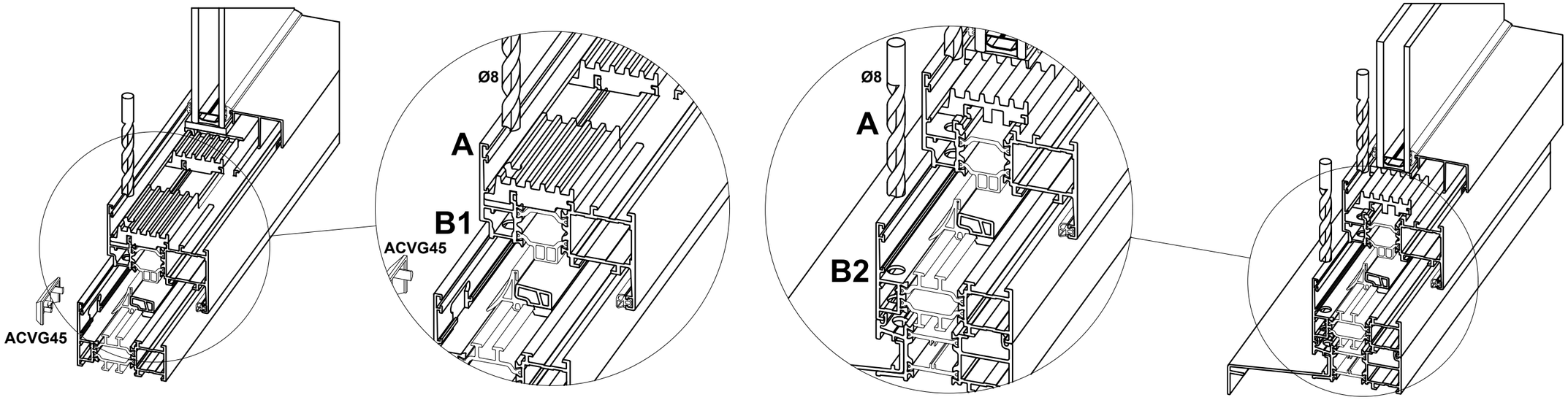

See page E20 for sub-cill drainage details

Do Not Scale From This Drawing

EF040 & ACEF055 Preparation

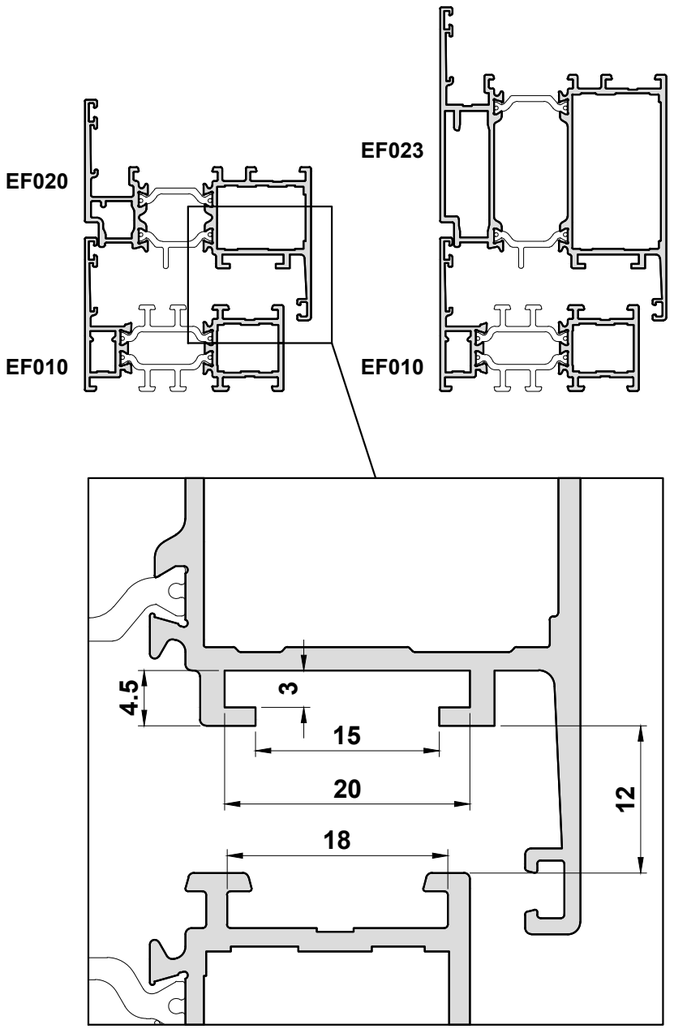

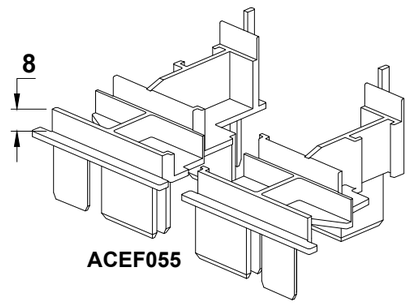

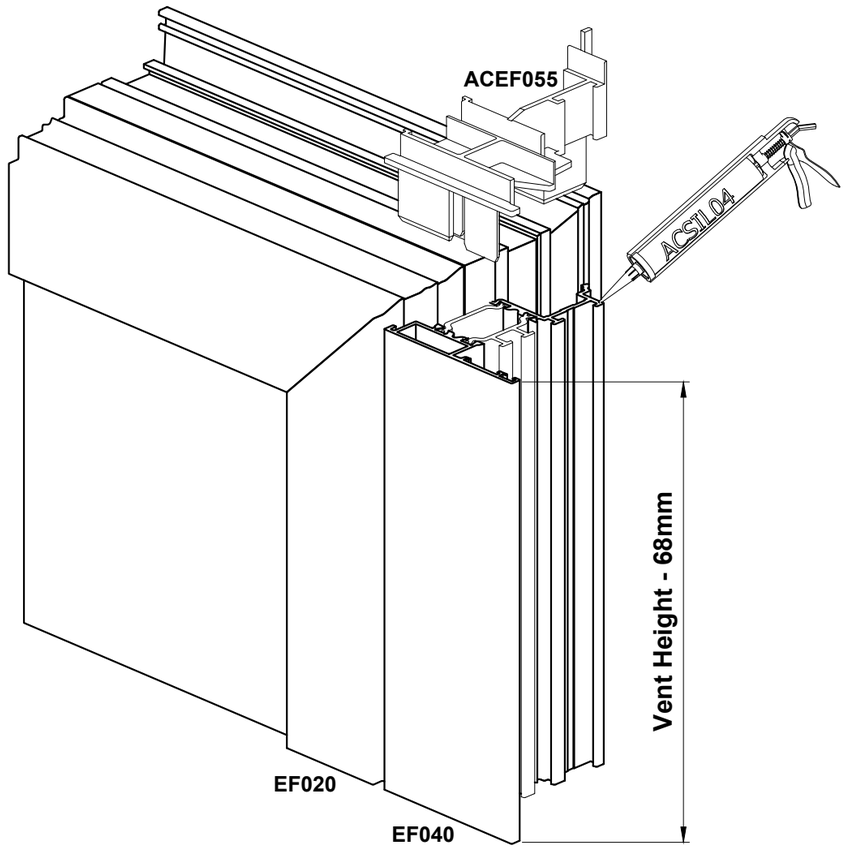

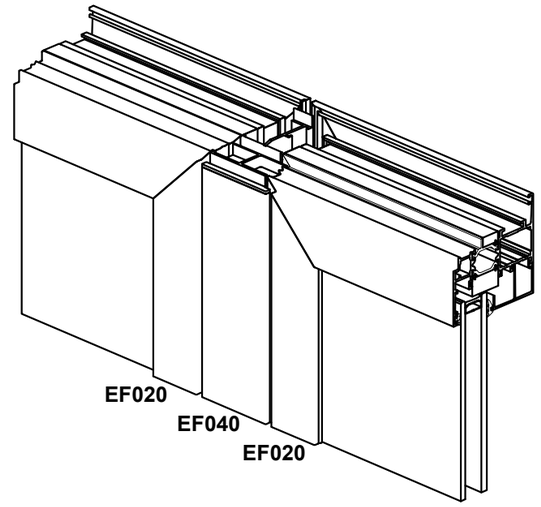

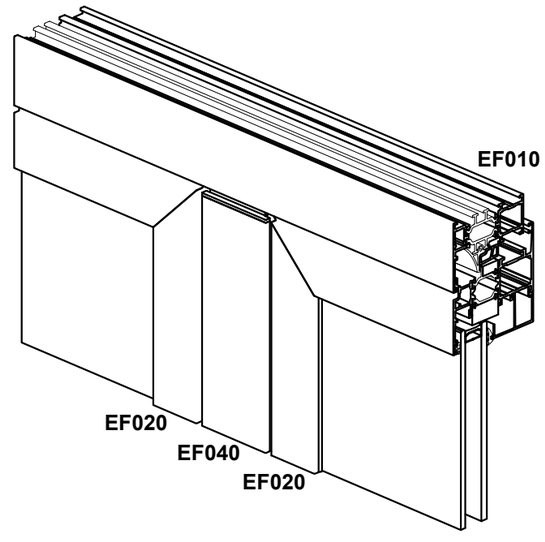

Do Not Scale From This Drawing

Pivot Window Overview

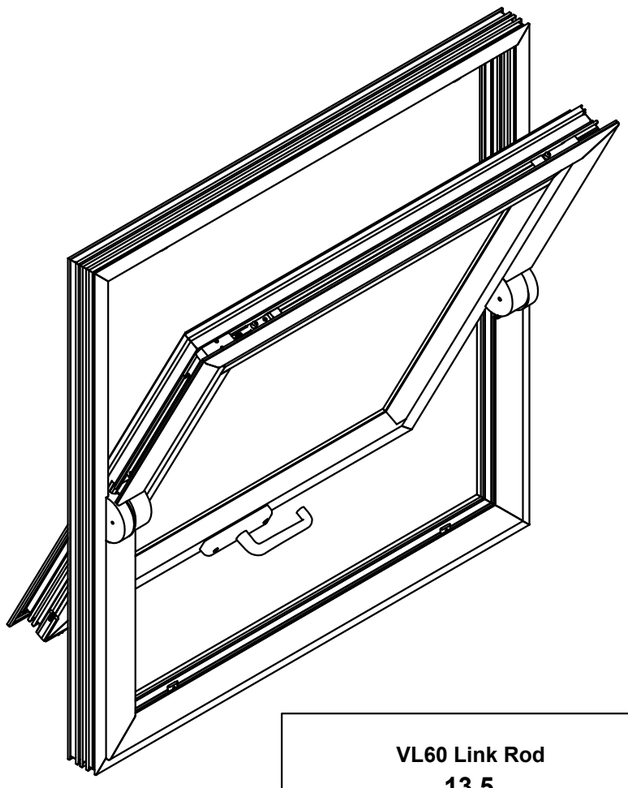

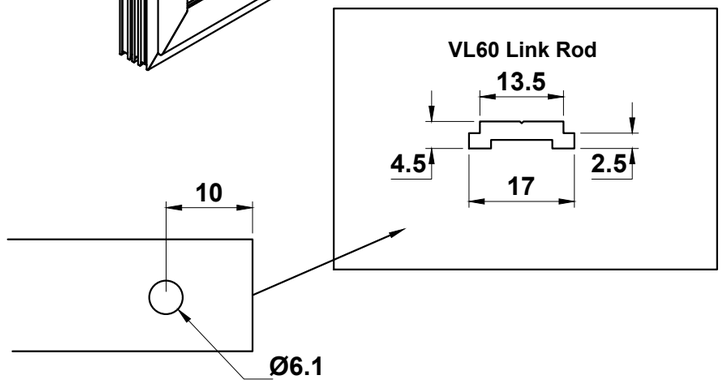

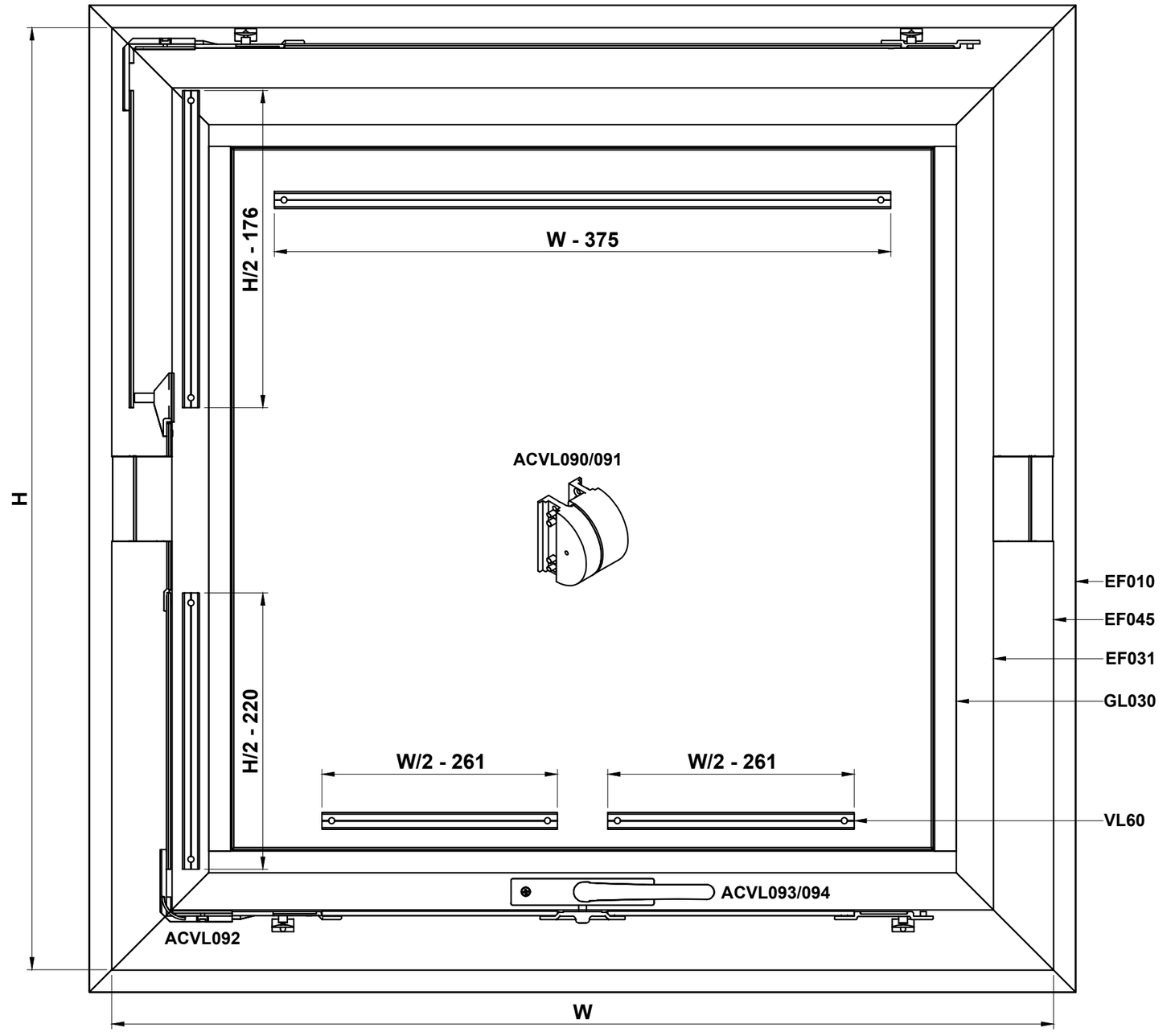

Do Not Scale From This Drawing

Pivot Window EF045 Preparation

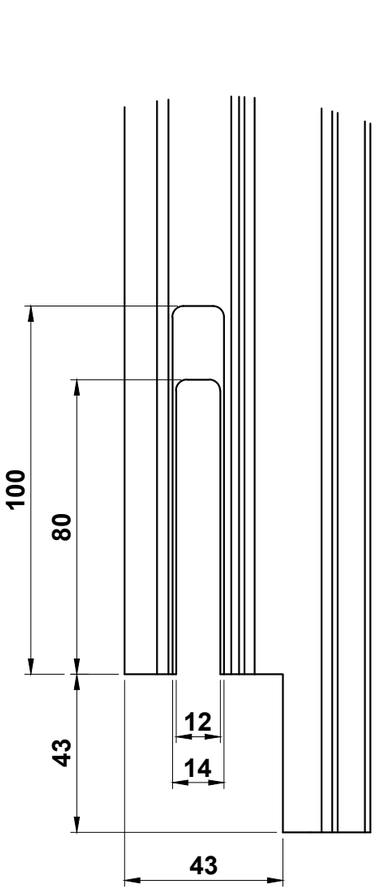

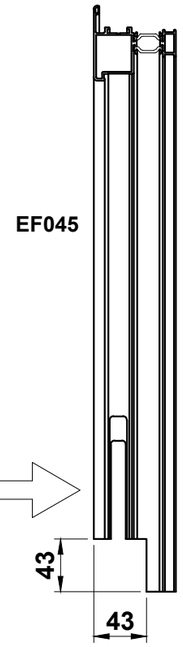



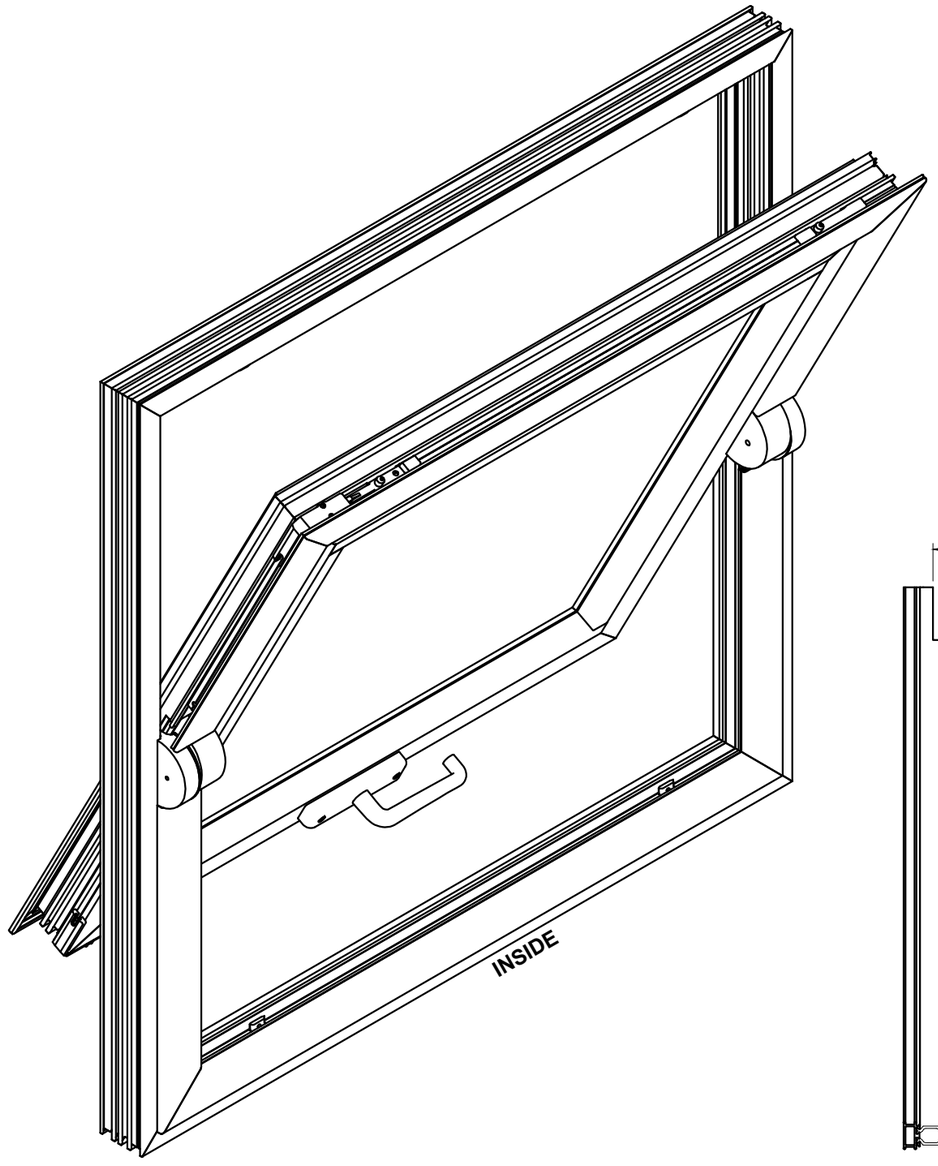

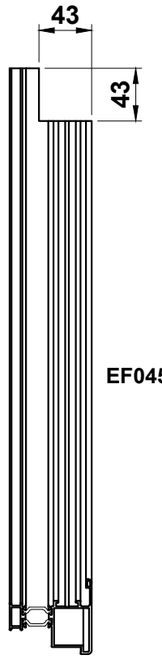



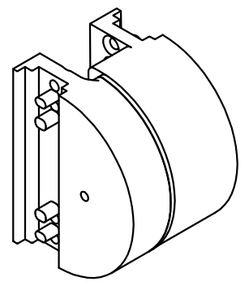

ACVL090/091

Do Not Scale From This Drawing

ACVL093 Preparation

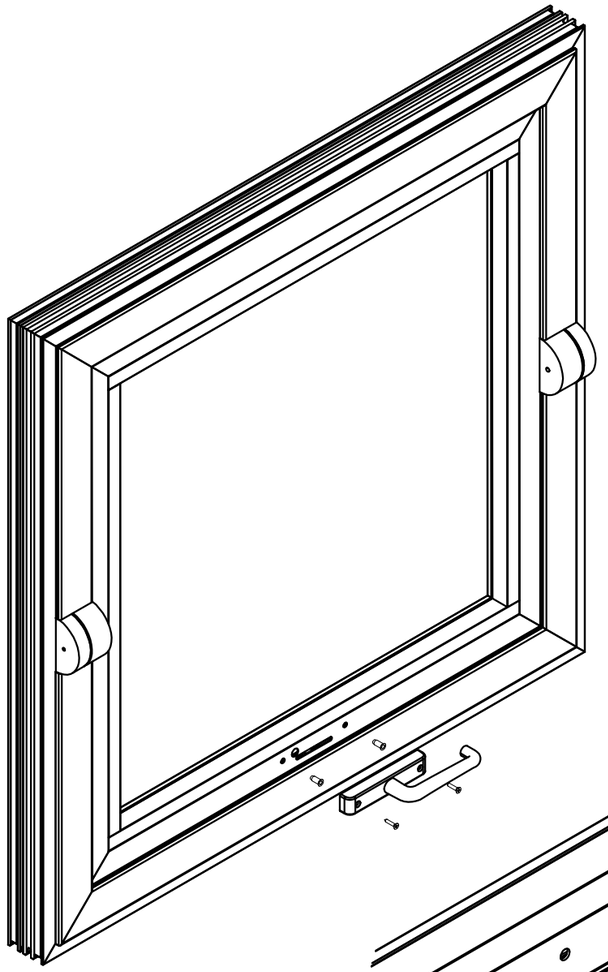

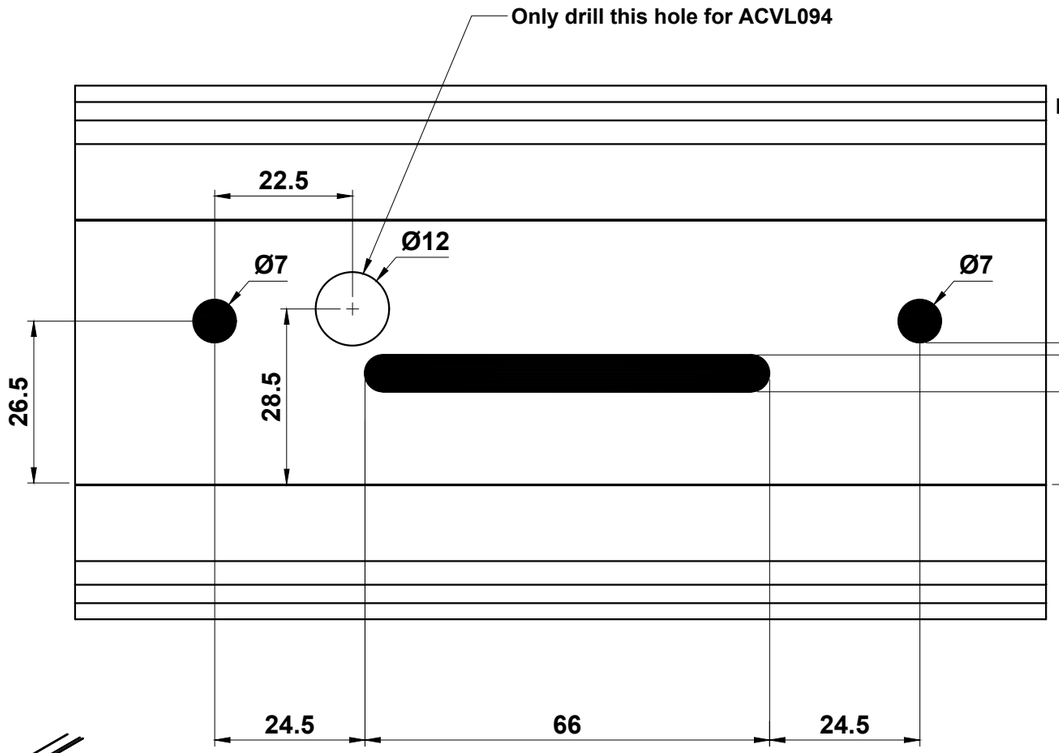

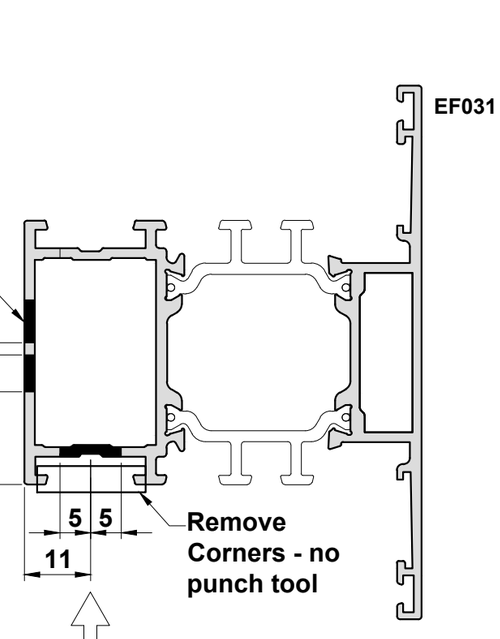

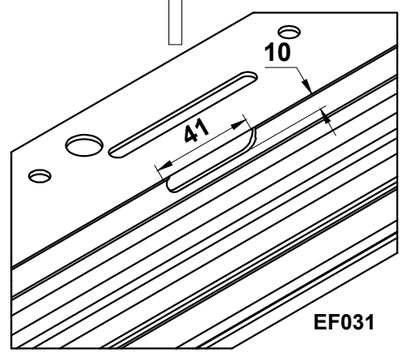

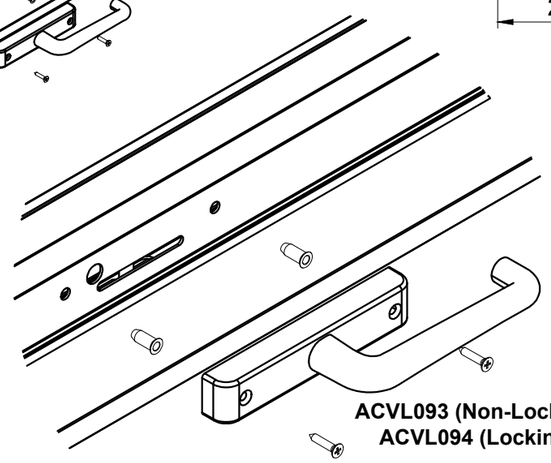

ACVL093 (Non-Locking)
ACVL094 (Locking)

Do Not Scale From This Drawing

ACVL090 - ACVL091

Important Note:
Consider internal plaster depth where a restricted pivot hinge is required. A deeper outer frame or frame extension may be necessary.

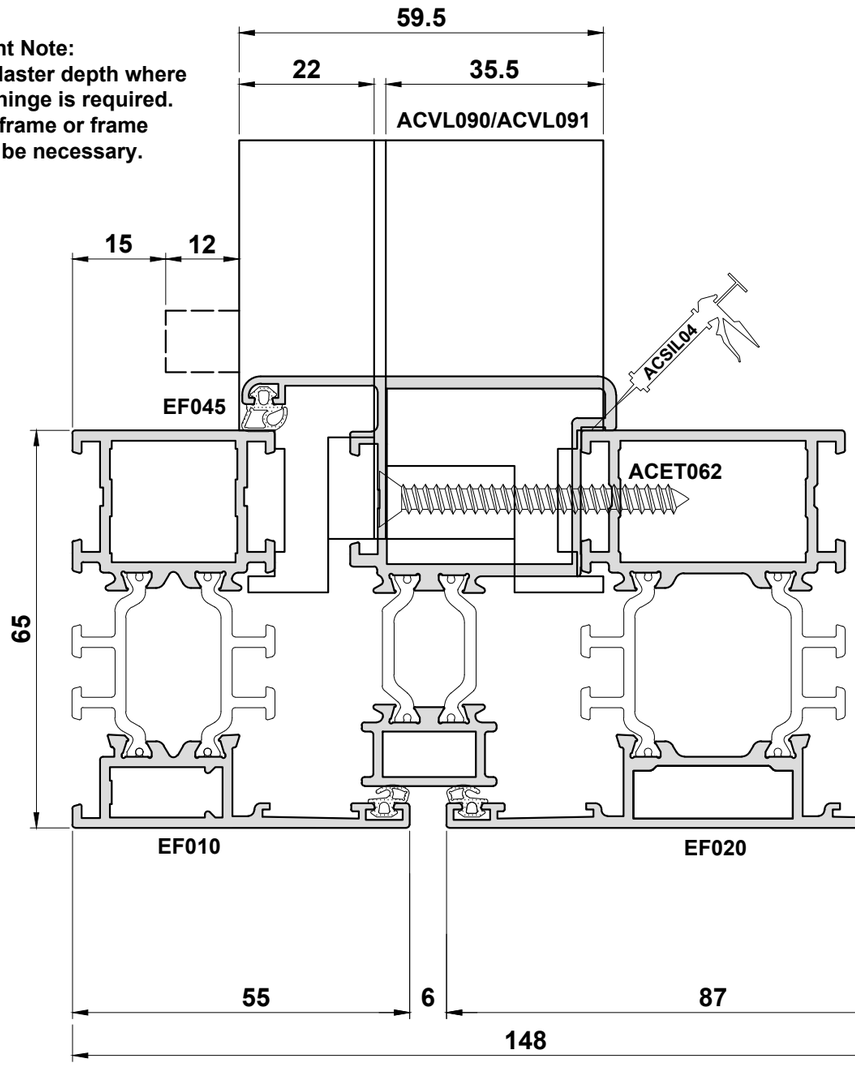

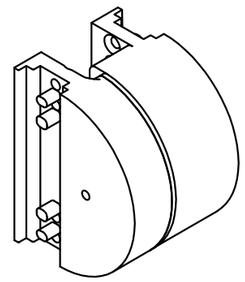

ACVL090/091

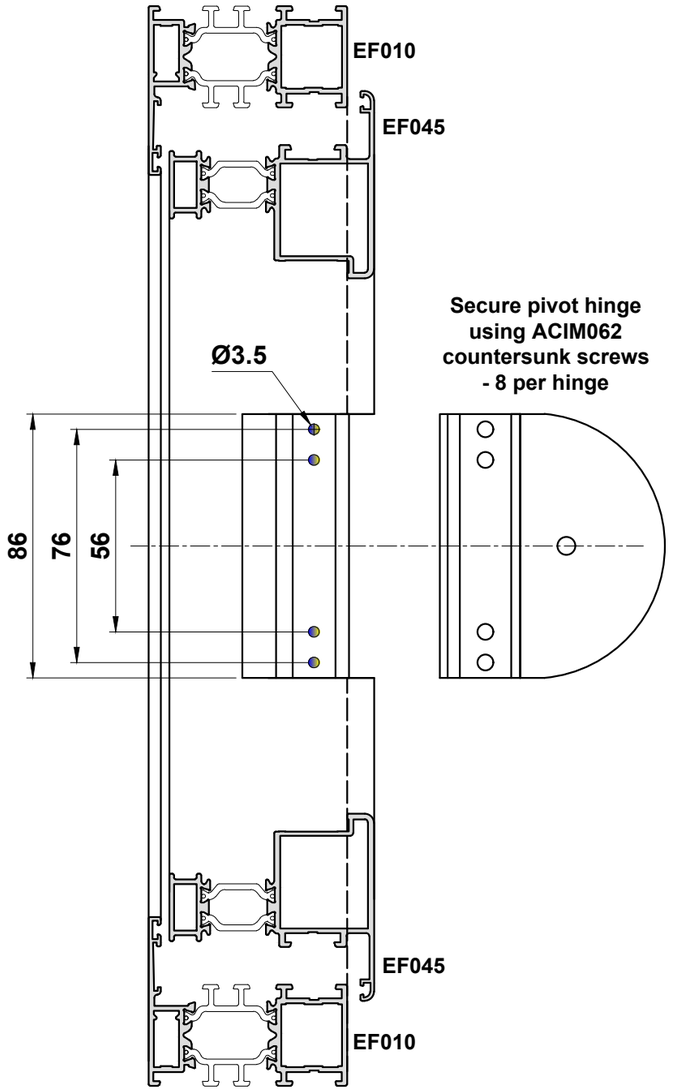

Do Not Scale From This Drawing

EF930 & EF932 Transom/Mullion Preparation

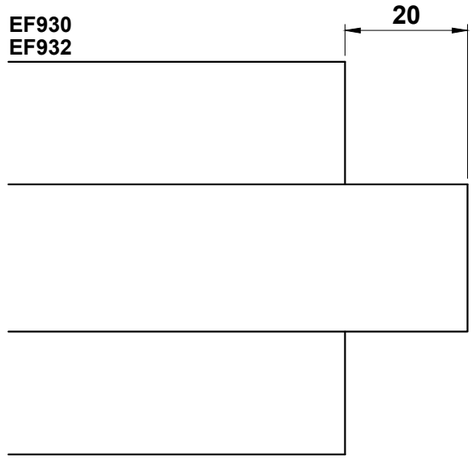

ACEF962N - Drill Jig
Note: Jig must be clamped in position
to avoid risk of injury.

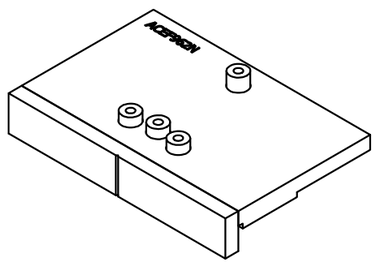

ACEF962N

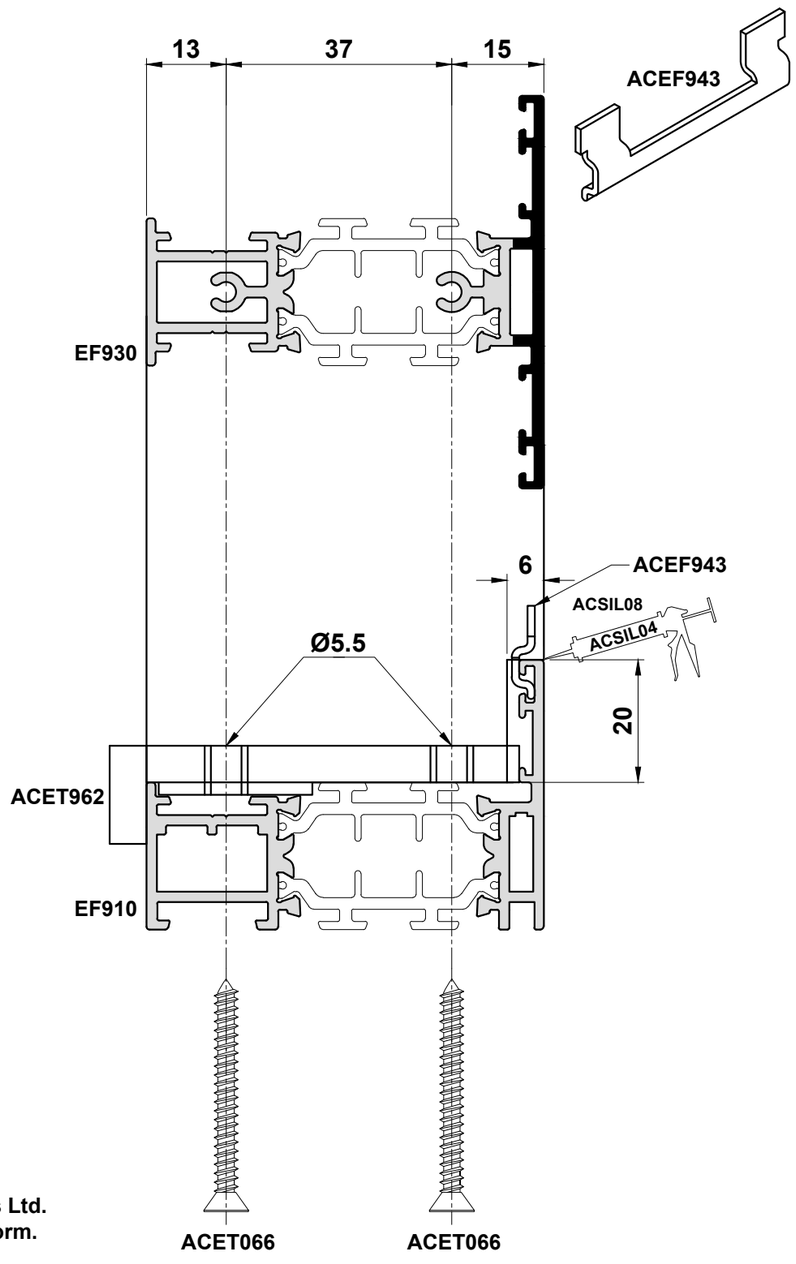

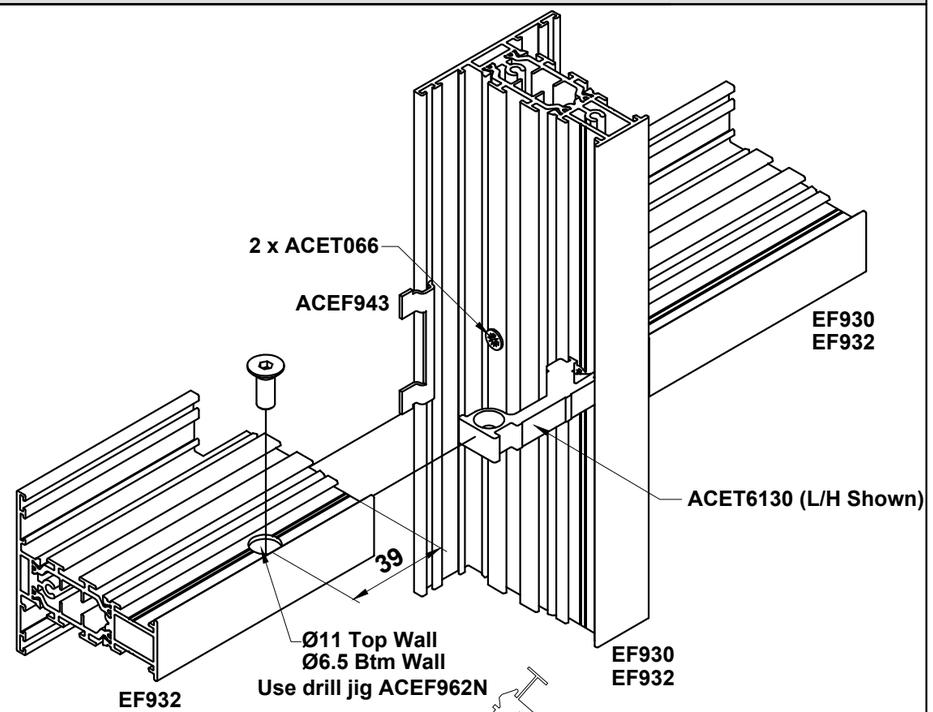

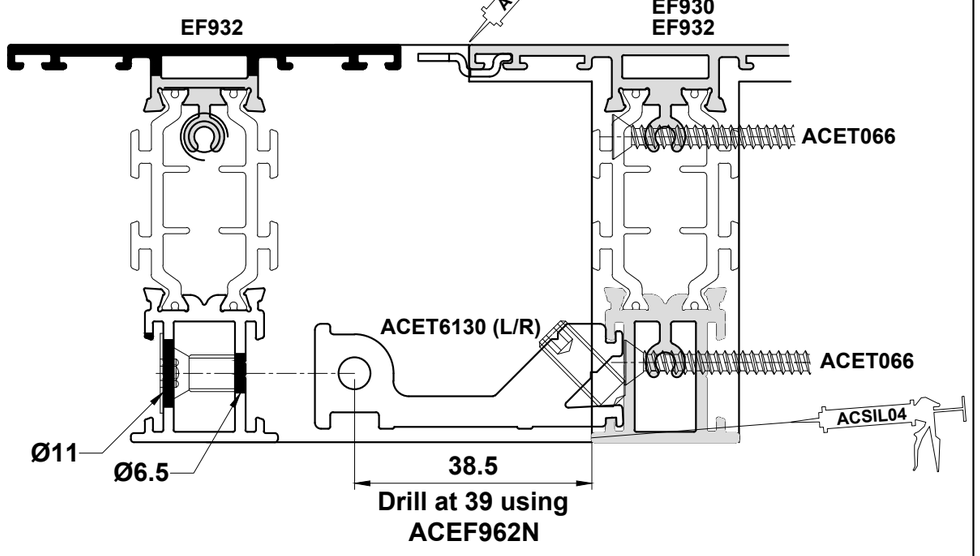

Note:
End mill cutters can be ordered through Smart Systems Ltd.
Please contact the Technical Department for an order form.
Standard delivery is 2-3 weeks approx.

Do Not Scale From This Drawing

Casement Drainage

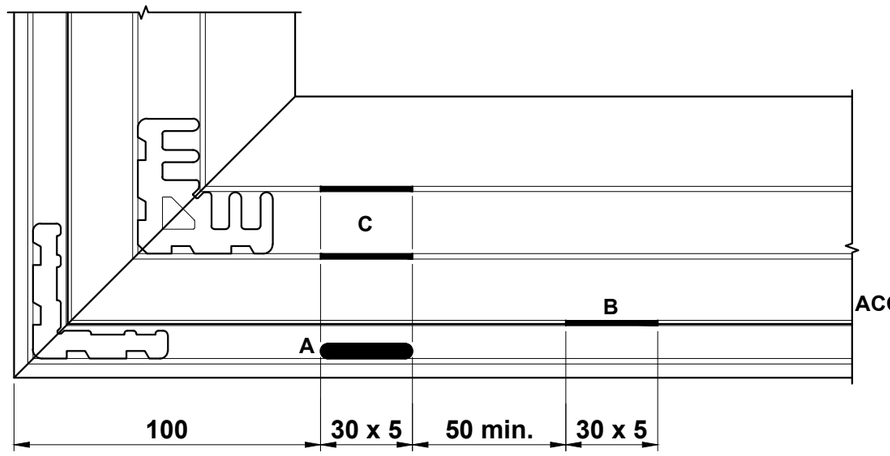

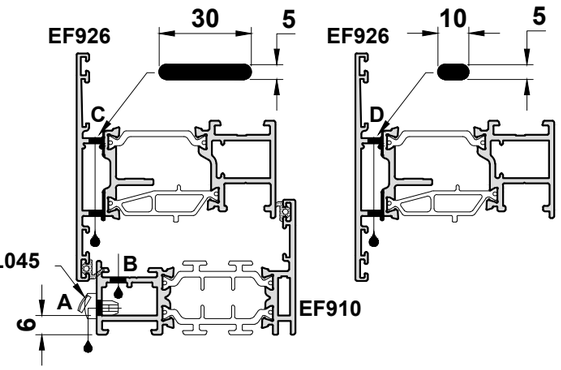

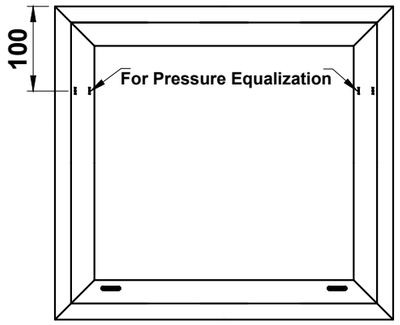

Alternative sash drainage path

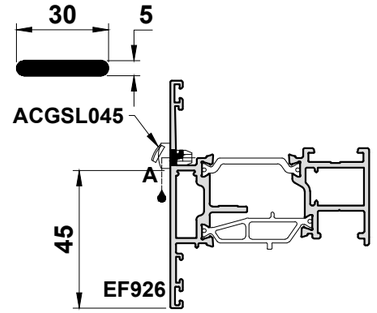

Important Note: All exposed aluminium should be coated using ACSIL014 or painted to match the frame.

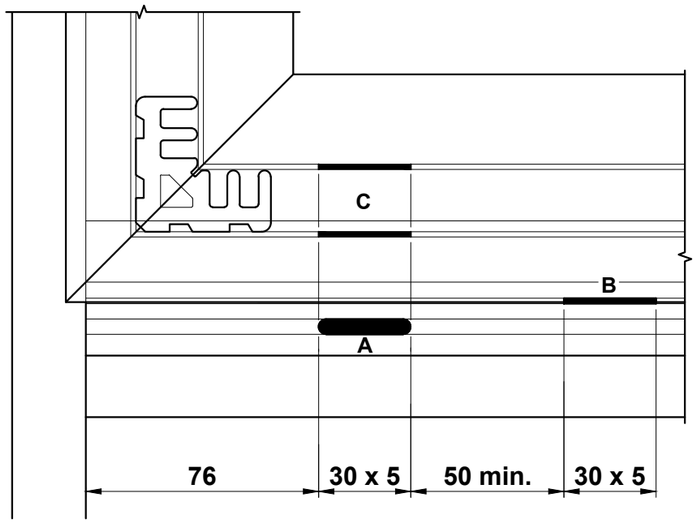

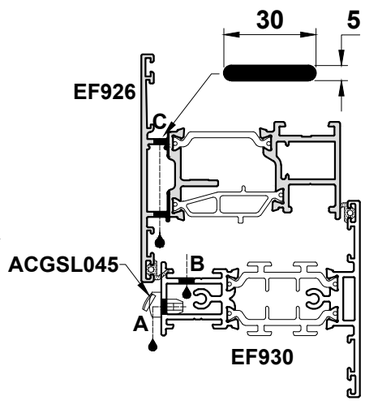

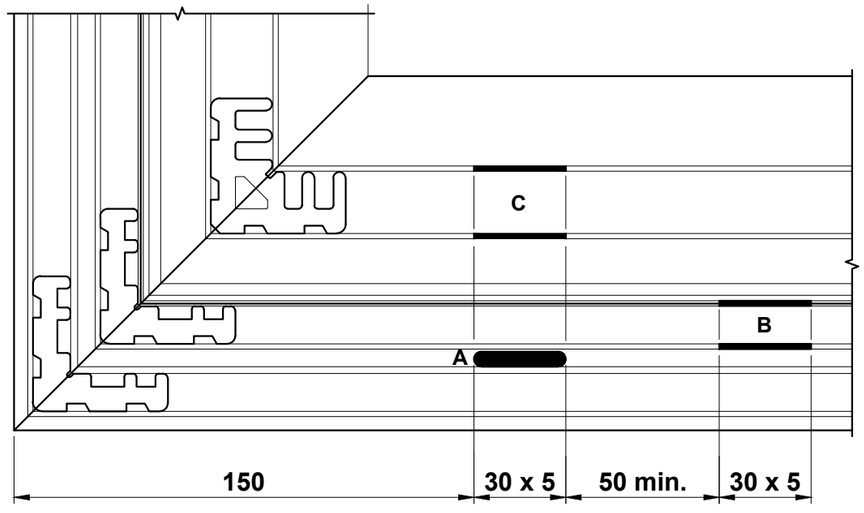

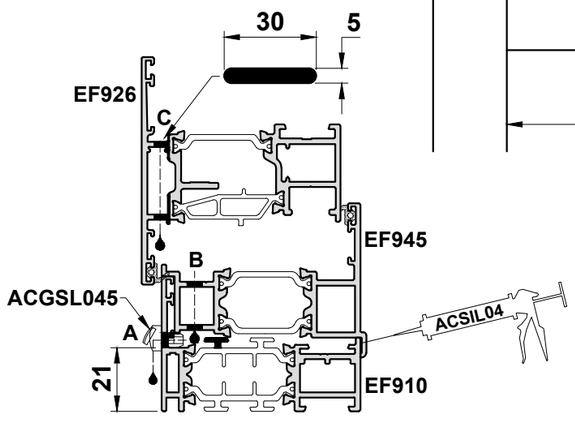

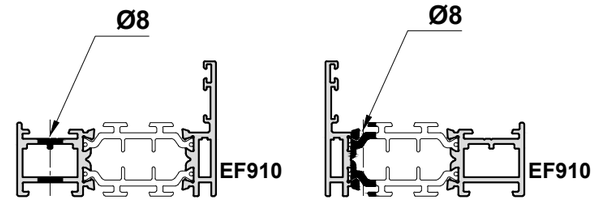

Optional drainage path when using cill

Do Not Scale From This Drawing

Sub Cill Drainage

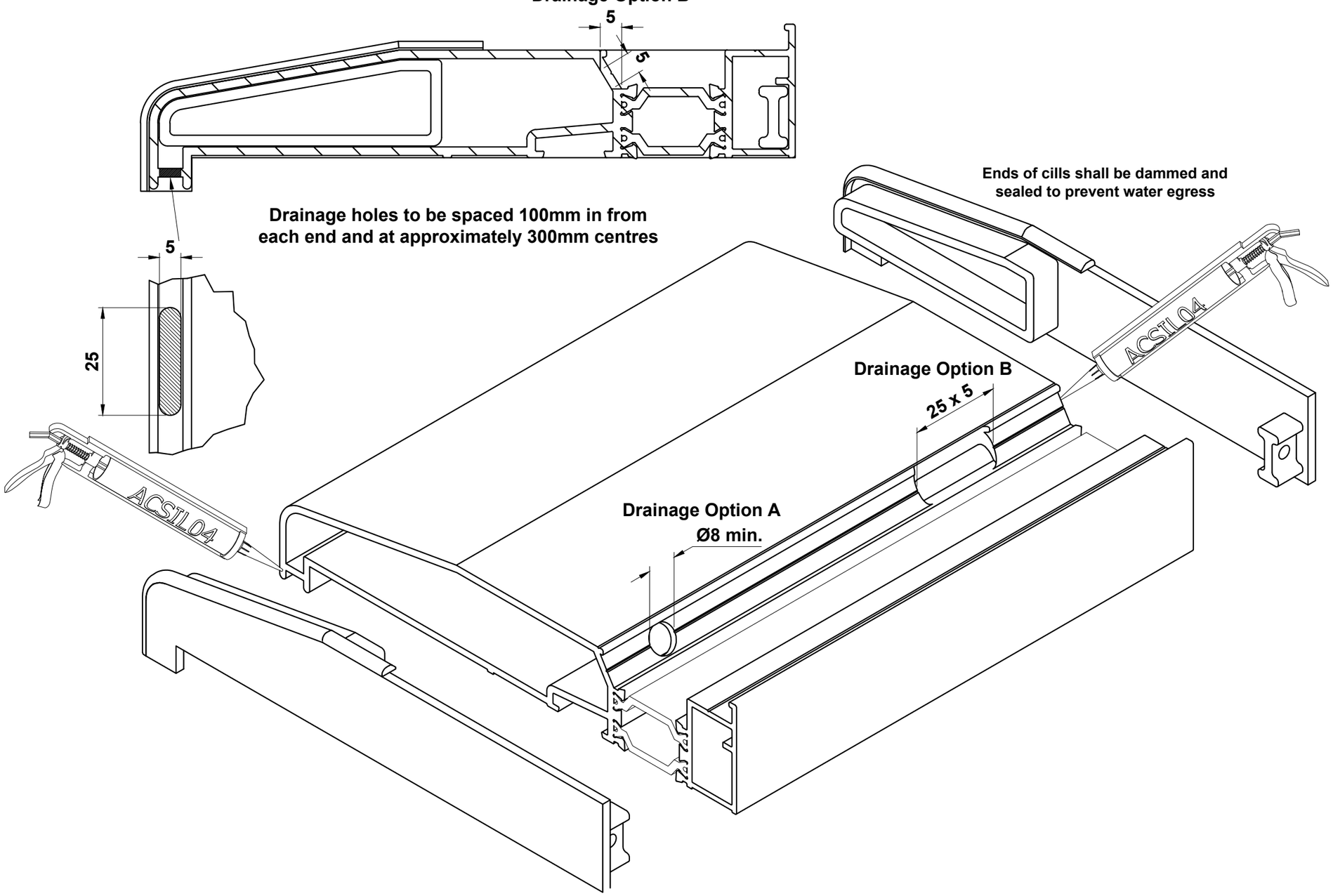

Do Not Scale From This Drawing

Angled Sub Cill

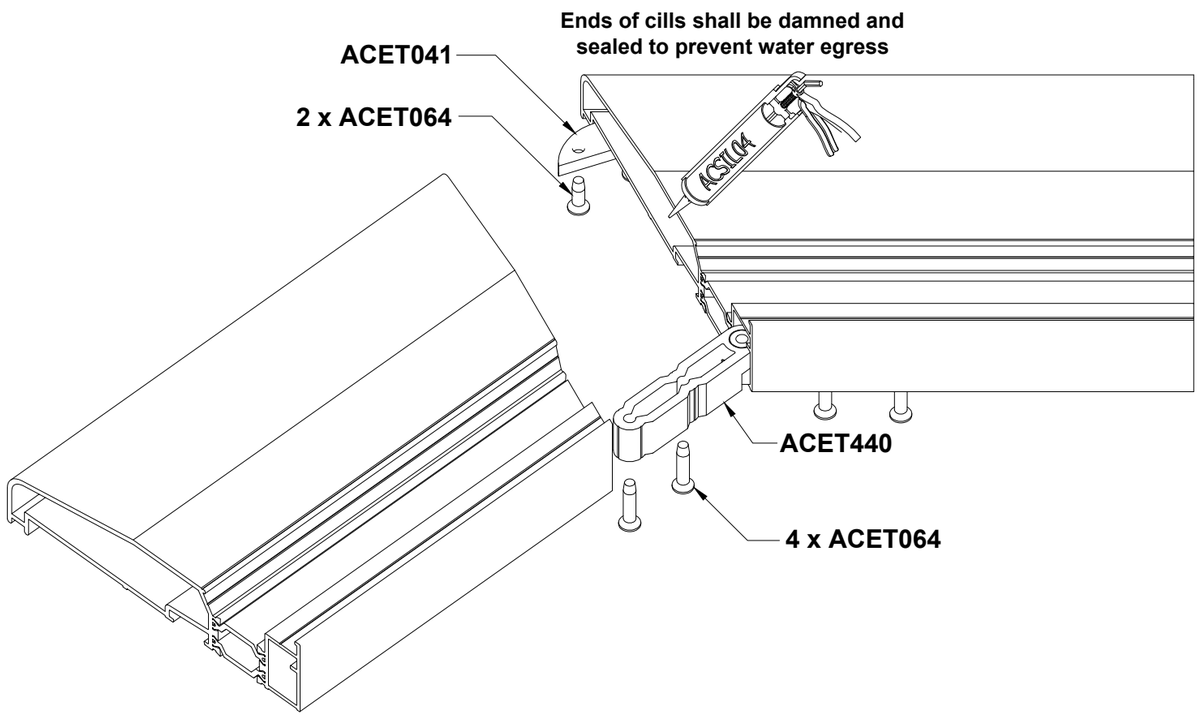

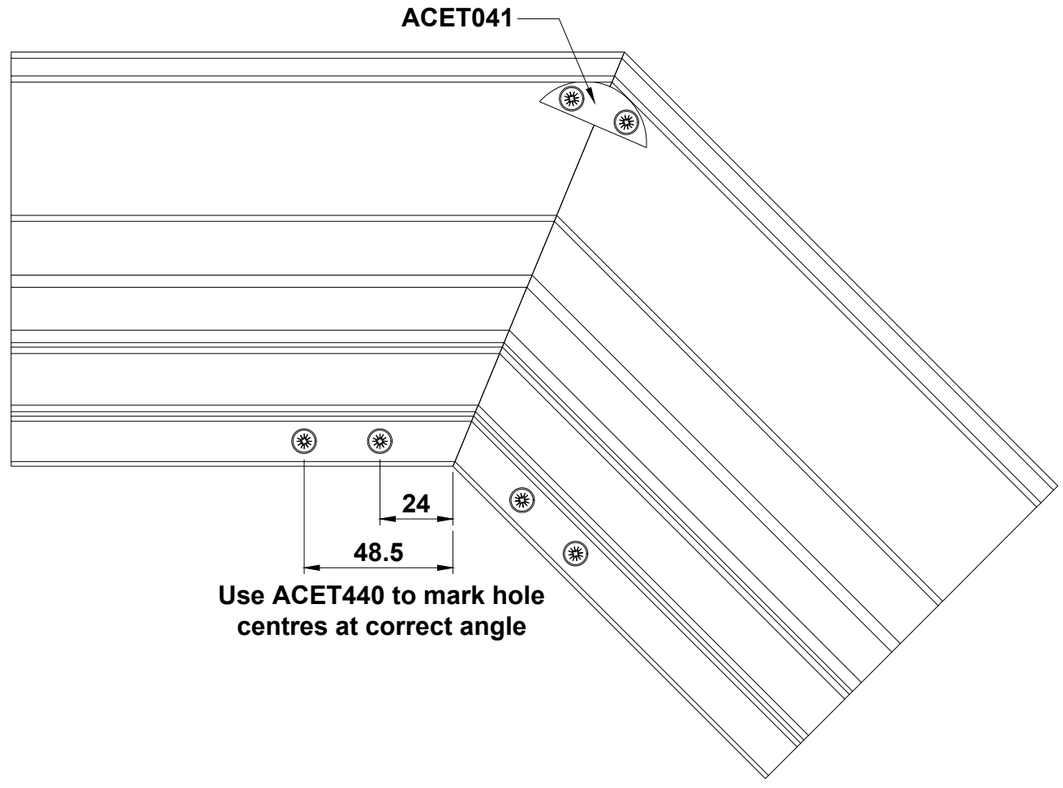

Do Not Scale From This Drawing

Friction Stay

Standard Stays
(Use drill jig ACEF990)

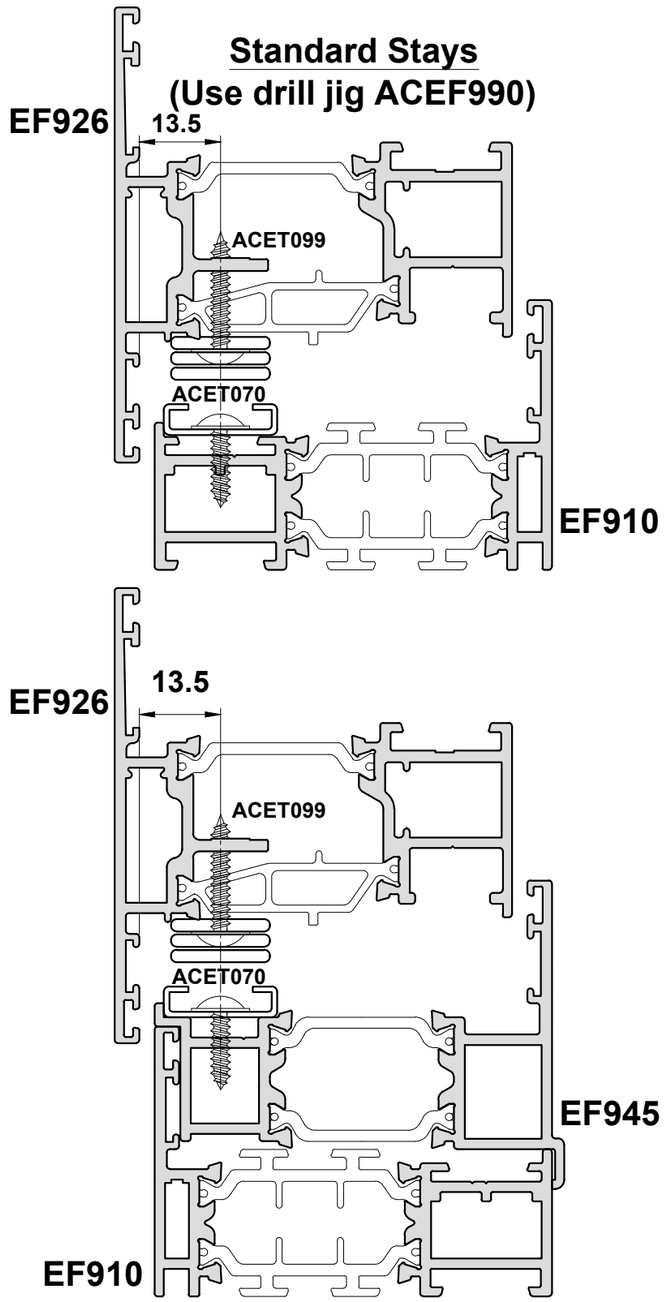

Vent Sizes 450mm or Smaller to be Reduced by 2mm

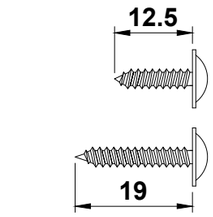

ACET070 = Recommended screw for fixing stay to outer frame

ACET099 = Recommended screw for fixing stay to sash

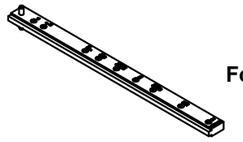

For standard hinges use drill jig = ACEF990N

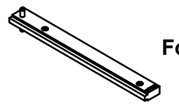

For egress hinges use drill jig = ACEF991

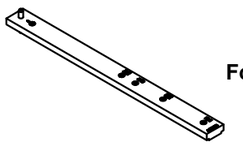

For heavy duty hinges use drill jig = ACEF992

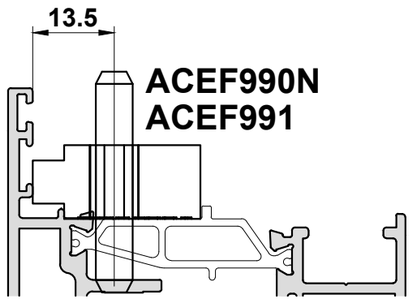

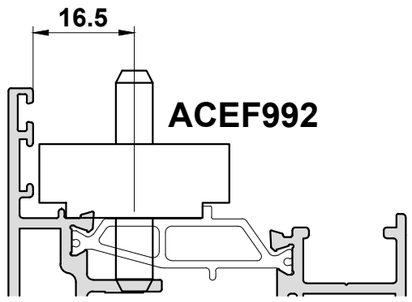

Heavy Duty Stays
(Use drill jig ACEF992)

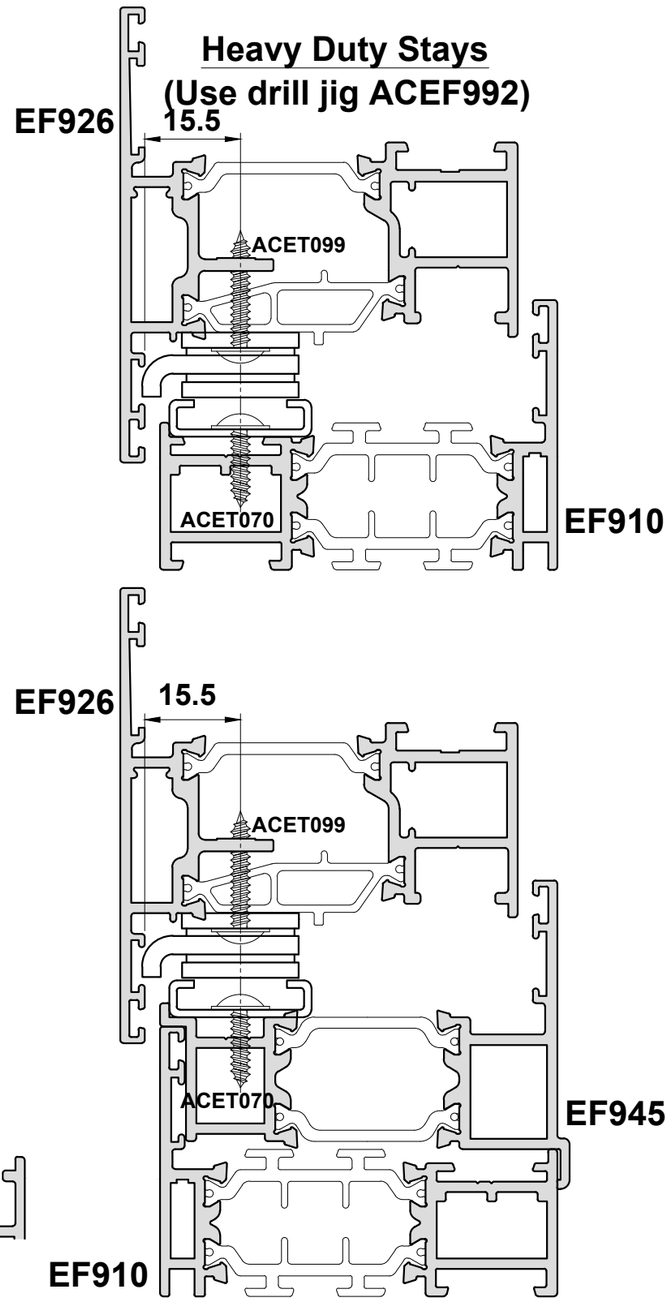

Do Not Scale From This Drawing

Retractable Locking Details with ACET868 Handle

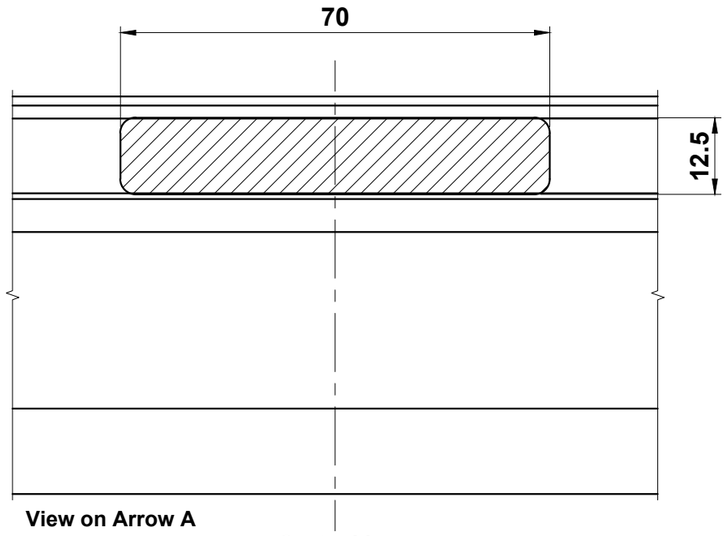

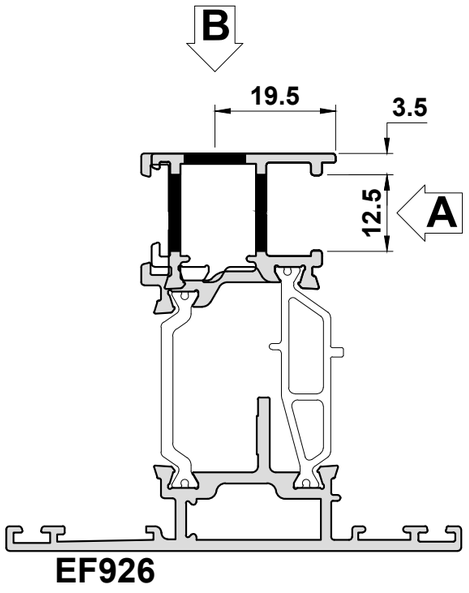

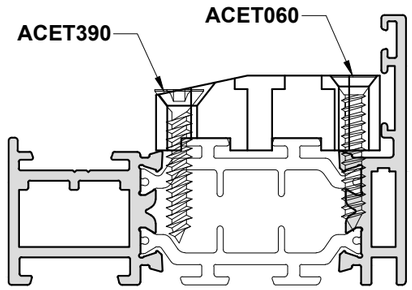

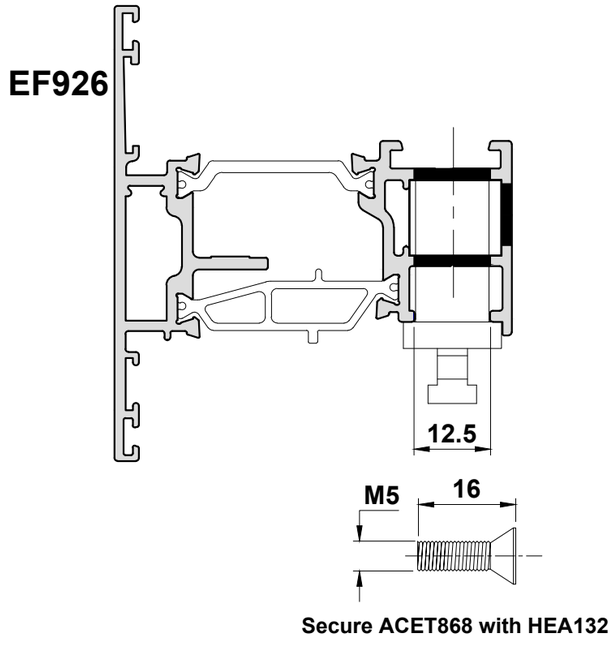

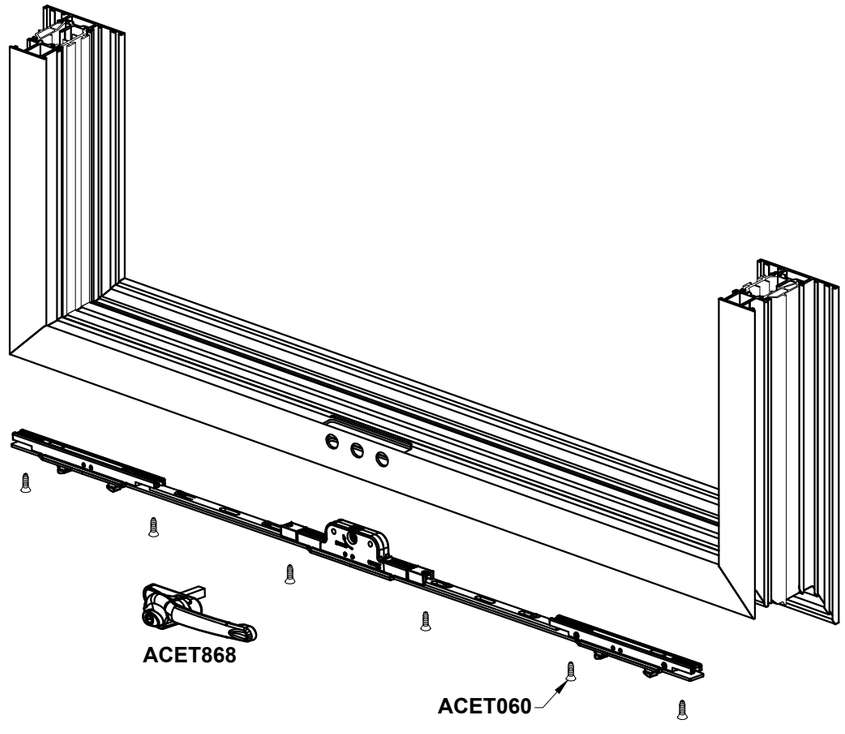

Do Not Scale From This Drawing

Lock Details

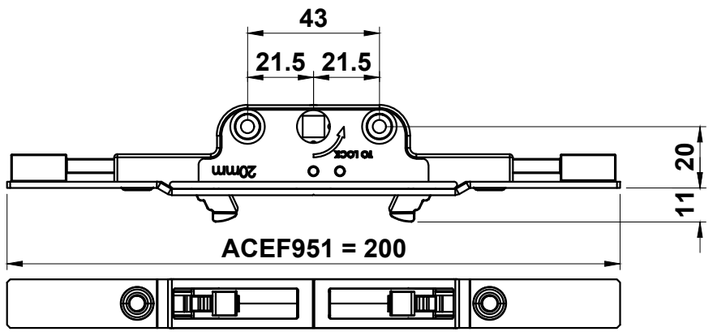

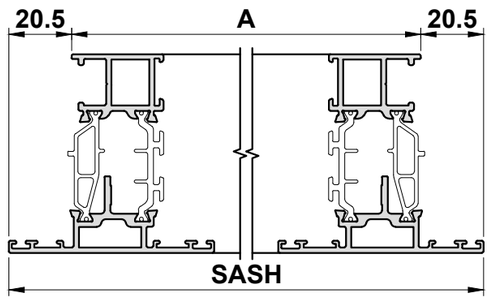

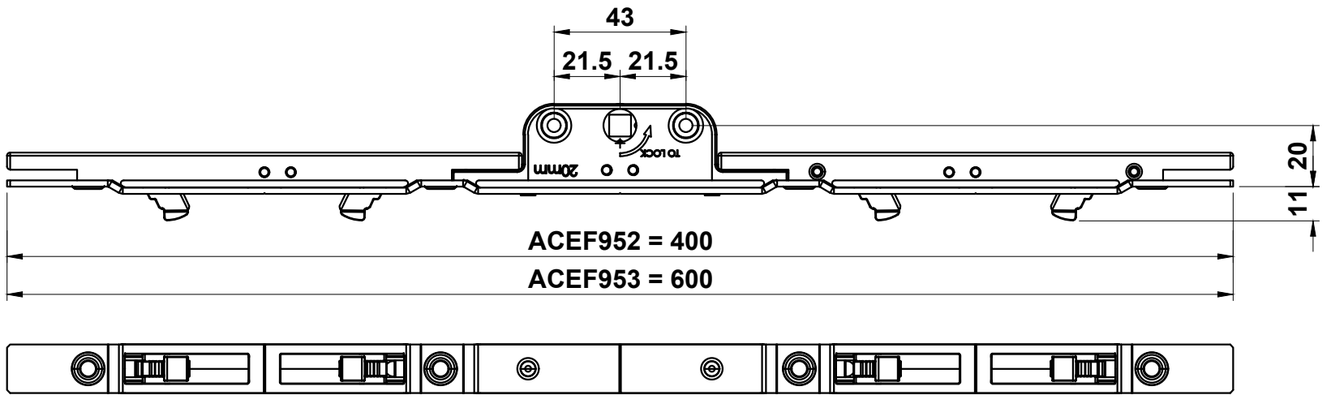

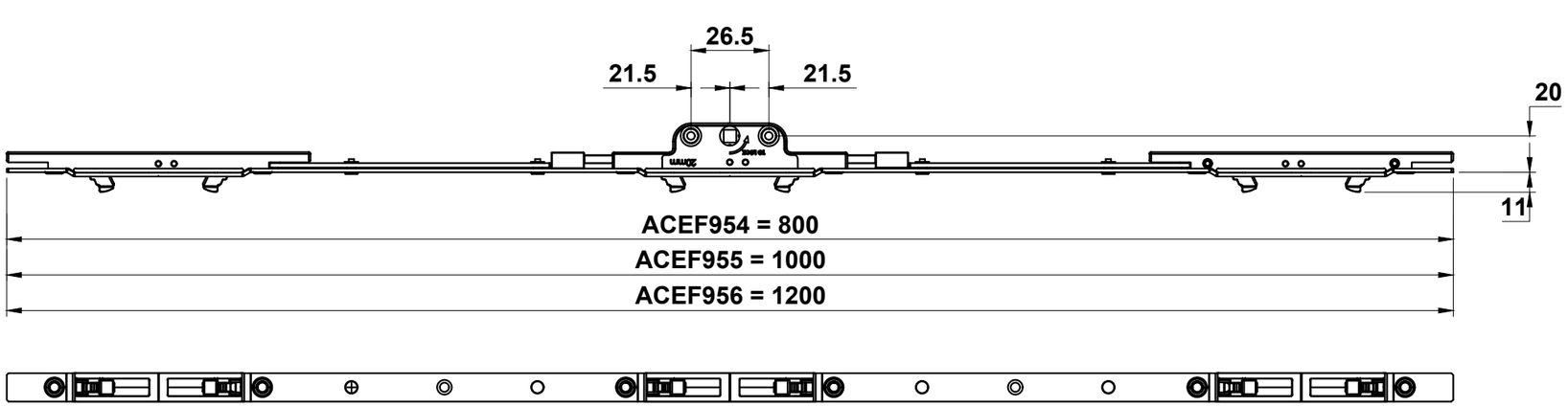

Part Code	Rod Length (mm)	Number of Keeps	Sash Rebate Size ('A')	
			Minimum	Maximum
ACEF951	200	1	200	400
ACEF952	400	2	400	600
ACEF953	600	2	600	800
ACEF954	800	3	800	1000
ACEF955	1000	3	1000	1200
ACEF956	1200	3	1200	1400

Note: To Suit Handle ACET868

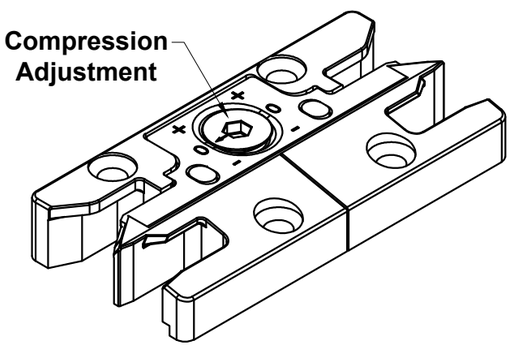

Do Not Scale From This Drawing

Security Hinge Protectors & Pull-In Blocks

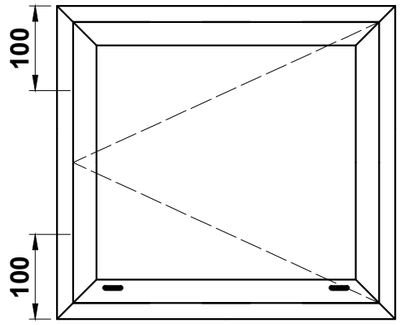

Please Note:

- **2 pairs per opening vent to be fitted to hinged side of window**
- **Each pair must be fitted with the hook centre within 100mm of each hinge**

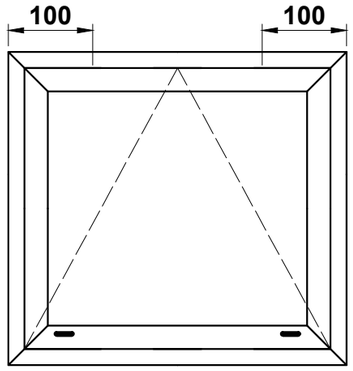

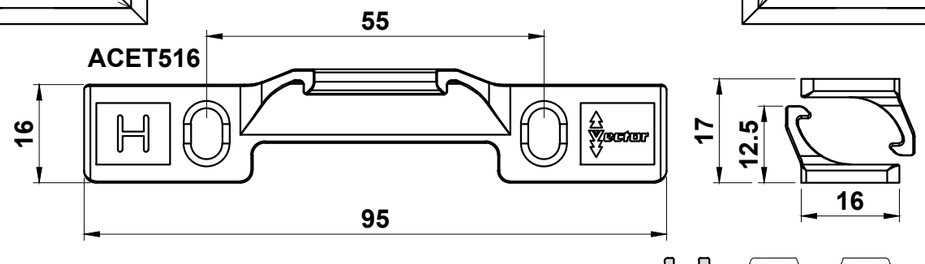

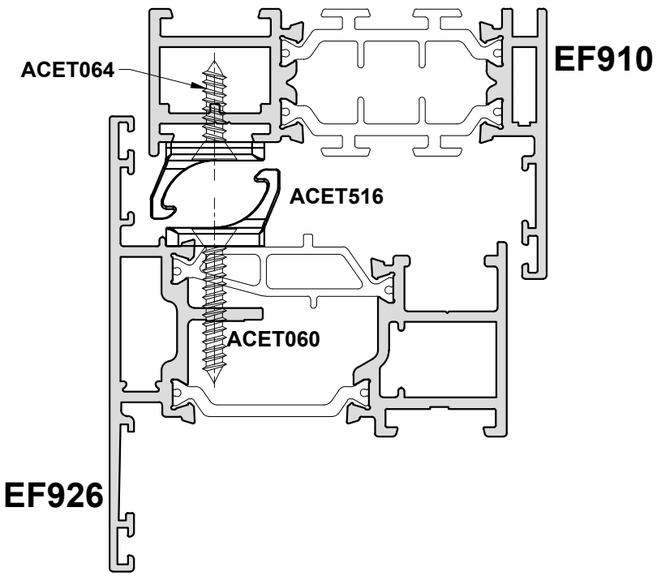

Scale 1:20

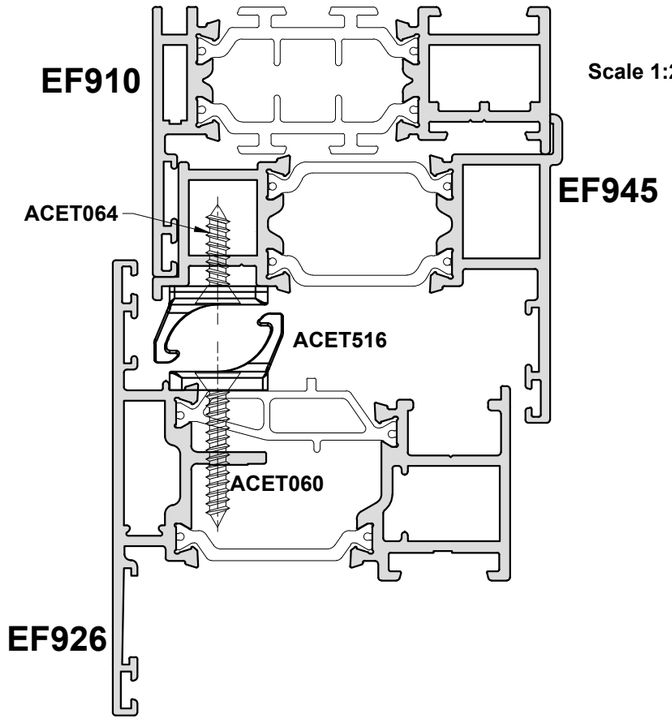

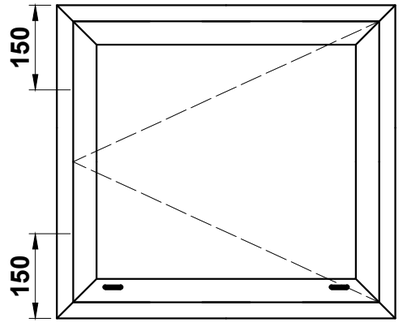

Please Note:

- **2 pairs per opening vent to be fitted to hinged side of window**
- **Each pair must be fitted with the wedge centre within 150mm of each hinge and in the centre of the window when sash height is greater than 800mm.**

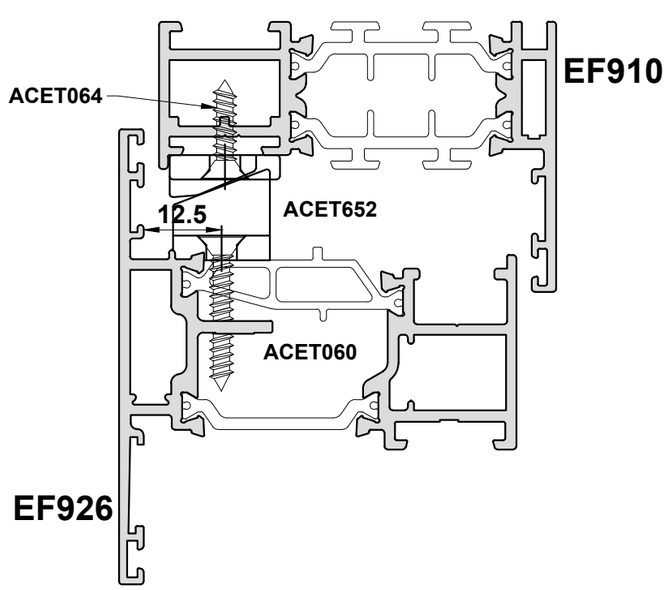

Do Not Scale From This Drawing

Example Layout

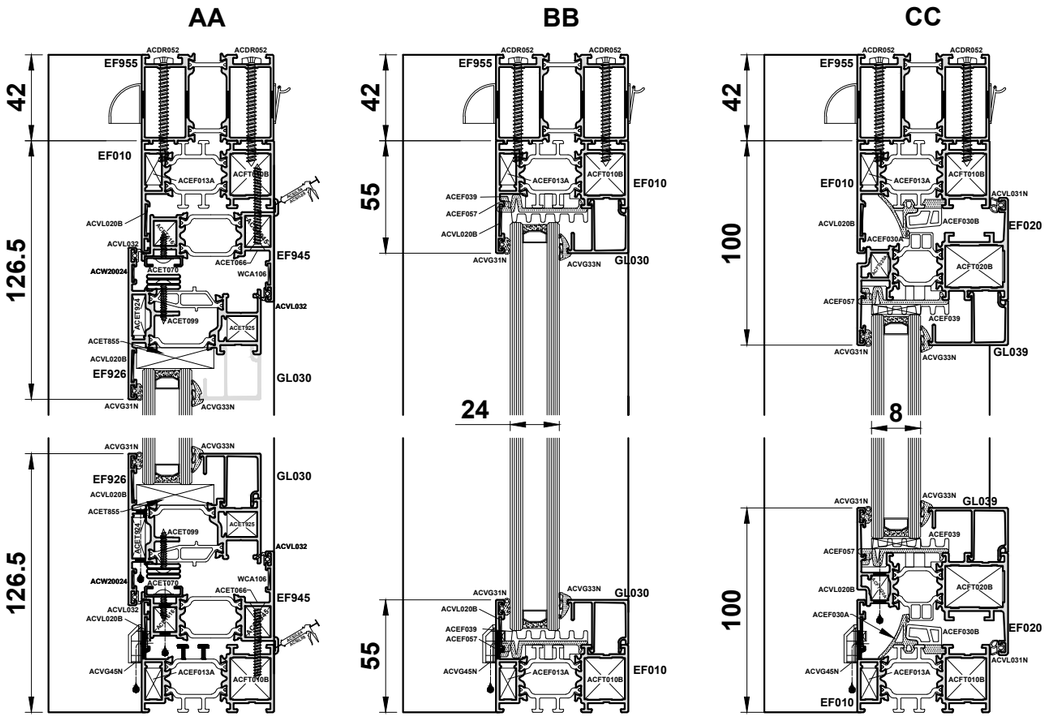

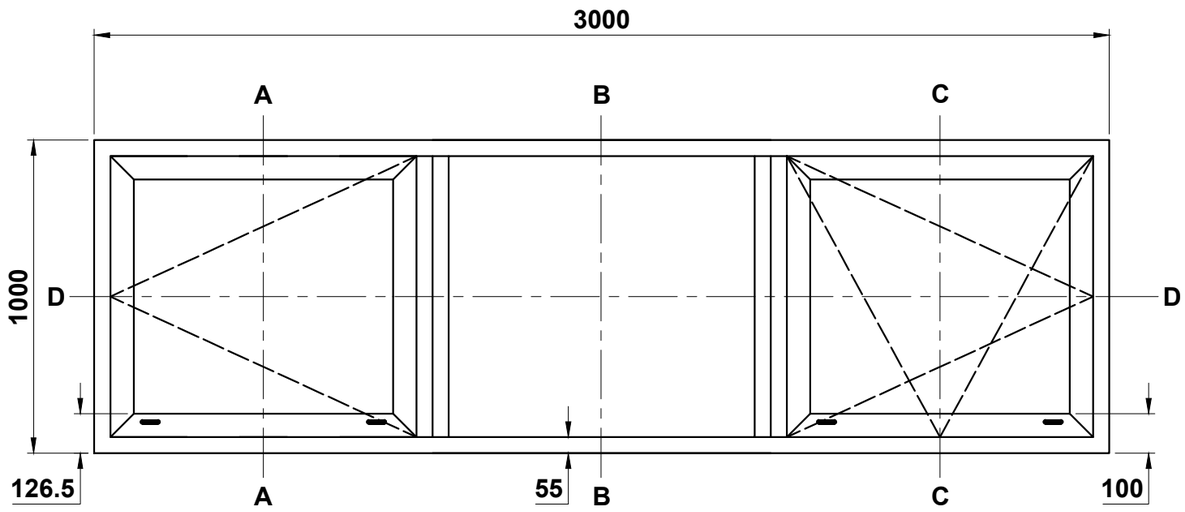

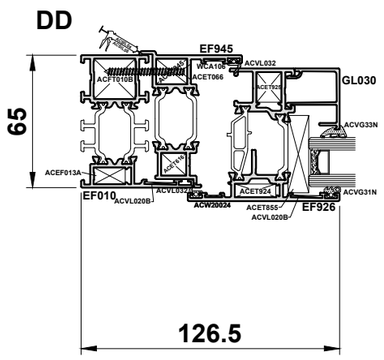

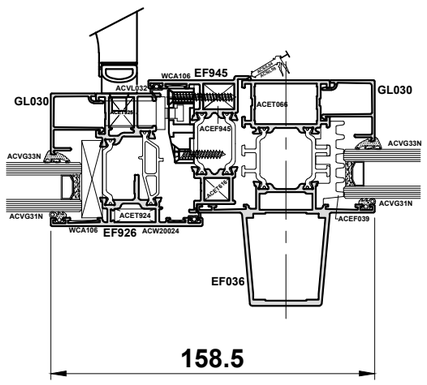

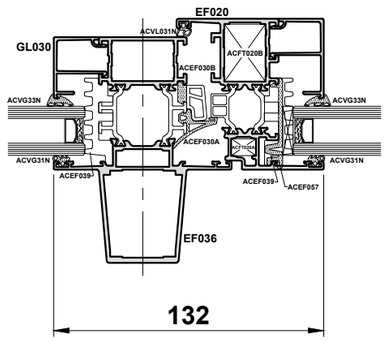

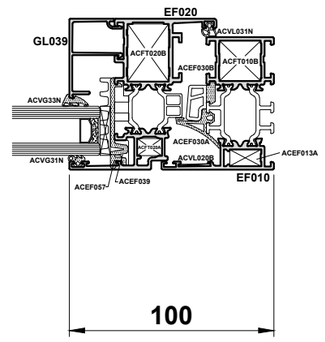

Do Not Scale From This Drawing

Bay Pole Deductions

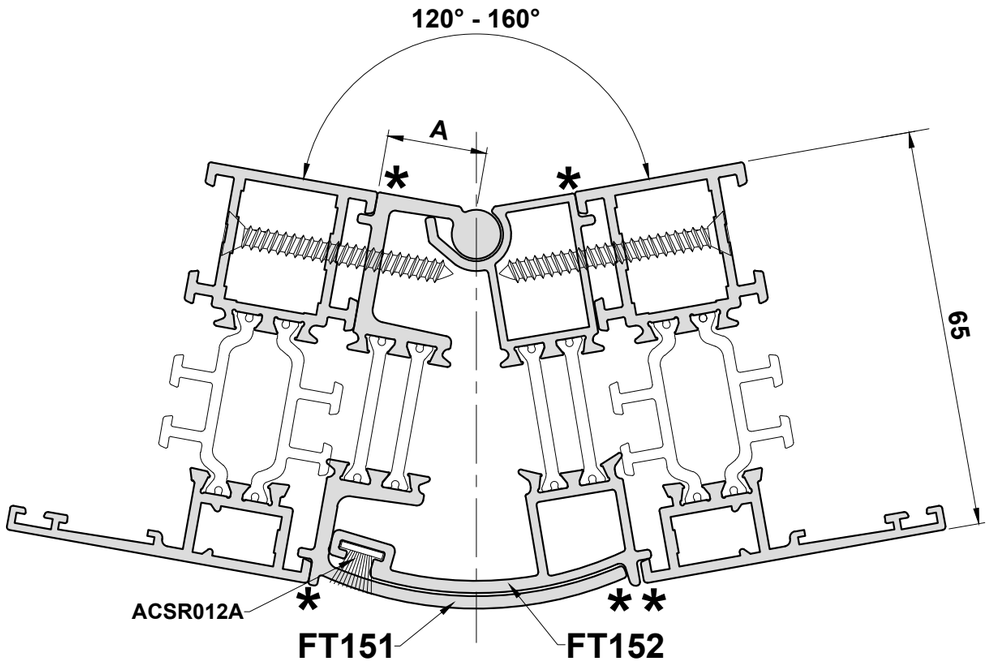

ANGLE	DEDUCTION 'A'
120°	14.5
125°	15
130°	15
135°	15.5
140°	15.5
145°	15.5
150°	16
155°	16
160°	16.5

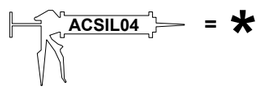

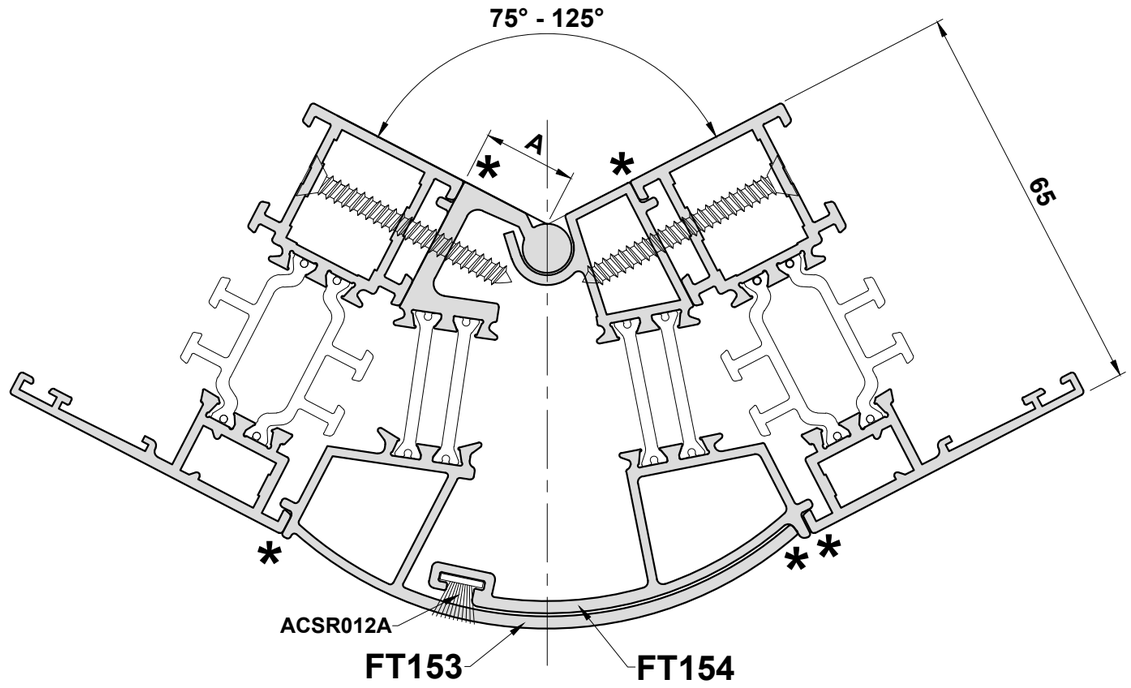

ANGLE	DEDUCTION 'A'
75°	12.5
80°	13
85°	13
90°	13.5
95°	14
100°	14
105°	14.5
110°	14.5
115°	15
120°	15
125°	15

Do Not Scale From This Drawing

EF492 & EF493 Low Threshold Joint Details

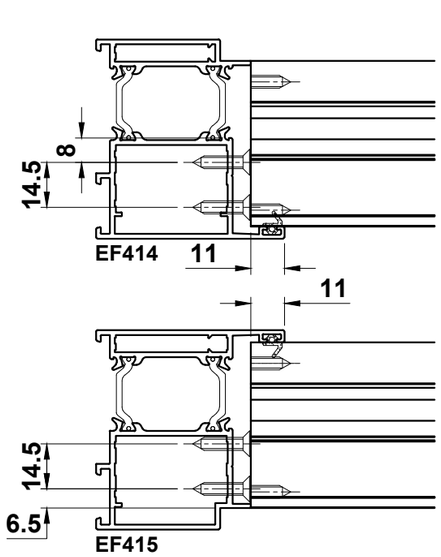

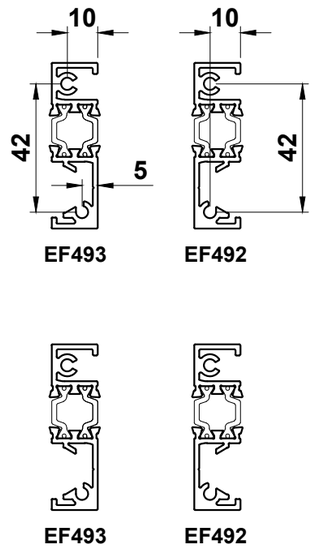

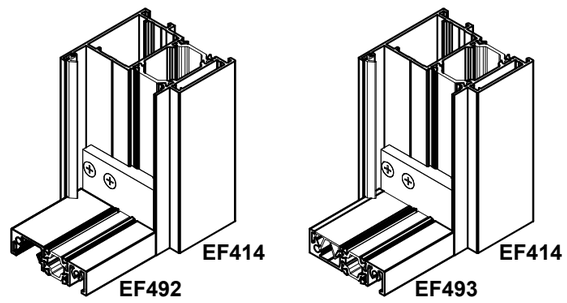

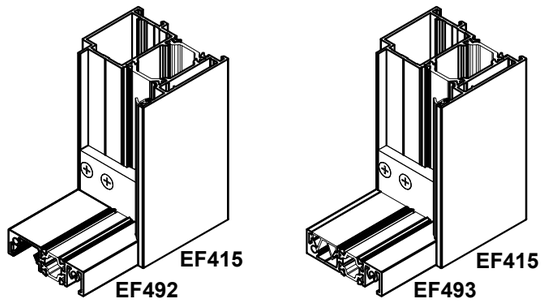

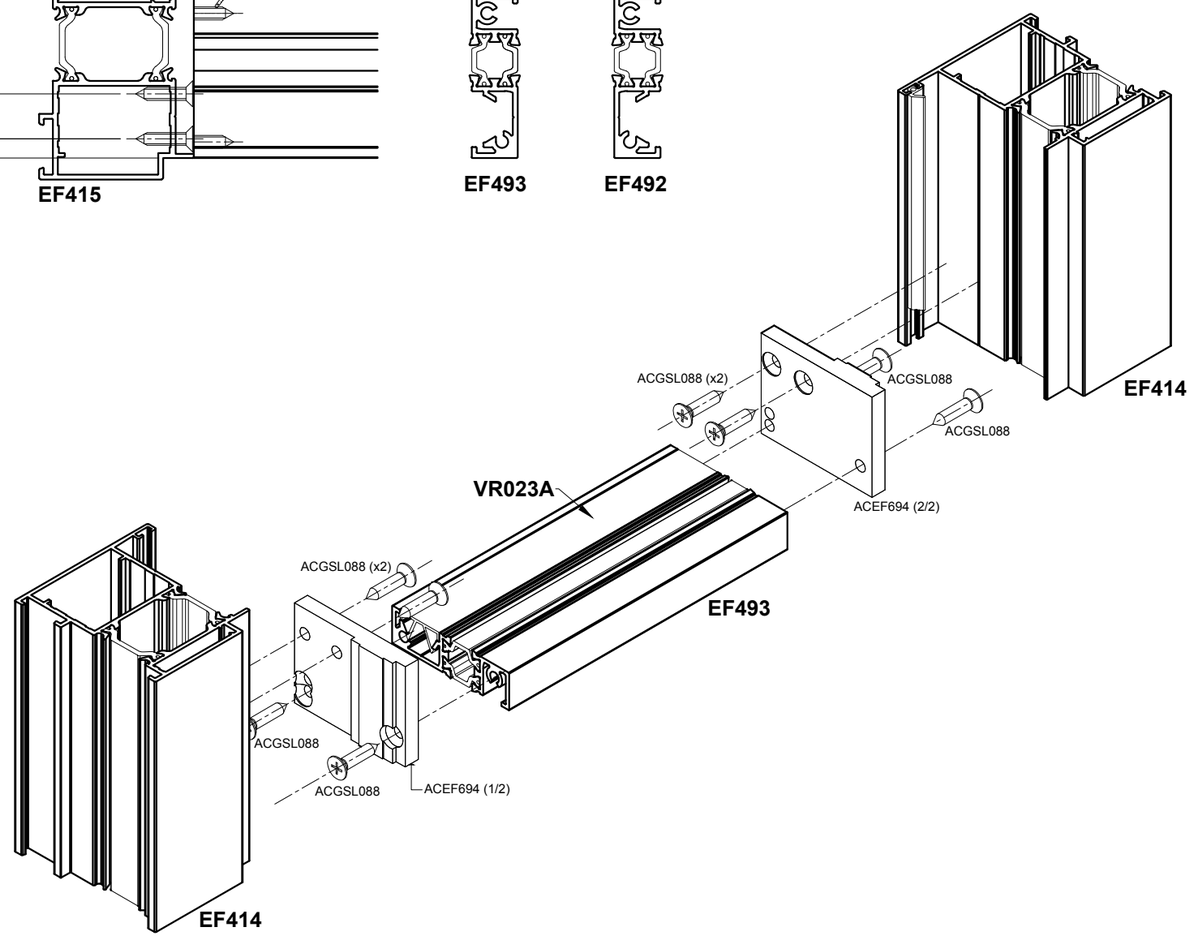

Do Not Scale From This Drawing

EF414 to EF993 Low Threshold Joint Details

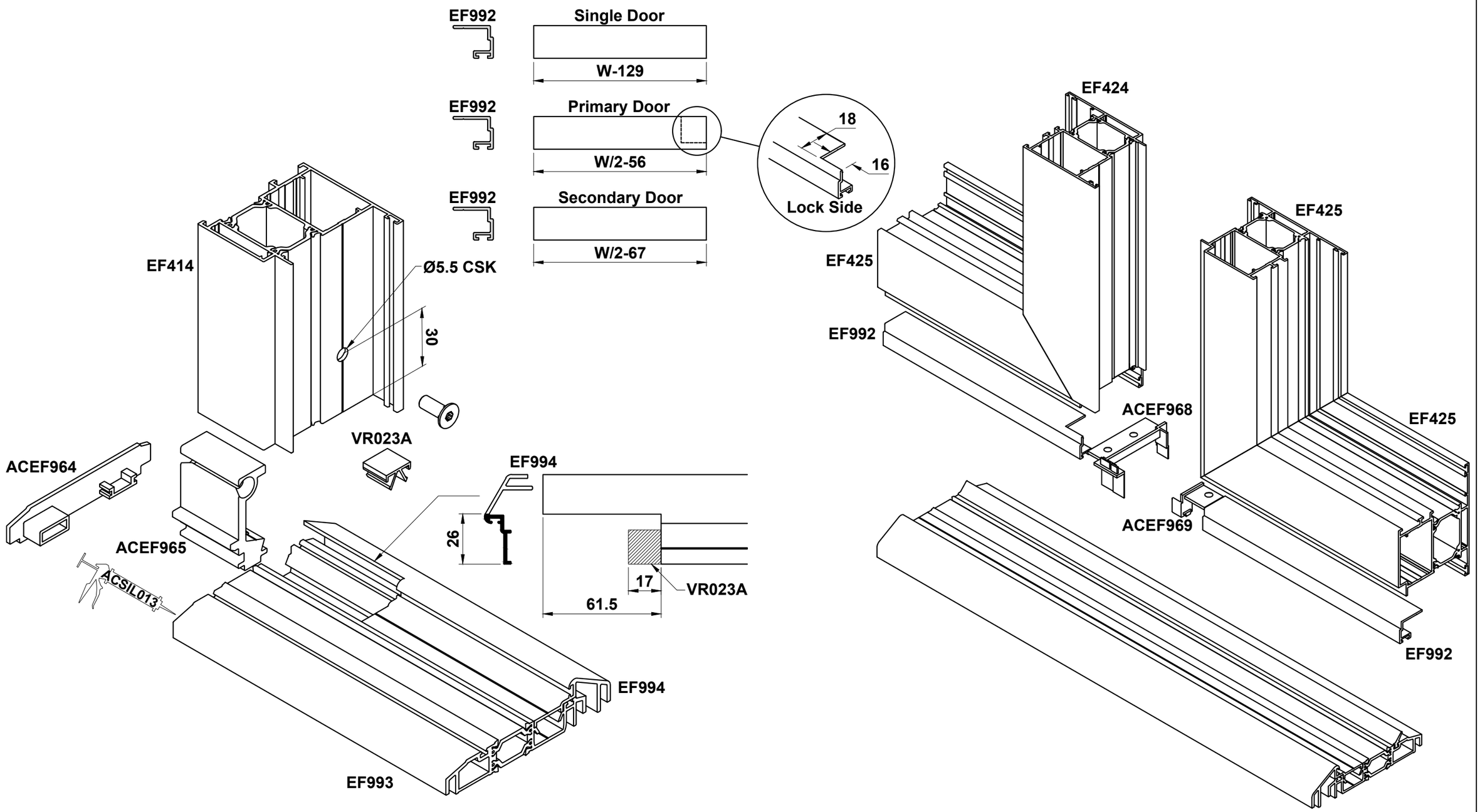

Do Not Scale From This Drawing

EF415 to EF993 Low Threshold Joint Details

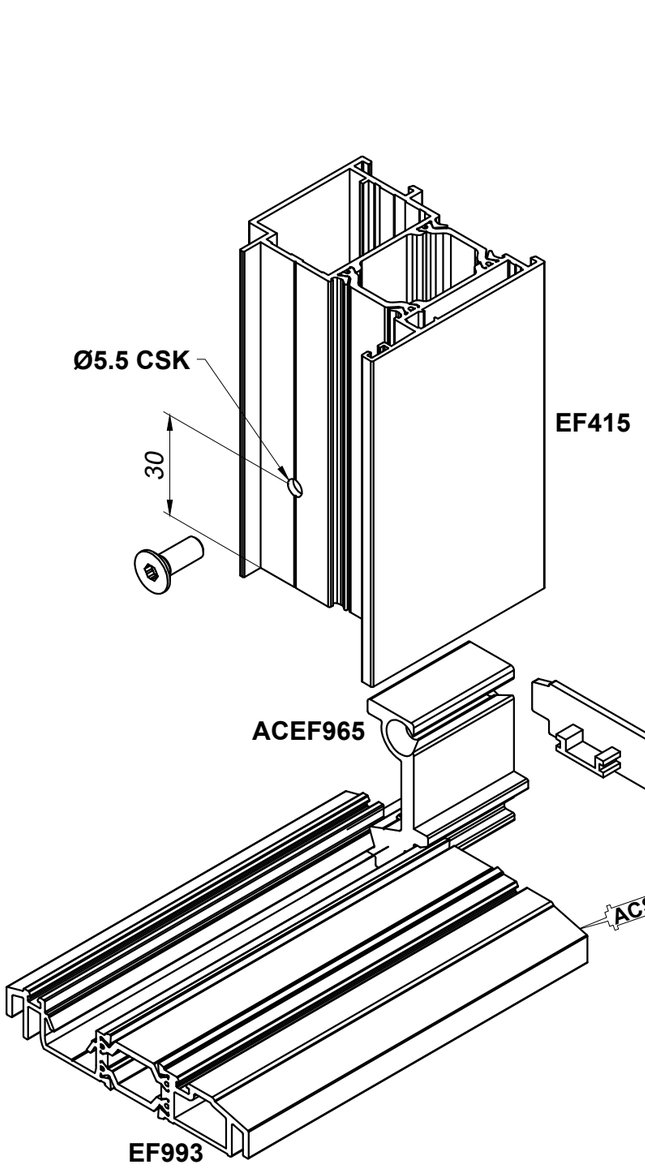

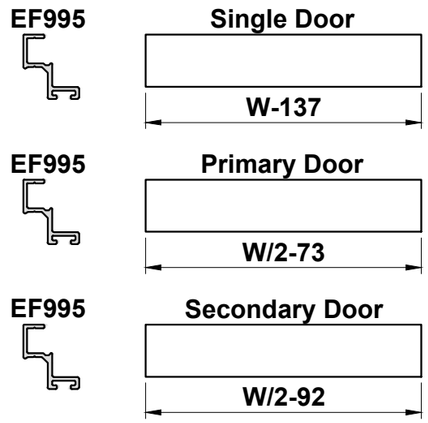

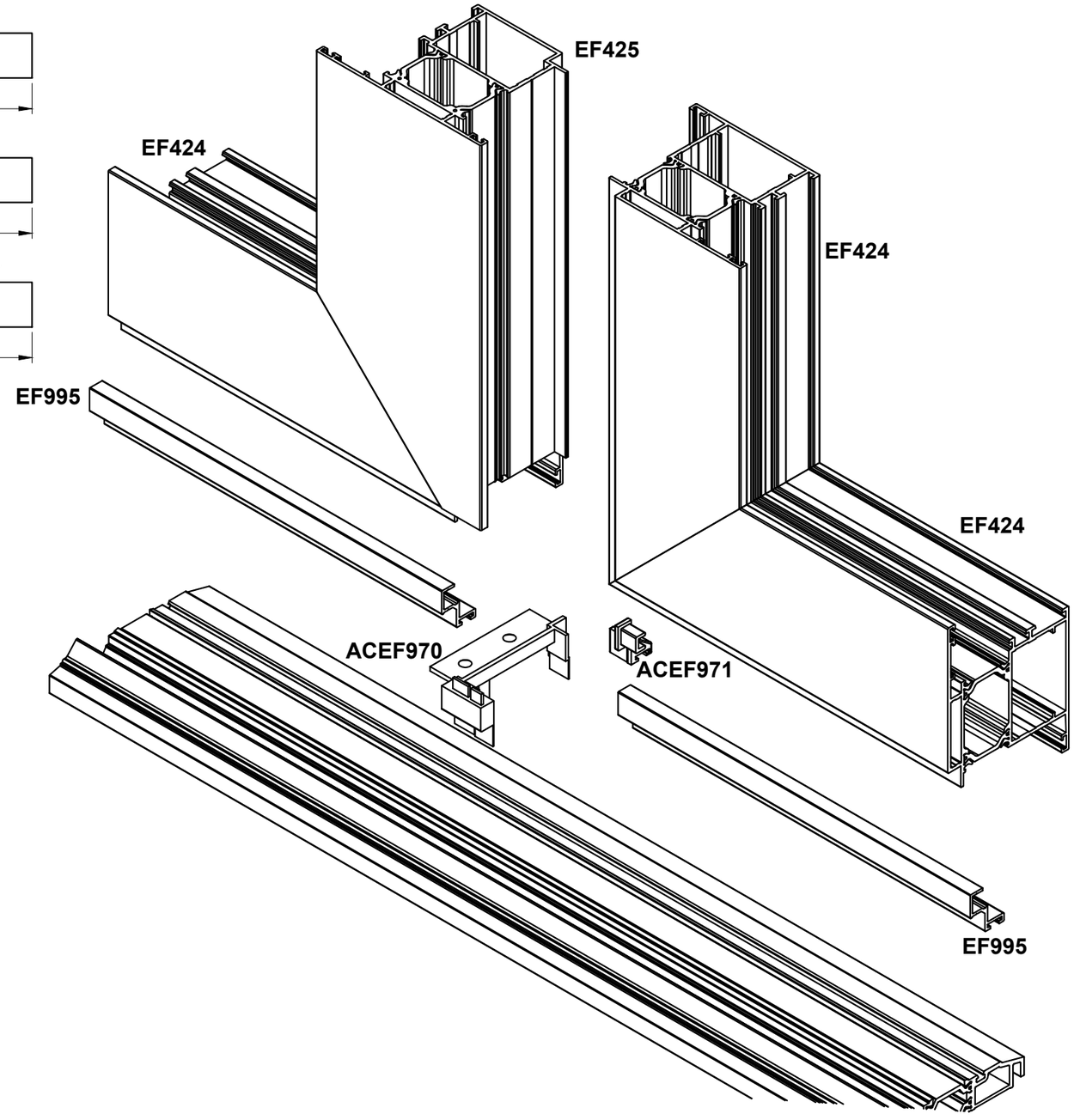

Do Not Scale From This Drawing

EF424 & EF425 Join

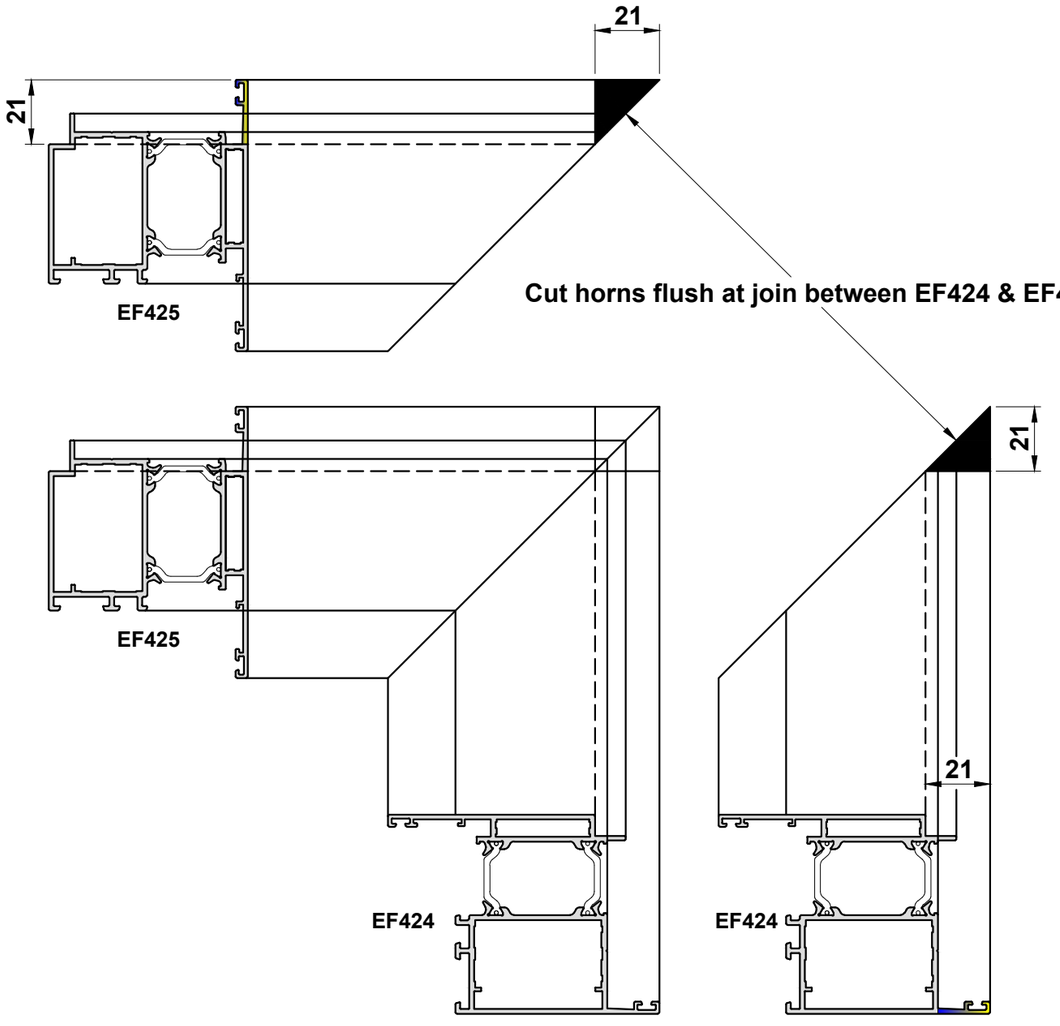

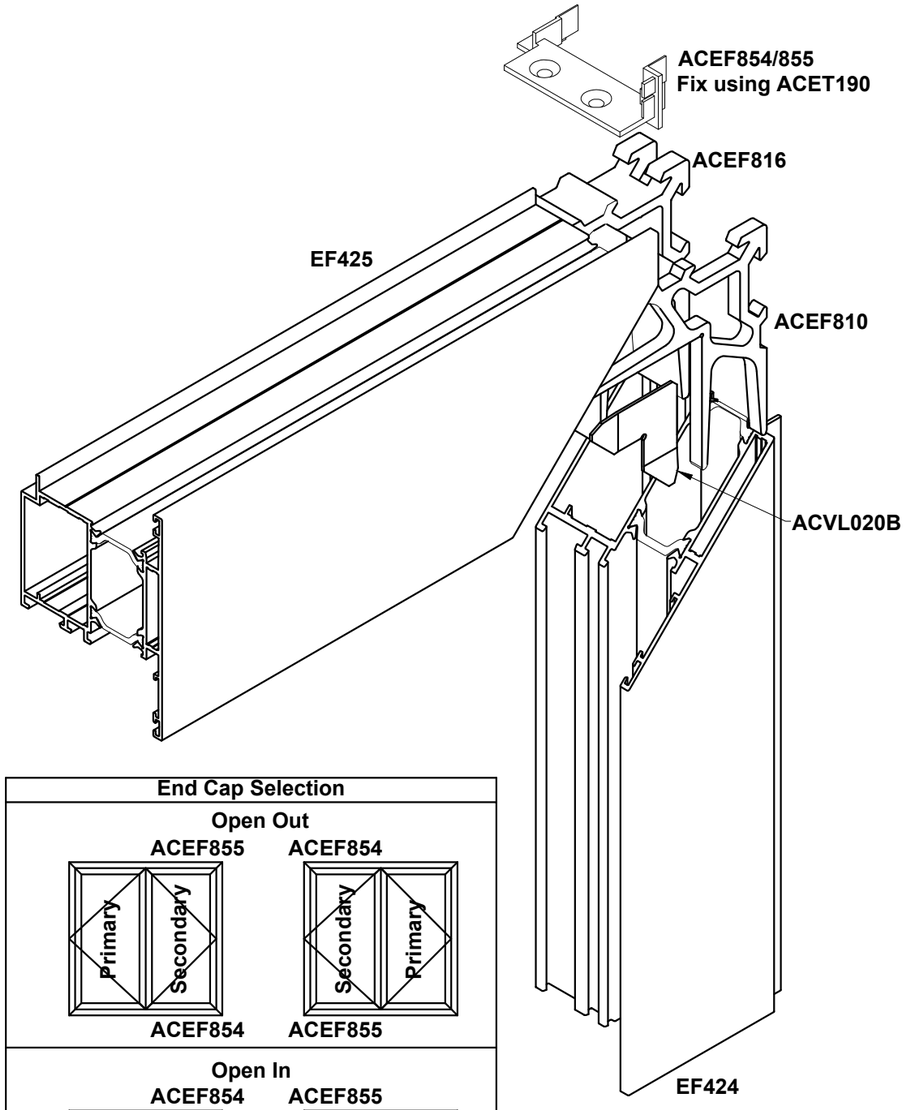

End Cap Selection

Open Out

ACEF855 ACEF854

ACEF854 ACEF855

Open In

ACEF854 ACEF855

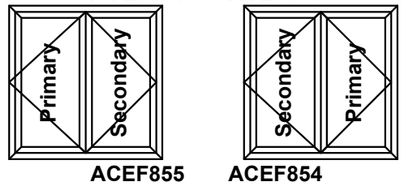

ACEF855 ACEF854

Do Not Scale From This Drawing

Door Drainage Details

C-C

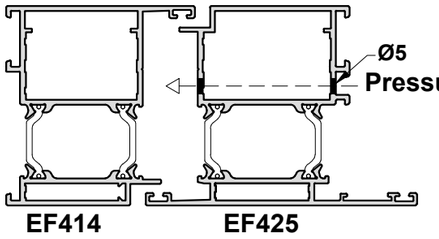

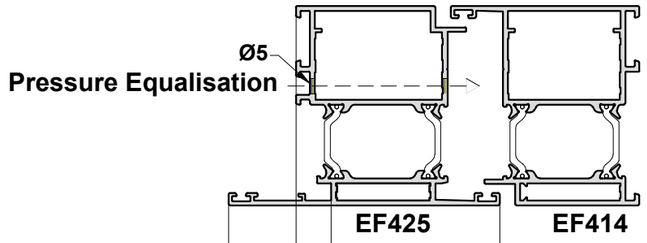

B-B

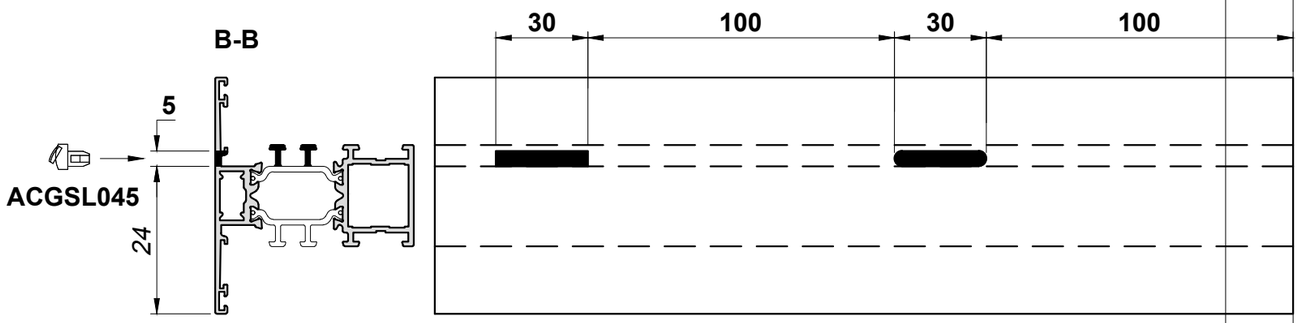

C-C

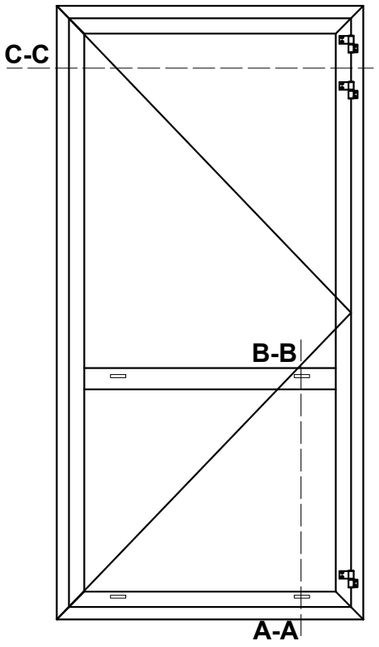

A-A

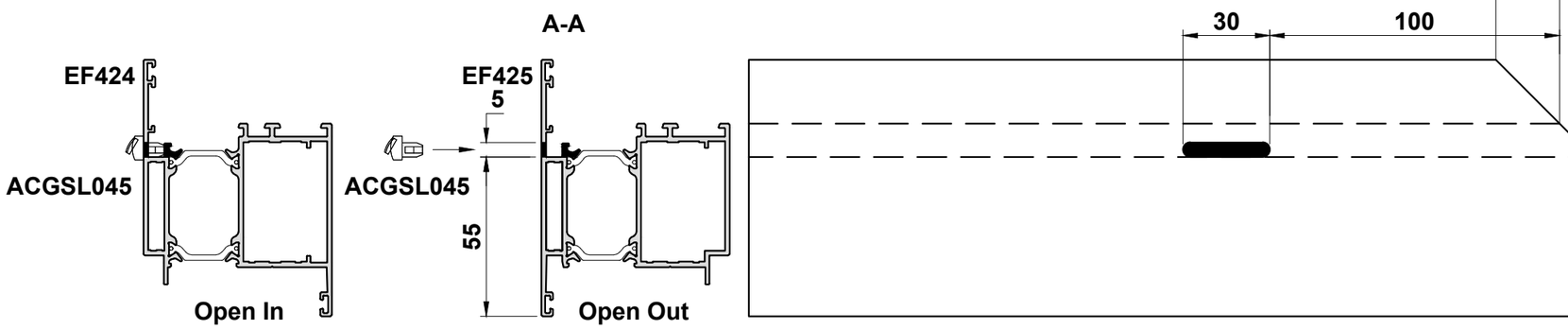

Do Not Scale From This Drawing

ACUN450 Door Hinge Details

Use Drill Jig = ACUN480

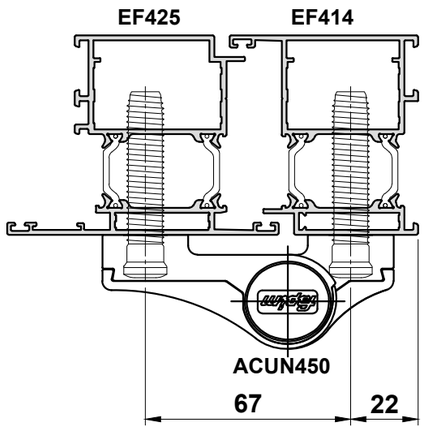

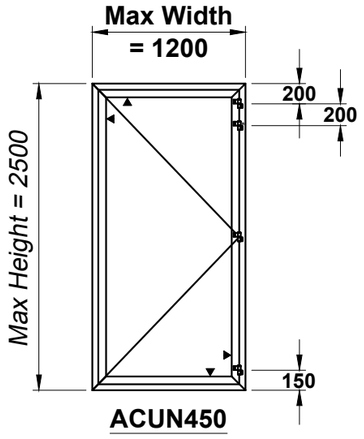

Max Sash Weights (Based on 2 hinges)

Residential = 160kg
Commercial = 145kg
Commercial with closer = 115kg

By adding an additional hinge close to the top hinge the above limits may be increased by 15%. There is no capacity increase by having a hinge at the centre of the door.

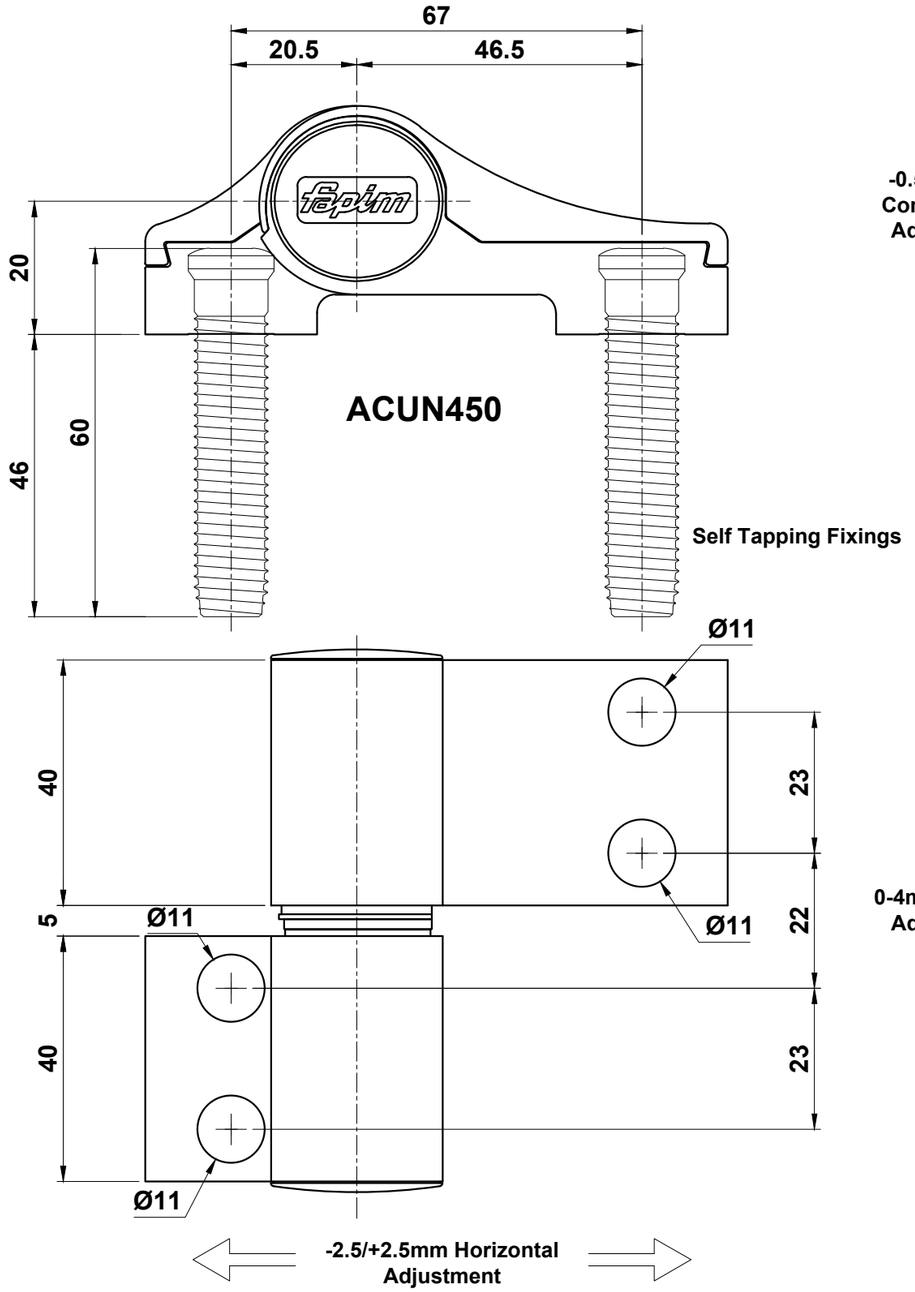

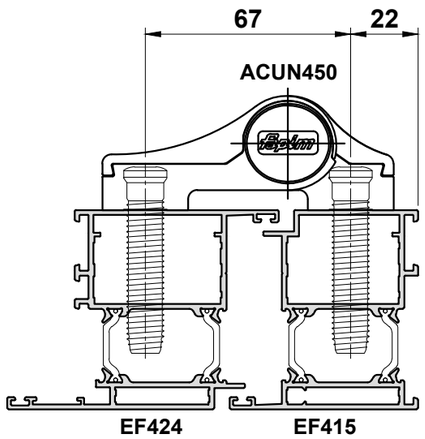

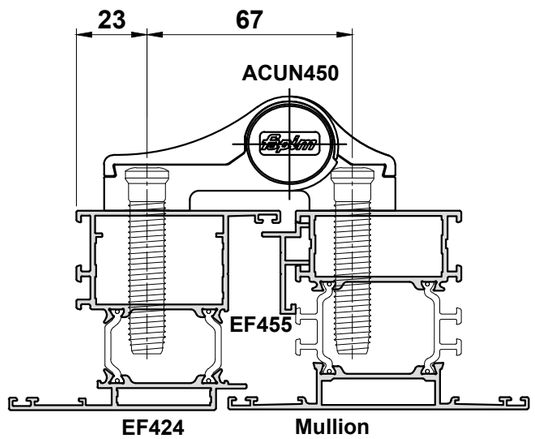

Do Not Scale From This Drawing

Flat Door - Single Open In Locking Options

Lock Guide

Sash Height	Locks	Keeps		
		Middle	Top / Bottom	Continuous
2100-2300	ACSZ550	ACSZ650R	ACSZ651	ACSZ680R
1825-2100	ACSZ551			ACSZ681R
2300-2500	ACSZ552			ACSZ682R
1 Point Lock	ACSZ555			

Handle With Large Backplate Guide

Ext. Handle	Int. Handle	Spindle	Cylinder	Screw
	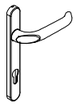	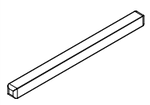	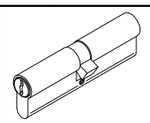	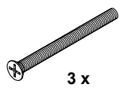 3 x
ACSZ800	ACSZ801	ACMX309 Sq. Spindle 130mm	ACMX0030 Half Cylinder	ACMX861 M5 x 75mm
	ACSZ803			
	ACSZ830 T			
ACSZ802	ACSZ803		ACMX01613 30/55 Cylinder	
	ACSZ830			
ACSZ400 + 2 x ACVS061	ACSZ803	ACMX008 Sq. Spindle 60mm	ACMX01613 30/55 Cylinder	ACVS061 M5 x 40mm
	ACSZ830			

Keep Handing Guide

Viewed Externally

OPEN IN

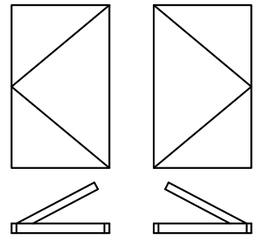

Right Hand Lock Set

Left Hand Lock Set

Outside

OPEN OUT

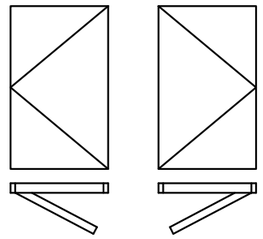

Left Hand Lock Set

Right Hand Lock Set

Outside

EF415 - EF424

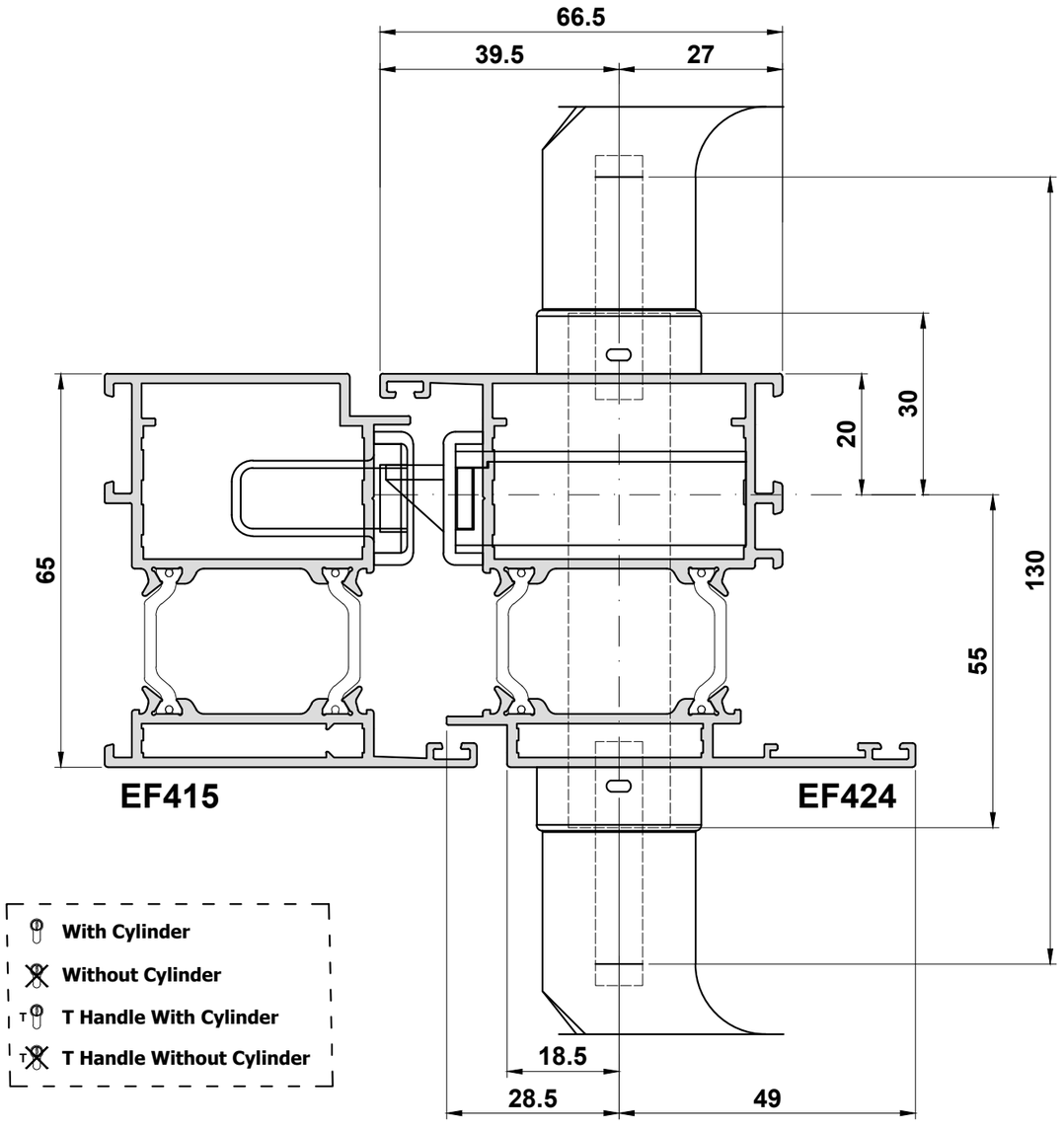

Handle with Small Backplate Guide

Ext. Handle	Ext. Escutcheon	Int. Handle	Int. Escutcheon	Spindle	Cylinder	Screw
	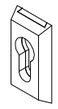		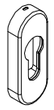	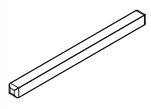	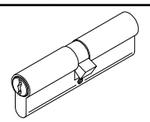	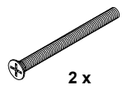 2 x
ACSZ837	ACSZ400	ACSZ836	ACMX208	ACMX309 Sq. Spindle 130mm	ACMX01613	ACMX861 M5 x 75mm
					ACMX0030	
	ACSZ400			ACMX008 Sq. Spindle 60mm	ACMX01613	ACVS061 M5 x 40mm
					ACMX0030	
ACSZ837	ACSZ400	ACSZ827 T		ACMX309 Sq. Spindle 130mm	ACMX01613	ACMX861 M5 x 75mm
					ACMX0030	
	2 X ACVS061		2 X DIN965 M5 X 20			

With Cylinder

Without Cylinder

T Handle With Cylinder

T Handle Without Cylinder

For PAS24 accessory options, please see page E48

Do Not Scale From This Drawing

Flat Door - Double Open In Locking Options

Lock Guide

Sash Height	Locks	Keeps		
		Middle	Top / Bottom	Continuous
2100-2300	ACSZ550	ACSZ650R	ACSZ651	ACSZ680R
1825-2100	ACSZ551			ACSZ681R
*2300-2500	ACSZ552			ACSZ682R
1 Point Lock	ACSZ555			

*If using AVCL432 shoot bolts, use ACSZ550 up to 2500mm sash height

Keep Handing Guide

Viewed Externally

OPEN IN

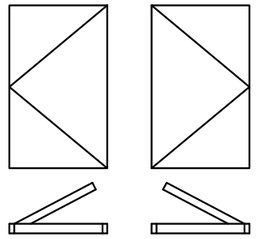

Right Hand Lock Set — Left Hand Lock Set

Outside

OPEN OUT

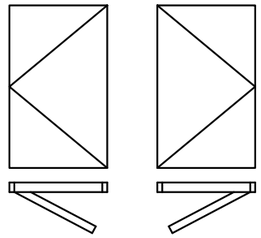

Left Hand Lock Set — Right Hand Lock Set

Outside

Handle With Large Backplate Guide

Ext. Handle	Int. Handle	Spindle	Cylinder	Screw
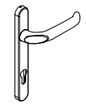		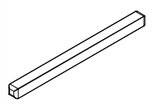	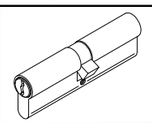	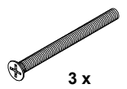 3 x
ACSZ800	ACSZ801	ACMX309 Sq. Spindle 130mm	ACMX0030 Half Cylinder	ACMX861 M5 x 75mm
	ACSZ803			
	ACSZ830 T			
ACSZ802	ACSZ803		ACMX01613 30/55 Cylinder	
	ACSZ830			
ACSZ400 + 2 x ACVS061	ACSZ803	ACMX008 Sq. Spindle 60mm	ACMX01613 30/55 Cylinder	ACVS061 M5 x 40mm
	ACSZ830			

Handle with Small Backplate Guide

Ext. Handle	Ext. Escutcheon	Int. Handle	Int. Escutcheon	Spindle	Cylinder	Screw
	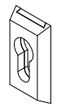		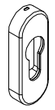	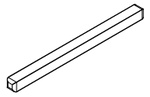	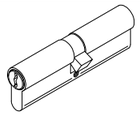	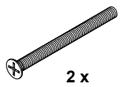 2 x
ACSZ837	ACSZ400	ACSZ836	ACMX208	ACMX309 Sq. Spindle 130mm	ACMX01613	ACMX861 M5 x 75mm
					ACMX0030	
	ACSZ400			ACMX008 Sq. Spindle 60mm	ACMX01613	ACVS061 M5 x 40mm
					ACMX0030	
ACSZ837	ACSZ400	ACSZ827 T		ACMX309 Sq. Spindle 130mm	ACMX01613	ACMX861 M5 x 75mm
					ACMX0030	
	2 X ACVS061		2 X DIN965 M5 X 20			

For PAS24 accessory options, please see page E48

EF425 - EF424

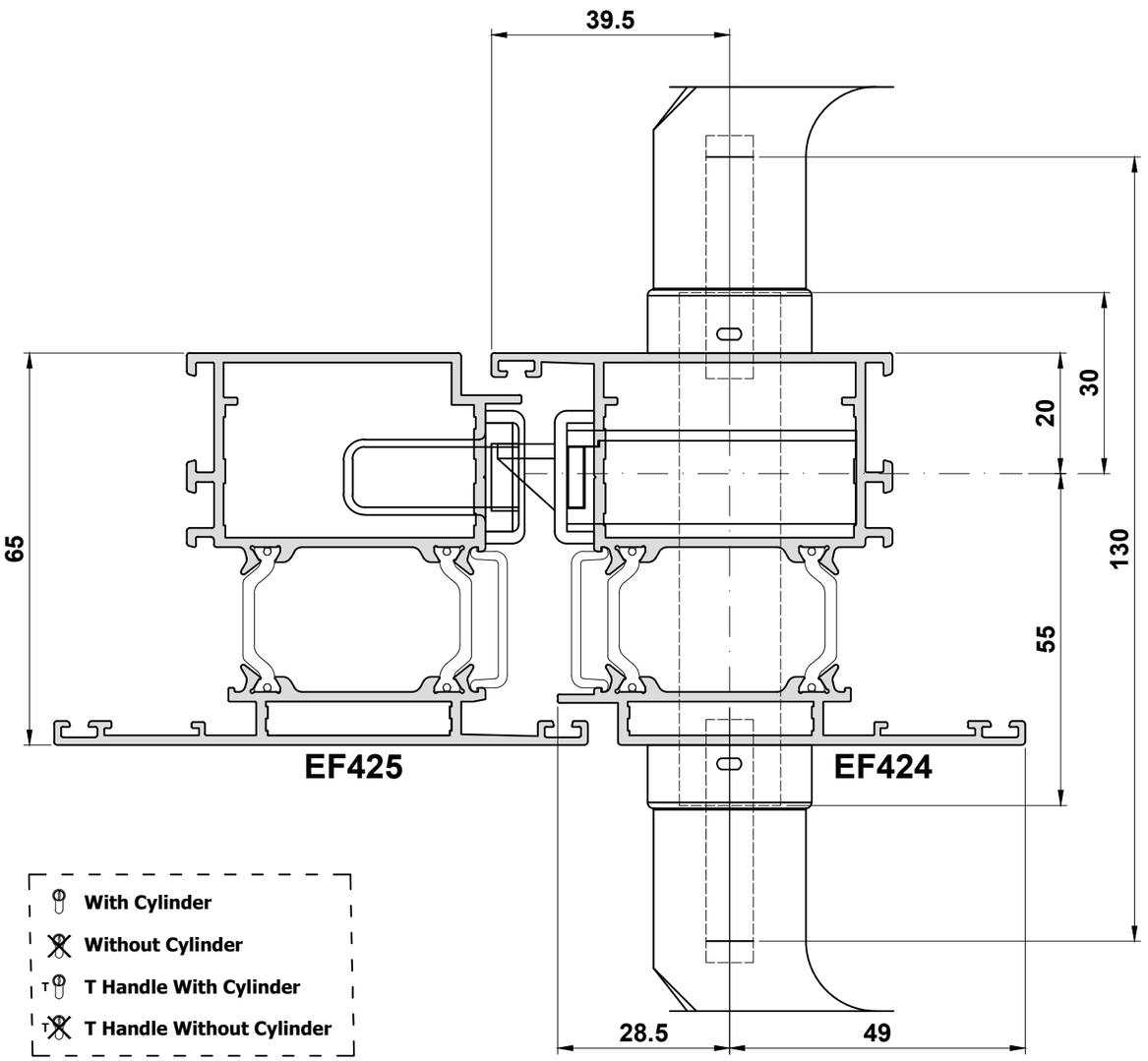

With Cylinder

Without Cylinder

T Handle With Cylinder

T Handle Without Cylinder

Do Not Scale From This Drawing

ACSZ550/551/552 Preparation for EF424

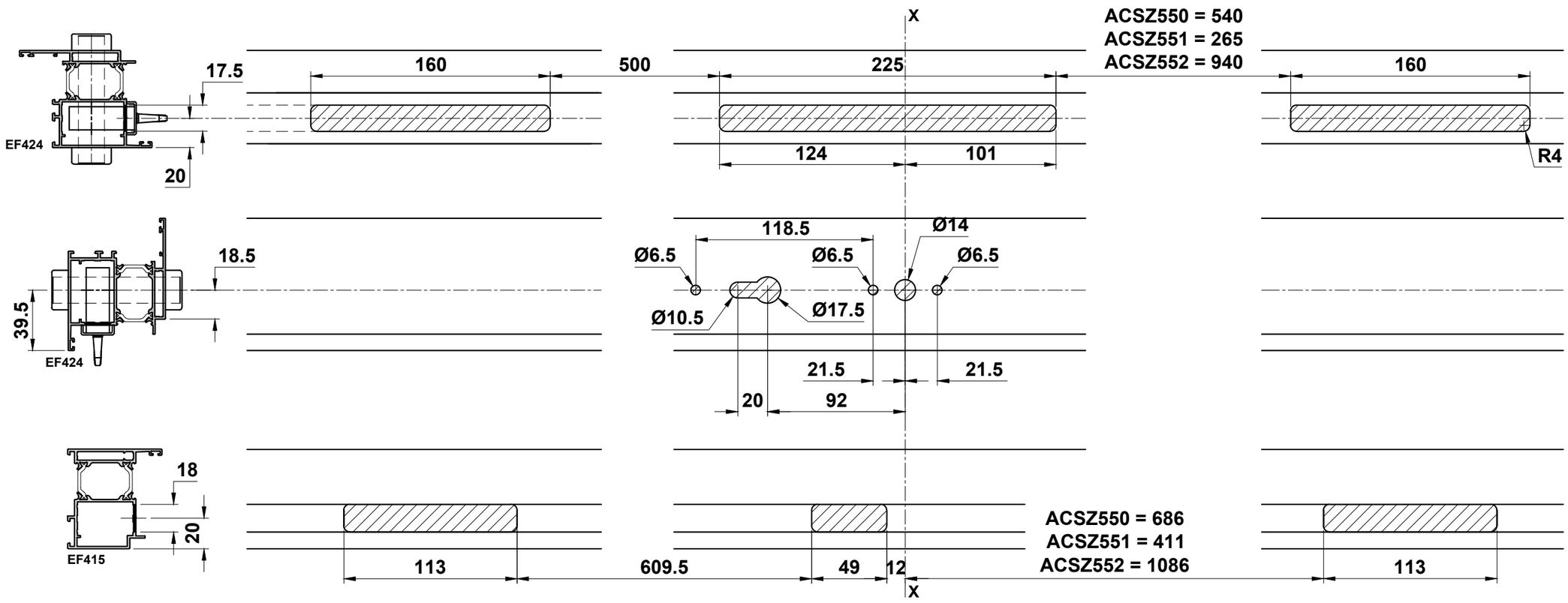

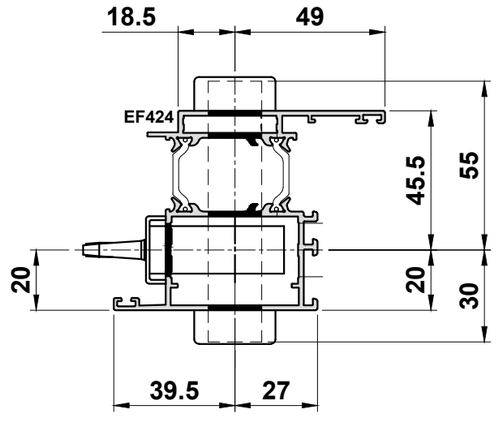

Do Not Scale From This Drawing

Flat Door - Single Open Out Locking Options

Lock Guide

Sash Height	Locks	Keeps		
		Middle	Top / Bottom	Continuous
2100-2300	ACSZ550	ACSZ650R	ACSZ651	ACSZ680R
1825-2100	ACSZ551			ACSZ681R
2300-2500	ACSZ552			ACSZ682R
1 Point Lock	ACSZ555			

Handle With Large Backplate Guide

Ext. Handle	Int. Handle	Spindle	Cylinder	Screw
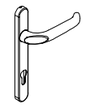	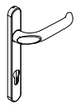	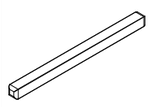	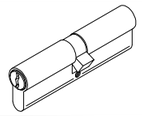	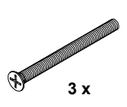 3 x
ACSZ800	ACSZ801	ACMX309 Sq. Spindle 130mm	ACMX0030 Half Cylinder	ACMX861 M5 x 75mm
	ACSZ803			
	ACSZ830 T			
ACSZ802	ACSZ803		ACMX01613 30/55 Cylinder	
	ACSZ830			
ACSZ400 + 2 x ACVS061	ACSZ803	ACMX008 Sq. Spindle 60mm	ACMX01613 30/55 Cylinder	ACVS061 M5 x 40mm
	ACSZ830			

Handle with Small Backplate Guide

Ext. Handle	Ext. Escutcheon	Int. Handle	Int. Escutcheon	Spindle	Cylinder	Screw
	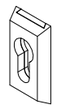		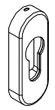	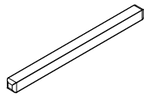	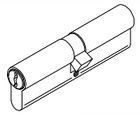	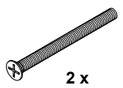 2 x
ACSZ837	ACSZ400	ACSZ836	ACMX208	ACMX309 Sq. Spindle 130mm	ACMX01613	ACMX861 M5 x 75mm
					ACMX0030	
	ACSZ400			ACMX008 Sq. Spindle 60mm	ACMX01613	ACVS061 M5 x 40mm
					ACMX0030	
ACSZ837	ACSZ400	ACSZ827 T		ACMX309 Sq. Spindle 130mm	ACMX01613	ACMX861 M5 x 75mm
					ACMX0030	
	2 X ACVS061		2 X DIN965 M5 X 20			

For PAS24 accessory options, please see page E48

Keep Handing Guide

Viewed Externally

OPEN IN

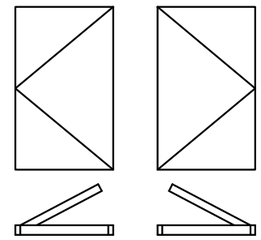

Right Hand Lock Set — Left Hand Lock Set

Outside

OPEN OUT

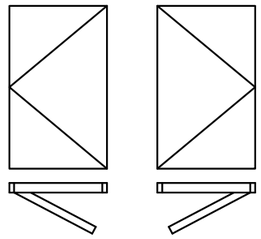

Left Hand Lock Set — Right Hand Lock Set

Outside

EF414 - EF425

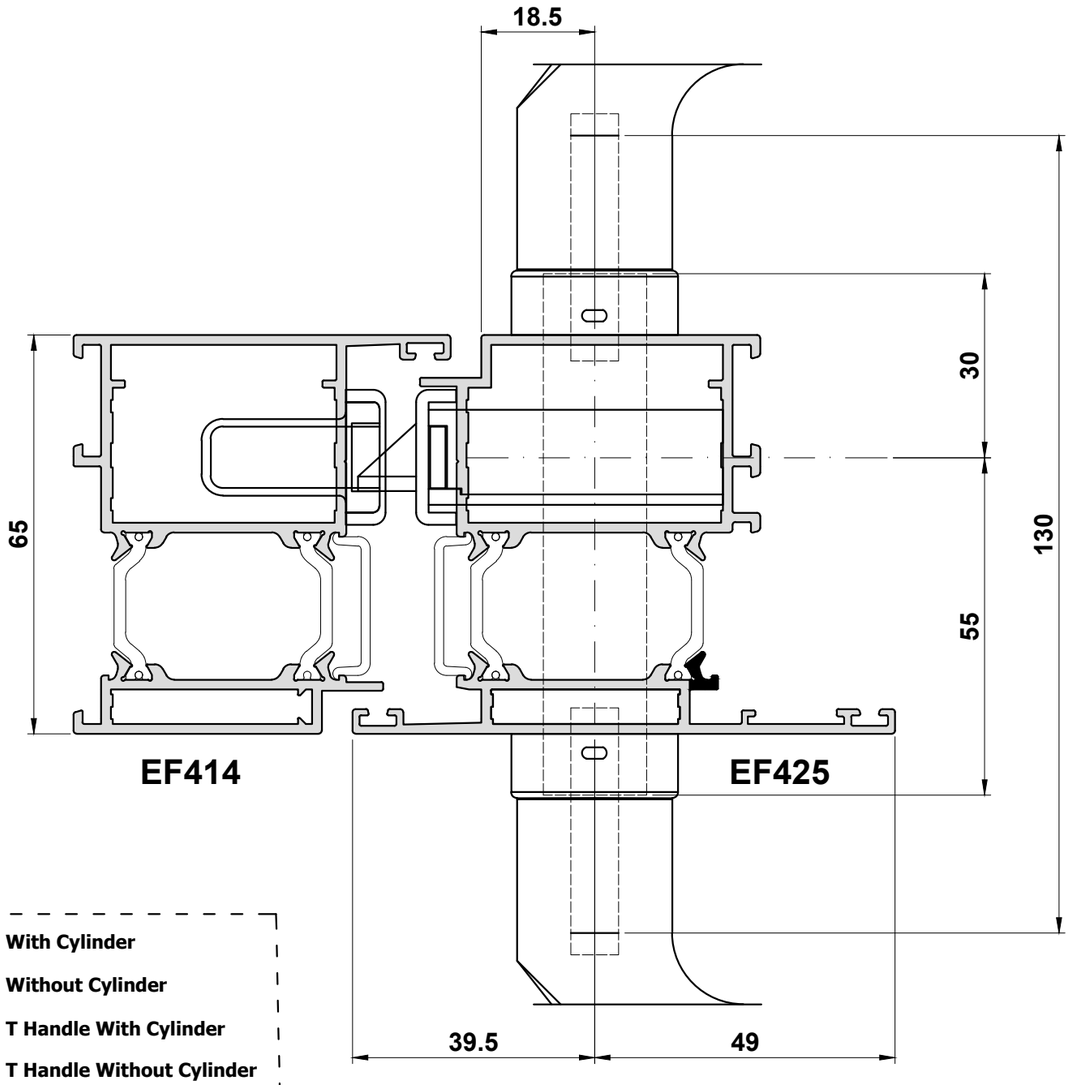

- With Cylinder
- Without Cylinder
- T Handle With Cylinder
- T Handle Without Cylinder

Do Not Scale From This Drawing

Flat Door - Double Open Out Locking Options

Lock Guide

Sash Height	Locks	Keeps		
		Middle	Top / Bottom	Continuous
2100-2300	ACSZ550	ACSZ650R	ACSZ651	ACSZ680R
1825-2100	ACSZ551			ACSZ681R
*2300-2500	ACSZ552			ACSZ682R
1 Point Lock	ACSZ555			

*If using AVCL432 shoot bolts, use ACSZ550 up to 2500mm sash height

Keep Handing Guide

Viewed Externally

OPEN IN

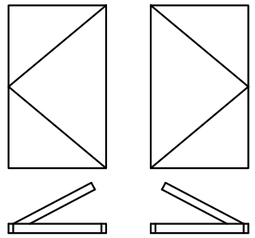

Right Hand Lock Set — Left Hand Lock Set

Outside

OPEN OUT

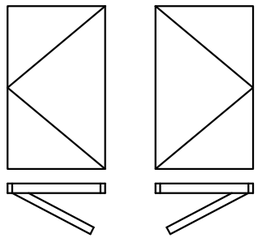

Left Hand Lock Set — Right Hand Lock Set

Outside

Handle With Large Backplate Guide

Ext. Handle	Int. Handle	Spindle	Cylinder	Screw
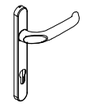	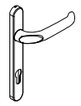	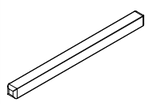	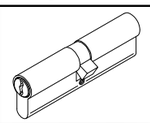	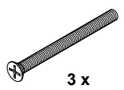 3 x
ACSZ800	ACSZ801	ACMX309 Sq. Spindle 130mm	ACMX0030 Half Cylinder	ACMX861 M5 x 75mm
	ACSZ803			
	ACSZ830 T			
ACSZ802	ACSZ803		ACMX01613 30/55 Cylinder	
	ACSZ830			
ACSZ400 + 2 x ACVS061	ACSZ803	ACMX008 Sq. Spindle 60mm	ACMX01613 30/55 Cylinder	ACVS061 M5 x 40mm
	ACSZ830			

Handle with Small Backplate Guide

Ext. Handle	Ext. Escutcheon	Int. Handle	Int. Escutcheon	Spindle	Cylinder	Screw
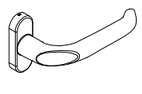	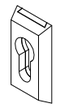	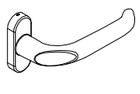	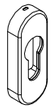	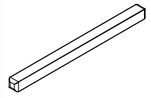	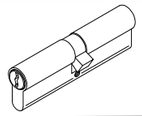	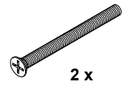 2 x
ACSZ837	ACSZ400	ACSZ836	ACMX208	ACMX309 Sq. Spindle 130mm	ACMX01613	ACMX861 M5 x 75mm
					ACMX0030	
	ACSZ400			ACMX008 Sq. Spindle 60mm	ACMX01613	ACVS061 M5 x 40mm
					ACMX0030	
ACSZ837	ACSZ400	ACSZ827 T		ACMX309 Sq. Spindle 130mm	ACMX01613	ACMX861 M5 x 75mm
					ACMX0030	
	2 X ACVS061		2 X DIN965 M5 X 20			

For PAS24 accessory options, please see page E48

EF424 - EF425

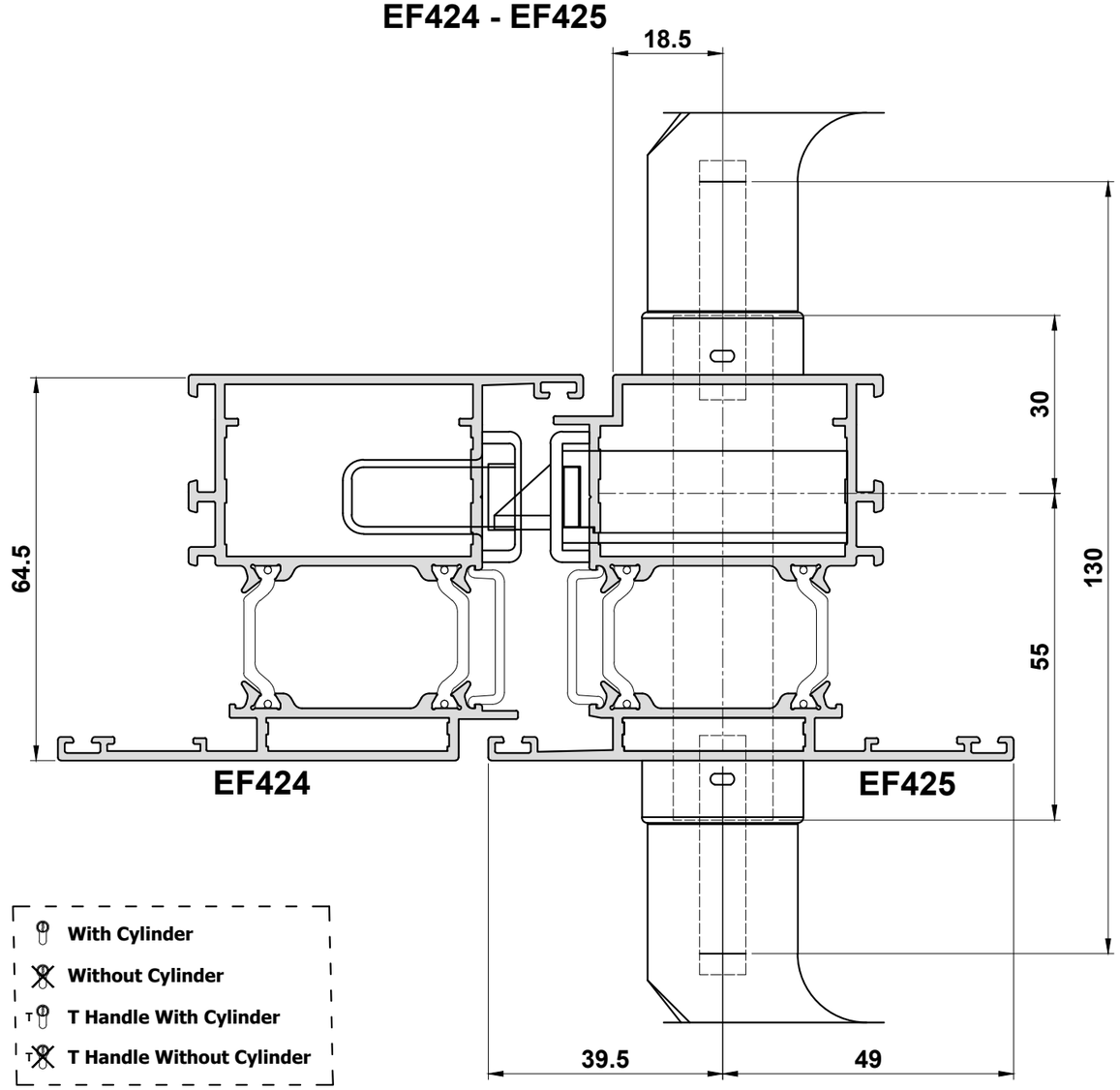

With Cylinder

Without Cylinder

T Handle With Cylinder

T Handle Without Cylinder

Do Not Scale From This Drawing

ACSZ550/551/552 Preparation for EF425

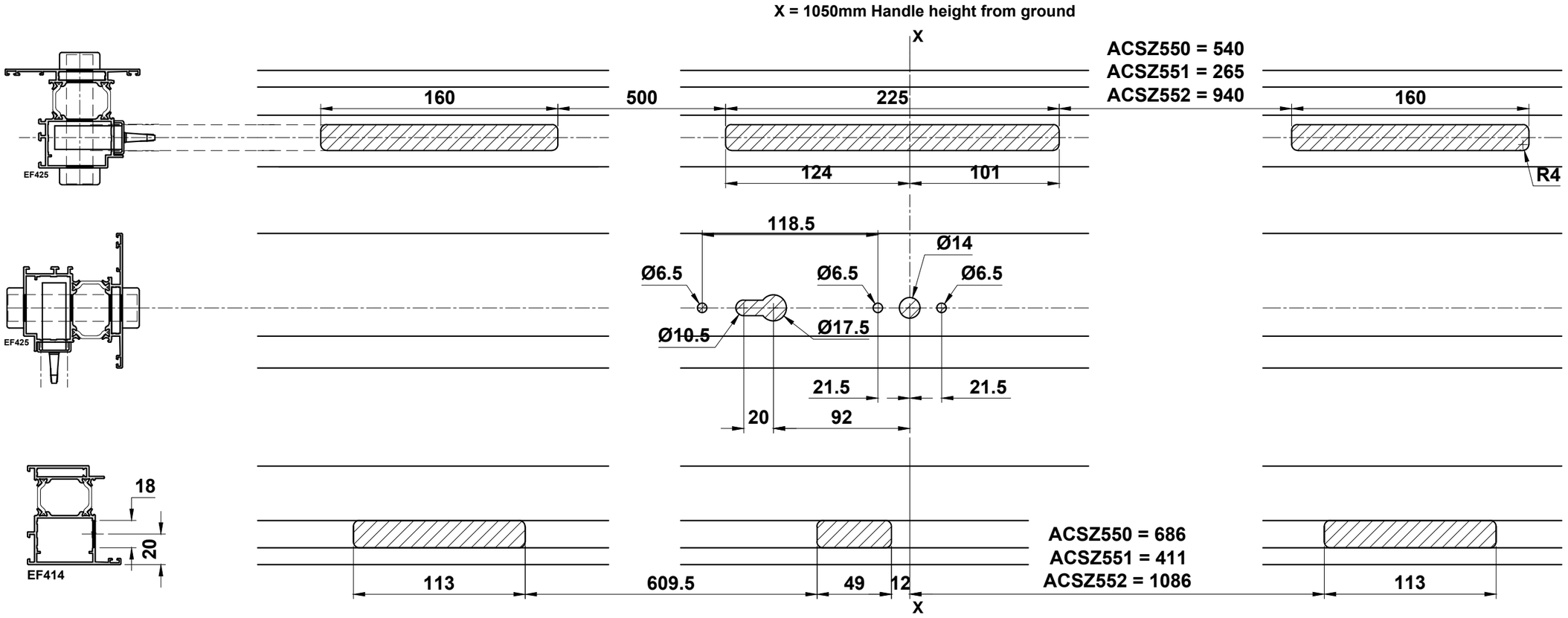

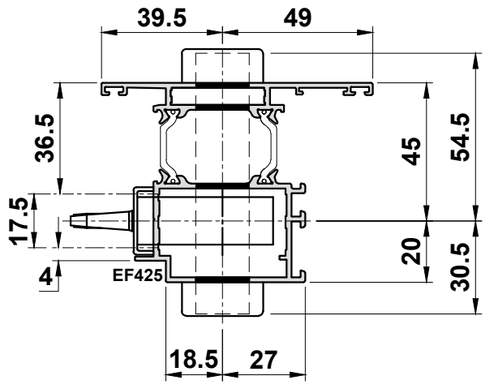

Do Not Scale From This Drawing

Double Door Assembly with ACEF891 Shootbolt

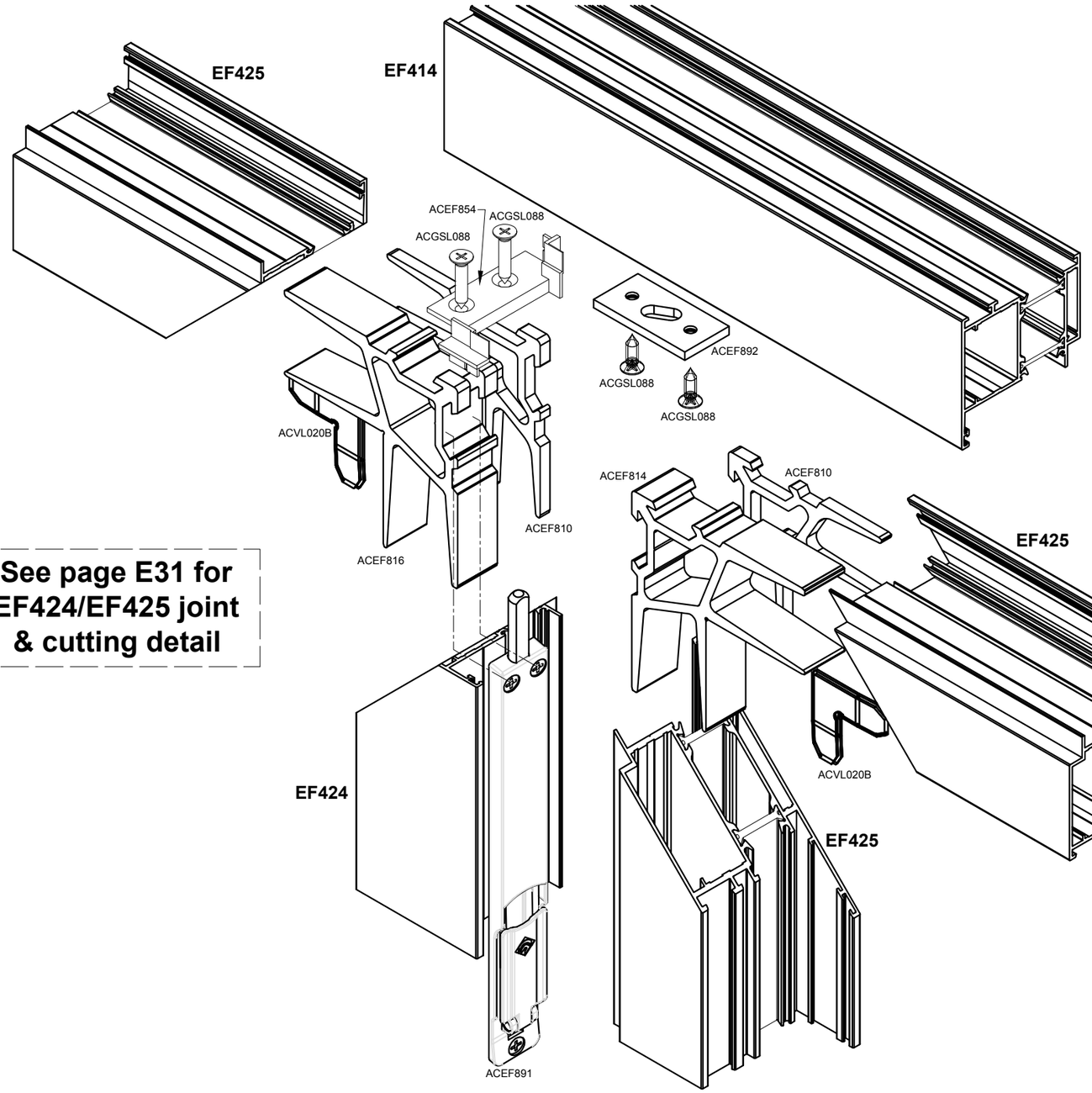

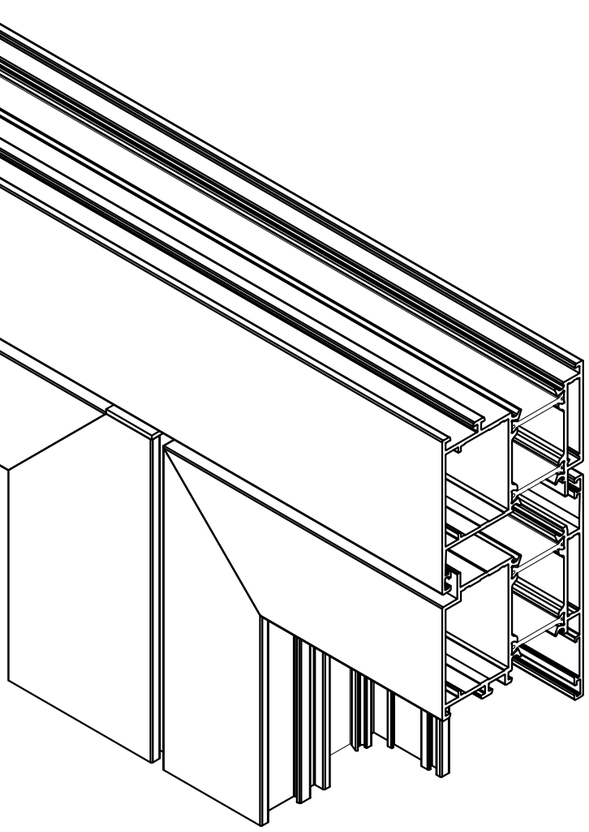

See page E31 for EF424/EF425 joint & cutting detail

Do Not Scale From This Drawing

Double Door Assembly with ACEF891 Shootbolt

See page E31 for EF424/EF425 joint & cutting detail

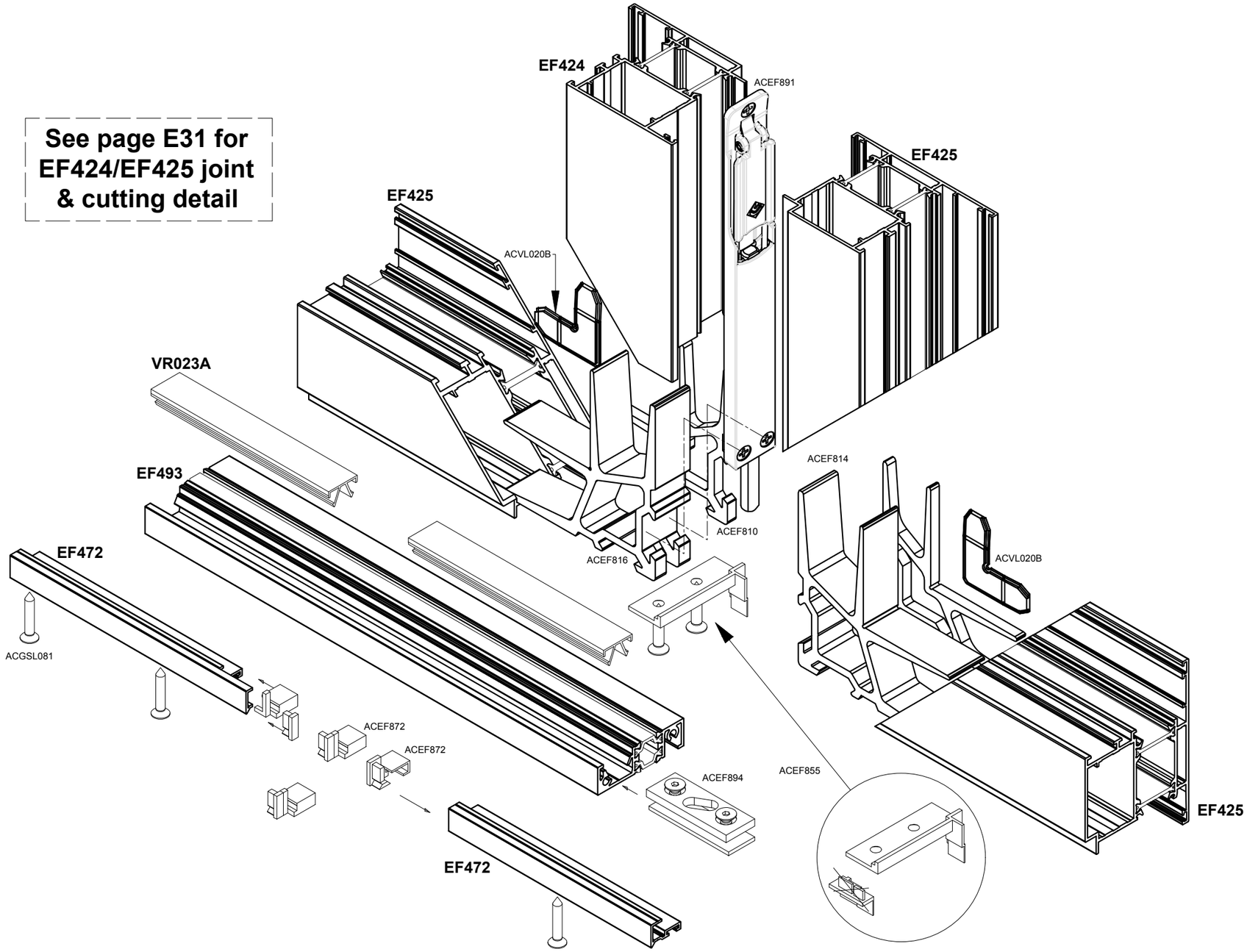

Do Not Scale From This Drawing

Double Door without Threshold

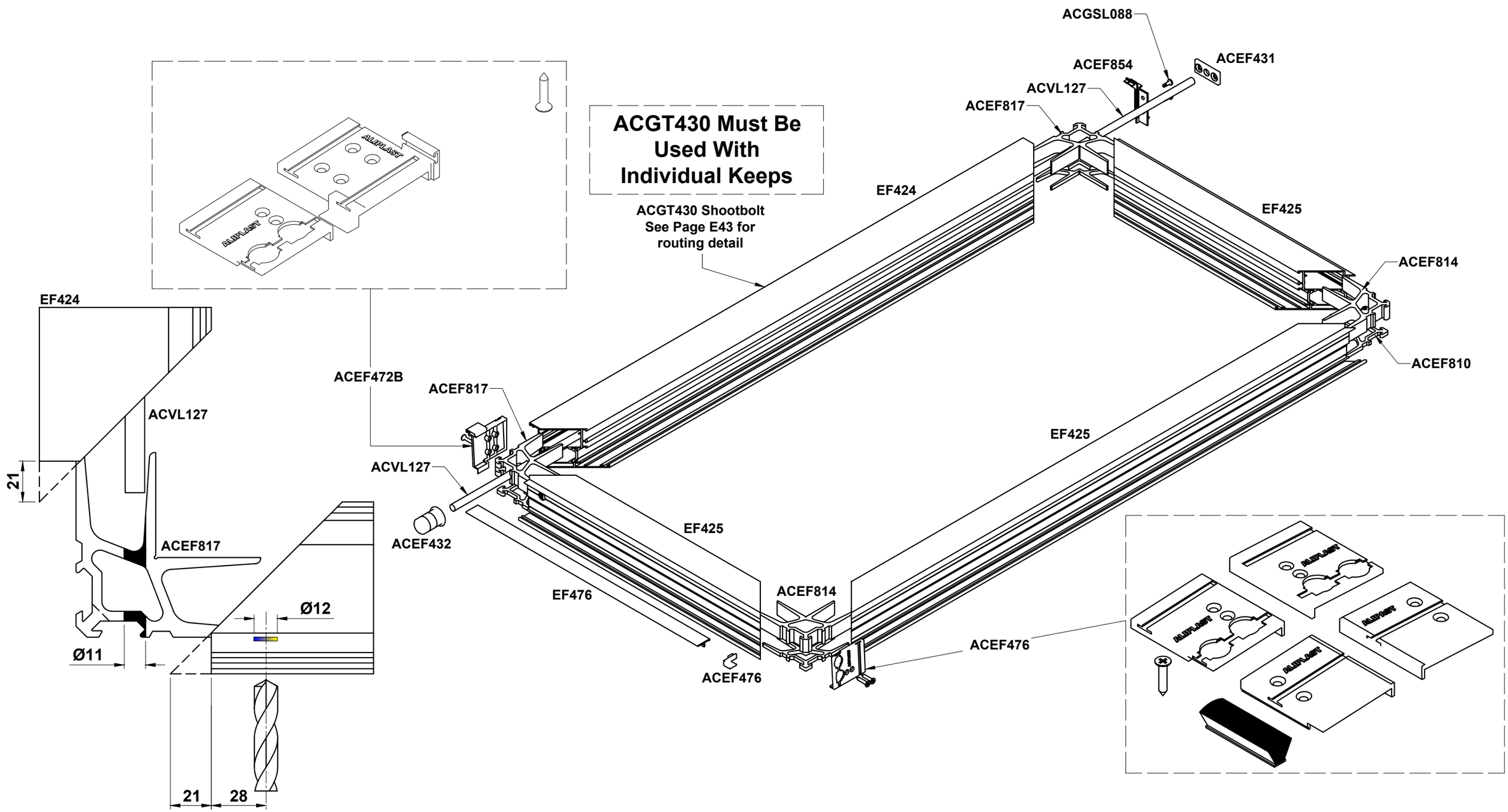

ACGT430 Routing Detail

ACGT430 Must Be Used With Individual Keeps

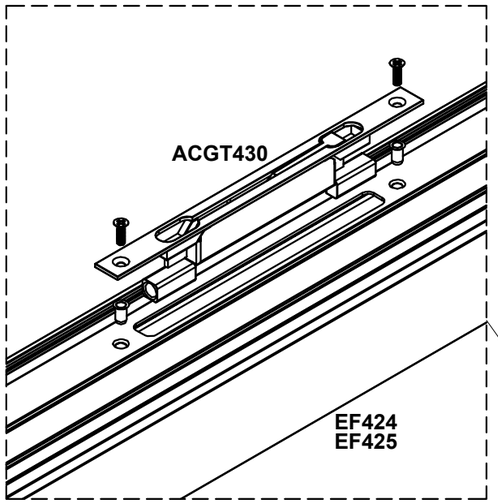

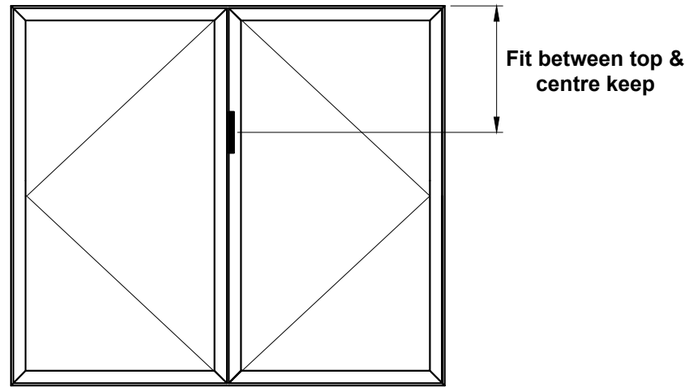

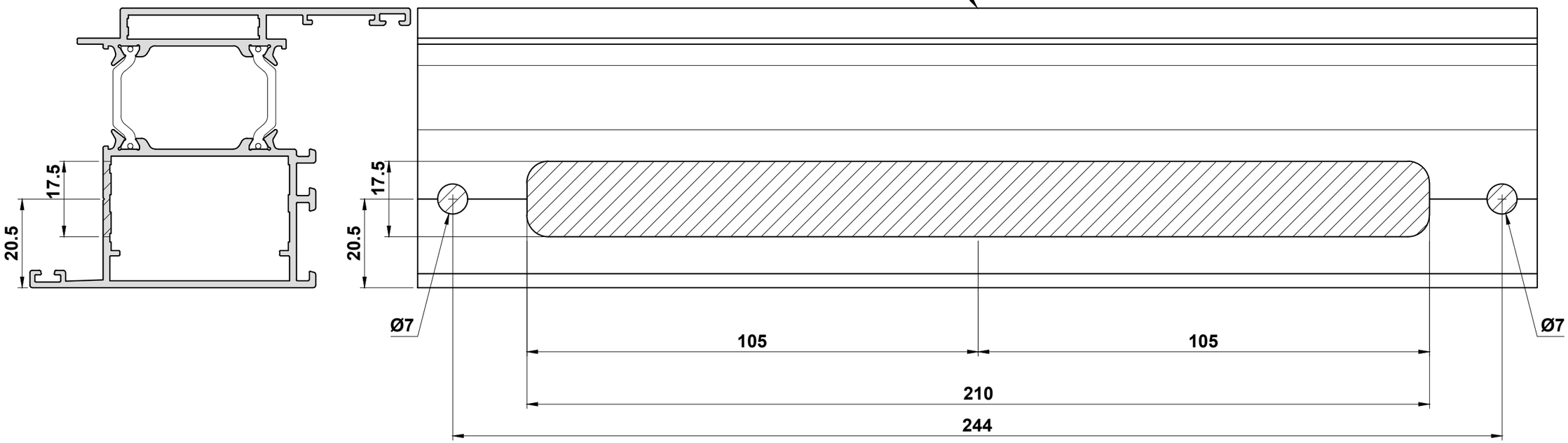

Do Not Scale From This Drawing

ACMX05050 Horizontal Panic Bar

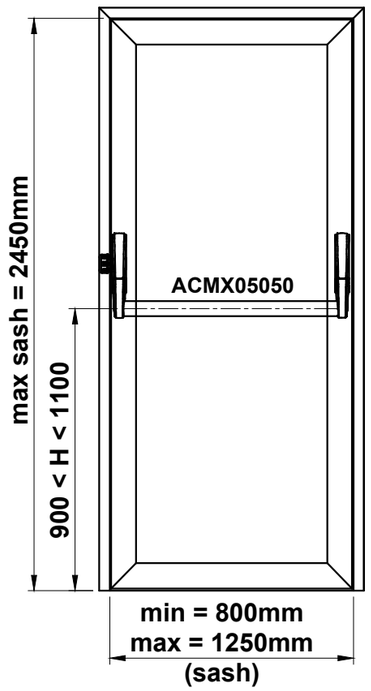

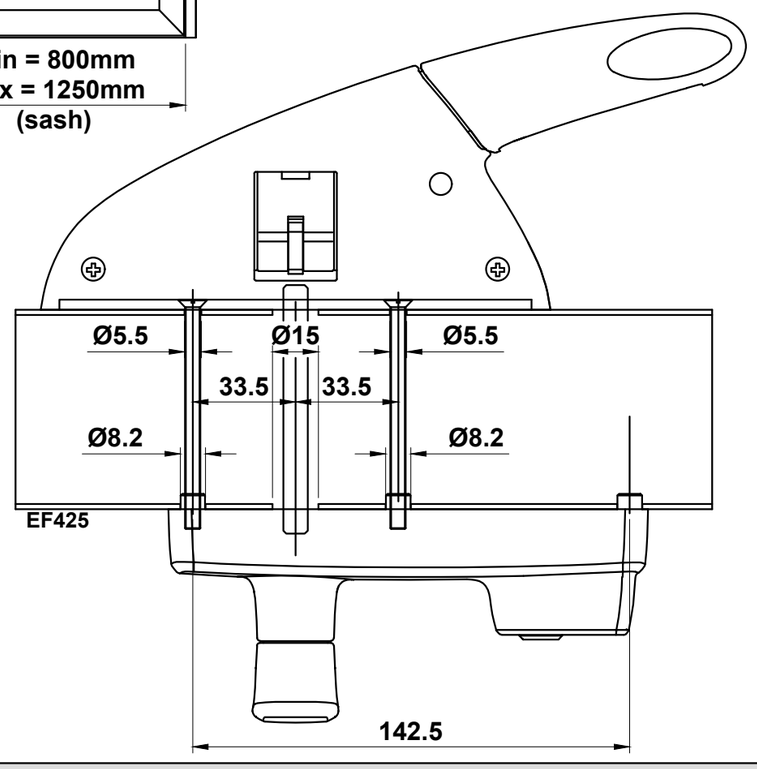

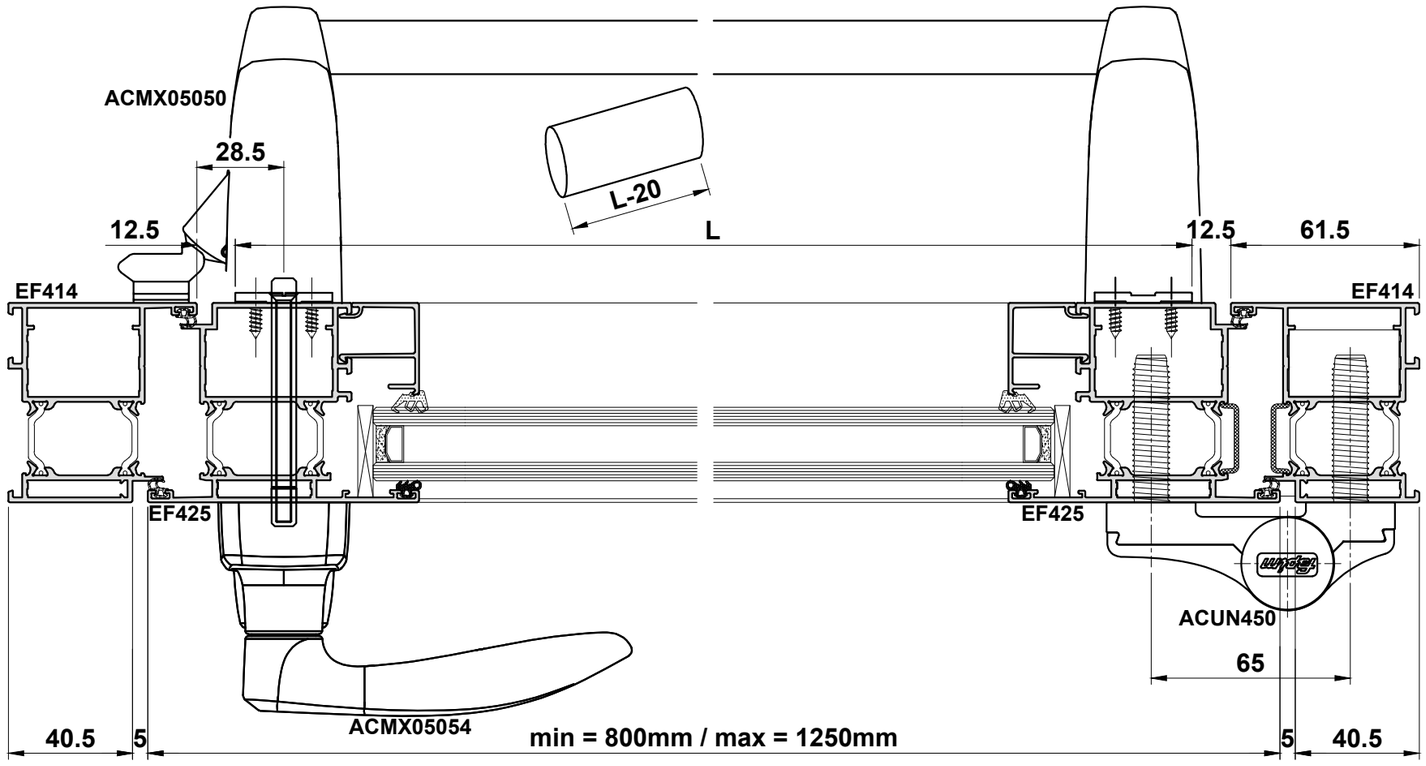

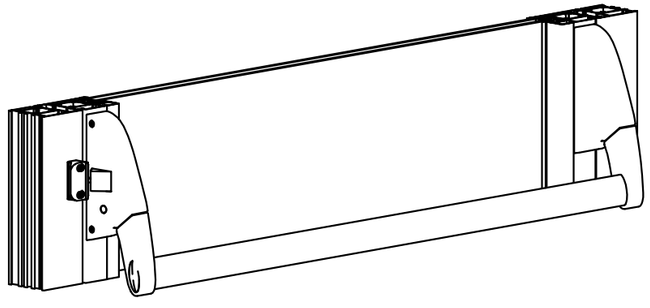

Do Not Scale From This Drawing

ACMX05052 Vertical Panic Bar

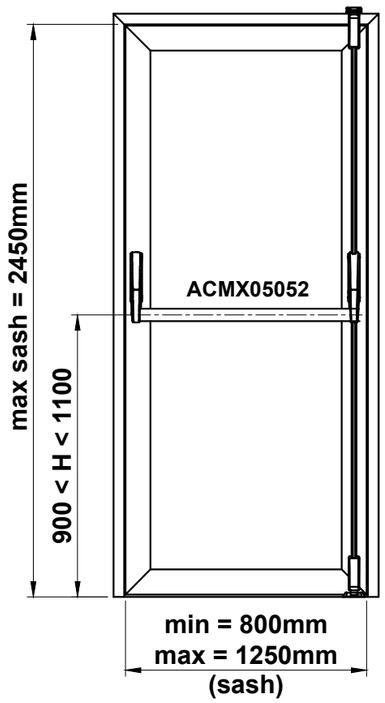

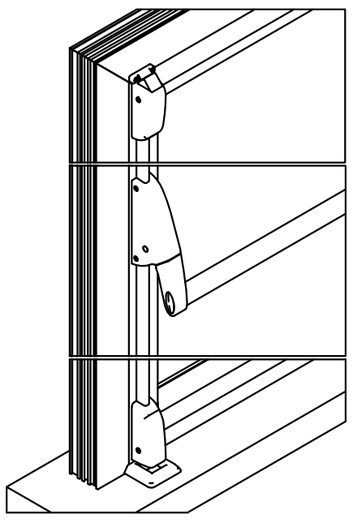

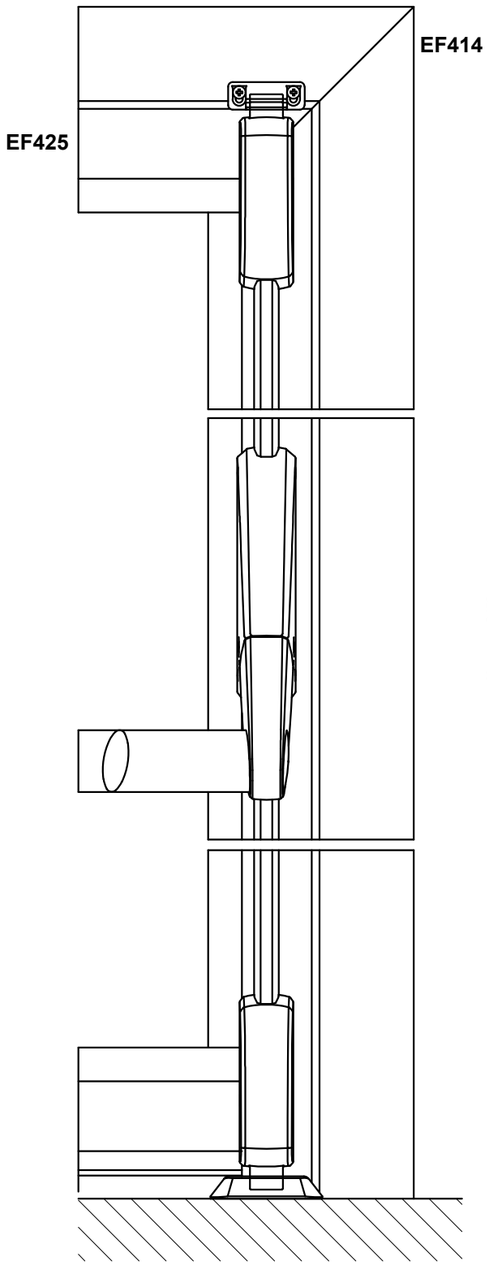

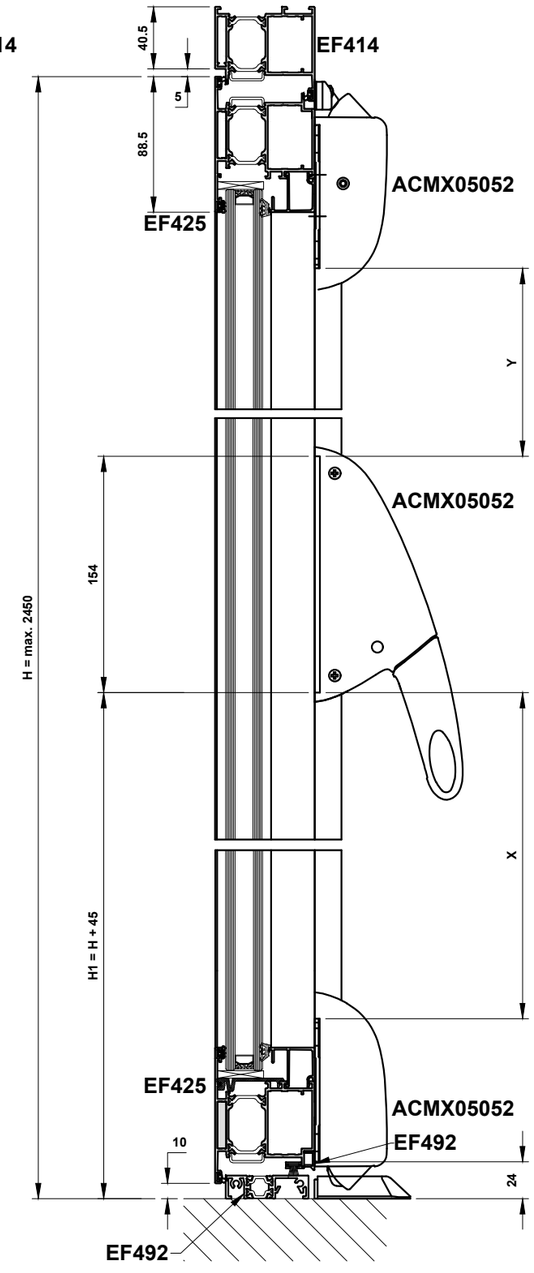

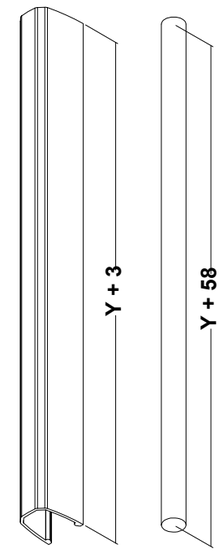

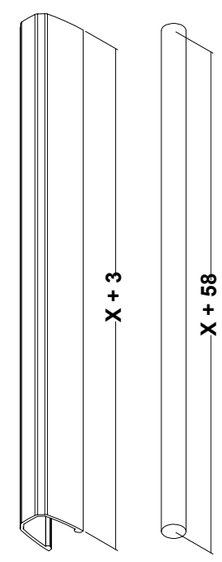

Do Not Scale From This Drawing

ACMX05060 Horizontal Panic Pad

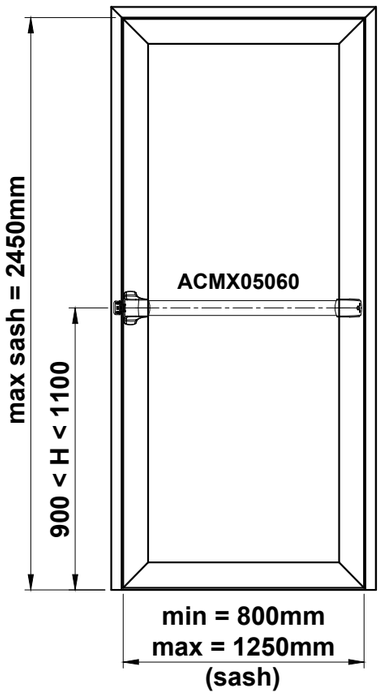

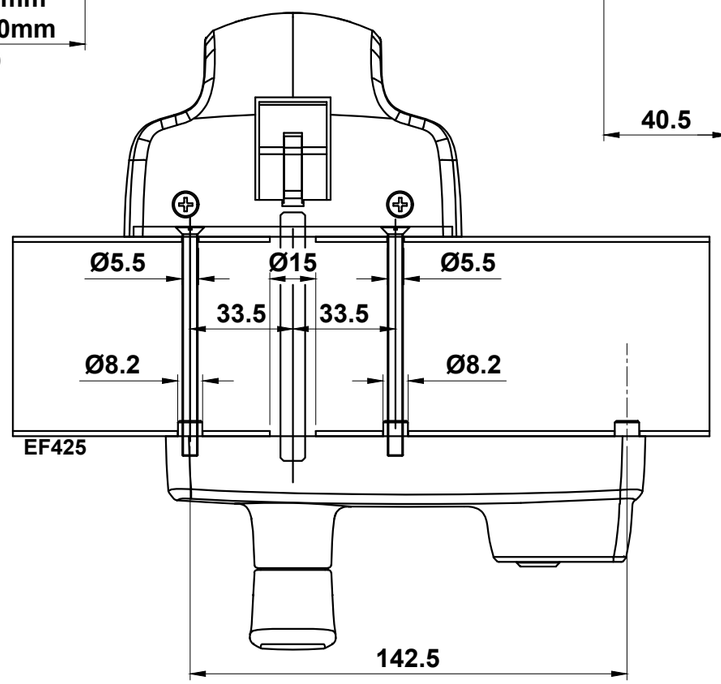

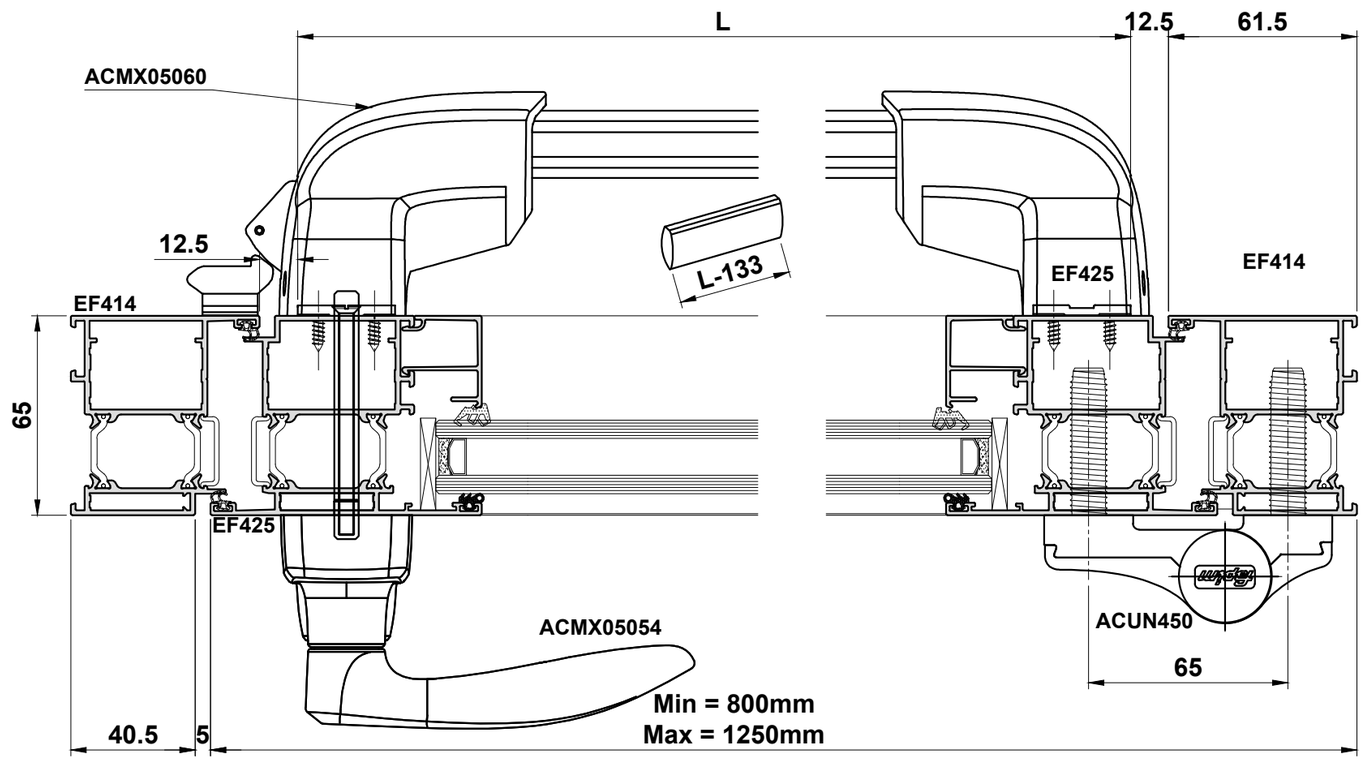

Do Not Scale From This Drawing

ACMX05062 Vertical Panic Pad

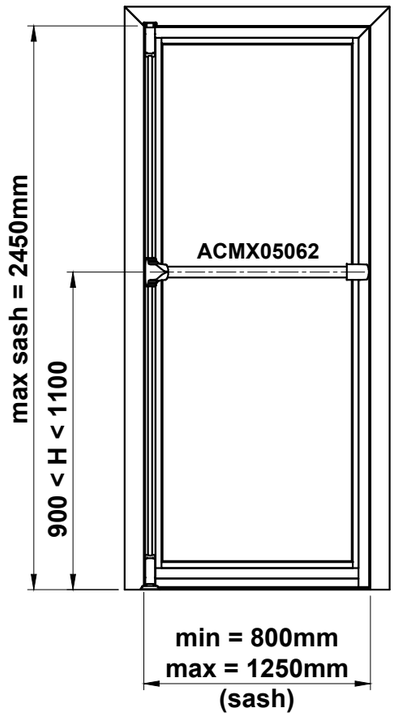

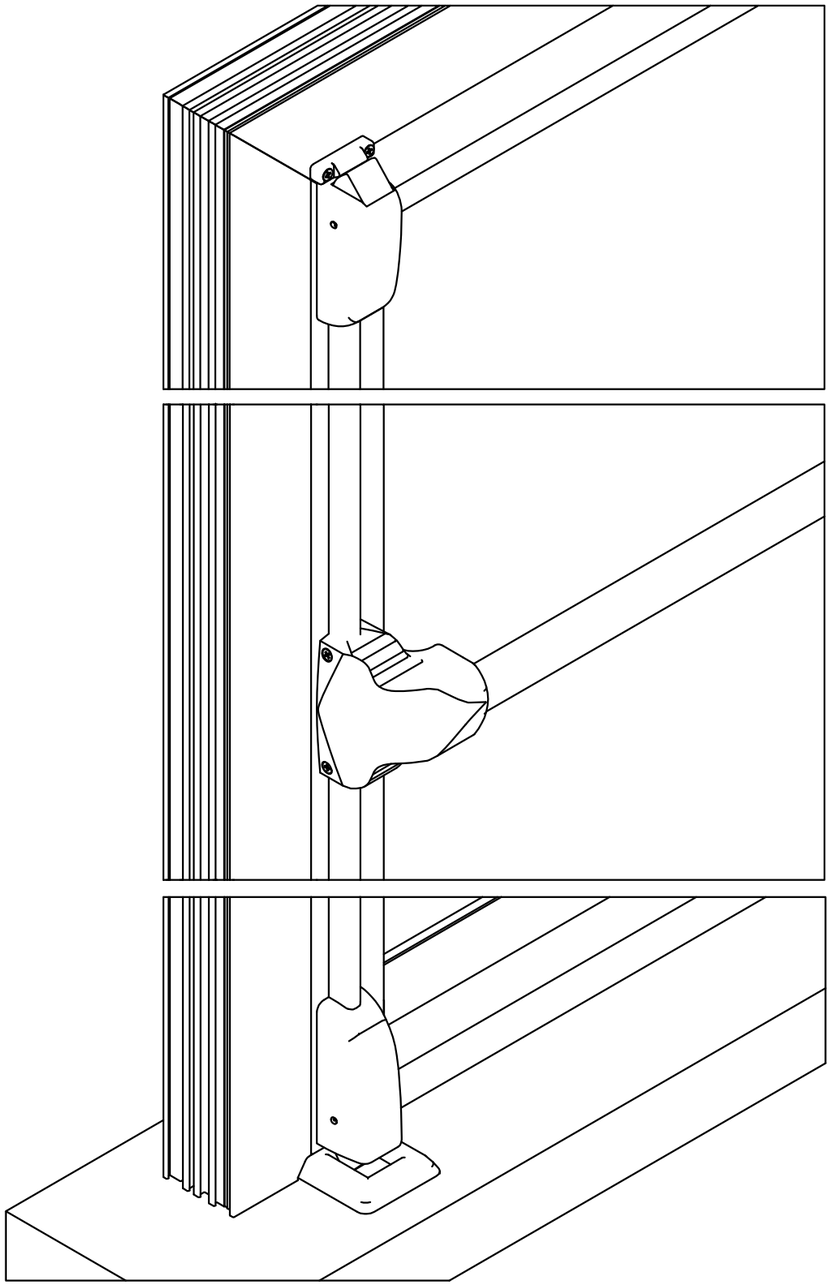

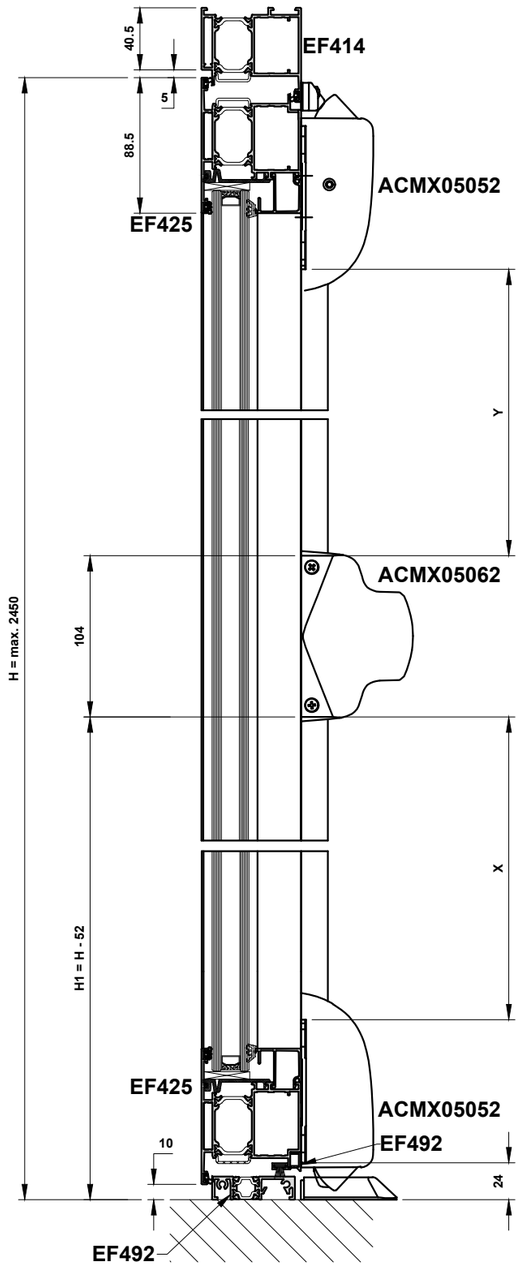

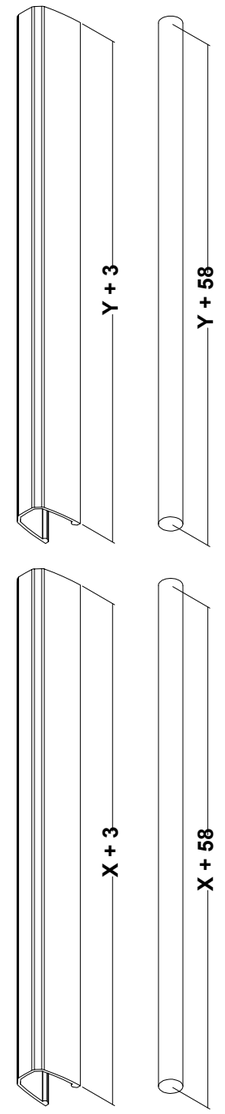

Do Not Scale From This Drawing

PAS24:2012 Overview - Flat Open In & Open Out Doors

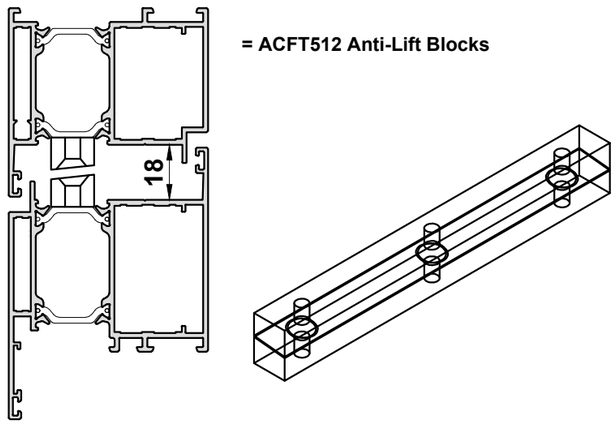

= ACFT512 Anti-Lift Blocks

= ACFT512 Anti-Lift Blocks

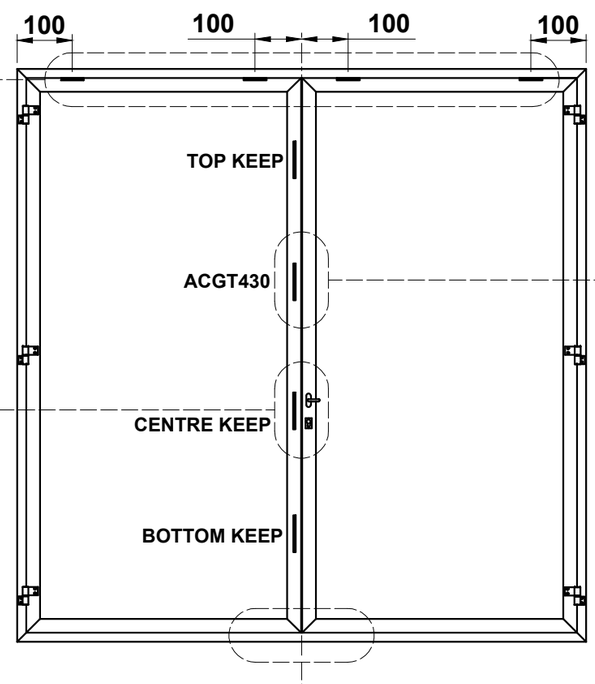

ACGT430 & ACEF961 with ACVL127 Rods

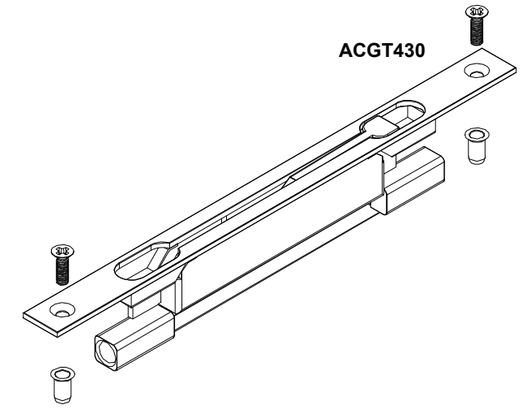

Lock Guide

Locks	Keeps	
	Middle	Top / Bottom
ACSZ550	ACSZ650(L/R)	ACSZ651
ACSZ551		
ACSZ552		

Keep Handing Guide

Viewed Externally

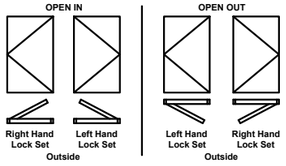

Handle with Small Backplate Guide

Ext. Handle	Ext. Escutcheon	Int. Handle	Int. Escutcheon	Spindle	Cylinder	Screw
						2 x
ACSZ837	ACSZ400	ACSZ836	ACMX208	ACMX309 Sq. Spindle 130mm	ACMX01613 / ACMX0030	ACMX861 M5 x 75mm
	ACSZ400			ACMX008 Sq. Spindle 60mm	ACMX01613 / ACMX0030	ACVS061 M5 x 40mm
ACSZ837	ACSZ400	ACSZ827		ACMX309 Sq. Spindle 130mm	ACMX01613 / ACMX0030	ACMX861 M5 x 75mm
	2 X ACVS061		2 X DIN965 M5 X 20			

The details on this page show the specific hardware required to achieve PAS24:2012. Hardware not shown is standard.

See page E67 for Glazing Bead selection.

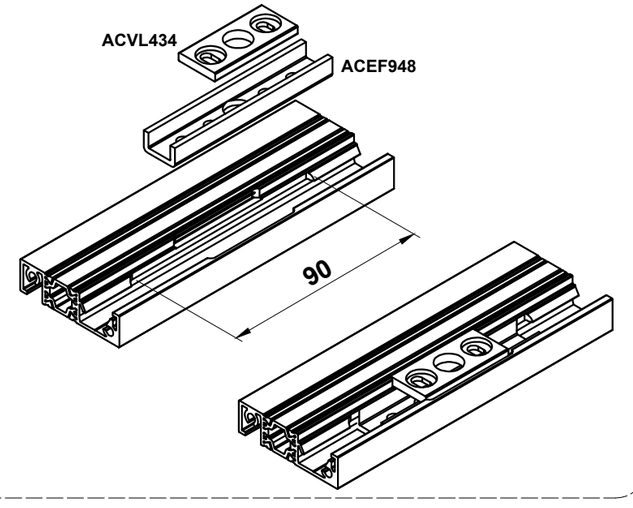

Do Not Scale From This Drawing

Stepped Door Low Threshold Joint Details

Open In

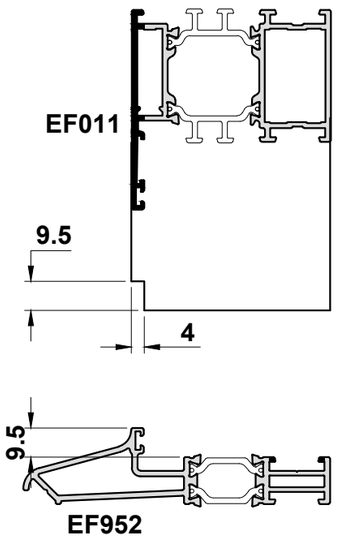

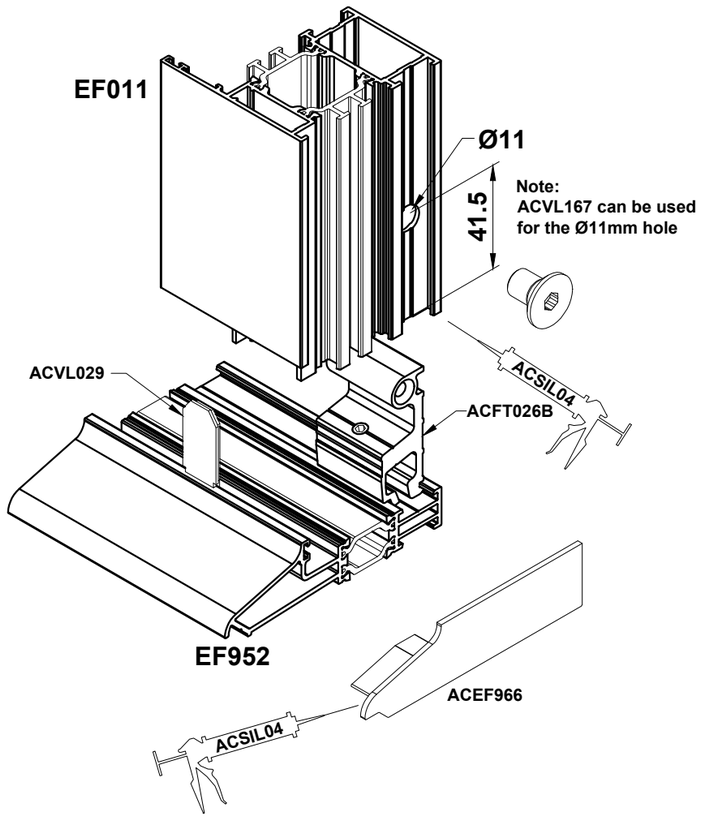

Open Out

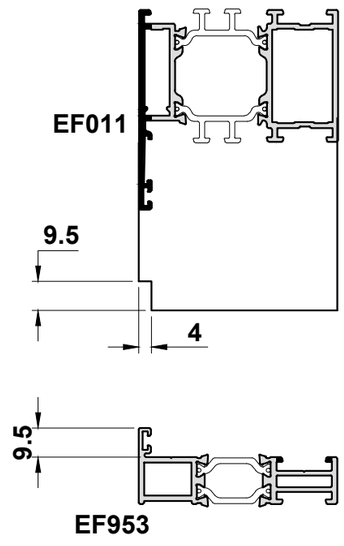

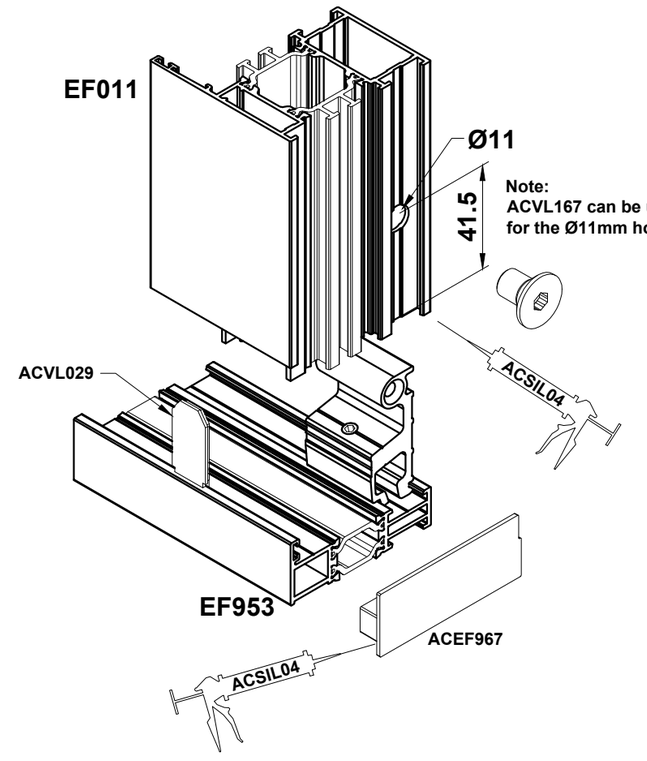

Note: The above connection details supersede ACEF094

Do Not Scale From This Drawing

Stepped Door Drainage Details

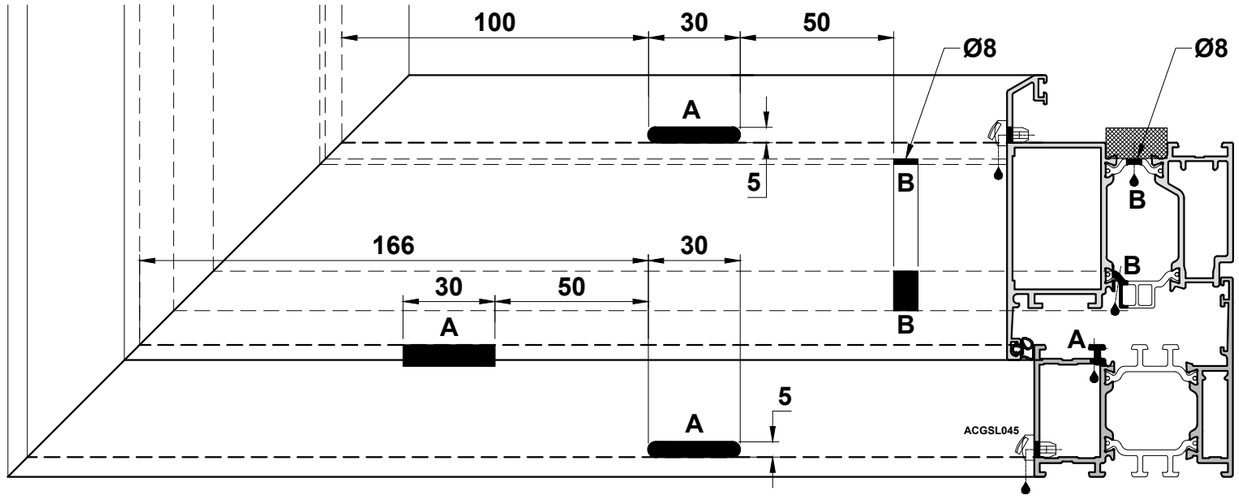

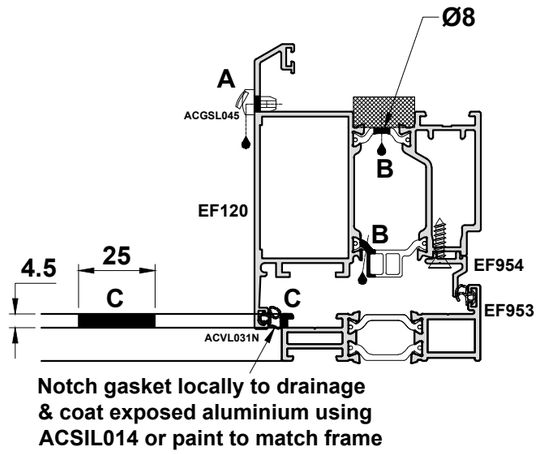

Notch gasket locally to drainage & coat exposed aluminium using ACSIL014 or paint to match frame

Pressure Equalization

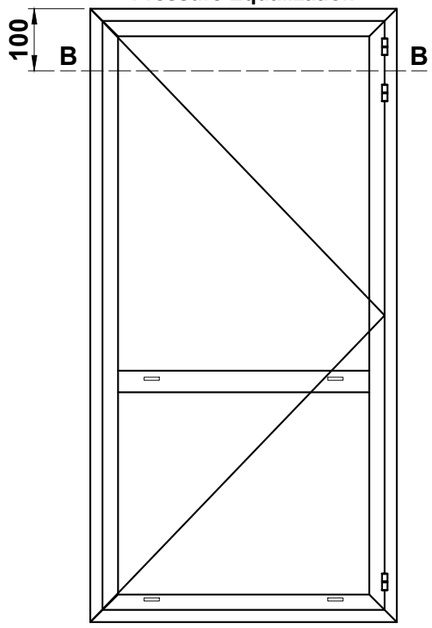

Drainage Slot Types

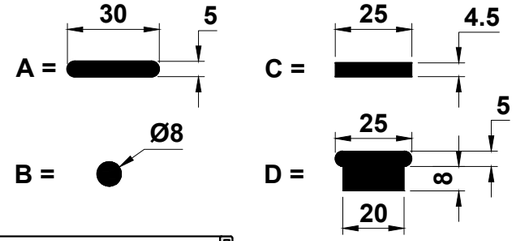

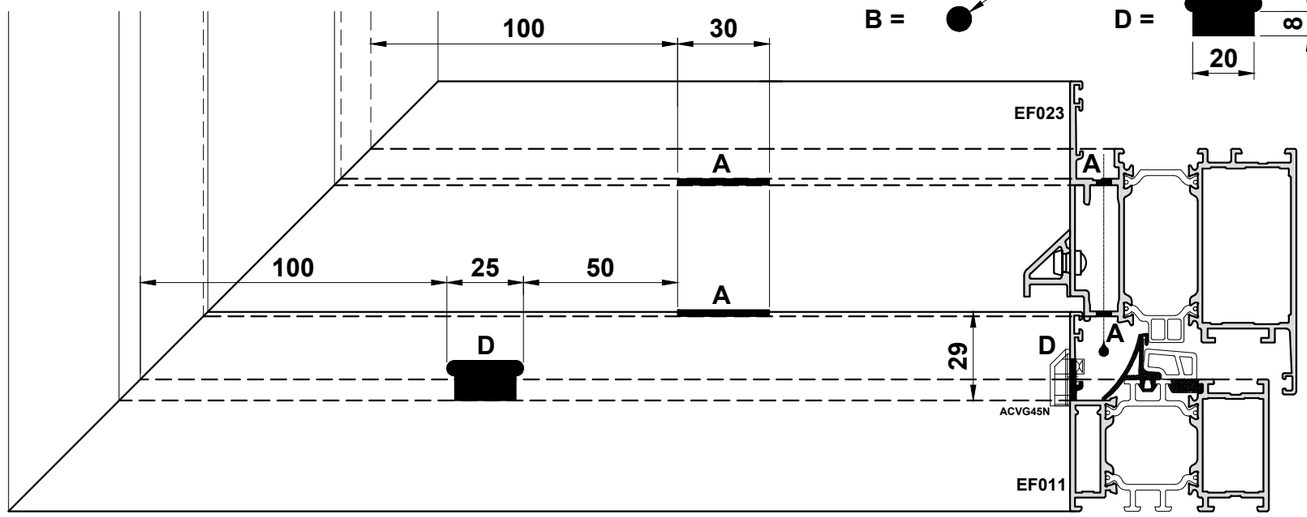

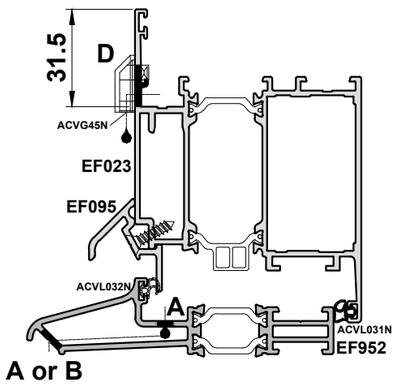

Do Not Scale From This Drawing

ACMX102 Two-Part Hinge Details

Residential - without closer

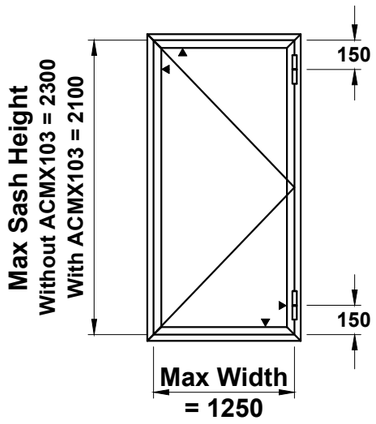

Max Weight = 90kg

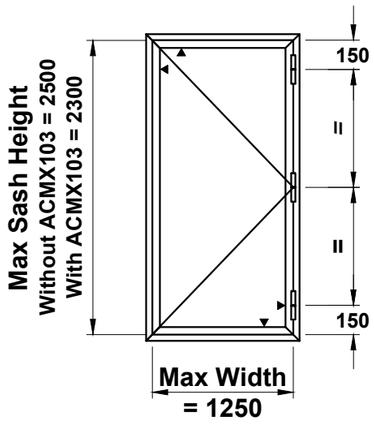

Max Weight = 90kg

Light Commercial - without closer

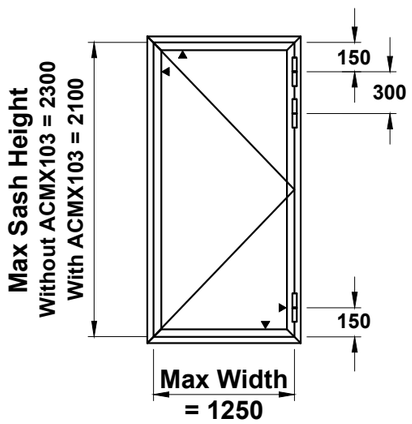

Max Weight = 120kg

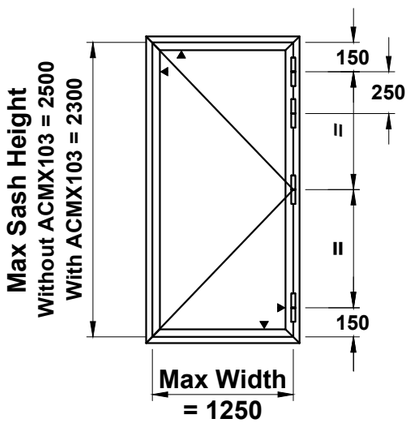

Max Weight = 120kg

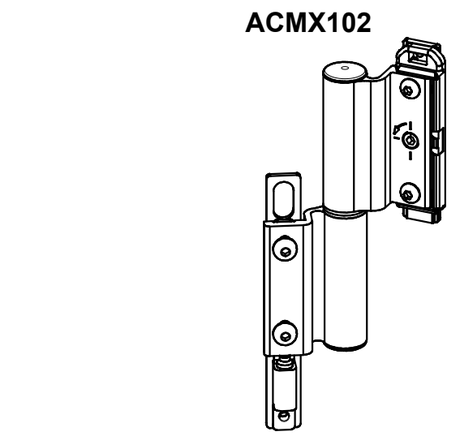

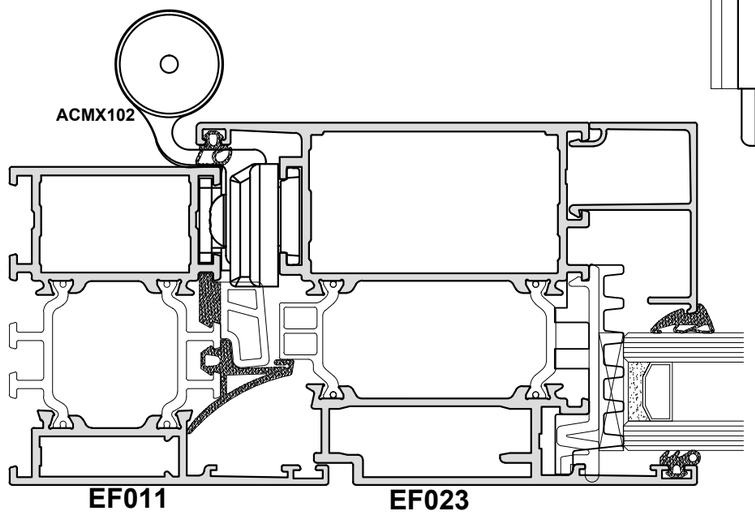

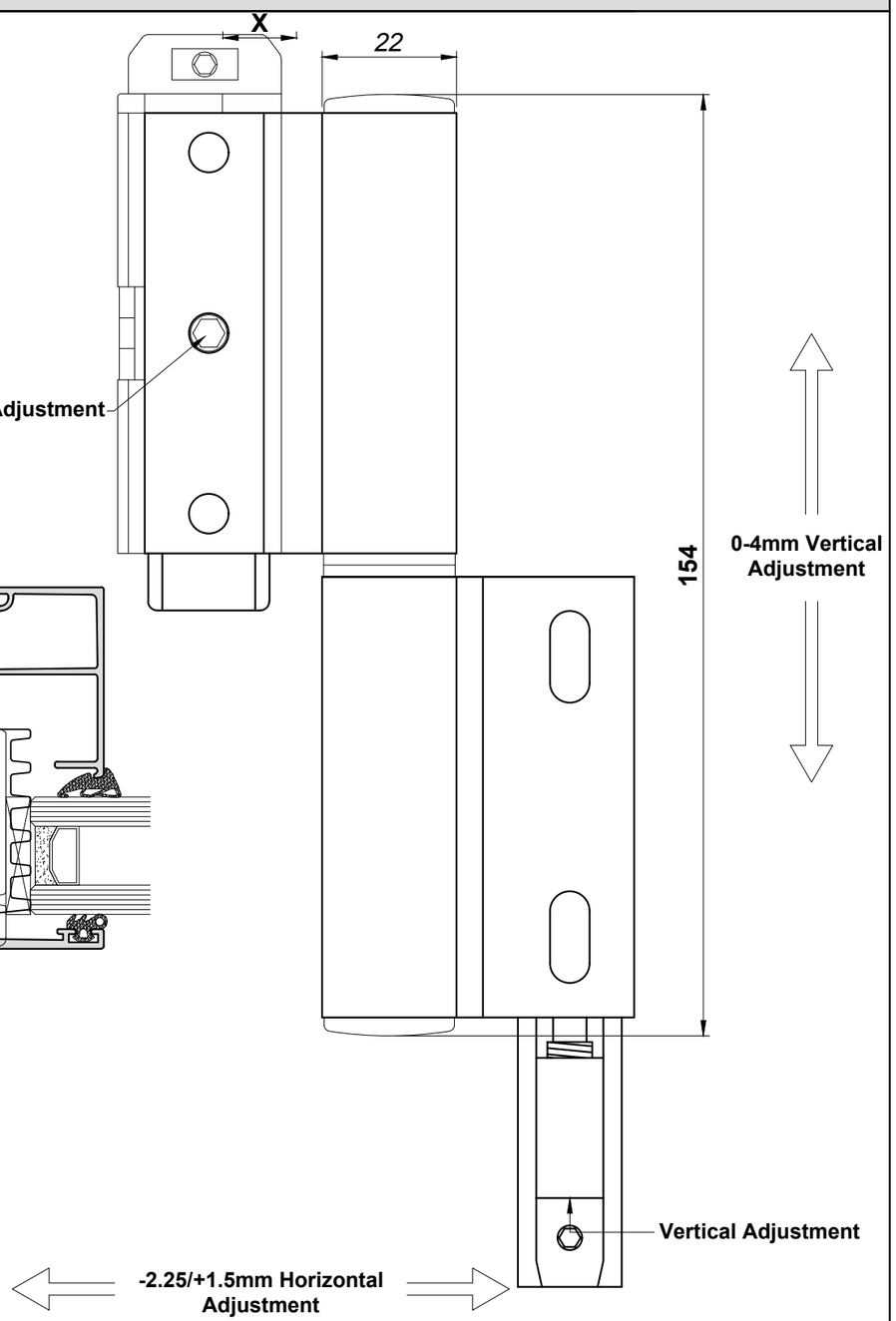

Do Not Scale From This Drawing

ACUN102 Three-Part Hinge Details

Residential - without closer

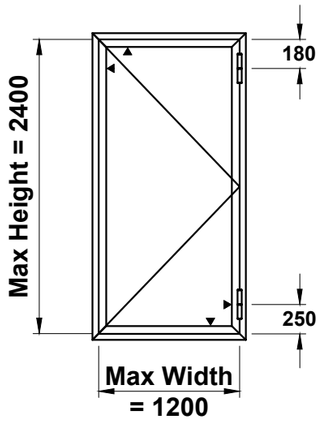

Min Height to Width Ratio = 1.4
Max Weight = 90kg

Min Height to Width Ratio = 1.85
Max Weight = 120kg

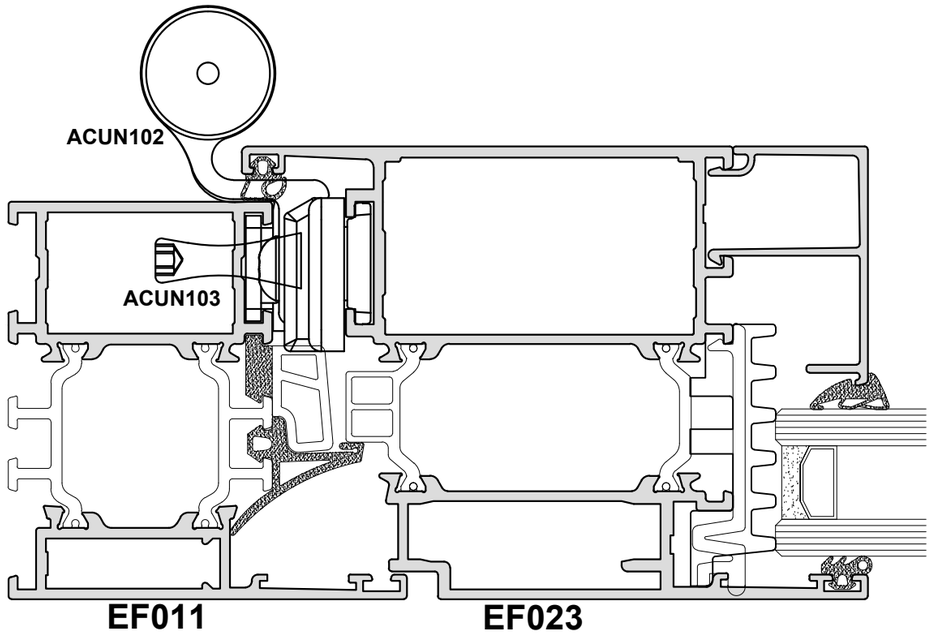

ACUN102

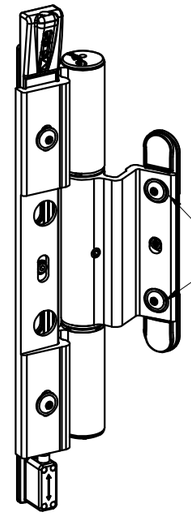

Replace screws with ACUN103 pins for increased security

See two-part hinge for adjustment details

Light Commercial - with closer

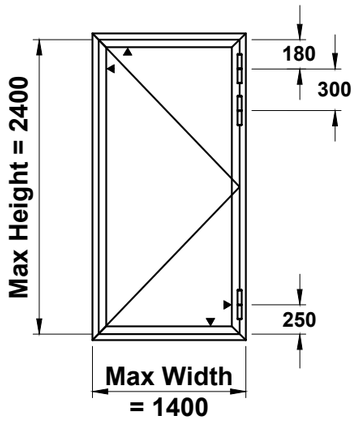

Min Height to Width Ratio = 1.4
Max Weight = 90kg

Min Height to Width Ratio = 1.6
Max Weight = 120kg

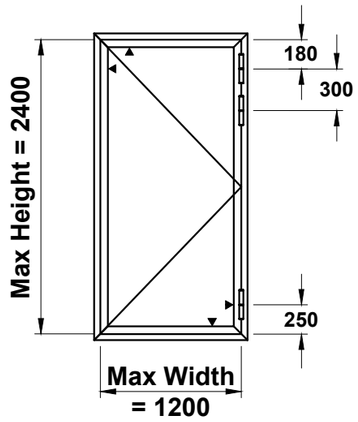

Min Height to Width Ratio = 1.6
Max Weight = 150kg

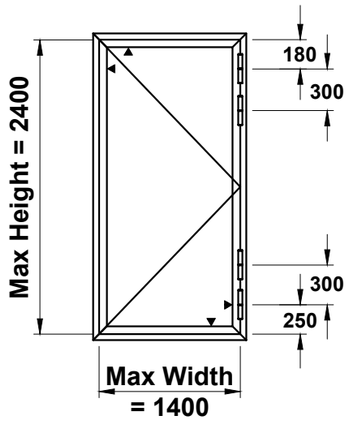

Min Height to Width Ratio = 1.6
Max Weight = 150kg

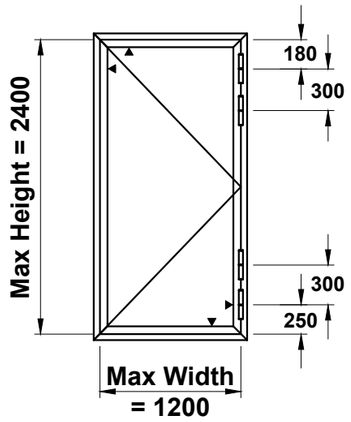

Min Height to Width Ratio = 1.9
Max Weight = 180kg

ACUN103 Security Pin Preparation
(Required for PAS24:2012)

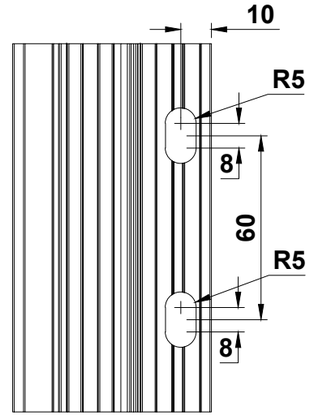

Do Not Scale From This Drawing

ACMX102 Hinge with ACMX103 Security Pin Preparation

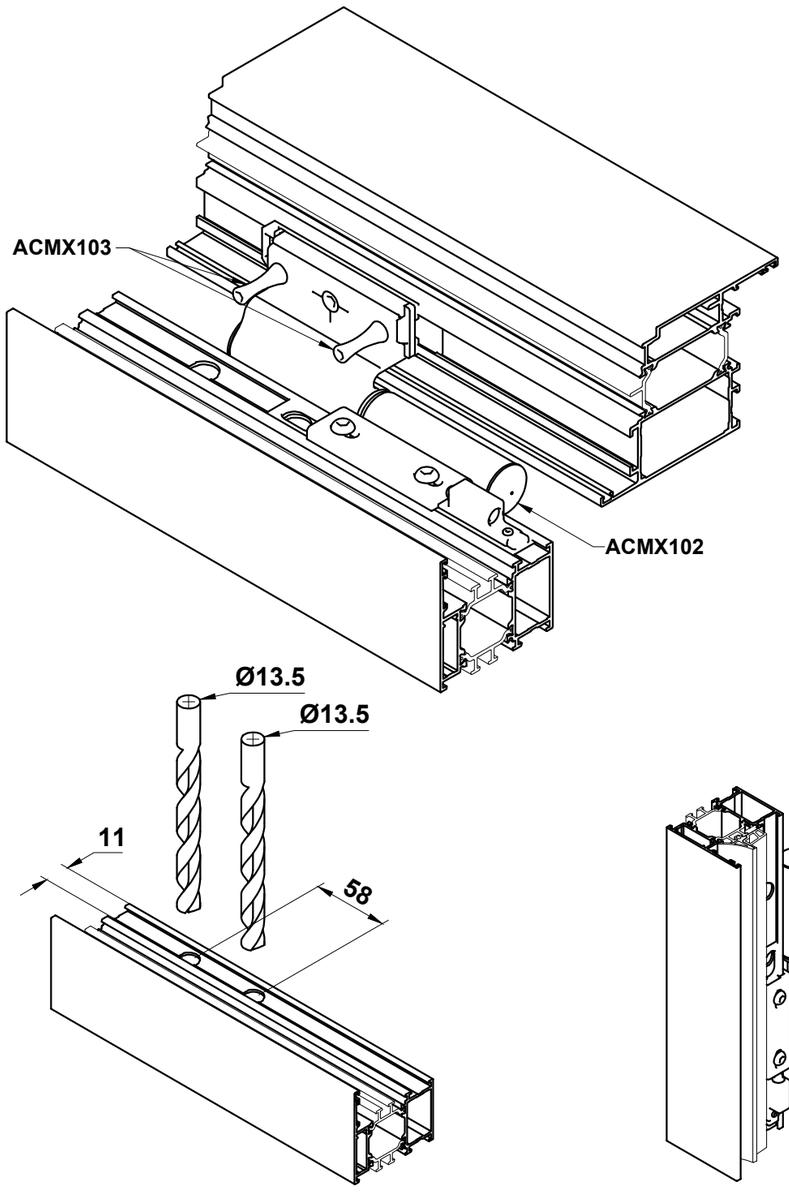

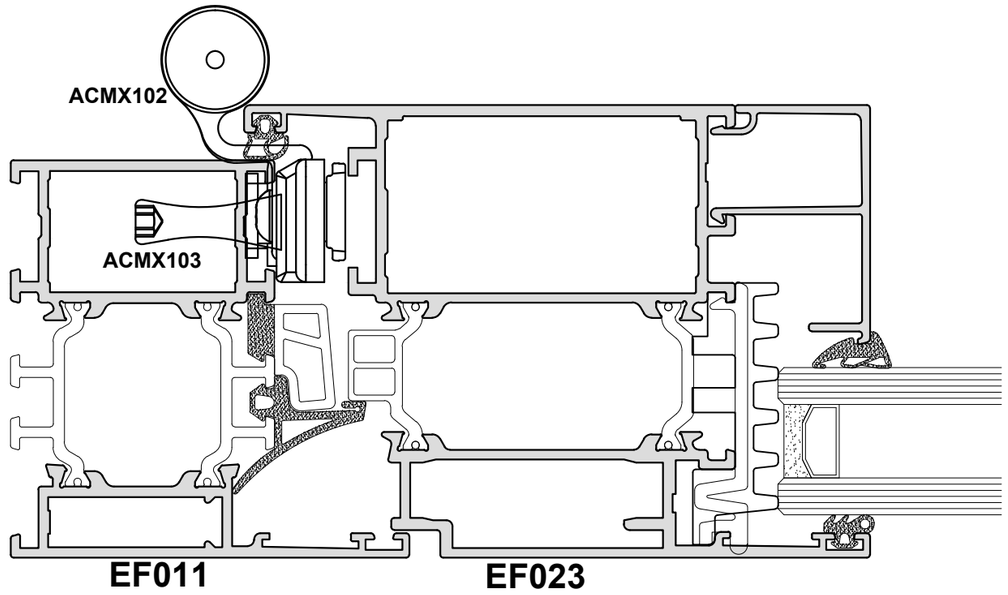

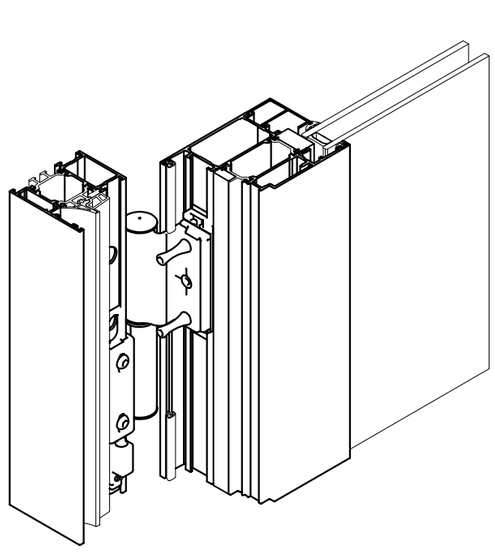

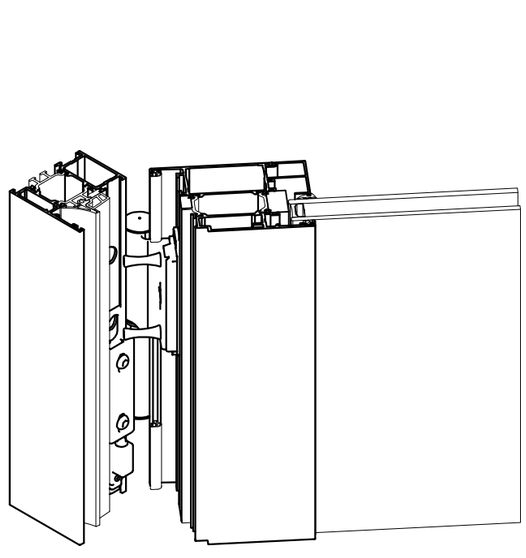

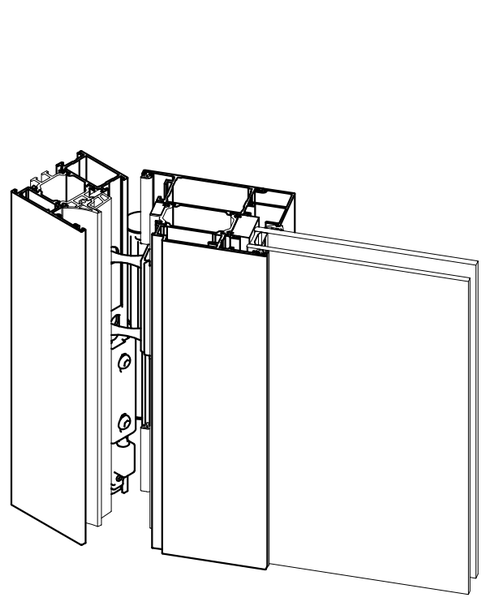

Do Not Scale From This Drawing

Stepped Door - Locking Options

Lock Guide

Sash Height	Locks	Keeps		
		Middle	Top / Bottom	Continuous
2100-2300	ACSZ510	ACSZ650R	ACSZ651	ACSZ680R
1825-2100	ACSZ511			ACSZ681R
2300-2500	ACSZ512			ACSZ682R
1 Point Lock	ACSZ515			

Keep Handing Guide

Viewed Externally

OPEN IN

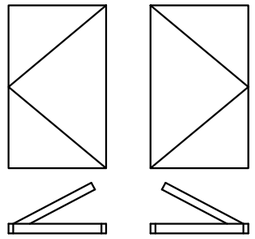

Right Hand Lock Set — Left Hand Lock Set

Outside

OPEN OUT

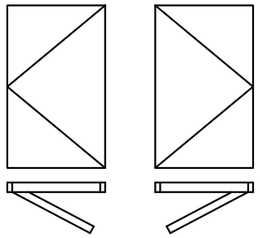

Left Hand Lock Set — Right Hand Lock Set

Outside

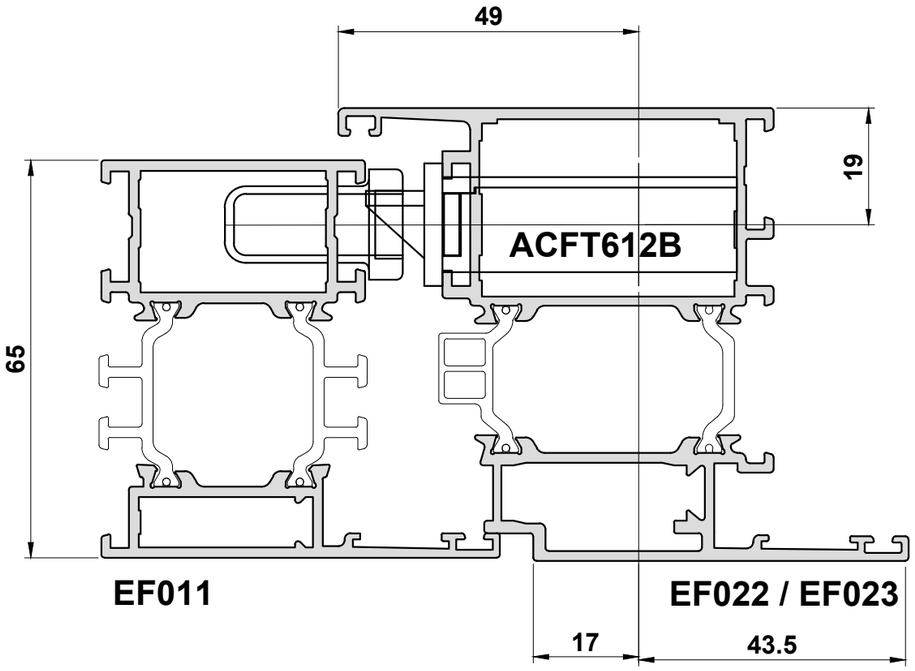

Handle With Large Backplate Guide

Ext. Handle	Int. Handle	Spindle	Cylinder	Screw
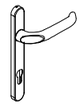	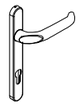	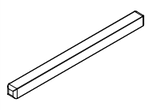	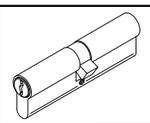	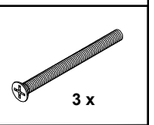 3 x
ACSZ800	ACSZ801 ACSZ803 ACSZ830 T	ACMX309 Sq. Spindle 130mm	ACMX0030 Half Cylinder	ACMX861 M5 x 75mm
ACSZ802	ACSZ803 ACSZ830		ACMX01613 30/55 Cylinder	
ACSZ400 + 2 x ACVS061	ACSZ803 ACSZ830	ACMX008 Sq. Spindle 60mm	ACMX01613 30/55 Cylinder	ACVS061 M5 x 40mm

Handle with Small Backplate Guide

Ext. Handle	Ext. Escutcheon	Int. Handle	Int. Escutcheon	Spindle	Cylinder	Screw
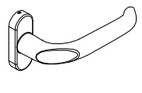	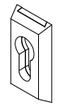	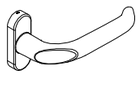	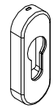	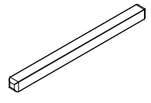	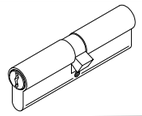	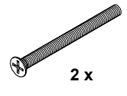 2 x
ACSZ837	ACSZ400	ACSZ836	ACMX208	ACMX309 Sq. Spindle 130mm	ACMX01613 ACMX0030	ACMX861 M5 x 75mm
	ACSZ400			ACMX008 Sq. Spindle 60mm	ACMX01613 ACMX0030	ACVS061 M5 x 40mm
ACSZ837	ACSZ400	ACSZ827 T		ACMX309 Sq. Spindle 130mm	ACMX01613 ACMX0030	ACMX861 M5 x 75mm
	2 X ACVS061		2 X DIN965 M5 X 20			

With Cylinder

Without Cylinder

T Handle With Cylinder

T Handle Without Cylinder

For PAS24 accessory options, please see page E64

Do Not Scale From This Drawing

Stepped Door - Locking Options

Lock Guide

Sash Height	Locks	Keeps		
		Middle	Top / Bottom	Continuous
2100-2300	ACSZ510	ACSZ650R	ACSZ651	ACSZ680R
1825-2100	ACSZ511			ACSZ681R
*2300-2500	ACSZ512			ACSZ682R
1 Point Lock	ACSZ515			

*If using AVCL432 shoot bolts, use ACSZ510 up to 2500mm sash height

Keep Handing Guide

Viewed Externally

OPEN IN

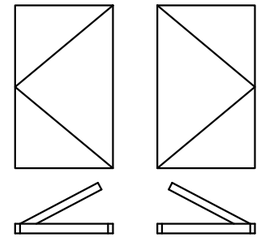

Right Hand Lock Set — Left Hand Lock Set

Outside

OPEN OUT

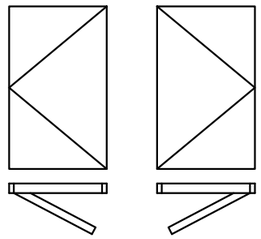

Left Hand Lock Set — Right Hand Lock Set

Outside

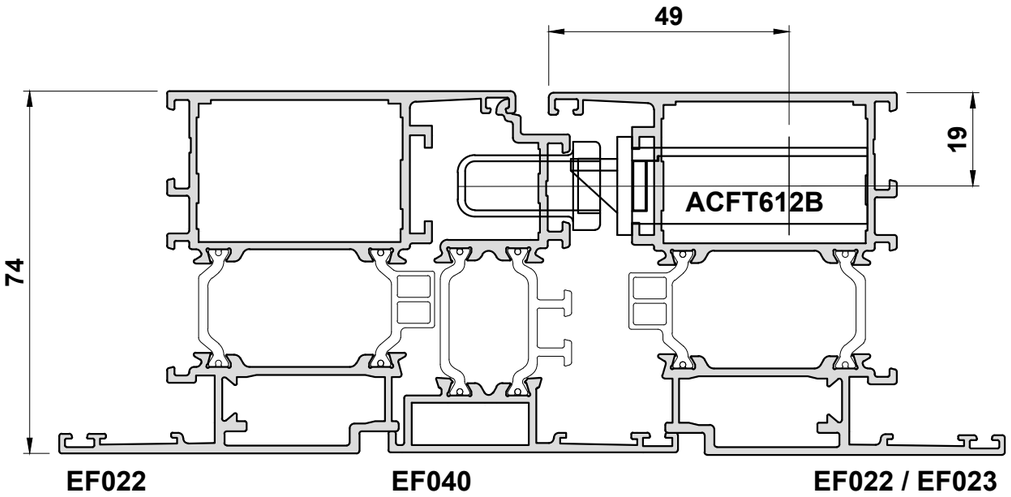

Handle With Large Backplate Guide

Ext. Handle	Int. Handle	Spindle	Cylinder	Screw
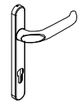	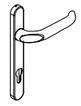	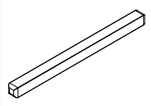	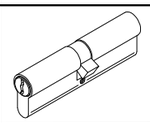	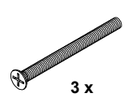 3 x
ACSZ800	ACSZ801	ACMX309 Sq. Spindle 130mm	ACMX0030 Half Cylinder	ACMX861 M5 x 75mm
	ACSZ803			
	ACSZ830 T			
ACSZ802	ACSZ803		ACMX01613 30/55 Cylinder	
	ACSZ830			
ACSZ400 + 2 x ACVS061	ACSZ803	ACMX008 Sq. Spindle 60mm	ACMX01613 30/55 Cylinder	ACVS061 M5 x 40mm
	ACSZ830			

Handle with Small Backplate Guide

Ext. Handle	Ext. Escutcheon	Int. Handle	Int. Escutcheon	Spindle	Cylinder	Screw
	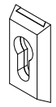		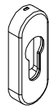	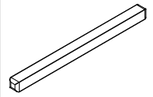	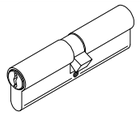	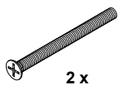 2 x
ACSZ837	ACSZ400	ACSZ836	ACMX208	ACMX309 Sq. Spindle 130mm	ACMX01613	ACMX861 M5 x 75mm
					ACMX0030	
	ACSZ400			ACMX008 Sq. Spindle 60mm	ACMX01613	ACVS061 M5 x 40mm
					ACMX0030	
ACSZ837	ACSZ400	ACSZ827 T		ACMX309 Sq. Spindle 130mm	ACMX01613	ACMX861 M5 x 75mm
					ACMX0030	
	2 X ACVS061		2 X DIN965 M5 X 20			

With Cylinder

Without Cylinder

T Handle With Cylinder

T Handle Without Cylinder

For PAS24 accessory options, please see page E64

Do Not Scale From This Drawing

ACSZ510/511/512 Preparation for EF022 & EF023

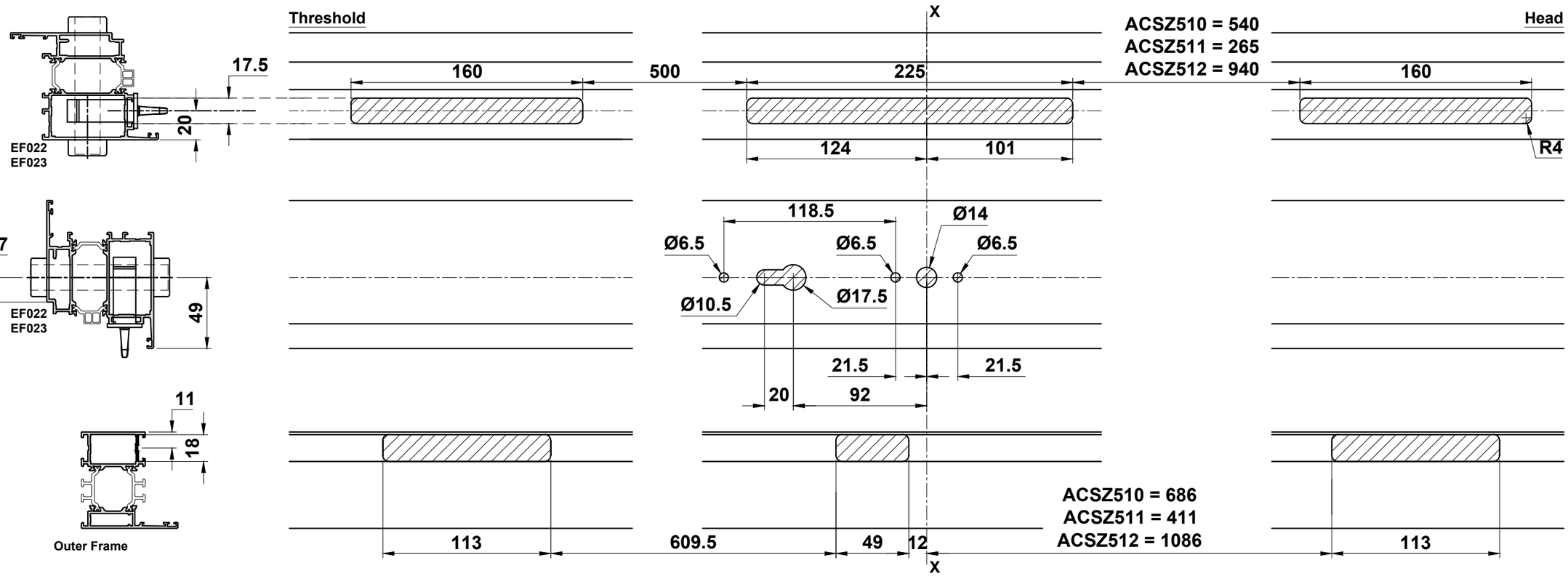

Do Not Scale From This Drawing

Stepped Door - Locking Options

Lock Guide

Sash Height	Locks	Keeps		
		Middle	Top / Bottom	Continuous
2100-2300	ACSZ510	ACSZ650R	ACSZ651	ACSZ680R
1825-2100	ACSZ511			ACSZ681R
2300-2500	ACSZ512			ACSZ682R
1 Point Lock	ACSZ515			

Keep Handing Guide

Viewed Externally

OPEN IN

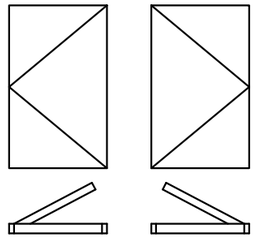

Right Hand Lock Set

Left Hand Lock Set

Outside

OPEN OUT

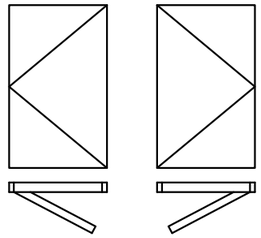

Left Hand Lock Set

Right Hand Lock Set

Outside

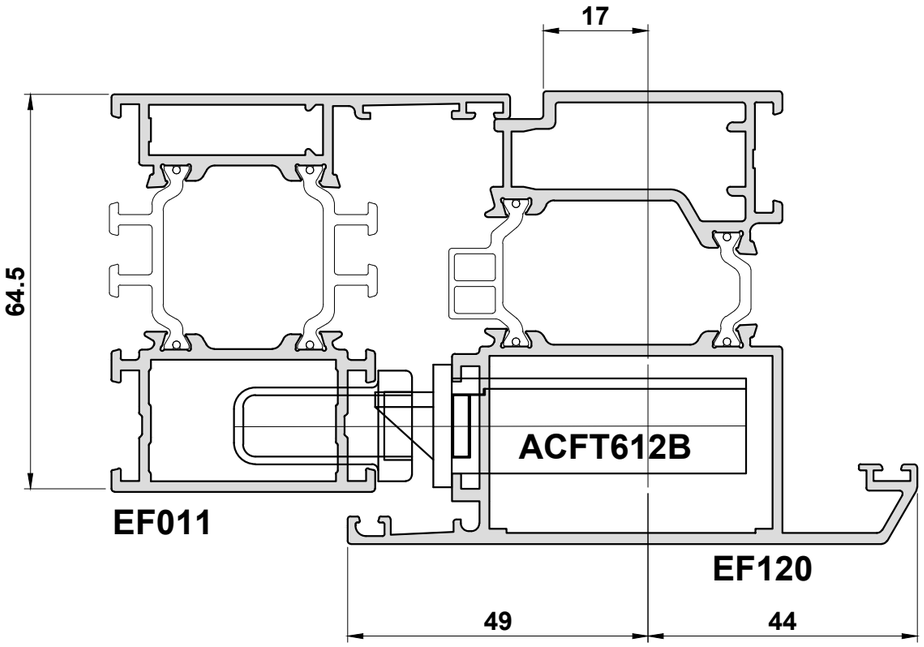

Handle With Large Backplate Guide

Ext. Handle	Int. Handle	Spindle	Cylinder	Screw
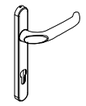	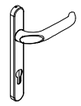	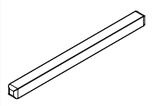	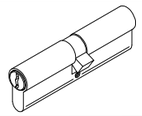	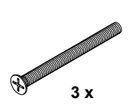 3 x
ACSZ800	ACSZ801	ACMX309 Sq. Spindle 130mm	ACMX0030 Half Cylinder	ACMX861 M5 x 75mm
	ACSZ803			
	ACSZ830 T			
ACSZ802	ACSZ803		ACMX01613 30/55 Cylinder	
	ACSZ830			
ACSZ400 + 2 x ACVS061	ACSZ803	ACMX008 Sq. Spindle 60mm	ACMX01613 30/55 Cylinder	ACVS061 M5 x 40mm
	ACSZ830			

Handle with Small Backplate Guide

Ext. Handle	Ext. Escutcheon	Int. Handle	Int. Escutcheon	Spindle	Cylinder	Screw
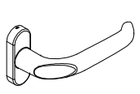	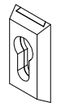	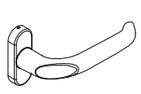	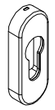	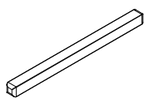	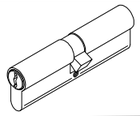	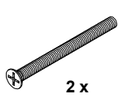 2 x
ACSZ837	ACSZ400	ACSZ836	ACMX208	ACMX309 Sq. Spindle 130mm	ACMX01613	ACMX861 M5 x 75mm
					ACMX0030	
	ACSZ400			ACMX008 Sq. Spindle 60mm	ACMX01613	ACVS061 M5 x 40mm
					ACMX0030	
ACSZ837	ACSZ400	ACSZ827 T		ACMX309 Sq. Spindle 130mm	ACMX01613	ACMX861 M5 x 75mm
					ACMX0030	
	2 X ACVS061		2 X DIN965 M5 X 20			

With Cylinder

Without Cylinder

T Handle With Cylinder

T Handle Without Cylinder

For PAS24 accessory options, please see page E64

Do Not Scale From This Drawing

Stepped Door - Locking Options

Lock Guide

Sash Height	Locks	Keeps		
		Middle	Top / Bottom	Continuous
2100-2300	ACSZ510	ACSZ650R	ACSZ651	ACSZ680R
1825-2100	ACSZ511			ACSZ681R
*2300-2500	ACSZ512			ACSZ682R
1 Point Lock	ACSZ515			

*If using AVCL432 shoot bolts, use ACSZ510 up to 2500mm sash height

Keep Handing Guide

Viewed Externally

OPEN IN

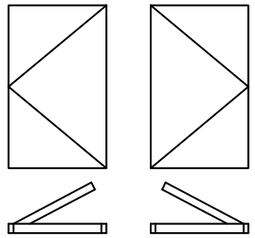

Right Hand Lock Set — Left Hand Lock Set

Outside

OPEN OUT

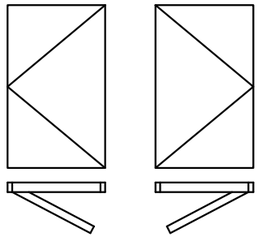

Left Hand Lock Set — Right Hand Lock Set

Outside

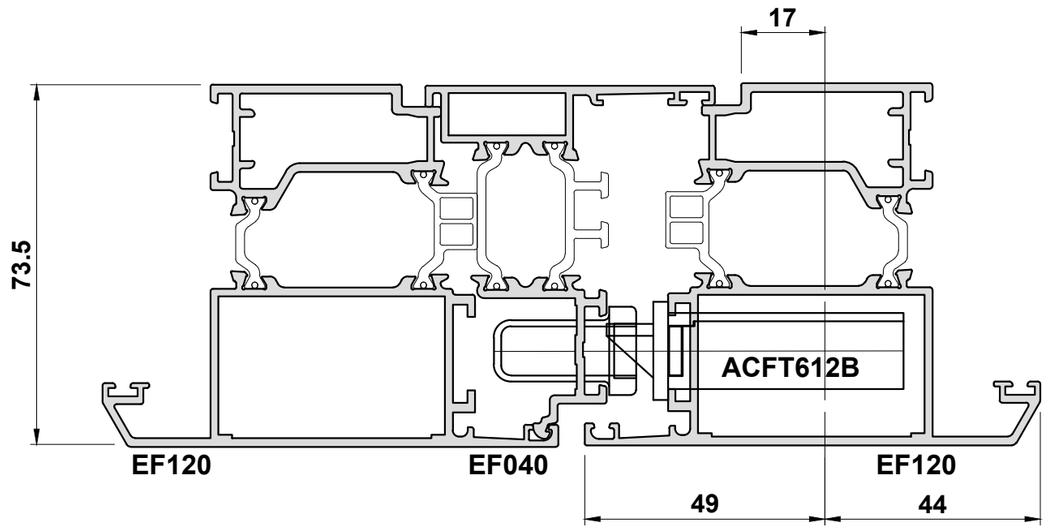

Handle With Large Backplate Guide

Ext. Handle	Int. Handle	Spindle	Cylinder	Screw
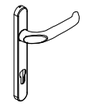		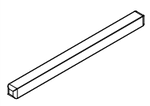	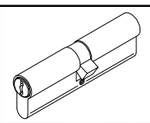	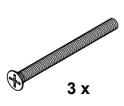 3 x
ACSZ800	ACSZ801 ACSZ803 ACSZ830 T	ACMX309 Sq. Spindle 130mm	ACMX0030 Half Cylinder	ACMX861 M5 x 75mm
ACSZ802	ACSZ803 ACSZ830		ACMX01613 30/55 Cylinder	
ACSZ400 + 2 x ACVS061	ACSZ803 ACSZ830	ACMX008 Sq. Spindle 60mm	ACMX01613 30/55 Cylinder	ACVS061 M5 x 40mm

Handle with Small Backplate Guide

Ext. Handle	Ext. Escutcheon	Int. Handle	Int. Escutcheon	Spindle	Cylinder	Screw
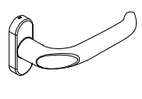	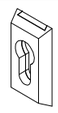	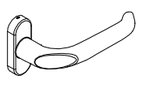	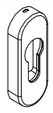	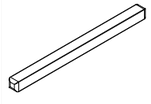	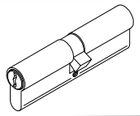	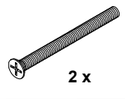 2 x
ACSZ837	ACSZ400	ACSZ836	ACMX208	ACMX309 Sq. Spindle 130mm	ACMX01613 ACMX0030	ACMX861 M5 x 75mm
	ACSZ400			ACMX008 Sq. Spindle 60mm	ACMX01613 ACMX0030	ACVS061 M5 x 40mm
ACSZ837	ACSZ400	ACSZ827 T		ACMX309 Sq. Spindle 130mm	ACMX01613 ACMX0030	ACMX861 M5 x 75mm
	2 X ACVS061		2 X DIN965 M5 X 20			

With Cylinder

Without Cylinder

T Handle With Cylinder

T Handle Without Cylinder

For PAS24 accessory options, please see page E64

Do Not Scale From This Drawing

ACSZ510/511/512 Preparation for EF120

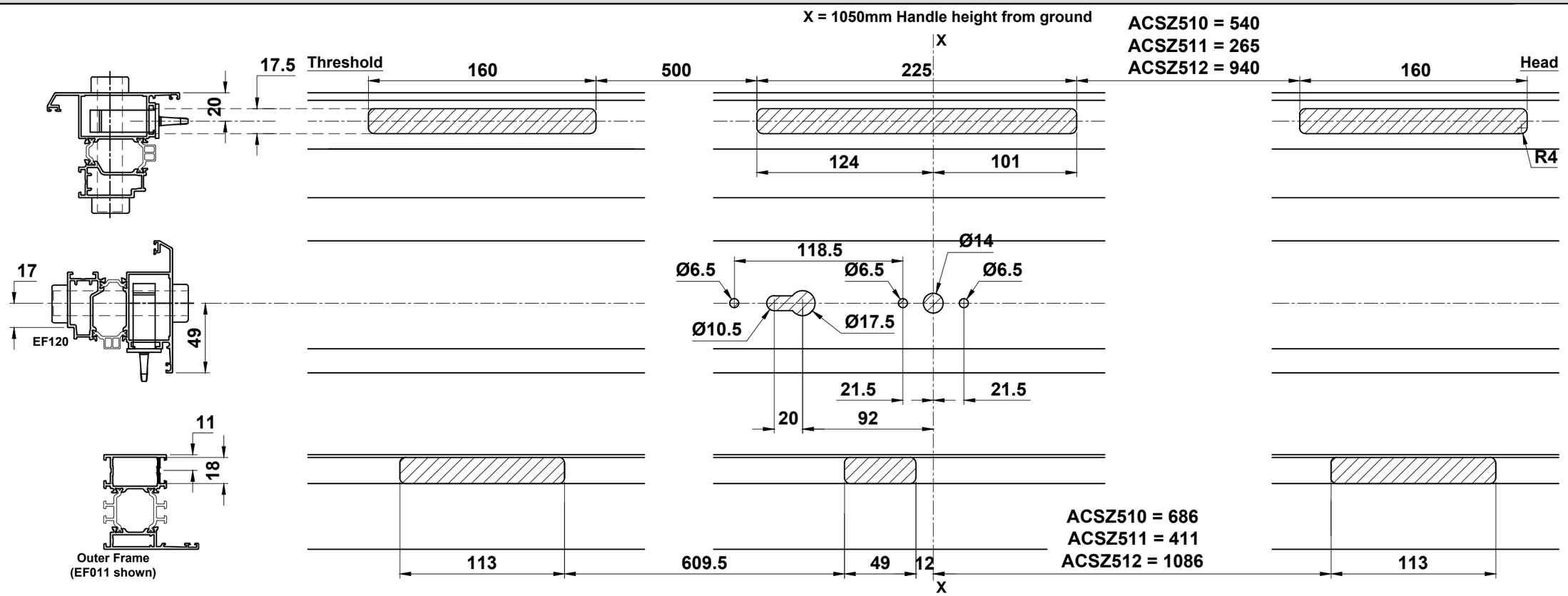

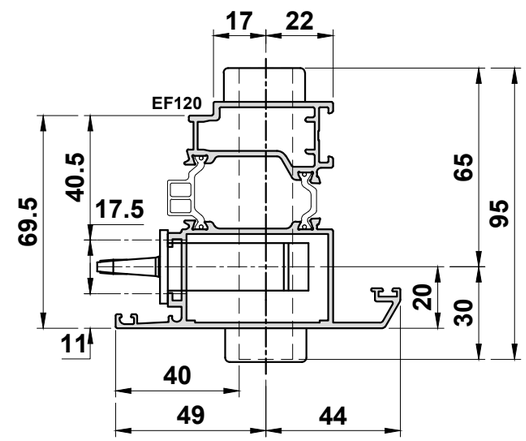

Do Not Scale From This Drawing

EF952 & EF953 Double Door Detail

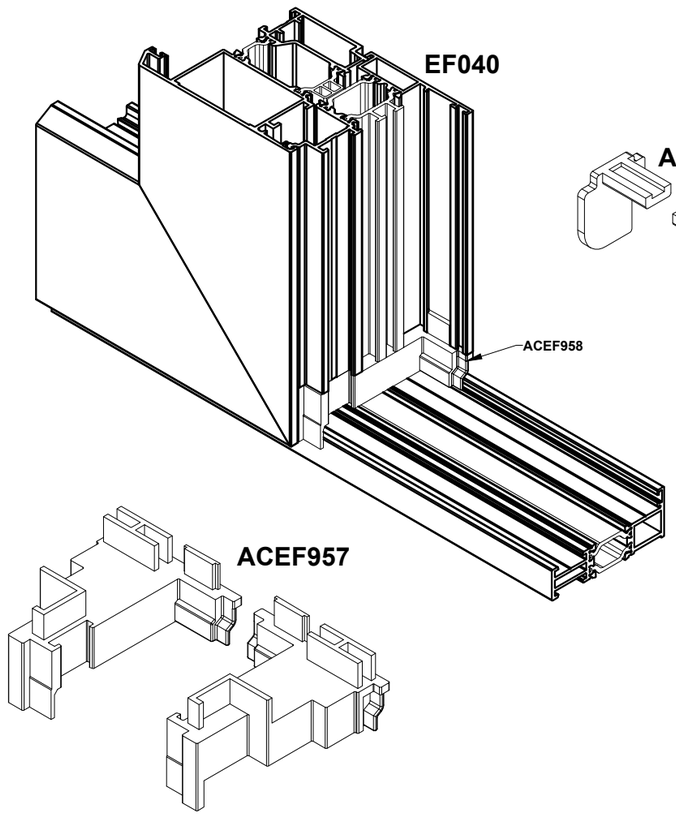

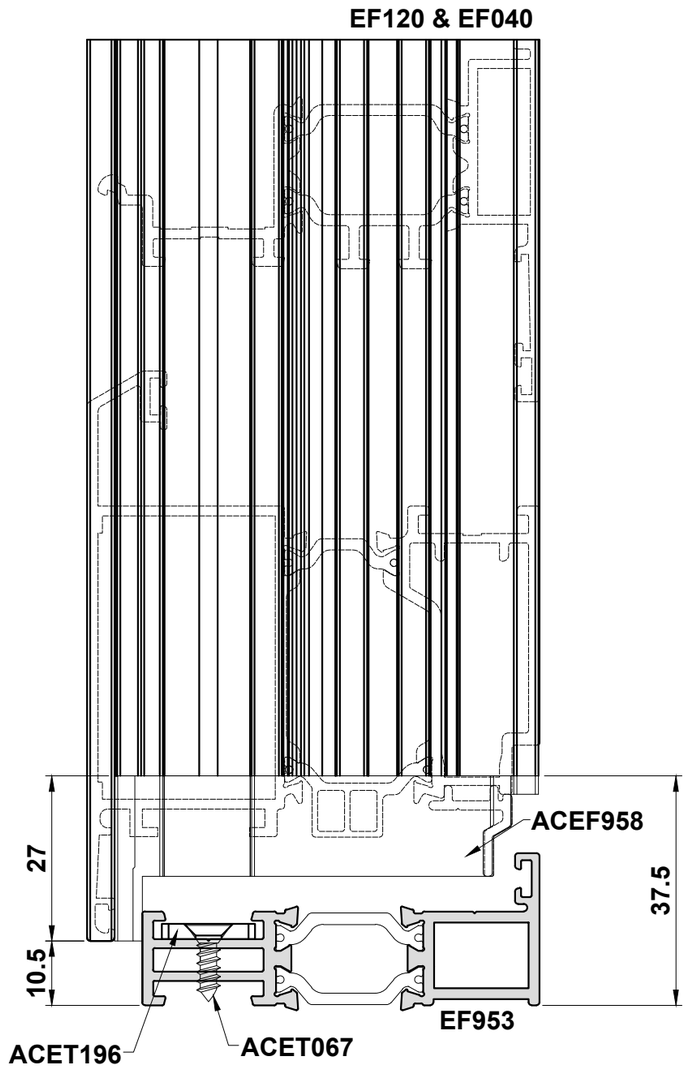

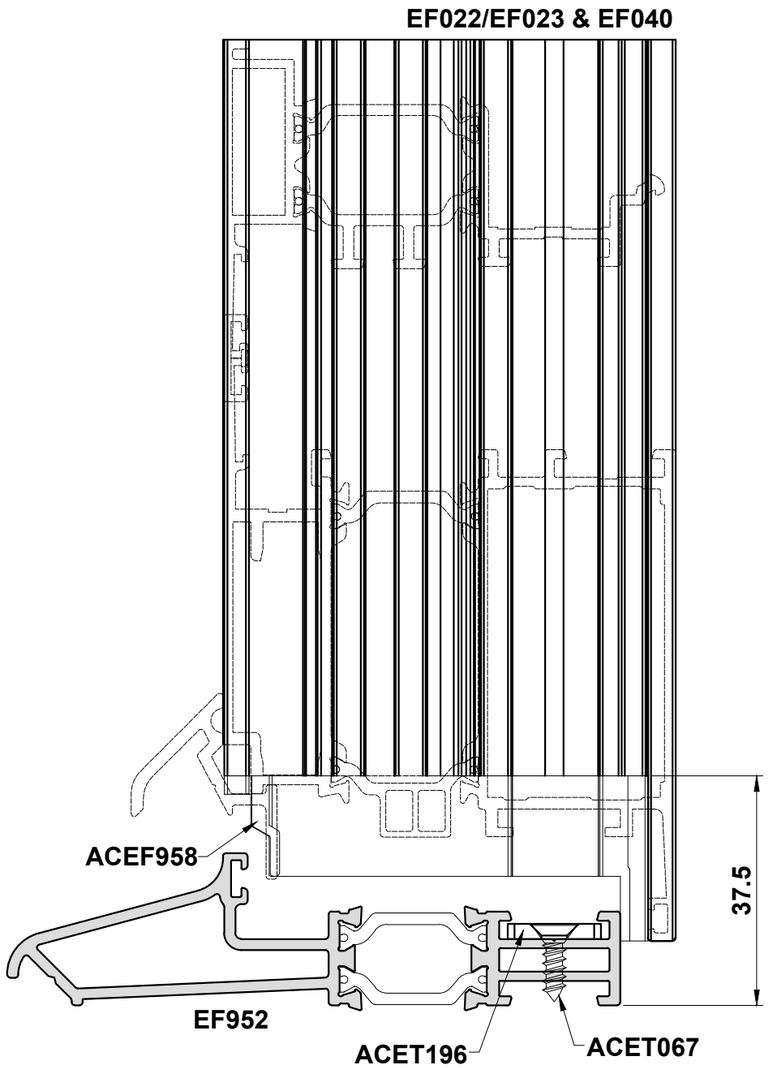

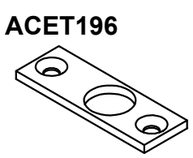

Do Not Scale From This Drawing

ACVL432 Shoot Bolt

Please Note: ACVL432 does not meet the requirements of PAS24. Please use ACGT430 with ACEF961 as detail on page E64.

Note: To avoid collision with shootbolt, use smaller multipoint lock.

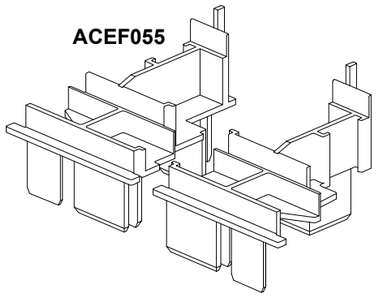

Open Out Double Doors

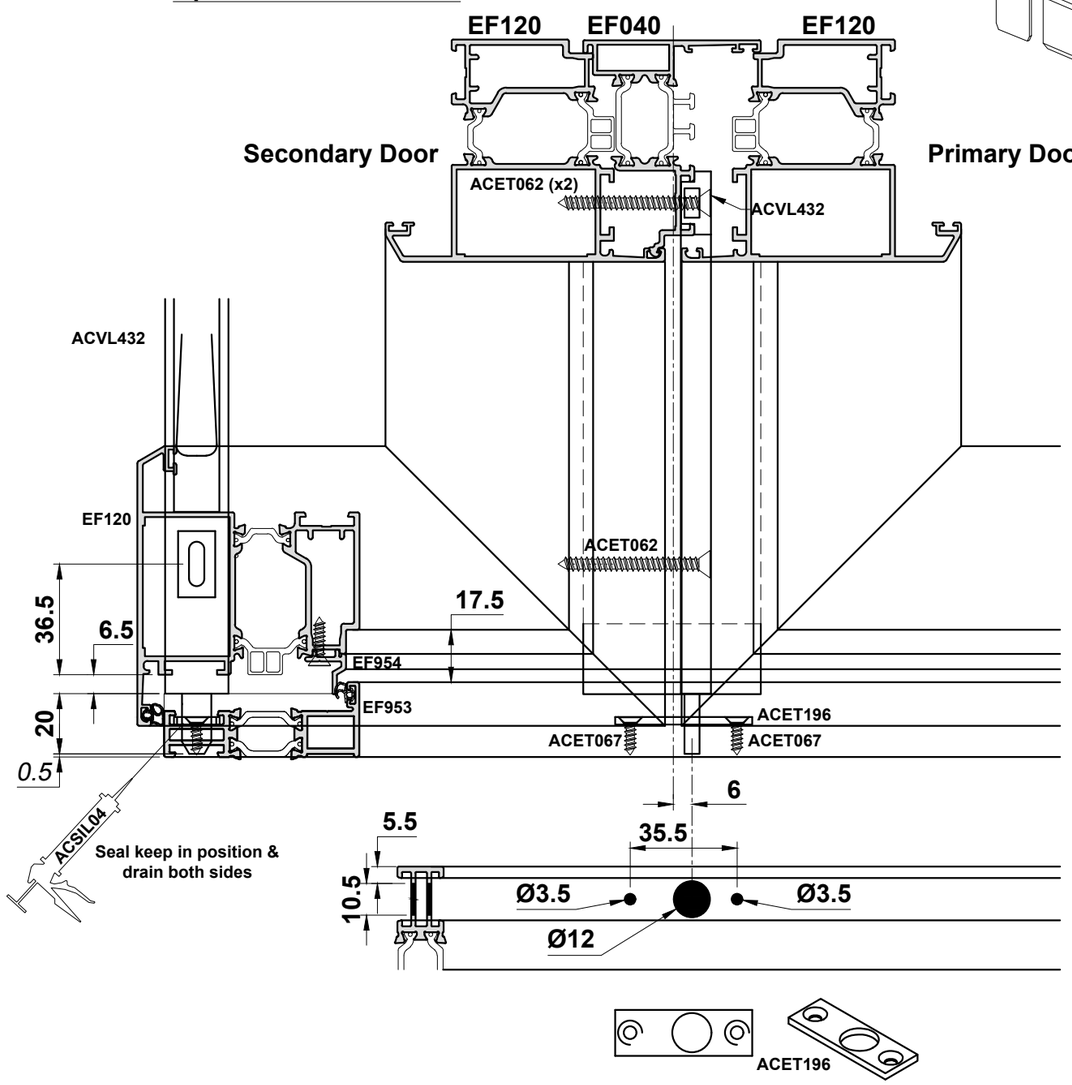

Open In Double Doors

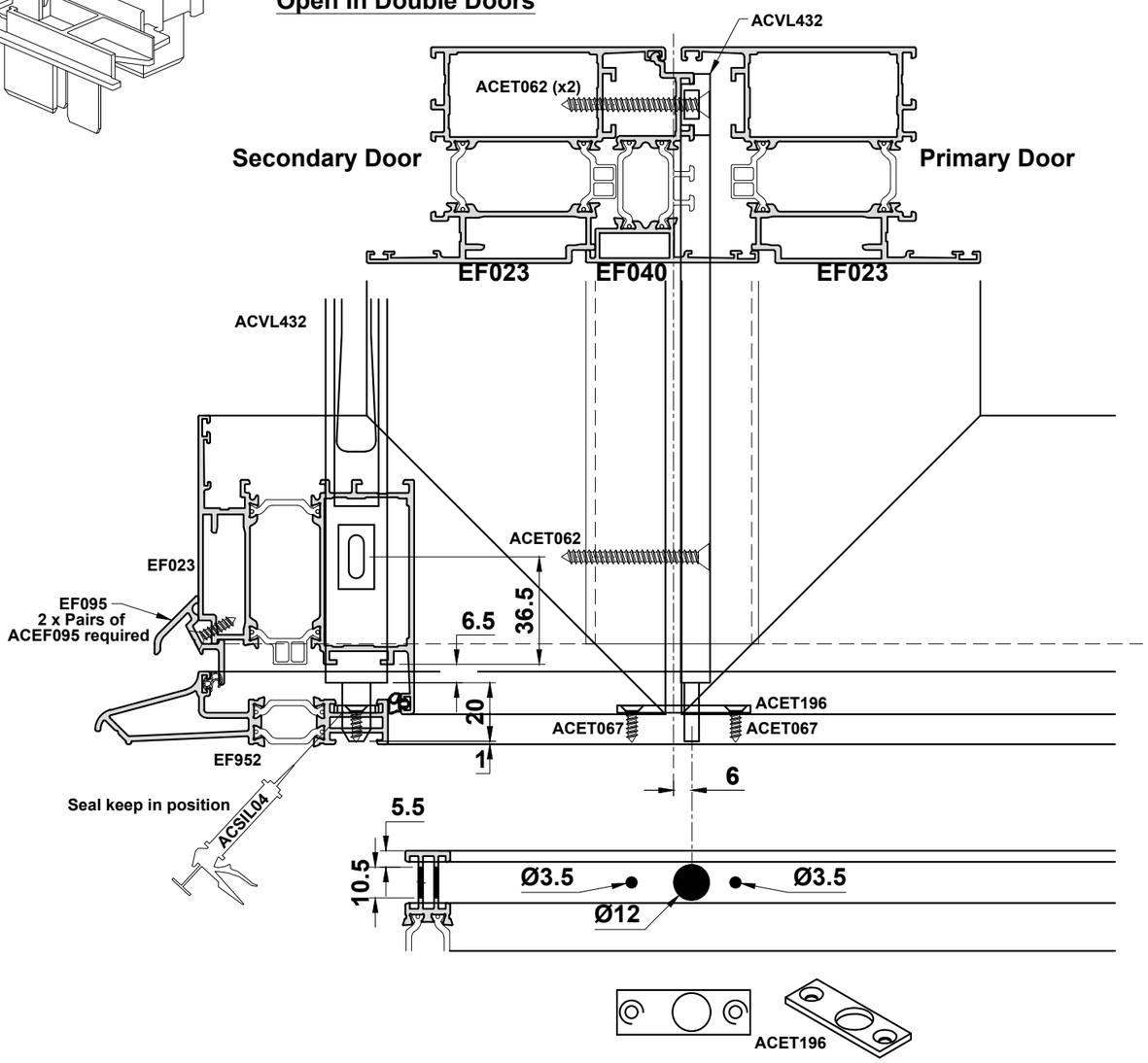

Do Not Scale From This Drawing

ACGT430 Preparation

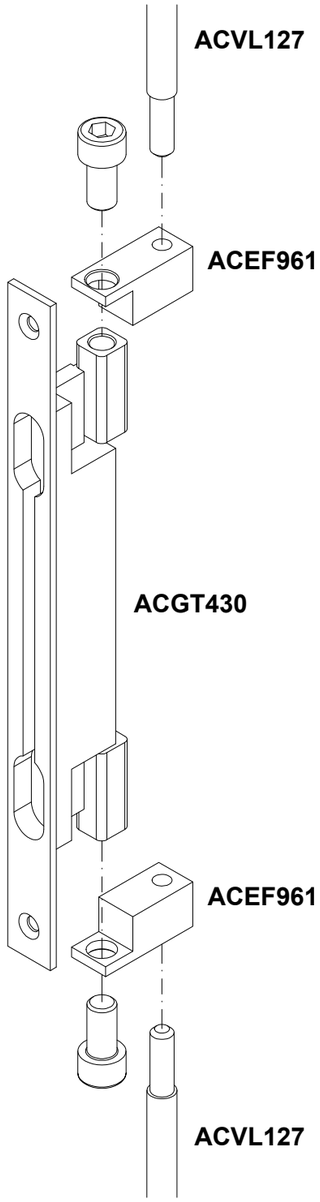

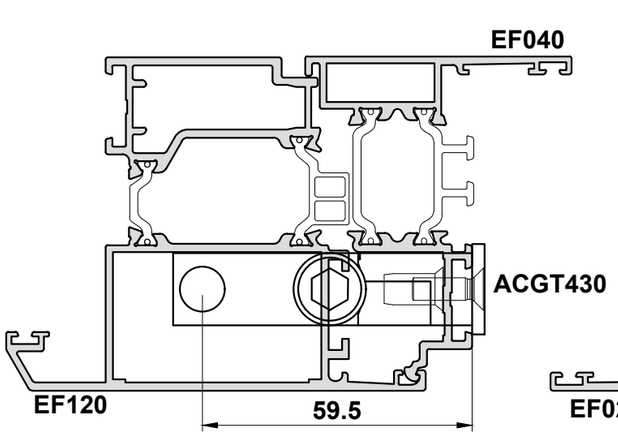

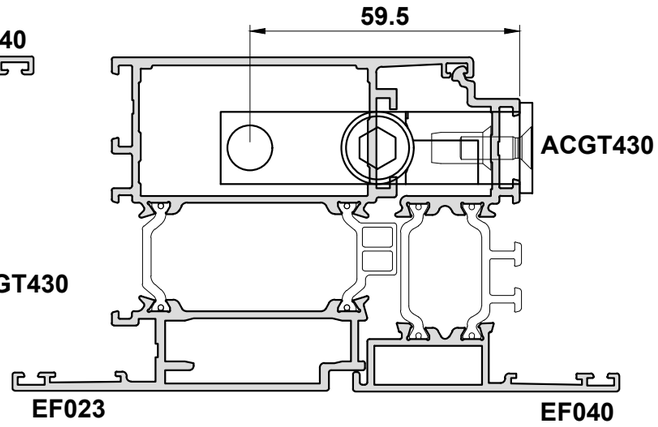

ACVL127 Top Rod

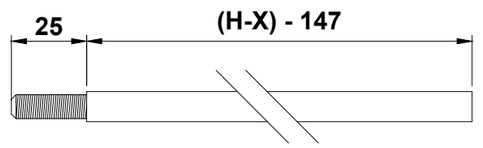

ACVL127 Bottom Rod

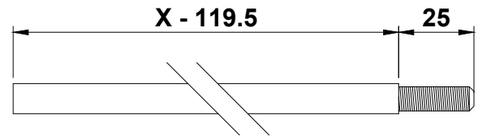

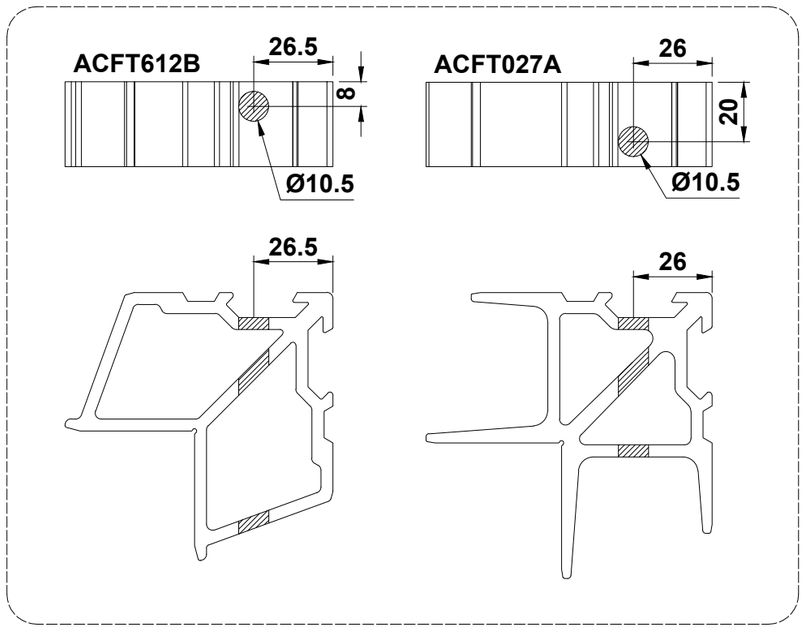

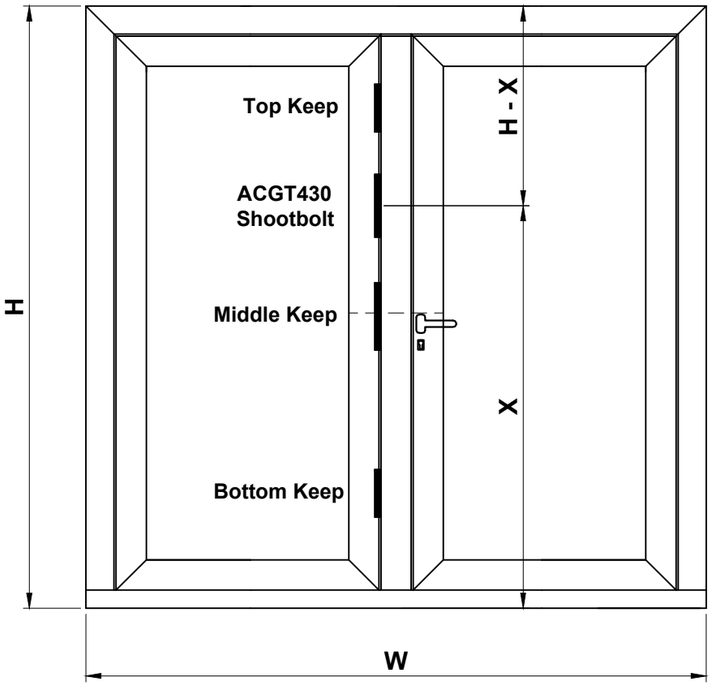

Do Not Scale From This Drawing

ACGT430 Preparation

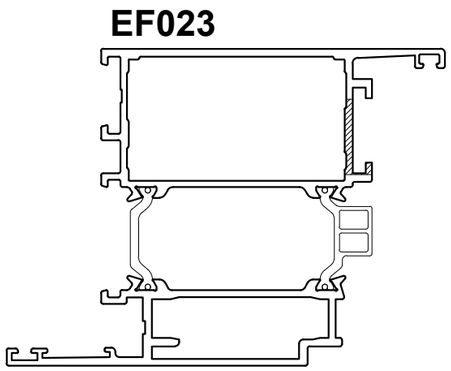

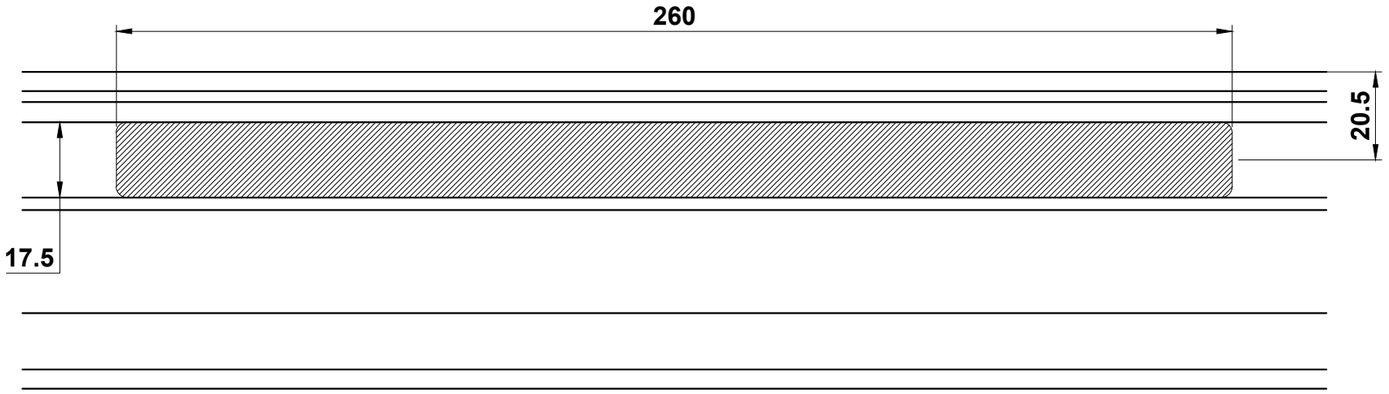

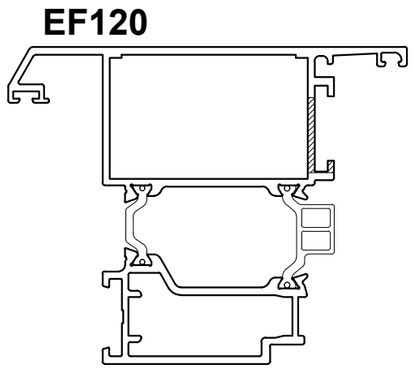

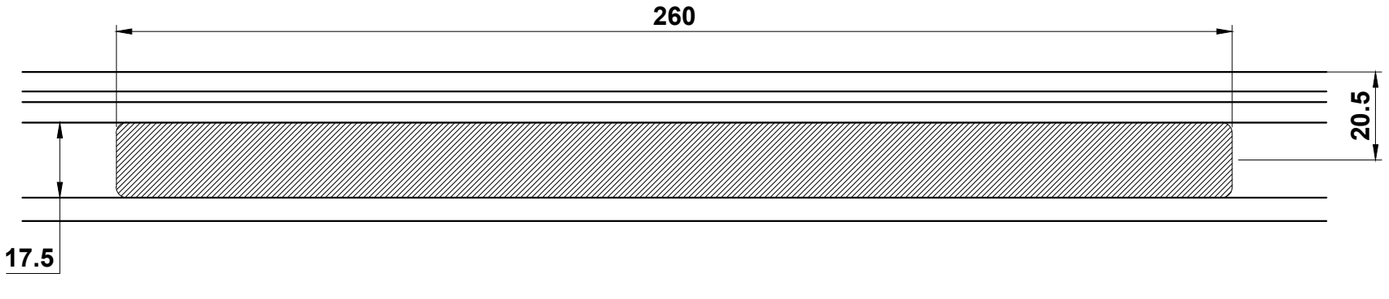

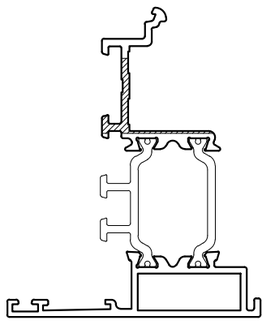

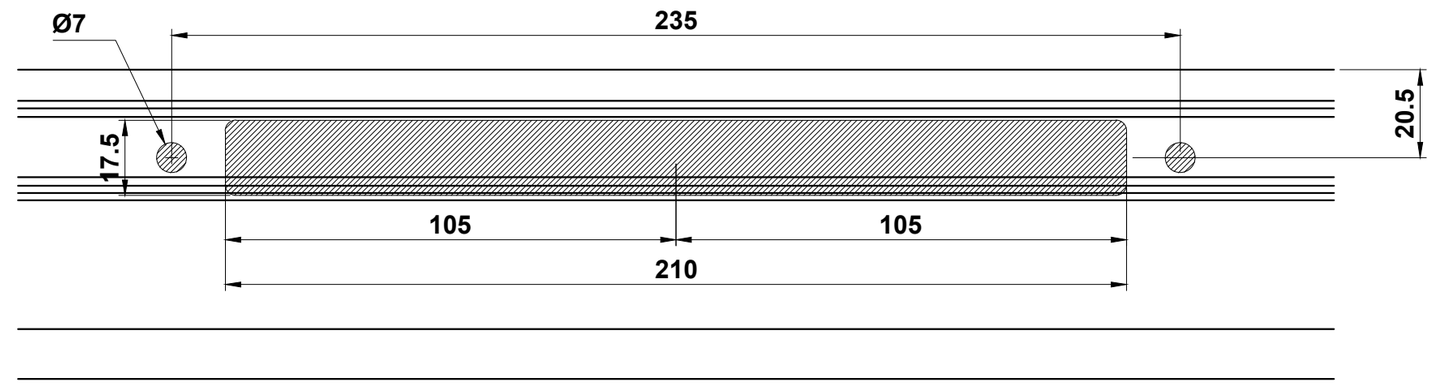

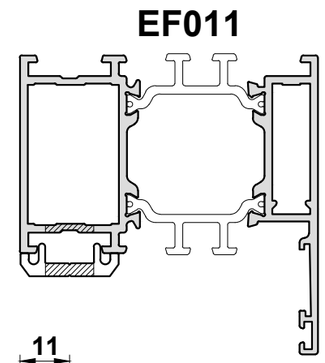

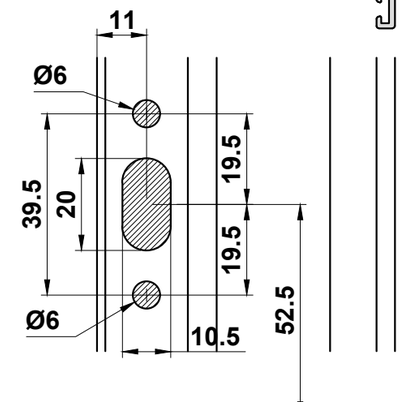

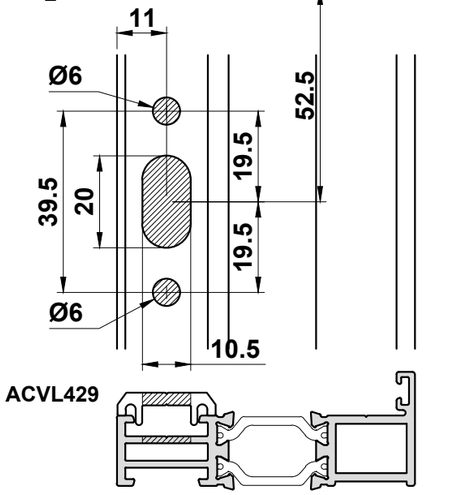

Do Not Scale From This Drawing

PAS24:2012 Overview - Stepped Open In & Open Out Doors

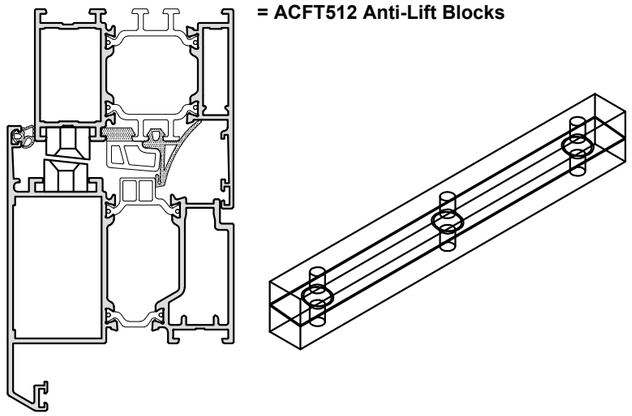

= ACFT512 Anti-Lift Blocks

= ACEF057 Glazing Support

= ACFT512 Anti-Lift Blocks

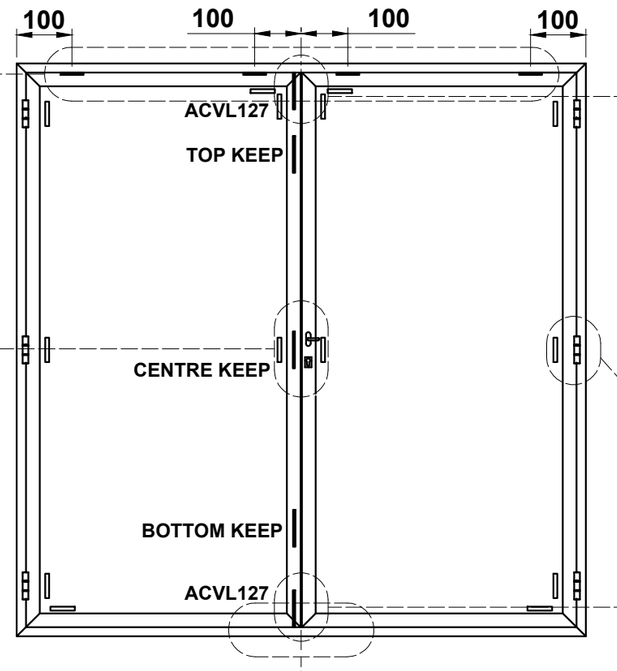

ACGT430 & ACEF961 with ACVL127 Rods

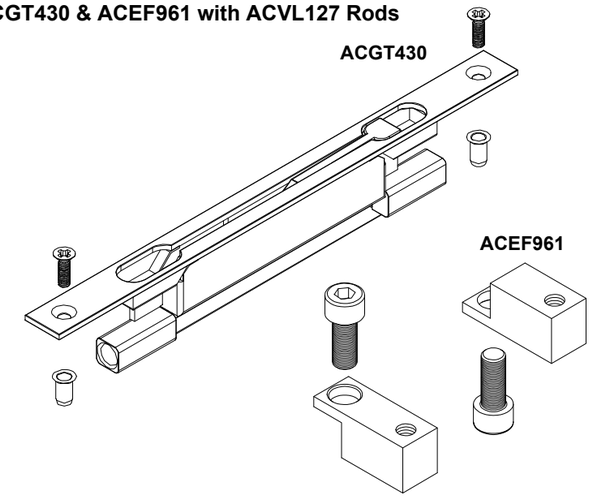

ACMX102 Two Part Hinge with ACMX103 Security Pins
or
ACUN102 Three Part Hinge with ACUN103 Security Pins

Lock Guide

Locks	Keeps	
	Middle	Top / Bottom
ACSZ510	ACSZ650(L/R)	ACSZ651
ACSZ511		
ACSZ512		

Keep Handing Guide

Viewed Externally

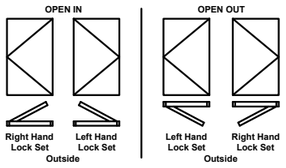

Handle with Small Backplate Guide

Ext. Handle	Ext. Escutcheon	Int. Handle	Int. Escutcheon	Spindle	Cylinder	Screw
						2 x
ACSZ837	ACSZ400	ACSZ836	ACMX208	ACMX309 Sq. Spindle 130mm	ACMX01613 ACMX0030	ACMX861 M5 x 75mm
	ACSZ400			ACMX008 Sq. Spindle 60mm	ACMX01613 ACMX0030	ACVS061 M5 x 40mm
ACSZ837	ACSZ400	ACSZ827		ACMX309 Sq. Spindle 130mm	ACMX01613 ACMX0030	ACMX861 M5 x 75mm
	2 X ACVS061		2 X DIN965 M5 X 20			

Please Note: In addition to normal Toe and Heeling make sure to pack behind the lock and hinges.

The details on this page show the specific hardware required to achieve PAS24:2012. Hardware not shown is standard.

See page E67 for Glazing Bead selection.

ACVL429

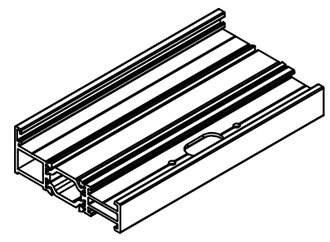

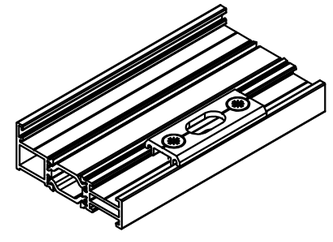

Do Not Scale From This Drawing

Standard Glazing Chart

Outer Frame:	Sash:	Transom/ Mullion:	Reverse Adaptor:
EF010	EF120	EF030	EF044
EF011	EF424	EF031	EF946
EF019	EF425	EF032	
EF110	EF926	EF033	
		EF034	
		EF035	
		EF036	

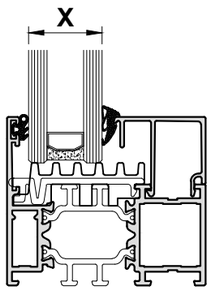

Glass Thickness	External Gasket	Internal Gasket	Glazing Bead
4	ACVG31N	ACVG340N	GL048
5	ACVG31N	ACVG34N	GL048
6	ACVG31N	ACVG33N	GL048
7	ACVG31N	ACVG32N	GL048
8	ACVG31N	ACVG340N	GL045
9	ACVG31N	ACVG34N	GL045
10	ACVG31N	ACVG33N	GL045
11	ACVG31N	ACVG340N	GL041
12	ACVG31N	ACVG34N	GL041
13	ACVG31N	ACVG33N	GL041
14	ACVG31N	ACVG32N	GL041
15	ACVG31N	ACVG33N	GL039
16	ACVG31N	ACVG32N	GL039
17	ACVG31N	ACVG33N	GL037
18	ACVG31N	ACVG32N	GL037
19	ACVG31N	ACVG34N	GL034
20	ACVG31N	ACVG33N	GL034
21	ACVG31N	ACVG32N	GL034
22	ACVG31N	ACVG340N	GL030
23	ACVG31N	ACVG34N	GL030
24	ACVG31N	ACVG33N	GL030
25	ACVG31N	ACVG32N	GL030
26	ACVG31N	ACVG33N	GL028
27	ACVG31N	ACVG32N	GL028

Glass Thickness	External Gasket	Internal Gasket	Glazing Bead
28	ACVG31N	ACVG33N	GL026
29	ACVG31N	ACVG32N	GL026
30	ACVG31N	ACVG34N	GL023
31	ACVG31N	ACVG33N	GL023
32	ACVG31N	ACVG32N	GL023
33	ACVG31N	ACVG34N	GL020
34	ACVG31N	ACVG33N	GL020
35	ACVG31N	ACVG32N	GL020
36	ACVG31N	ACVG340N	GL016
37	ACVG31N	ACVG34N	GL016
38	ACVG31N	ACVG33N	GL016
39	ACVG31N	ACVG32N	GL016
40	ACVG31N	ACVG33N	GL014
41	ACVG31N	ACVG32N	GL014
42	ACVG31N	ACVG33N	GL012
43	ACVG31N	ACVG32N	GL012
44	ACVG31N	ACVG340N	GL008
45	ACVG31N	ACVG34N	GL008
46	ACVG31N	ACVG33N	GL008
47	ACVG31N	ACVG32N	GL008
48	ACVG31N	ACVG340N	GL004
49	ACVG31N	ACVG34N	GL004
50	ACVG31N	ACVG33N	GL004
51	ACVG31N	ACVG32N	GL004

Sash:	Transom/ Mullion:
EF020	EF130
EF021	EF131
EF022	
EF023	

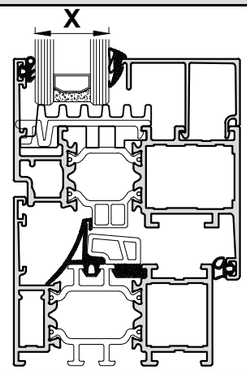

Important Note

For PAS24:2012 security beads must be used. Please see page E67 - E68 for available beads.

Glass Thickness	External Gasket	Internal Gasket	Glazing Bead
13	ACVG31N	ACVG340N	GL048
14	ACVG31N	ACVG34N	GL048
15	ACVG31N	ACVG33N	GL048
16	ACVG31N	ACVG32N	GL048
17	ACVG31N	ACVG34N	GL045
18	ACVG31N	ACVG33N	GL045
19	ACVG31N	ACVG32N	GL045
20	ACVG31N	ACVG340N	GL041
21	ACVG31N	ACVG34N	GL041
22	ACVG31N	ACVG33N	GL041
23	ACVG31N	ACVG32N	GL041
24	ACVG31N	ACVG33N	GL039
25	ACVG31N	ACVG32N	GL039
26	ACVG31N	ACVG33N	GL037
27	ACVG31N	ACVG32N	GL037
28	ACVG31N	ACVG34N	GL034
29	ACVG31N	ACVG33N	GL034
30	ACVG31N	ACVG32N	GL034
31	ACVG31N	ACVG340N	GL030
32	ACVG31N	ACVG34N	GL030
33	ACVG31N	ACVG33N	GL030
34	ACVG31N	ACVG32N	GL030
35	ACVG31N	ACVG33N	GL028
36	ACVG31N	ACVG32N	GL028

Glass Thickness	External Gasket	Internal Gasket	Glazing Bead
37	ACVG31N	ACVG33N	GL026
38	ACVG31N	ACVG32N	GL026
39	ACVG31N	ACVG34N	GL023
40	ACVG31N	ACVG33N	GL023
41	ACVG31N	ACVG32N	GL023
42	ACVG31N	ACVG34N	GL020
43	ACVG31N	ACVG33N	GL020
44	ACVG31N	ACVG32N	GL020
45	ACVG31N	ACVG340N	GL016
46	ACVG31N	ACVG34N	GL016
47	ACVG31N	ACVG33N	GL016
48	ACVG31N	ACFT32N	GL016
49	ACVG31N	ACVG33N	GL014
50	ACVG31N	ACVG32N	GL014
51	ACVG31N	ACVG33N	GL012
52	ACVG31N	ACVG32N	GL012
53	ACVG31N	ACVG340N	GL008
54	ACVG31N	ACVG34N	GL008
55	ACVG31N	ACVG33N	GL008
56	ACVG31N	ACVG32N	GL008
57	ACVG31N	ACVG340N	GL004
58	ACVG31N	ACVG34N	GL004
59	ACVG31N	ACVG33N	GL004
60	ACVG31N	ACVG32N	GL004

Do Not Scale From This Drawing

Standard Glazing Chart

Outer Frame:
EF010
EF011
EF019
EF110

Sash:
EF120
EF424
EF425
EF926

Transom/ Mullion:
EF030
EF031
EF032
EF033
EF034
EF035
EF036

Reverse Adaptor:
EF044
EF946

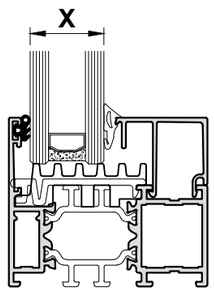

ACUN033 ACUN036



Glass Thickness	External Gasket	Internal Gasket	Glazing Bead
4	ACVG31N	ACUN036	GL048
5	ACVG31N	ACUN033	GL048
6	ACVG31N	ACUN033	GL048
7	ACVG31N	ACUN033	GL048
8	ACVG31N	ACUN033	GL045
9	ACVG31N	ACUN033	GL045
10	ACVG31N	ACUN033	GL045
11	ACVG31N	ACUN036	GL041
12	ACVG31N	ACUN033	GL041
13	ACVG31N	ACUN033	GL041
14	ACVG31N	ACUN033	GL041
15	ACVG31N	ACUN033	GL039
16	ACVG31N	ACUN033	GL039
17	ACVG31N	ACUN033	GL037
18	ACVG31N	ACUN033	GL037
19	ACVG31N	ACUN033	GL034
20	ACVG31N	ACUN033	GL034
21	ACVG31N	ACUN033	GL034
22	ACVG31N	ACUN036	GL030
23	ACVG31N	ACUN033	GL030
24	ACVG31N	ACUN033	GL030
25	ACVG31N	ACUN033	GL030
26	ACVG31N	ACUN033	GL028
27	ACVG31N	ACUN033	GL028

Glass Thickness	External Gasket	Internal Gasket	Glazing Bead
28	ACVG31N	ACUN033	GL026
29	ACVG31N	ACUN033	GL026
30	ACVG31N	ACUN033	GL023
31	ACVG31N	ACUN033	GL023
32	ACVG31N	ACUN033	GL023
33	ACVG31N	ACUN033	GL020
34	ACVG31N	ACUN033	GL020
35	ACVG31N	ACUN033	GL020
36	ACVG31N	ACUN036	GL016
37	ACVG31N	ACUN033	GL016
38	ACVG31N	ACUN033	GL016
39	ACVG31N	ACUN033	GL016
40	ACVG31N	ACUN033	GL014
41	ACVG31N	ACUN033	GL014
42	ACVG31N	ACUN033	GL012
43	ACVG31N	ACUN033	GL012
44	ACVG31N	ACUN036	GL008
45	ACVG31N	ACUN033	GL008
46	ACVG31N	ACUN033	GL008
47	ACVG31N	ACUN033	GL008
48	ACVG31N	ACUN036	GL004
49	ACVG31N	ACUN033	GL004
50	ACVG31N	ACUN033	GL004
51	ACVG31N	ACUN033	GL004

Sash:
EF020
EF021
EF022
EF023

Transom/ Mullion:
EF130
EF131

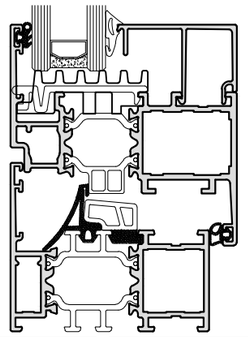

ACUN033 ACUN036

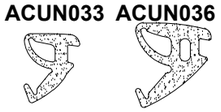

Important Note

For PAS24:2012 security beads must be used. Please see page E67 - E68 for available beads.

Glass Thickness	External Gasket	Internal Gasket	Glazing Bead
13	ACVG31N	ACUN036	GL048
14	ACVG31N	ACUN033	GL048
15	ACVG31N	ACUN033	GL048
16	ACVG31N	ACUN036	GL045
17	ACVG31N	ACUN033	GL045
18	ACVG31N	ACUN033	GL045
19	ACVG31N	ACUN036	GL041
20	ACVG31N	ACUN036	GL041
21	ACVG31N	ACUN033	GL041
22	ACVG31N	ACUN033	GL041
23	ACVG31N	ACUN033	GL039
24	ACVG31N	ACUN033	GL039
25	ACVG31N	ACUN033	GL037
26	ACVG31N	ACUN033	GL037
27	ACVG31N	ACUN036	GL034
28	ACVG31N	ACUN033	GL034
29	ACVG31N	ACUN033	GL034
30	ACVG31N	ACUN036	GL030
31	ACVG31N	ACUN036	GL030
32	ACVG31N	ACUN033	GL030
33	ACVG31N	ACUN033	GL030
34	ACVG31N	ACUN033	GL028
35	ACVG31N	ACUN033	GL028
36	ACVG31N	ACUN033	GL026

Glass Thickness	External Gasket	Internal Gasket	Glazing Bead
37	ACVG31N	ACUN033	GL026
38	ACVG31N	ACUN036	GL023
39	ACVG31N	ACUN033	GL023
40	ACVG31N	ACUN033	GL023
41	ACVG31N	ACUN036	GL020
42	ACVG31N	ACUN033	GL020
43	ACVG31N	ACUN033	GL020
44	ACVG31N	ACUN036	GL016
45	ACVG31N	ACUN036	GL016
46	ACVG31N	ACUN033	GL016
47	ACVG31N	ACUN033	GL016
48	ACVG31N	ACUN033	GL014
49	ACVG31N	ACUN033	GL014
50	ACVG31N	ACUN033	GL012
51	ACVG31N	ACUN033	GL012

Do Not Scale From This Drawing

High Security Glazing Chart

Outer Frame:	Sash:	Transom/ Mullion:	Reverse Adaptor:
EF010	EF120	EF030	EF044
EF011	EF424	EF031	EF946
EF019	EF425	EF032	
EF110	EF926	EF033	
		EF034	
		EF035	
		EF036	

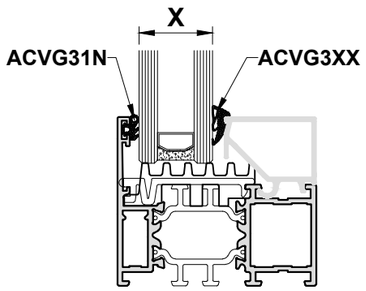

Glass Thickness	External Gasket	Internal Gasket	Glazing Bead
18	ACVG31N	ACVG340N	GL534
19	ACVG31N	ACVG34N	GL534
20	ACVG31N	ACVG33N	GL534
21	ACVG31N	ACVG32N	GL534
22	ACVG31N	ACVG340N	GL530
23	ACVG31N	ACVG34N	GL530
24	ACVG31N	ACVG33N	GL530
25	ACVG31N	ACVG32N	GL530
26	ACVG31N	ACVG340N	GL526
27	ACVG31N	ACVG34N	GL526
28	ACVG31N	ACVG33N	GL526
29	ACVG31N	ACVG32N	GL526
36	ACVG31N	ACVG340N	GL516
37	ACVG31N	ACVG34N	GL516
38	ACVG31N	ACVG33N	GL516
39	ACVG31N	ACVG32N	GL516
40	ACVG31N	ACVG340N	GL512
41	ACVG31N	ACVG34N	GL512
42	ACVG31N	ACVG33N	GL512
43	ACVG31N	ACVG32N	GL512
48	ACVG31N	ACVG340N	GL504
49	ACVG31N	ACVG34N	GL504
50	ACVG31N	ACVG33N	GL504
51	ACVG31N	ACVG32N	GL504

Sash:	Transom/ Mullion:
EF020	EF130
EF021	EF131
EF022	
EF023	

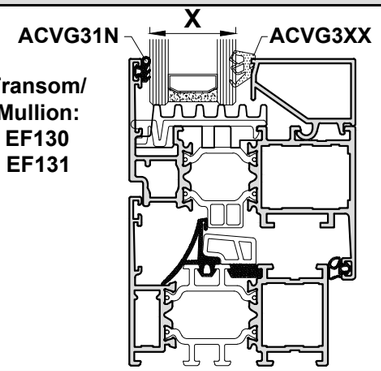

Glass Thickness	External Gasket	Internal Gasket	Glazing Bead
27	ACVG31N	ACVG340N	GL534
28	ACVG31N	ACVG34N	GL534
29	ACVG31N	ACVG33N	GL534
30	ACVG31N	ACVG32N	GL534
31	ACVG31N	ACVG340N	GL530
32	ACVG31N	ACVG34N	GL530
33	ACVG31N	ACVG33N	GL530
34	ACVG31N	ACVG32N	GL530
35	ACVG31N	ACVG340N	GL526
36	ACVG31N	ACVG34N	GL526
37	ACVG31N	ACVG33N	GL526
38	ACVG31N	ACVG32N	GL526
45	ACVG31N	ACVG340N	GL516
46	ACVG31N	ACVG34N	GL516
47	ACVG31N	ACVG33N	GL516
48	ACVG31N	ACFT32N	GL516
49	ACVG31N	ACVG340N	GL512
50	ACVG31N	ACVG34N	GL512
51	ACVG31N	ACVG33N	GL512
52	ACVG31N	ACVG32N	GL512
57	ACVG31N	ACVG340N	GL504
58	ACVG31N	ACVG34N	GL504
59	ACVG31N	ACVG33N	GL504
60	ACVG31N	ACVG32N	GL504

Do Not Scale From This Drawing

High Security Glazing Chart

Outer Frame:
EF010
EF011
EF019
EF110

Sash:
EF120
EF424
EF425
EF926

Transom/ Mullion:
EF030
EF031
EF032
EF033
EF034
EF035
EF036

Reverse Adaptor:
EF044
EF946

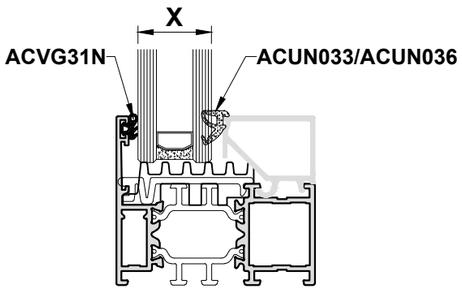

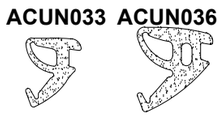

Glass Thickness	External Gasket	Internal Gasket	Glazing Bead
16	ACVG31N	ACUN033	GL534
17	ACVG31N	ACUN033	GL534
18	ACVG31N	ACUN033	GL534
19	ACVG31N	ACUN033	GL534
20	ACVG31N	ACUN033	GL534
21	ACVG31N	ACUN033	GL534
22	ACVG31N	ACUN036	GL530
23	ACVG31N	ACUN033	GL530
24	ACVG31N	ACUN033	GL530
25	ACVG31N	ACUN033	GL530
26	ACVG31N	ACUN036	GL526
27	ACVG31N	ACUN033	GL526
28	ACVG31N	ACUN033	GL526
29	ACVG31N	ACUN033	GL526
32	ACVG31N	ACUN033	GL521
33	ACVG31N	ACUN033	GL521
34	ACVG31N	ACUN036	GL516
35	ACVG31N	ACUN036	GL516
36	ACVG31N	ACUN036	GL516
37	ACVG31N	ACUN033	GL516
38	ACVG31N	ACUN033	GL516
39	ACVG31N	ACUN033	GL516
40	ACVG31N	ACUN036	GL512
41	ACVG31N	ACUN033	GL512

Glass Thickness	External Gasket	Internal Gasket	Glazing Bead
42	ACVG31N	ACUN033	GL512
43	ACVG31N	ACUN033	GL512
46	ACVG31N	ACUN036	GL504
47	ACVG31N	ACUN036	GL504
48	ACVG31N	ACUN036	GL504
49	ACVG31N	ACUN033	GL504
50	ACVG31N	ACUN033	GL504
51	ACVG31N	ACUN033	GL504

Sash:
EF020
EF021
EF022
EF023

Transom/ Mullion:
EF130
EF131

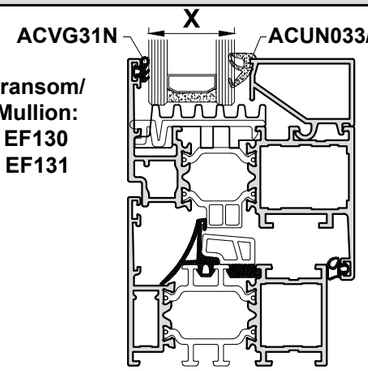

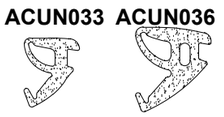

Glass Thickness	External Gasket	Internal Gasket	Glazing Bead
25	ACVG31N	ACUN036	GL534
26	ACVG31N	ACUN036	GL534
27	ACVG31N	ACUN036	GL534
28	ACVG31N	ACUN033	GL534
29	ACVG31N	ACUN033	GL534
30	ACVG31N	ACUN033	GL534
31	ACVG31N	ACUN036	GL530
32	ACVG31N	ACUN033	GL530
33	ACVG31N	ACUN033	GL530
34	ACVG31N	ACUN033	GL530
35	ACVG31N	ACUN036	GL526
36	ACVG31N	ACUN033	GL526
37	ACVG31N	ACUN033	GL526
38	ACVG31N	ACUN033	GL526
41	ACVG31N	ACUN033	GL521
42	ACVG31N	ACUN033	GL521
43	ACVG31N	ACUN036	GL516
44	ACVG31N	ACUN036	GL516
45	ACVG31N	ACUN036	GL516
46	ACVG31N	ACUN033	GL516
47	ACVG31N	ACUN033	GL516
48	ACVG31N	ACUN033	GL516
49	ACVG31N	ACUN036	GL512
50	ACVG31N	ACUN033	GL512

Glass Thickness	External Gasket	Internal Gasket	Glazing Bead
51	ACVG31N	ACUN033	GL512
52	ACVG31N	ACUN033	GL512
55	ACVG31N	ACUN036	GL504
56	ACVG31N	ACUN036	GL504
57	ACVG31N	ACUN036	GL504
58	ACVG31N	ACUN033	GL504
59	ACVG31N	ACUN033	GL504
60	ACVG31N	ACUN033	GL504

Do Not Scale From This Drawing

EF910 & EF930 Glazing Chart

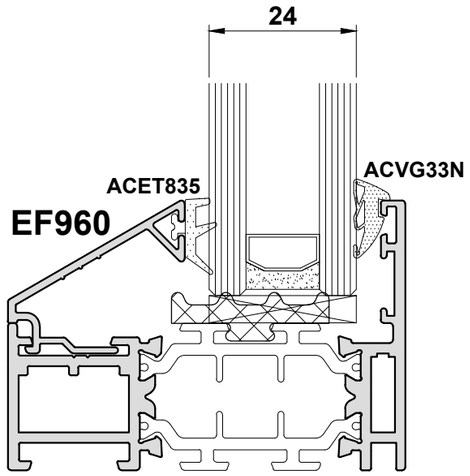

Outer Frame: EF910
Mullion: EF930

Glass Thickness	External Gasket	Internal Gasket	Glazing Bead
24	ACET835	ACVG33N	EF960
25 (24.8)	ACET835	ACVG32N	EF960

Glass Thickness	External Gasket	Internal Gasket	Glazing Bead
24	ACET835	ACUN033	EF960
25 (24.8)	ACET835	ACUN033	EF960

EF966

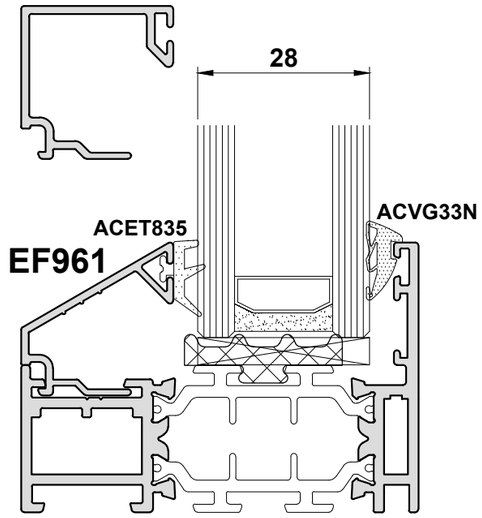

Outer Frame: EF910
Mullion: EF930

Glass Thickness	External Gasket	Internal Gasket	Glazing Bead
28	ACET835	ACVG33N	EF961/EF966
29 (28.8)	ACET835	ACVG32N	EF961/EF966

Glass Thickness	External Gasket	Internal Gasket	Glazing Bead
28	ACET835	ACUN033	EF961/EF966
29 (28.8)	ACET835	ACUN033	EF961/EF966

EF967

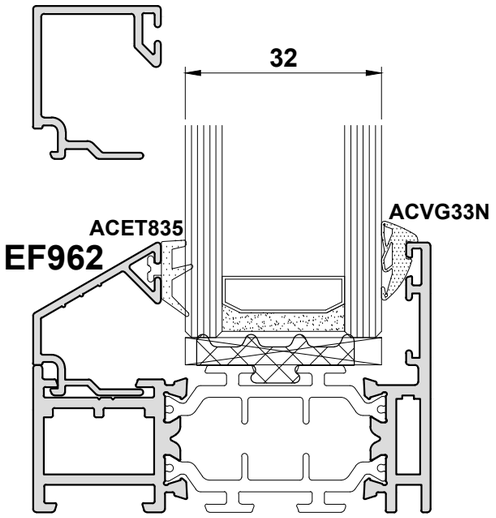

Outer Frame: EF910
Mullion: EF930

Glass Thickness	External Gasket	Internal Gasket	Glazing Bead
32	ACET835	ACVG33N	EF962/EF967
33 (32.8)	ACET835	ACVG32N	EF962/EF967

Glass Thickness	External Gasket	Internal Gasket	Glazing Bead
32	ACET835	ACUN033	EF962/EF967
33 (32.8)	ACET835	ACUN033	EF962/EF967

Do Not Scale From This Drawing

Example Layout

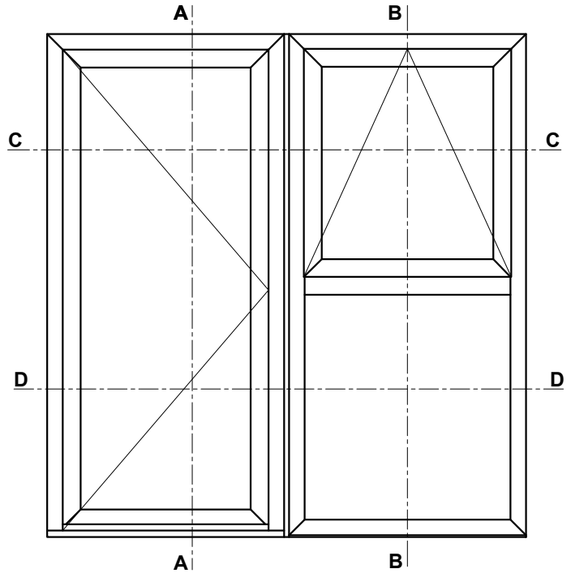

AA

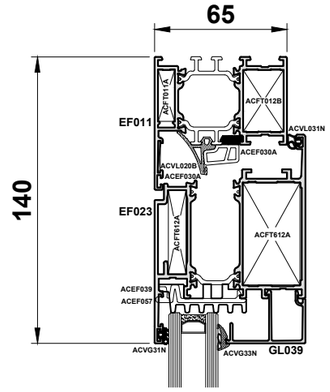

BB

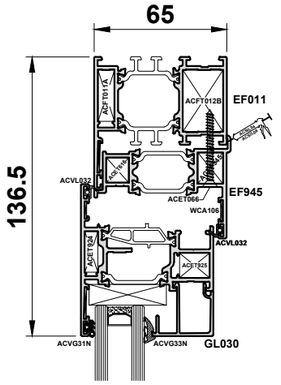

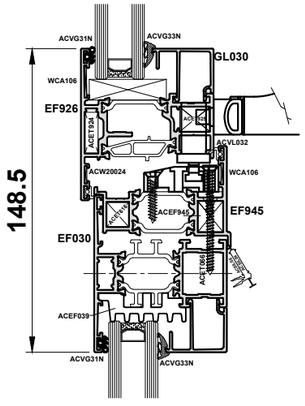

Scale 1:30

CC

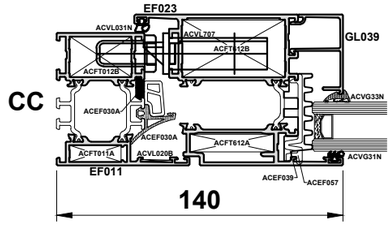

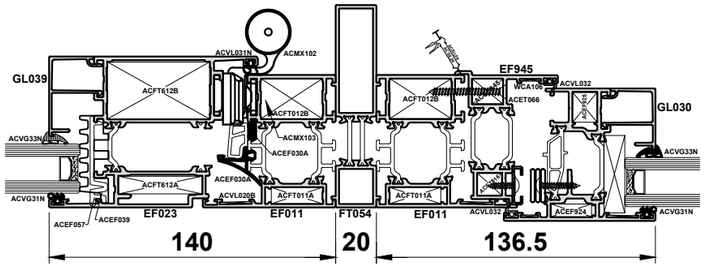

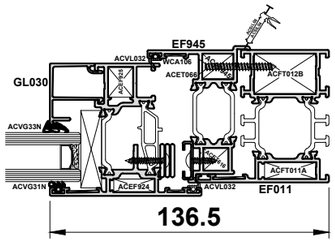

DD

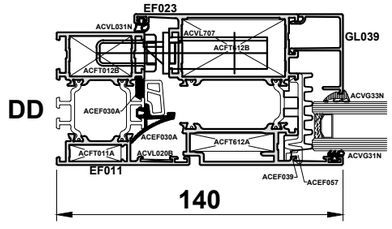

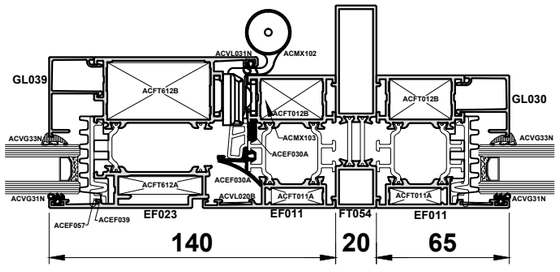

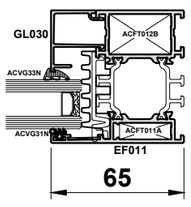

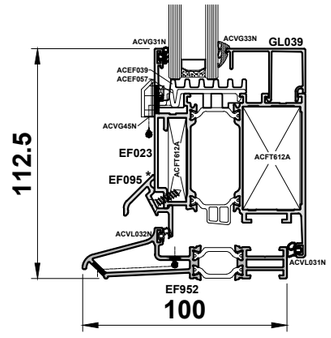

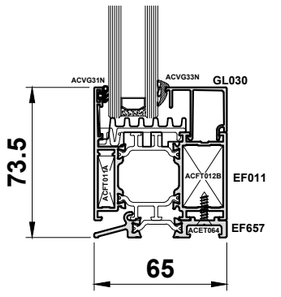

Smoke Vent

Smoke Vent Compliant to EN 12101-2

The details on this page show sections and accessories required to fabricate a smoke vent compliant with European smoke vent standard EN 12101-2.

The smoke vent was tested using SECO Ni 24 40 actuators supplied by SE Controls. Please contact SE Controls to discuss size limits for each project.

Please contact the Technical Department for further details on achieving compliance.

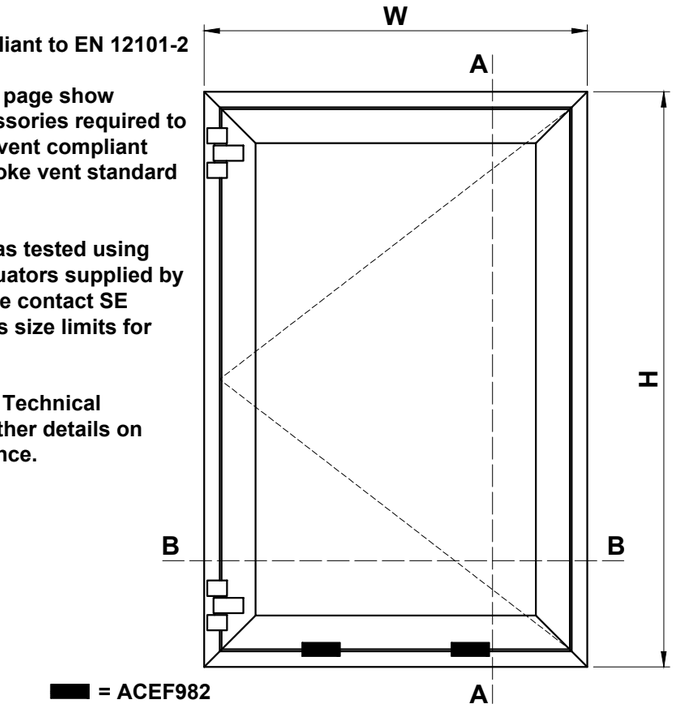

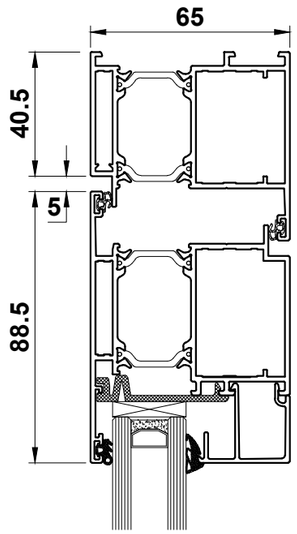

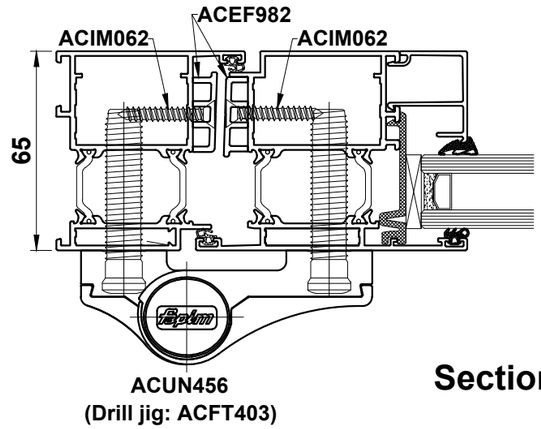

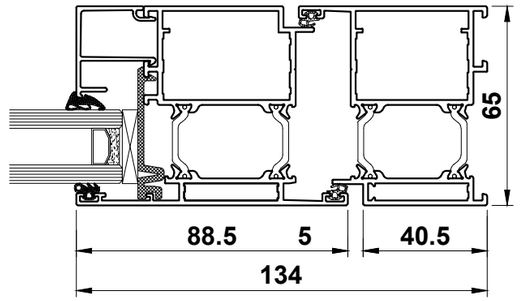

Section B - B

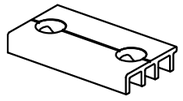

NOTE
ACEF982 sash support must be fitted to the sash & outer frame 250mm from sash rebate as shown.

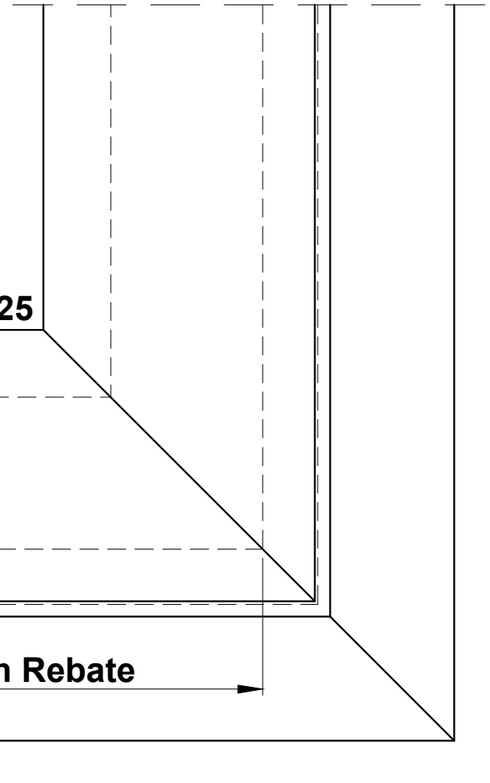

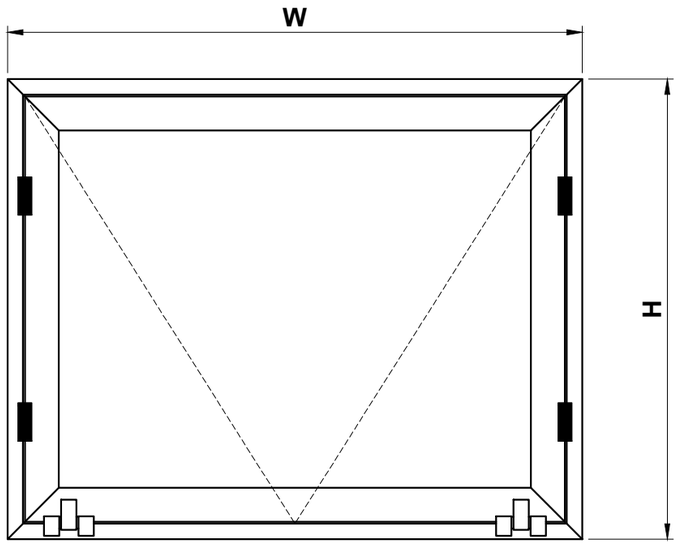

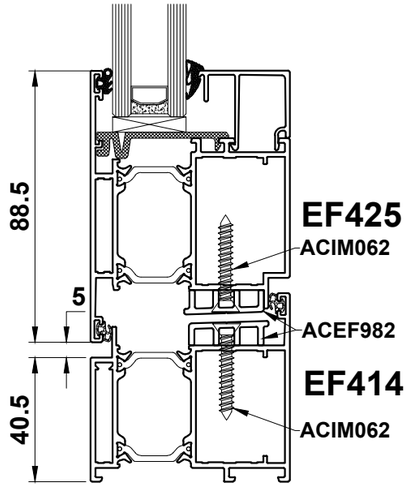

Section A - A

Do Not Scale From This Drawing

Double Bottom Hung Smoke Vent

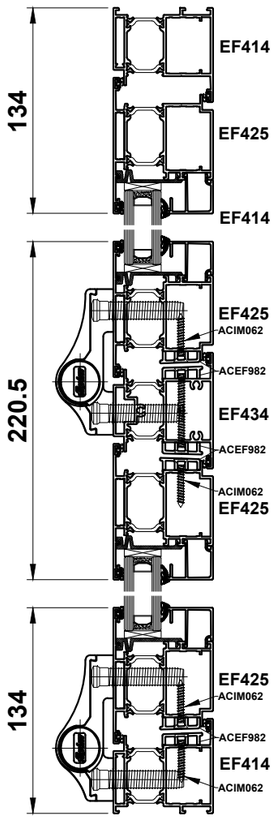

Section C - C

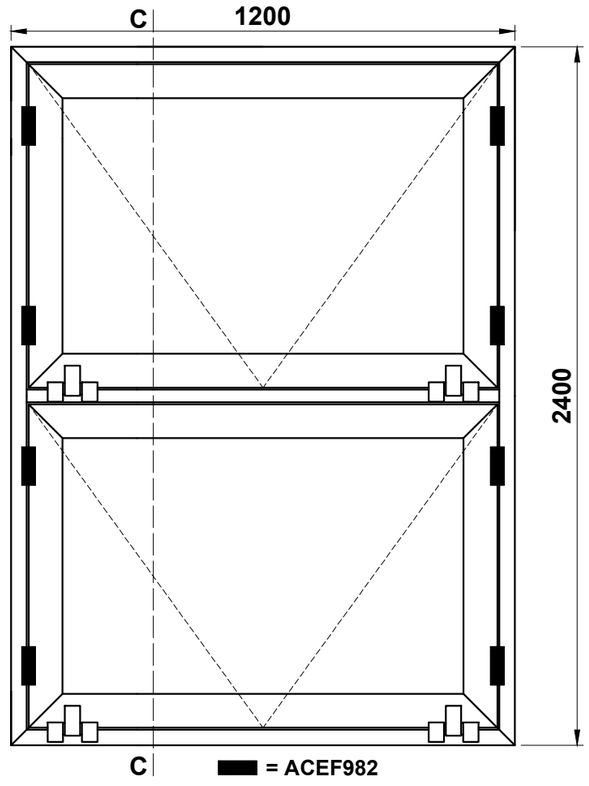

To increase the free area, two sashes may be used as shown.

The hardware shown on page E67 must be used to comply with EN 12101-2.

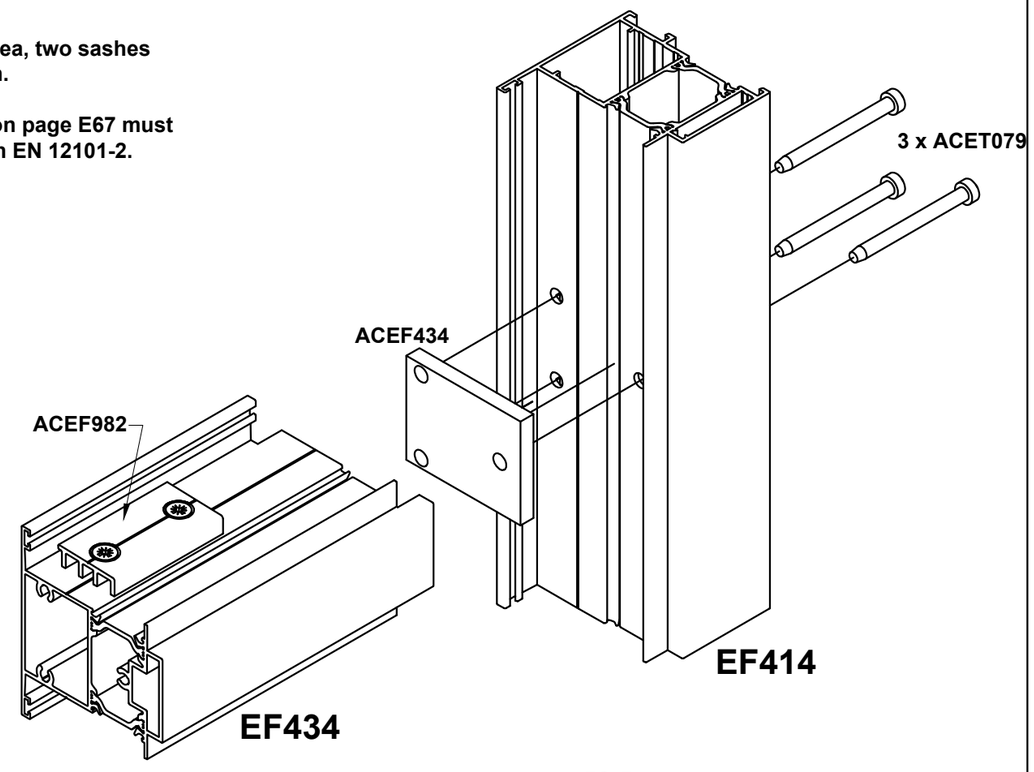

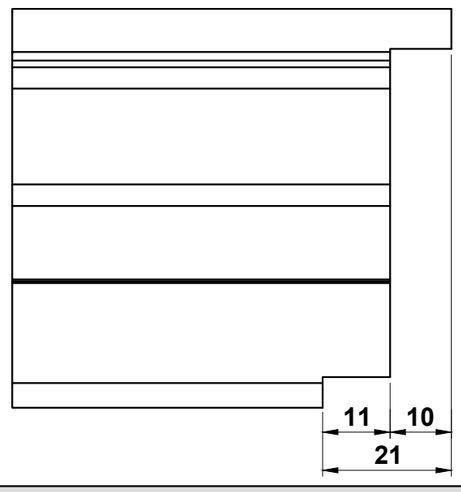

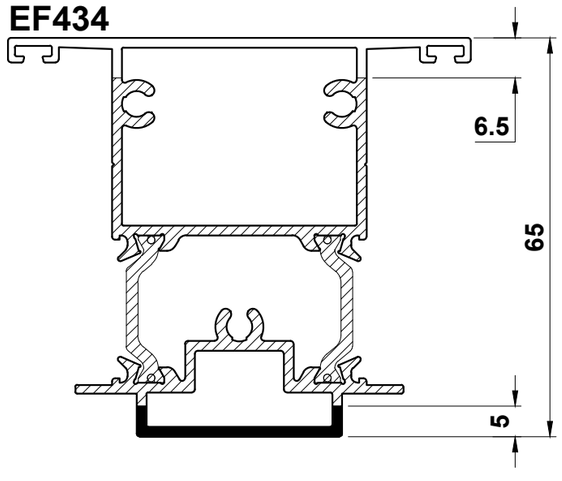

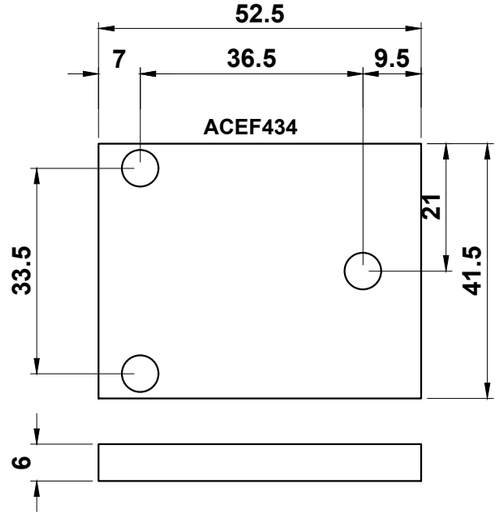

Section F - Cutting Tables

Sawing Tables

Cutting Information

Windows:

Externally Glazed Fixed Light	F03
Side Hung Casement	F04
Side Hung Casement next to Fixed Light	F05
Internally Glazed Fixed Light	F06
Tilt & Turn	F07
Bottom Hung Open In	F08
Horizontal Pivot	F09

Doors:

Single Open In Stepped Door	F10
Double Open In Stepped Door	F11
Single Open Out Stepped Door	F12
Double Open Out Stepped Door	F13
Single Open In Flat Door	F14
Double Open In Flat Door	F15
Single Open Out Flat Door	F16
Double Open Out Flat Door	F17

Section F - Cutting Tables

Cutting Information - Fixed Light Frame - Equal Leg EF910

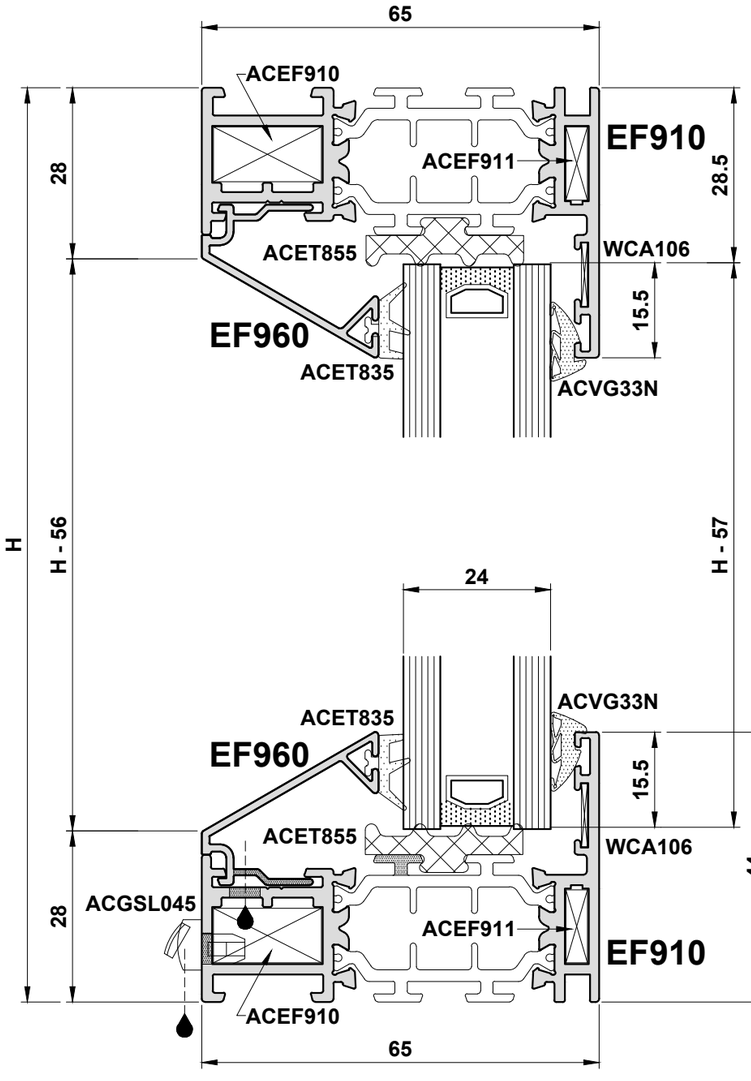

Sections

EF910		2		H
EF910		2		W
EF960		2		W - 48
EF960		2		H - 56

Glass
W - 57
H - 57

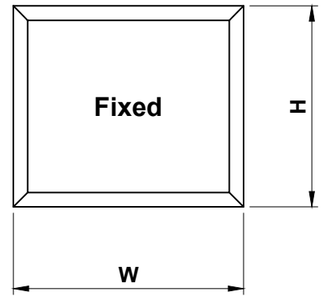

Accessories

ACEF910		4	Cleat Outerframe
ACEF911		4	Cleat Outerframe
ACET835		2(W+H)	E Gasket
ACET855		2(W+H)	Foam Insulation
ACVG33N		2(W+H)	Wedge Gasket
ACGSL045		2	Drainage Cap
WCA106		4	Chevron

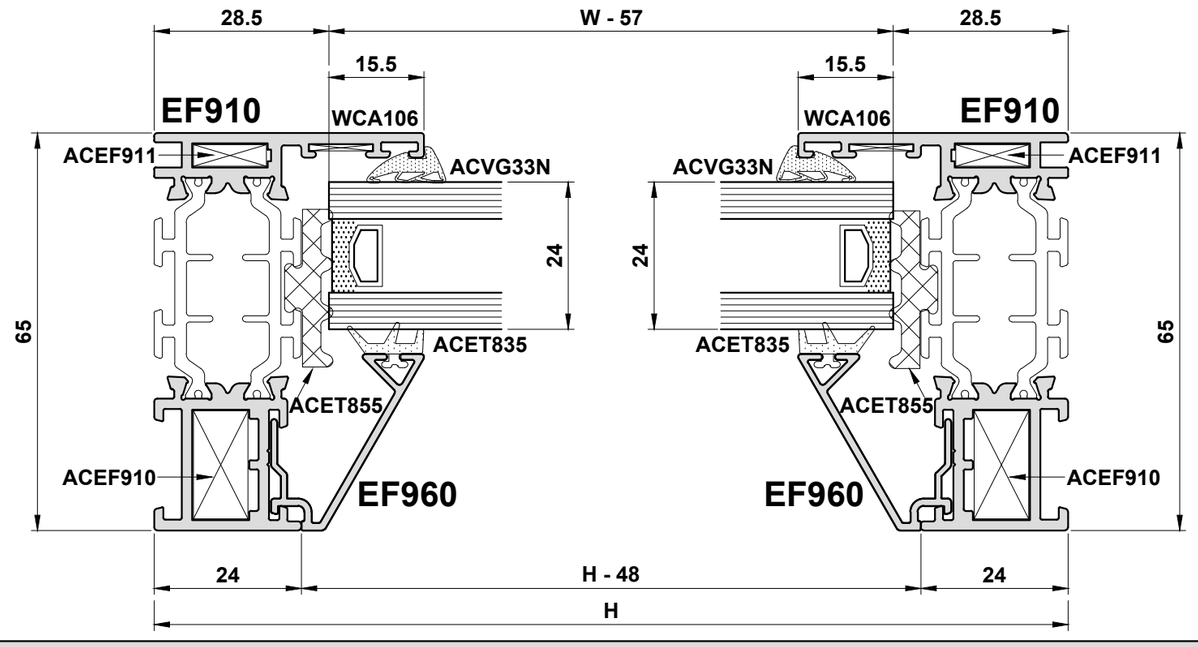

Do Not Scale From This Drawing

Cutting Information - Vent Frame using EF910 Outer Frame and EF926 Vent

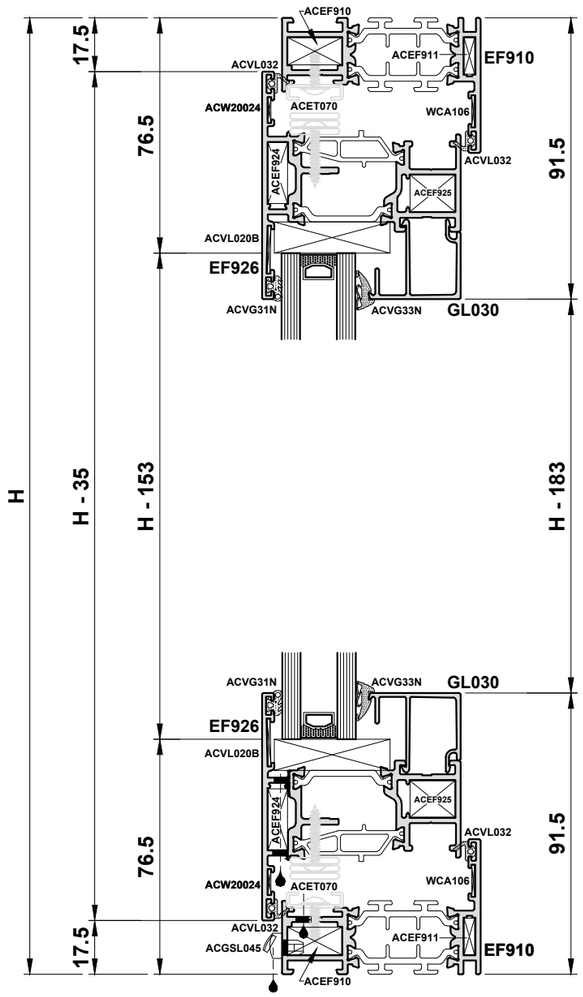

Sections

EF910		2		H
EF910		2		W
EF926		2		H - 35
EF926		2		W - 35
GL*		2		H - 183
GL*		2		W - 139

Accessories

ACET868		1	Espag Locking Handle
ACEF910		4	Cleat Outerframe
ACEF911		4	Cleat Outerframe
ACEF924		4	Cleat Sash
ACEF925		4	Cleat Sash
ACEF95*		1	Locking Espag
ACEF976		2(W+H-94)	EF926 Foam Insert
ACVG31N		2(W+H)	Gasket E
ACVG33N		2(W+H)	Wedge Gasket
ACGSL045		2	Drainage Cap
ACVL020B		4	Chevron
ACVL032		4(W+H)	Flipper Gasket
ACW20024		4	Chevron
AC**		2	Friction Stays
WCA106		8	Chevron
ACET652		2 Pairs	Pull-in Blocks

Glass
W - 153
H - 153

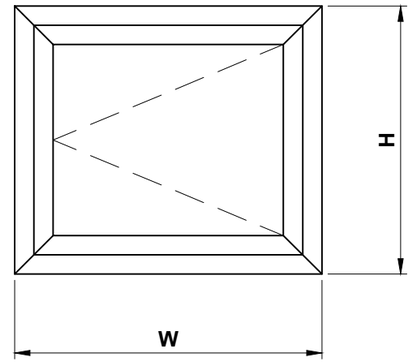

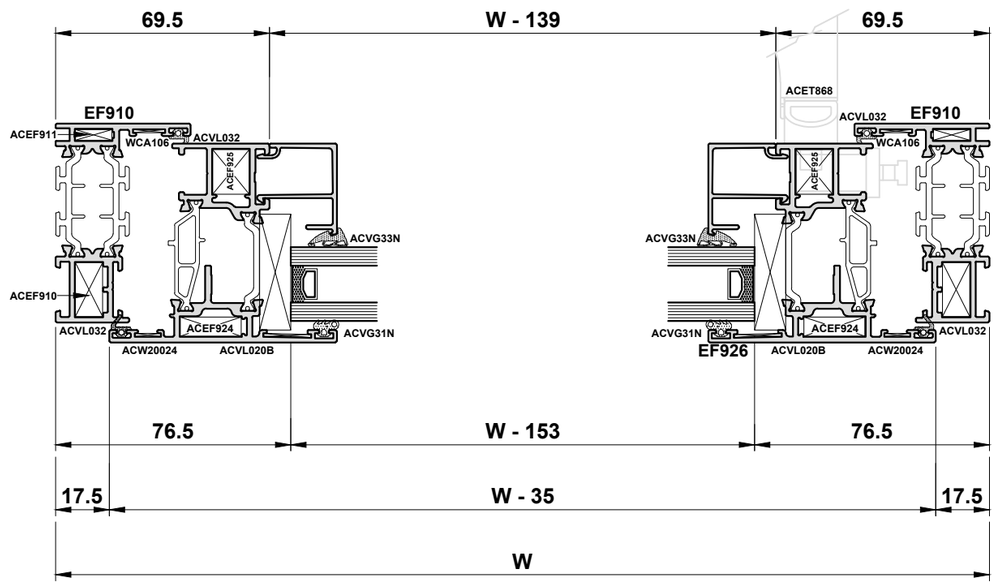

Do Not Scale From This Drawing

Cutting Information - Opening Vent adjacent to Externally Glazed Fixed Light

Profiles

EF910		2		H
EF910		2		W
EF926		2		H - 35
EF926		2		W1 - 23
EF930		1		H - 48
EF960		2		W2 - 36
EF960		2		H - 56
GL*		2		W1 - 127
GL*		2		H - 183

Accessories

ACET868		1	Espag Locking Handle
ACET855		(2xW2)+(4H)	Foam Insulation
ACEF910		4	Cleat Outerframe
ACEF911		4	Cleat Outerframe
ACEF924		4	Cleat Sash
ACEF925		4	Cleat Sash
ACEF95*		1	Locking Espag
ACEF976		2(W1-82)+2(H-94)	EF926 Foam Insert
ACVG31N		(2W)+(4H)	Gasket E
ACVG33N		(2W)+(4H)	Wedge Gasket
ACGSL045		2	Drainage Cap
ACVL020B		4	Chevron
ACVL032		(4W)+(4H)	Flipper Gasket
ACW20024		4	Chevron
AC**		2	Friction Stays
WCA106		16	Chevron
ACET652		2 Pairs	Pull-in Blocks

Glass
W1 - 141 x H - 153
W2 - 45 x H - 57

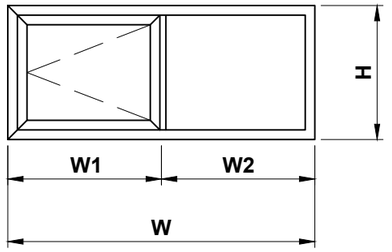

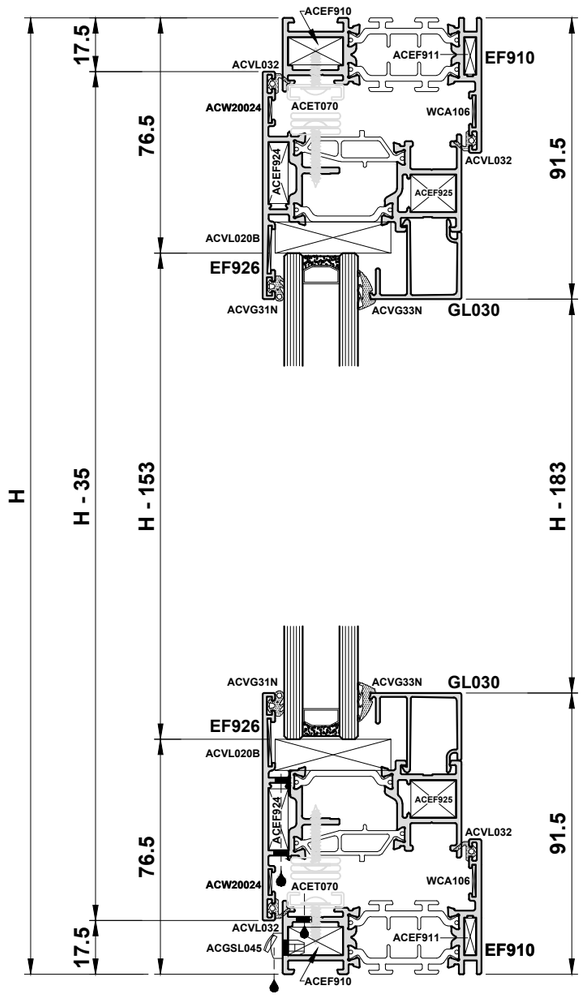

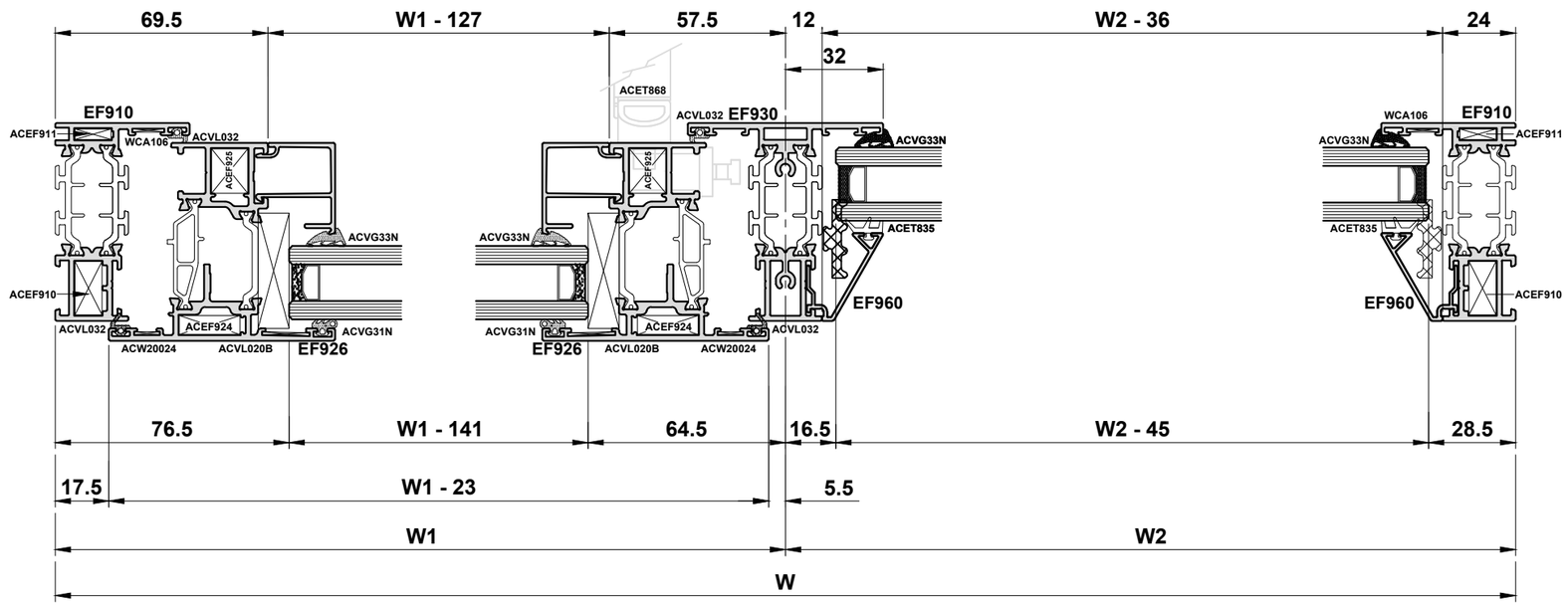

Do Not Scale From This Drawing

Cutting Information - Fixed Light

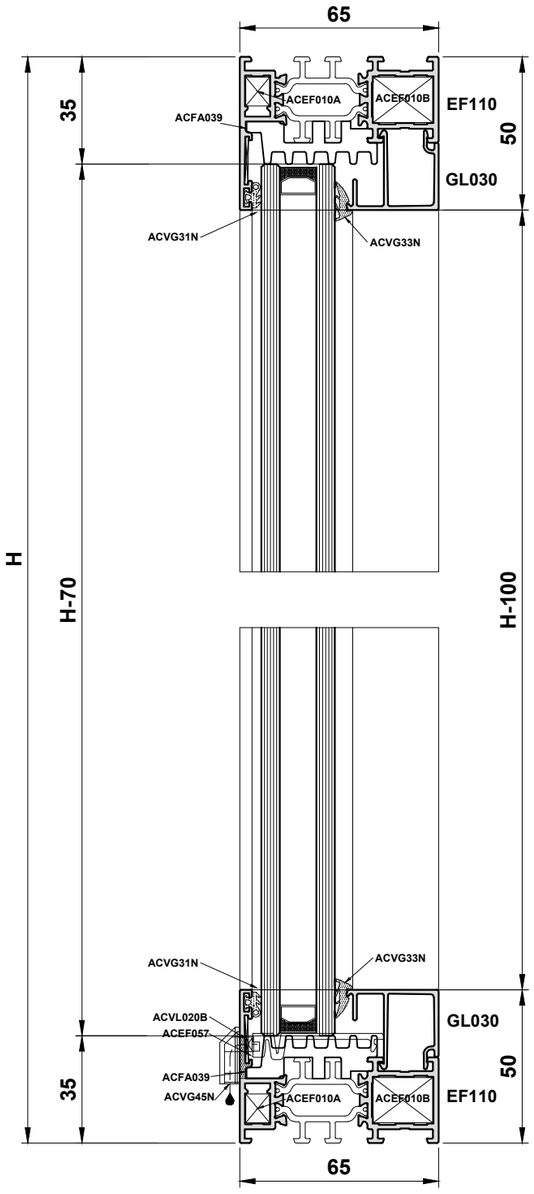

Profiles

EF110		2		H
EF110		2		W
GL*		2		W - 56
GL*		2		H - 100

Accessories

ACEF010A		Cleat	4
ACEF010B		Cleat	4
ACVL020B		Chevron	4
ACEF057		Glazing support	4
ACVG45N		Drainage cap	2
ACVG31N		3mm External Gasket	2W+2H-320
ACVG33N		4mm Wedge Gasket	2W+2H-320
ACEF039		Glazing Insulation strip	2W+2H-160

Glass
W - 70
H - 70

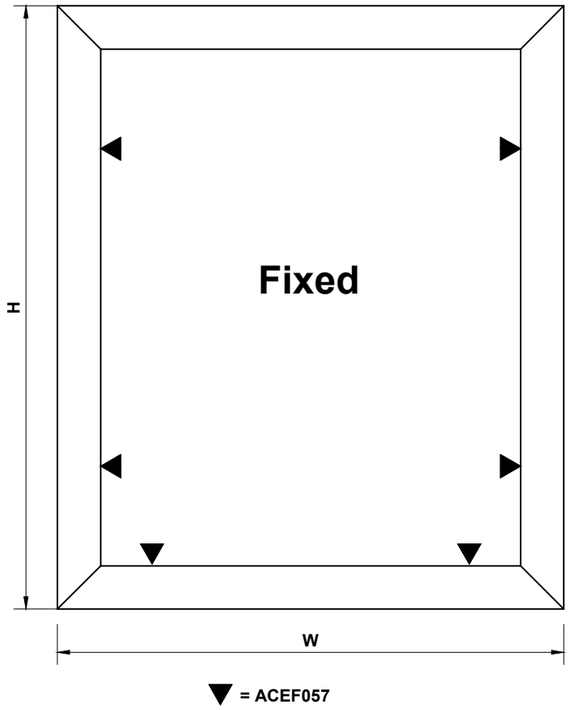

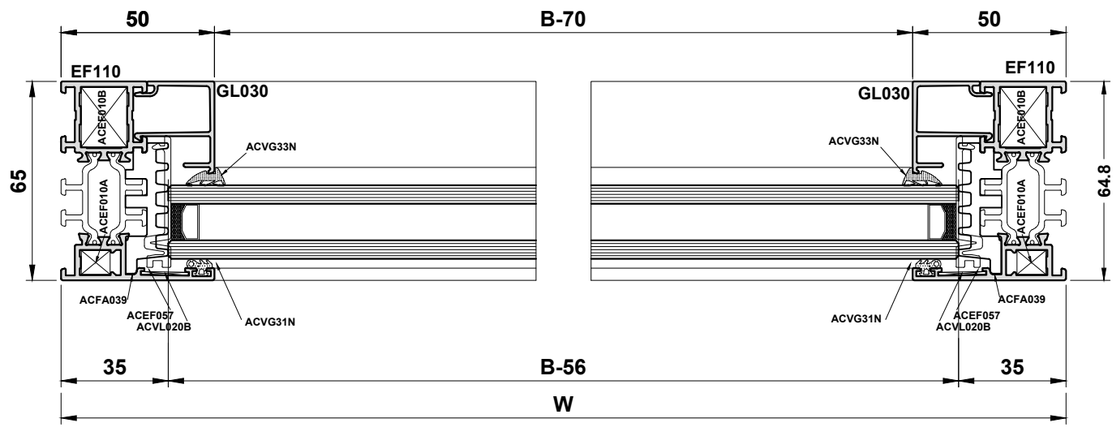

Do Not Scale From This Drawing

Cutting Information - Tilt and Turn Window

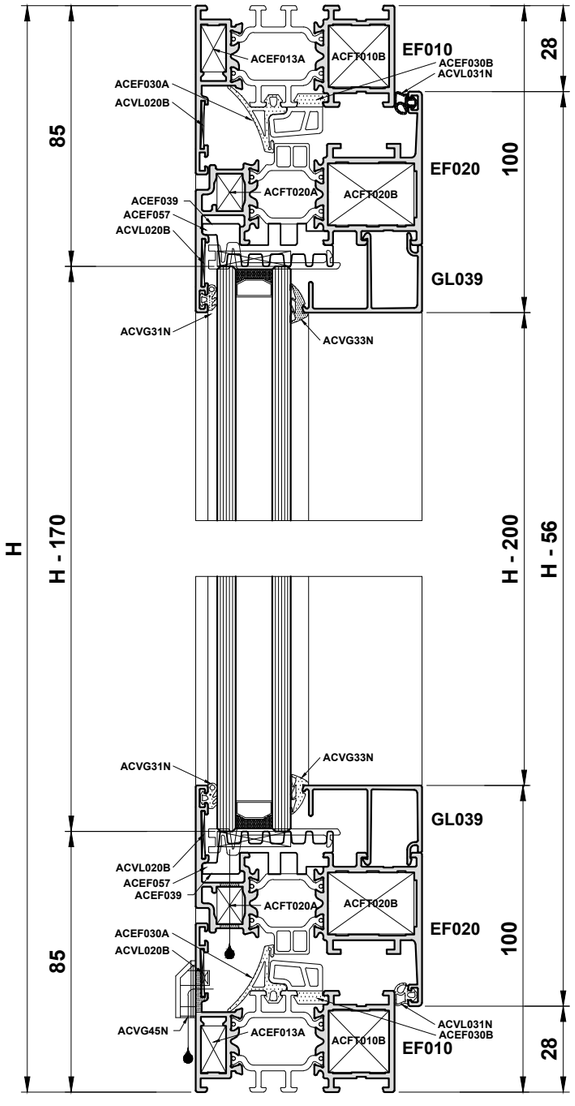

Profiles

EF010		2		H
EF010		2		W
EF020		2		W - 56
EF020		2		H - 56
GL*		2		W - 156
GL*		2		H - 200

Accessories

ACFT010B		Cleat	4
ACEF013B		Cleat	4
ACFT020A		Cleat	4
ACFT020B		Cleat	4
ACVL020B		Chevron	12
ACEF057		Glazing support	6
ACVG31N		3mm External Gasket	2W+2H - 800
ACVG33N		4mm Wedge Gasket	2W+2H - 800
ACEF039B		Glazing Insulation strip	2W+2H - 800
ACEF030A		Central Gasket Outward	2W+2H - 320
ACEF030B		Central Gasket inward	2W+2H - 320
ACVL031N		Gasket	2W+2H - 320
ACVG45N		Drainage cap	2

Glass
W - 170
H - 170

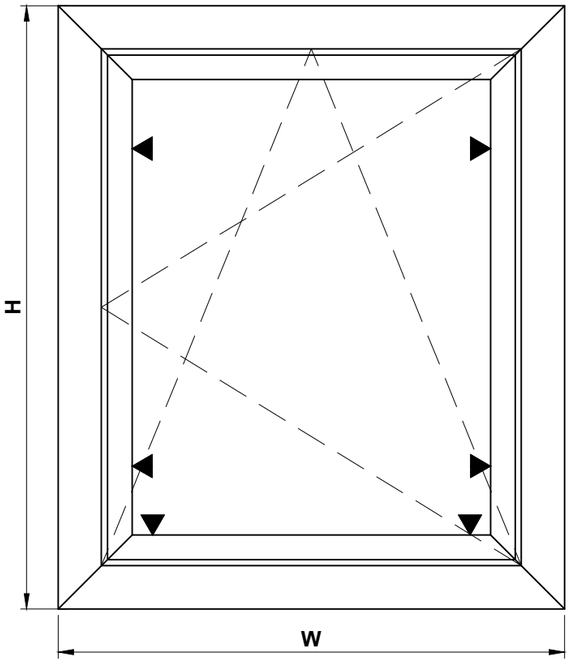

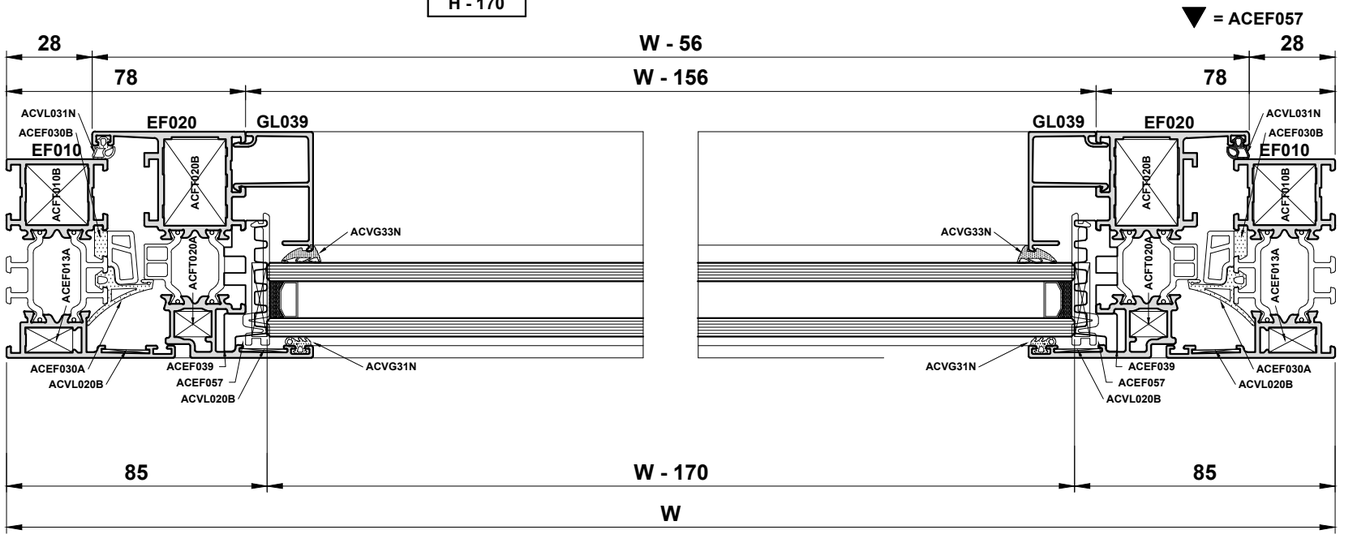

Do Not Scale From This Drawing

Cutting Information - Tilt Window

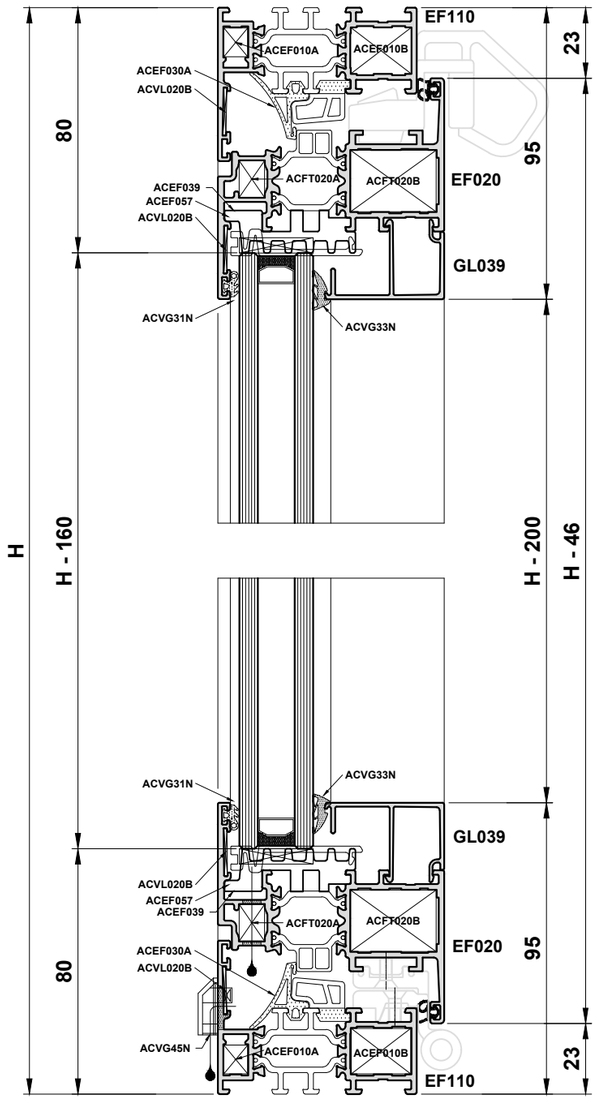

Profiles

EF110		2		H
EF110		2		W
EF020		2		W - 46
EF020		2		H - 46
GL*		2		W - 146
GL*		2		H - 190

Glass sizes

W - 160
H - 160

Accessories

ACEF010A		Cleat	4
ACEF010B		Cleat	4
ACFT020A		Cleat	4
ACFT020B		Cleat	4
ACVL020B		Chevron	8
ACEF057		Glazing support	6
ACVG45N		Drainage cap	2
ACVG31N		3mm External Gasket	2W+2H - 640
ACVG33N		4mm Wedge Gasket	2W+2H - 640
ACEF039B		Glazing Insulation strip	2W+2H - 480
ACEF030A		Central Gasket Outward	2W+2H - 160
ACEF030B		Central Gasket inward	2W+2H - 160
ACFT031A		Corner Gasket	4
ACVL031N		Gasket	2W+2H - 160

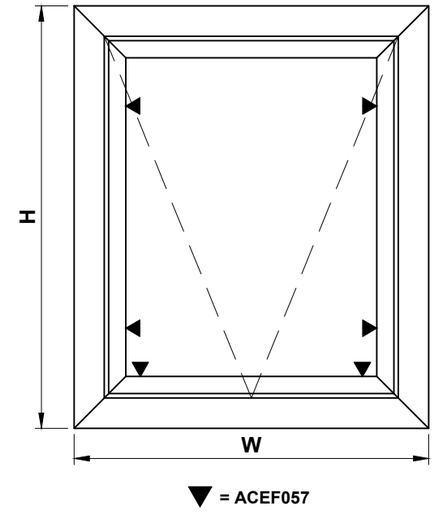

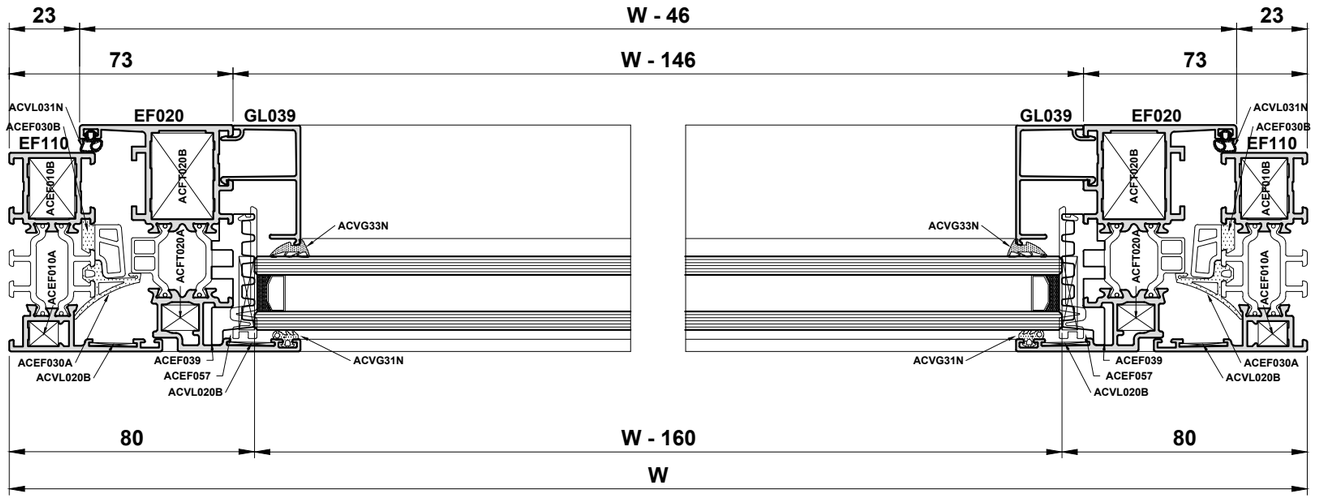

Do Not Scale From This Drawing

Cutting Information - Pivot Window

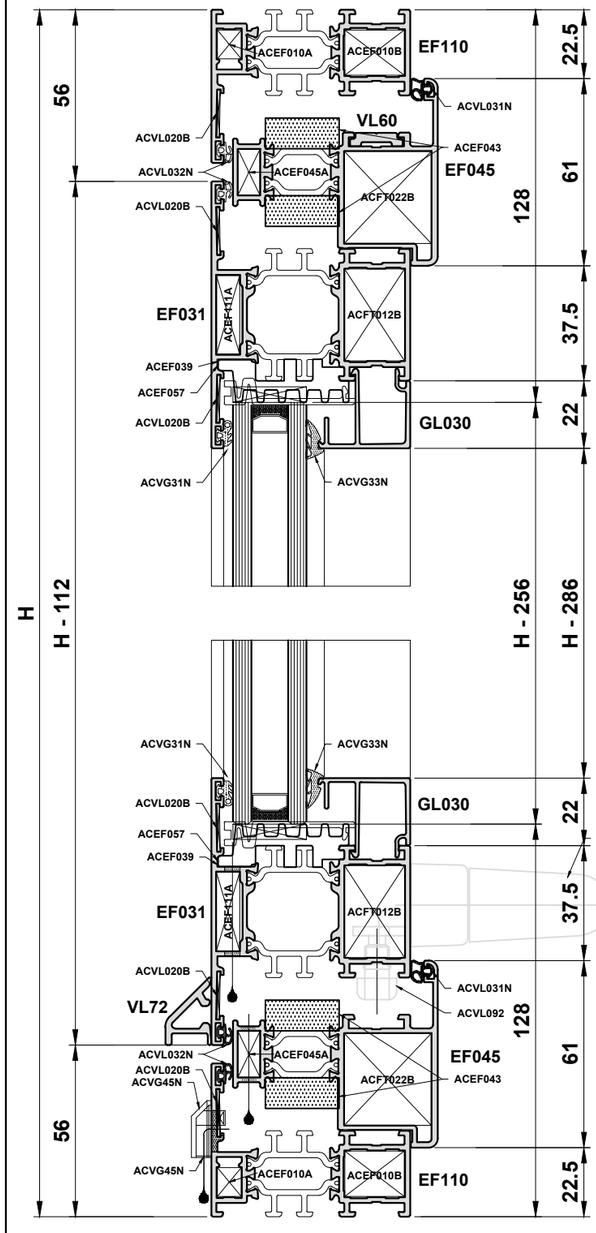

Profiles

EF110		2		H
EF110		2		W
EF045		1		W - 45
EF045		1		W - 45
EF045		1		H/2 - 23
EF045		1		H/2 - 23
EF045		1		H/2 - 23
EF045		1		H/2 - 23
EF031		2		W - 112
EF031		2		H - 112
GL*		2		W - 242
GL*		2		H - 286
VL72		1		W - 122
VL60		1		W - 375
VL60		2		H/2 - 250
VL60		1		H/2 - 176
VL60		1		H/2 - 207

Glass sizes

W - 256
H - 256

Hmin = 700mm	Wmin = 500mm
Hmax = 2000mm	Wmax = 2400mm
Hmax = 2200mm	Wmax = 2200mm

Accessories

ACEF010A	Cleat	4
ACEF010B	Cleat	4
ACEF045A	Cleat	4
ACFT022B	Cleat	4
ACEF111A	Cleat	4
ACFT012B	Cleat	4
ACVL020B	Chevron	12
ACEF057	Glazing support	8
ACVG45N	Drainage cap	2
ACVG31N	3mm External Gasket	2W+2H - 1050
ACVG33N	4mm Wedge Gasket	2W+2H - 1050
ACEF039	Glazing Insulation strip	2W+2H - 1750
ACEF043	Insulation strip	4W+4H - 750
ACVL031N	5mm Gasket	2W+2H - 180
ACVL032N	4mm Gasket	4W+4H - 800
ACVL090	Pivot Box 180°	1
ACVL091	Pivot Box 180° + ventilation	1
ACVL092	Window Gearing	1
ACVL093/094	Handle	1
ACVL059	VL72 End Cap	1
ACVL061	VL72 Rivet	at 300mm ctrs

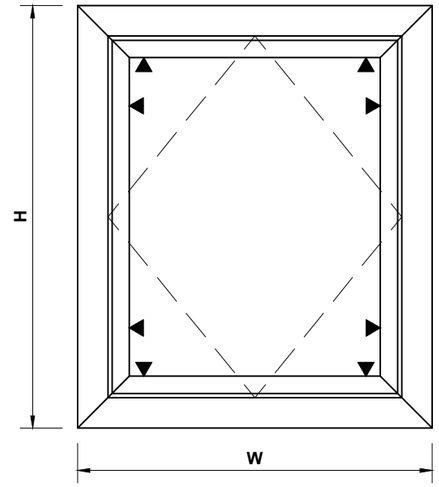

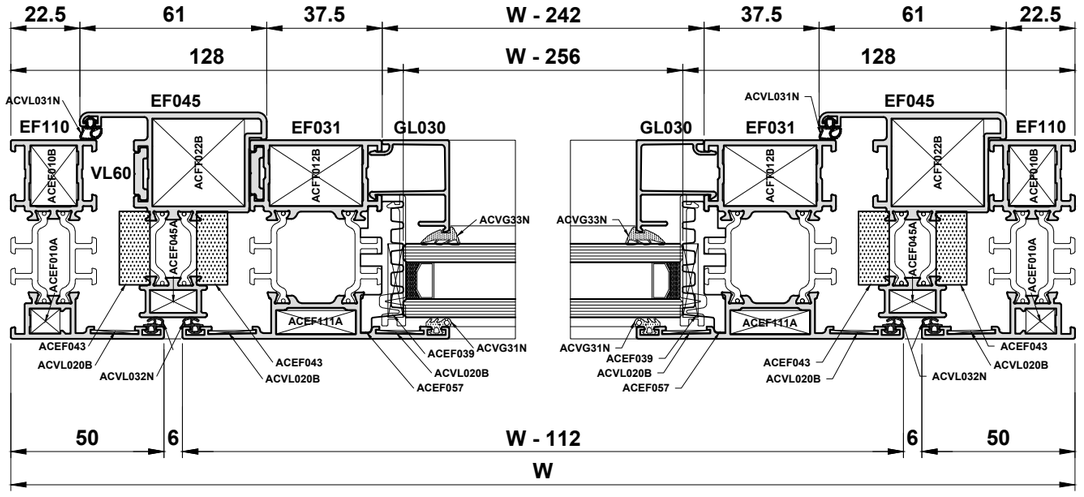

Do Not Scale From This Drawing

Cutting Information: Single Open In Door with EF011 and EF023

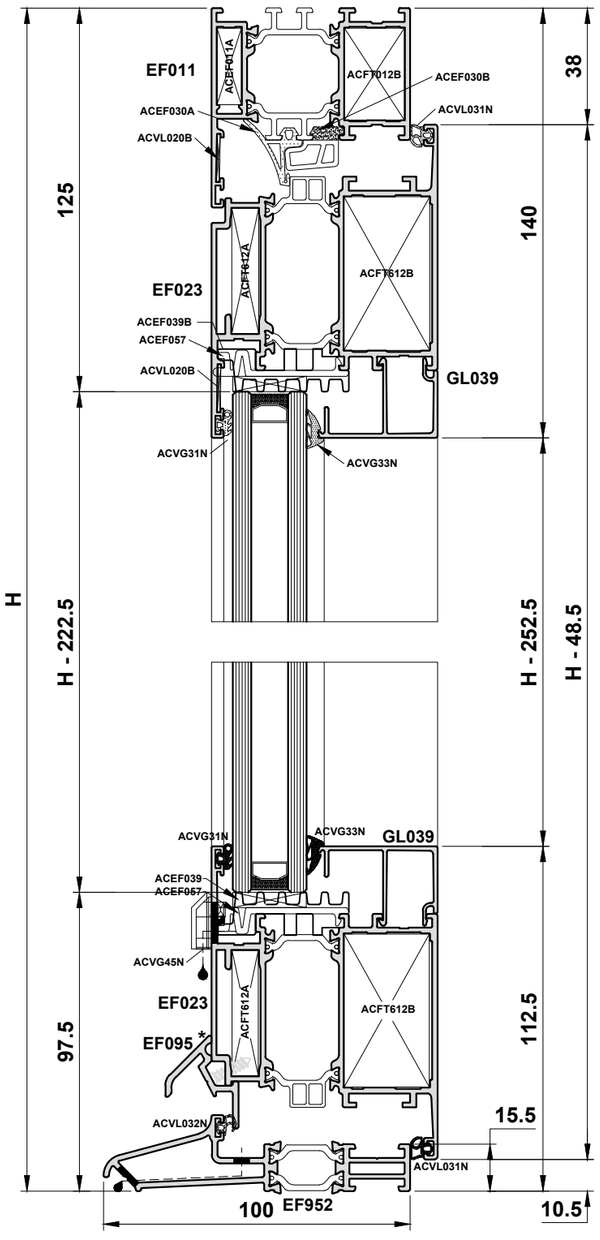

Profiles

EF011		1		H - 15.5
EF011		1		W
EF011		1		H - 15.5
EF023		2		W - 76
EF023		2		H - 48.5
EF952		1		W
EF095		1		W - 144
GL*		2		W - 236
GL*		2		H - 252.5

Glass sizes

W-250
H - 222.5

See Pages E54 - E59 for lock details

Accessories

ACEF011A		Cleat	2
ACFT012B		Cleat	2
ACFT612A		Cleat	4
ACFT612B		Cleat	4
ACVL020B		Chevron	6
ACEF057		Glazing support	4
ACVG45N		Drainage cap	2
ACMX102		Door Hinge	3
ACVG31N		3mm External Gasket	2W+2H - 980
ACVG33N		4mm Wedge Gasket	2W+2H - 980
ACEF039B		Glazing Insulation strip	2W+2H - 820
ACEF030A		Gasket	W+2H - 290
ACEF030B		Gasket	W+2H - 290
ACVL031N		5mm Gasket	2W+2H - 290
ACEF094		EF952 Fixing Bracket	1 Pair
ACVL032N		Threshold Gasket	W - 72
ACEF966		EF952 End Cap	1 Pair
ACEF095		EF095 End Cap	1 Pair

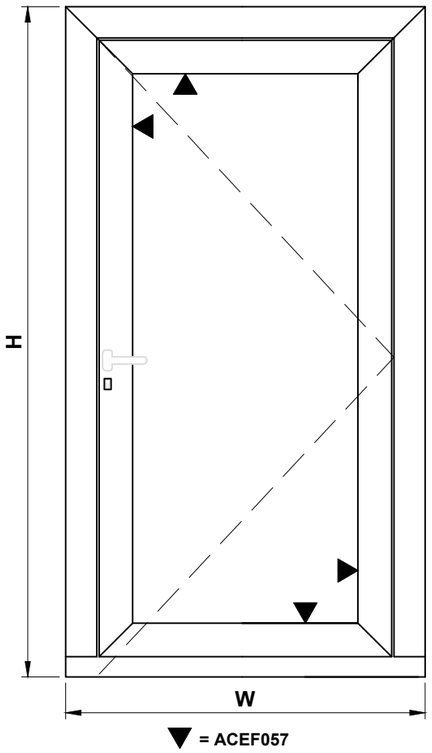

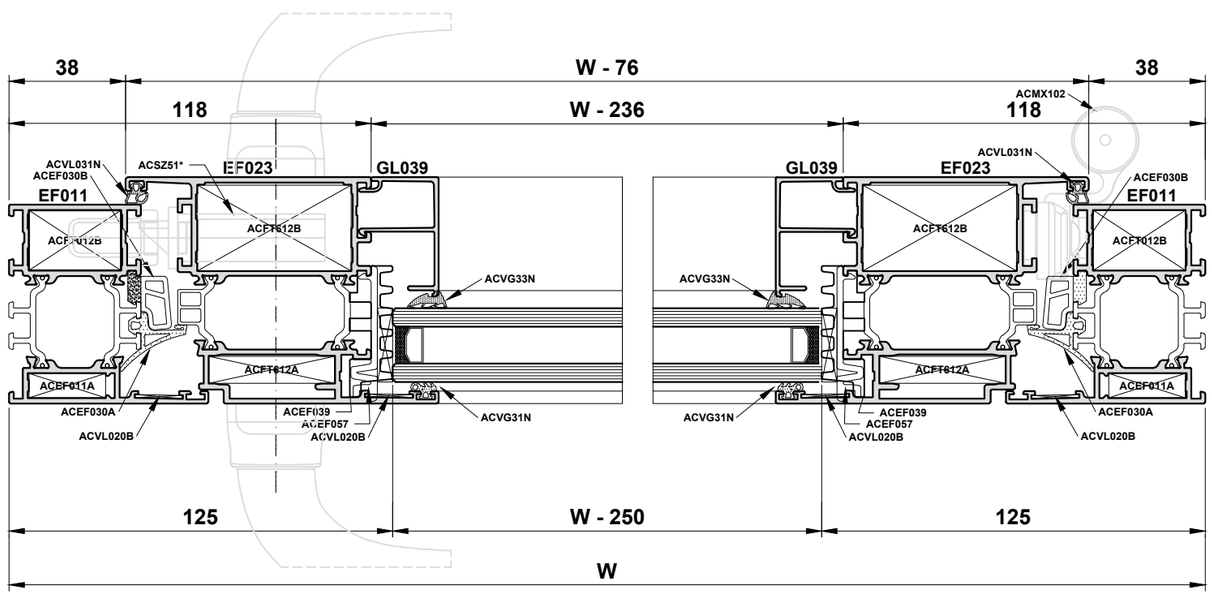

Do Not Scale From This Drawing

Cutting Information: Double Open In Door with EF011 and EF023

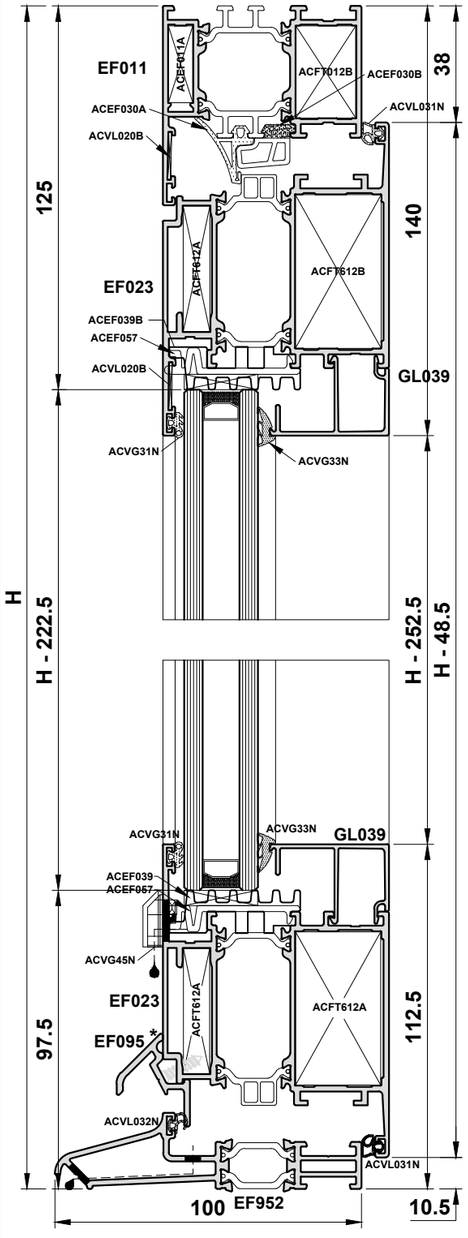

Profiles

EF011		1		H - 15.5
EF011		1		W
EF011		1		H - 15.5
EF023		4		W/2 - 40.5
EF023		4		H - 48.5
EF040		1		H - 109.5
EF952		1		W
EF095		2		W/2 - 108.5
GL*		4		W/2 - 200.5
GL*		4		H - 252

Glass Sizes (x2)

W/2-214.5
H - 222.5

Accessories Continued

ACVL031N	5mm Gasket	2W+3H -220
ACEF094	EF952 Fixing Bracket	1 Pair
ACEF966	EF952 End Cap	1 Pair
ACVL032N	Threshold Gasket	W - 72
ACET062	ACVL432 Fixings	4
ACET064	EF095 Fixings	Every 200mm
ACEF095	EF095 End Cap	1 Pair
ACEF957	EF040 End Cap	1
ACEF958	L / Threshold End Caps	1

Accessories

ACEF011A	Cleat	2
ACFT012B	Cleat	2
ACFT612A	Cleat	8
ACFT612B	Cleat	8
ACVL020B	Chevron	10
ACEF057	Glazing support	8
ACVG45N	Drainage Cap	4
ACEF055	Double Casement Sealing	1
ACEF443	Closer Section	2
ACVL432	Bolt Lock	2
ACVL429	Keep for ACVL432	2
ACMX102	Door Hinge	4
ACVG31N	3mm External Gasket	2W+4H -1800
ACVG33N	4mm Wedge Gasket	2W+4H -1800
ACEF039B	Glazing Insulation strip	2W+4H -1510
ACEF030A	Gasket	W+3H -440
ACEF030B	Gasket	W+3H -440

See Pages E54 - E59 for lock details

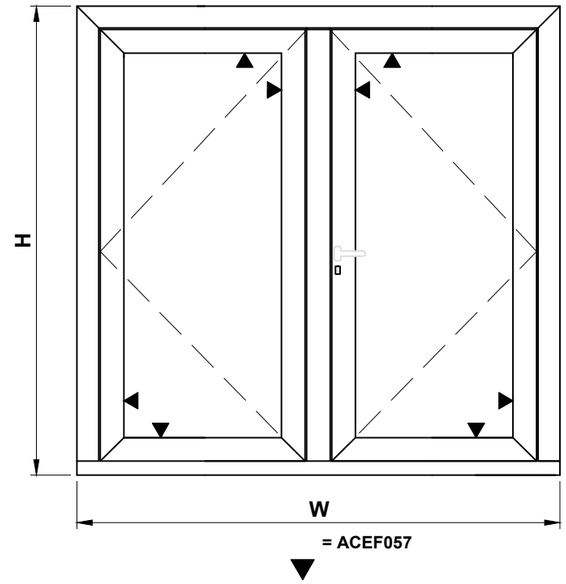

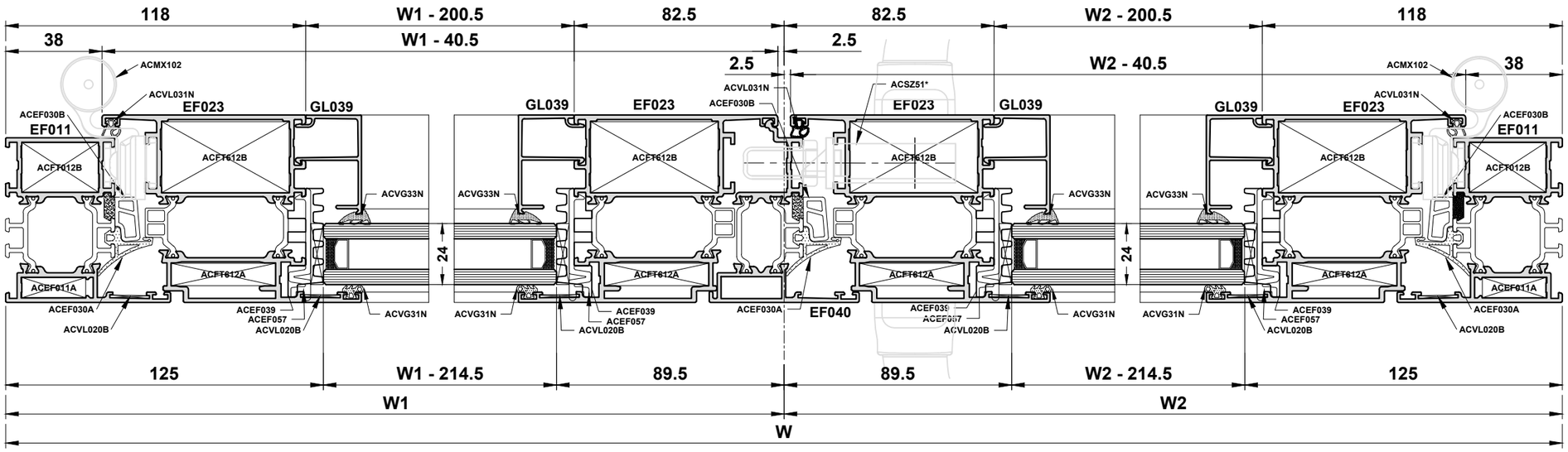

Do Not Scale From This Drawing

Cutting Information: Single Open Out Door using EF120 & Low Threshold

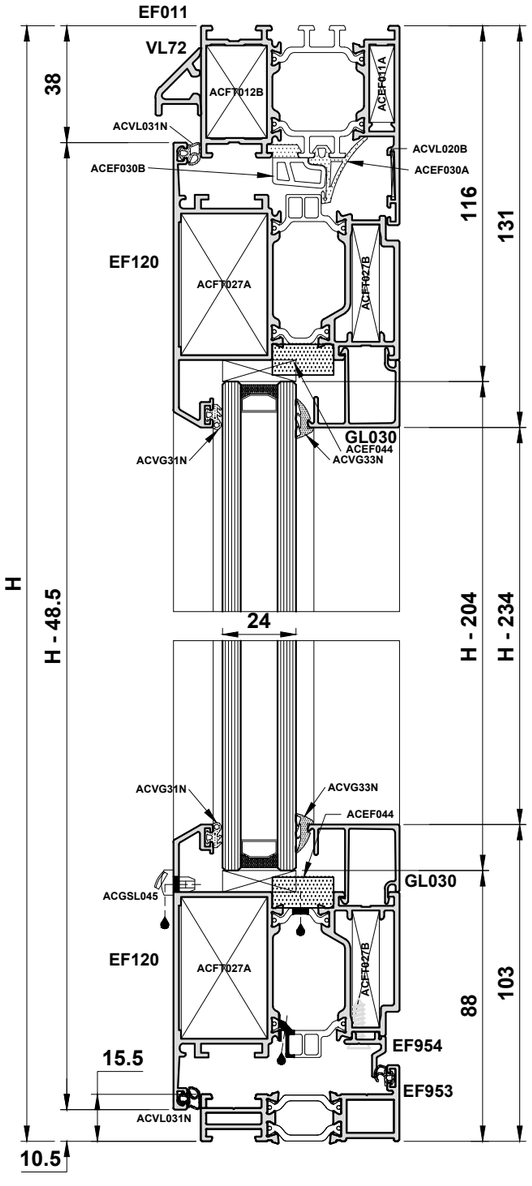

Profiles

EF011		1		H - 15.5
EF011		1		W
EF011		1		H - 15.5
EF953		1		W
EF954		1		W - 124
EF120		2		W - 76
EF120		2		H - 48.5
GL*		2		W - 218
GL*		2		H - 234
VL72		1		W

Glass Sizes

W - 232
H - 204

Accessories

ACEF011A	Cleat	2
ACFT012B	Cleat	2
ACFT027A	Cleat	4
ACFT027B	Cleat	4
ACVL020B	Chevron	6
ACGSL045	Drainage Cap	4
ACMX102	Door Hinge	3
ACVG31N	3mm External Gasket	2W+2H-900
ACVG33N	4mm Wedge Gasket	2W+2H-900
ACEF044	Insulation Strip	2W+2H-750
ACEF030A	Gasket	W+2H-290
ACEF030B	Gasket	W+2H-290
ACVL031N	5mm Gasket	W+2H-290
ACVL032N	4mm Gasket	W
ACEF967	Threshold End Cap	
ACEF094	Threshold Fixing Bracket	2
ACET064	EF954 Fixings	Every 200mm

See Pages E54 - E59 for lock details

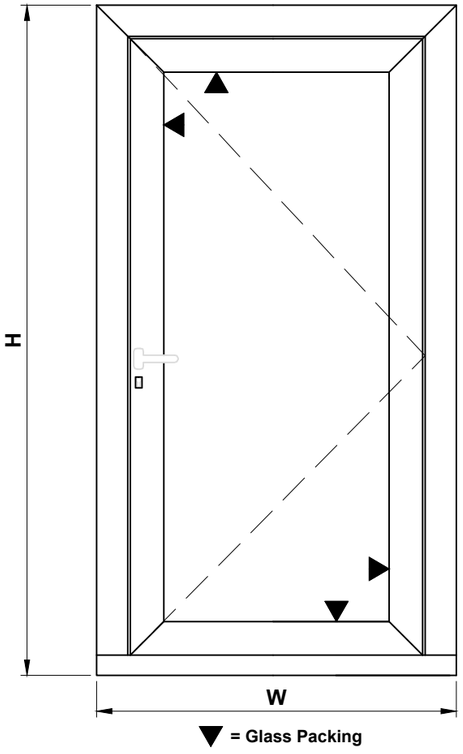

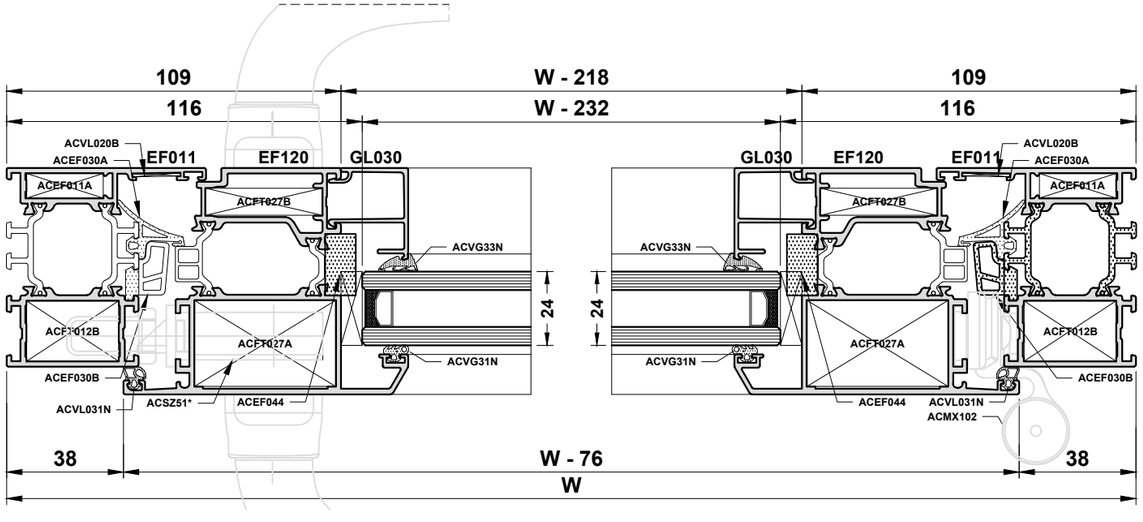

Do Not Scale From This Drawing

Cutting Information: Double Open Out Door using EF120 & Low Threshold

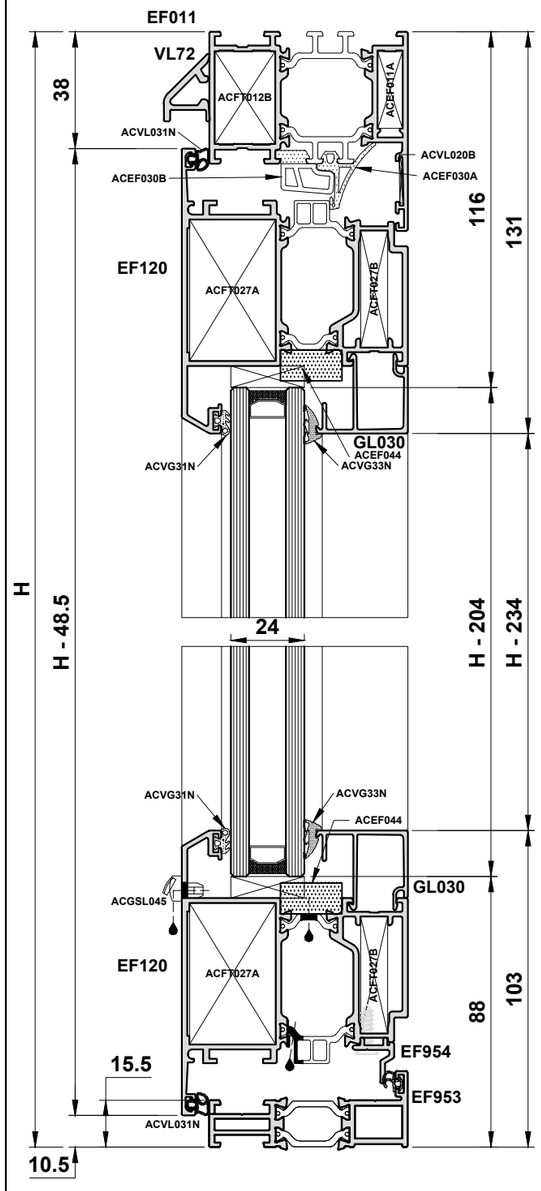

Profiles

EF011		1		H - 15.5
EF011		1		W
EF011		1		H - 15.5
EF953		1		W
EF954		1		W/2 -88.5
EF120		4		W/2 - 40.5
EF120		4		H - 48
EF040		1		H - 109.5
GL*		4		W/2 - 182.5
GL*		4		H - 234
VL72		1		W

Glass Sizes 2x

W/2 - 196.5
H - 204

Accessories

ACEF011A		Cleat	2
ACFT012B		Cleat	2
ACFT027A		Cleat	8
ACFT027B		Cleat	8
ACVL020B		Chevron	2
ACGSL045		Drainage Cap	4
ACEF055		Double Casement Sealing	1
ACVL432		Bolt Lock	2
ACVL429		Keep for ACVL432	2
ACMX102		Door Hinge	6
ACVG31N		3mm External Gasket	2W+2H-900
ACVG33N		4mm Wedge Gasket	2W+2H-900
ACEF044		Insulation Strip	2W+4H-750
ACEF030A		Gasket	W+3H-290
ACEF030B		Gasket	W+3H-290
ACVL031N		5mm Gasket	W+3H-290
ACEF967		Threshold End Cap	1 Pair
ACEF094		Threshold Fixing Bracket	2
ACET062		ACVL432 Fixings	4
ACET064		EF954 Fixings	Every 200mm
ACEF957		EF040 End Cap	1
ACEF958		L / Threshold End Caps	1

See Pages E54 - E59 for lock details

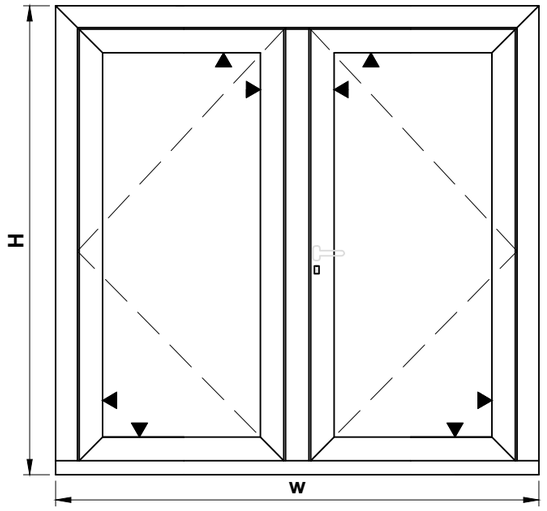

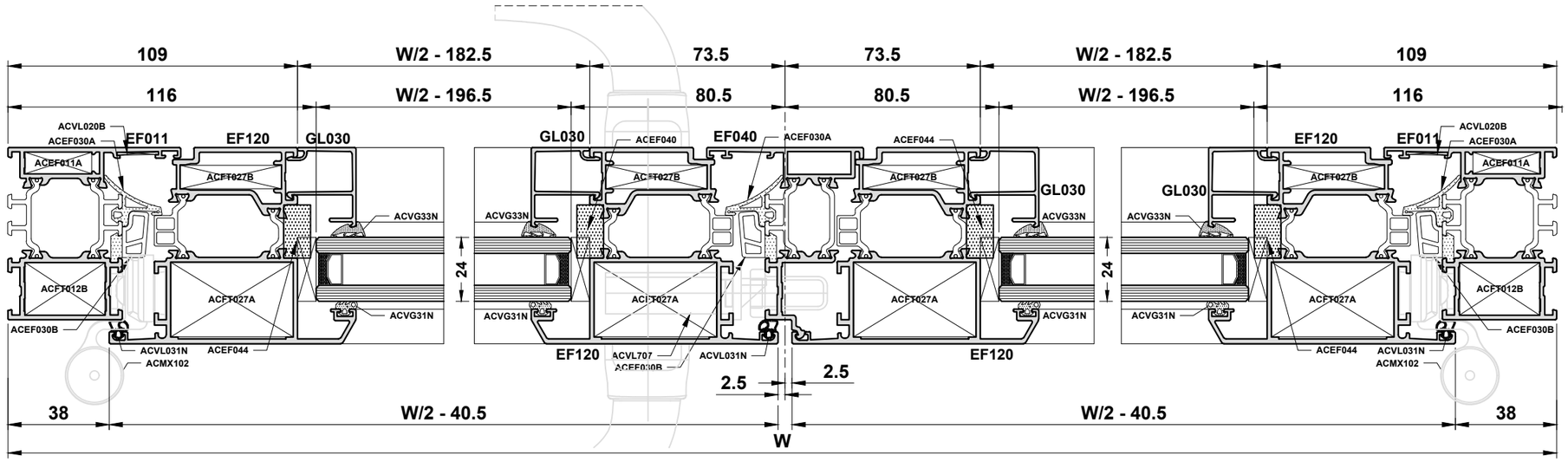

Do Not Scale From This Drawing

Cutting Information: Single Open In Door using EF415 and EF424 with Low Threshold

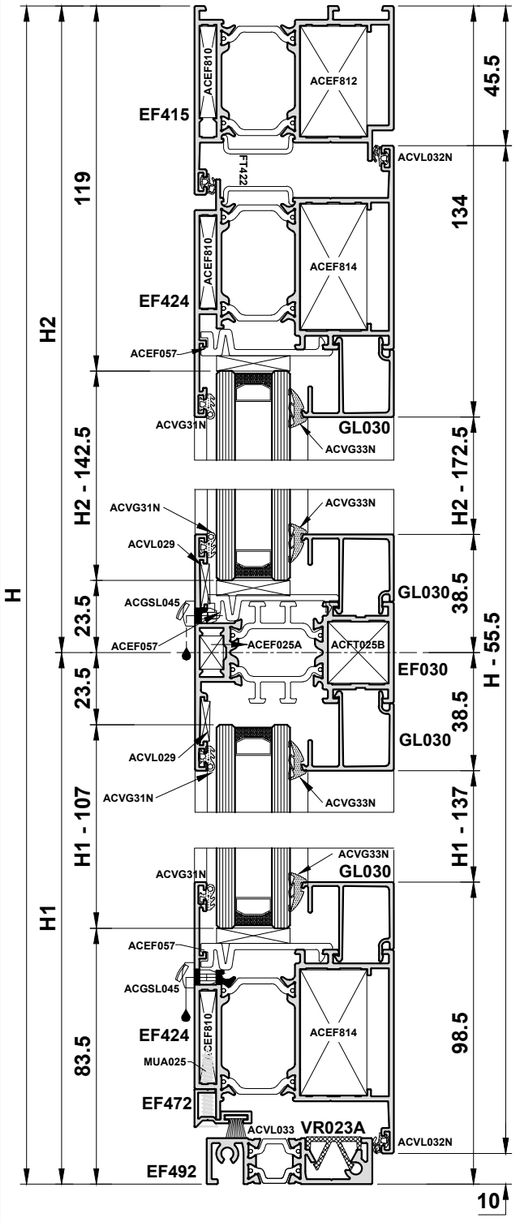

Profiles

EF415		1		H
EF415		1		W
EF415		1		H
EF424		2		H - 55.5
EF424		2		W - 91
EF030		1		W - 224
GL*		4		W - 224
GL*		2		H1 - 137
GL*		2		H2 - 172.5
EF493		1		W - 101
VR023A		1		W - 101
EF472		1		W - 137
FT422		1		W - 118
FT422		1		W - 84.5
FT422		1		H - 90
FT422		1		H - 90
FT422		2		H - 82

Glass Sizes

2x W - 238
H1 - 107 / H2 =142.5

Accessories

ACEF810		Cleat	6
ACEF812		Cleat	2
ACEF814		Cleat	4
ACEF025A		Cleat	2
ACFT025B		Cleat	2
ACEF057		Glazing Support	8
ACVL020B		Chevron	4
ACVL029		Strengthening piece	4
ACGSL045		Drainage Cap	2
ACEF694		Threshold end piece	1
ACUN450		Door Hinge	3
ACEF872		EF472 End Piece	1
ACVL032N		Gasket	4H+3W - 120
ACVG31N		Gasket	2H+2W - 1200
ACFT3*N		Gasket	2H+2W - 1200
ACGSL081		Screw	Every 150mm
ACGSL081		Self Tapping Screw	8
ACVL033		Brush Pile	W - 137

See Pages E34 - E39 for lock details

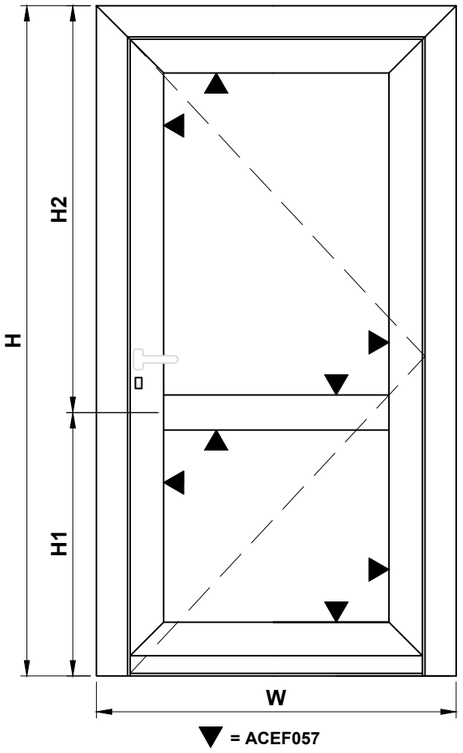

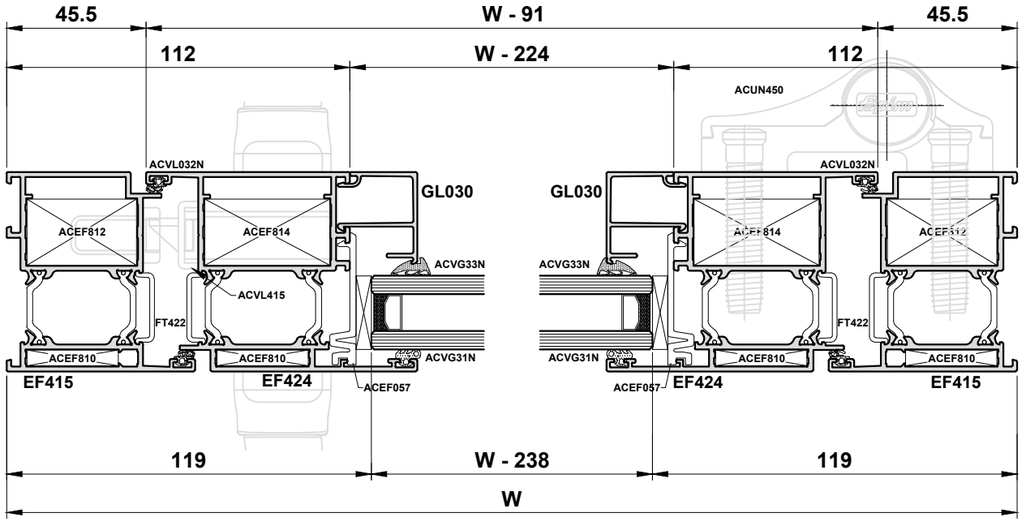

Do Not Scale From This Drawing

Cutting Information: Double Open In Door using EF415 and EF424 with Low Threshold

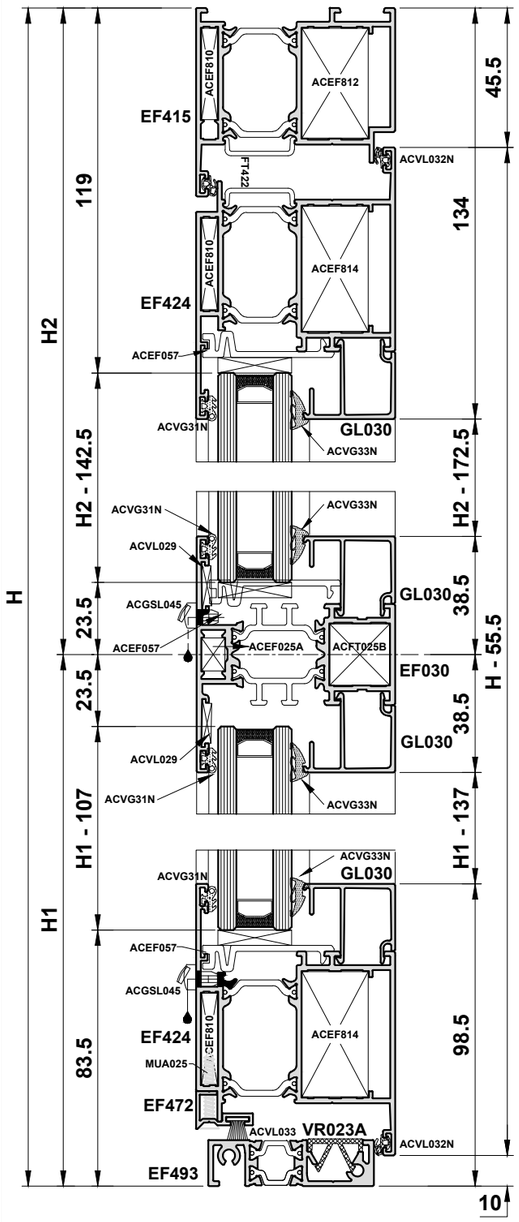

Profiles

EF415		1		H
EF415		1		W
EF415		1		H
EF424		3		H - 55.5
EF424		4		W/2 - 37.5
EF425		1		H - 55.5
EF030		2		W/2 - 170.5
GL*		8		W/2 - 170.5
GL*		2		H1 - 137
GL*		2		H2 - 172.5
EF493		1		W - 101
VR023A		1		W - 101
EF472		1		W/2 - 83.5
EF472		1		W/2 - 65.5
FT422		1		W/2 - 64
FT422		1		W - 84.5
FT422		4		H - 90
FT422		1		B - 84.5
FT422		2		H - 82

Glass Sizes

2 x W/2 - 184.5
H1 - 107/ H2 - 142.5

Accessories

ACEF810		Cleat	10
ACEF812		Cleat	2
ACEF814		Cleat	6
ACEF816		Cleat	2
ACEF025A		Cleat	4
ACFT025B		Cleat	4
ACEF057		Glazing Support	16
ACVL020B		Chevron	8
ACVL029		Strengthening profile	8
ACGSL045		Drainage Cap	4
ACEF694		Threshold end piece	1
ACUN450		Door Hinge	6
ACEF854		Sealing Double Casement	1
ACEF855		Sealing Double Casement	1
ACEF872		EF472 End Piece	2
ACEF891		Bolt Lock	2
ACEF892		Top Keep	1
ACEF894		Bottom Keep	1
ACVL032N		Gasket	6H+3W - 120
ACVG31N		Gasket	4H+4W - 1200
ACFT3*N		Gasket	4H+4W - 1200
ACEF081		Self Tapping Screw	8
ACGSL081		Screw	Every 150mm
ACVL033		Brush Pile	W - 167

See Pages E34 - E39 for lock details

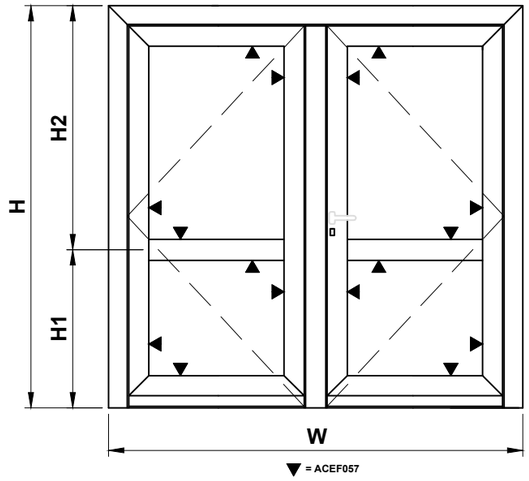

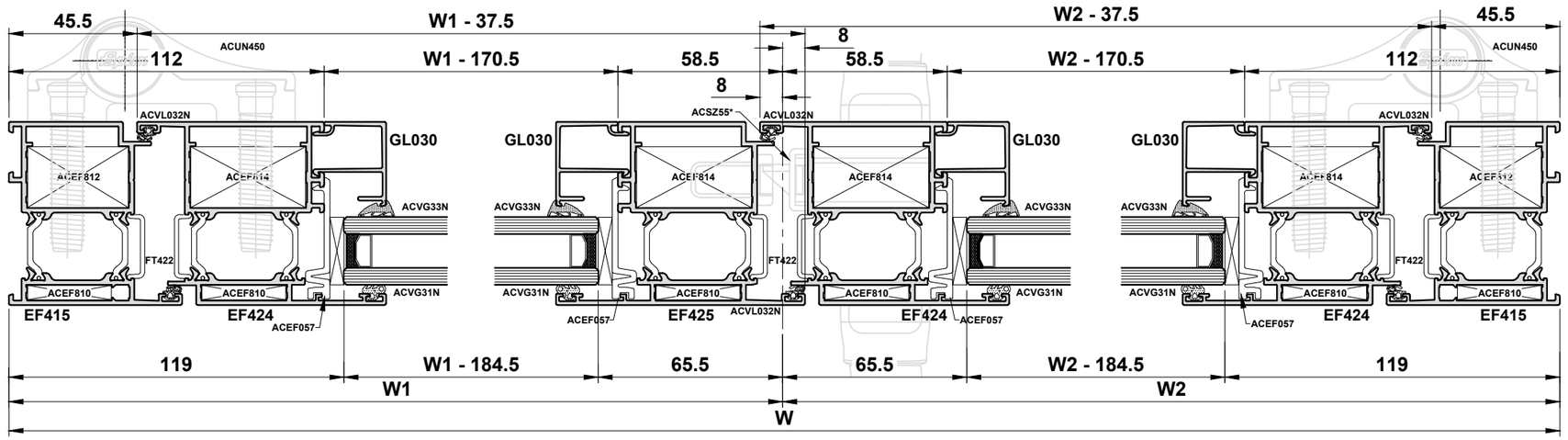

Do Not Scale From This Drawing

Cutting Information: Single Open Out Door using EF414 & EF425 with Low Threshold

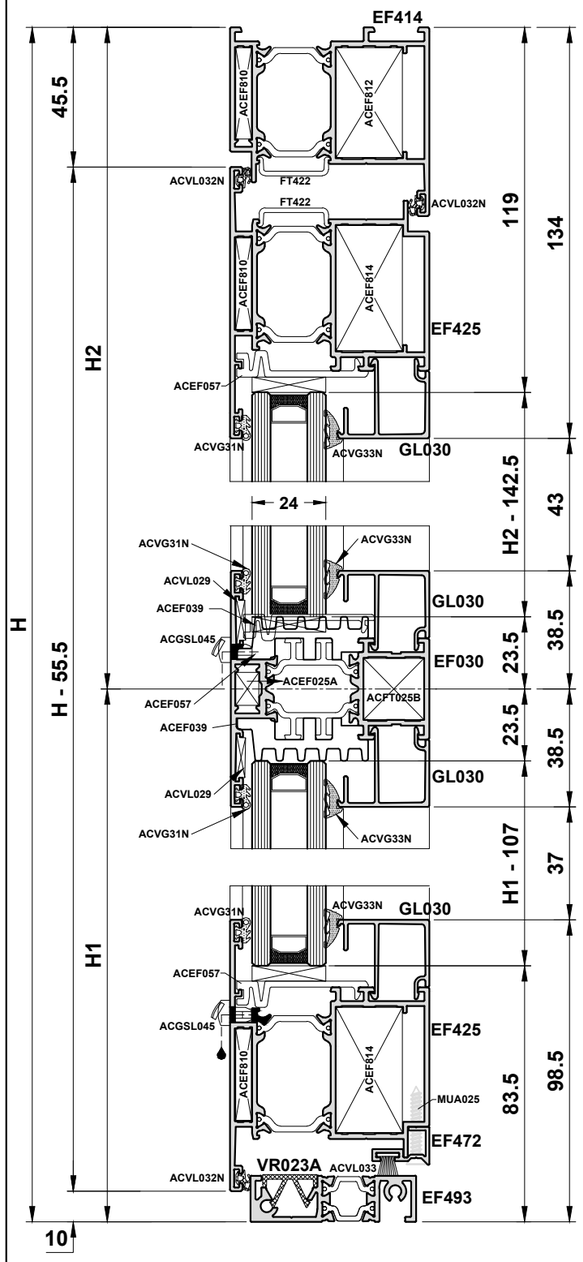

Profiles

EF414		1		H
EF414		1		W
EF414		1		H
EF425		2		H - 55.5
EF425		2		W - 91
EF030		1		W - 224
GL*		4		W - 224
GL*		2		H1 - 137
GL*		2		H2 - 172.5
EF493		1		W - 101
VR023A		1		W - 101
EF472		1		W - 137

FT422		2		W - 118
FT422		2		W - 84.5
FT422		2		H - 90
FT422		2		H - 90
FT422		2		H - 82

Glass Sizes

W - 238
H1 - 107 / H2 - 142.5

Accessories

ACEF810		Cleat	6
ACEF812		Cleat	2
ACEF814		Cleat	4
ACEF025A		Cleat	2
ACFT025B		Cleat	2
ACEF057		Glazing support	8
ACVL020B		Chevron	4
ACVL029		Strengthening piece	4
ACGSL045		Drainage Cap	2
ACEF694		Threshold End Piece	1
ACUN450		Door Hinge	3
ACEF872		End Piece	1
ACEF080		Self Tapping Screw	2
ACEF861		Fixation Plate	2
ACVL032N		Gasket	4H+3W - 120
ACVG31N		Gasket	2H+2W - 1200
ACFT03*N		Gasket	2H+2W - 1200
ACGSL081		Screw	Every 150mm
ACEF081		Self Tapping Screw	8
ACVL033		Brush Pile	B-137

See Pages E34 - E39 for lock details

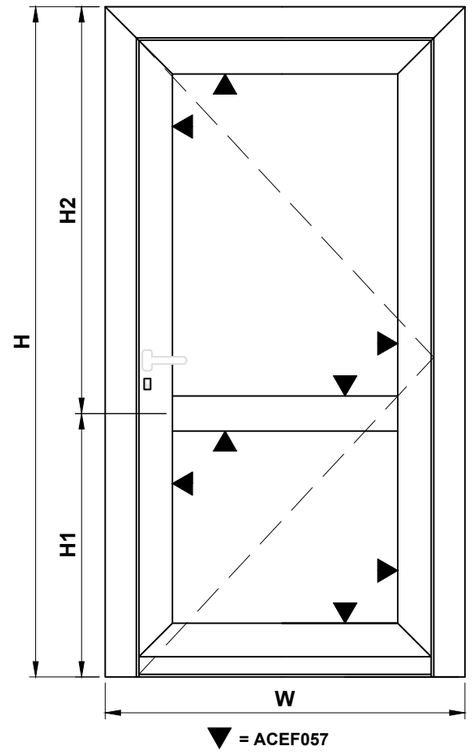

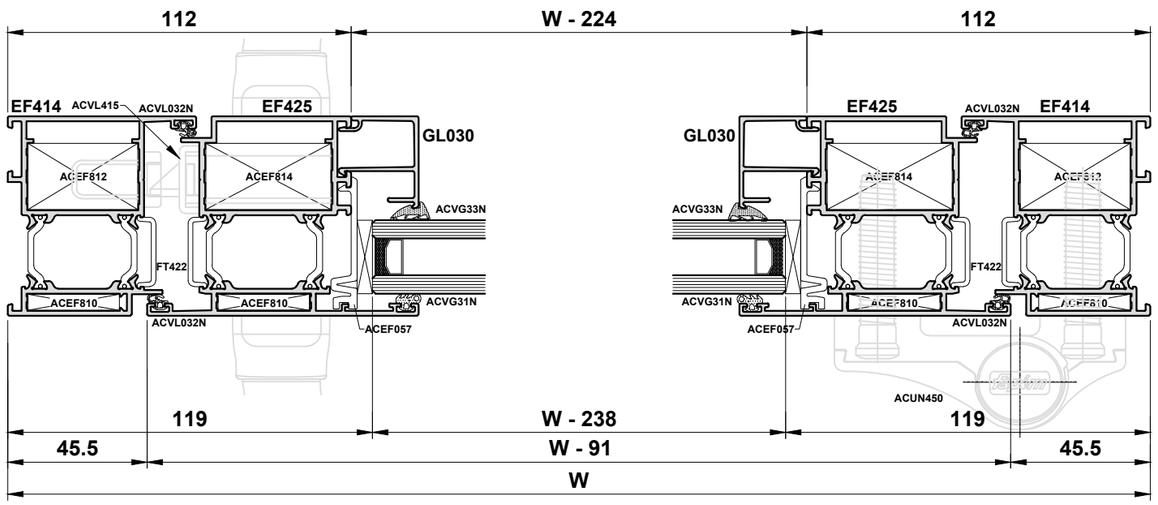

Do Not Scale From This Drawing

Cutting Information: Double Open Out Door using EF414 and EF425 with Low Threshold

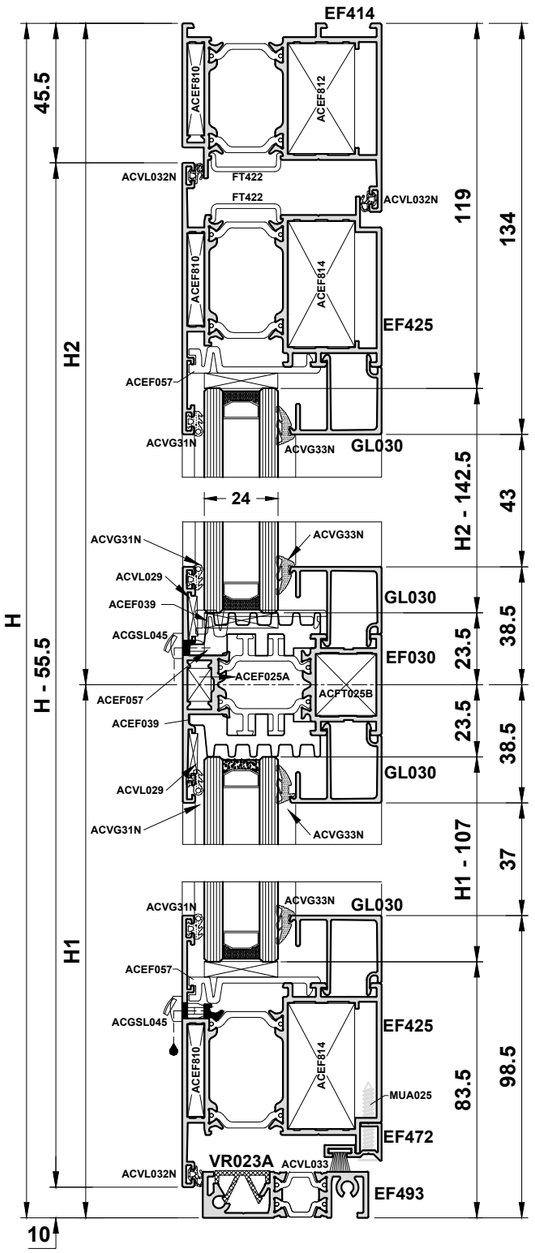

Profiles

EF414		1		H
EF414		1		W
EF414		1		H
EF425		3		H - 55.5
EF425		4		W/2 - 37.5
EF424		1		H - 55.5
EF030		2		W/2 - 170.5
GL*		8		W/2 - 170.5
GL*		4		H1 - 137
GL*		4		H2 - 172.5
EF493		1		W - 101
VR023A		1		W - 101
EF472		1		W/2 - 83.5
EF472		1		W/2 - 62.5
FT422		1		W/2 - 64
FT422		1		W/2 - 64
FT422		4		H - 90
FT422		2		H - 82
FT422		1		W - 84.5

Glass Sizes

2 x W/2 - 184.5
H1 - 107/ H2 - 142.5

Accessories

ACEF810	Cleat	10
ACEF812	Cleat	2
ACEF814	Cleat	6
ACEF816	Cleat	2
ACEF025A	Cleat	4
ACFT025B	Cleat	4
ACEF057	Glazing Support	16
ACVL020B	Chevron	8
ACVL029	Strengthening profile	8
ACGSL045	Drainage Cap	4
ACEF694	Threshold end piece	1
ACUN450	Door Hinge	6
ACEF854	Sealing Double Casement	1
ACEF855	Sealing Double Casement	1
ACEF872	EF472 End Piece	2
ACVL415	Multipoint Lock	1
ACEF861	Fixation Plate	2
ACEF080	Self Tapping Screw	2
ACEF891	Bolt Lock	2
ACEF892	Top Keep	1
ACEF894	Bottom Keep	1
ACVL032N	Gasket	6H+3W - 120

See Pages E34 - E39 for lock details

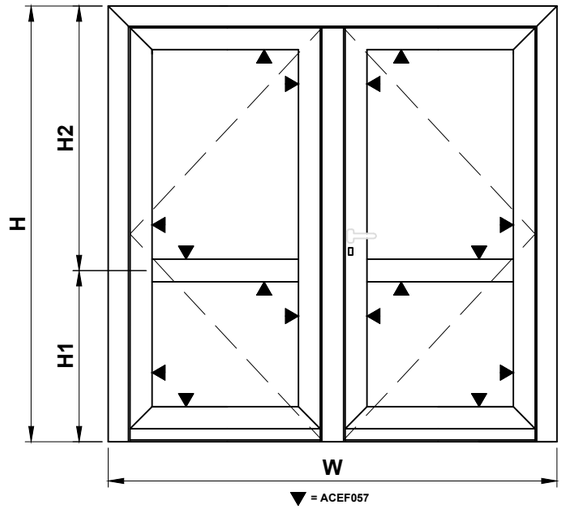

ACFT31N	Gasket	4H+4W - 1200
ACFT3*N	Gasket	4H+4W - 1200
ACEF081	Self Tapping Screw	8
ACGSL081	Screw	Every 150mm
ACVL033	Brush Pile	W - 167

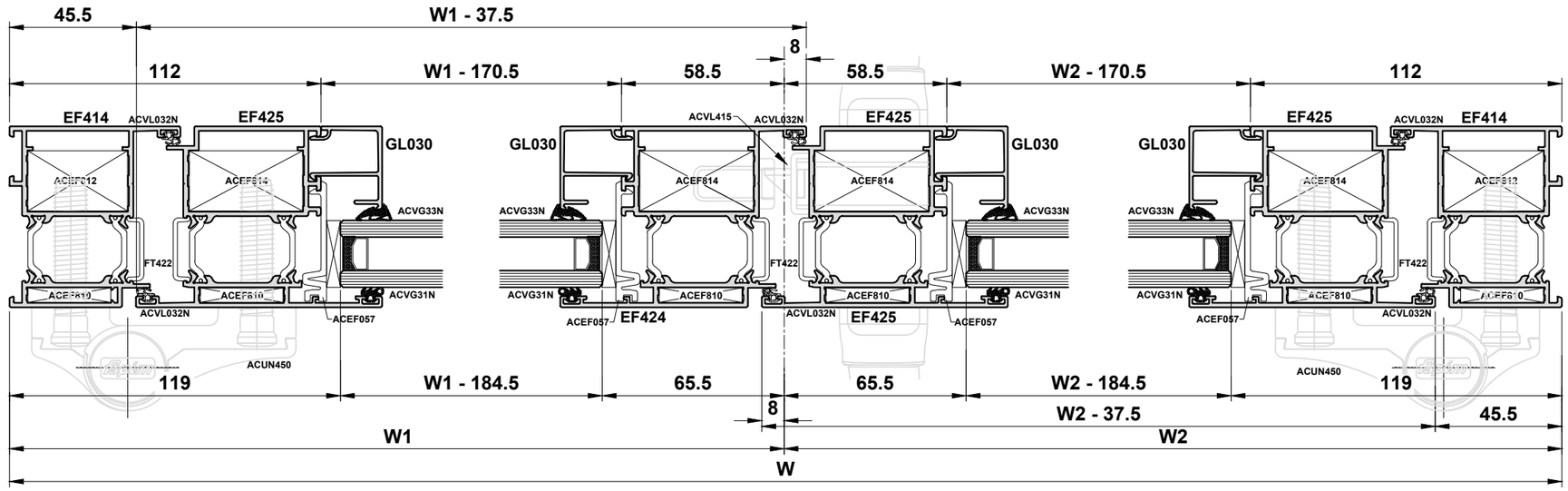

Do Not Scale From This Drawing

This page is intentionally left blank

This page is intentionally left blank