Main Index

IMP Index

Index ..... A01 - A02

Updates A03

A IMP

Profiles

Specification Pages ..... A04 - A08
Technical Information ..... A09 - A18
Scale Profile Drawings ..... A19 - A46

B IMP

Accessories

Photos & Drawings ..... B03 - B31

C IMP

Sections

Screen Section Details ..... C03 - C17
Standard Door Sections Details ..... C18 - C32
Rebated Door Section Details ..... C33 - C52
High Security Door Section Details ..... C53 - C58
Auto Door Section Details ..... C59 - C68

D IMP

Statics ..... D01 - D02

E IMP

Construction Drawings

Screen Assembly ..... E03 - E05
Door Assembly ..... E06 - E08
Lock Preparation ..... E09 - E12
Door Closer Assembly ..... E13 - E16
Rebated Door ..... E17 - E19
Hinge Fixing E20
Glazing Chart ..... E21 - E22
Drainage Tray E23
Panic Bars ..... E24 - E25
Opening Sash Inserts E26
Clear Opening Calculations E27
High Security Details ..... E28 - E37
Example Layout E38

Main Index

F IMP

Sawing Tables

Single Manually Operated Swing Door..... F03
Double Manually Operated Swing Door..... F04
Single Automatic Swing Door..... F05
Double Automatic Swing Door..... F06
Single Automatic Slide Door..... F07
Bi-Parting Automatic Slide Door..... F08
Single Rebated Door..... F09
Double Rebated Door..... F10
Single Rebated Anti-Finger Trap Door..... F11
Double Rebated Anti-Finger Trap Door..... F12
Single Door Autoslide PAS24:2016..... F13
Double Door Autoslide PAS24:2016..... F14

Updates

DATE	PAGE	DESCRIPTION
15/06/17	**A03 - A07**	**Updated PAS24 & Kitemark™ Information**
	A08 - A36	**Added Profiles;** - IMP118, Deep Header bar for Dorma Closer - IMP264, Threshold with Rebate (Open In)
	B03 - B22	**Added Accessories;** - ACIM264, PVC End Cap for IMP264 - ACET232, Threshold Gasket with Upstand - ACET234, Threshold Gasket
06/09/19	**All Sections**	**Added Accessories;** - PAS24 Autoslide kits ACIM271, ACIM272, ACIM280 & ACSZ049 - Fixing and reinforcing components for concealed panic bar ACIM509 & ACIM510 **Added Details;** - PAS24 Single/Double Autoslide Configurations - Concealed Panic bar details for ACIM452 & ACIM453

Specification

GENERAL DESCRIPTION

Smart Wall is a thermally broken shop front screen and door system suitable for all types of ground floor treatment where enhanced thermal performance is required.

Smart Wall is a Kitemarked system (KM 530838) and full details can be found in the Document Library at www.smartsystems.co.uk where an up to date list of the included sections and hardware covered are shown.

In addition to PAS 24:2016, Smart Wall has been successfully tested to LPS 1175 level 2 and BS ENV 1627 level 3 for enhanced security performance making the door one of the best performing fully thermally broken screen & entrance doors available in the UK.

The screen work in this manual concentrates on shuffle glazed sections for 28mm units.

All profiles feature polyamide barriers to maximise thermal performance and can be internally or externally glazed.

Unlike non-thermal alternatives, Smart Wall is available in dual colour from an extensive range of standard and non-standard finishes.

Smart Wall complies with the latest requirements (October 2011) of Document L for thermal transmittance.

Specification

Kitemark™ Certificate
No. KM 530838

Size Limitations and Performance Characteristics

Smart Wall Door System

Door Type	Width (mm) - Maximum	Height (mm) - Maximum	Hinges	Transom/Mullion Length (mm) inc frame - Maximum	Air Permeability classification	Water tightness classification	Resitance to Wind classification	Exposure category as given in Table 1 of BS 6375-1:2009
Rebated Single Leaf	1200	2500	ACIM425B Closure Kit	-	2	7A	A5	2000
Rebated Double Leaf	1200	2500	ACIM425B Closure Kit	-	2	7A	A5	2000
Single Leaf	1200	2500	ACIM425B Closure Kit	-	-	-	A2	800U
Double Leaf	1200	2500	ACIM425B Closure Kit	-	-	-	A2	800U
Slidescreen	3000	2500	-	-	4	9A	A4	1600

⚠ **Important!** ⚠
The size parameters shown against Kitemark are the maximum allowed without the need for further testing.
Please note these are not necessarily the system parameters which may be smaller or larger.
Please refer to fabrication parameters in this manual.

RECOMMENDED DESIGN LIMITATIONS

Manual Centre Pivot Doors:
Maximum Width: 1150mm
Minimum Width: 400mm
Maximum Height: 2500mm
Maximum Weight: 80kg

Manual Hinged Doors:
Maximum Width: 1100mm
Minimum Width: 400mm
Maximum Height: 2500mm
Maximum Weight: 100kg (with 3 hinges)
Note: See page C30 for more information on limitations

Auto Doors:
See supplier of auto mechanism for design limitations.

Screens:
All screen work must meet the requirements of the site location. If there is any doubt regarding suitability, please contact our technical department Tel: 01934 876100

Specification

PROFILE SPECIFICATION

The system is constructed of aluminium alloy extrusion to BS EN 755-9 and BS EN 12020, extruded from 6060 T6 alloy. The internal and external extrusions are separated with a polyamide thermal break.

The aluminium alloy extrusion is pre-treated and finished either:-

a) Anodised to BS 3987: 1987, grade AA25 to a natural self colour.

b) Polyester powder organic coating to BS 6496. Dual colour is available.

GENERAL MANUFACTURING

Screens & doors are made by cutting the frame profiles with accurate 90° square ends using Tungsten Carbide Tipped Saw Blades, operating at approximately 3000 rpm. Cut ends shall be degreased prior to fabrication.

The doors are joined using aluminium cleats in the stiles which are secured in position by tightening a grub screw until it punches through the aluminium. The rails are then pre-drilled using a drill jig and positioned over the cleat and tightened using the fixing supplied. ACSIL013 cleat glue provides additional strength for larger doors.

For screens, the ends of transoms and mullions are square cut and fixed using self-tapping screws. ACSIL04 small gap sealant must be used on all joints prior to assembly.

On polyester powder coated finishes, great care should be taken to avoid getting gap sealer on visible surfaces and should be removed as soon as possible with a clean cloth.

Care should be exercised when using products not supplied by Smart Systems Ltd as no responsibility can be accepted.

Specification

DRAINAGE

As with all dry glazed systems, it is recommended that the system is adequately drained and ventilated. Refer to drainage details in manual, if in doubt ask The Technical Department.

In order to get maximum performance and weather resistance it is recommended that drips are used above doors & on the bottom rail above the threshold.

SCREEN MANUFACTURING INFORMATION

The screen members are cut with 90° ends to the overall size required.

The mullions should be marked in pairs to ensure accurate alignment for the head, cill & transom sections.

Using the marked centre line, drill the transom/mullion fixing holes using a 5.5mm dia. drill bit.

Prior to fixing of transoms to mullions, a suitable gap sealer may be used on the ends. After fixing, special care should be taken to ensure any excess is cleared from painted surfaces.

DOORS

The door section are cut with 90° ends to the overall size required.

The doors are joined using aluminium cleats in the stiles which are secured in position by tightening a grub screw until it punches through the aluminium. The rails are then pre-drilled using a drill jig and positioned over the cleat and tightened using the fixing supplied. ACSIL013 cleat glue provides additional strength for larger doors.

IMP032 mid rail is fixed into position using two brackets per join which require self tapping screws to hold in position.

DOOR FITTINGS

Smart Wall offers a wide range of door fittings to suit most applications. If your particular requirements are not shown in this manual, please contact our technical department for more information.

GLAZING

All beads are cut to suit the glazing aperture on the fully assembled Screen or door for glazing either at factory or on site as required.

Doors are intended to be internally glazed. Screens are shown in this manual as externally glazed, but may be reversed if necessary, providing drainage is considered.

Specification

Smart Wall U Values

Please refer to the Smart Systems' Document L White Paper or contact the Technical Department.

For advise on window sizes outside of the recommended design limitations, please contact the Technical Department at Smart Systems Ltd Tel: 01934 876100

Number	Picture	Page	Perim. mm	Mec. mm	Ix(cm4) wx(cm3)	Iy(cm4) wy(cm3)	Length	Pack pr.	MF	SA	KL	HP	M
EUD03	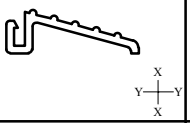	A37	113	39	- ----- -	- ----- -	6.5	1	✓	✓			
IMP011	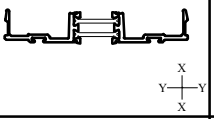	A27	340	72	26.5 ----- 5.5	0.7 ----- 1.2	6.5	1	✓	✓	✓	✓	✓
IMP013	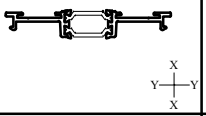	A25	312	23	25.6 ----- 5.3	0.4 ----- 0.7	6.5	1	✓	✓	✓	✓	✓
IMP014	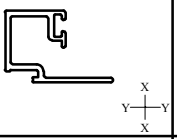	A25	152	34	- ----- -	- ----- -	6.5	1	✓	✓	✓	✓	
IMP015	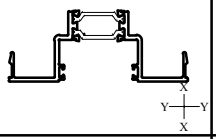	A27	424	47	31.18 ----- 6.43	6.15 ----- 4.19	6.5	1	✓	✓	✓	✓	✓
IMP016	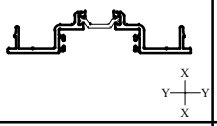	A19	169	56	27.69 ----- 5.71	1.39 ----- 1.80	6.5	1	✓	✓	✓	✓	✓
IMP019	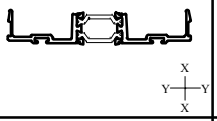	A27	340	72	26.5 ----- 5.5	0.7 ----- 1.2	6.5	1	✓	✓	✓	✓	✓
IMP025	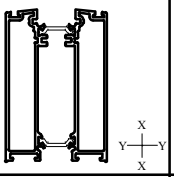	A32	648	123	61.85 ----- 18.46	137.47 ----- 28.29	6.5	1	✓	✓	✓	✓	✓
IMP026	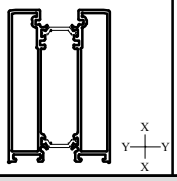	A32	610	123	60.88 ----- 18.17	133.58 ----- 26.92	6.5	1	✓	✓	✓	✓	✓

A = Outside
B = Inside

MF = Mill Finish
SA = Silver Anodised
KL = Basic Colour
HP = Special Colour
M = Dual Colour

Number	Picture	Page	Perim. mm	Mec. mm	Ix(cm4) wx(cm3)	Iy(cm4) wy(cm3)	Length	Pack pr.	MF	SA	KL	HP	M
IMP027	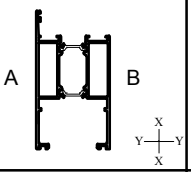	A33	712	228	60.8 ----- 17.8	90.6 ----- 15.1	6.5	1	✓	✓	✓	✓	✓
IMP028	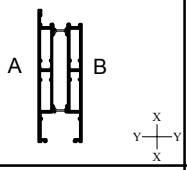	A35	1013	383	102.38 ----- 49.59	495.54 ----- 49.59	6.5	1	✓	✓	✓	✓	✓
IMP030	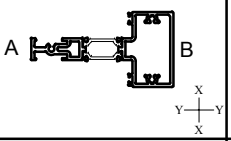	A21	413	135	72.5 ----- 11.9	16.3 ----- 6.2	6.5	1	✓	✓	✓	✓	✓
IMP032	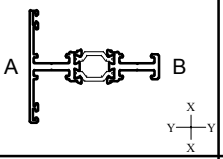	A37	384	78	21.5 ----- 5.61	4.21 ----- 1.49	6.5	1	✓	✓	✓	✓	✓
IMP034	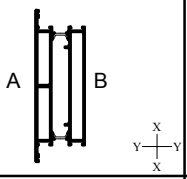	A36	953	368	91.8 ----- 26.25	441.0 ----- 44.1	5	1	✓	✓	✓	✓	✓
IMP035	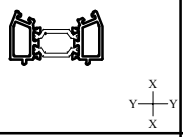	A28	226	58	9.2 ----- 1.8	3.76 ----- 1.31	6.5	1	✓	✓	✓	✓	✓
IMP036N	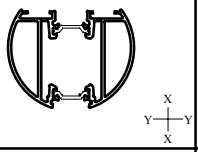	A28	424	161	50.9 ----- 12.3	32.9 ----- 10.9	6.5	1	✓	✓	✓	✓	✓
IMP037N	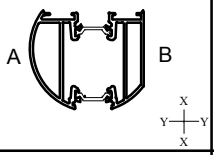	A28	421	154	45.0 ----- 12.2	32.1 ----- 10.6	6.5	1	✓	✓	✓	✓	✓
IMP038	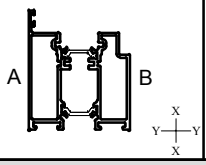	A29	525	159	44.5 ----- 12.7	39.4 ----- 11.3	6.5	1	✓	✓	✓	✓	✓

A = Outside
B = Inside

MF = Mill Finish
SA = Silver Anodised
KL = Basic Colour
HP = Special Colour
M = Dual Colour

Number	Picture	Page	Perim. mm	Mec. mm	Ix(cm4) wx(cm3)	Iy(cm4) wy(cm3)	Length	Pack pr.	MF	SA	KL	HP	M
IMP039	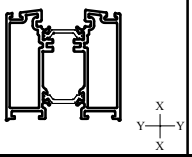	A29	504	134	43.5 ----- 13.0	35.9 ----- 11.5	6.5	1	✓	✓	✓	✓	✓
IMP040	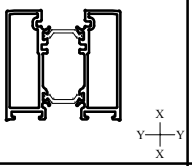	A29	466	172	42.5 ----- 12.7	35.1 ----- 11.1	6.5	1	✓	✓	✓	✓	✓
IMP041	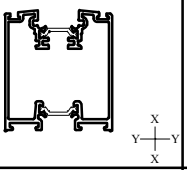	A29	765	217	47.16 ----- 14.08	55.14 ----- 15.27	6.5	1	✓	✓	✓	✓	✓
IMP042	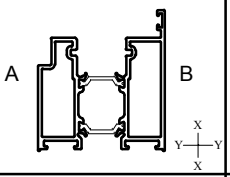	A31	408	169	41.95 ----- 11.92	31.15 ----- 9.95	6.5	1	✓	✓	✓	✓	✓
IMP043	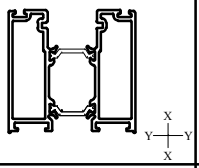	A31	400	206	43.73 ----- 13.05	35.2 ----- 11.11	6.5	1	✓	✓	✓	✓	✓
IMP056	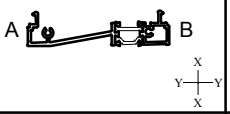	A21	385	28	53.67 ----- 10.67	1.47 ----- 1.79	6.5	1	✓	✓	✓	✓	✓
IMP057	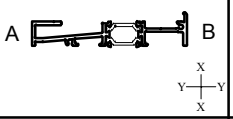	A22	408	30	47.85 ----- 9.01	0.97 ----- 1.06	6.5	1	✓	✓	✓	✓	✓
IMP058	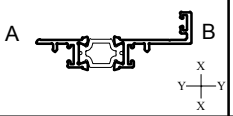	A22	224	87	5.35 ----- 0.40	1.69 ----- 0.42	6.5	1	✓	✓	✓	✓	✓
IMP110	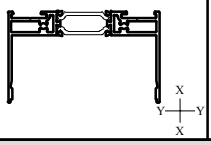	A26	458	129	98.1 ----- 19.76	16.12 ----- 9.26	6.5	1	✓	✓	✓	✓	✓

A = Outside
B = Inside

MF = Mill Finish
SA = Silver Anodised
KL = Basic Colour
HP = Special Colour
M = Dual Colour

Number	Picture	Page	Perim. mm	Mec. mm	Ix(cm4) wx(cm3)	Iy(cm4) wy(cm3)	Length	Pack pr.	MF	SA	KL	HP	M
IMP111	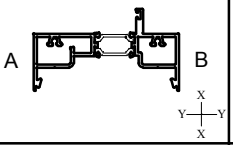	A38	406	166	91.26 ----- 27.16	10.5 ----- 4.84	6.5	1	✓	✓	✓	✓	✓
IMP114	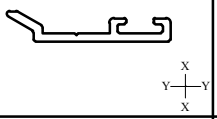	A30	74	52	- ----- -	- ----- -	6.5	1	✓	✓	✓	✓	
IMP115	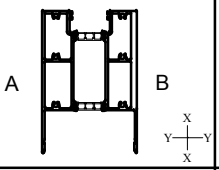	A39	820	362	322.06 ----- 35.68	307.80 ----- 73.06	4.2	1	✓	✓	✓	✓	✓
IMP118	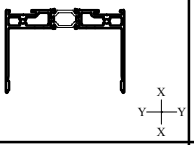	A26	543	144	111.01 ----- 22.2	26.46 ----- 13.5	6.5	1	✓	✓	✓	✓	✓
IMP120	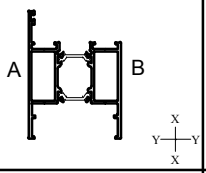	A33	522	165	44.2 ----- 12.8	30.9 ----- 7.3	6.5	1	✓	✓	✓	✓	✓
IMP121	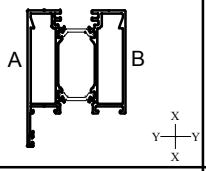	A34	538	207	46.01 ----- 13.41	50.55 ----- 14.37	6.5	1	✓	✓	✓	✓	✓
IMP122	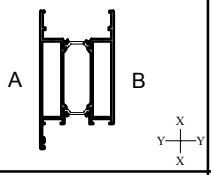	A34	650	234	58.88 ----- 17.28	91.43 ----- 15.66	6.5	1	✓	✓	✓	✓	✓
IMP210	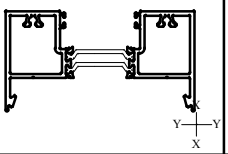	A19	435	174	109.04 ----- 21.81	18.43 ----- 8.75	6.5	1	✓	✓	✓	✓	✓
IMP215	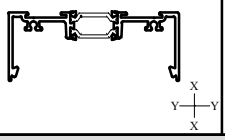	A25	495	106	75.5 ----- 15.1	6.5 ----- 5.3	6.5	1	✓	✓	✓	✓	✓

A = Outside
B = Inside

MF = Mill Finish
SA = Silver Anodised
KL = Basic Colour
HP = Special Colour
M = Dual Colour

Number	Picture	Page	Perim. mm	Mec. mm	Ix(cm4) wx(cm3)	Iy(cm4) wy(cm3)	Length	Pack pr.	MF	SA	KL	HP	M
IMP216	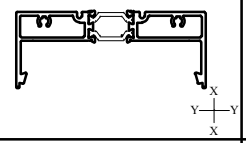	A43	389	169	82.64 ----- 16.53	7.19 ----- 5.70	6.5	1	✓	✓	✓	✓	✓
IMP217	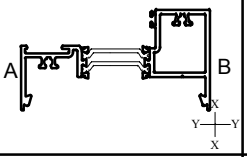	A21	453	123	85.03 ----- 14.67	12.29 ----- 5.04	6.5	1	✓	✓	✓	✓	✓
IMP219	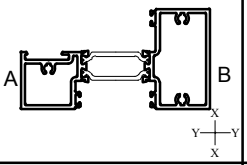	A22	409	181	90.12 ----- 16.3	20.49 ----- 9.35	6.5	1	✓	✓	✓	✓	✓
IMP250	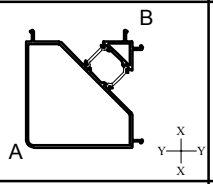	A23	598	198	154.8 ----- 27.5	154.8 ----- 28.5	6.5	1	✓	✓	✓	✓	✓
IMP255	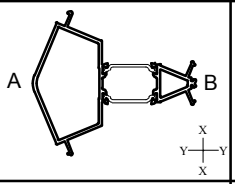	A24	448	92	86.13 ----- 14.26	35.91 ----- 7.54	6.5	1	✓	✓	✓	✓	✓
IMP260	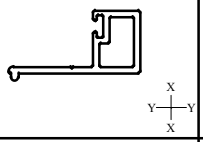	A43	115	29	- ----- -	- ----- -	6.5	1	✓	✓	✓	✓	
IMP261	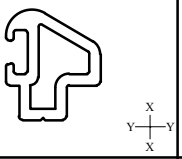	A43	58	22	- ----- -	- ----- -	6.5	1	✓	✓	✓	✓	
IMP262	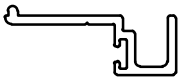	A43	123	68	- ----- -	- ----- -	6.5	1	✓	✓	✓	✓	
IMP263	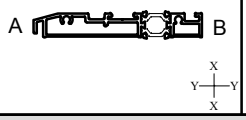	A44	338	158	52.88 ----- 9.77	1.29 ----- 1.57	6.5	1		✓			

A = Outside
B = Inside

MF = Mill Finish
SA = Silver Anodised
KL = Basic Colour
HP = Special Colour
M = Dual Colour

Smart Wall

PROFILES : TECHNICAL INFORMATION

Number	Picture	Page	Perim. mm	Mec. mm	Ix(cm4) wx(cm3)	Iy(cm4) wy(cm3)	Length	Pack pr.	MF	SA	KL	HP	M
IMP264	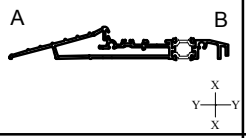	A44	491	103	149.1 ----- 16.2	2.56 ----- 2.67	6.5	1		✓			
IMP265	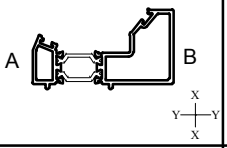	A45	304	83	75.5 ----- 15.1	6.5 ----- 5.3	6.5	1	✓	✓	✓	✓	✓
IMP266	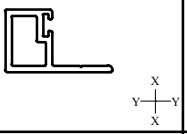	A43	98.6	40.7	- ----- -	- ----- -	6.5	1	✓	✓	✓	✓	
IMP269	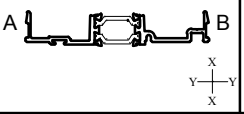	A45	340	101	27.49 ----- 5.57	0.66 ----- 1.02	6.5	1	✓	✓	✓	✓	✓
IMP300	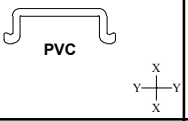	A30	-	-	- ----- -	- ----- -	6.5	1	✓				
IMP301	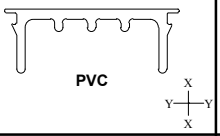	A19	-	-	- ----- -	- ----- -	6.5	1	✓				
IMP310	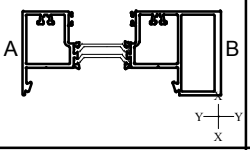	A20	484	218	216.5 ----- 37.4	30.3 ----- 19.4	6.5	1	✓	✓	✓	✓	✓
IMP410	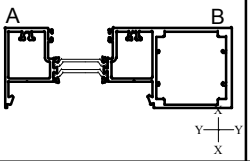	A20	534	268	341.4 ----- 58.9	42.0 ----- 26.9	6.5	1	✓	✓	✓	✓	✓
IMP411	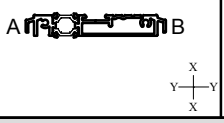	A37	354	129	46.19 ----- 9.31	1.18 ----- 1.54	6.5	1	✓	✓			

A = Outside
B = Inside

MF = Mill Finish
SA = Silver Anodised
KL = Basic Colour
HP = Special Colour
M = Dual Colour

Number	Picture	Page	Perim. mm	Mec. mm	Ix(cm4) wx(cm3)	Iy(cm4) wy(cm3)	Length	Pack pr.	MF	SA	KL	HP	M
IMP412	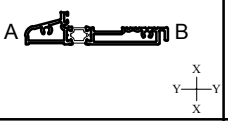	A38	302	122	44.79 ----- 8.80	1.31 ----- 1.81	6.5	1		✓			
IMP414	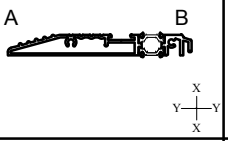	A37	359	161	83.83 ----- 8.8	1.5 ----- 1.83	6.5	1		✓			
IMP415	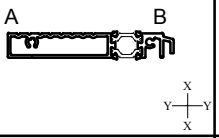	A39	282	160	45.23 ----- 8.96	1.3 ----- 1.74	6.5	1		✓			
IMP613	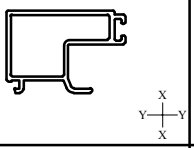	A40	135	53	- ----- -	- ----- -	6.5	1	✓	✓	✓	✓	
IMP614	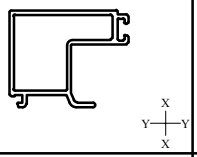	A40	142	58	- ----- -	- ----- -	6.5	1	✓	✓	✓	✓	
IMP615	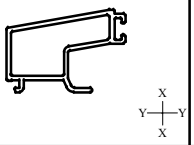	A40	128	47	- ----- -	- ----- -	6.5	1	✓	✓	✓	✓	
IMP616	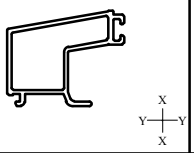	A40	136	51	- ----- -	- ----- -	6.5	1	✓	✓	✓	✓	
IMP620	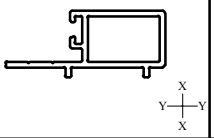	A27	111	32	- ----- -	- ----- -	6.5	1	✓	✓	✓	✓	
IMP622	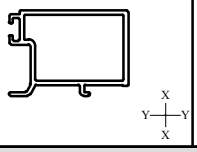	A25	134	53	- ----- -	- ----- -	6.5	1	✓	✓	✓	✓	

A = Outside
B = Inside

MF = Mill Finish
SA = Silver Anodised
KL = Basic Colour
HP = Special Colour
M = Dual Colour

Number	Picture	Page	Perim. mm	Mec. mm	Ix(cm4) wx(cm3)	Iy(cm4) wy(cm3)	Length	Pack pr.	MF	SA	KL	HP	M
IMP623	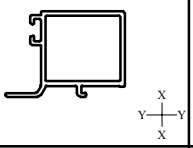	A25	127	51	- ----- -	- ----- -	6.5	1	✓	✓	✓	✓	
GL004	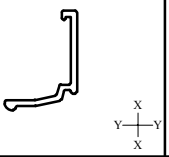	A41	92	29	- ----- -	- ----- -	6.5	1	✓	✓	✓	✓	
GL008	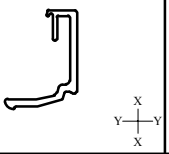	A41	109	30	- ----- -	- ----- -	6.5	1	✓	✓	✓	✓	
GL014	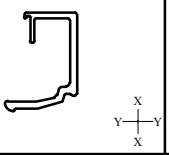	A41	121	36	- ----- -	- ----- -	6.5	1	✓	✓	✓	✓	
GL020	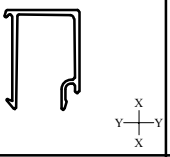	A41	153	44	- ----- -	- ----- -	6.5	1	✓	✓	✓	✓	
GL023	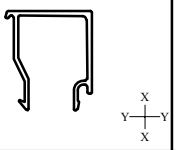	A41	160	48	- ----- -	- ----- -	6.5	1	✓	✓	✓	✓	
GL030	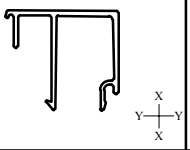	A41	188	52	- ----- -	- ----- -	6.5	1	✓	✓	✓	✓	
GL1212	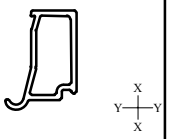	A41	88	36	- ----- -	- ----- -	6.5	1	✓	✓	✓	✓	
GL1216	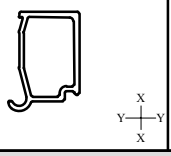	A41	92	39	- ----- -	- ----- -	6.5	1	✓	✓	✓	✓	

A = Outside
B = Inside

MF = Mill Finish
SA = Silver Anodised
KL = Basic Colour
HP = Special Colour
M = Dual Colour

Number	Picture	Page	Perim. mm	Mec. mm	Ix(cm4) wx(cm3)	Iy(cm4) wy(cm3)	Length	Pack pr.	MF	SA	KL	HP	M
GL526	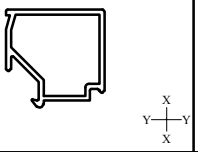	A41	111	48	- ----- -	- ----- -	6.5	1	✓	✓	✓	✓	
PCX40	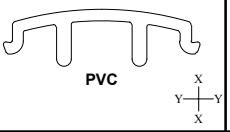	A28	85	25	- ----- -	- ----- -	6.5	1	✓				
PCX46	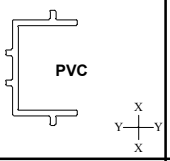	A30	98	17	- ----- -	- ----- -	6.5	1	✓				
UTL032	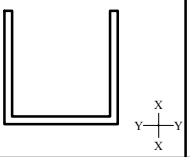	A42	176	176	- ----- -	- ----- -	6	1	✓	✓	✓	✓	
UTL072	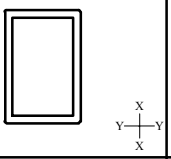	A42	100	100	- ----- -	- ----- -	6	1	✓	✓	✓	✓	
UTL076	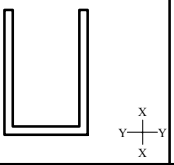	A42	156	156	- ----- -	- ----- -	6	1	✓	✓	✓	✓	
UTL039	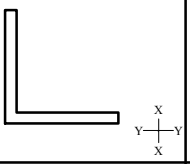	A42	60	60	- ----- -	- ----- -	6	1	✓	✓	✓	✓	
VG12	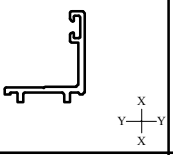	A40	110	29	- ----- -	- ----- -	6.5	1	✓	✓	✓	✓	
VL72	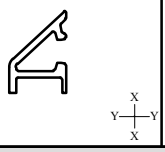	A40	101	54	- ----- -	- ----- -	6.5	1	✓	✓	✓	✓	

A = Outside
B = Inside

MF = Mill Finish
SA = Silver Anodised
KL = Basic Colour
HP = Special Colour
M = Dual Colour

Smart Wall

PROFILES : TECHNICAL INFORMATION

Number	Picture	Page	Perim. mm	Mec. mm	Ix(cm4) wx(cm3)	Iy(cm4) wy(cm3)	Length	Pack pr.	MF	SA	KL	HP	M
UN3040	A B	A45	580	351.1	535.26 ----- 49.24	10.98 ----- 5.81	6.5	1	✓	✓	✓	✓	✓
	X Y Y X												

A = Outside
B = Inside

MF = Mill Finish
SA = Silver Anodised
KL = Basic Colour
HP = Special Colour
M = Dual Colour

Primary Visible Side - - - - - - - - - - - - - - - - - - Secondary Visible Side — · — · — · — · — · — · — · —

IMP210

Shuffle Glazed Jamb

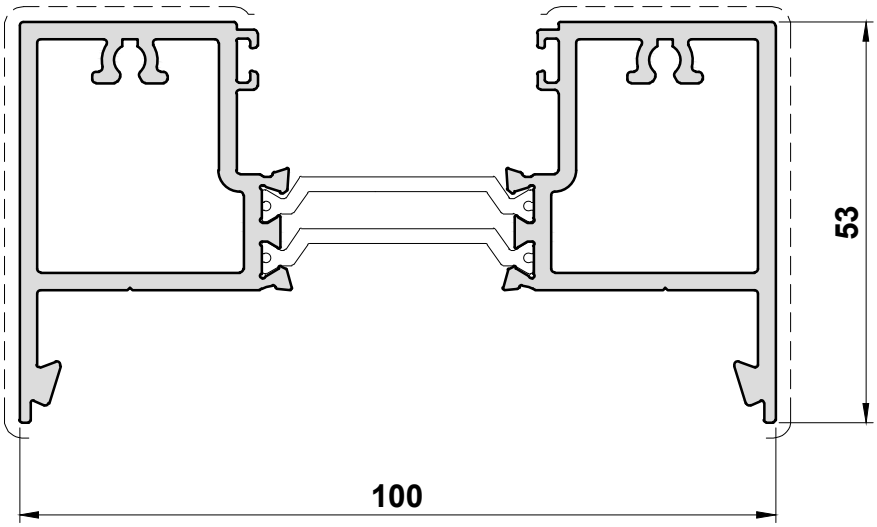

IMP016

Shallow Pocket Closure

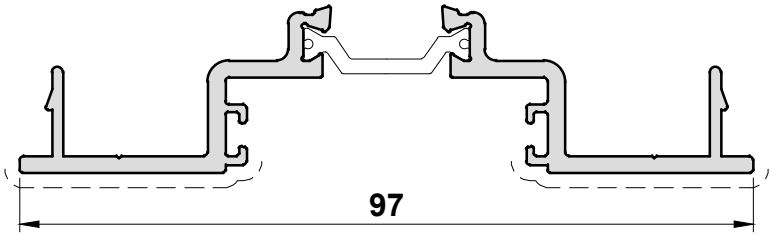

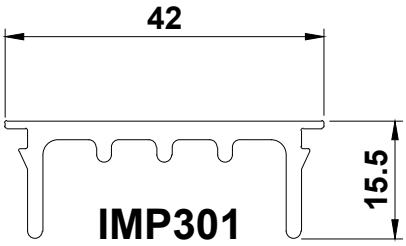

IMP301

Infill Strip
PVC

Scale 1:1

Primary Visible Side - - - - - - - - - - - - - - - - - - Secondary Visible Side — · — · — · — · — · — · —

IMP310

125mm Pocket Glazing Mullion

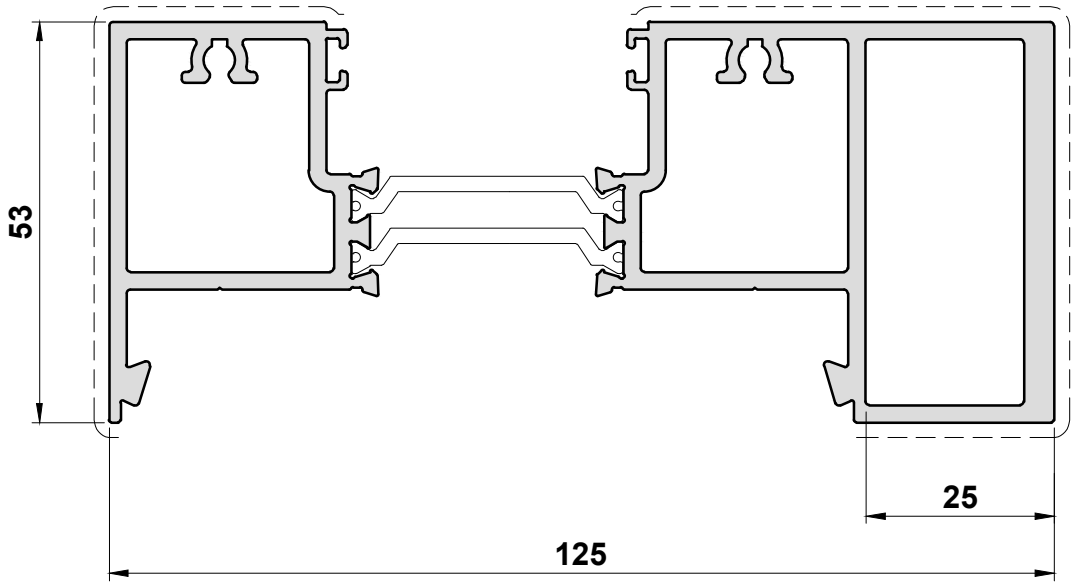

IMP410

150mm Pocket Glazing Mullion

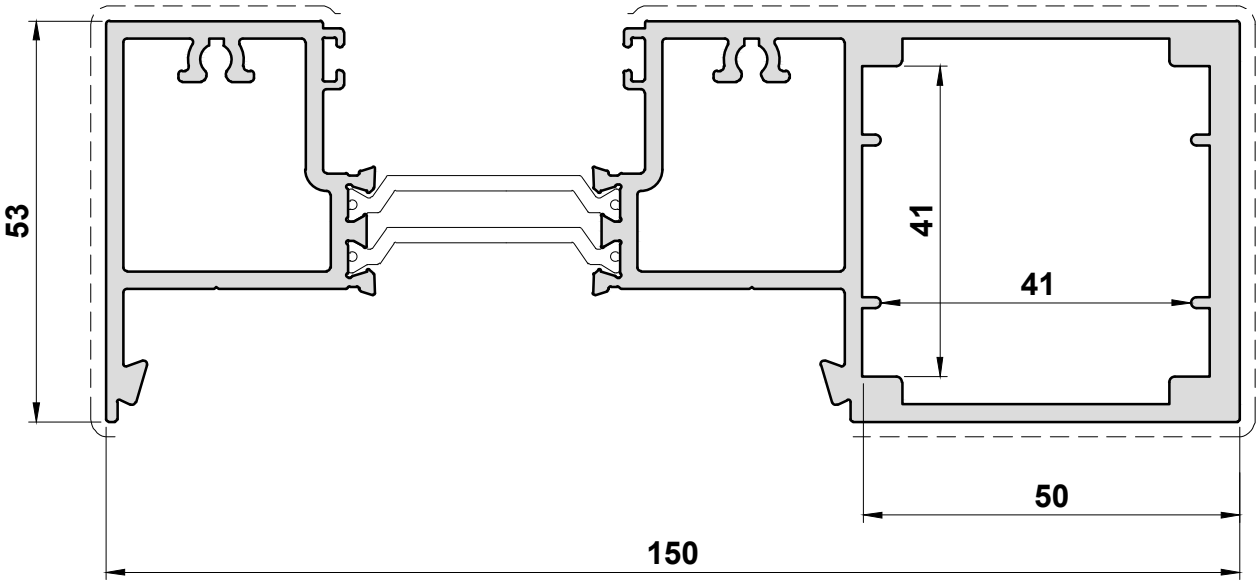

Scale 1:1

Primary Visible Side - - - - - - - - - - - - - - - - - - Secondary Visible Side — · — · — · — · — · — · — · —

IMP030
Beaded Screen Transom

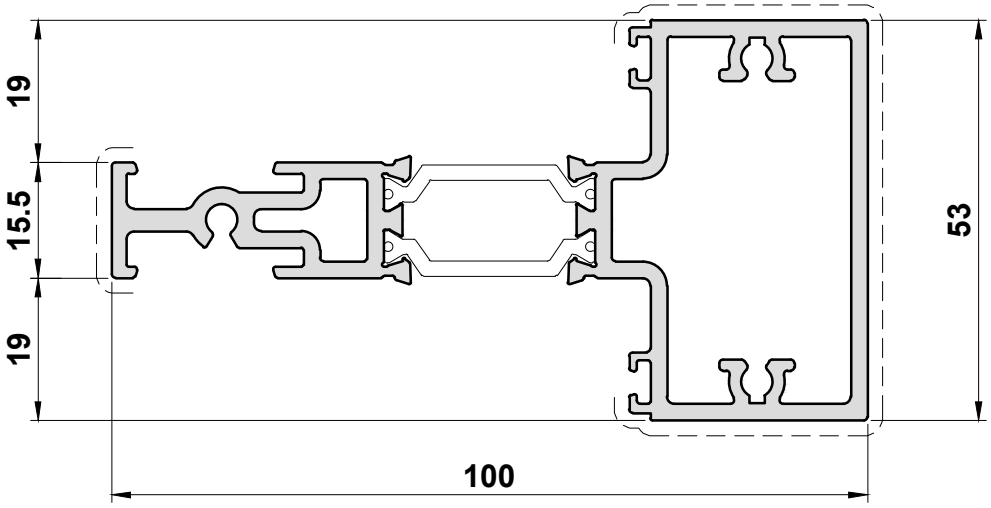

IMP217
Bead/Pocket Glazed Transom

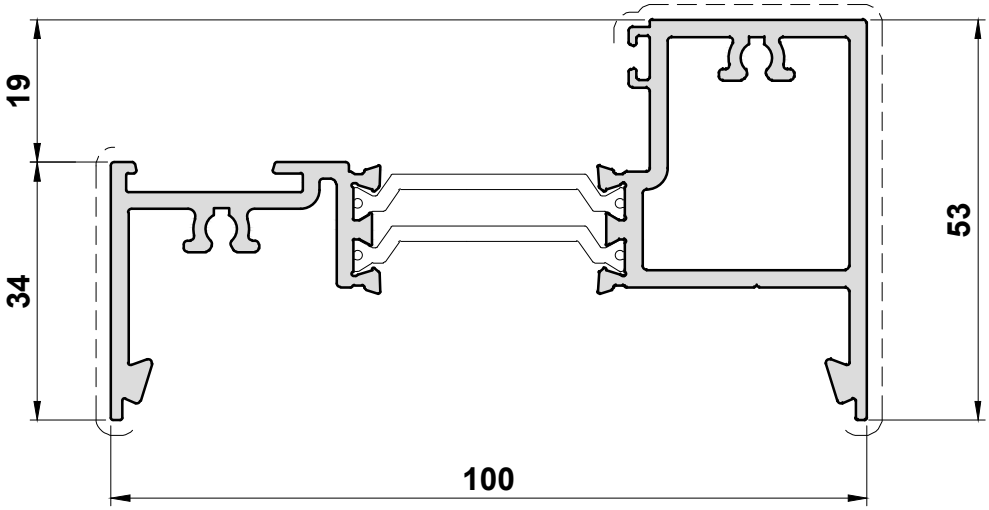

IMP056
Drainage Sub-Cill

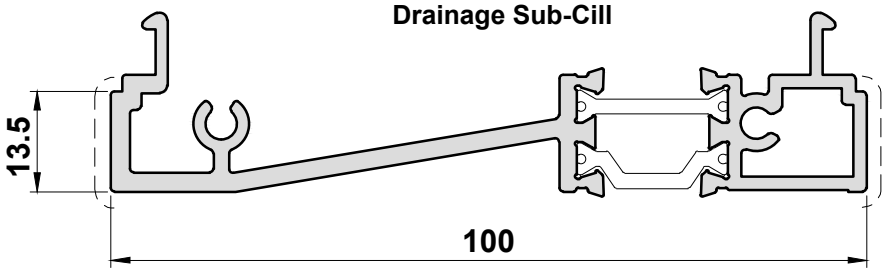

Scale 1:1

Primary Visible Side - - - - - - - - - - - - - - - - - - Secondary Visible Side — · — · — · — · — · — · — · —

IMP219
Bead/Pocket Glazed Transom

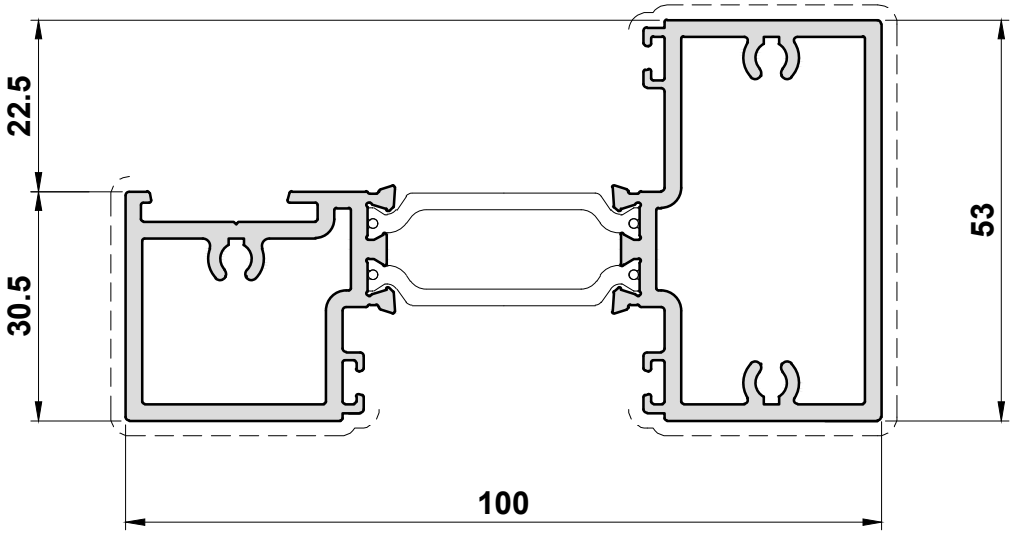

IMP057
Flush Sub-Cill
(end cap = ACIM157)

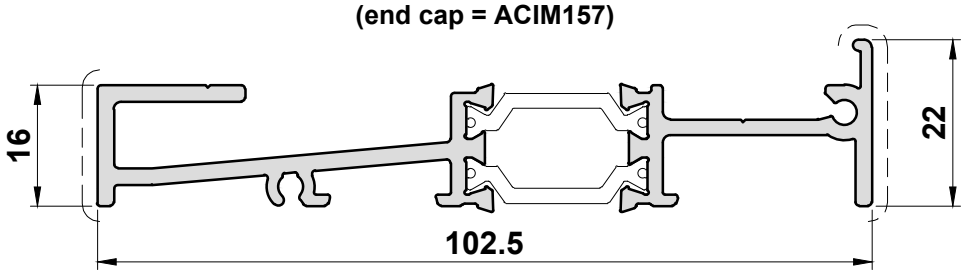

IMP058
Rebate

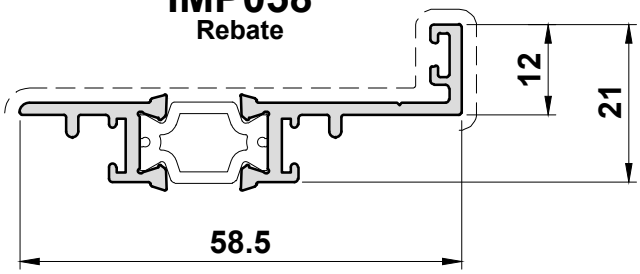

Scale 1:1

Primary Visible Side - - - - - - - - - - - - - - - - - - Secondary Visible Side — · — · — · — · — · — · — · —

IMP250
Corner Post

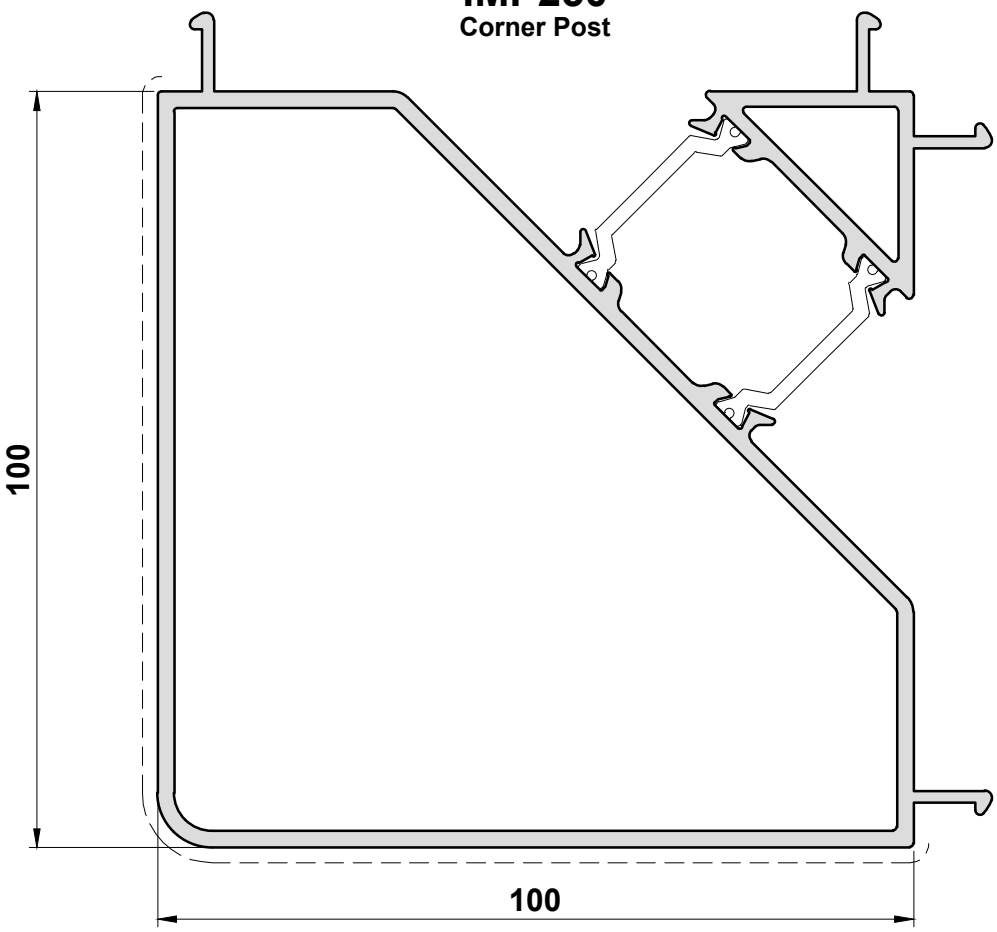

Scale 1:1

Primary Visible Side - - - - - - - - - - - - - - - - - - Secondary Visible Side — · · — · · — · · — · · — · · — · · —

IMP255

135° Corner Post

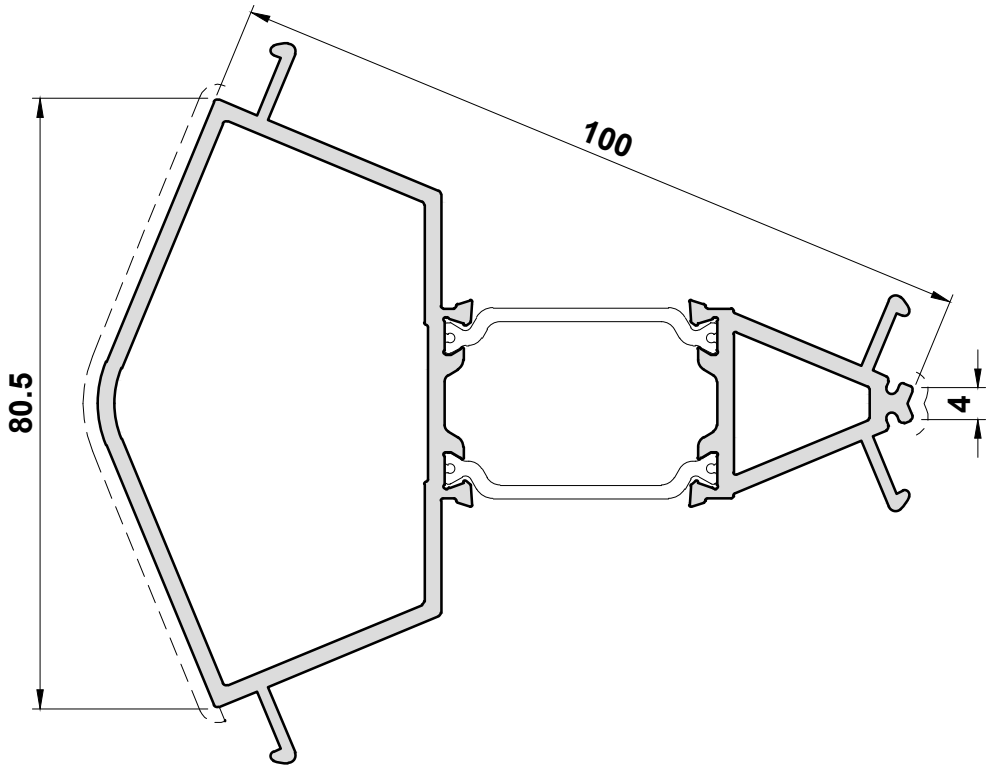

Scale 1:1

Primary Visible Side - - - - - - - - - - - - - - - - - - Secondary Visible Side — · — · — · — · — · — · — · —

IMP014
Screw on Rebated Leg

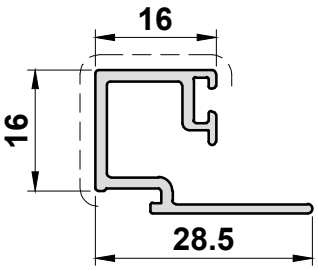

IMP622
28mm Bead for IMP215

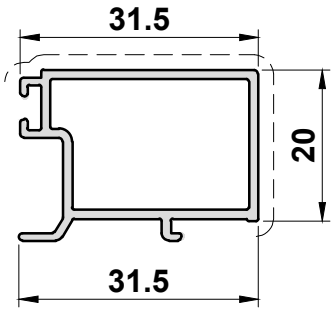

IMP623
42mm Glazing Bead for IMP215 & IMP213

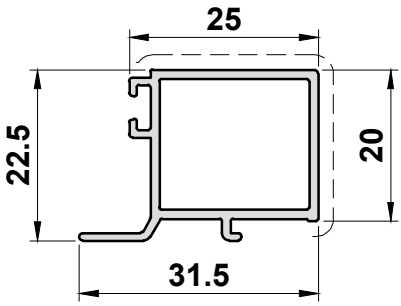

IMP215
Open Back Double Beaded Mullion

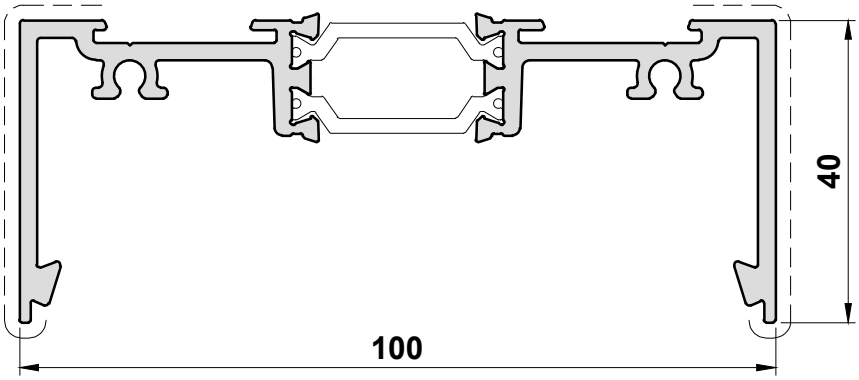

IMP013
Double Beaded Pocket Closure

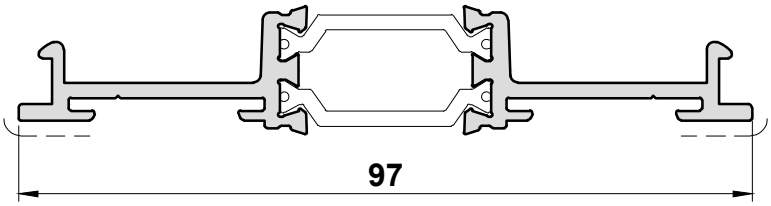

Scale 1:1

Primary Visible Side - - - - - - - - - - - - - - - - - - Secondary Visible Side — · · — · · — · · — · · — · · — · · —

IMP110

Overhead Transom with Screwports

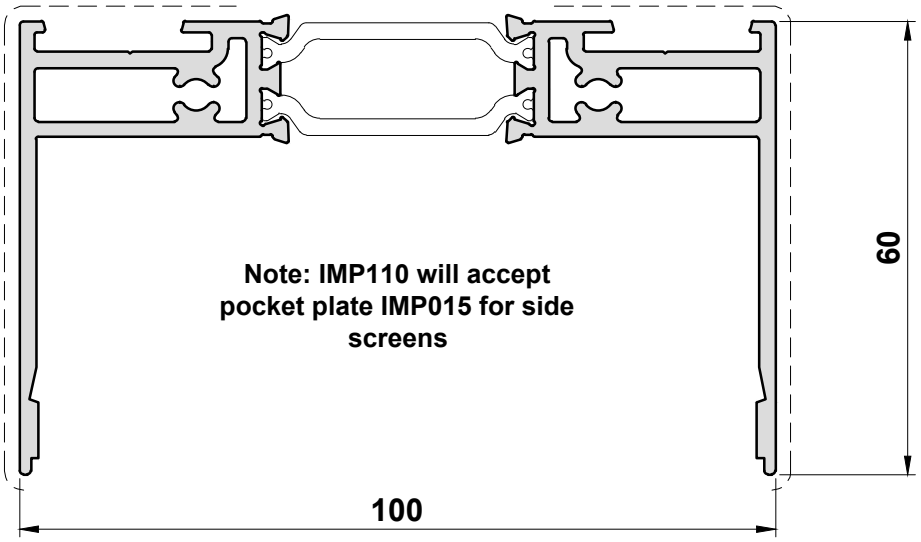

IMP118

Deep Header Bar with Screwports

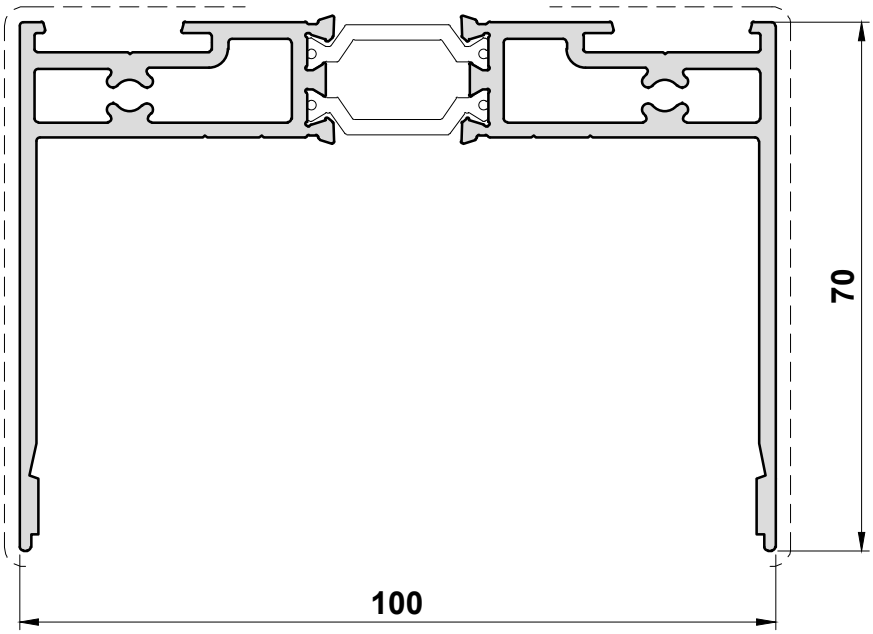

Scale 1:1

Primary Visible Side - - - - - - - - - - - - - - - - - - Secondary Visible Side — · — · — · — · — · — · —

IMP011
Overhead Closure Box

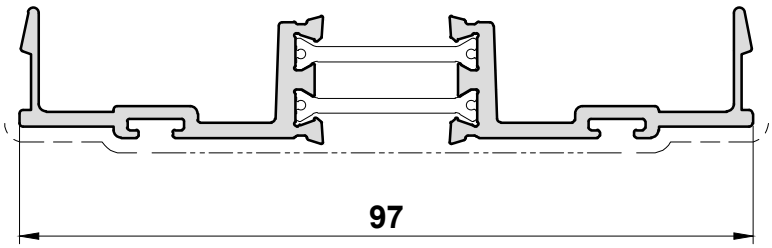

IMP019
Overhead Closure Box
for use with panic bars

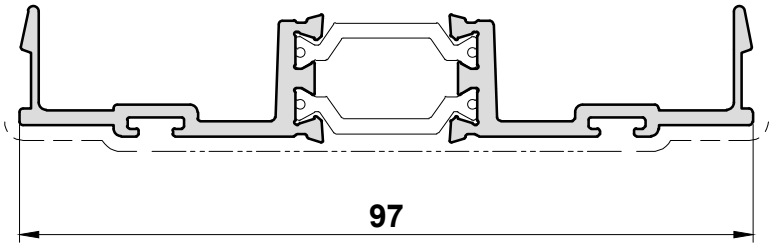

IMP015
Pocket Glazing Clip Plate

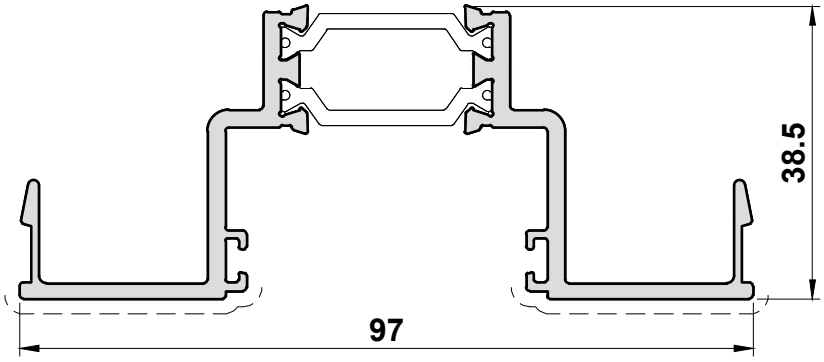

IMP620
Rebate Bead

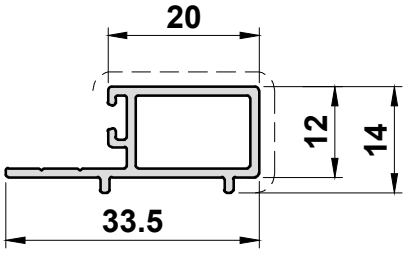

Scale 1:1

Primary Visible Side - - - - - - - - - - - - - - - - - - Secondary Visible Side — · · — · · — · · — · · — · · — · · —

IMP035
Anti-Finger Trap Adapter

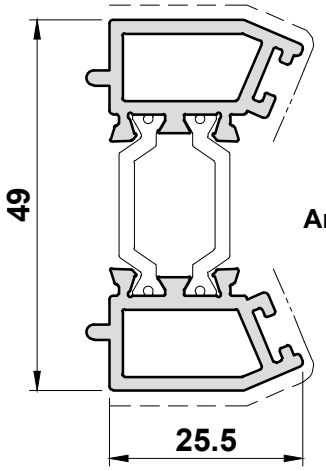

PCX40
Anti-Finger Infill

IMP036N
Anti-Finger Trap Stile

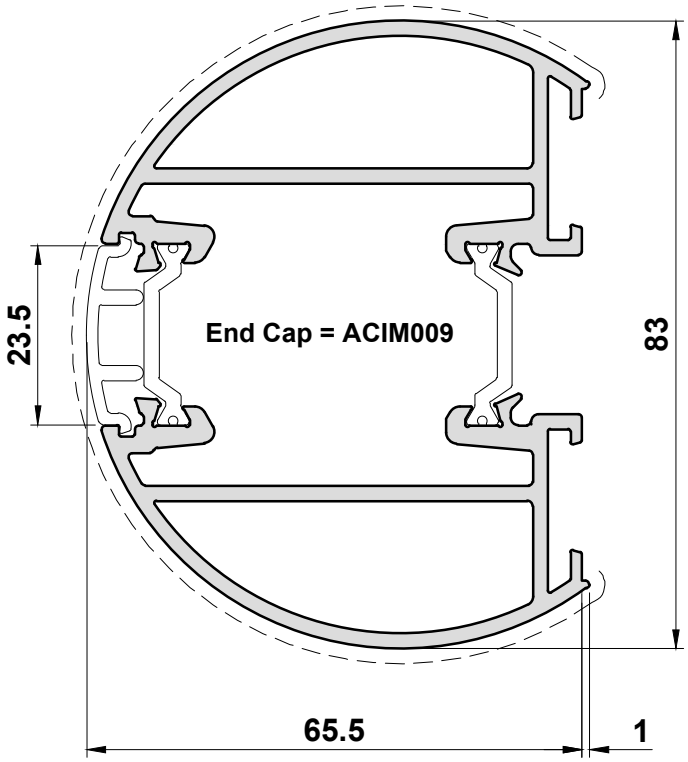

IMP037N
Anti-Finger Trap with
Push Bar Facility

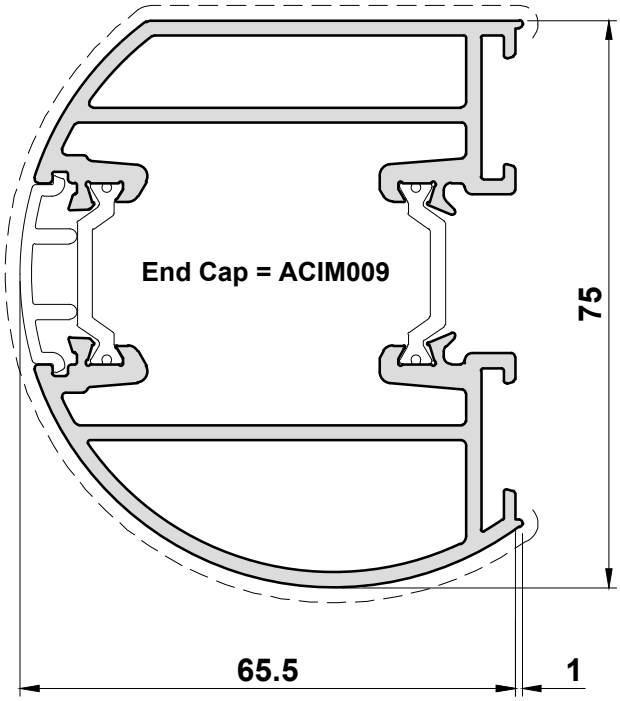

Scale 1:1

Primary Visible Side - - - - - - - - - - - - - - - - Secondary Visible Side — · — · — · — · — · — · — · —

IMP038
Rebated Lock Stile

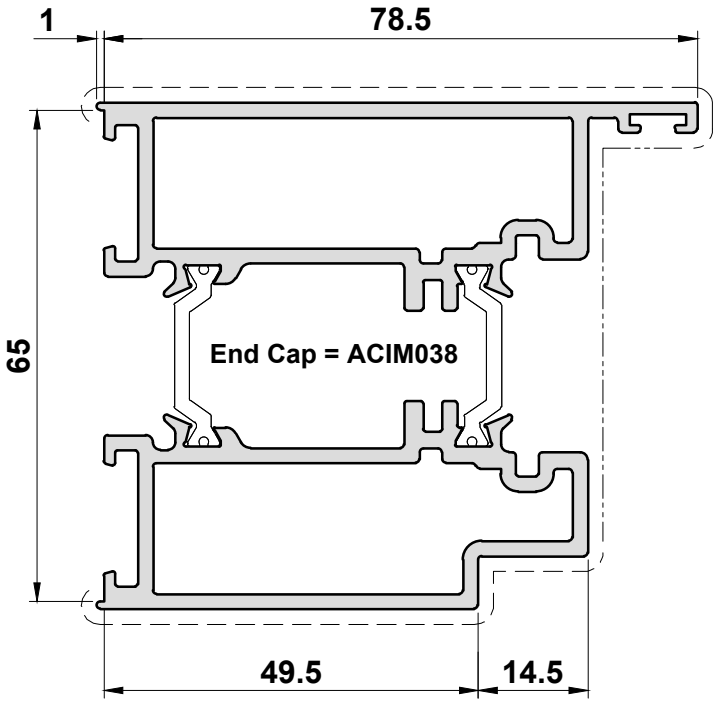

IMP039
Primary Lock Stile

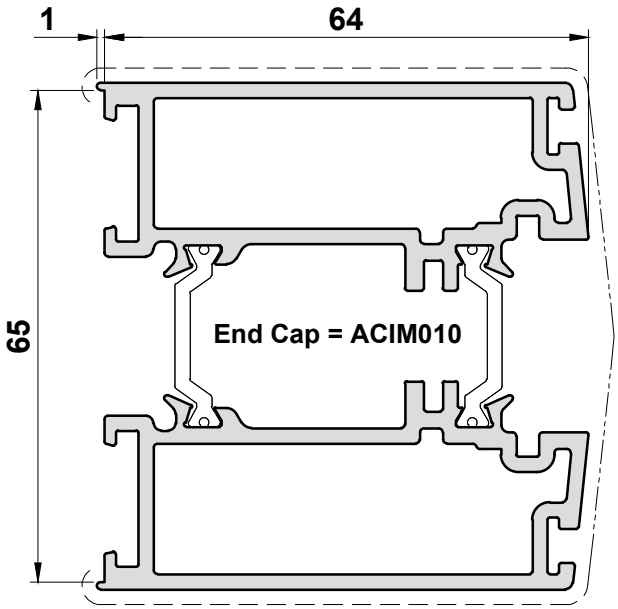

IMP040
Secondary Door Stile

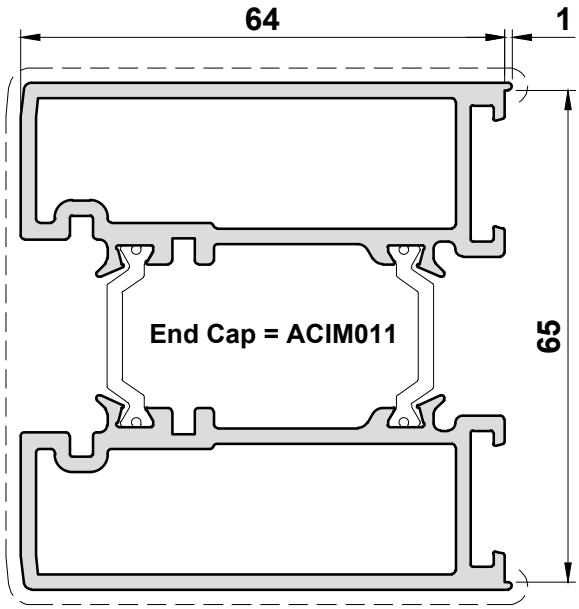

Scale 1:1

Primary Visible Side - - - - - - - - - - - - - - - - - - Secondary Visible Side — · — · — · — · — · — · — · —

IMP041
Stile for Concealed Panic Hardware

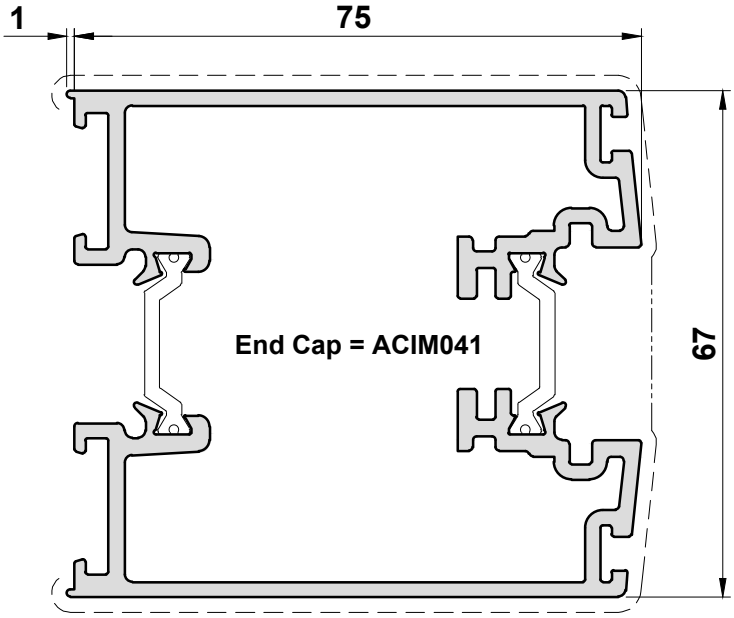

IMP300
Infill Strip PVC

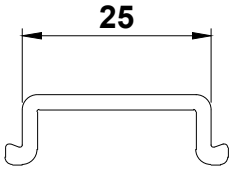

IMP114
Auto Door Interlock

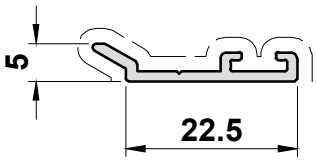

PCX46
PVC Lock Carrier

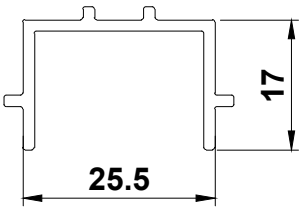

Scale 1:1

Primary Visible Side - - - - - - - - - - - - - - - - - - Secondary Visible Side — · — · — · — · — · — · — · —

IMP042

Flush Rebated Meeting Stile for BT Lock

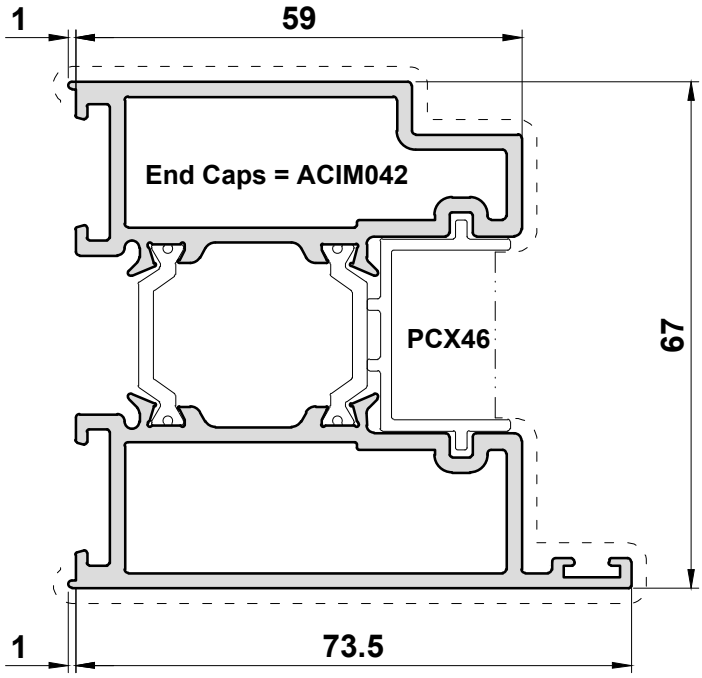

IMP043

Meeting Stile for BT Lock

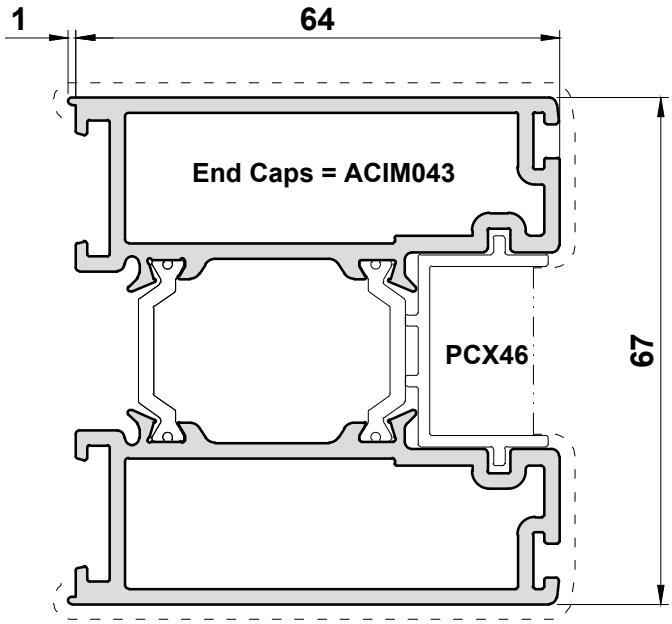

Scale 1:1

Primary Visible Side - - - - - - - - - - - - - - - - - - Secondary Visible Side — · — · — · — · — · — · — · —

IMP025
Wide Primary Door Stile

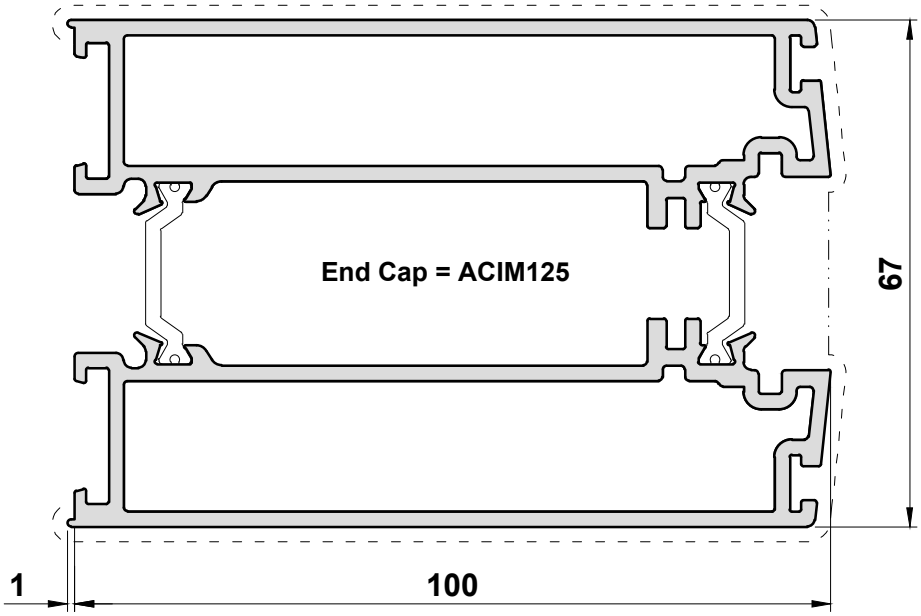

IMP026
Wide Secondary Door Stile

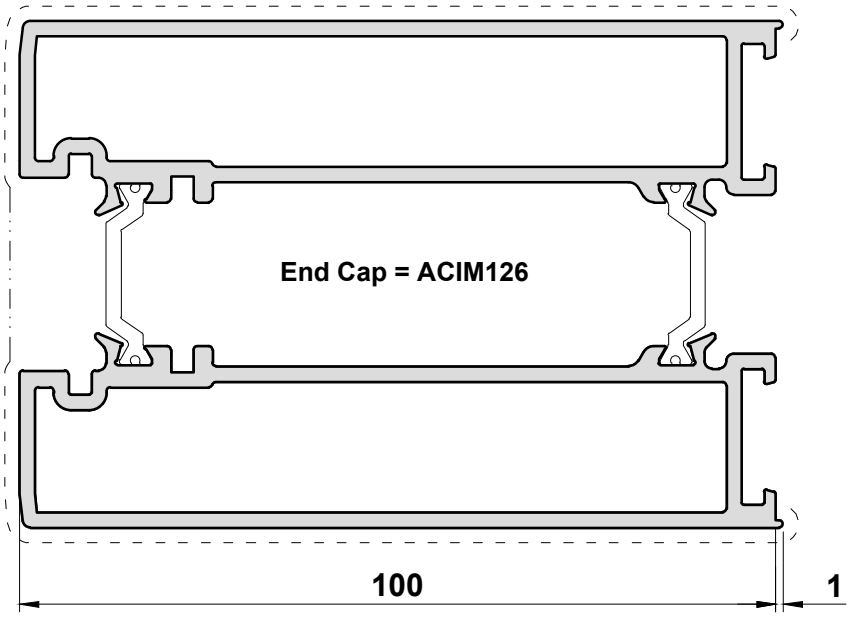

Scale 1:1

Primary Visible Side - - - - - - - - - - - - - - - - - - Secondary Visible Side — · — · — · — · — · — · —

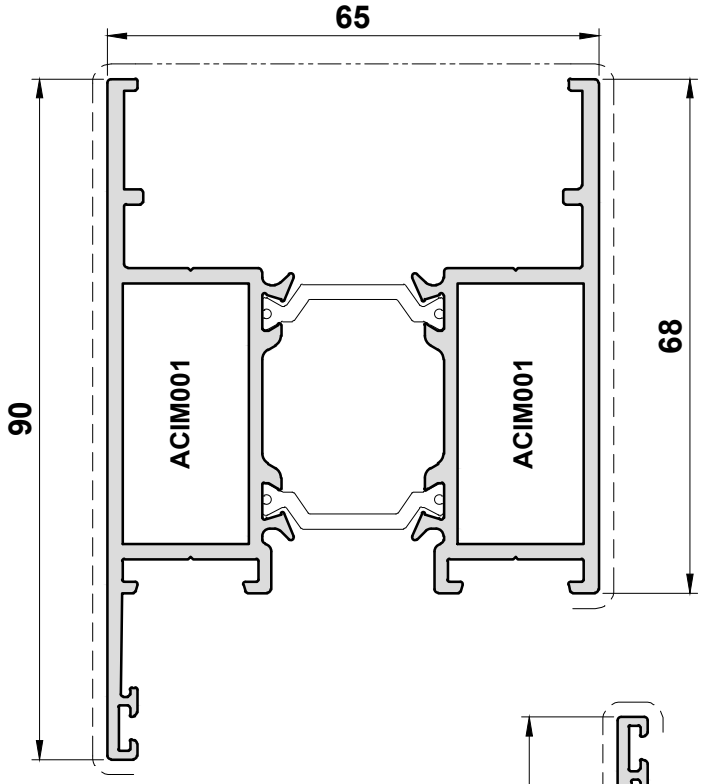

IMP120
Top Rail

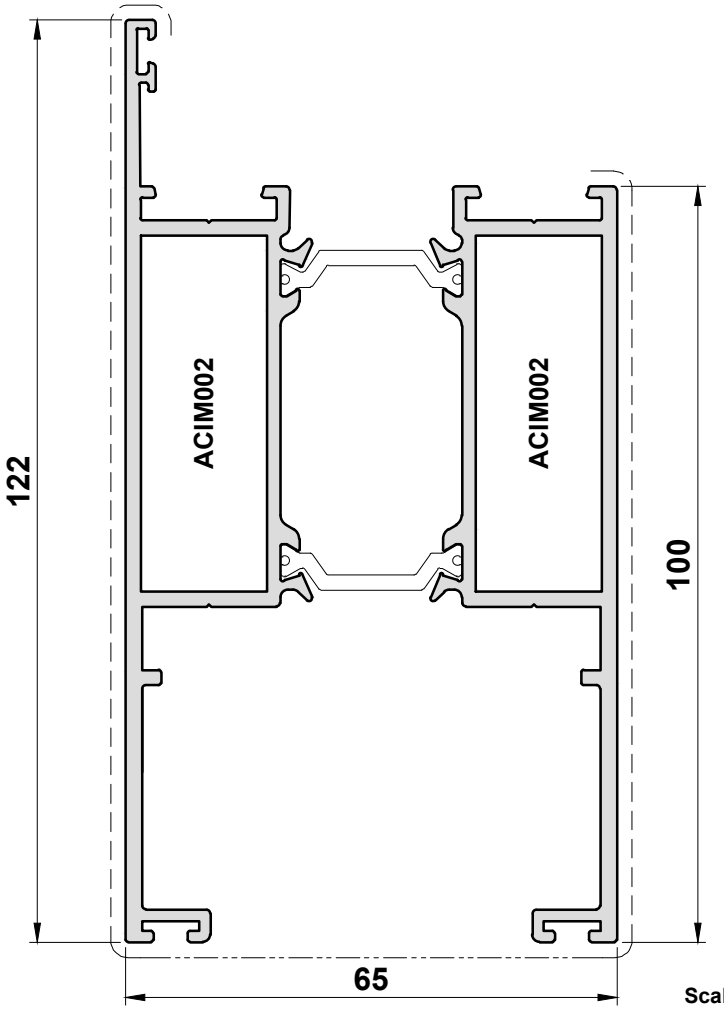

IMP027
Bottom Rail

Scale 1:1

Primary Visible Side - - - - - - - - - - - - - - - - - - Secondary Visible Side —·—·—·—·—·—·—·—

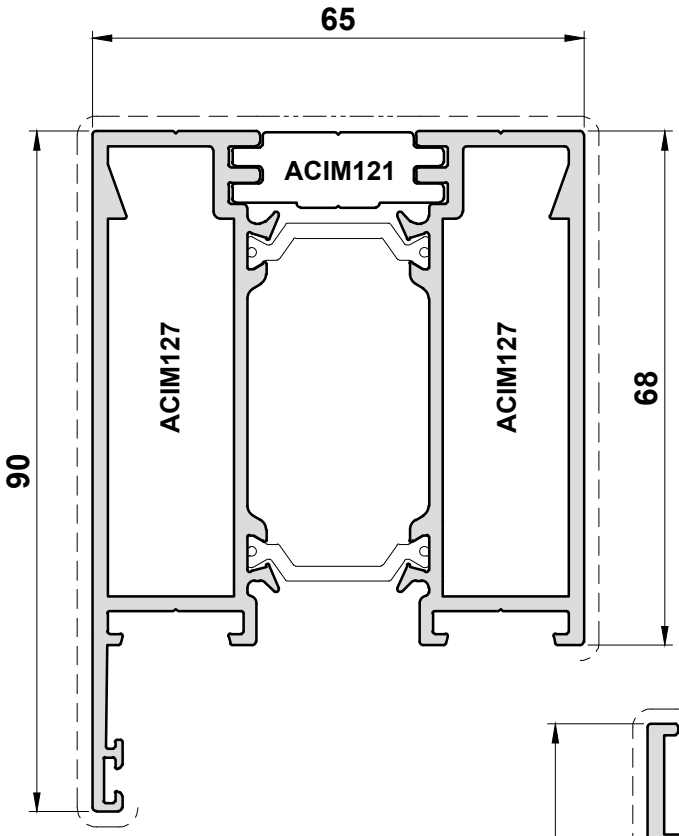

IMP121
Auto-Sliding Door Top Rail

IMP122
Deep Top Rail

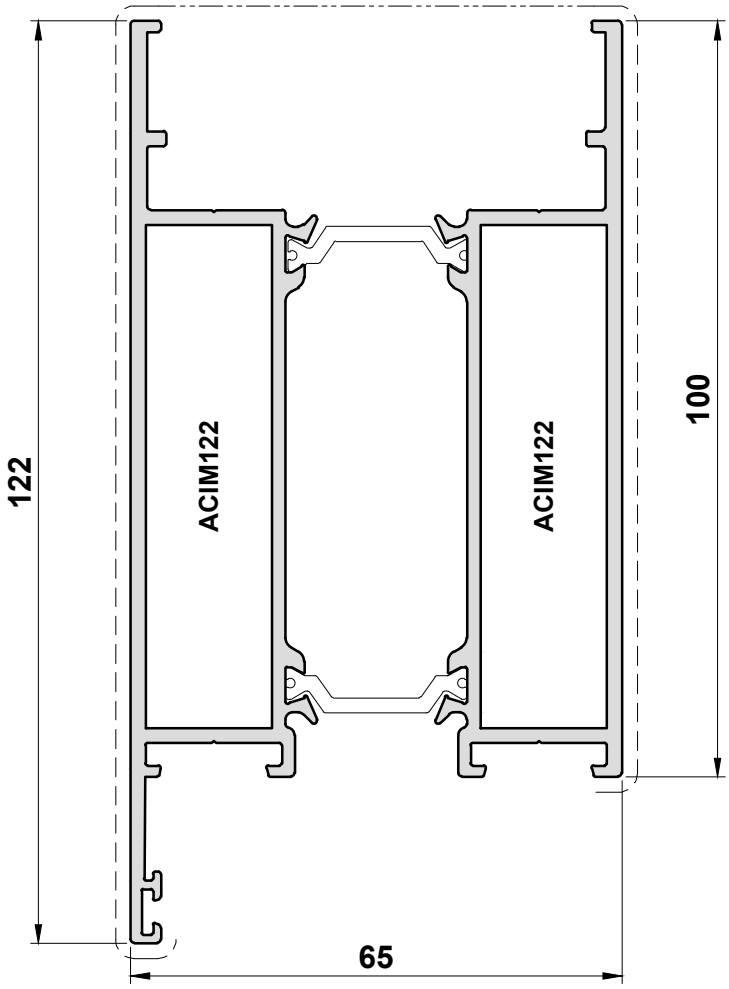

Scale 1:1

Primary Visible Side - - - - - - - - - - - - - - - - - - Secondary Visible Side — · — · — · — · — · — · —

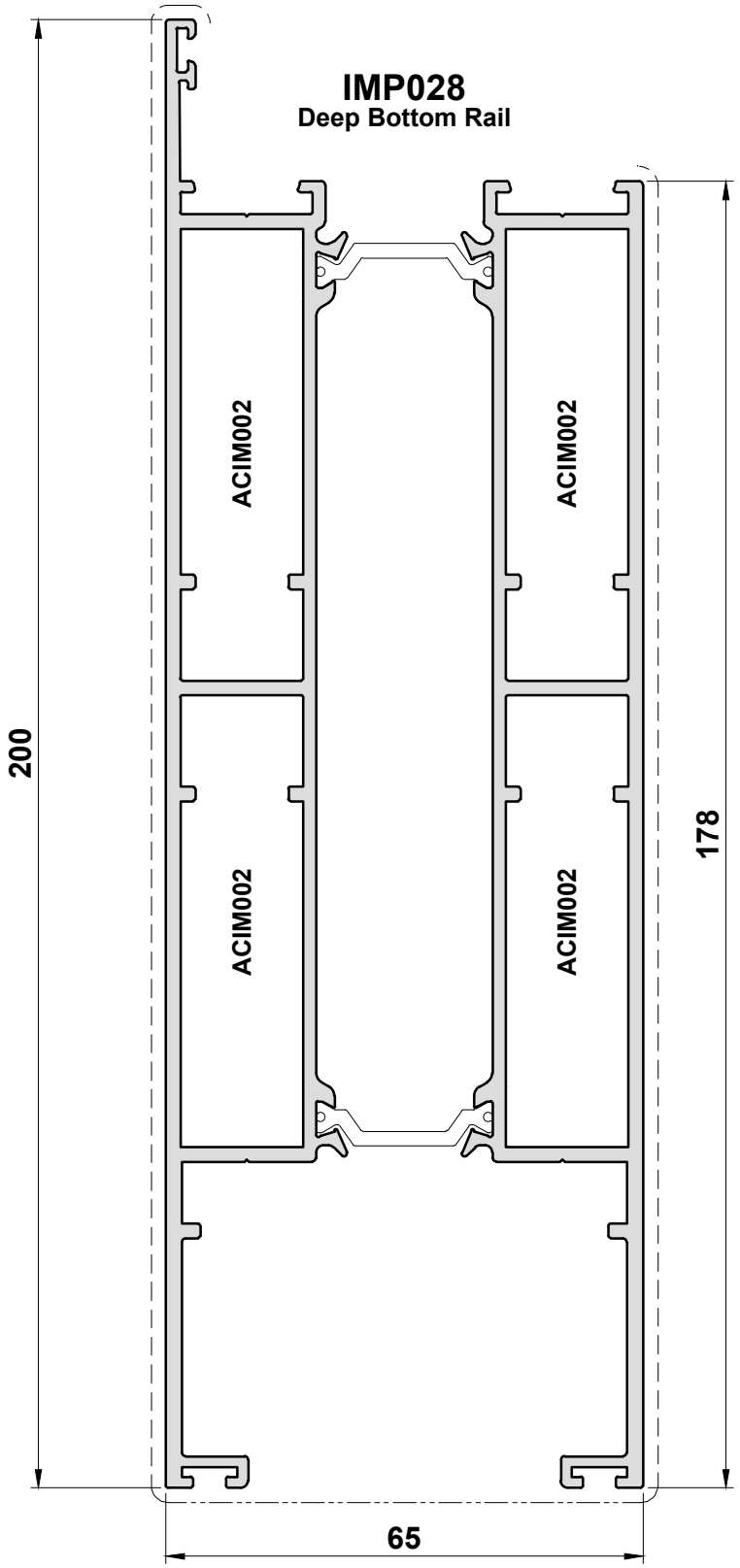

Scale 1:1

Primary Visible Side - - - - - - - - - - - - - - - - - - Secondary Visible Side — · · — · · — · · — · · — · · — · · — · · —

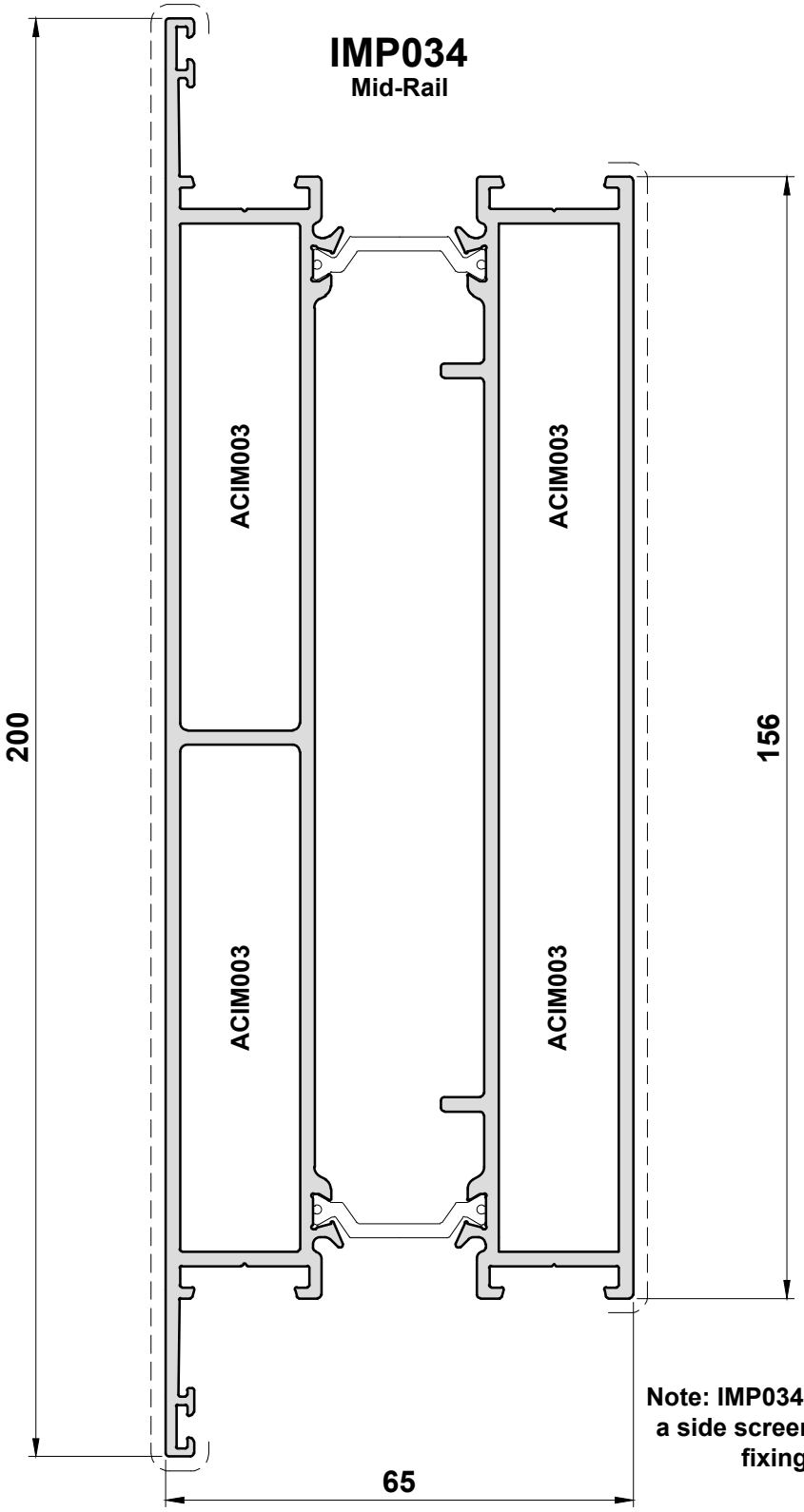

Note: IMP034 can be fitted into a side screen using ACIM025 fixing brackets

Scale 1:1

Primary Visible Side - - - - - - - - - - - - - - - - - - Secondary Visible Side — · — · — · — · — · — · — · —

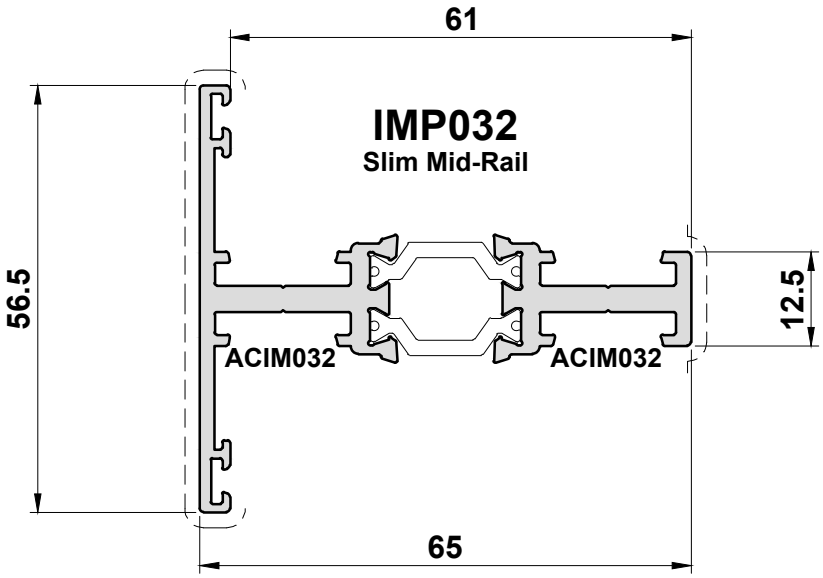

IMP032
Slim Mid-Rail

IMP411
Low Threshold

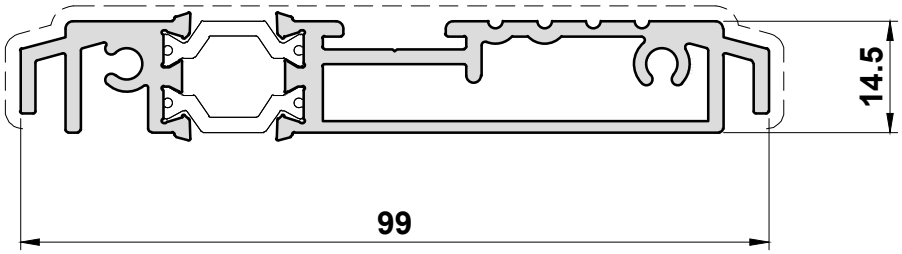

EUD03
Door Threshold Ramp

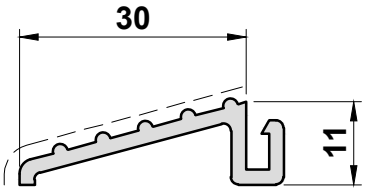

IMP414
Ramped Low Threshold

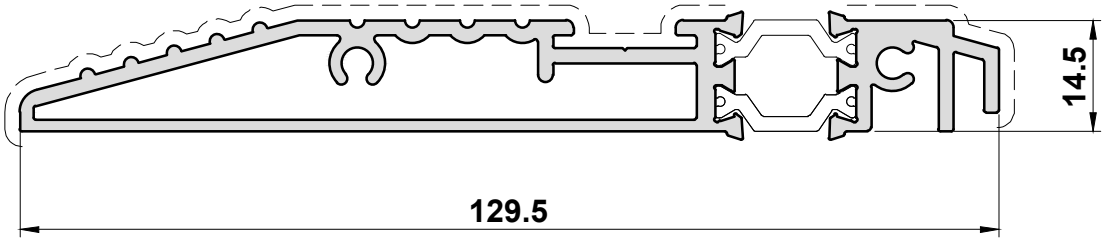

Scale 1:1

Primary Visible Side - - - - - - - - - - - - - - - - - - Secondary Visible Side — · — · — · — · — · — · —

IMP111

Rebated Door Outer Frame

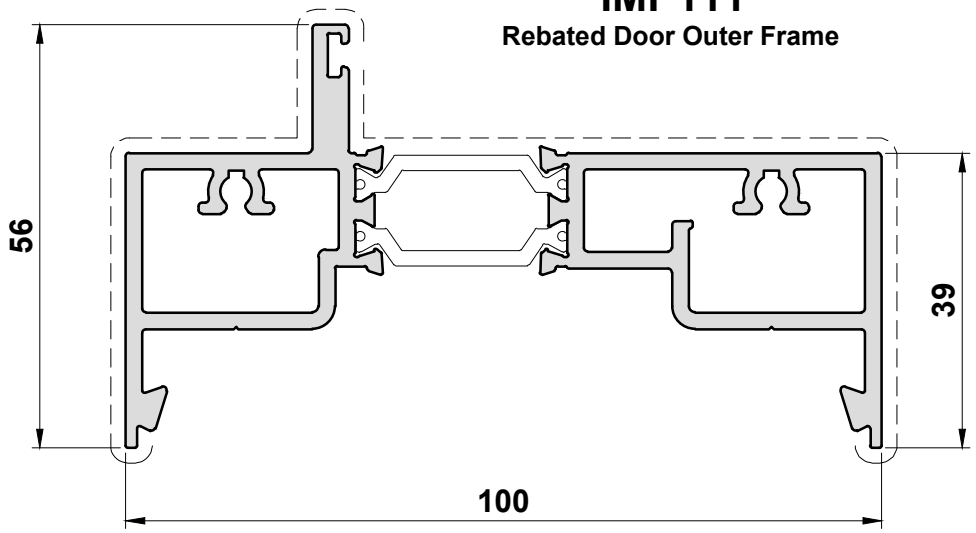

IMP412

Low Threshold for Rebated Door

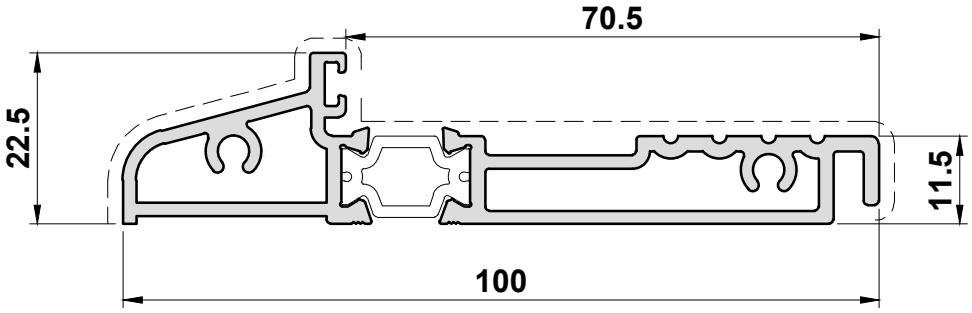

Scale 1:1

Primary Visible Side - - - - - - - - - - - - - - - - - - Secondary Visible Side — · · — · · — · · — · · — · · — · · —

IMP115
Auto Door Header

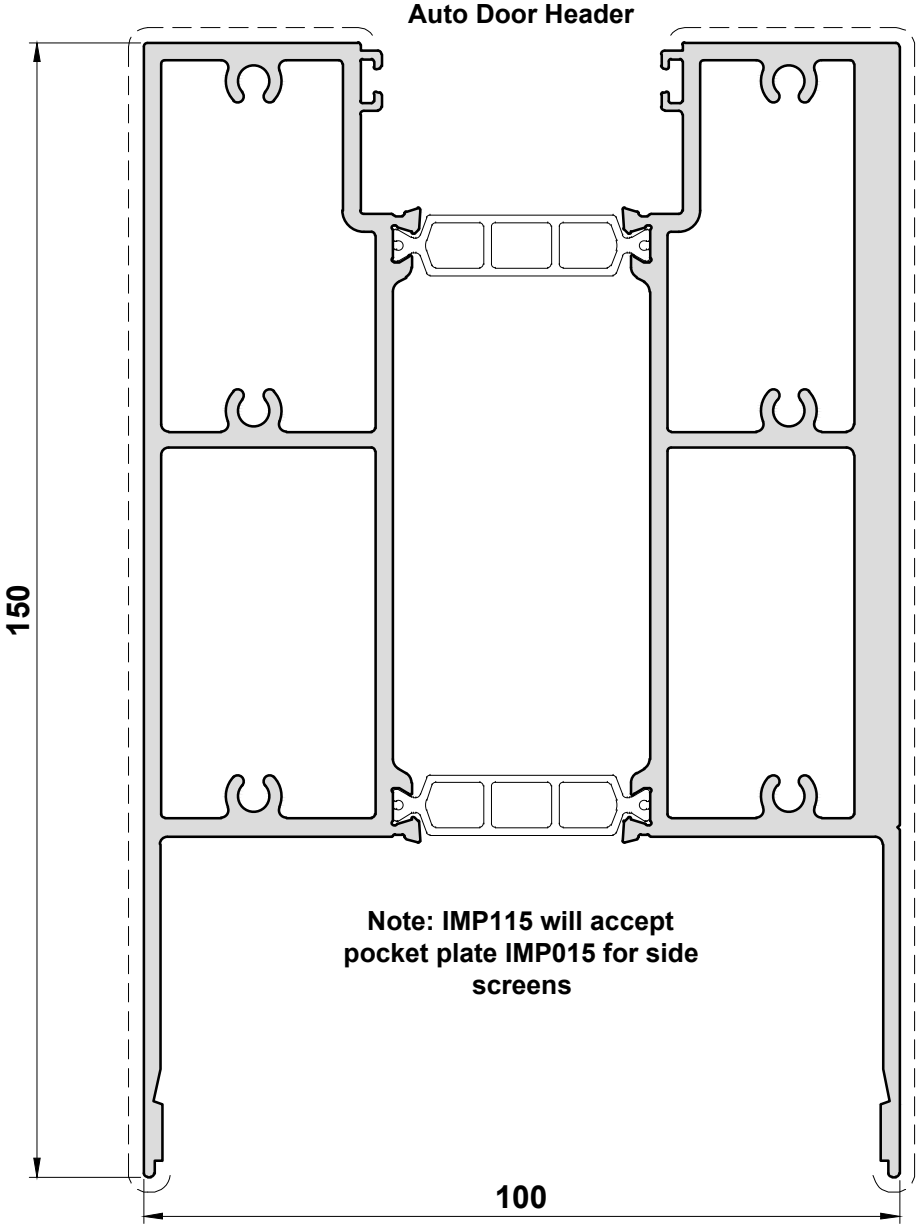

IMP415
Square Back Threshold for Autoslide

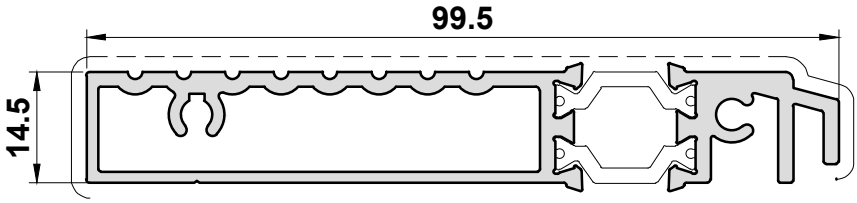

Scale 1:1

Primary Visible Side - - - - - - - - - - - - - - - - - - Secondary Visible Side — · — · — · — · — · — · — · —

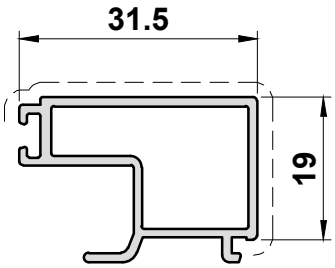

IMP613
28mm Glazing Bead for IMP030 & IMP217

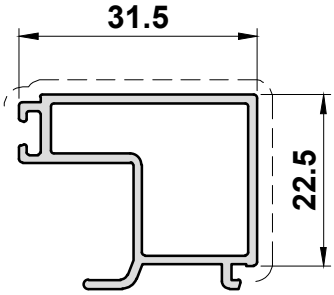

IMP614
28mm Glazing Bead for IMP219

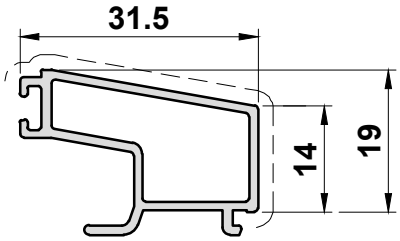

IMP615
28mm Glazing Sloped Bead for IMP030 & IMP217

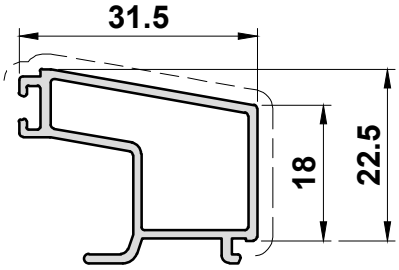

IMP616
28mm Glazing Sloped Bead for IMP219

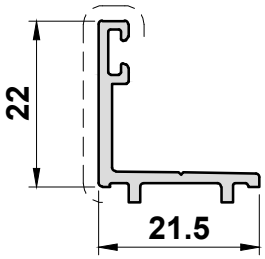

VG12
External Door Bead

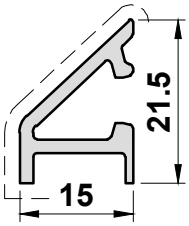

VL72
Weather Drip
End Caps = ACVL059
Fixing Rivet = ACVL061

Scale 1:1

Primary Visible Side - - - - - - - - - - - - - - - - - - Secondary Visible Side — · — · — · — · — · — · — · —

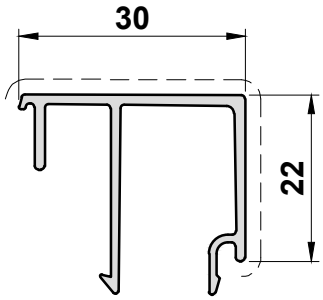

GL030

23-25mm Glazing Bead

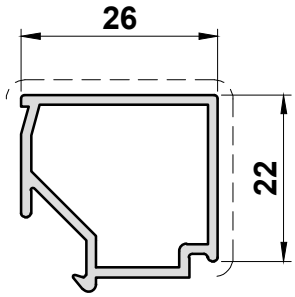

GL526

26-29mm PAS24 Glazing Bead

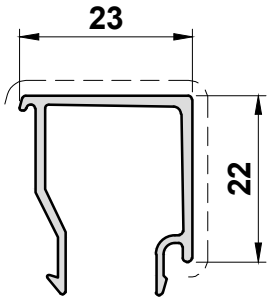

GL023

30-32mm Glazing Bead

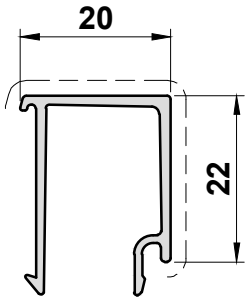

GL020

33-35mm Glazing Bead

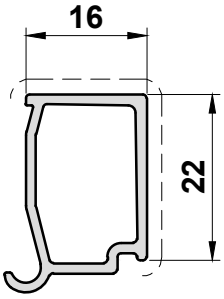

GL1216

36-38mm Glazing Bead

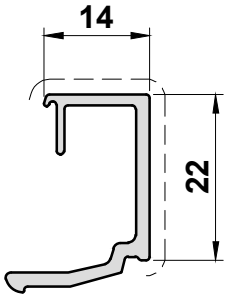

GL014

39-41mm Glazing Bead

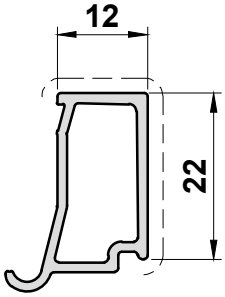

GL1212

42-43mm Glazing Bead

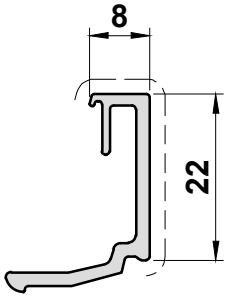

GL008

44-47mm Glazing Bead

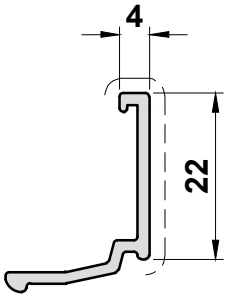

GL004

48-51mm Glazing Bead

Scale 1:1

Primary Visible Side - - - - - - - - - - - - - - - - - - Secondary Visible Side — · · — · · — · · — · · — · · — · · —

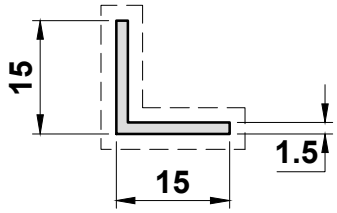

UTL039

Glass Reinforcing

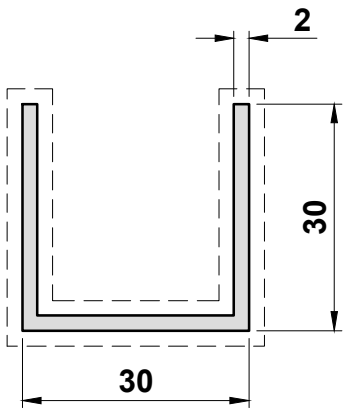

UTL032

Autoslide Guide

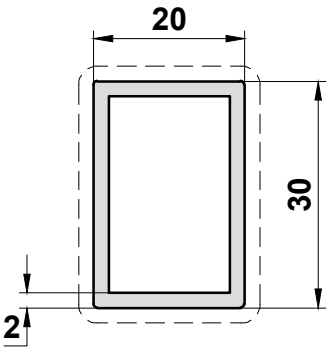

UTL072

Reinforcing Section

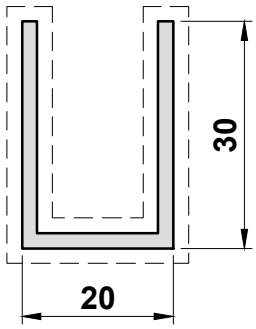

UTL076

Autoslide Guide

Scale 1:1

Primary Visible Side - - - - - - - - - - - - - - - - - - Secondary Visible Side — · — · — · — · — · — · — · —

IMP216

Jamb for Rebated Door

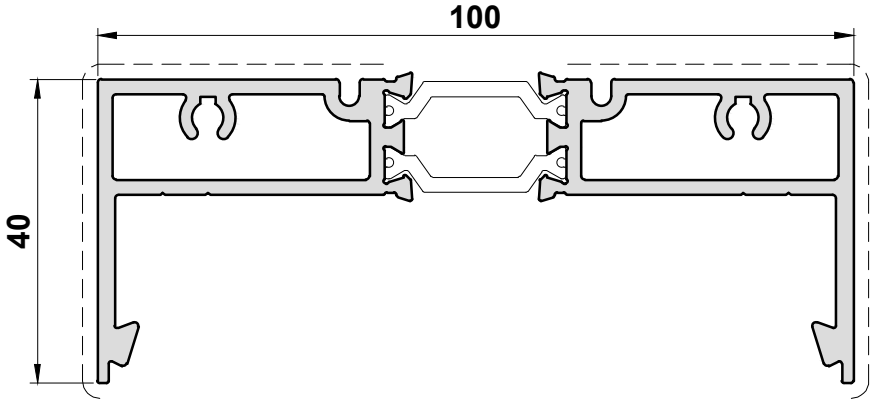

IMP260

Jamb Rebate

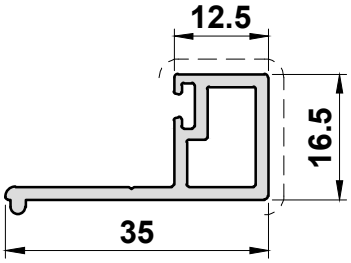

IMP261

Threshold Rebate

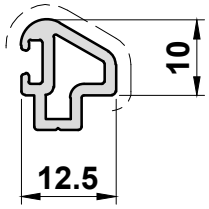

IMP262

Head Rebate

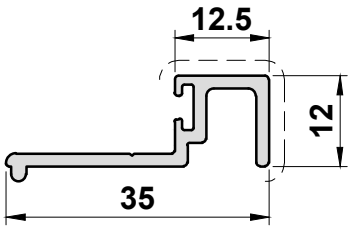

IMP266

Jamb Rebate

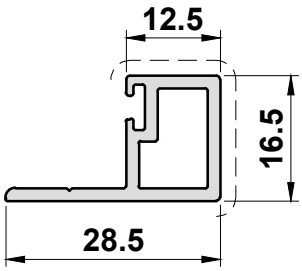

Scale 1:1

Primary Visible Side - - - - - - - - - - - - - - - - - - Secondary Visible Side — · · — · · — · · — · · — · · — · · —

IMP263

Low Threshold for Rebated Door
Open Out

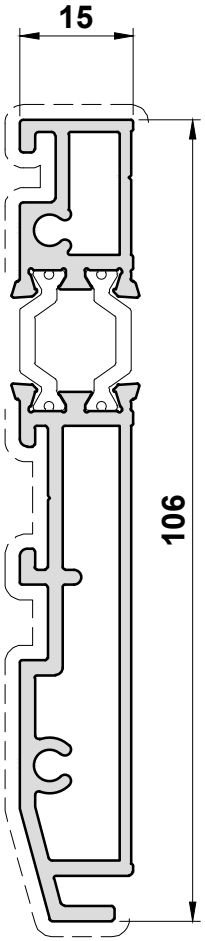

IMP264

Threshold with Rebate
Open In

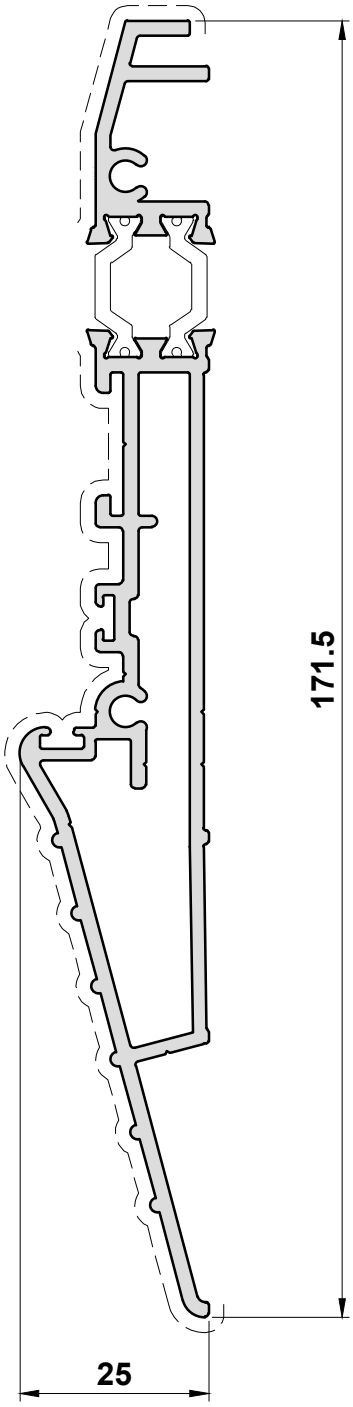

Scale 1:1

Primary Visible Side - - - - - - - - - - - - - - - - - - Secondary Visible Side — · · — · · — · · — · · — · · — · · —

IMP265

Rebated Anti-Finger Trap Adaptor

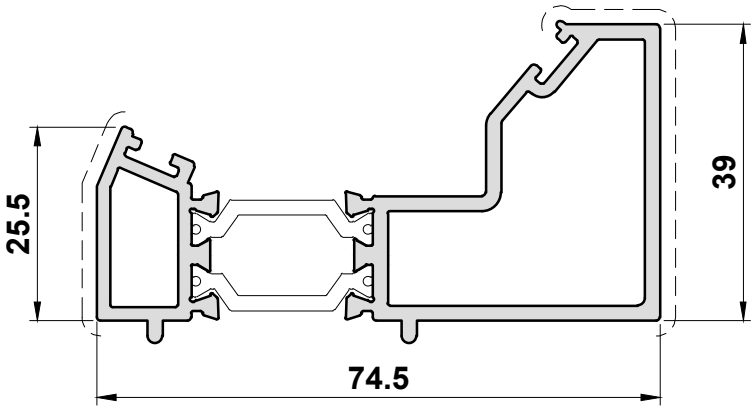

IMP269

Closer Infill Plate for Rebated Door

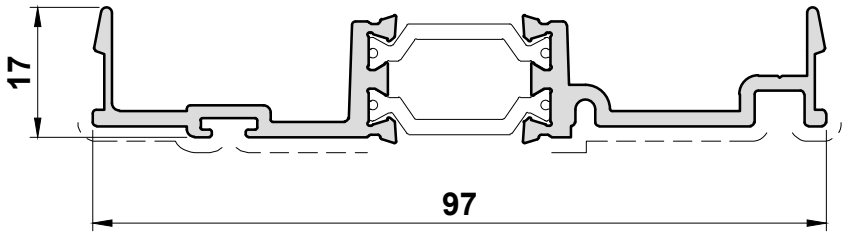

Scale 1:1

Primary Visible Side

Secondary Visible Side

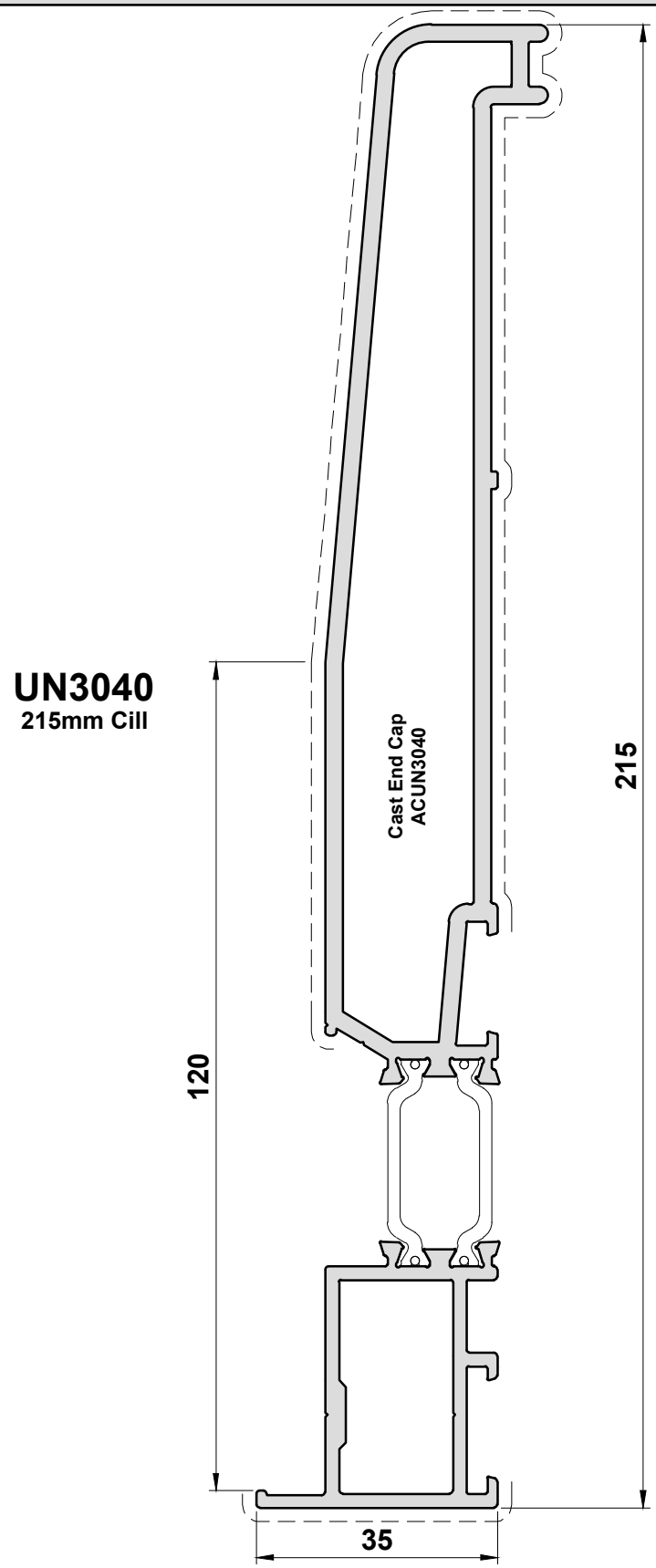

Scale 1:1

Section B

Accessories

Photos & Drawings

Image	Part Code	Pack	Unit	Application	Colour
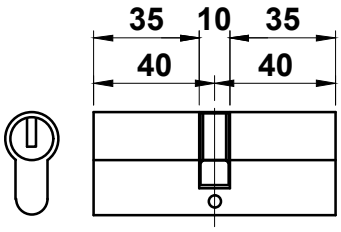	**ACCY4040** **40/40 Standard Security Euro Cylinder** **Nickel finish only** **Add 'SL' to part no. for keyed alike**	**1**	**Each**		MF SA KL HP SSC SMC W Z PC
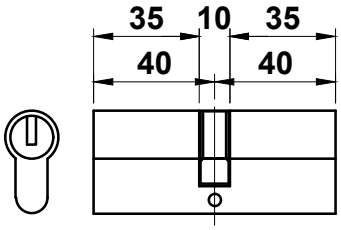	**ACCY4040S1** **40/40 TS007:2014 1 Star Euro Cylinder** **Nickel finish only** **Add 'SL' to part no. for keyed alike**	**1**	**Each**		MF SA KL HP SSC SMC W Z PC
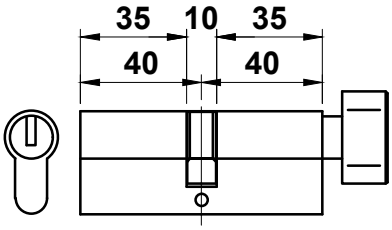	**ACCY4040TT** **40/40 Standard Security Euro Cylinder with Thumbturn** **Nickel finish only** **Add 'SL' to part no. for keyed alike**	**1**	**Each**		MF SA KL HP SSC SMC W Z PC
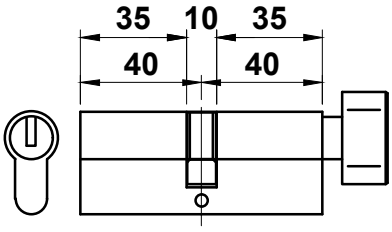	**ACCY4040TTS1** **40/40 TS007:2014 1 Star Euro Cylinder with Thumbturn** **Nickel finish only** **Add 'SL' to part no. for keyed alike**	**1**	**Each**		MF SA KL HP SSC SMC W Z PC
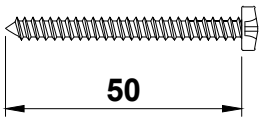	**ACDR052** **No.10 x 50mm** **PH Stainless Steel** **Self Tapping Screw**	**200**	**Pack**		MF ✓ SA KL HP SSC SMC W Z PC

T-BARS
ACVG65=2.5mm
ACVG66=3.0mm
ACVL150=4.0mm

Screw (Grub)

MF	**= Mill Finish**	**W**	**= White**
SA	**= Silver Anodised**	**Z**	**= Black**
KL	**= Basic Colour**		
HP	**= Special Colour**		
SSC	**= Smooth Satin Chrome**		
SMC	**= Smokey Chrome**		
PC	**= Polished Chrome**		

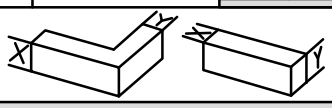

Image	Part Code	Pack	Unit	Application	Colour	
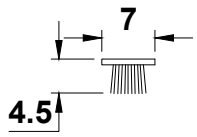	**ACDV205** 7 x 4.5mm Woolpile	50	m	IMP114	MF SA KL HP SSC SMC W Z PC	
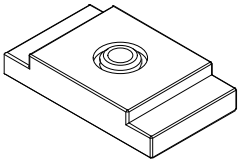	**ACDV241** M4 Fixing Plate	50	Pack	ACSZ040 ACSZ041 ACSZ042	MF SA KL HP SSC SMC W Z PC	
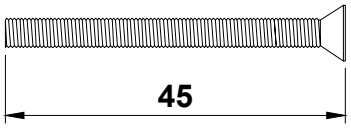	**ACDV266** M4 x 45mm CSK Stainless Steel Pozi Screw	100	Pack	ACSZ040 ACSZ041 ACSZ042	MF SA KL HP SSC SMC W Z PC	
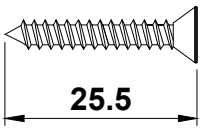	**ACET060** No.7 x 25.5mm CSK Stainless Steel Self Tapping Screw	100	Pack		MF ✓ SA KL HP SSC SMC W Z PC	
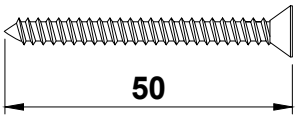	**ACET062** No.10 x 50mm CSK Stainless Steel Self Tapping Screw	100	Pack		MF ✓ SA KL HP SSC SMC W Z PC	

T-BARS
ACVG65=2.5mm
ACVG66=3.0mm
ACVL150=4.0mm

Screw (Grub)

MF	= Mill Finish	W	= White
SA	= Silver Anodised	Z	= Black
KL	= Basic Colour		
HP	= Special Colour		
SSC	= Smooth Satin Chrome		
SMC	= Smokey Chrome		
PC	= Polished Chrome		

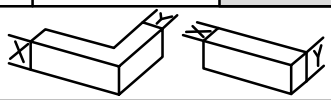

Image	Part Code	Pack	Unit	Application	Colour
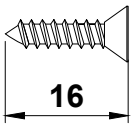	**ACET064** **No.8 x 16mm** **Flanged CSK Stainless Steel** **Self Tapping Screw**	**100**	**Pack**		MF ✓ SA KL HP SSC SMC W Z PC
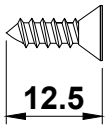	**ACET067** **No.7 x 12.5mm** **CSK Stainless Steel** **Self Tapping Screw**	**100**	**Pack**		MF ✓ SA KL HP SSC SMC W Z PC
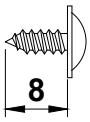	**ACET068** **No.8 x 3/8mm** **Pozi Self Tapping Flanged** **Button Screws**	**100**	**Pack**		MF ✓ SA KL HP SSC SMC W Z PC
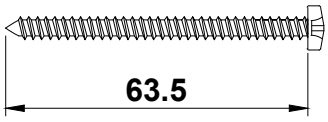	**ACET079** **No.10 x 63.5mm** **PH Stainless Steel** **Self Tapping Screw**	**100**	**Pack**		MF ✓ SA KL HP SSC SMC W Z PC
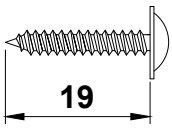	**ACET099** **No.8 x 19mm** **Flanged CSK Stainless Steel** **Self Tapping Screw**	**100**	**Pack**		MF ✓ SA KL HP SSC SMC W Z PC

T-BARS
ACVG65=2.5mm
ACVG66=3.0mm
ACVL150=4.0mm

Screw (Grub)

MF = Mill Finish
SA = Silver Anodised
KL = Basic Colour
HP = Special Colour
SSC = Smooth Satin Chrome
SMC = Smokey Chrome
PC = Polished Chrome
W = White
Z = Black

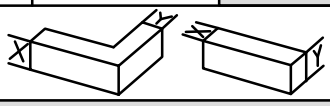

Image	Part Code	Pack	Unit	Application	Colour	
	ACET160R **Flipper Gasket**	**100**	**m**	**IMP211** **IMP031**	MF	
					SA	
					KL	
					HP	
					SSC	
					SMC	
					W	
					Z	✓
					PC	
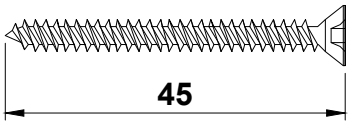	**ACET190** **4.3 x 45mm** **CSK Polyamide Screw**	**1000**	**Pack**		MF	✓
					SA	
					KL	
					HP	
					SSC	
					SMC	
					W	
					Z	
					PC	
	ACET232 **Threshold Gasket** **with Upstand**	**100**	**m**	**IMP264**	MF	
					SA	
					KL	
					HP	
					SSC	
					SMC	
					W	
					Z	✓
					PC	
	ACET234 **Threshold Gasket**	**100**	**m**	**IMP264**	MF	
					SA	
					KL	
					HP	
					SSC	
					SMC	
					W	
					Z	✓
					PC	
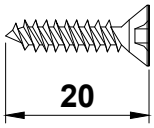	**ACET290** **4.3 x 20mm** **Polyamide CSK Screw**	**1000**	**Pack**		MF	✓
					SA	
					KL	
					HP	
					SSC	
					SMC	
					W	
					Z	
					PC	

T-BARS
ACVG65=2.5mm
ACVG66=3.0mm
ACVL150=4.0mm

Screw (Grub)

MF = Mill Finish
SA = Silver Anodised
KL = Basic Colour
HP = Special Colour
SSC = Smooth Satin Chrome
SMC = Smokey Chrome
PC = Polished Chrome
W = White
Z = Black

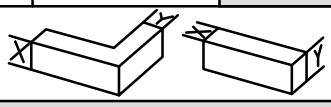

Image	Part Code	Pack	Unit	Application	Colour	
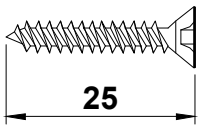	**ACET290** **4.3 x 25mm** **Polyamide CSK Screw**	**1000**	**Pack**		MF	✓
					SA	
					KL	
					HP	
					SSC	
					SMC	
					W	
					Z	
					PC	
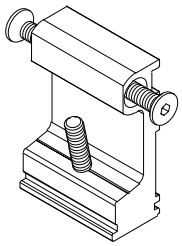	**ACIM001** **Cleat**	**24**	**Pack**	**IMP039** **IMP040** **IMP120**	MF	✓
					SA	
					KL	
					HP	
					SSC	
					SMC	
					W	
					Z	
					PC	
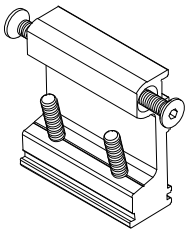	**ACIM002** **Cleat**	**24**	**Pack**	**IMP027** **IMP028** **IMP039** **IMP040**	MF	✓
					SA	
					KL	
					HP	
					SSC	
					SMC	
					W	
					Z	
					PC	
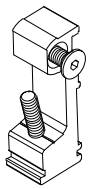	**ACIM003** **Cleat**	**24**	**Pack**	**IMP034** **IMP039** **IMP040**	MF	✓
					SA	
					KL	
					HP	
					SSC	
					SMC	
					W	
					Z	
					PC	
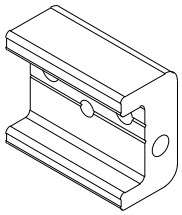	**ACIM004** **Door Rail Cleat**	**24**	**Pack**	**IMP210**	MF	✓
					SA	
					KL	
					HP	
					SSC	
					SMC	
					W	
					Z	
					PC	

T-BARS
ACVG65=2.5mm
ACVG66=3.0mm
ACVL150=4.0mm

Screw (Grub)

MF = Mill Finish
SA = Silver Anodised
KL = Basic Colour
HP = Special Colour
SSC = Smooth Satin Chrome
SMC = Smokey Chrome
PC = Polished Chrome
W = White
Z = Black

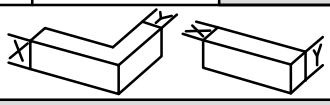

Image	Part Code	Pack	Unit	Application	Colour	
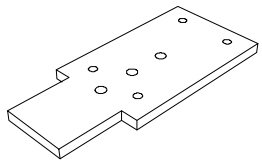	**ACIM005** **Bottom Bracket**	**1**	**Each**	**IMP027** **IMP028**	MF	✓
					SA	
					KL	
					HP	
					SSC	
					SMC	
					W	
					Z	
					PC	
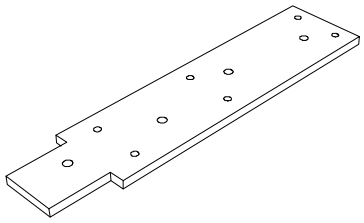	**ACIM006** **Top Bracket**	**1**	**Each**	**IMP120** **IMP122**	MF	✓
					SA	
					KL	
					HP	
					SSC	
					SMC	
					W	
					Z	
					PC	
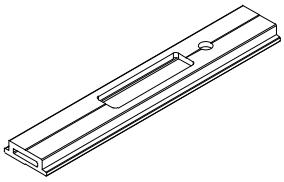	**ACIM008** **Keep-Double Door**	**1**	**Each**	**IMP040**	MF	
					SA	✓
					KL	
					HP	
					SSC	
					SMC	
					W	
					Z	
					PC	
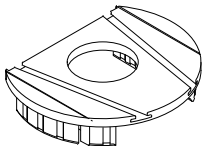	**ACIM009** **Bottom End Cap** **4.5mm thick**	**10**	**Pack**	**IMP036N** **IMP037N**	MF	
					SA	
					KL	
					HP	
					SSC	
					SMC	
					W	✓
					Z	✓
					PC	
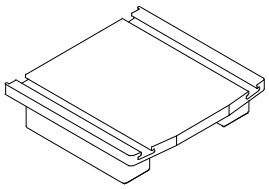	**ACIM010** **Primary Leaf End Cap** **4.5mm thick**	**10**	**Pack**	**IMP039**	MF	
					SA	
					KL	
					HP	
					SSC	
					SMC	
					W	✓
					Z	✓
					PC	

T-BARS
ACVG65=2.5mm
ACVG66=3.0mm
ACVL150=4.0mm

Screw (Grub)

MF = Mill Finish
SA = Silver Anodised
KL = Basic Colour
HP = Special Colour
SSC = Smooth Satin Chrome
SMC = Smokey Chrome
PC = Polished Chrome
W = White
Z = Black

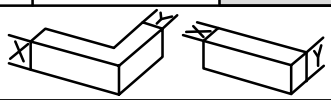

Image	Part Code	Pack	Unit	Application	Colour	
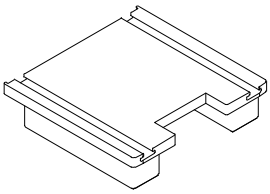	**ACIM011** **Secondary Leaf End Cap** **4.5mm thick**	**10**	**Pack**	**IMP040**	MF	
					SA	
					KL	
					HP	
					SSC	
					SMC	
					W	✓
					Z	✓
					PC	
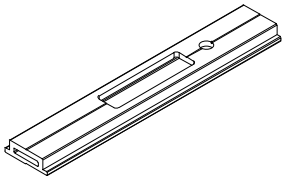	**ACIM012** **Keep-Single Door**	**1**	**Each**	**IMP210**	MF	
					SA	✓
					KL	
					HP	
					SSC	
					SMC	
					W	
					Z	
					PC	
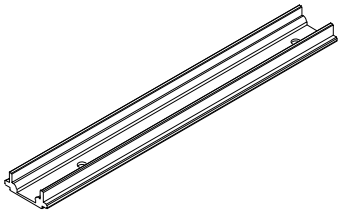	**ACIM016** **Packer -** **Finger Bolt**	**10**	**Pack**	**ACVL432** **IMP026** **IMP038** **IMP040** **IMP041**	MF	
					SA	
					KL	
					HP	
					SSC	
					SMC	
					W	✓
					Z	✓
					PC	
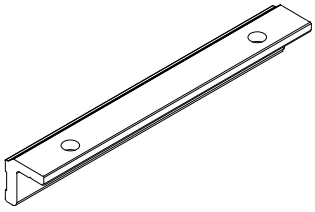	**ACIM017** **Door Stop** **Include Tape**	**10**	**Pack**	**IMP011**	MF	✓
					SA	✓
					KL	✓
					HP	✓
					SSC	
					SMC	
					W	✓
					Z	✓
					PC	
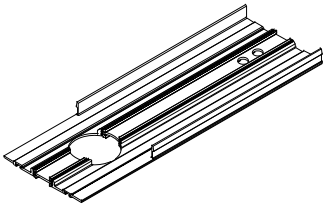	**ACIM018** **300mm Cover Plate -** **65mm Closer**	**1**	**Each**	**IMP110**	MF	✓
					SA	✓
					KL	✓
					HP	✓
					SSC	
					SMC	
					W	✓
					Z	✓
					PC	

T-BARS
ACVG65=2.5mm
ACVG66=3.0mm
ACVL150=4.0mm

Screw (Grub)

MF = Mill Finish
SA = Silver Anodised
KL = Basic Colour
HP = Special Colour
SSC = Smooth Satin Chrome
SMC = Smokey Chrome
PC = Polished Chrome
W = White
Z = Black

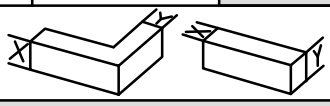

Image	Part Code	Pack	Unit	Application	Colour	
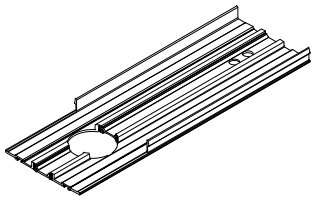	**ACIM019** **300mm Cover Plate - 65mm Closer**	**1**	**Each**	**IMP019**	MF	✓
					SA	✓
					KL	✓
					HP	✓
					SSC	
					SMC	
					W	✓
					Z	✓
					PC	
	ACIM020 **S/Steel Self Tapping Screw**	**100**	**Pack**	**IMP040**	MF	✓
					SA	
					KL	
					HP	
					SSC	
					SMC	
					W	
					Z	
					PC	
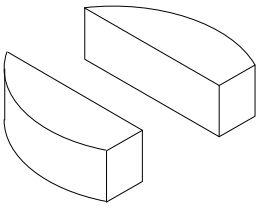	**ACIM021** **Foam Infill**	**10**	**Pack**	**IMP036N** **IMP037N**	MF	
					SA	
					KL	
					HP	
					SSC	
					SMC	
					W	
					Z	✓
					PC	
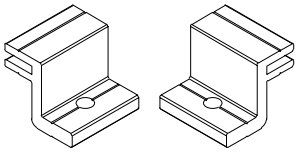	**ACIM022** **Lock Fixing Bracket**	**1**	**Each**	**IMP039** **IMP125**	MF	✓
					SA	
					KL	
					HP	
					SSC	
					SMC	
					W	
					Z	
					PC	
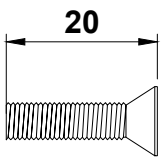	**ACIM023** **M6 x 20mm Closer Fixing Screw**	**100**	**Pack**	**IMP110**	MF	✓
					SA	
					KL	
					HP	
					SSC	
					SMC	
					W	
					Z	
					PC	

T-BARS
ACVG65=2.5mm
ACVG66=3.0mm
ACVL150=4.0mm

Screw (Grub)

MF = Mill Finish
SA = Silver Anodised
KL = Basic Colour
HP = Special Colour
SSC = Smooth Satin Chrome
SMC = Smokey Chrome
PC = Polished Chrome
W = White
Z = Black

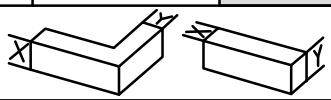

Image	Part Code	Pack	Unit	Application	Colour	
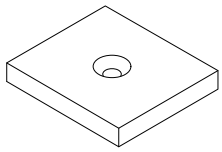	**ACIM024** **Fixing Plate (PVC)**	**50**	**Pack**	**IMP210** **IMP310** **IMP410**	MF SA KL HP SSC SMC W Z PC	 ✓
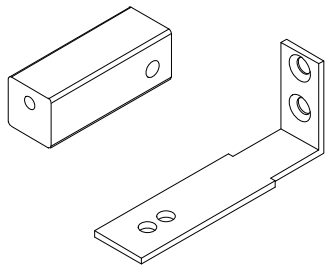	**ACIM025** **Mid Rail Fixing Brackets**	**24**	**Pack**	**IMP016** **IMP034** **IMP210** **IMP310** **IMP410**	MF SA KL HP SSC SMC W Z PC	✓
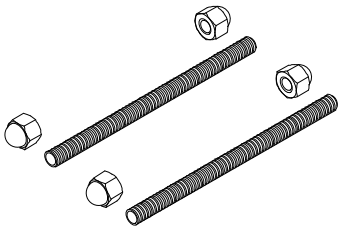	**ACIM030** **Pad Handle Fixings** **M6 x 100mm**	**1**	**Set**	**ACMX05520** **ACMX05522**	MF SA KL HP SSC SMC W Z PC	✓
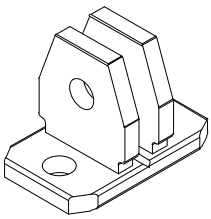	**ACIM032** **Brackets for IMP032**	**24**	**Pack**	**IMP032**	MF SA KL HP SSC SMC W Z PC	✓
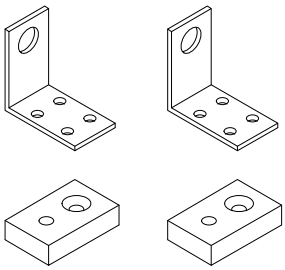	**ACIM033** **Shoot Bolt Fixing Kit**	**24**	**Pack**	**IMP026** **IMP038** **IMP040** **IMP041**	MF SA KL HP SSC SMC W Z PC	✓

T-BARS
ACVG65=2.5mm
ACVG66=3.0mm
ACVL150=4.0mm

Screw (Grub)

MF = Mill Finish
SA = Silver Anodised
KL = Basic Colour
HP = Special Colour
SSC = Smooth Satin Chrome
SMC = Smokey Chrome
PC = Polished Chrome
W = White
Z = Black

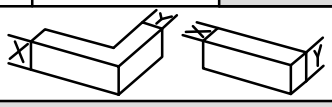

Image	Part Code	Pack	Unit	Application	Colour	
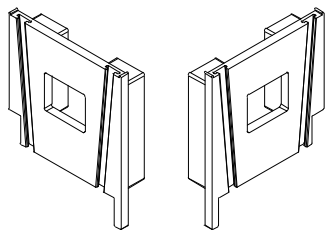	**ACIM038** **Bottom End Cap for IMP038**	**10**	**Pairs**	**IMP038**	MF	
					SA	
					KL	
					HP	
					SSC	
					SMC	
					W	✓
					Z	✓
					PC	
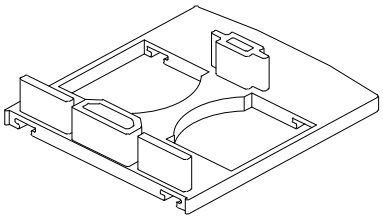	**ACIM041** **Bottom End Cap for IMP041**	**10**	**Pack**	**IMP041**	MF	
					SA	
					KL	
					HP	
					SSC	
					SMC	
					W	✓
					Z	✓
					PC	
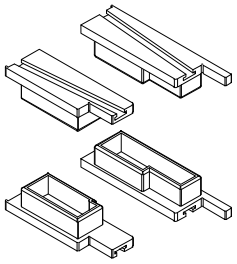	**ACIM042** **IMP042 Endcap**	**1**	**Set**	**IMP042**	MF	
					SA	
					KL	
					HP	
					SSC	
					SMC	
					W	
					Z	✓
					PC	
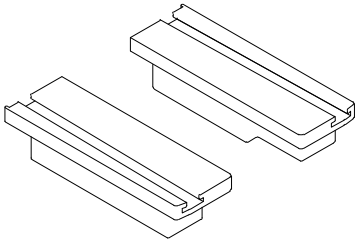	**ACIM043** **IMP043 Endcap**	**1**	**Set**	**IMP043**	MF	
					SA	
					KL	
					HP	
					SSC	
					SMC	
					W	
					Z	✓
					PC	
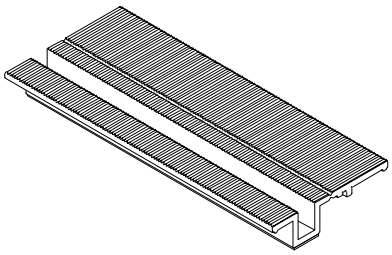	**ACIM057** **Bridge Packer**	**10**	**Pack**		MF	
					SA	
					KL	
					HP	
					SSC	
					SMC	
					W	
					Z	✓
					PC	

T-BARS
ACVG65=2.5mm
ACVG66=3.0mm
ACVL150=4.0mm

Screw (Grub)

MF = Mill Finish
SA = Silver Anodised
KL = Basic Colour
HP = Special Colour
SSC = Smooth Satin Chrome
SMC = Smokey Chrome
PC = Polished Chrome
W = White
Z = Black

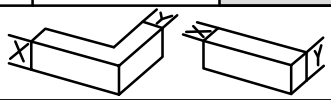

Image	Part Code	Pack	Unit	Application	Colour	
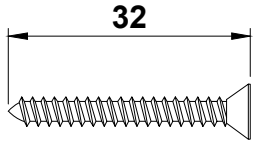	**ACIM062** No.10 x 32mm CSK Stainless Steel Self Tapping Screw	100	Pack		MF	✓
					SA	
					KL	
					HP	
					SSC	
					SMC	
					W	
					Z	
					PC	
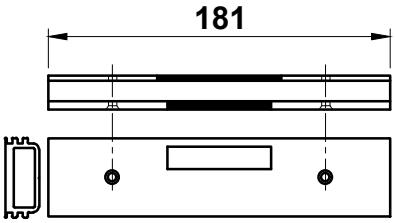	**ACIM112** Keep for Single Auto Sliding Doors	1	Each	IMP210	MF	
					SA	✓
					KL	
					HP	
					SSC	
					SMC	
					W	
					Z	
					PC	
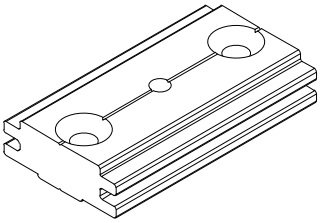	**ACIM121** Auto Sliding Door Fixing Bracket	10	Pack	IMP121	MF	✓
					SA	
					KL	
					HP	
					SSC	
					SMC	
					W	
					Z	
					PC	
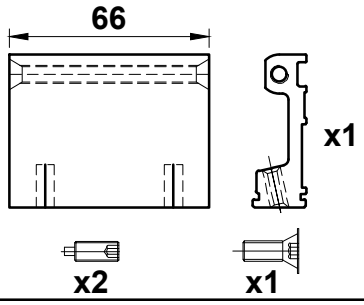	**ACIM122** Cleat for IMP122	24	Pack	IMP122	MF	✓
					SA	
					KL	
					HP	
					SSC	
					SMC	
					W	
					Z	
					PC	
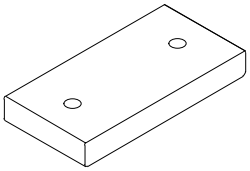	**ACIM123** Fixing Plate for Bottom Guide of Auto Sliding Door	10	Pack	IMP027 IMP028	MF	✓
					SA	
					KL	
					HP	
					SSC	
					SMC	
					W	
					Z	
					PC	

T-BARS
ACVG65=2.5mm
ACVG66=3.0mm
ACVL150=4.0mm

Screw (Grub)

MF	= Mill Finish	W	= White
SA	= Silver Anodised	Z	= Black
KL	= Basic Colour		
HP	= Special Colour		
SSC	= Smooth Satin Chrome		
SMC	= Smokey Chrome		
PC	= Polished Chrome		

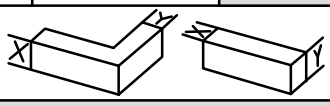

Image	Part Code	Pack	Unit	Application	Colour	
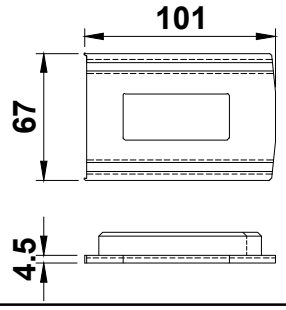	**ACIM125** **Bottom End Cap for IMP025**	**10**	**Pack**	**IMP025**	MF SA KL HP SSC SMC W Z PC	 ✓ ✓
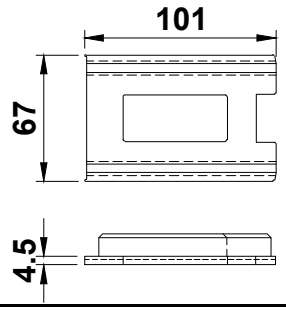	**ACIM126** **Bottom End Cap for IMP026**	**10**	**Pack**	**IMP026**	MF SA KL HP SSC SMC W Z PC	 ✓ ✓
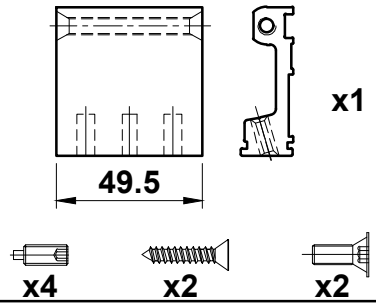	**ACIM127** **Cleat for IMP121**	**24**	**Pack**	**IMP127**	MF SA KL HP SSC SMC W Z PC	✓
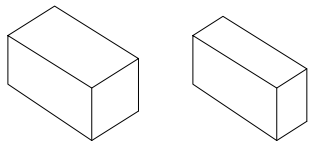	**ACIM130** **Foam Inserts**	**50**	**Pairs**	**IMP030** **IMP210** **IMP217** **IMP310** **IMP410**	MF SA KL HP SSC SMC W Z PC	✓
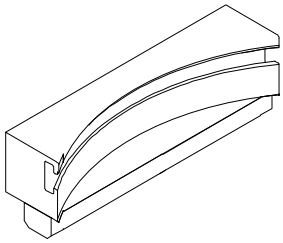	**ACIM140** **Woolpile Carrier for Rebated Anti-Finger Trap**	**1**	**Each**	**IMP263** **IMP269**	MF SA KL HP SSC SMC W Z PC	✓ ✓ ✓ ✓ ✓

T-BARS
ACVG65=2.5mm
ACVG66=3.0mm
ACVL150=4.0mm

Screw (Grub)

MF	**= Mill Finish**	**W**	**= White**
SA	**= Silver Anodised**	**Z**	**= Black**
KL	**= Basic Colour**		
HP	**= Special Colour**		
SSC	**= Smooth Satin Chrome**		
SMC	**= Smokey Chrome**		
PC	**= Polished Chrome**		

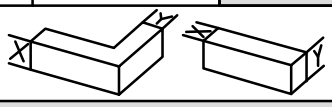

Image	Part Code	Pack	Unit	Application	Colour	
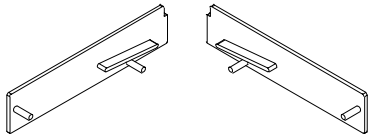	**ACIM157** **End Caps for IMP057**	**10**	**Pairs**	**IMP057**	MF	
					SA	
					KL	
					HP	
					SSC	
					SMC	
					W	✓
					Z	✓
					PC	
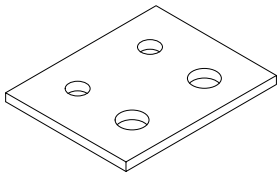	**ACIM210** **Closer Fixing Plate**	**1**	**Pair**	**IMP216**	MF	✓
					SA	
					KL	
					HP	
					SSC	
					SMC	
					W	
					Z	
					PC	
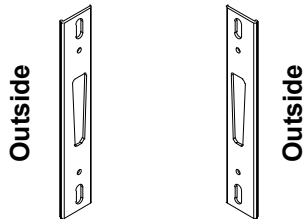 **Left Hand** **Right Hand**	**ACIM212LH/RH** **Keep for Single Door** 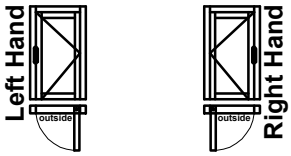	**1**	**each**	**IMP216**	MF	
					SA	✓
					KL	
					HP	
					SSC	
					SMC	
					W	
					Z	
					PC	
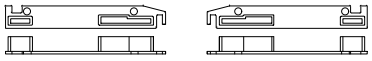	**ACIM263** **End Caps for IMP263**	**10**	**Pairs**	**IMP263**	MF	
					SA	
					KL	
					HP	
					SSC	
					SMC	
					W	
					Z	✓
					PC	
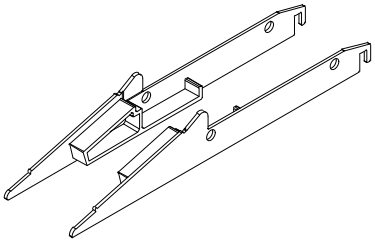	**ACIM264** **PVC End Caps**	**10**	**Pairs**	**IMP264**	MF	
					SA	
					KL	
					HP	
					SSC	
					SMC	
					W	
					Z	✓
					PC	

T-BARS
ACVG65=2.5mm
ACVG66=3.0mm
ACVL150=4.0mm

Screw (Grub)

MF = Mill Finish
SA = Silver Anodised
KL = Basic Colour
HP = Special Colour
SSC = Smooth Satin Chrome
SMC = Smokey Chrome
PC = Polished Chrome
W = White
Z = Black

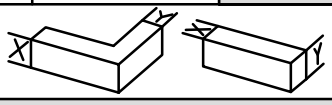

Image	Part Code	Pack	Unit	Application	Colour
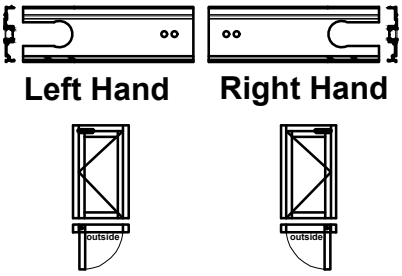	**ACIM269LH/RH** **Pre-Drilled Closer Plate to suit IMP269** **NB. Not Dual Colour**	**1**	**Each**	**IMP110 IMP269**	MF SA KL HP SSC SMC W ✓ Z ✓ PC
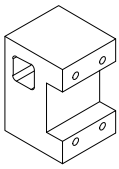	**ACIM270** **Support Block for Panic Hardware**	**1**	**Each**	**IMP110 IMP269**	MF ✓ SA KL HP SSC SMC W Z PC
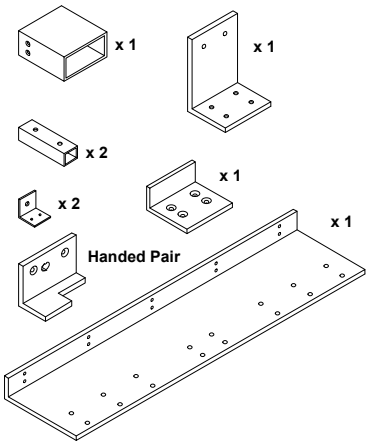	**ACIM271** **Double Door Autoslide Brackets Required for PAS24:2016**	**1**	**Pack**		MF SA KL HP SSC SMC W Z PC
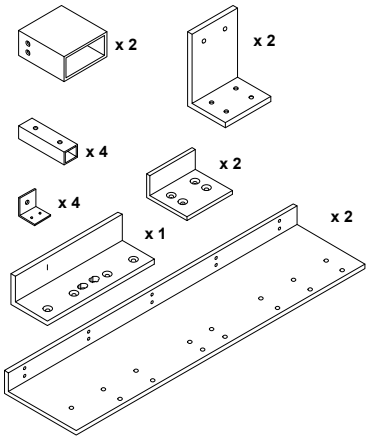	**ACIM272** **Single Door Autoslide Brackets Required for PAS24:2016**	**1**	**Pack**		MF SA KL HP SSC SMC W Z PC

T-BARS
ACVG65=2.5mm
ACVG66=3.0mm
ACVL150=4.0mm

Screw (Grub)

MF = Mill Finish
SA = Silver Anodised
KL = Basic Colour
HP = Special Colour
SSC = Smooth Satin Chrome
SMC = Smokey Chrome
PC = Polished Chrome
W = White
Z = Black

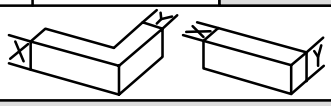

Image	Part Code	Pack	Unit	Application	Colour
	ACIM280 **Autoslide Fixing Kit** **Required for PAS24:2016**	**1**	**Pack**		MF SA KL HP SSC SMC W Z PC
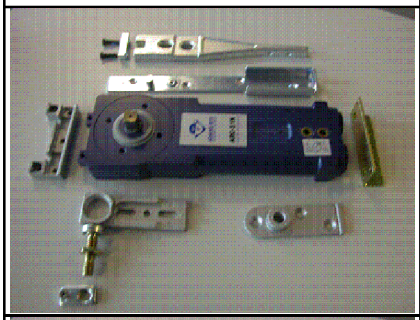	**ACIM423A** **Door Closer** **Not Hold Open - 750/950** **65mm End Load**	**1**	**Each**	**IMP110**	MF SA KL HP SSC SMC W Z PC
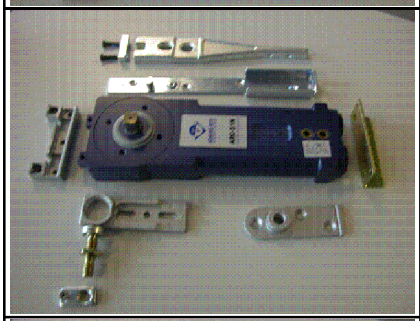	**ACIM423B** **Door Closer** **Hold Open - 750/950** **65mm End Load**	**1**	**Each**	**IMP110**	MF SA KL HP SSC SMC W Z PC
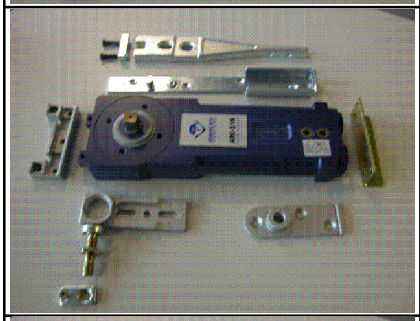	**ACIM424A** **Door Closer** **Not Hold Open - 950/1150** **65mm End Load**	**1**	**Each**	**IMP110**	MF SA KL HP SSC SMC W Z PC
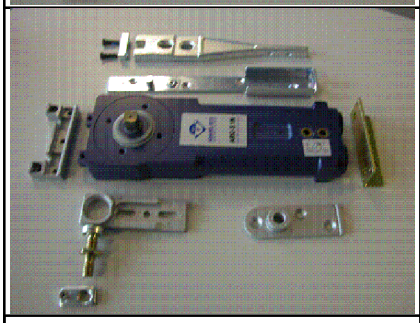	**ACIM424B** **Door Closer** **Hold Open - 950/1150** **65mm End Load**	**1**	**Each**	**IMP110**	MF SA KL HP SSC SMC W Z PC

T-BARS
ACVG65=2.5mm
ACVG66=3.0mm
ACVL150=4.0mm

Screw (Grub)

MF	**= Mill Finish**	**W**	**= White**
SA	**= Silver Anodised**	**Z**	**= Black**
KL	**= Basic Colour**		
HP	**= Special Colour**		
SSC	**= Smooth Satin Chrome**		
SMC	**= Smokey Chrome**		
PC	**= Polished Chrome**		

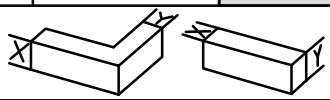

Image	Part Code	Pack	Unit	Application	Colour	
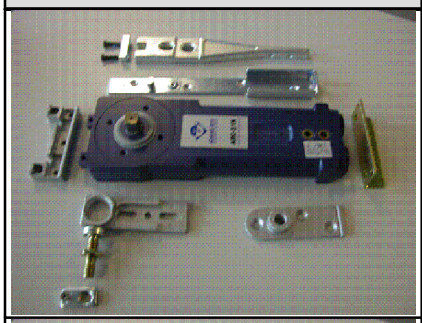	**ACIM425A** Door Closer Not Hold Open - <750 65mm End Load	1	Each	IMP110	MF SA KL HP SSC SMC W Z PC	
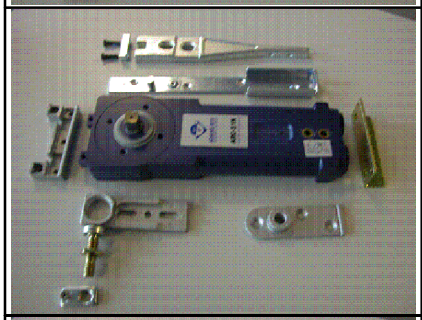	**ACIM425B** Door Closer Hold Open - <750 65mm End Load	1	Each	IMP110	MF SA KL HP SSC SMC W Z PC	
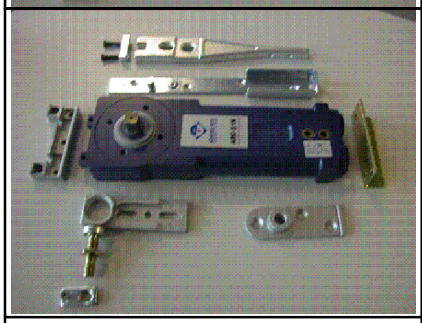	**ACIM426** Springless Door Closer	1	Each	IMP110	MF SA KL HP SSC SMC W Z PC	
	ACIM428 Face Mounted Door Closer (Item not stocked - check details with our Sales Department)	1	Each	IMP211	MF SA KL HP SSC SMC W Z PC	
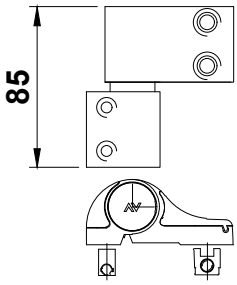	**ACIM429** 2 Part Flag Hinge	2	Pack	IMP211	MF ✓ SA ✓ KL HP SSC SMC W ✓ Z PC	

T-BARS
ACVG65=2.5mm
ACVG66=3.0mm
ACVL150=4.0mm

Screw (Grub)

MF	= Mill Finish	W	= White
SA	= Silver Anodised	Z	= Black
KL	= Basic Colour		
HP	= Special Colour		
SSC	= Smooth Satin Chrome		
SMC	= Smokey Chrome		
PC	= Polished Chrome		

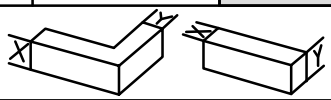

Image	Part Code	Pack	Unit	Application	Colour	
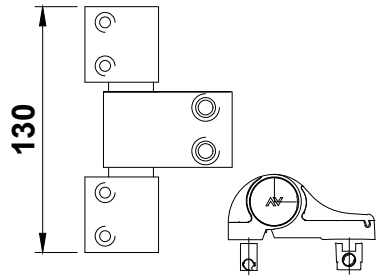	**ACIM430** **3 Part Flag Hinge**	**2**	**Pack**	**IMP211**	MF	✓
					SA	✓
					KL	
					HP	
					SSC	
					SMC	
					W	✓
					Z	
					PC	
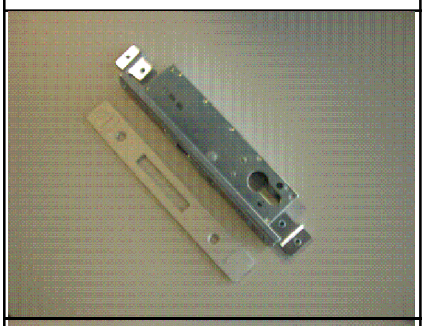	**ACIM440B** **Door Lock -** **30mm Back Set**	**1**	**Each**	**IMP039**	MF	✓
					SA	
					KL	
					HP	
					SSC	
					SMC	
					W	
					Z	
					PC	
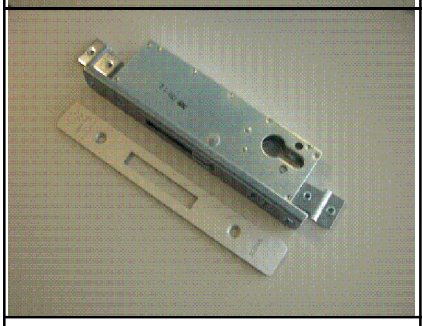	**ACIM440C** **Door Lock -** **40mm Back Set**	**1**	**Each**	**IMP039**	MF	✓
					SA	
					KL	
					HP	
					SSC	
					SMC	
					W	
					Z	
					PC	
	ACIM443 **High Security Cylinder Guard** **(Item not stocked - check details with our Sales Department)**	**1**	**Each**		MF	✓
					SA	
					KL	
					HP	
					SSC	
					SMC	
					W	
					Z	
					PC	✓
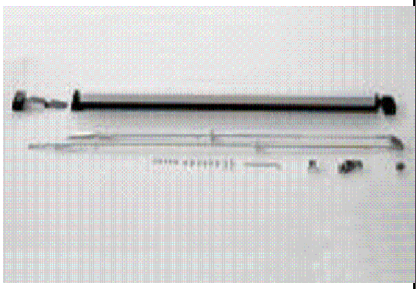	**ACIM452** **Concealed Panic Bar** **Max Door Width - 900mm** **Min Door Width - 705mm** **Max Height - 2500mm**	**1**	**Each**	**IMP041**	MF	
					SA	
					KL	
					HP	
					SSC	
					SMC	
					W	
					Z	
					PC	

T-BARS
ACVG65=2.5mm
ACVG66=3.0mm
ACVL150=4.0mm

Screw (Grub)

MF	**= Mill Finish**	**W**	**= White**
SA	**= Silver Anodised**	**Z**	**= Black**
KL	**= Basic Colour**		
HP	**= Special Colour**		
SSC	**= Smooth Satin Chrome**		
SMC	**= Smokey Chrome**		
PC	**= Polished Chrome**		

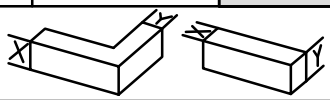

Image	Part Code	Pack	Unit	Application	Colour
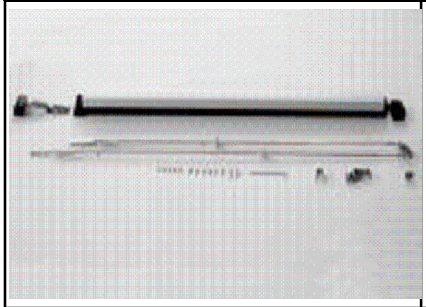	**ACIM453** **Concealed Panic Bar** **Max Door Width - 1050mm** **Min Door Width - 705mm** **Max Height - 2500mm**	**1**	**Each**	**IMP041**	MF SA KL HP SSC SMC W Z PC
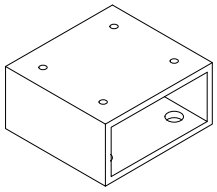	**ACIM510** **Reinforcing Section** **UTL080 cut at 75mm**	**1**	**Each**	**ACIM452** **ACIM453**	MF ✓ SA KL HP SSC SMC W Z PC
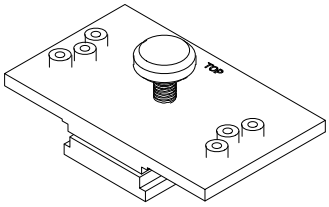	**ACIM900** **Drill Jig**	**1**	**Each**	**ACIM004** **IMP210**	MF ✓ SA KL HP SSC SMC W Z PC
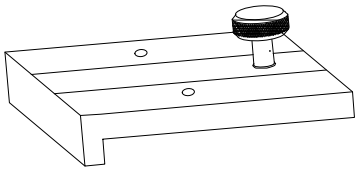	**ACIM901** **Drill Jig**	**1**	**Each**	**IMP027** **IMP028** **IMP034** **IMP120** **IMP121** **IMP122**	MF ✓ SA KL HP SSC SMC W Z PC
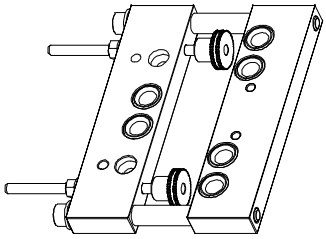	**ACIM905** **Drill Jig**	**1**	**Each**	**ACIM429** **ACIM430**	MF ✓ SA KL HP SSC SMC W Z PC

T-BARS
ACVG65=2.5mm
ACVG66=3.0mm
ACVL150=4.0mm

Screw (Grub)

MF	**= Mill Finish**	**W**	**= White**
SA	**= Silver Anodised**	**Z**	**= Black**
KL	**= Basic Colour**		
HP	**= Special Colour**		
SSC	**= Smooth Satin Chrome**		
SMC	**= Smokey Chrome**		
PC	**= Polished Chrome**		

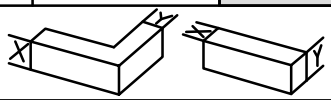

Image	Part Code	Pack	Unit	Application	Colour	
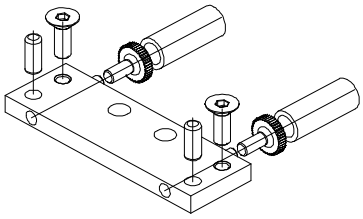	**ACIM906** **Drill Jig Adaptor**	1	Each	ACIM429 ACIM430	MF	✓
					SA	
					KL	
					HP	
					SSC	
					SMC	
					W	
					Z	
					PC	
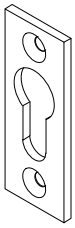	**ACMX108** **Escutcheon**	1	Each		MF	✓
					SA	✓
					KL	✓
					HP	✓
					SSC	
					SMC	
					W	✓
					Z	✓
					PC	
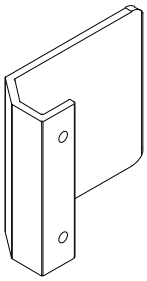	**ACMX05520** **100mm Pad Handle**	1	Each	ACIM030	MF	✓
					SA	✓
					KL	✓
					HP	✓
					SSC	
					SMC	
					W	✓
					Z	✓
					PC	
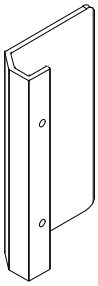	**ACMX05522** **200mm Pad Handle**	1	Each	ACIM030	MF	✓
					SA	✓
					KL	✓
					HP	✓
					SSC	
					SMC	
					W	✓
					Z	✓
					PC	
	ACRV032 **Infill Gasket**	50	m		MF	
					SA	
					KL	
					HP	
					SSC	
					SMC	
					W	
					Z	✓
					PC	

T-BARS
ACVG65=2.5mm
ACVG66=3.0mm
ACVL150=4.0mm

Screw (Grub)

MF = Mill Finish
SA = Silver Anodised
KL = Basic Colour
HP = Special Colour
SSC = Smooth Satin Chrome
SMC = Smokey Chrome
PC = Polished Chrome
W = White
Z = Black

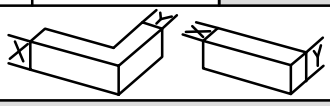

Image	Part Code	Pack	Unit	Application	Colour	
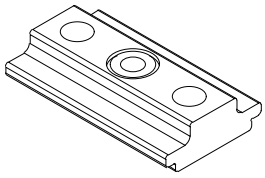	**ACDV523** **M4 Fixing Plate**	**50**	**pack**	**ACDV265** **ACVL426**	MF SA KL HP SSC SMC W Z PC	✓
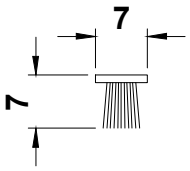	**ACSH032** **7 x 7mm Woolpile (Grey)**	**200**	**m**	**IMP038**	MF SA KL HP SSC SMC W Z PC	
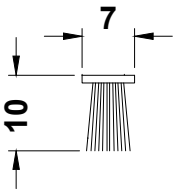	**ACSH035** **7 x 10mm Woolpile (Grey)**	**200**	**m**	**IMP027** **IMP039**	MF SA KL HP SSC SMC W Z PC	
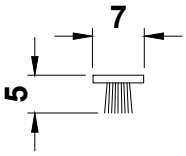	**ACSH037** **7 x 5mm Woolpile (Grey)**	**425**	**m**		MF SA KL HP SSC SMC W Z PC	
	ACSH446 **Cylinder guard for euro cylinders.**	**1**	**Each**		MF SA KL HP SSC SMC W Z PC	✓

T-BARS
ACVG65=2.5mm
ACVG66=3.0mm
ACVL150=4.0mm

Screw (Grub)

MF = Mill Finish
SA = Silver Anodised
KL = Basic Colour
HP = Special Colour
SSC = Smooth Satin Chrome
SMC = Smokey Chrome
PC = Polished Chrome
W = White
Z = Black

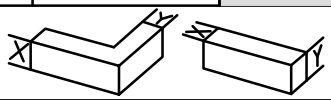

Image	Part Code	Pack	Unit	Application	Colour	PC
	ACSH470 **Letter Plate** **Outer Dimensions -** **310mm x 50mm**	**1**	**Each**		MF	✓
					SA	✓
					KL	
					HP	
					SSC	
					SMC	
					W	✓
					Z	✓
					PC	
	ACSH471 **Letter Plate** **Outer Dimensions -** **250mm x 65mm**	**1**	**Each**		MF	✓
					SA	✓
					KL	
					HP	
					SSC	
					SMC	
					W	✓
					Z	✓
					PC	
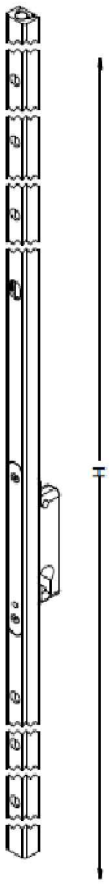	**BT Lock** **(Cylinder operated)**			**IMP042** **IMP043**	MF	
					SA	
					KL	
					HP	
					SSC	
					SMC	
					W	
					Z	
					PC	

Lock	Sash height	Pack	Unit
ACSZ040	**≤2366 mm.**	**1**	**Each**
ACSZ041	**≤2700 mm.**	**1**	**Each**
ACSZ042	**≤3100 mm.**	**1**	**Each**

Only to lock into outerframe

T-BARS
ACVG65=2.5mm
ACVG66=3.0mm
ACVL150=4.0mm

Screw (Grub)

MF = Mill Finish
SA = Silver Anodised
KL = Basic Colour
HP = Special Colour
SSC = Smooth Satin Chrome
SMC = Smokey Chrome
PC = Polished Chrome
W = White
Z = Black

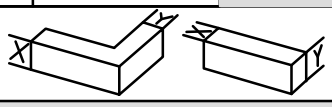

Image	Part Code	Pack	Unit	Application	Colour	
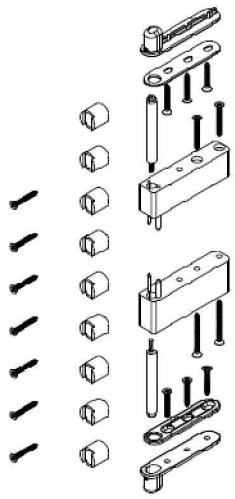	**ACSZ049** **Fixing kit and keeps for ACSZ040 to ACSZ042.**	**1**	**Pack**	**ACSZ040 ACSZ041 ACSZ042**	MF SA KL HP SSC SMC W Z PC	
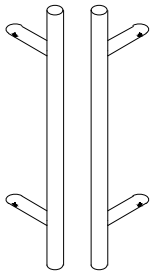	**ACSM020SS** **Stainless Steel 600mm Pull Bar Handle**	**1**	**Pair**		MF SA KL HP SSC SMC W Z PC	
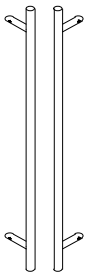	**ACSM021SS** **Stainless Steel 1200mm Pull Bar Handle**	**1**	**Pair**		MF SA KL HP SSC SMC W Z PC	
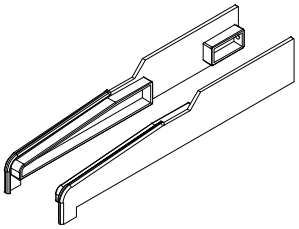	**ACUN3040** **Cast End Cap for UN3040**	**10**	**Pack**	**UN3040**	MF ✓ SA ✓ KL ✓ HP ✓ SSC SMC W ✓ Z ✓ PC	

T-BARS
ACVG65=2.5mm
ACVG66=3.0mm
ACVL150=4.0mm

Screw (Grub)

MF = Mill Finish
SA = Silver Anodised
KL = Basic Colour
HP = Special Colour
SSC = Smooth Satin Chrome
SMC = Smokey Chrome
PC = Polished Chrome
W = White
Z = Black

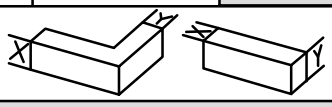

Image	Part Code	Pack	Unit	Application	Colour	
	ACVG31 **3mm External Gasket**	**200**	**m**		MF	
					SA	
					KL	
					HP	
					SSC	
					SMC	
					W	
					Z	✓
					PC	
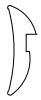	**ACVG32** **3mm Wedge Gasket**	**100**	**m**		MF	
					SA	
					KL	
					HP	
					SSC	
					SMC	
					W	
					Z	✓
					PC	
	ACVG33 **4mm Wedge Gasket**	**100**	**m**		MF	
					SA	
					KL	
					HP	
					SSC	
					SMC	
					W	
					Z	✓
					PC	
	ACVG34 **5mm Wedge Gasket**	**100**	**m**		MF	
					SA	
					KL	
					HP	
					SSC	
					SMC	
					W	
					Z	✓
					PC	
	ACVG131 **4mm External Gasket**	**100**	**m**		MF	
					SA	
					KL	
					HP	
					SSC	
					SMC	
					W	
					Z	
					PC	

T-BARS
ACVG65=2.5mm
ACVG66=3.0mm
ACVL150=4.0mm

Screw (Grub)

MF = Mill Finish
SA = Silver Anodised
KL = Basic Colour
HP = Special Colour
SSC = Smooth Satin Chrome
SMC = Smokey Chrome
PC = Polished Chrome
W = White
Z = Black

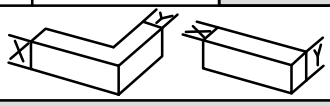

Image	Part Code	Pack	Unit	Application	Colour	✓
	ACVG231 **2mm External Gasket**	**200**	**m**		MF	
					SA	
					KL	
					HP	
					SSC	
					SMC	
					W	
					Z	✓
					PC	
	ACVG340 **6mm Wedge Gasket**	**200**	**m**		MF	
					SA	
					KL	
					HP	
					SSC	
					SMC	
					W	
					Z	✓
					PC	
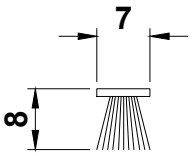	**ACVL033** **7 x 8mm Woolpile (Grey)**	**50**	**m**	**IMP011** **IMP035**	MF	
					SA	
					KL	
					HP	
					SSC	
					SMC	
					W	
					Z	
					PC	
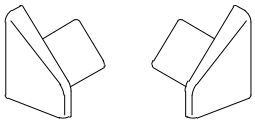	**ACVL059** **End Caps**	**1**	**Pair**	**VL72**	MF	
					SA	
					KL	
					HP	
					SSC	
					SMC	
					W	✓
					Z	✓
					PC	
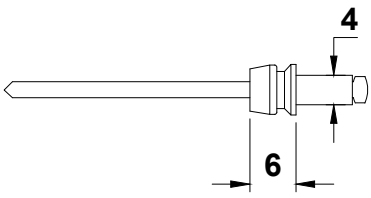	**ACVL061** **Rivet to secure VL72**	**100**	**Pack**	**VL72**	MF	✓
					SA	
					KL	
					HP	
					SSC	
					SMC	
					W	
					Z	
					PC	

T-BARS
ACVG65=2.5mm
ACVG66=3.0mm
ACVL150=4.0mm

Screw (Grub)

MF = Mill Finish
SA = Silver Anodised
KL = Basic Colour
HP = Special Colour
SSC = Smooth Satin Chrome
SMC = Smokey Chrome
PC = Polished Chrome
W = White
Z = Black

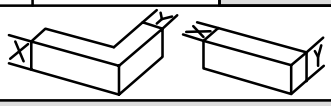

Image	Part Code	Pack	Unit	Application	Colour	
	ACVL122 **Door Handle -** **230mm x 30mm dia.** **Nylon Coated**	**1**	**Each**		MF	
					SA	
					KL	
					HP	
					SSC	
					SMC	
					W	✓
					Z	✓
					PC	
	ACVL123 **Door Handle -** **350mm x 35mm dia.** **Nylon Coated**	**1**	**Each**		MF	
					SA	
					KL	
					HP	
					SSC	
					SMC	
					W	✓
					Z	✓
					PC	
	ACVL127 **Shootbolts**	**1**	**Each**	**ACIM033** **ACVL426** **IMP026** **IMP040** **IMP041**	MF	
					SA	
					KL	
					HP	
					SSC	
					SMC	
					W	
					Z	
					PC	
	ACVL142 **Single Handle Fixation Kit**	**1**	**Each**	**ACVL122** **ACVL123**	MF	✓
					SA	
					KL	
					HP	
					SSC	
					SMC	
					W	
					Z	
					PC	
	ACVL143 **Back to Back Handle Fixings** **Not visible after installation**	**1**	**Each**	**ACVL122** **ACVL123**	MF	✓
					SA	
					KL	
					HP	
					SSC	
					SMC	
					W	
					Z	
					PC	

T-BARS
ACVG65=2.5mm
ACVG66=3.0mm
ACVL150=4.0mm

Screw (Grub)

MF	**= Mill Finish**	**W**	**= White**
SA	**= Silver Anodised**	**Z**	**= Black**
KL	**= Basic Colour**		
HP	**= Special Colour**		
SSC	**= Smooth Satin Chrome**		
SMC	**= Smokey Chrome**		
PC	**= Polished Chrome**		

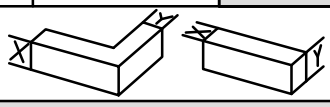

Image	Part Code	Pack	Unit	Application	Colour
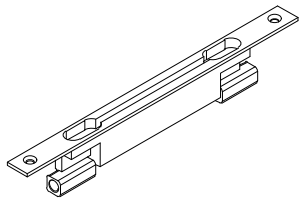	**ACVL426** **Shoot Bolt**	**1**	**Each**	**ACIM033** **ACVL127** **IMP026** **IMP040** **IMP041**	MF ✓ SA KL HP SSC SMC W Z PC
	ACVL432 **Finger Bolt** **(Not included in PAS24)**	**1**	**Each**	**ACIM016** **IMP026** **IMP038** **IMP040** **IMP041**	MF ✓ SA KL HP SSC SMC W Z PC
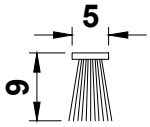	**ACVS033B** **5 x 9mm Woolpile (Black)**	**50**	**m**	**IMP039** **IMP260** **IMP261** **IMP262**	MF ✓ SA KL HP SSC SMC W Z PC
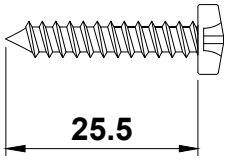	**PUA028** **No.10 x 25.5mm** **PH Stainless Steel** **Self Tapping Screw**	**100**	**Pack**		MF ✓ SA KL HP SSC SMC W Z PC
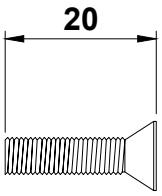	**WCA134** **M5 x 20mm** **Stainless Steel CSK Screw**	**100**	**Pack**		MF ✓ SA KL HP SSC SMC W Z PC

T-BARS
ACVG65=2.5mm
ACVG66=3.0mm
ACVL150=4.0mm

Screw (Grub)

MF = Mill Finish
SA = Silver Anodised
KL = Basic Colour
HP = Special Colour
SSC = Smooth Satin Chrome
SMC = Smokey Chrome
PC = Polished Chrome
W = White
Z = Black

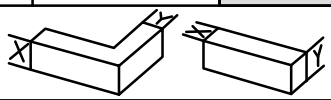

STANDARD ACCESSORIES

Image	Part Code	Pack	Unit	Application	Colour
	ACMX09700 **Alu-Polish** **Cleaning emulsion for aluminium oxide.**	**1**	**each**		MF ✓ SA KL HP SSC SMC W Z PC
	ACMX09761 **Maxi Gloss** **Protection for painted and anodised surfaces.**	**1**	**each**		MF SA KL HP SSC SMC W Z PC
	ACMX09762 **Alu. Bright** **Cleaner for rough, anodised or enamelled aluminium frames.**	**1**	**each**		MF SA KL HP SSC SMC W Z PC
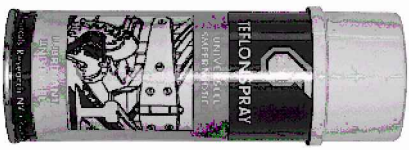	**ACMX09763** **Teflon Spray** **Lubricant**	**1**	**each**		MF SA KL HP SSC SMC W Z PC
	ACMX09764 **Maxi Cleaner** **For cleaning oily surfaces.**	**1**	**each**		MF SA KL HP SSC SMC W Z PC

T-BARS
ACVG65=2.5mm
ACVG66=3.0mm
ACVL150=4.0mm

Screw (Grub)

MF	**= Mill Finish**	**W**	**= White**
SA	**= Silver Anodised**	**Z**	**= Black**
KL	**= Basic Colour**		
HP	**= Special Colour**		
SSC	**= Smooth Satin Chrome**		
SMC	**= Smokey Chrome**		
PC	**= Polished Chrome**		

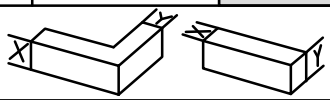

Image	Part Code	Pack	Unit	Application	Colour
	ACMX09765 **Glue Cleaner** **De-grease and silicone remover.**	**1**	**each**		MF SA KL HP SSC SMC W Z PC
	ACMX09770 **Roll & Wrap 100mm**	**1**	**each**		MF SA KL HP SSC SMC W Z PC
	ACMX09775 **Grip Handwrap**	**1**	**each**		MF SA KL HP SSC SMC W Z PC
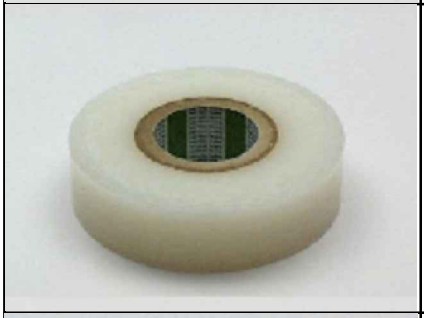	**ACMX09801** **Protective Tape 50mm**	**1**	**each**		MF SA KL HP SSC SMC W Z PC
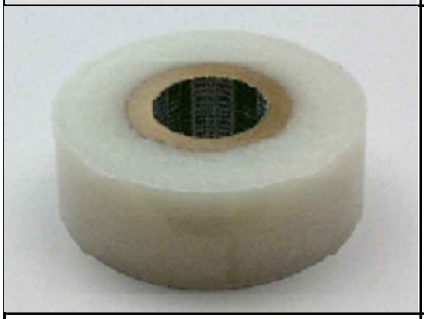	**ACMX09802** **Protective Tape 70mm**	**1**	**each**		MF SA KL HP SSC SMC W Z PC

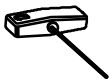

T-BARS
ACVG65=2.5mm
ACVG66=3.0mm
ACVL150=4.0mm

Screw (Grub)

MF = Mill Finish
SA = Silver Anodised
KL = Basic Colour
HP = Special Colour
SSC = Smooth Satin Chrome
SMC = Smokey Chrome
PC = Polished Chrome
W = White
Z = Black

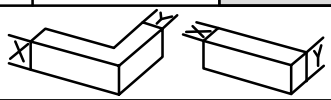

Image	Part Code	Pack	Unit	Application	Colour	
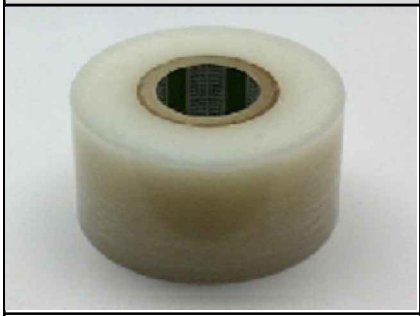	**ACMX09803** **Protective Tape 100mm**	**1**	**each**		MF	
					SA	
					KL	
					HP	
					SSC	
					SMC	
					W	
					Z	
					PC	
	ACSIL05 **Rubber Sealant**	**1**	**each**		MF	
					SA	
					KL	
					HP	
					SSC	
					SMC	
					W	
					Z	
					PC	
	ACSIL04 **Sealing Glue** **Order with suffix of KL colour (eg.ACSIL04KL005) or BL=Black/WP=White/ CL=Clear**	**1**	**each**		MF	
					SA	
					KL	✓
					HP	
					SSC	
					SMC	
					W	✓
					Z	✓
					PC	
	ACSIL08 **Silicone Gun**	**1**	**each**		MF	
					SA	
					KL	
					HP	
					SSC	
					SMC	
					W	
					Z	
					PC	
	ACSIL013 **Glue for Mitre**	**1**	**each**		MF	
					SA	
					KL	
					HP	
					SSC	
					SMC	
					W	
					Z	
					PC	

T-BARS
ACVG65=2.5mm
ACVG66=3.0mm
ACVL150=4.0mm

Screw (Grub)

MF = Mill Finish
SA = Silver Anodised
KL = Basic Colour
HP = Special Colour
SSC = Smooth Satin Chrome
SMC = Smokey Chrome
PC = Polished Chrome
W = White
Z = Black

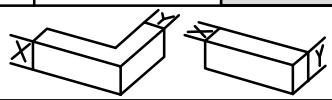

STANDARD ACCESSORIES

Image	Part Code	Pack	Unit	Application	Colour	
	ACSIL014 Anti-Corrosion Coating	1	each		MF	✓
					SA	
					KL	
					HP	
					SSC	
					SMC	
					W	
					Z	
					PC	
	ACUN3900 Gasket Roller	1	Each	Wedge Gaskets	MF	
					SA	
					KL	
					HP	
					SSC	
					SMC	
					W	
					Z	
					PC	
					MF	
					SA	
					KL	
					HP	
					SSC	
					SMC	
					W	
					Z	
					PC	
					MF	
					SA	
					KL	
					HP	
					SSC	
					SMC	
					W	
					Z	
					PC	
					MF	
					SA	
					KL	
					HP	
					SSC	
					SMC	
					W	
					Z	
					PC	

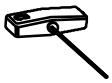

T-BARS
ACVG65=2.5mm
ACVG66=3.0mm
ACVL150=4.0mm

Screw (Grub)

MF	= Mill Finish	W	= White
SA	= Silver Anodised	Z	= Black
KL	= Basic Colour		
HP	= Special Colour		
SSC	= Smooth Satin Chrome		
SMC	= Smokey Chrome		
PC	= Polished Chrome		

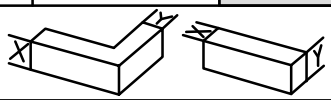

This page is intentionally left blank

This page is intentionally left blank

Section C

Sections

Scale Elevations

Smart Wall

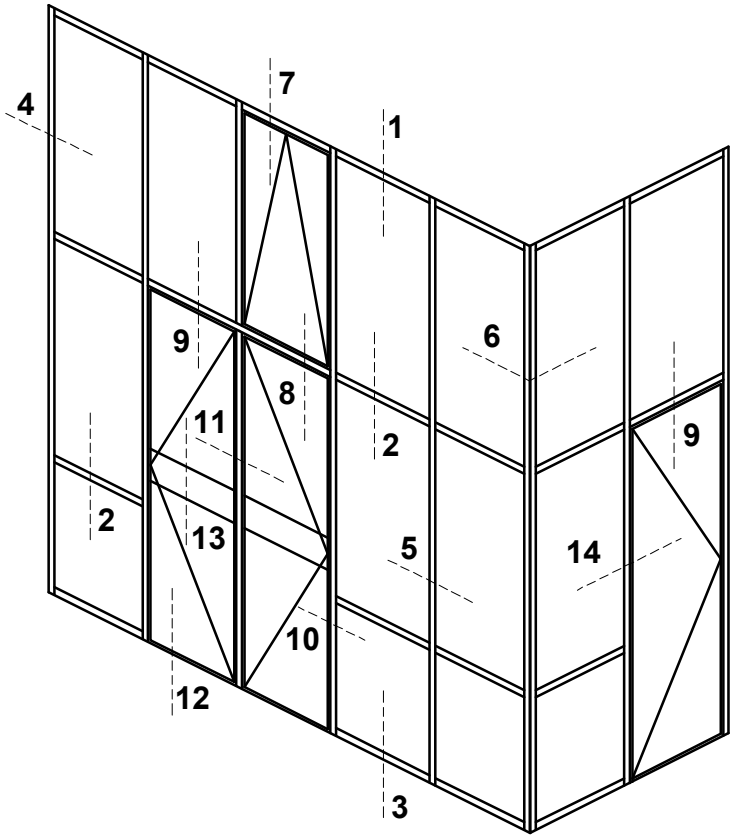

Do Not Scale From This Drawing

Smart Wall

Detail 1A

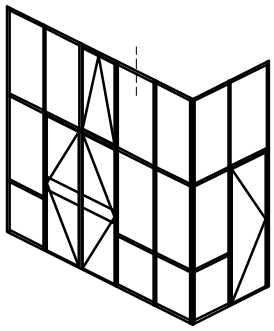

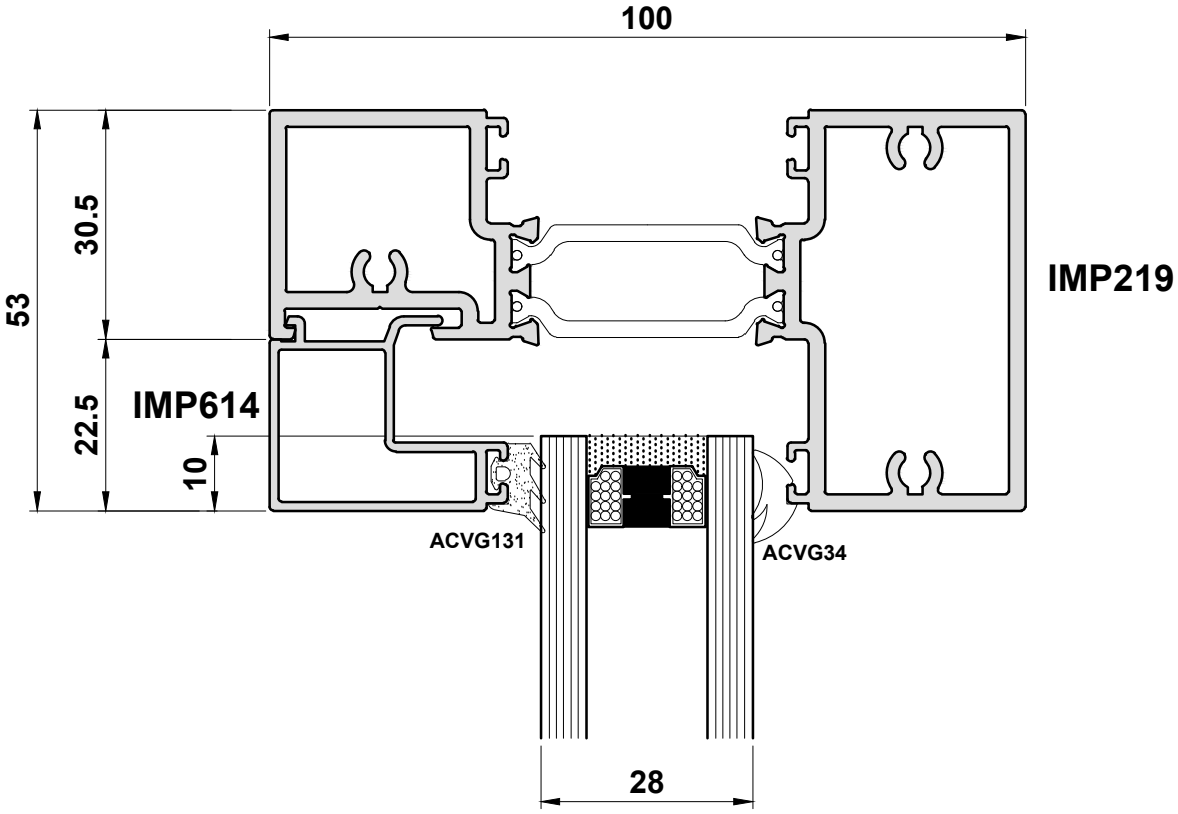

Do Not Scale From This Drawing

Detail 1B

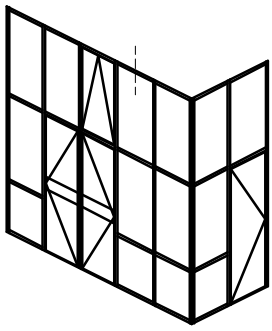

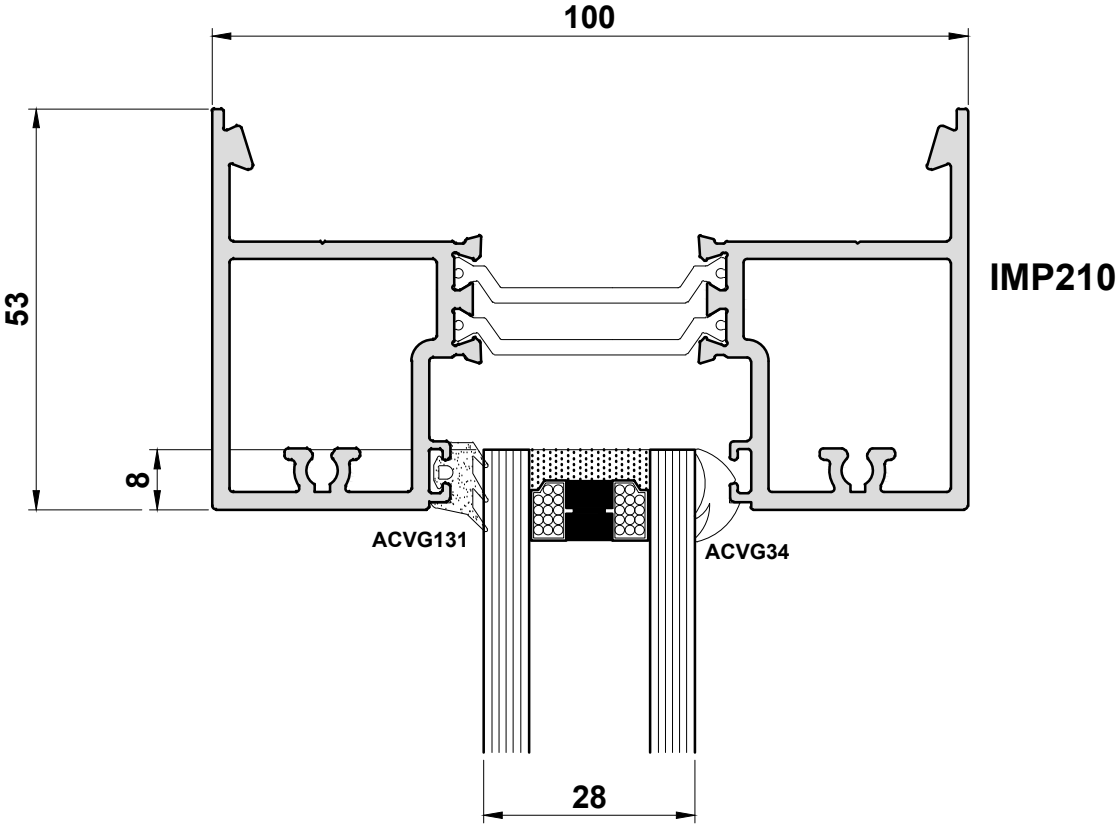

Do Not Scale From This Drawing

Detail 2A

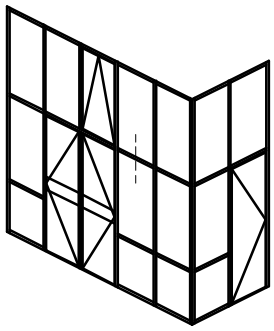

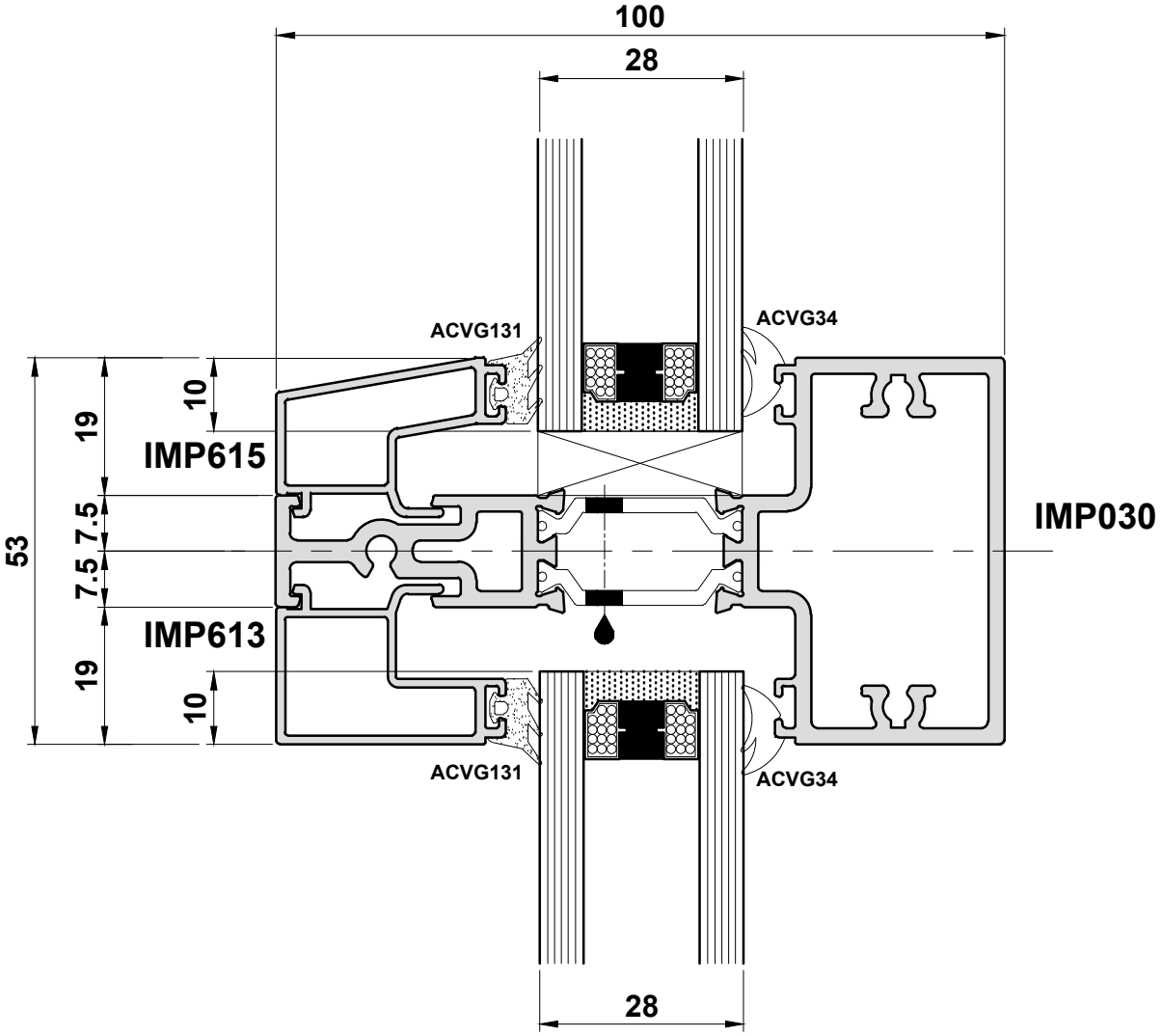

Consider zone drainage for exposed locations or screens above 2400mm

Do Not Scale From This Drawing

Detail 2B

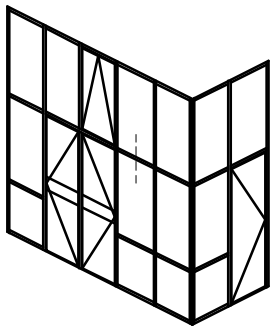

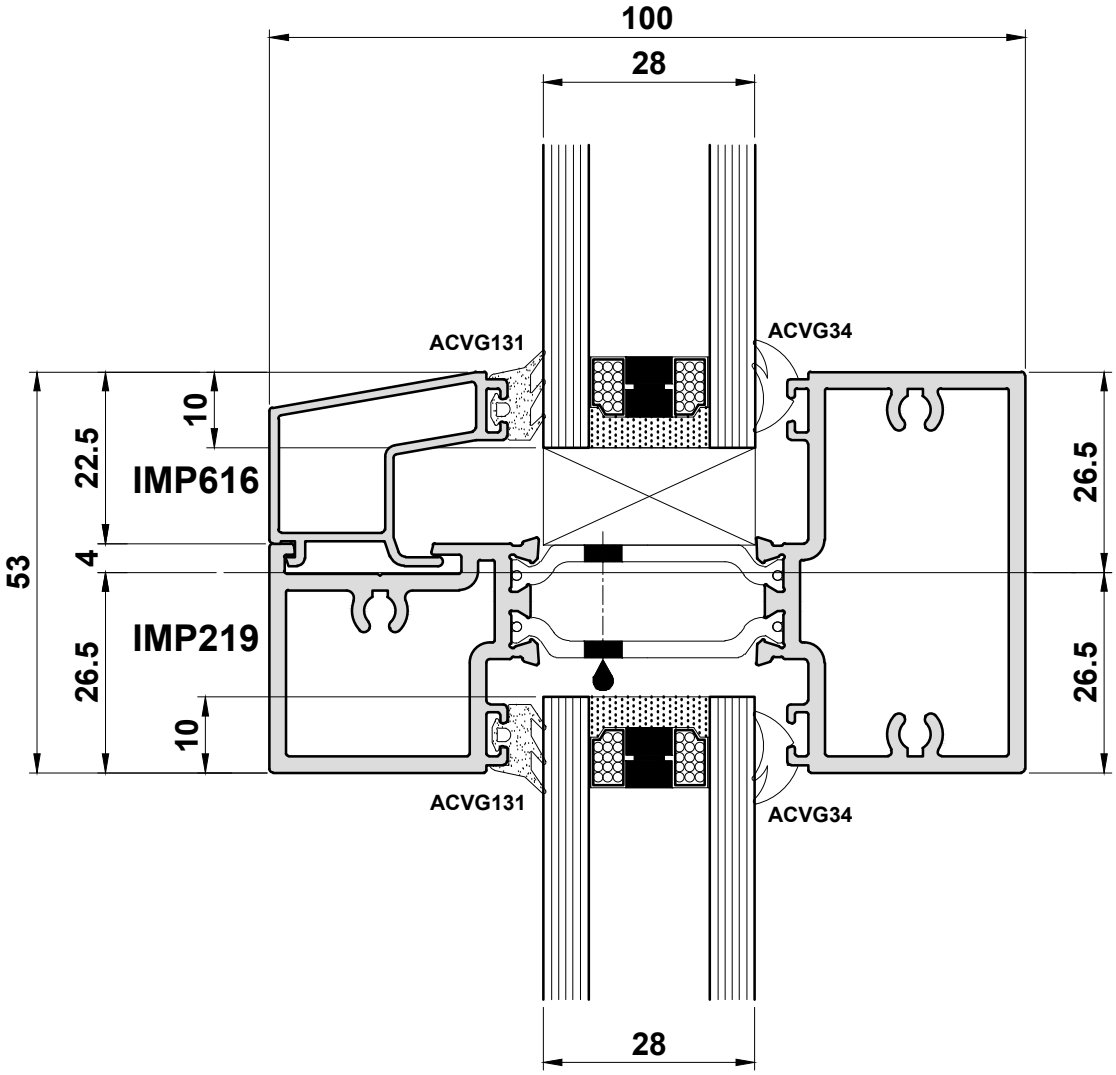

Consider zone drainage for exposed locations or screens above 2400mm

Do Not Scale From This Drawing

Detail 2C

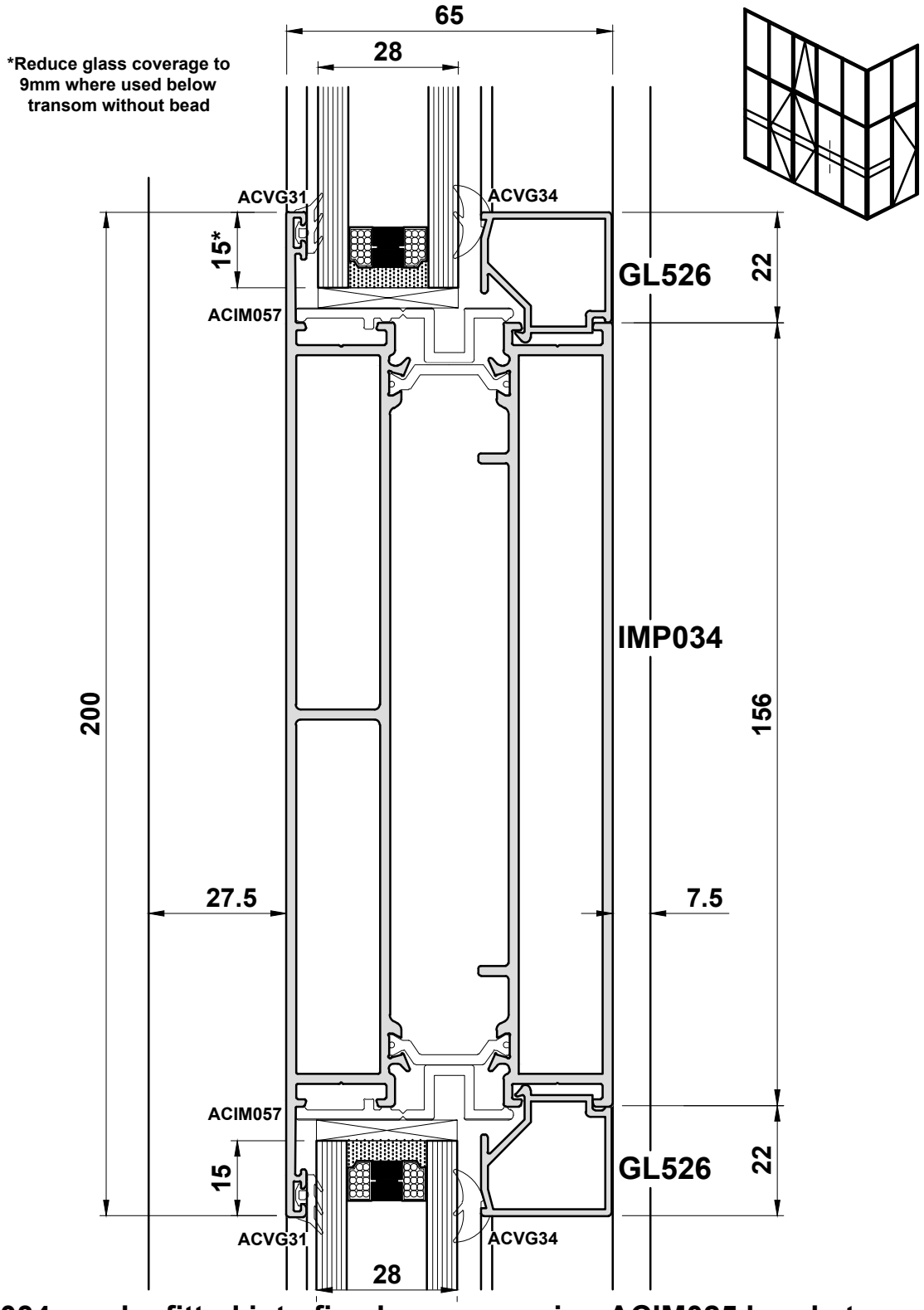

IMP034 can be fitted into fixed screens using ACIM025 brackets

Do Not Scale From This Drawing

Detail 3A

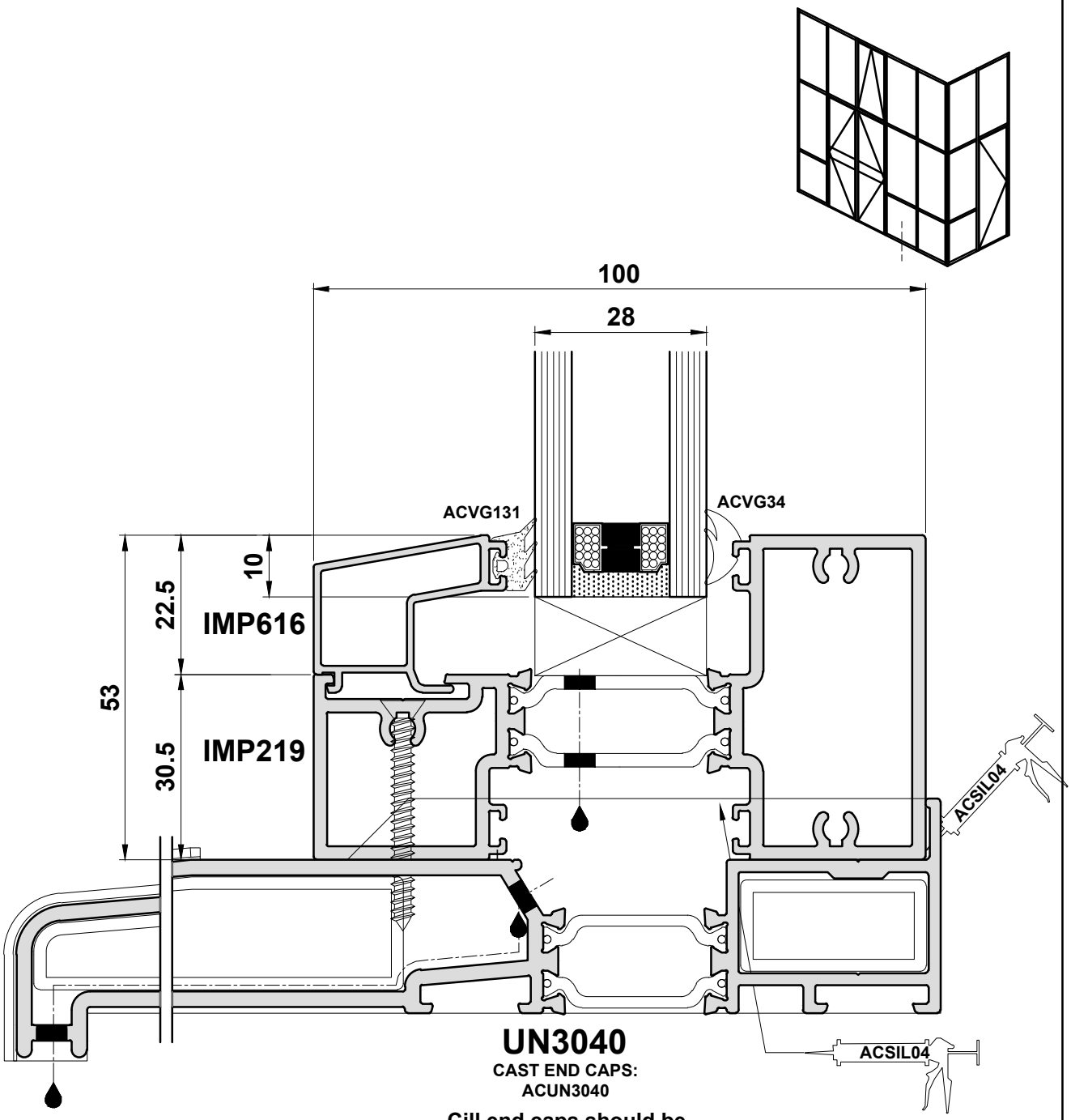

UN3040
CAST END CAPS:
ACUN3040

Cill end caps should be sealed to cill to prevent water egress over edge

Do Not Scale From This Drawing

Detail 3B

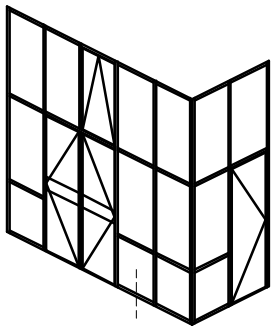

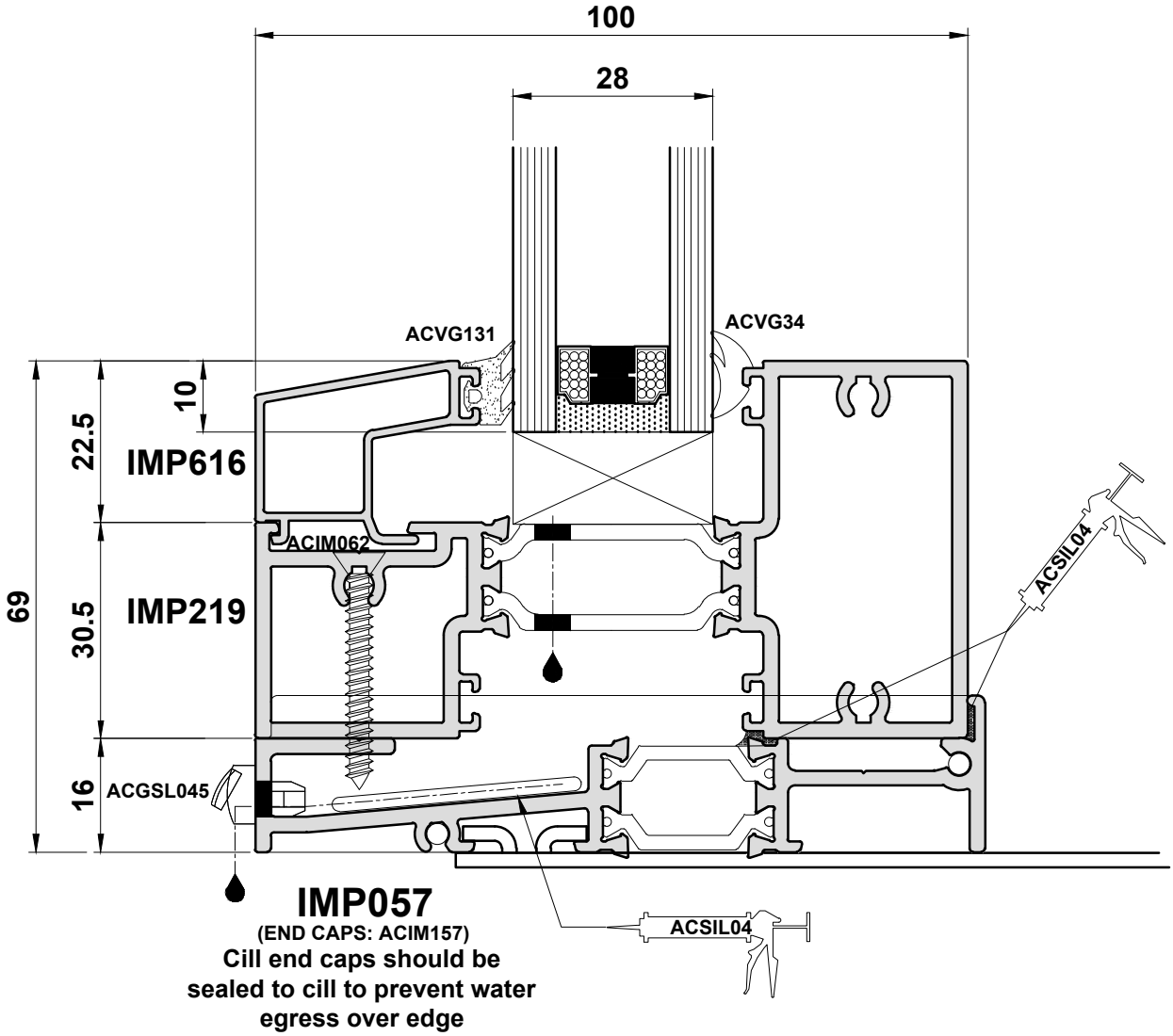

Do Not Scale From This Drawing

Smart Wall

Detail 4

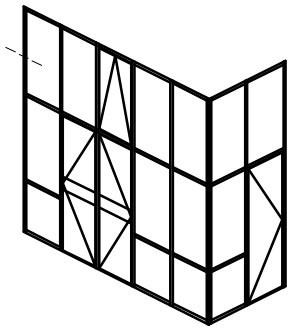

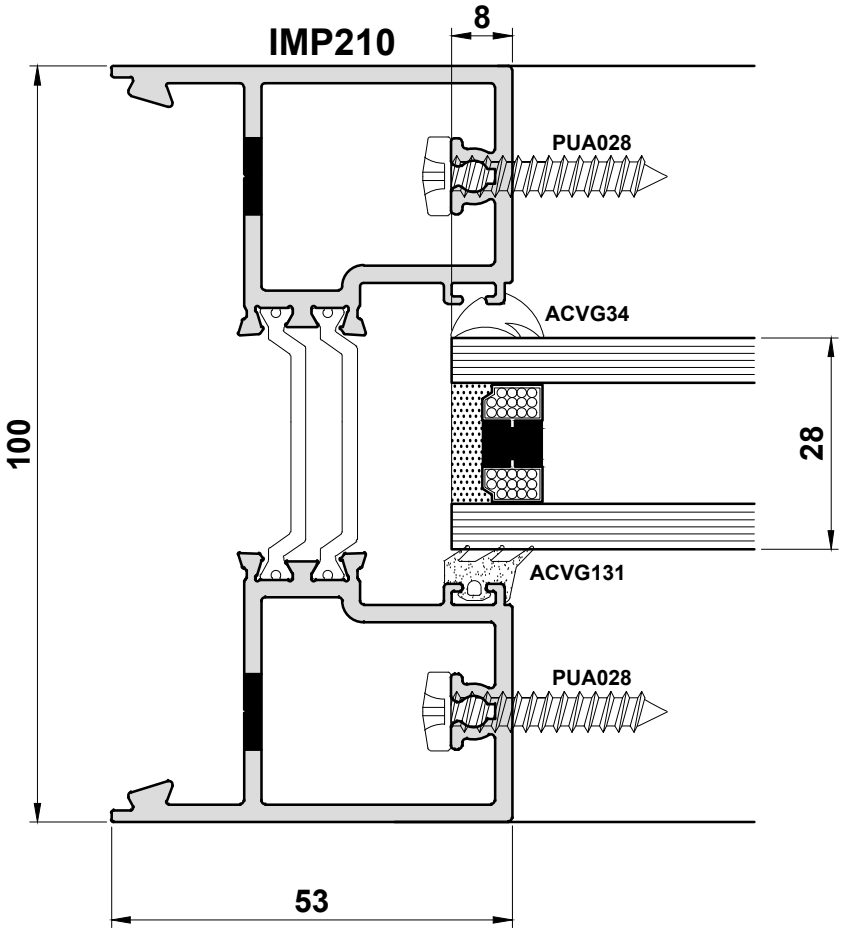

Do Not Scale From This Drawing

Detail 5A

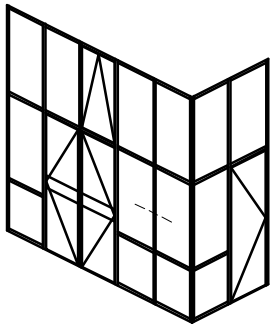

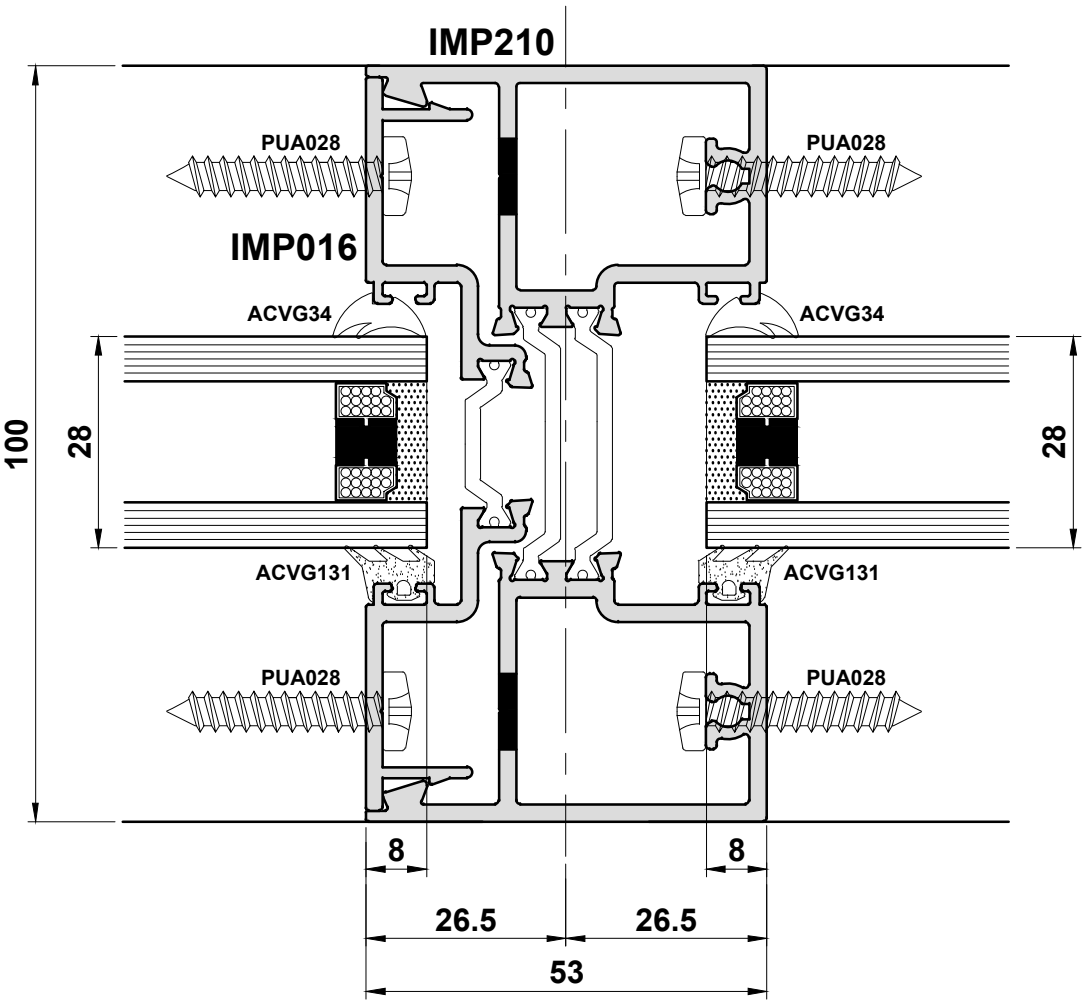

Do Not Scale From This Drawing

Detail 5B

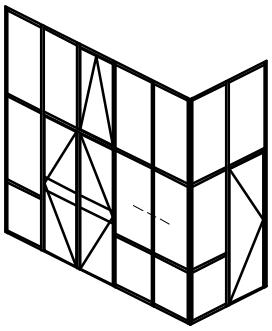

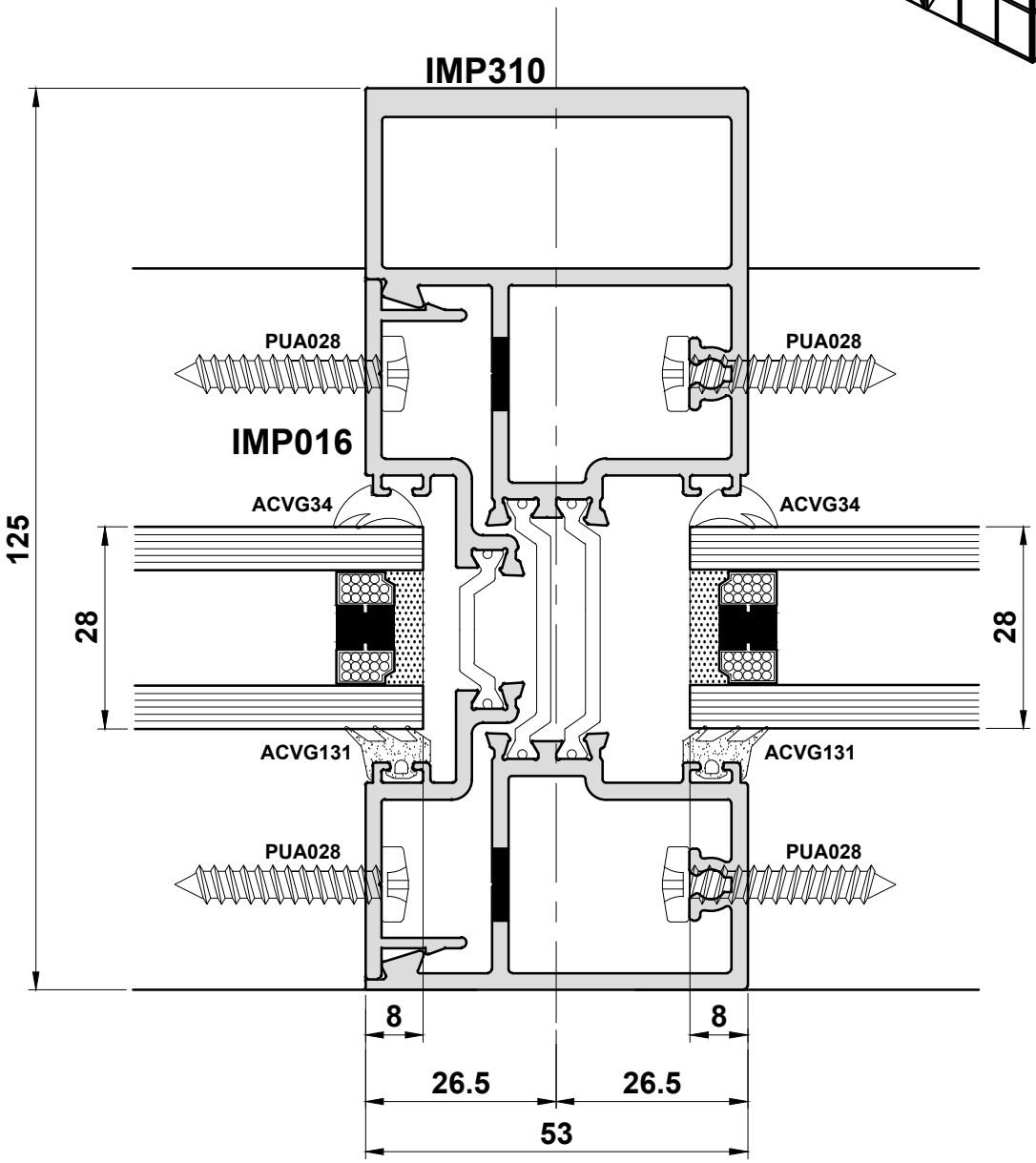

Do Not Scale From This Drawing

Detail 5C

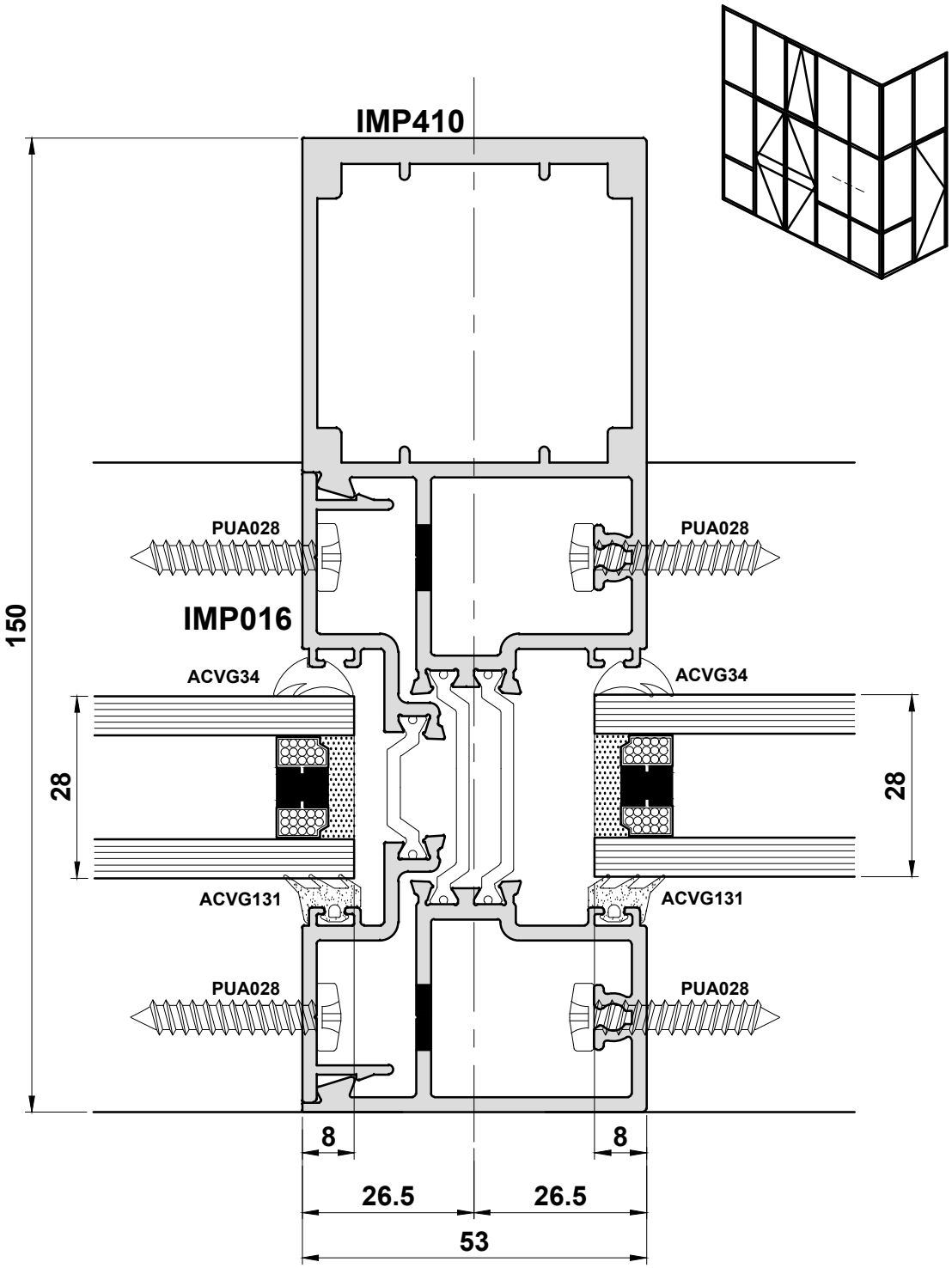

Do Not Scale From This Drawing

Detail 6A

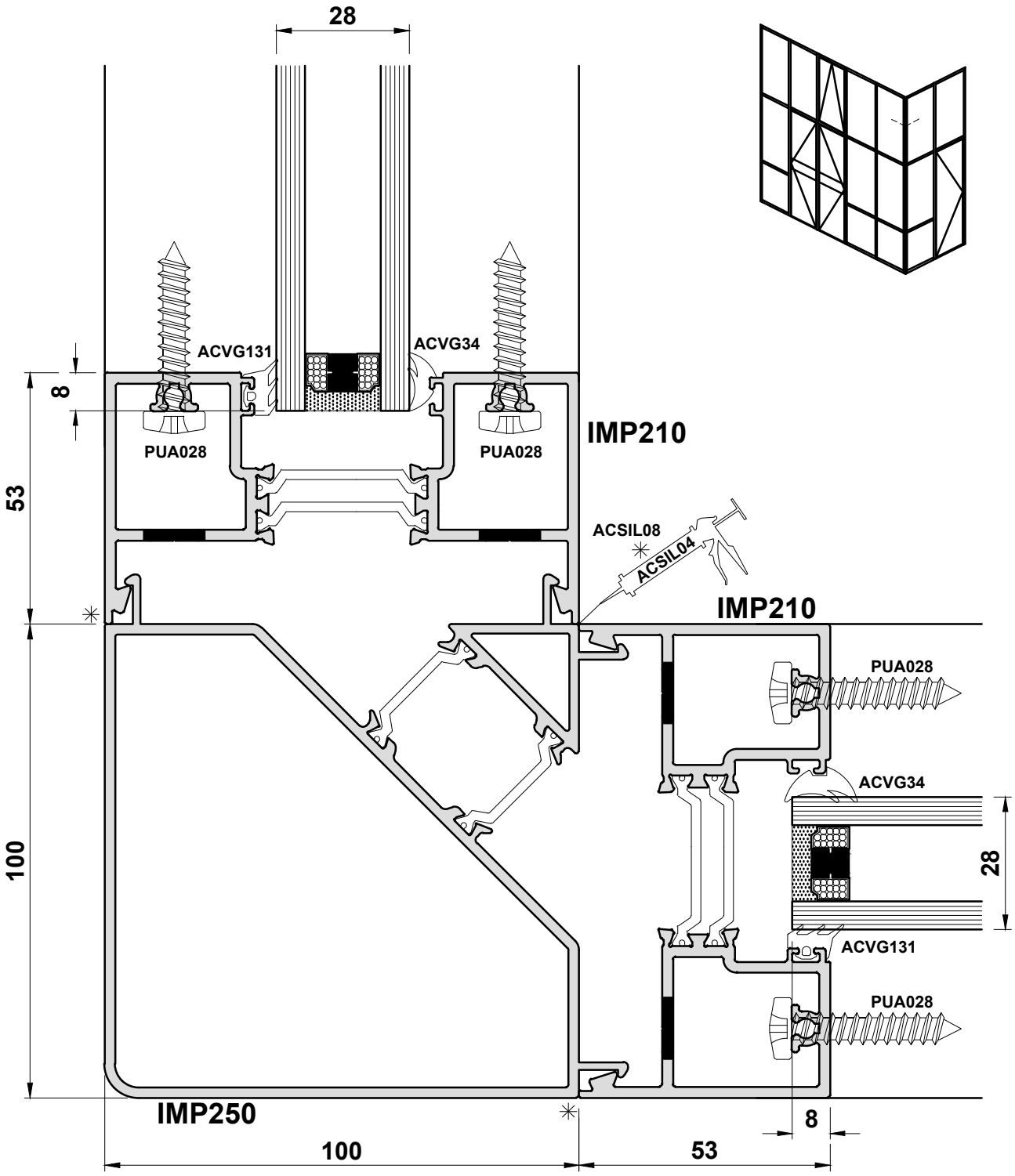

Do Not Scale From This Drawing

Detail 6B

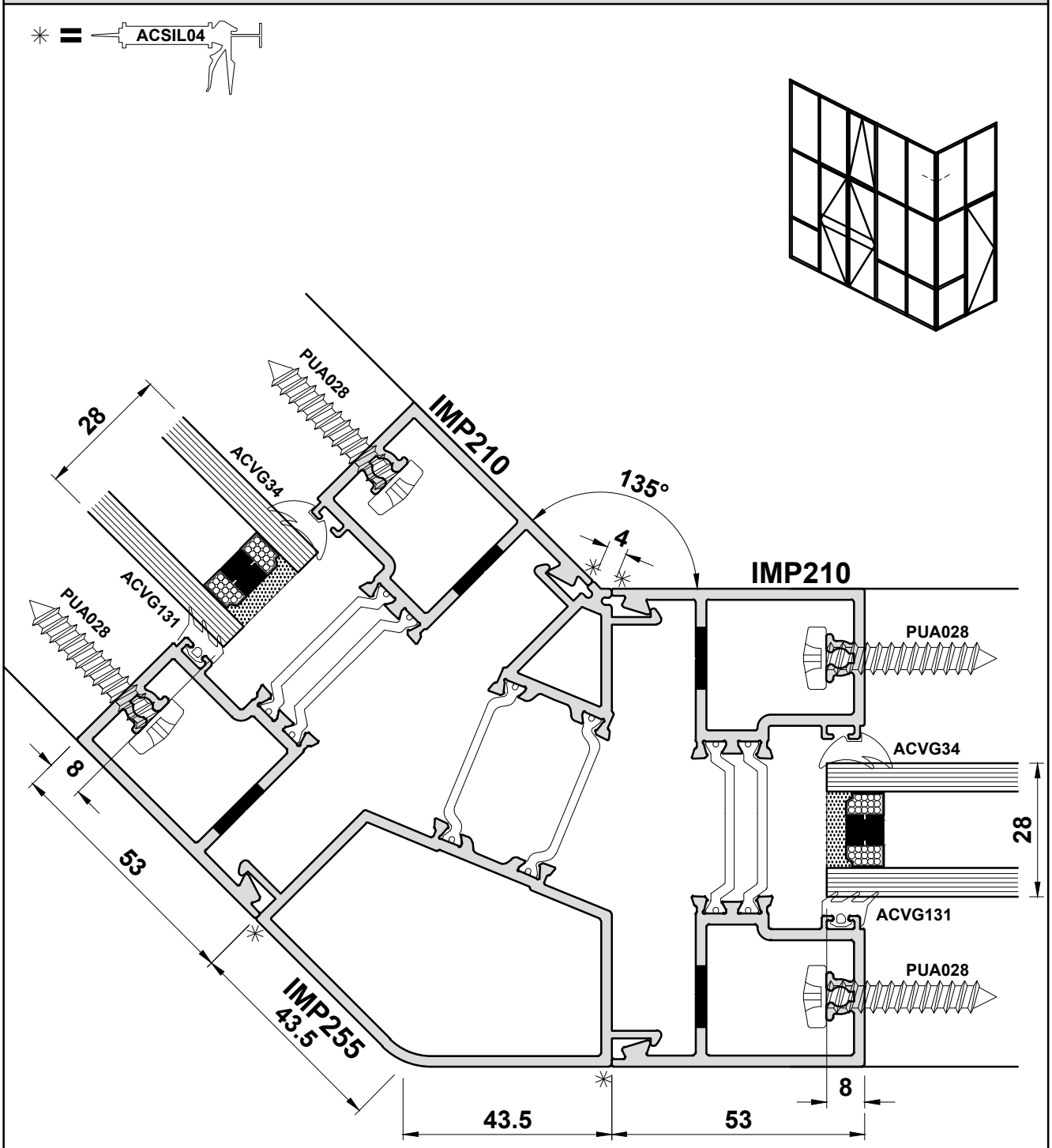

Do Not Scale From This Drawing

Detail 7

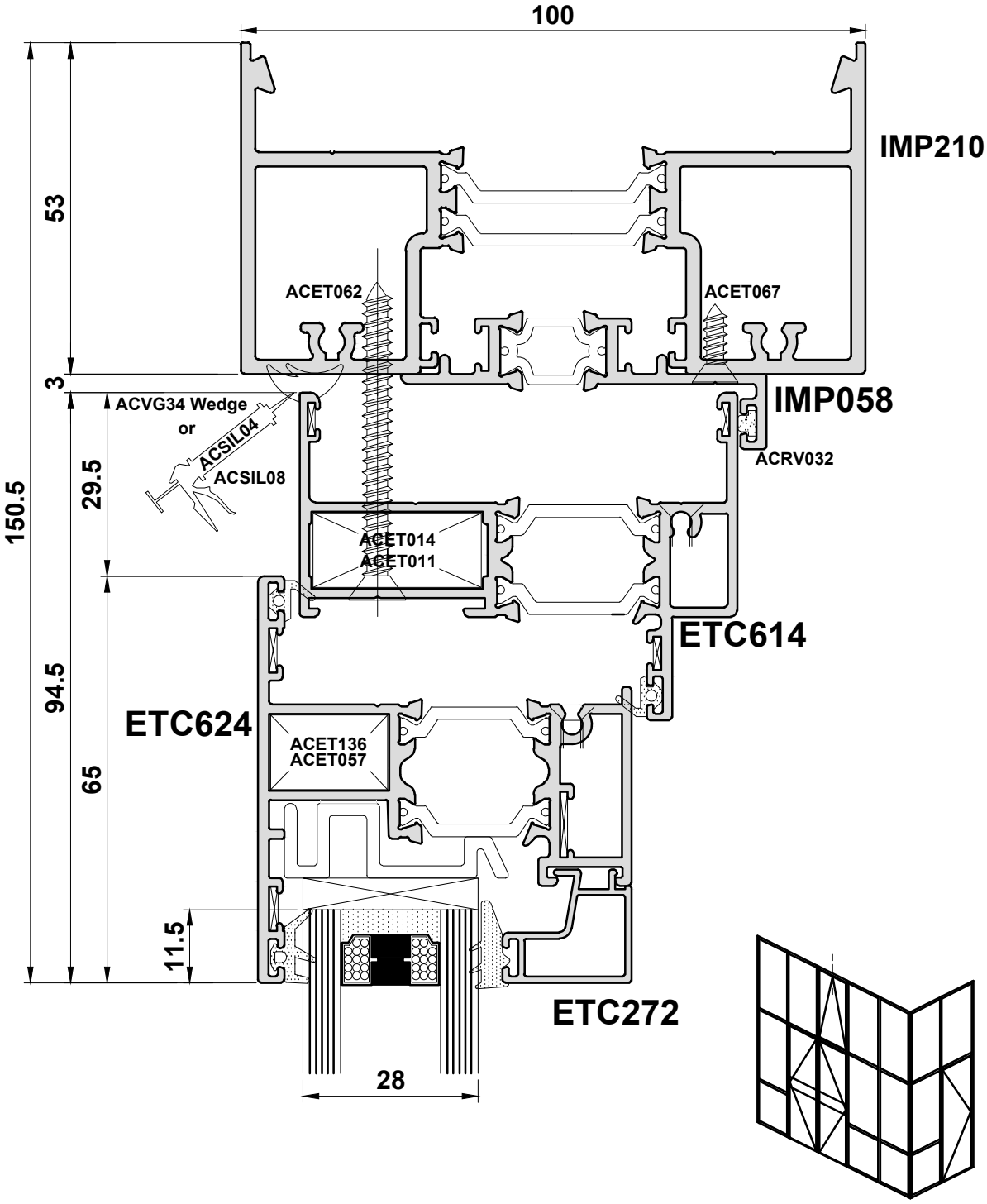

Do Not Scale From This Drawing

Detail 8A

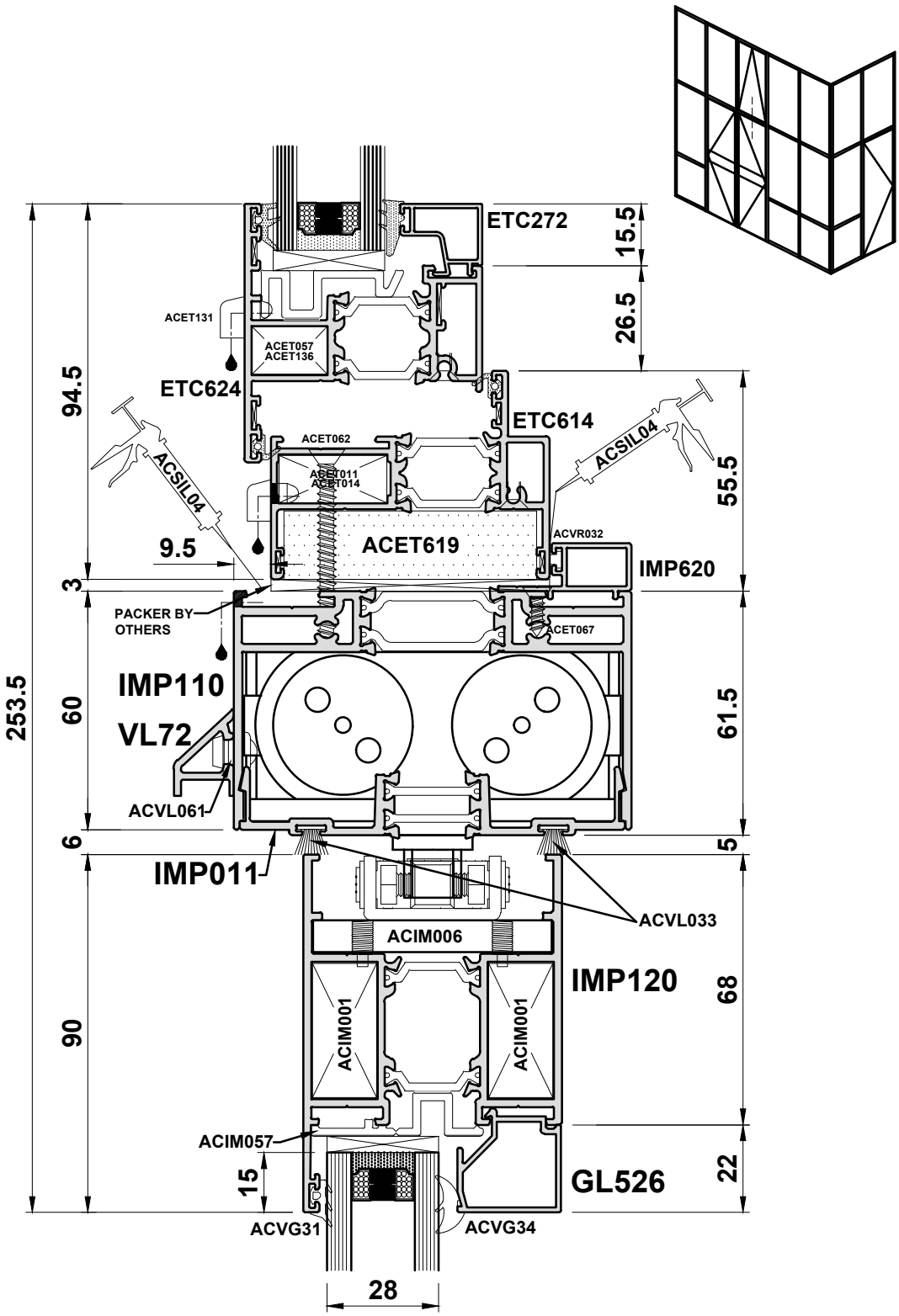

Do Not Scale From This Drawing

Detail 8B

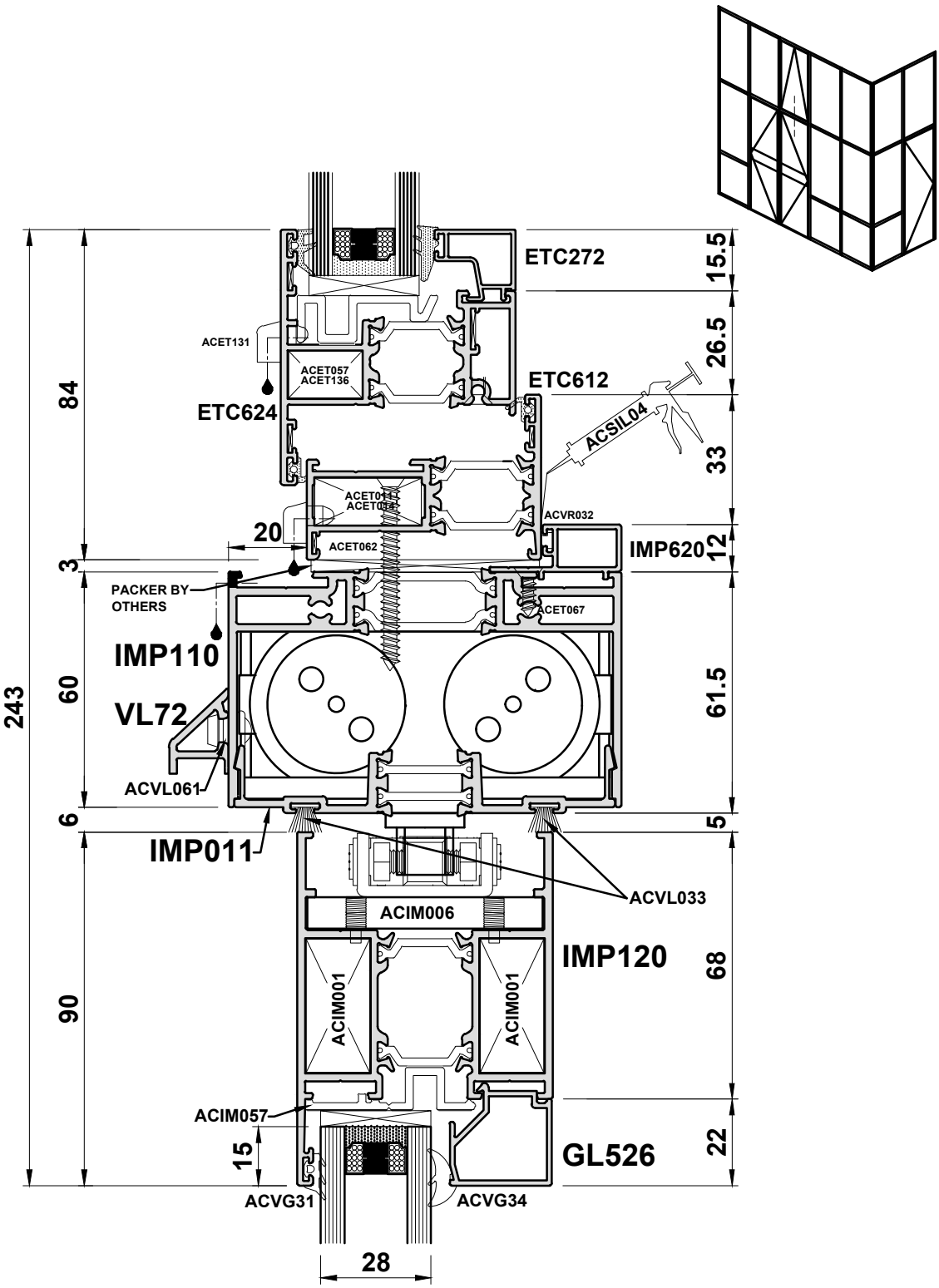

Do Not Scale From This Drawing

Detail 9

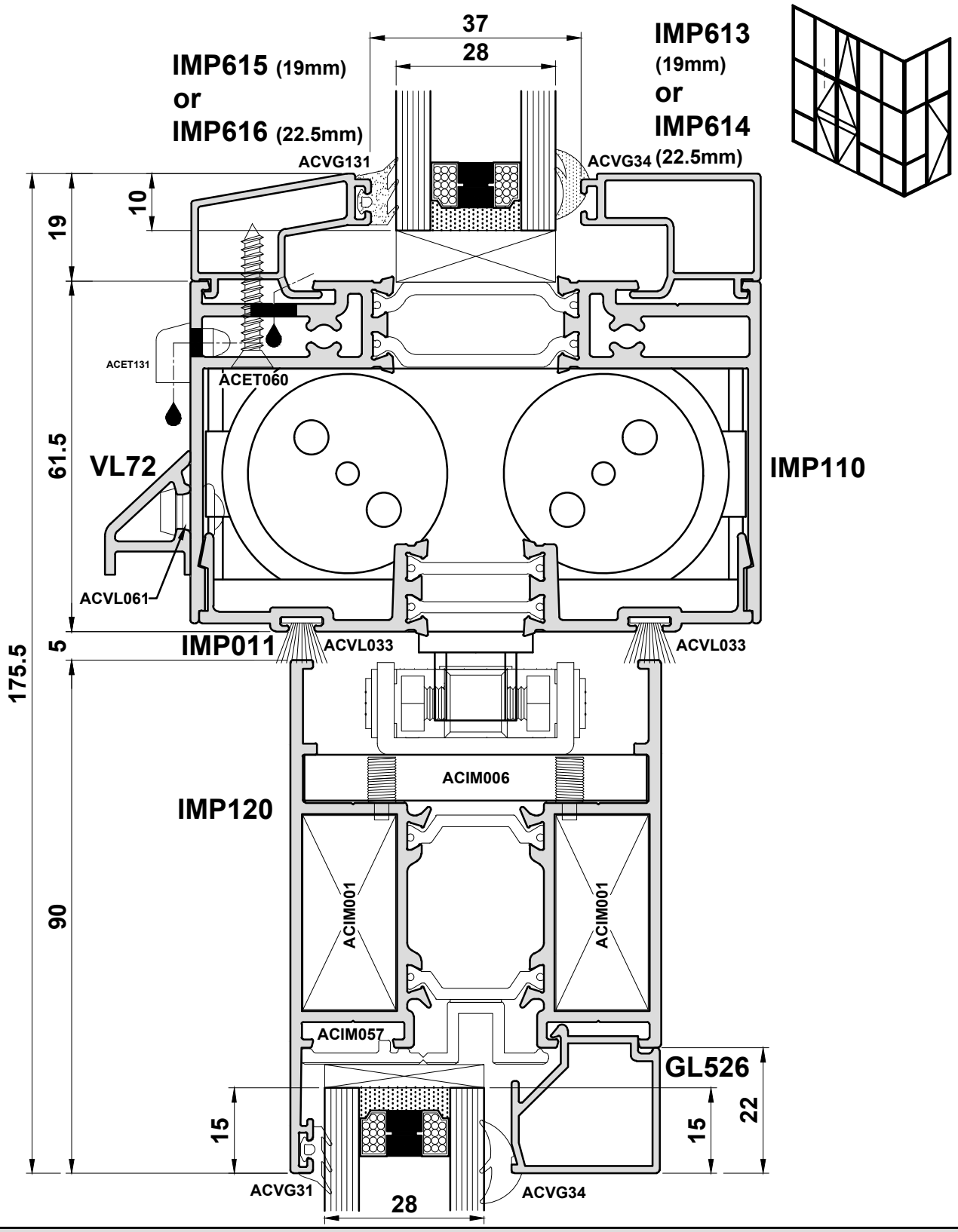

Do Not Scale From This Drawing

Smart Wall

Detail 10A

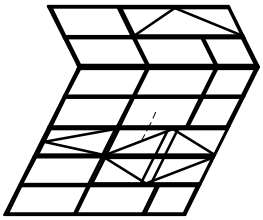

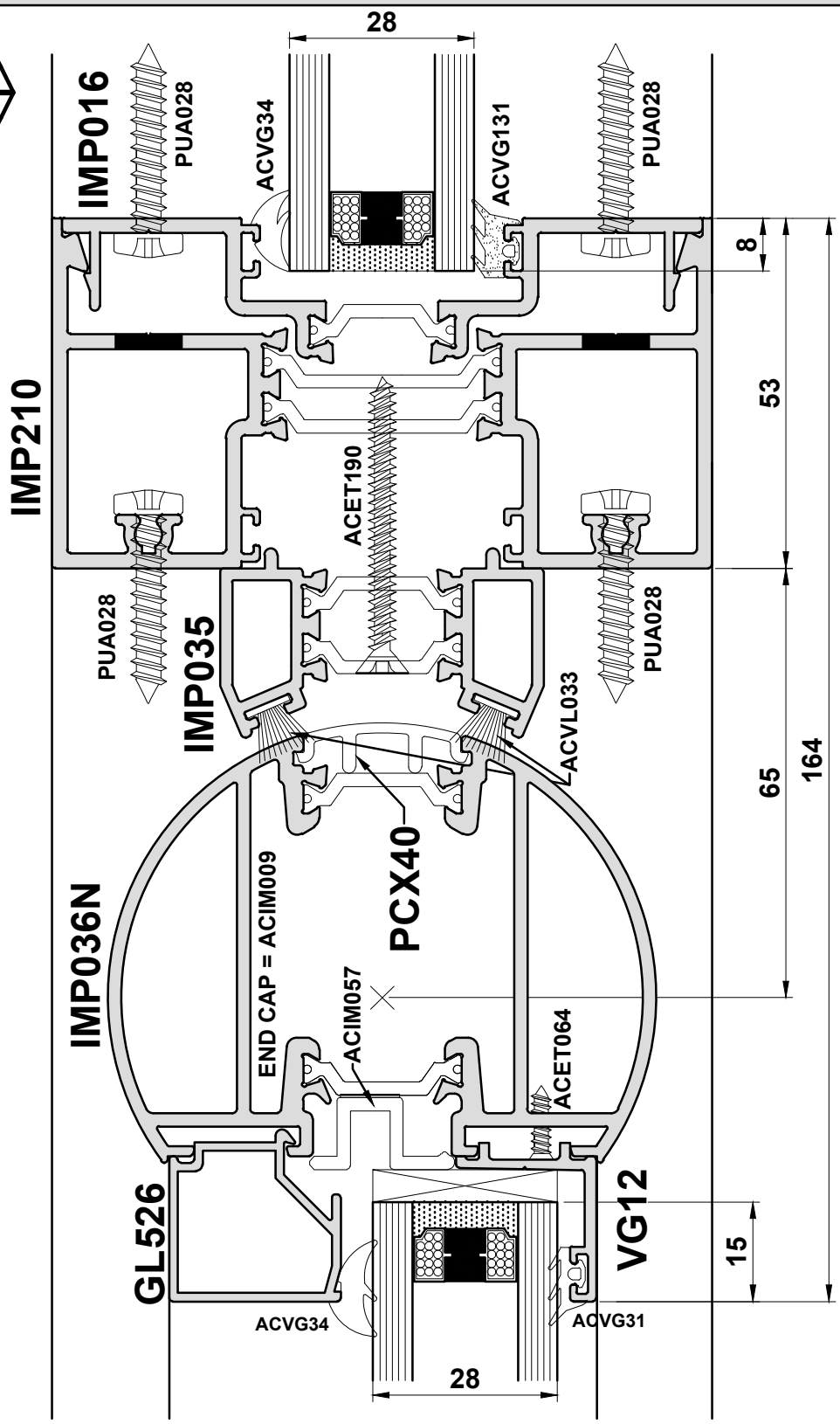

Do Not Scale From This Drawing

Detail 10B

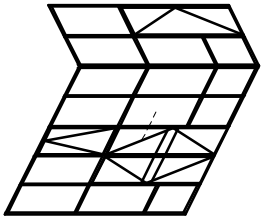

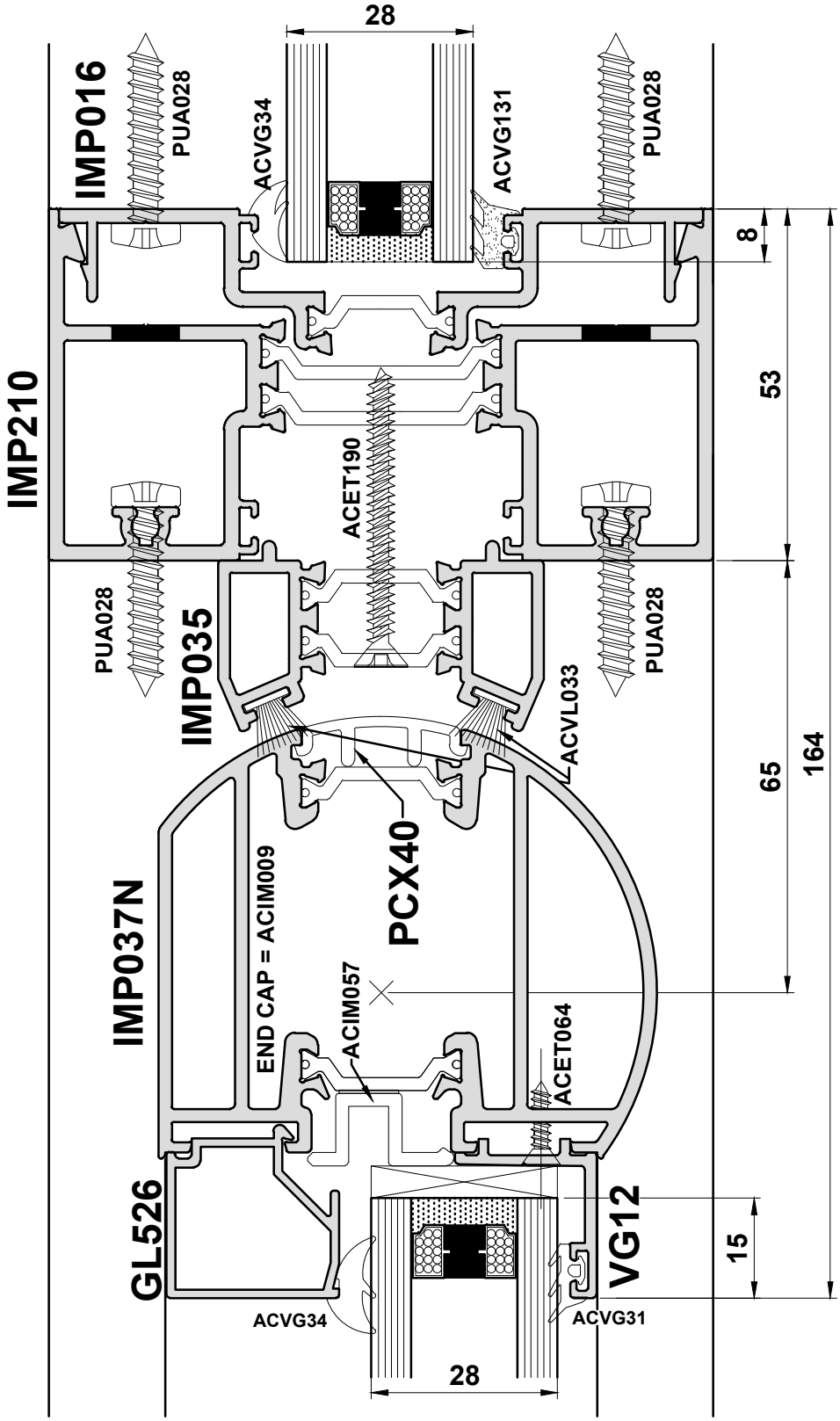

Do Not Scale From This Drawing

Detail 11A

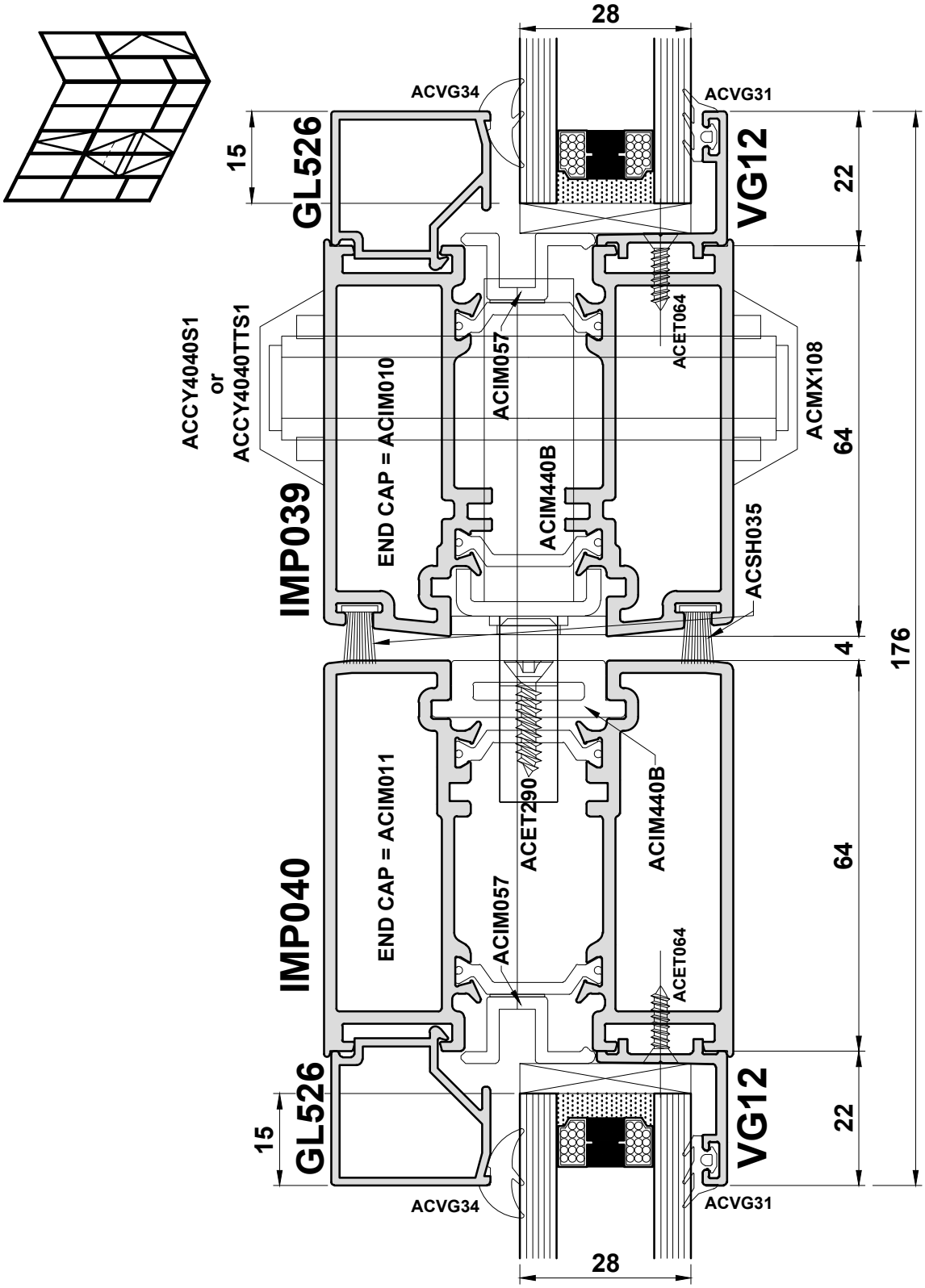

Do Not Scale From This Drawing

Detail 11B

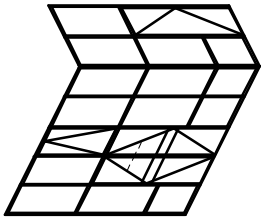

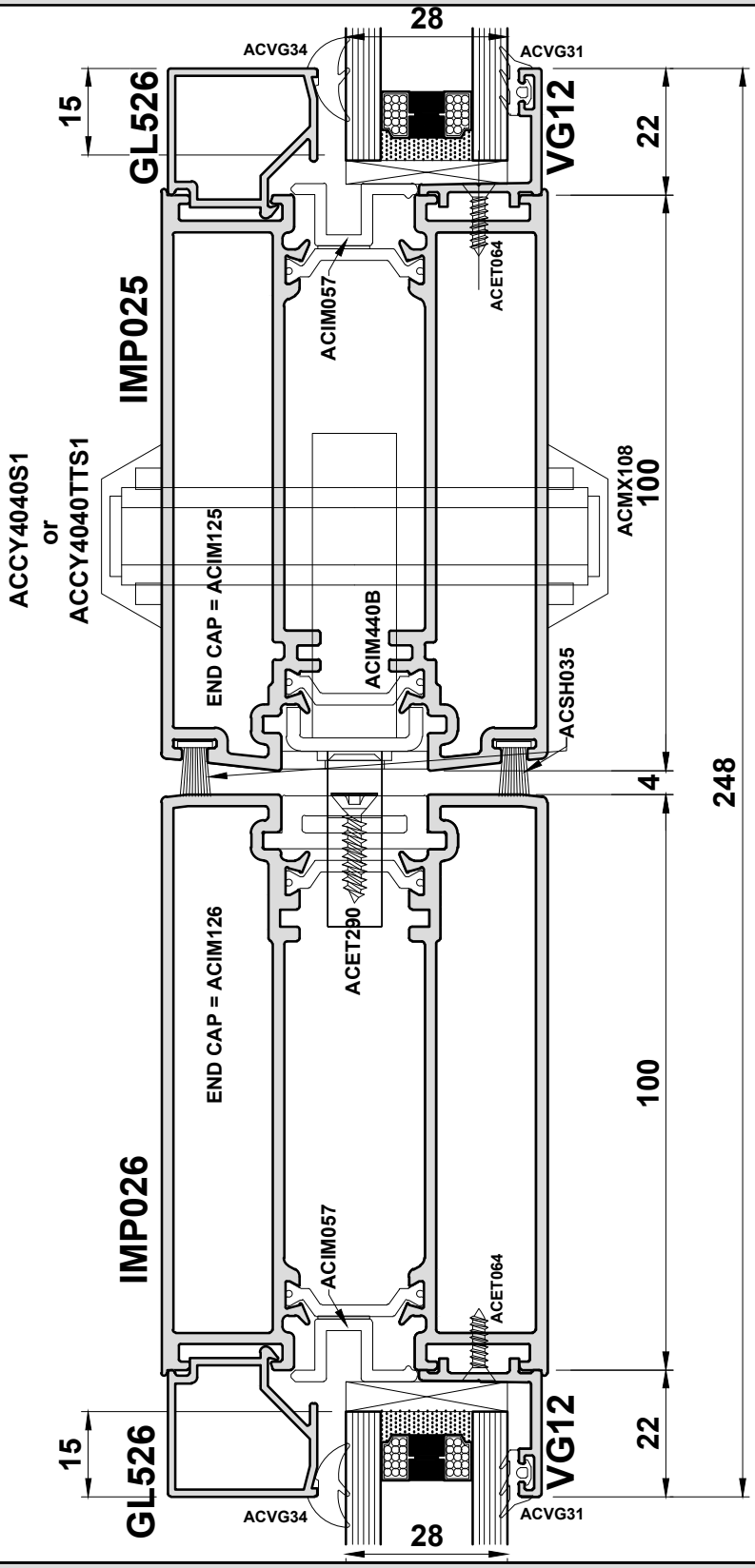

Do Not Scale From This Drawing

Detail 11C

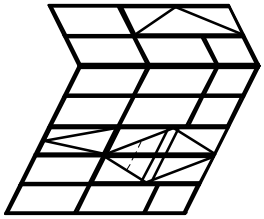

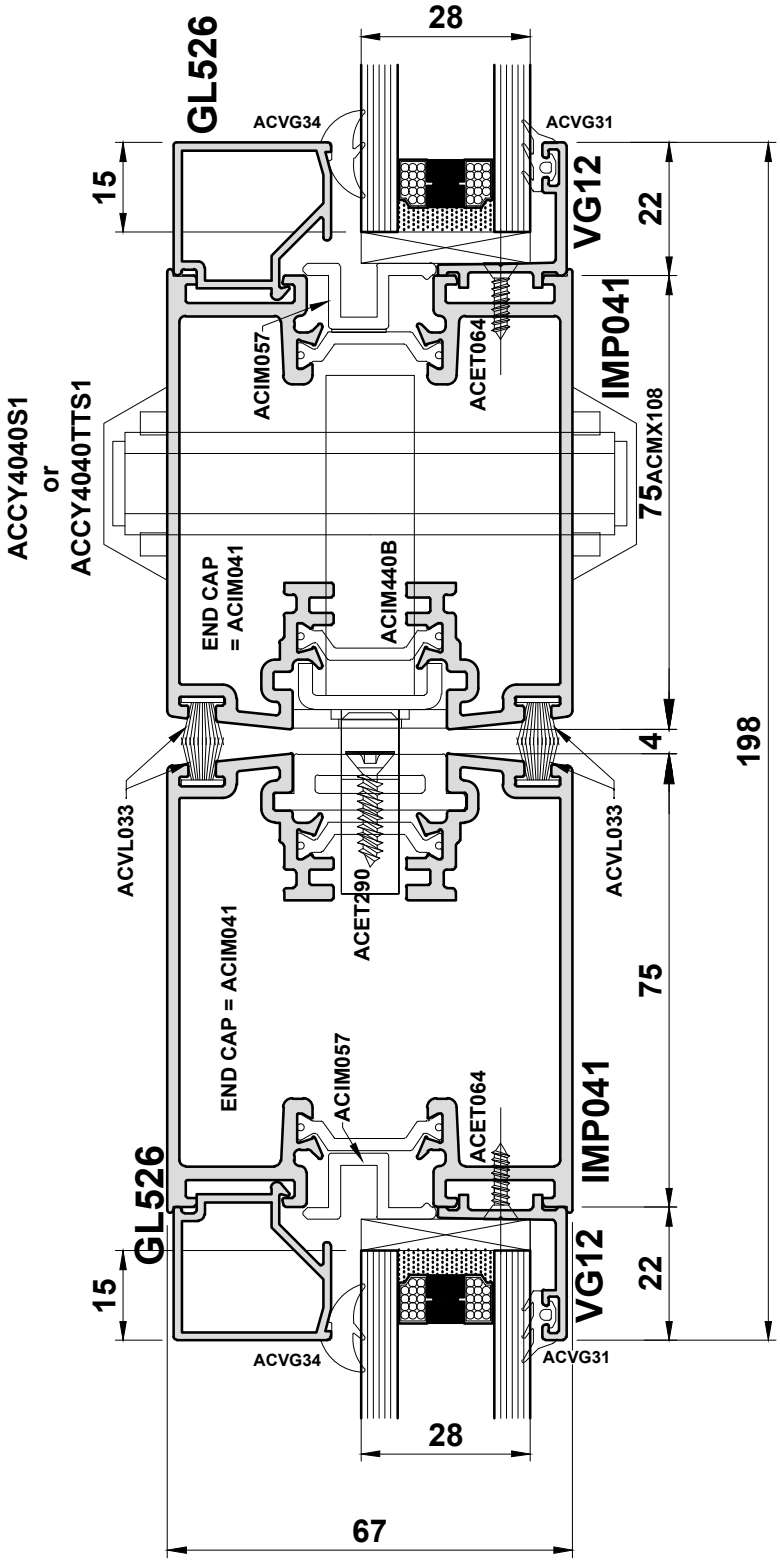

Do Not Scale From This Drawing

Detail 12A

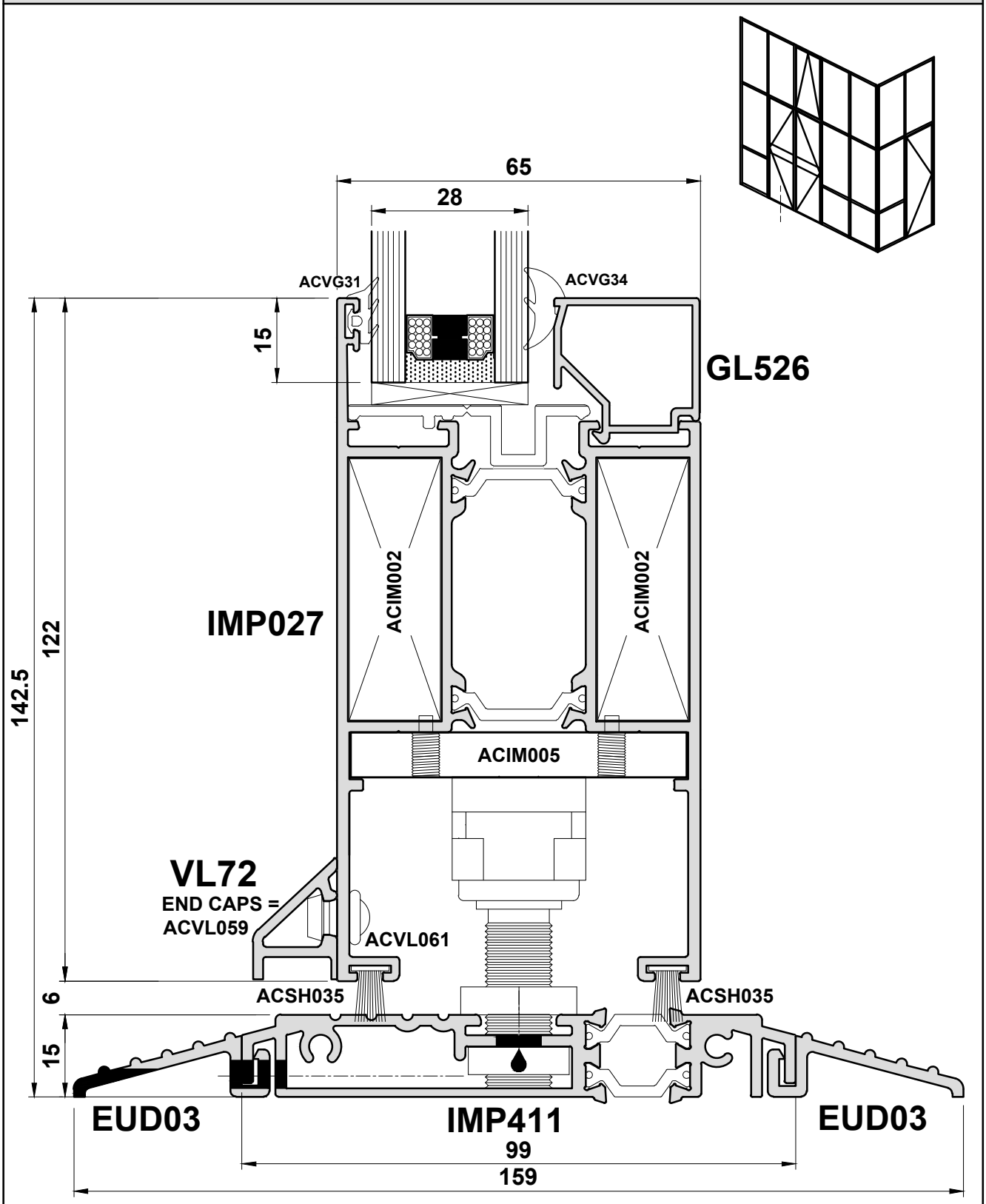
65
28
ACVG31
ACVG34
15
GL526
ACIM002
ACIM002
IMP027
122
142.5
ACIM005
VL72
END CAPS =
ACVL059
ACVL061
6
ACSH035
ACSH035
15
EUD03
IMP411
EUD03
99
159

Detail 12B

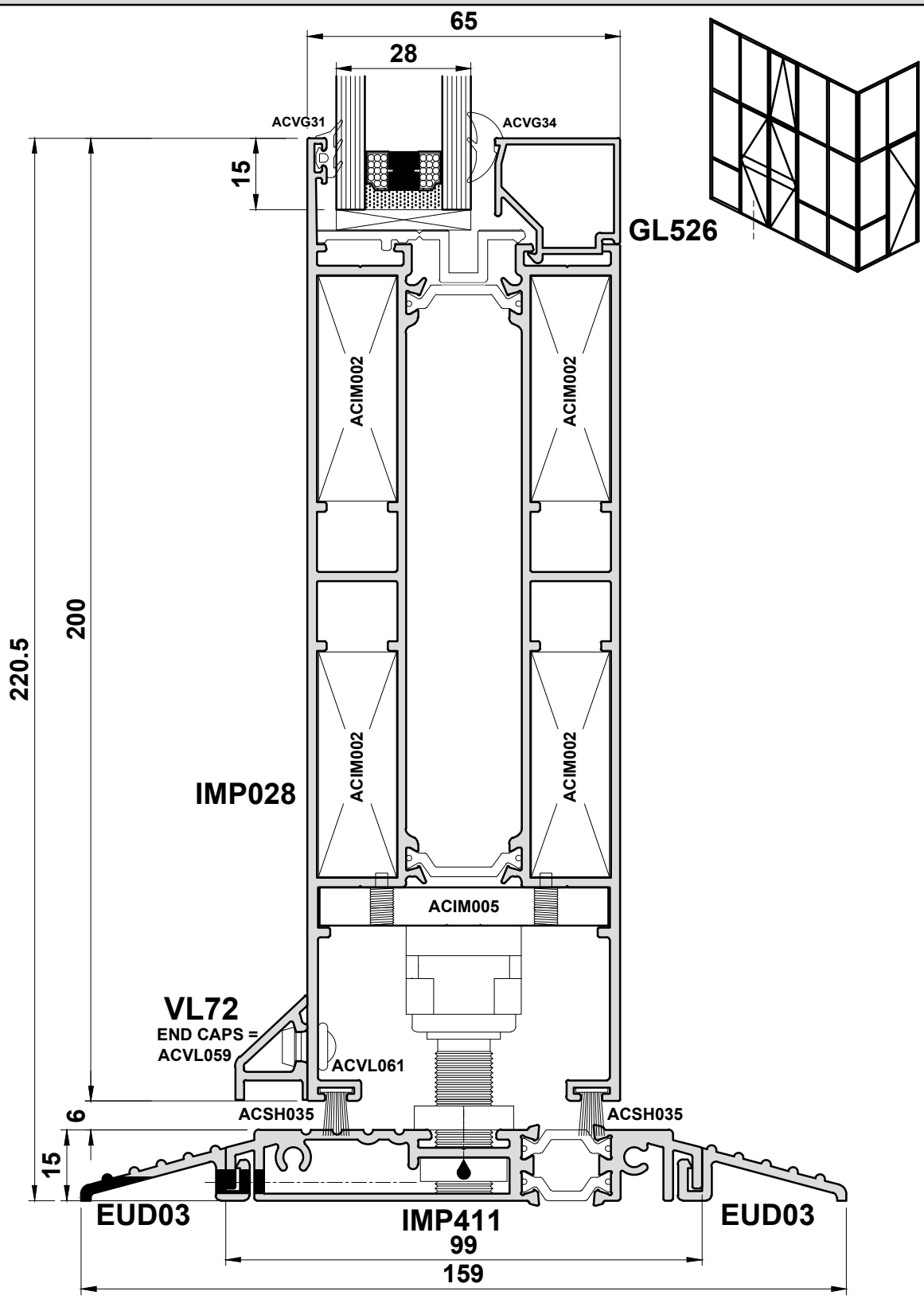

Do Not Scale From This Drawing

Detail 13A

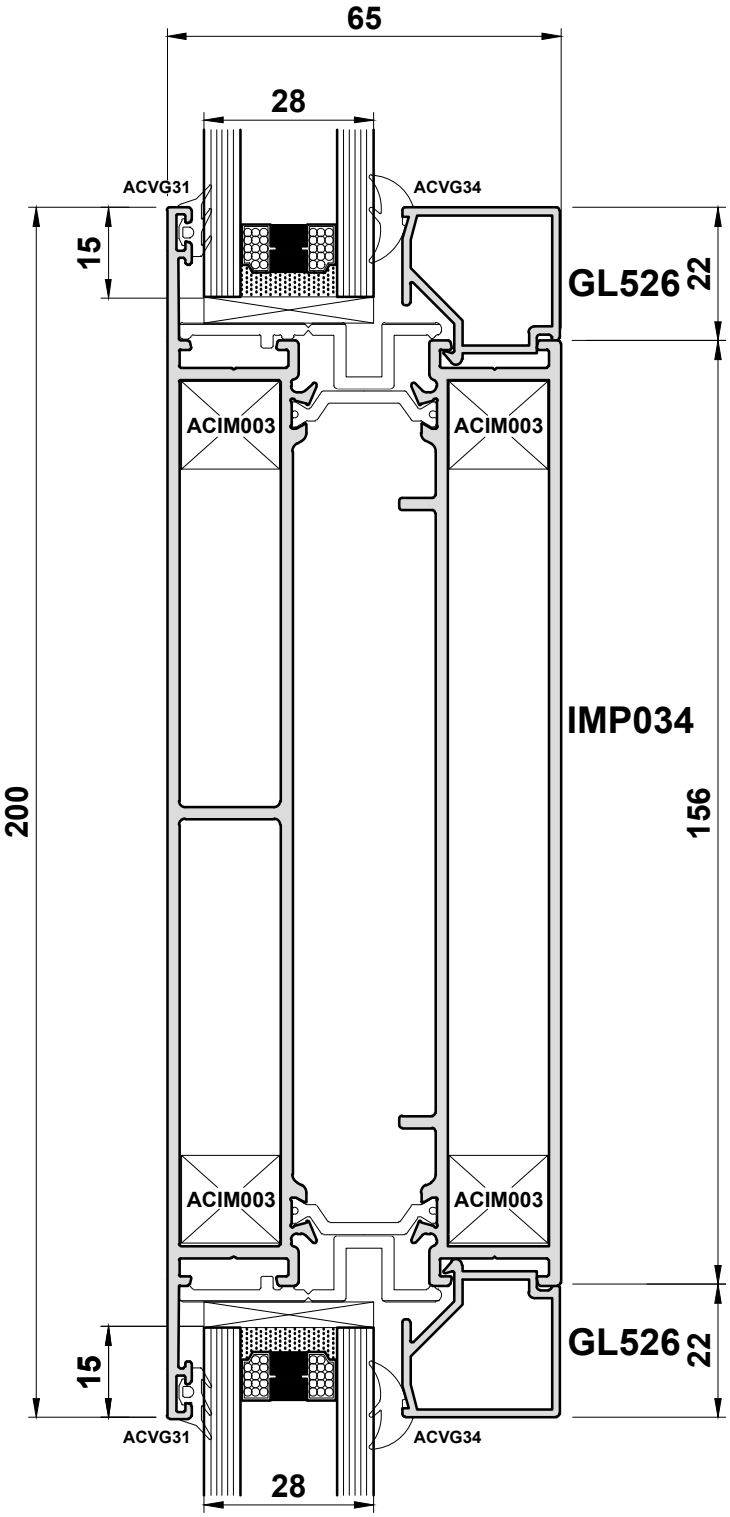

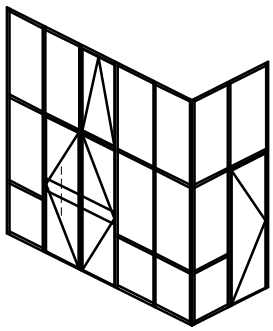

IMP034 can be fitted into fixed screens using ACIM025 brackets
Please Note: Door rails are not compatible with IMP215.

Do Not Scale From This Drawing

Detail 13B

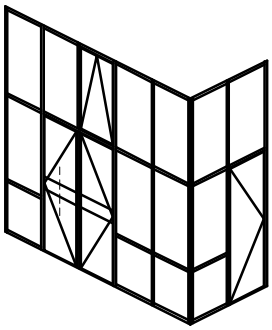

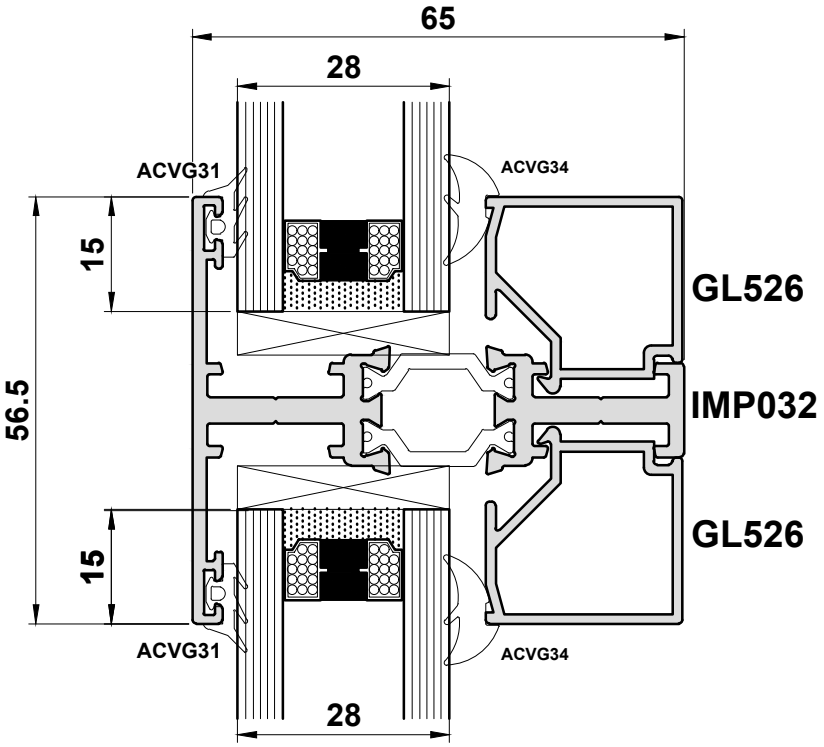

Brackets = ACIM032

Do Not Scale From This Drawing

Detail 14A

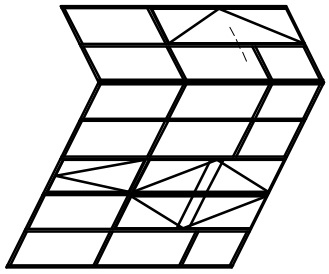

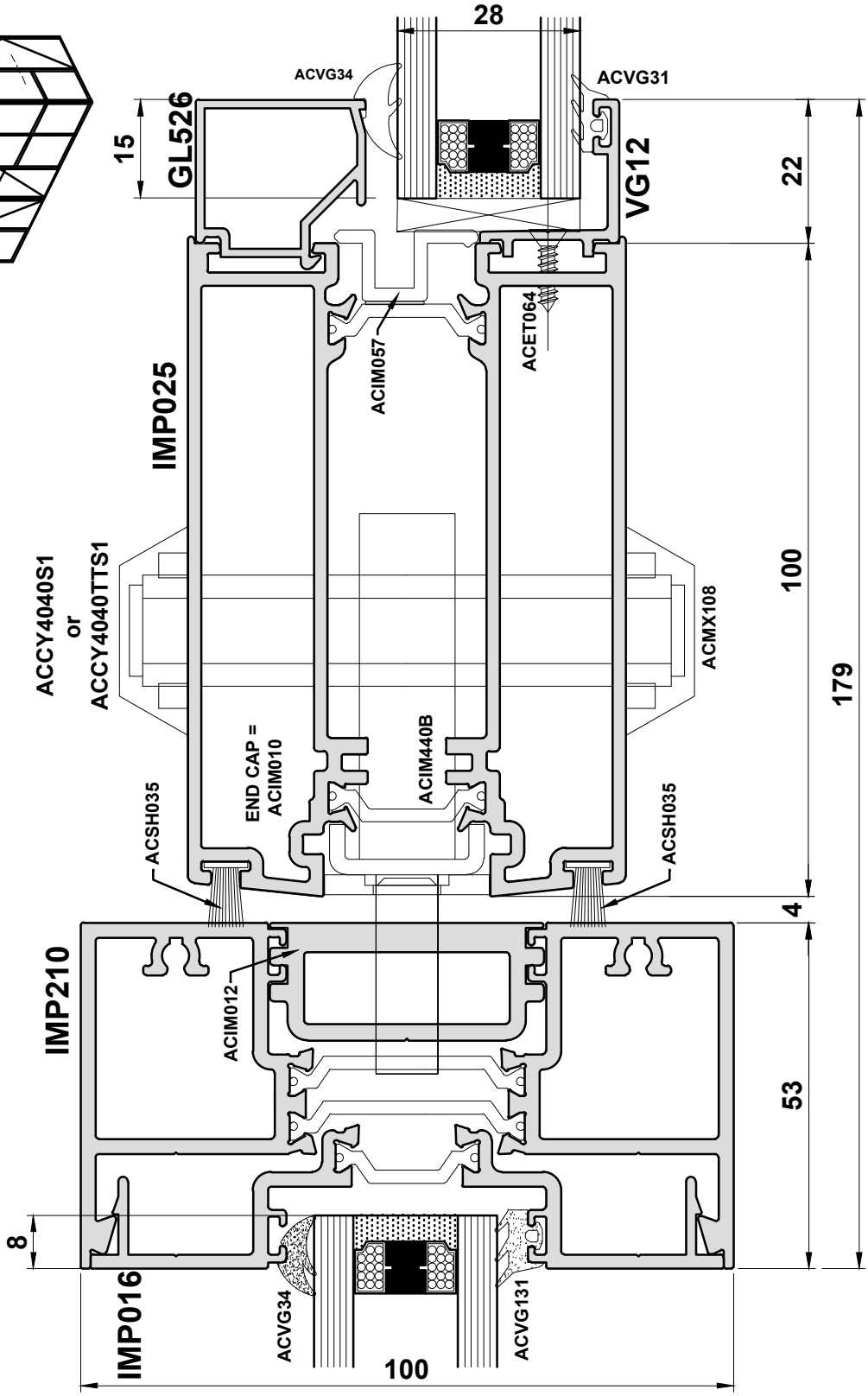

Do Not Scale From This Drawing

Smart Wall

Detail 14B

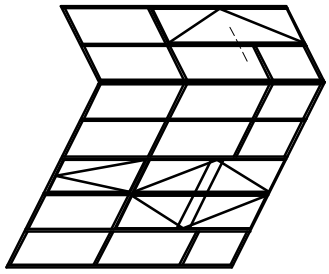

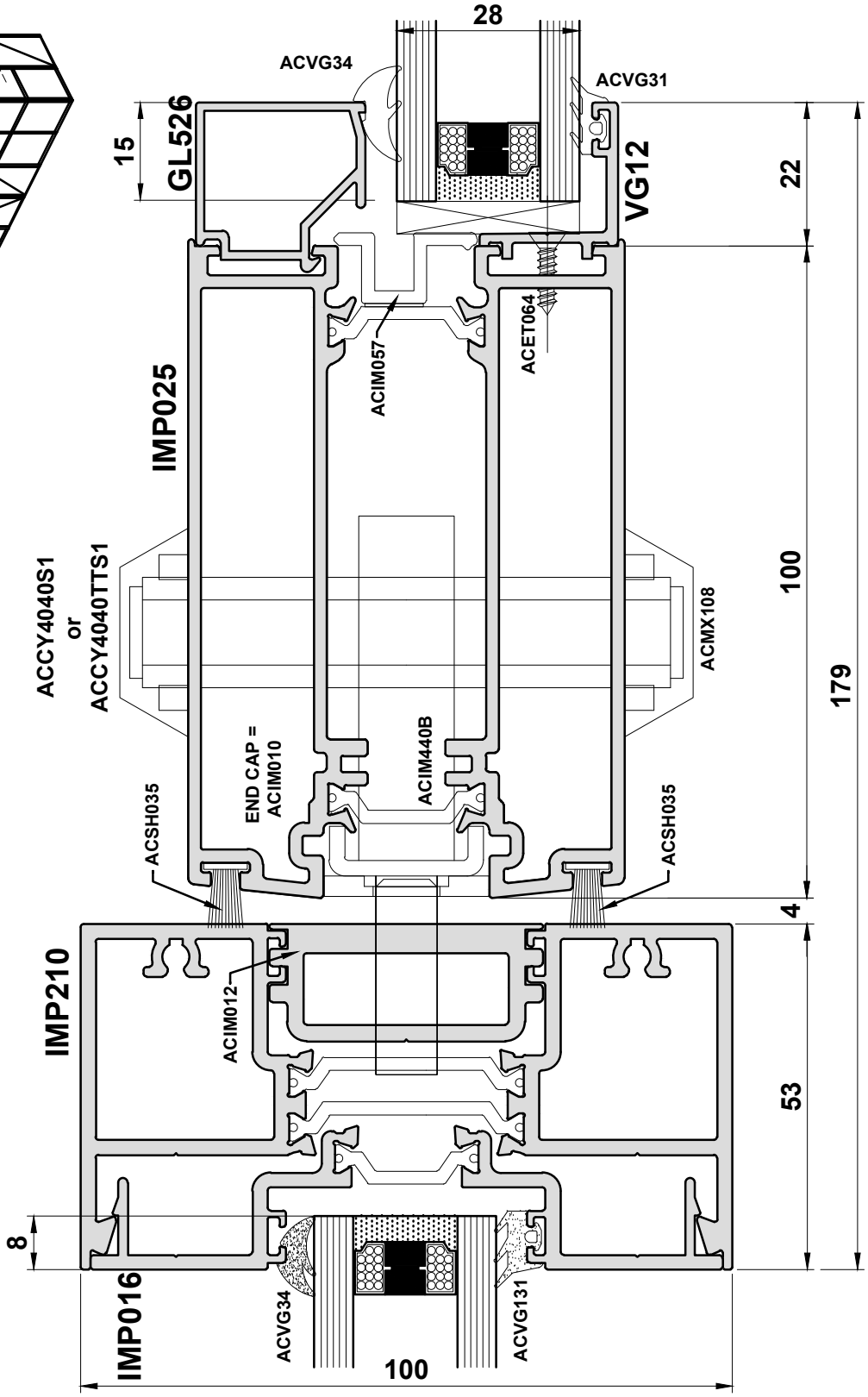

Do Not Scale From This Drawing

This page is intentionally left blank

Do Not Scale From This Drawing

Rebated Doors - Hinged

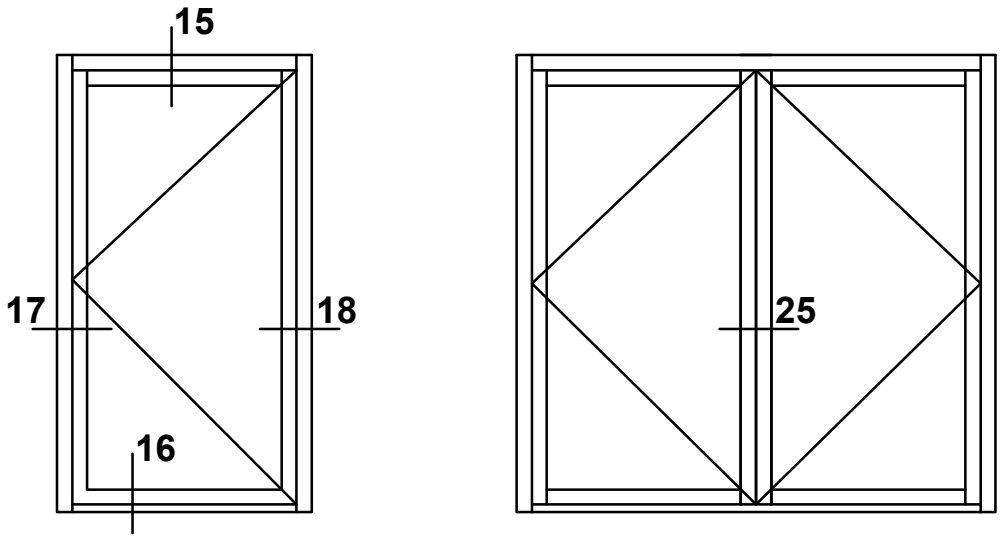

Weight Limitations:
2 Hinges = 80kg
3 Hinges = 100kg

Please note that door closers increase the loading of the door and their rate of wear. When calculating the weight of the door, 20% should be added to allow for the impact of a door closer without back-check and 75% should be added when using a closer with back-check.

Example:
Door closer without back-check: 65kg + 20% = 78kg (2 hinges)
Door closer with back-check: 55kg + 75% = 96kg (3 hinges)

Do Not Scale From This Drawing

Detail 15

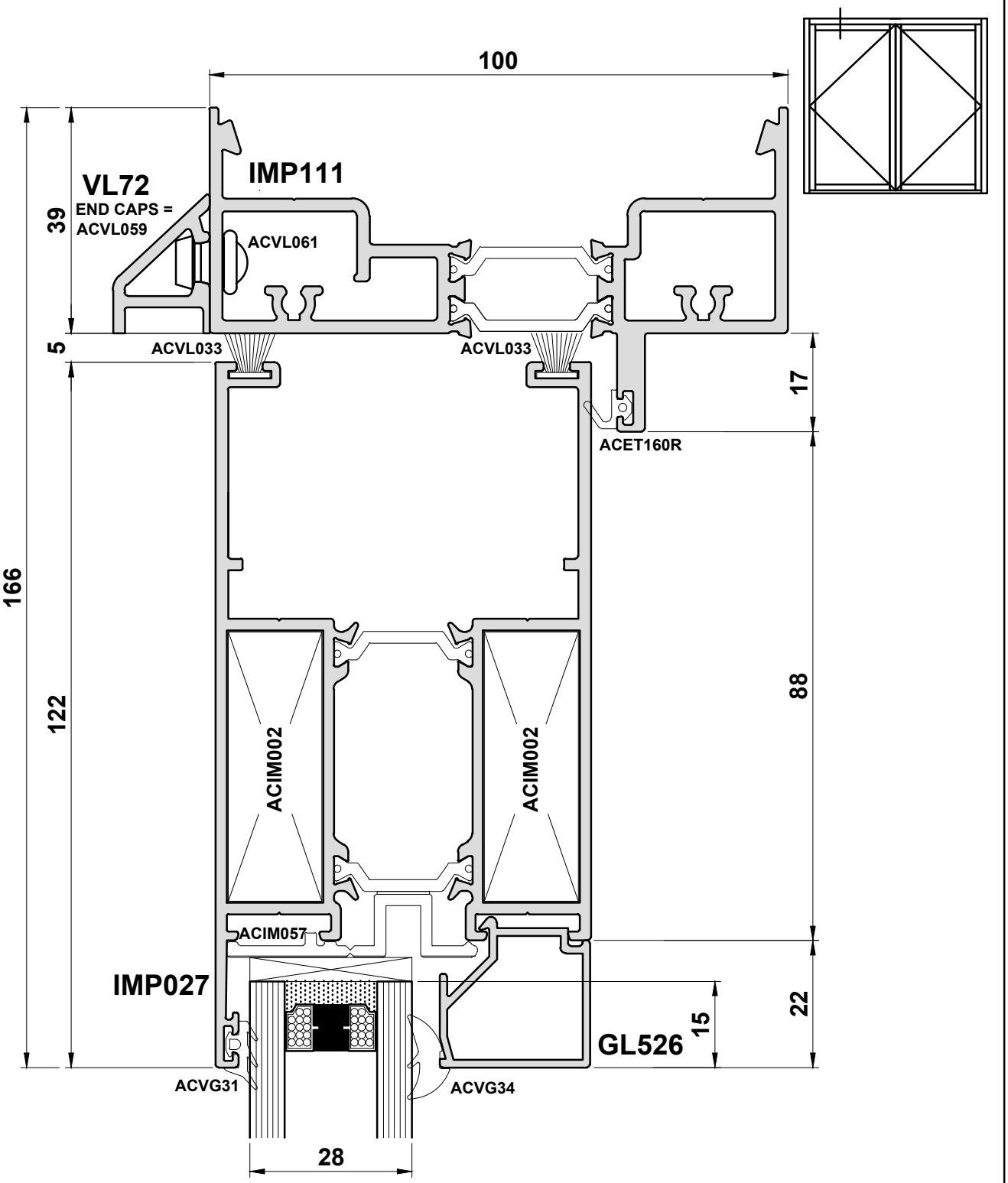

Do Not Scale From This Drawing

Detail 16

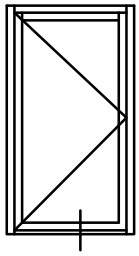

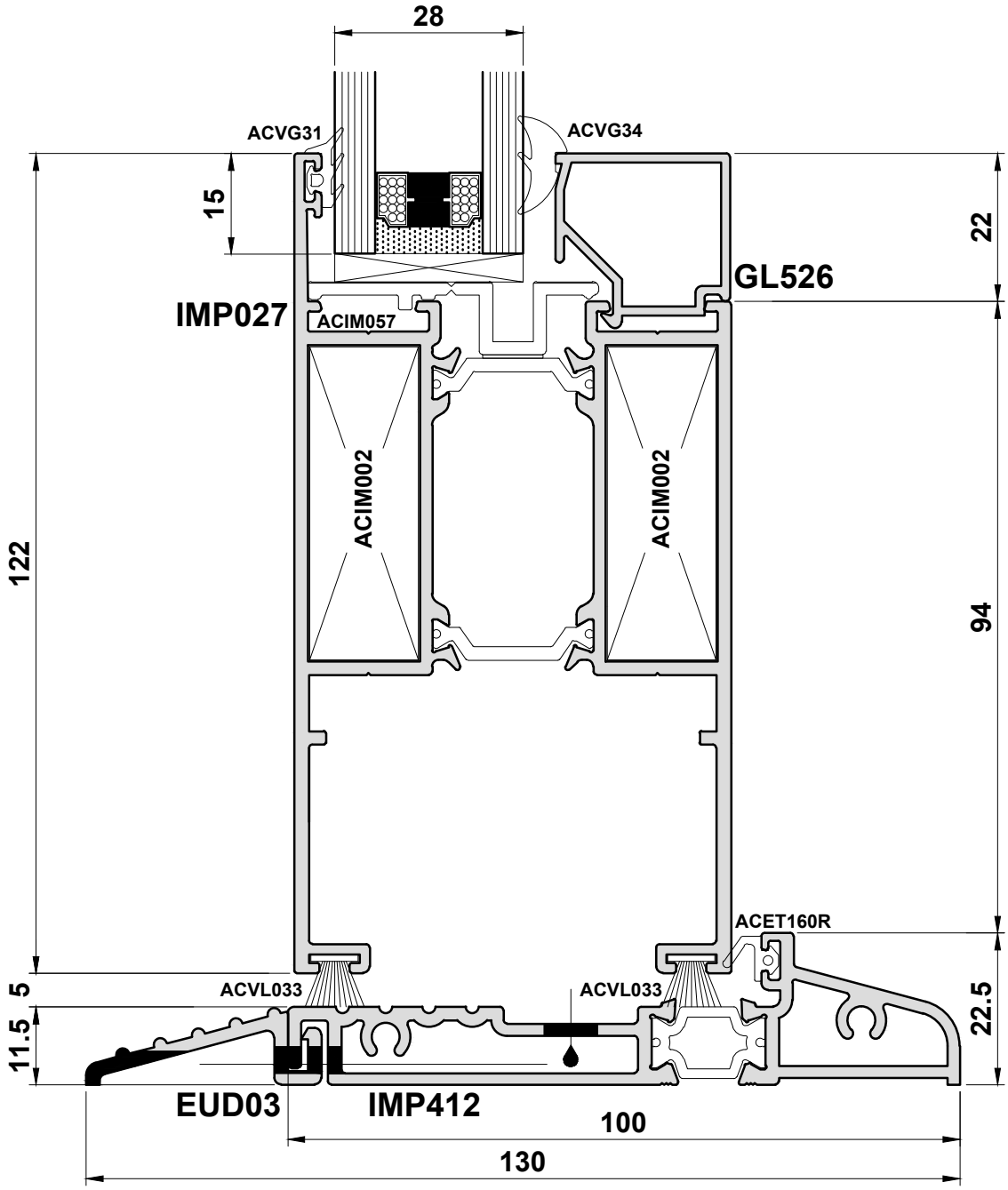

Do Not Scale From This Drawing

Smart Wall

Detail 17

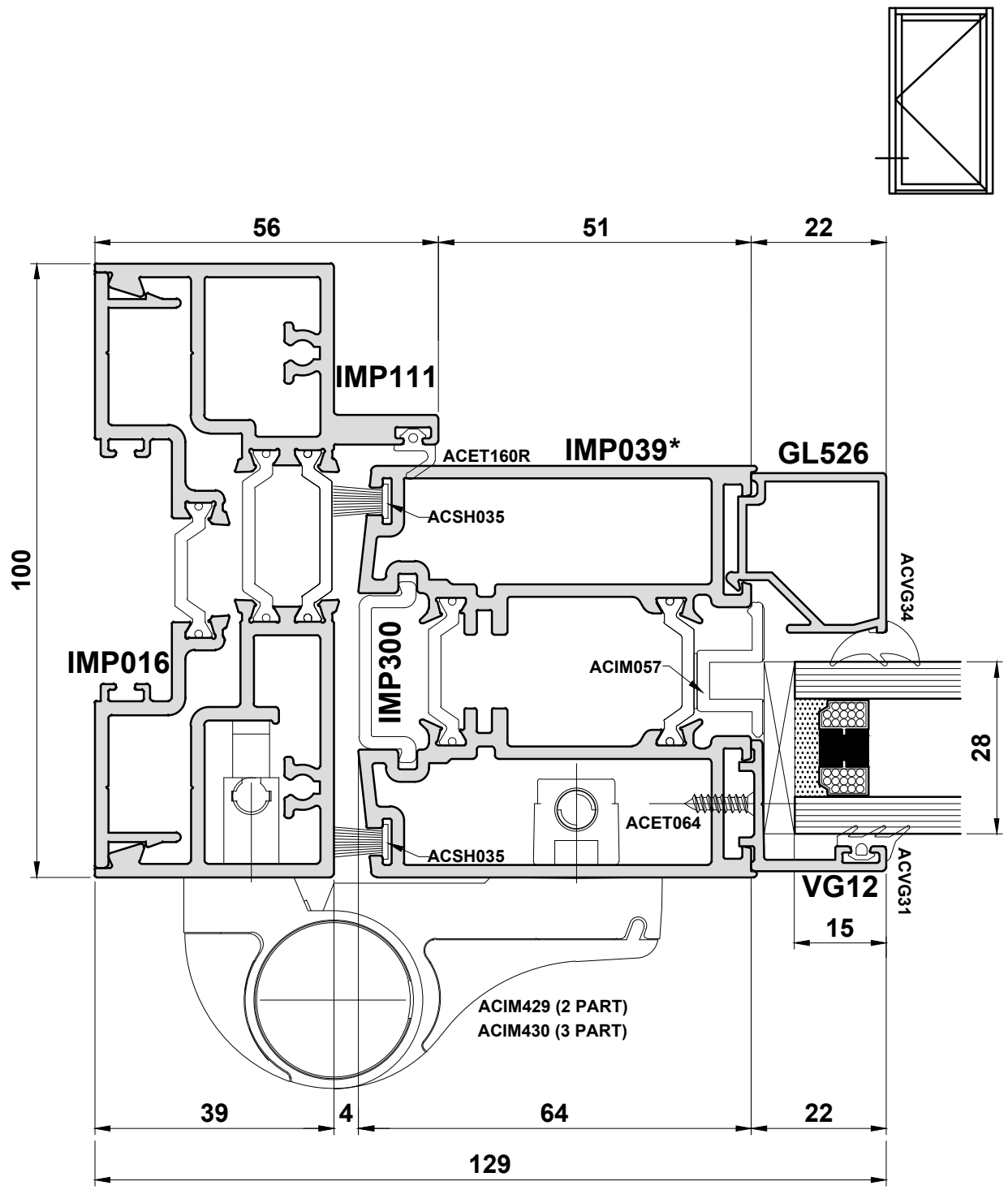

***Consider using IMP025 or IMP041 as stile depending on ironmongery**

Do Not Scale From This Drawing

Detail 18

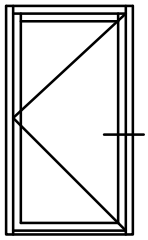

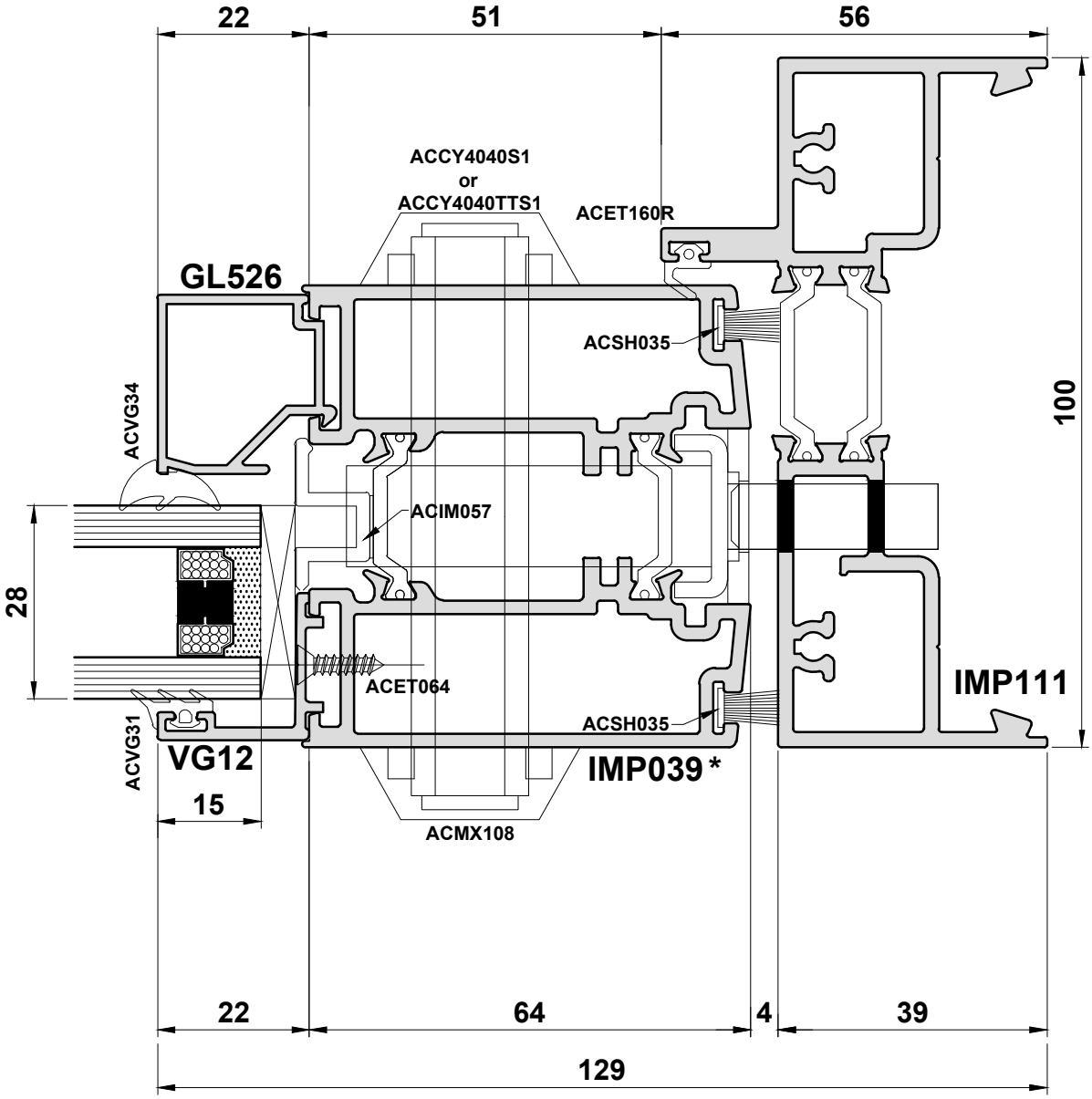

Consider using IMP025 or IMP041 as stile depending on ironmongery

Do Not Scale From This Drawing

Do Not Scale From This Drawing

Rebated Doors - Concealed Closer

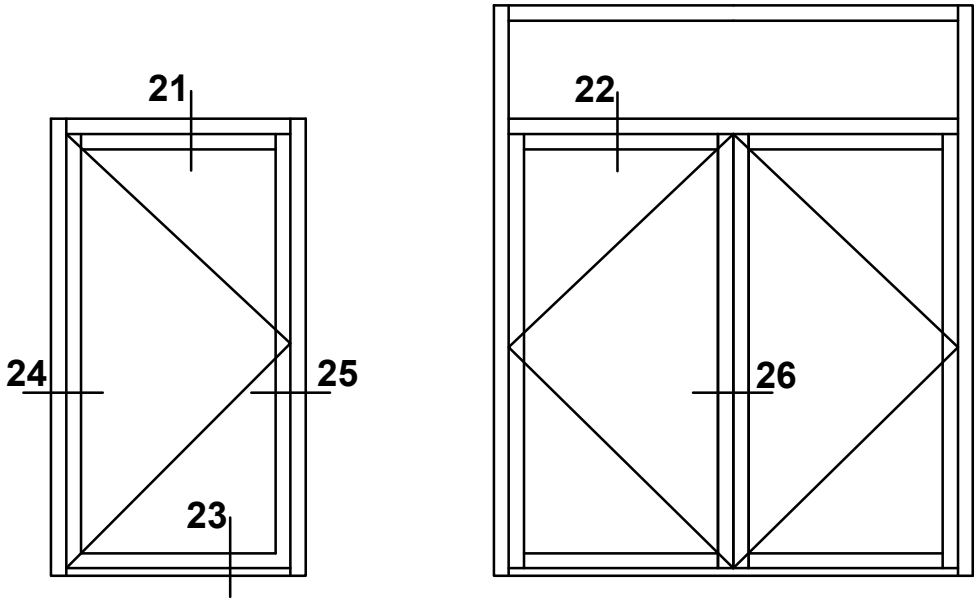

Do Not Scale From This Drawing

Detail 21 - Open Out

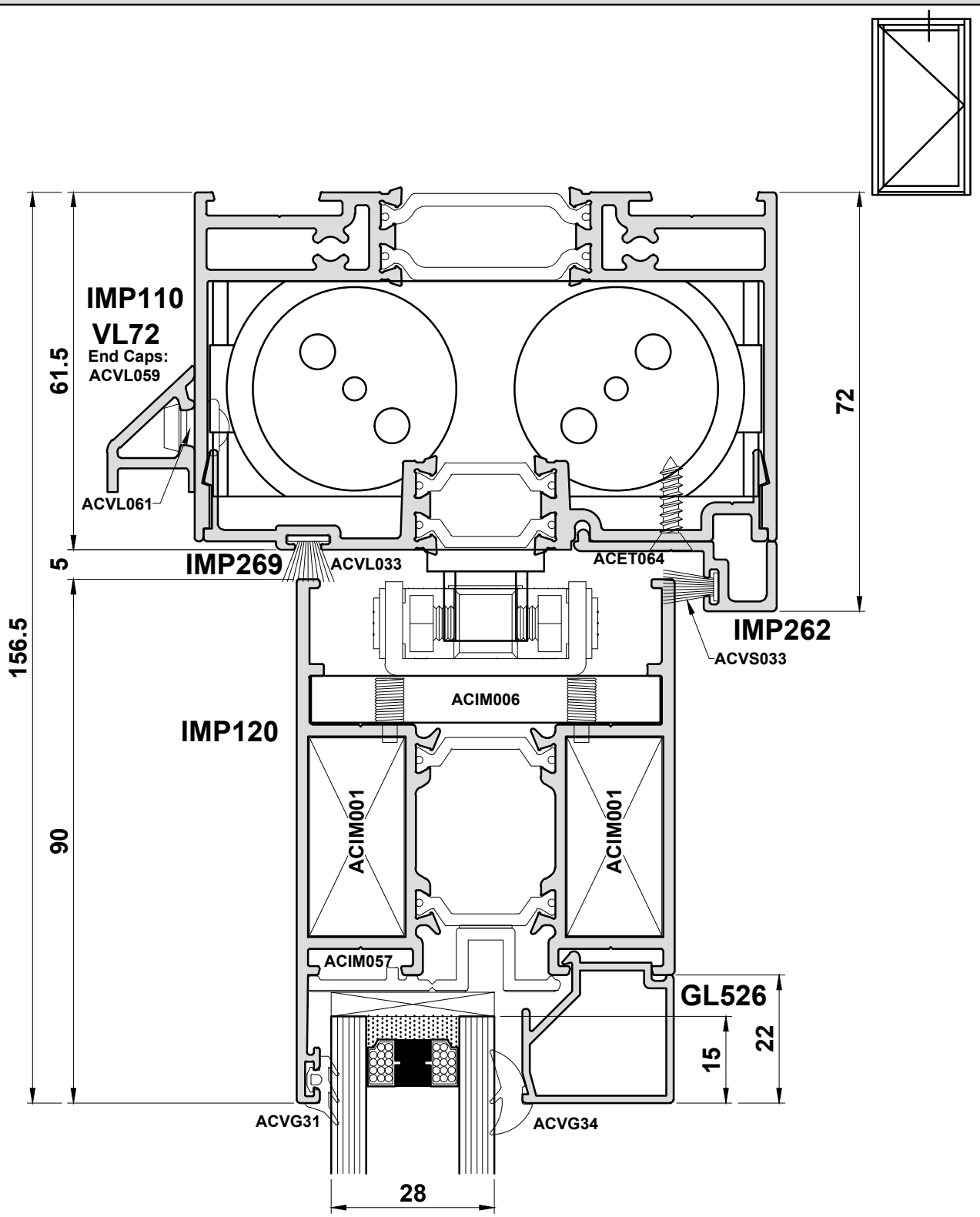

Do Not Scale From This Drawing

Detail 21 - Open In

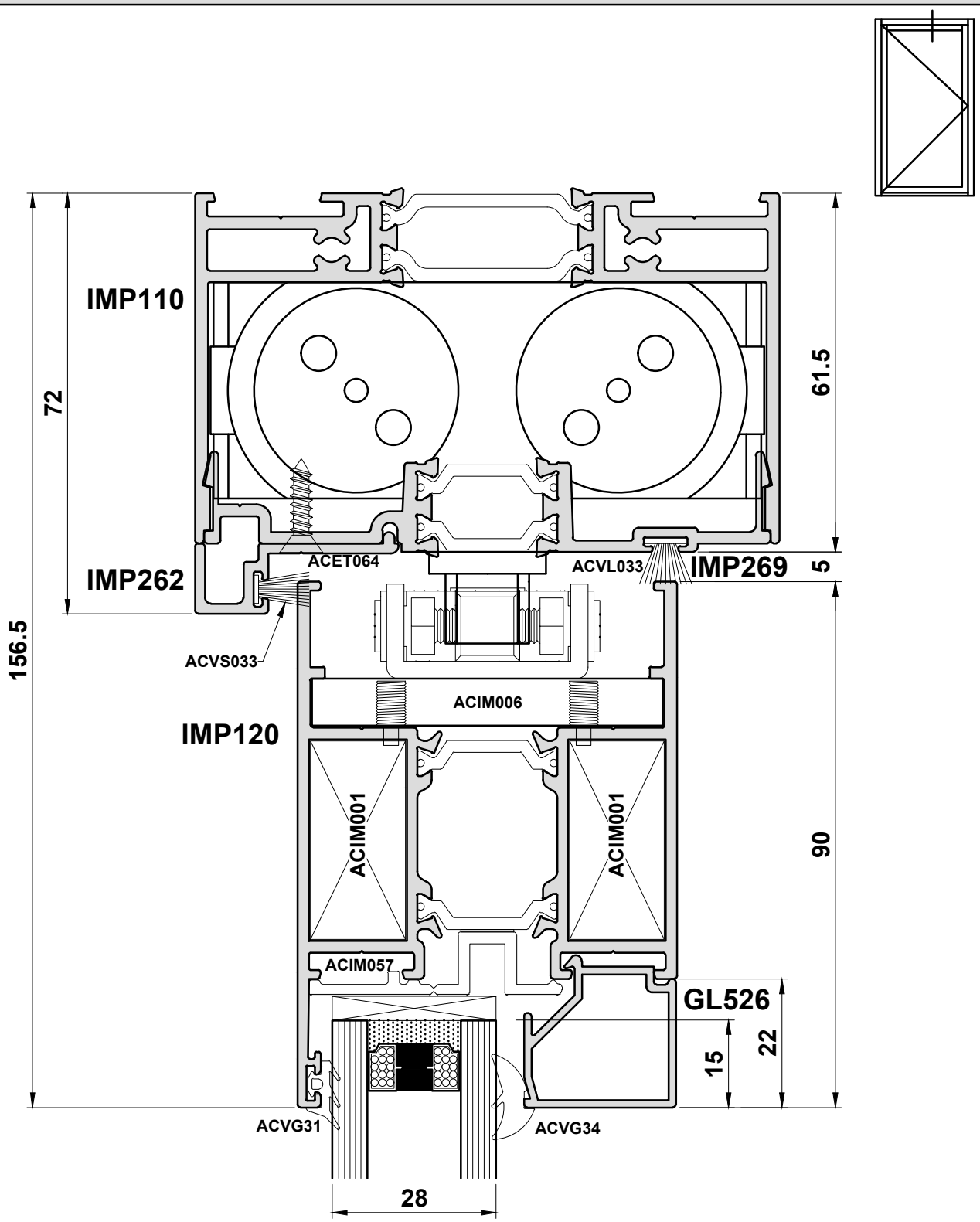

Do Not Scale From This Drawing

Detail 22 - Open Out

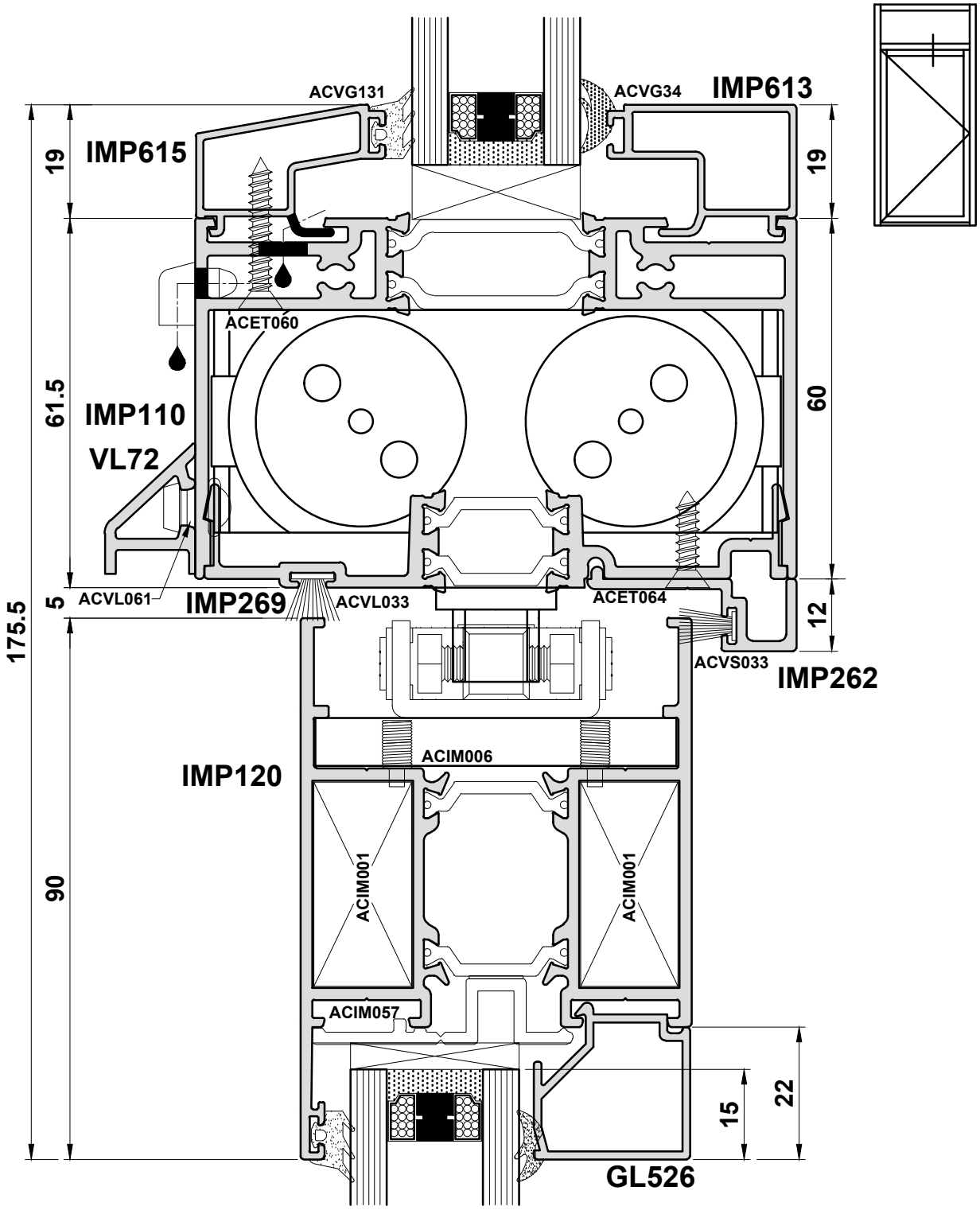

Important Note: The above detail requires IMP210 jambs.

Do Not Scale From This Drawing

Detail 23A - Open Out

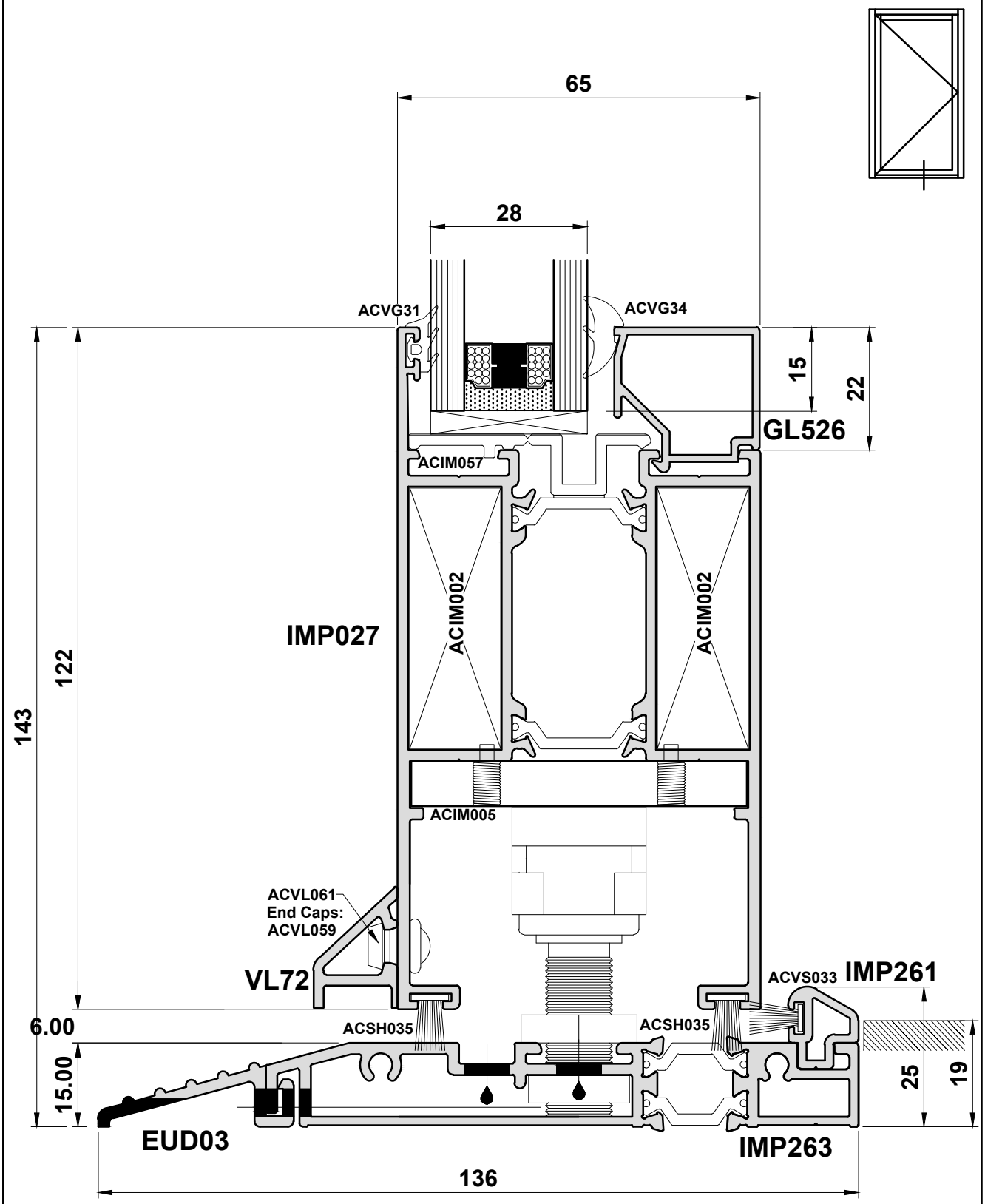

Do Not Scale From This Drawing

Detail 23B - Open In

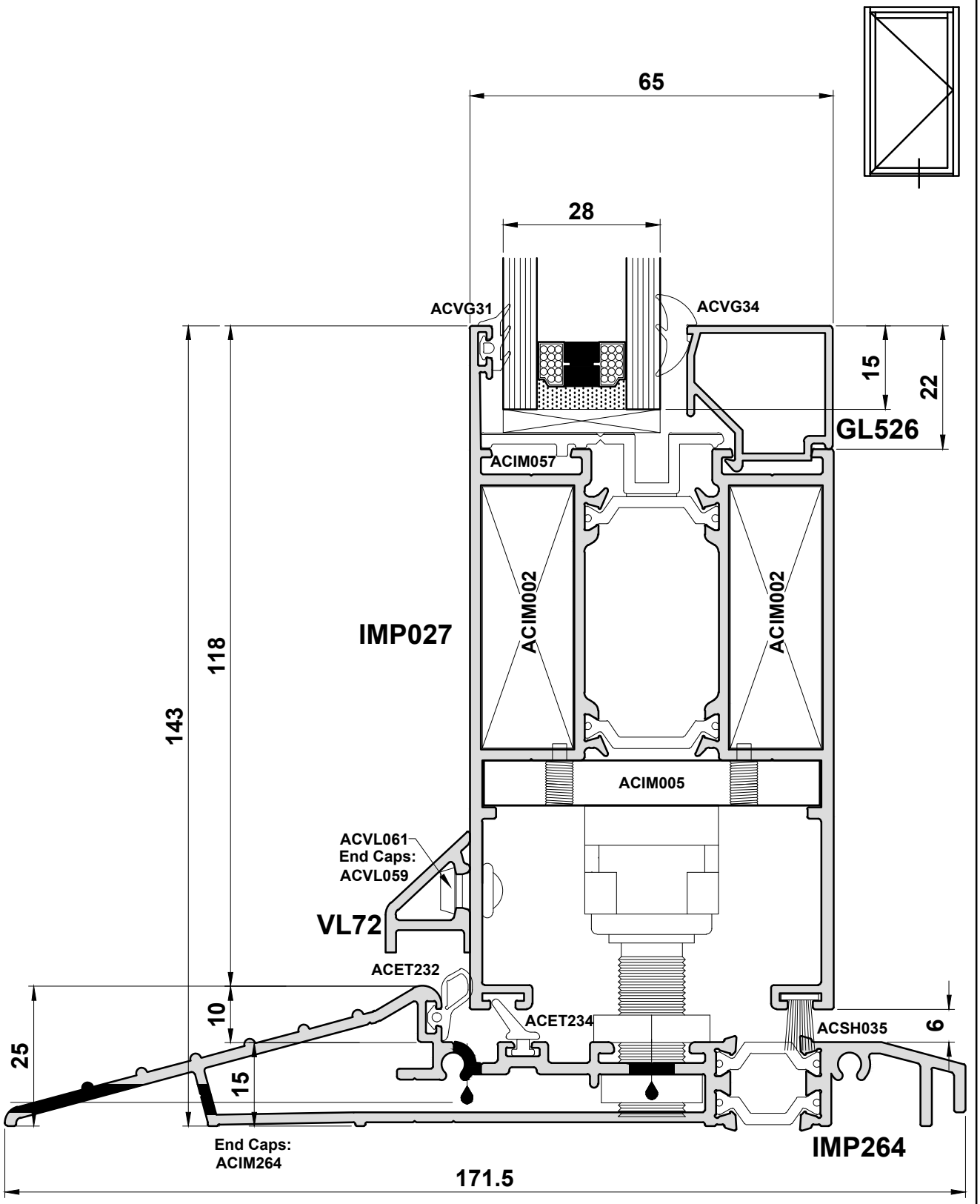

Do Not Scale From This Drawing

Detail 24A - Open Out

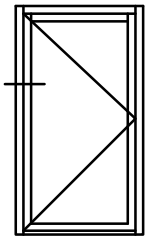

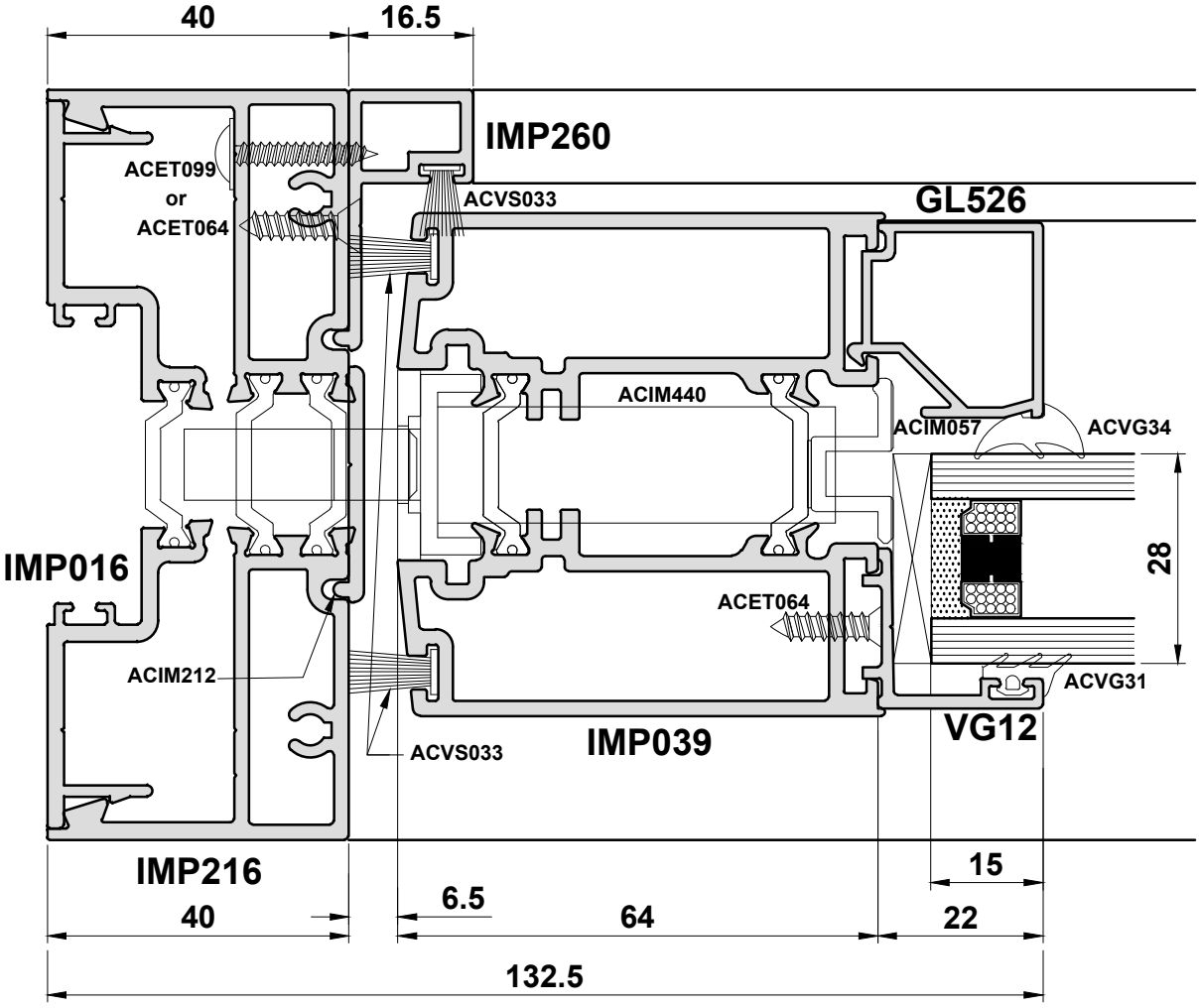

Do Not Scale From This Drawing

Detail 24B - Open Out

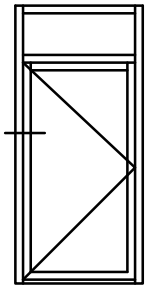

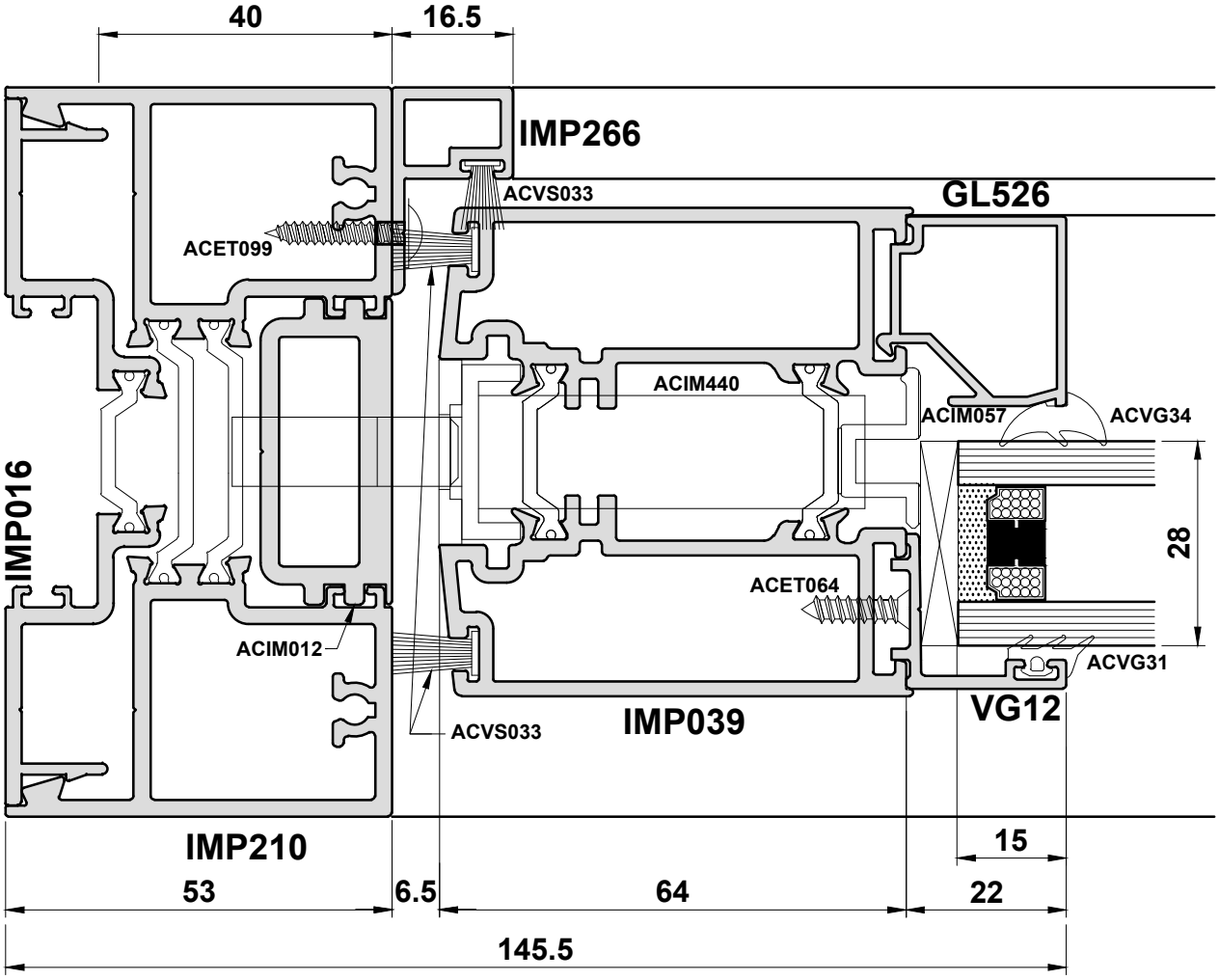

Do Not Scale From This Drawing

Detail 24 - Open In

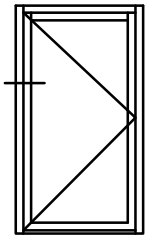

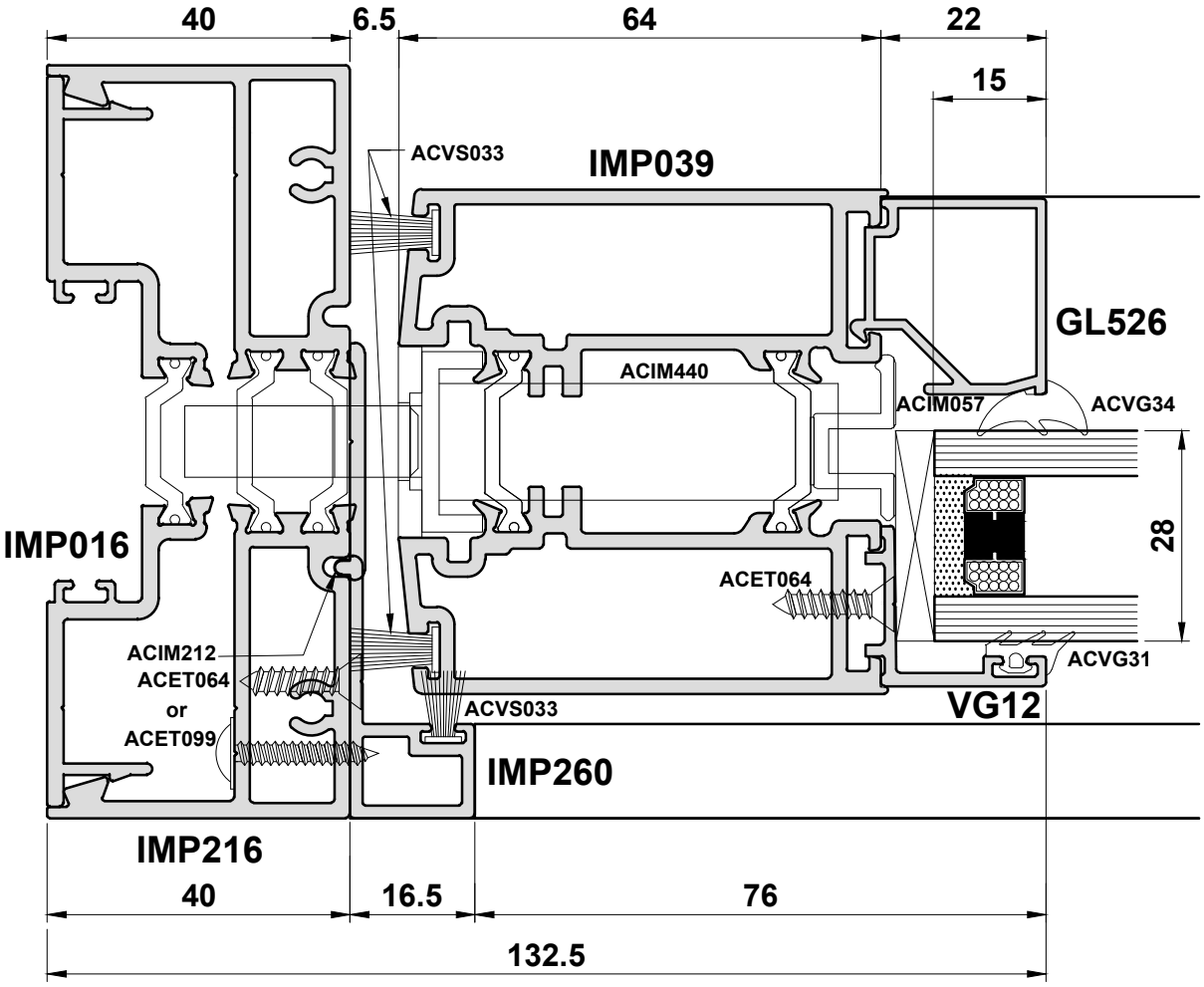

Do Not Scale From This Drawing

Detail 25A - Open Out

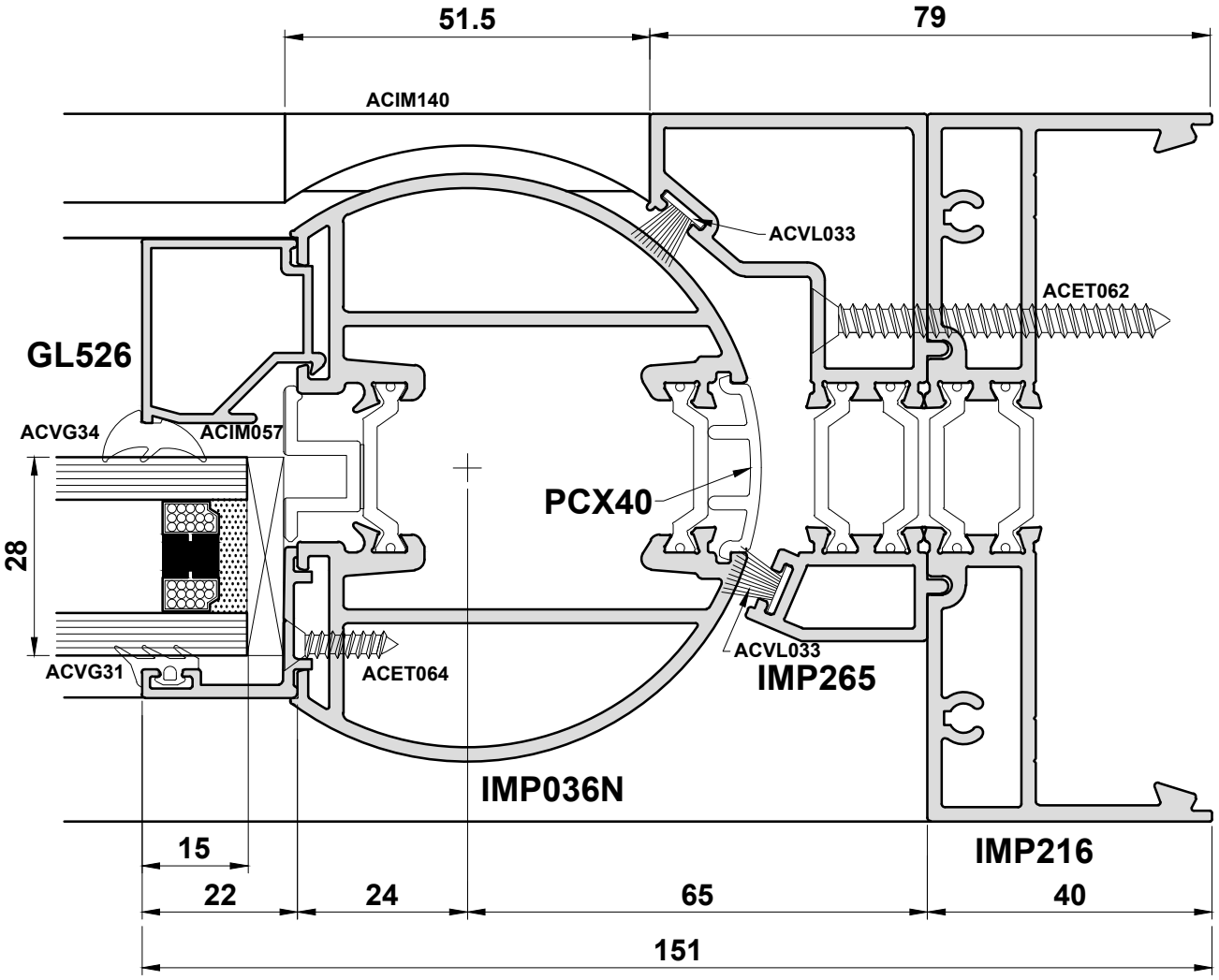

Do Not Scale From This Drawing

Detail 25B - Open Out

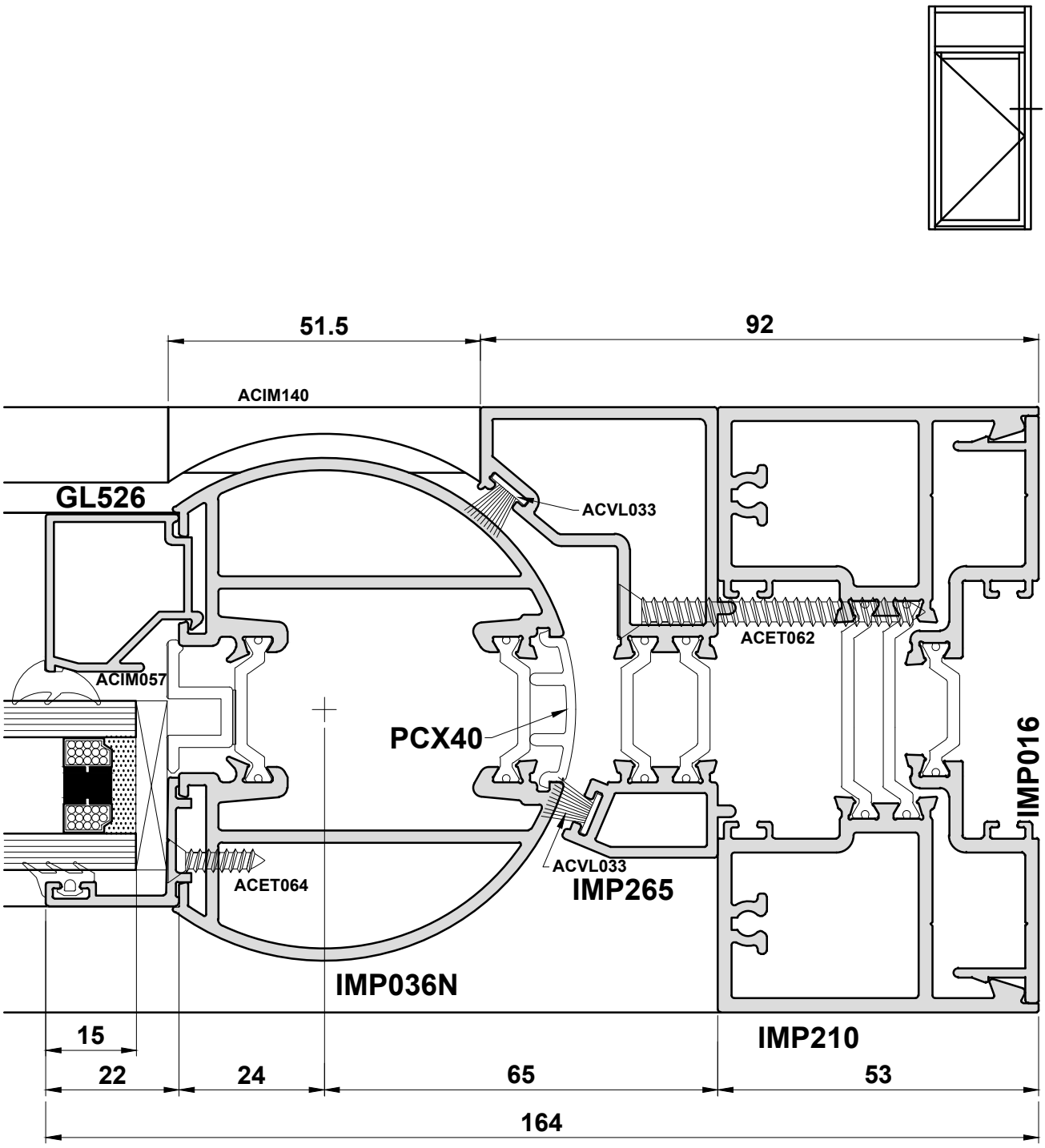

Do Not Scale From This Drawing

Detail 25 - Open In

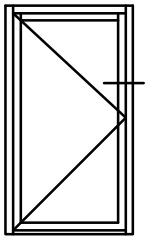

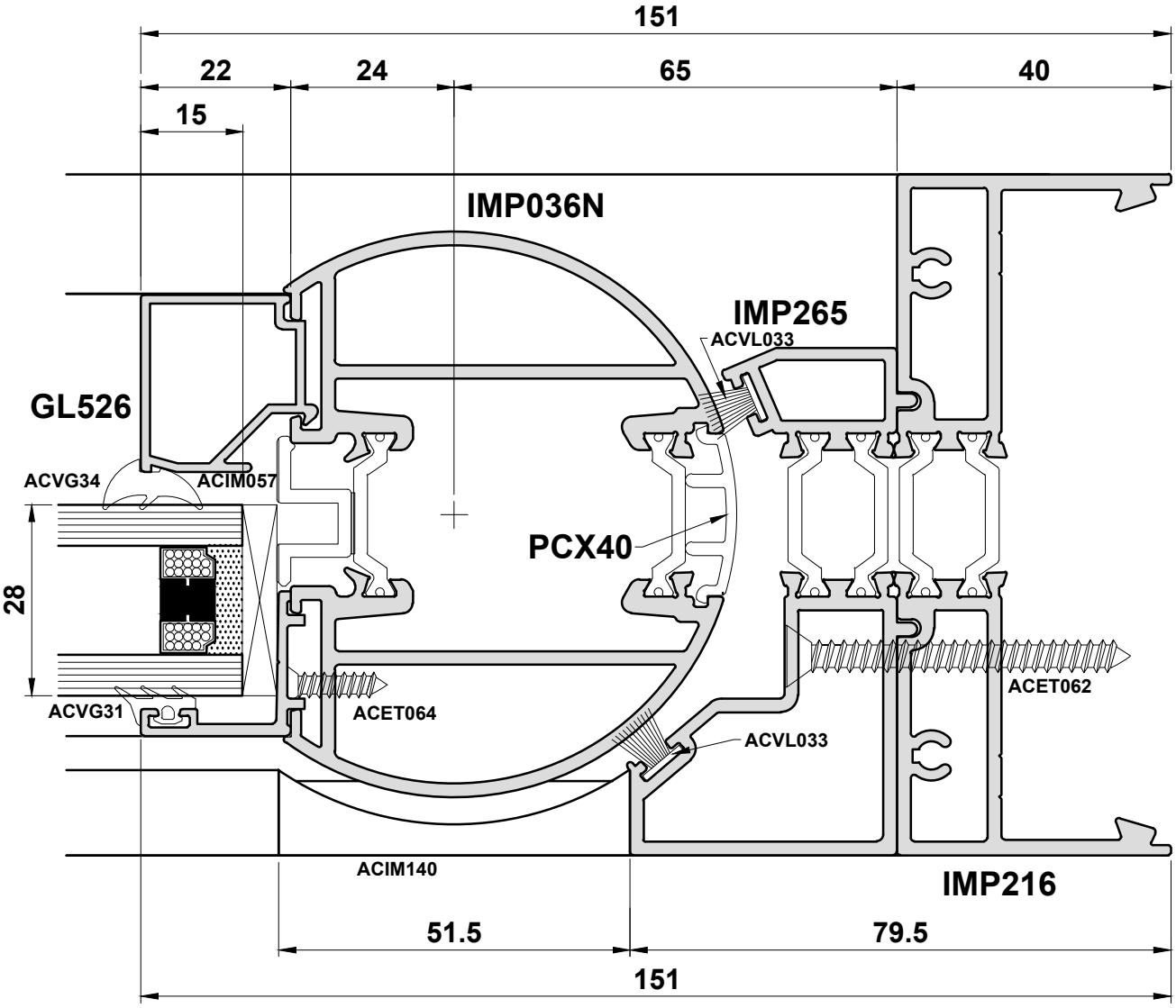

Do Not Scale From This Drawing

Detail 26 - Open Out

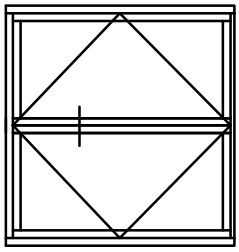

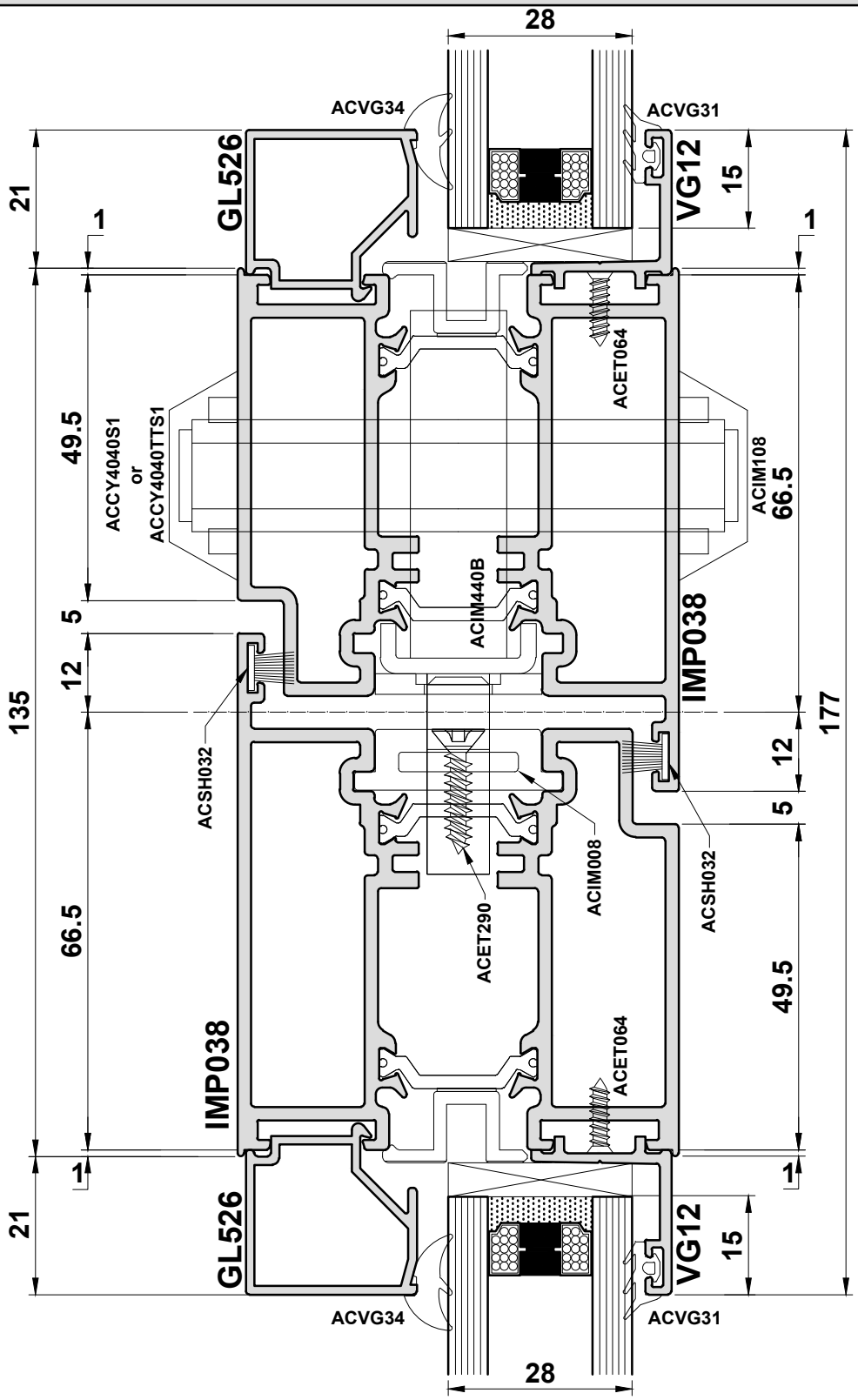

Do Not Scale From This Drawing

Detail 26 - Open In

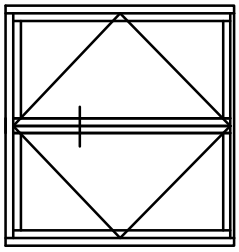

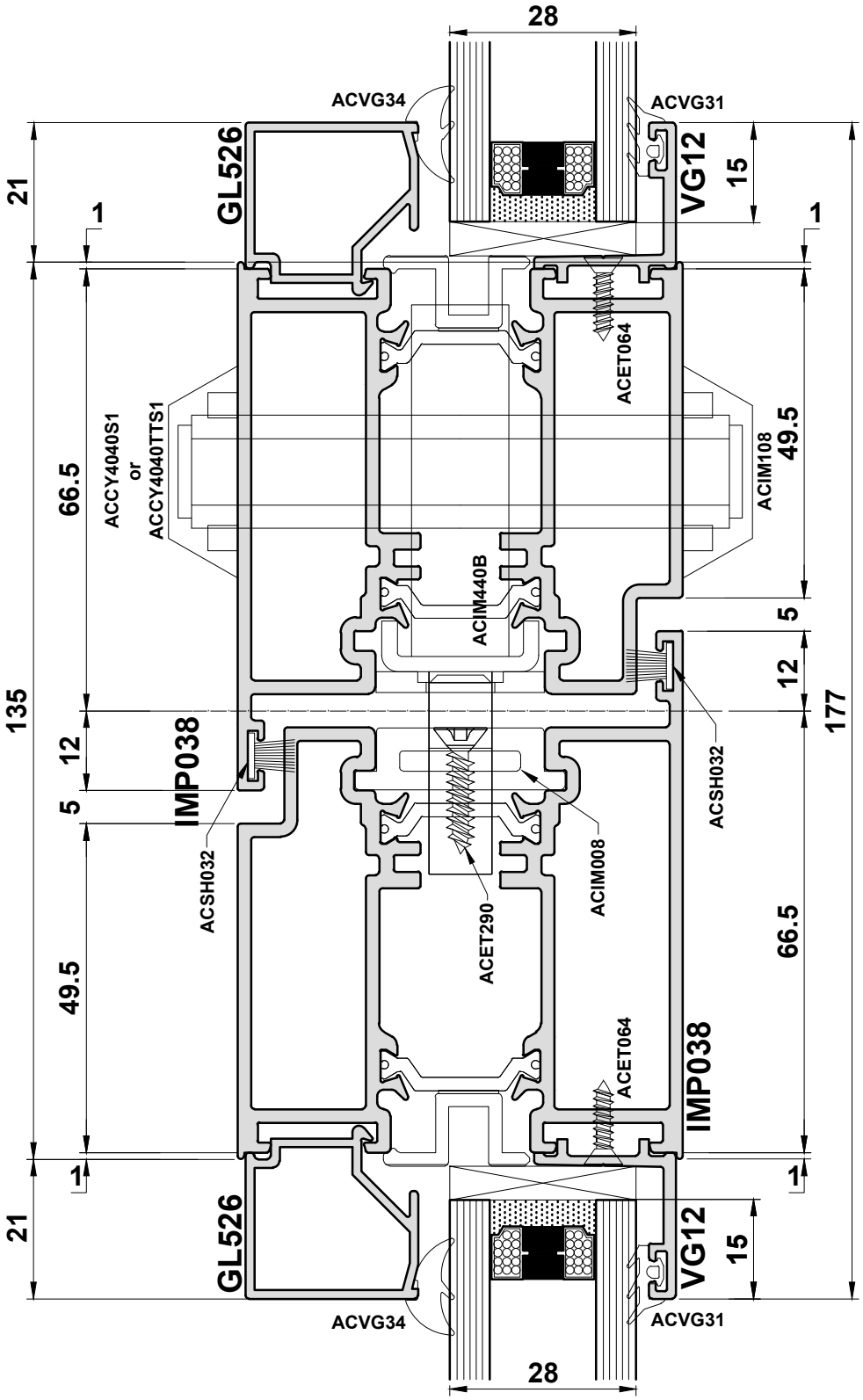

Do Not Scale From This Drawing

LPS1175 Level 2 & ENV1627 Level 3

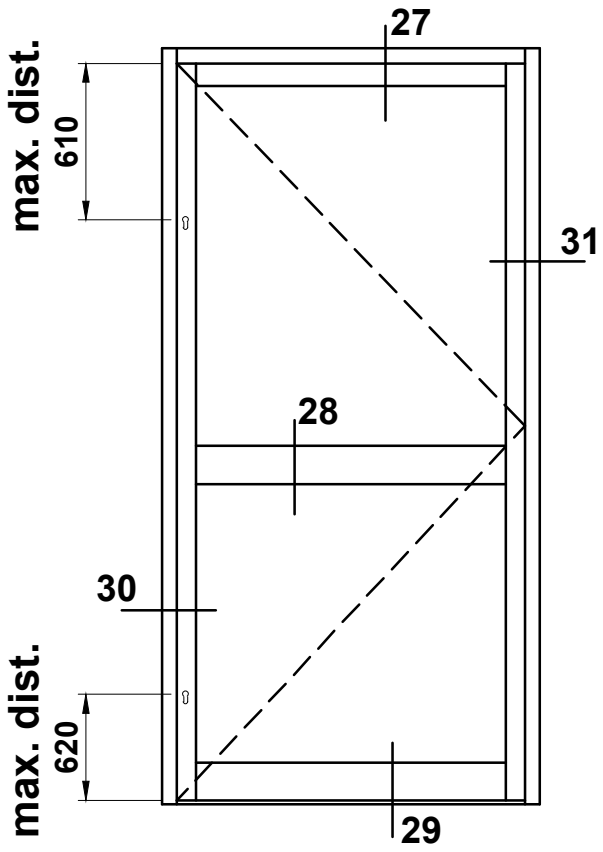

Glazing:

Outer Pane: 17mm ESG Secure Laminate
Spacer: 16mm
Inner Pane: 4mm Clear Toughened

The glazing must be ESG Secure LPS 1270 Level 1.1.2 panels incorporated in Hermetically Sealed Units. These are available from:

Essex Safety Glass Ltd:- Tel 01376 520061 Fax 01376 521176

Locks:

Two locks are required to comply with the certification. Spacing is dependant on door height. One lock is fitted as per normal, the second is fitted upside down.

Do Not Scale From This Drawing

Detail 27

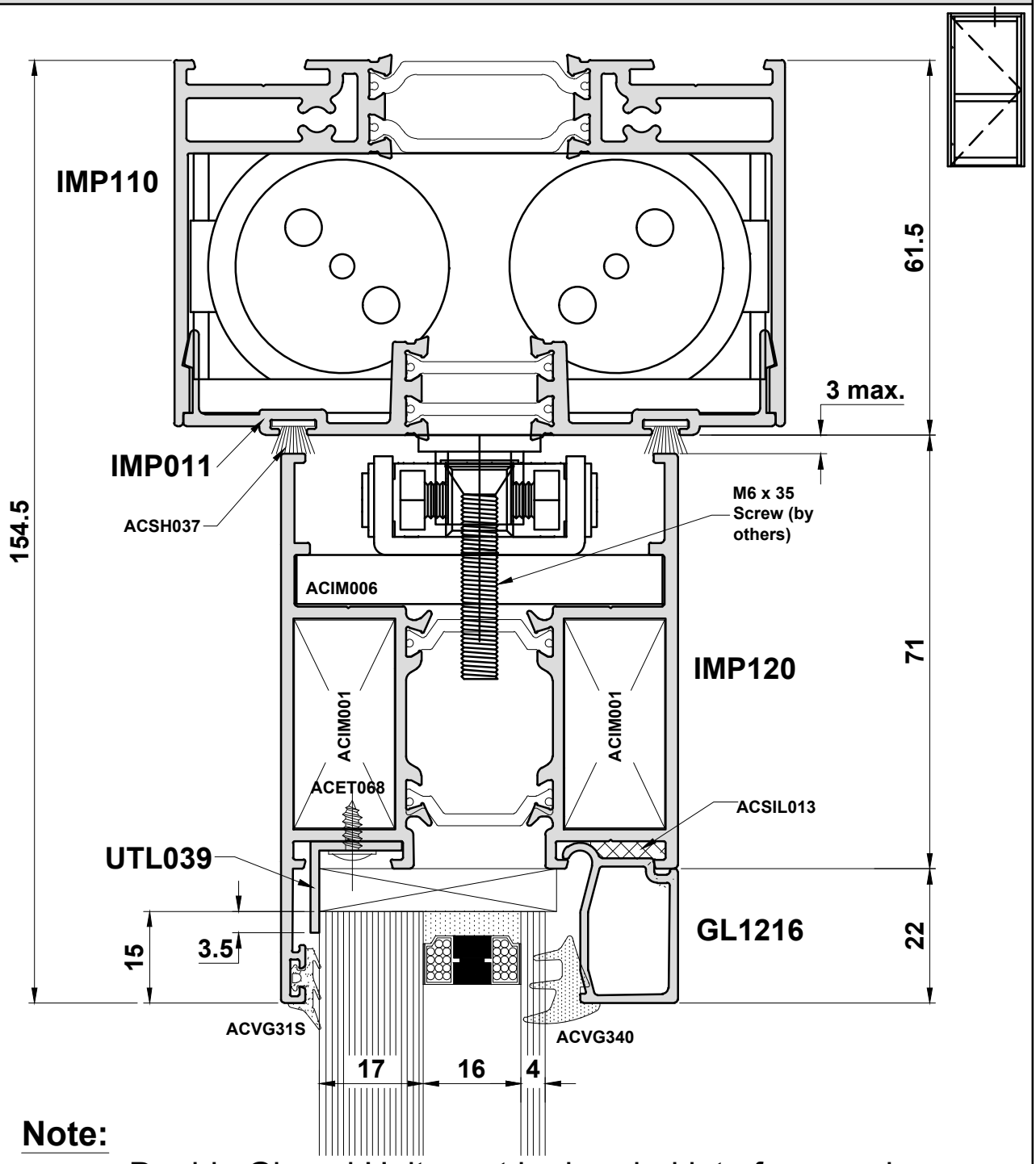

Note:

- Double Glazed Unit must be bonded into frame using a low modulus silicone compatible with unit/spacer
- UTL039 to be cut to glass width & fixed 50mm in from each end at 150mm centres

Do Not Scale From This Drawing

Detail 28

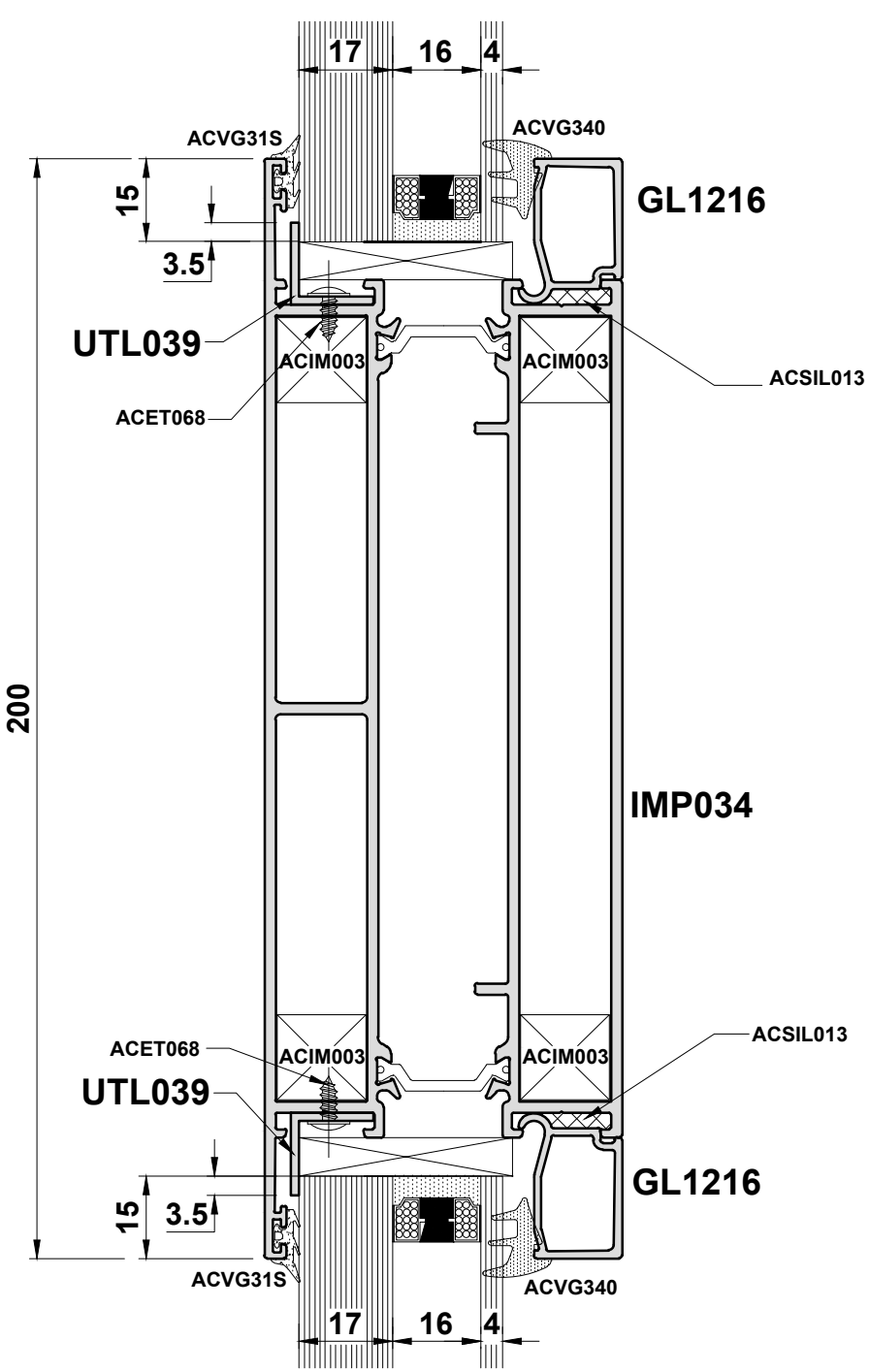

Note:

- Double Glazed Unit must be bonded into frame using a low modulus silicone compatible with unit/spacer
- UTL039 to be cut to glass width & fixed 50mm in from each end at 150mm centres

Do Not Scale From This Drawing

Detail 29

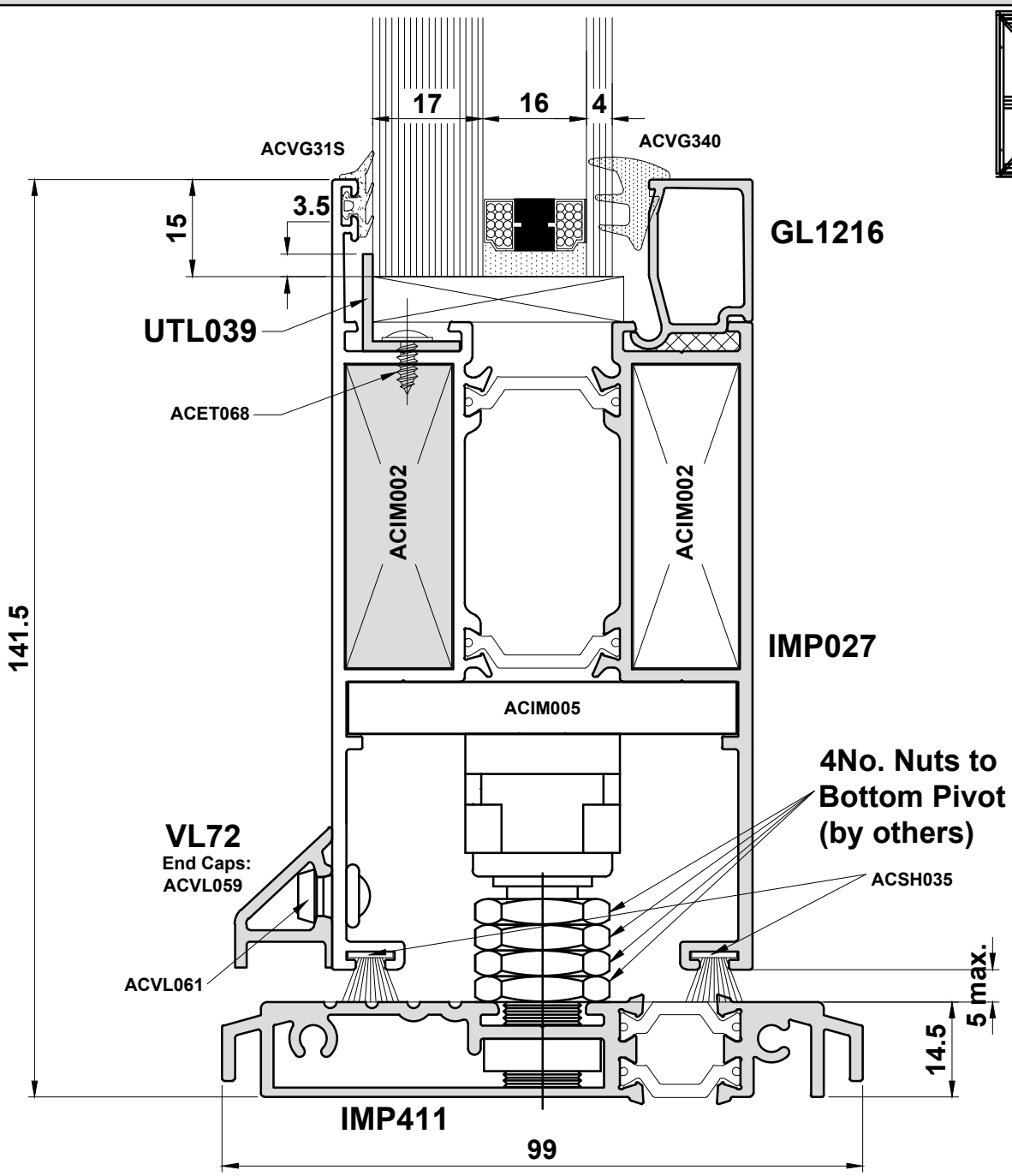

Note:

- Double Glazed Unit must be bonded into frame using a low modulus silicone compatible with unit/spacer
- UTL039 to be cut to glass width & fixed 50mm in from each end at 150mm centres

Do Not Scale From This Drawing

Detail 30

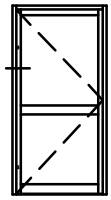

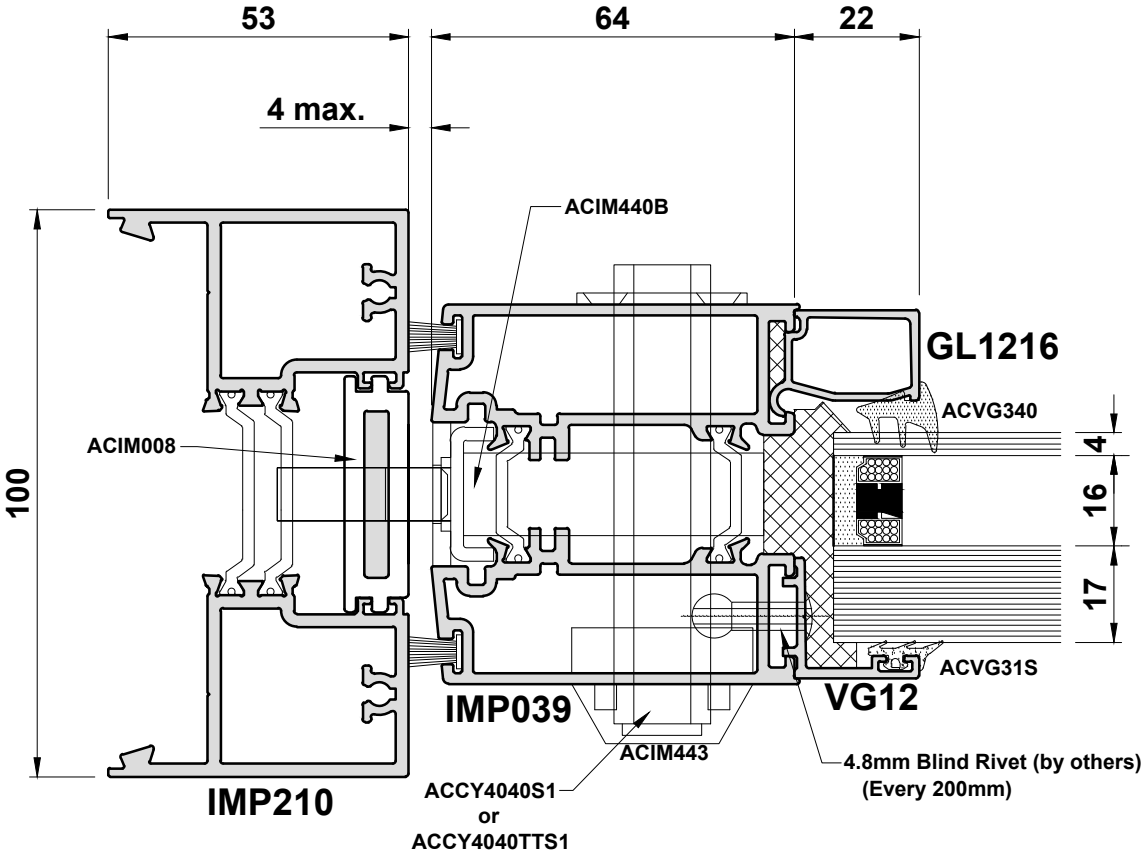

Note:

- Double Glazed Unit must be bonded into frame using a low modulus silicone compatible with unit/spacer

Do Not Scale From This Drawing

Detail 31

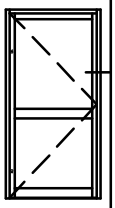

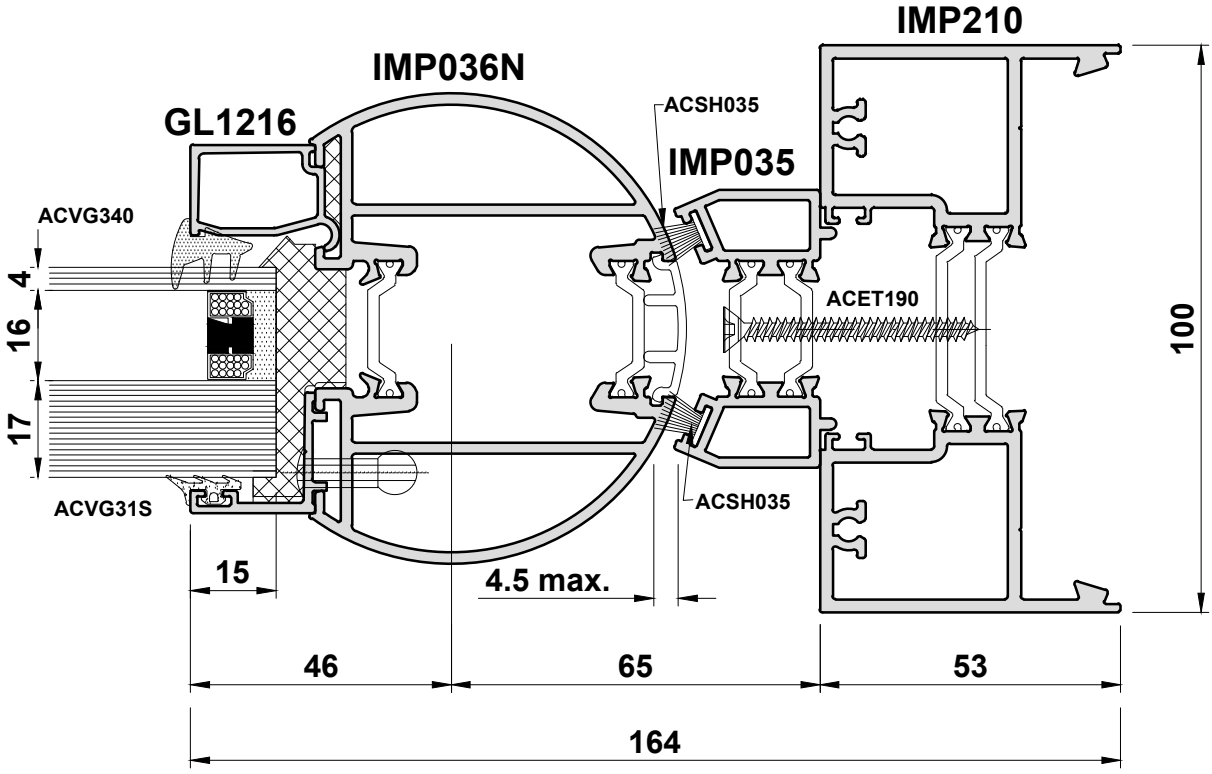

Note:

- Double Glazed Unit must be bonded into frame using a low modulus silicone compatible with unit/spacer

Do Not Scale From This Drawing

Auto Doors

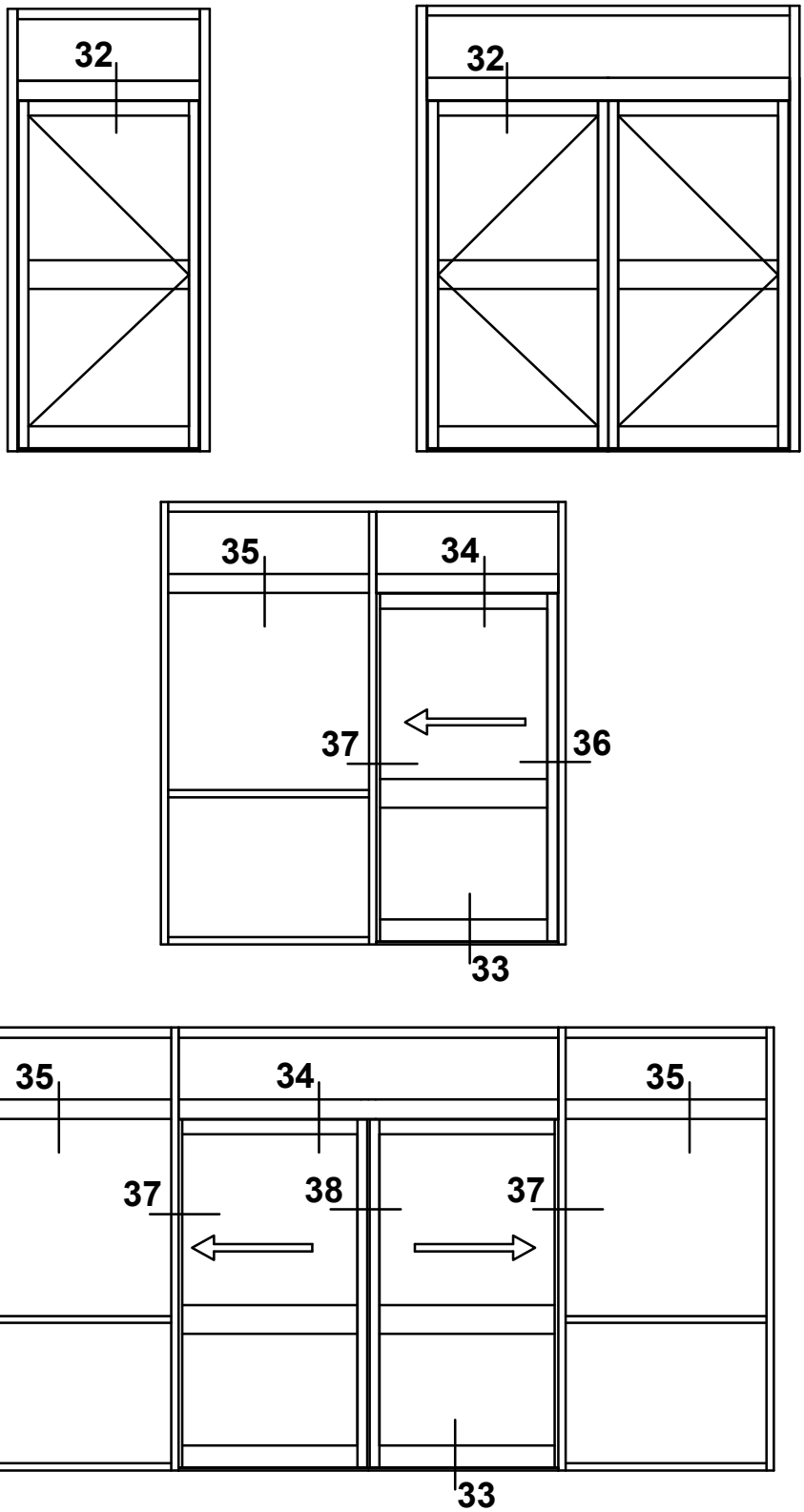

Do Not Scale From This Drawing

Smart Wall

Detail 32

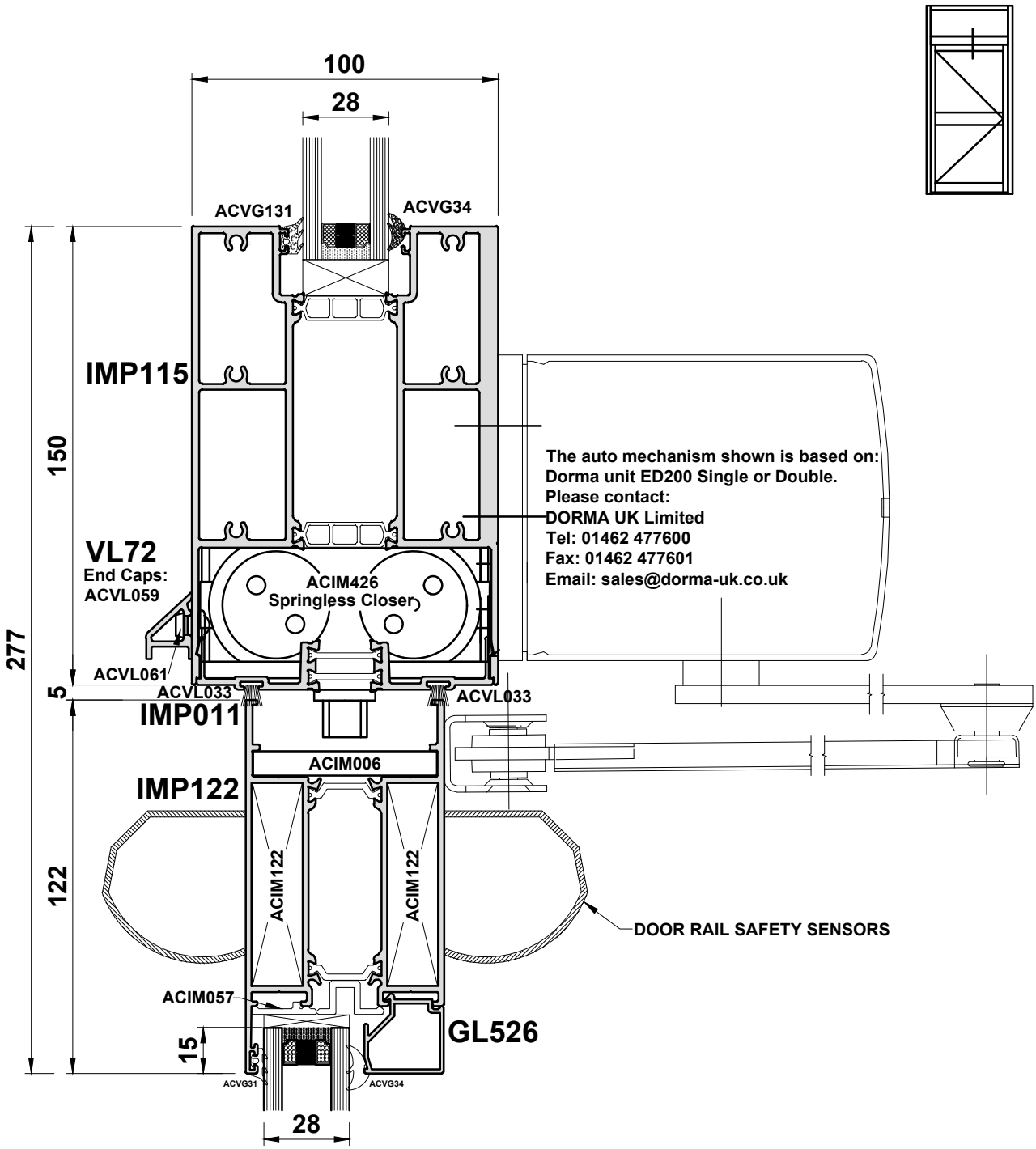

Do Not Scale From This Drawing

Detail 33

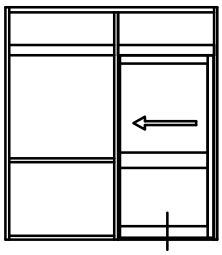

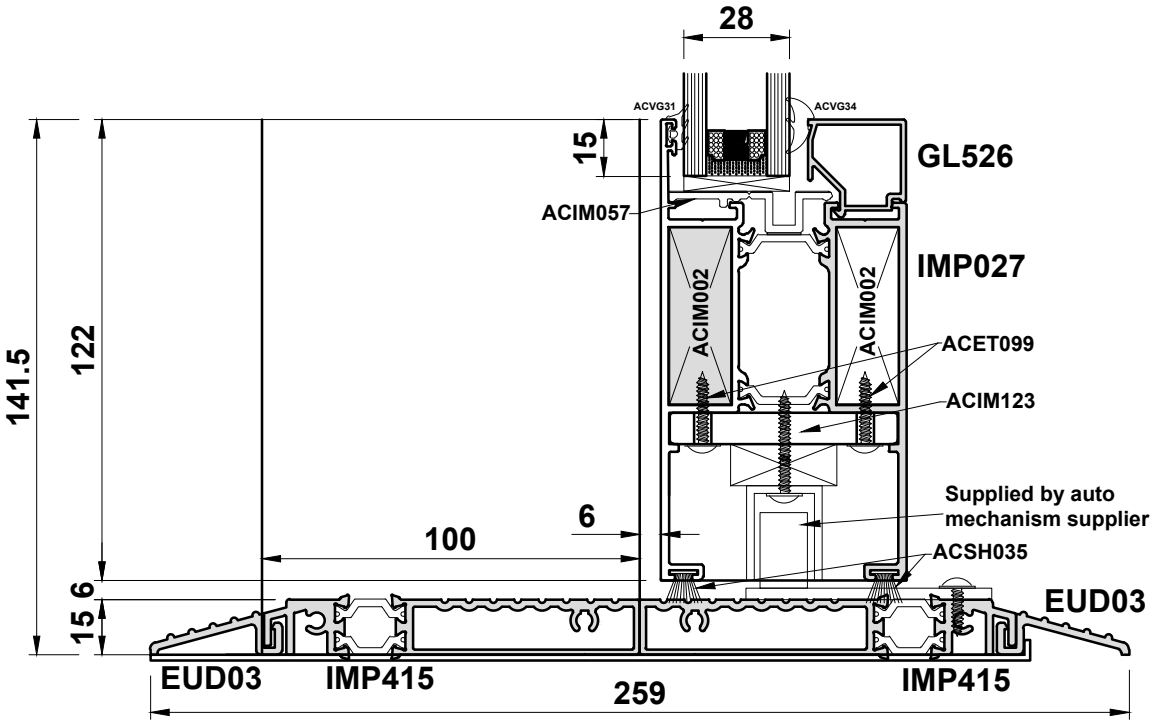

The threshold detail shown is optional and may vary to suit site condition.
Cill flashing by others. Drainage path must be considered.

Note:

- For PAS24, door guides need to be replaced with UTL032 and UTL072

Do Not Scale From This Drawing

Smart Wall

Detail 34

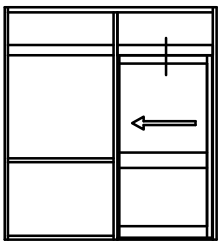

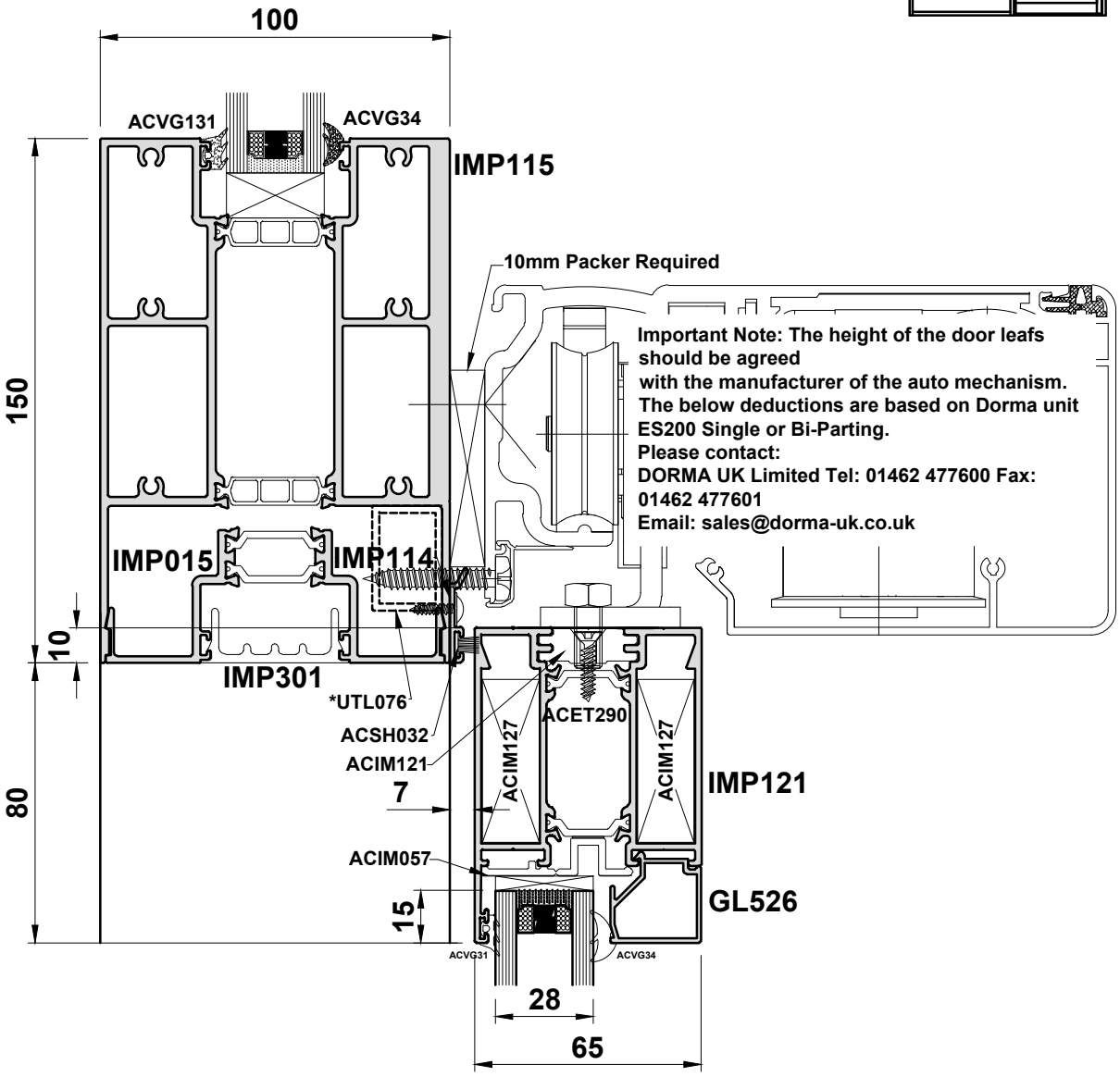

***Note:**

- For PAS24, Install UTL076 in marked location

Do Not Scale From This Drawing

Detail 35

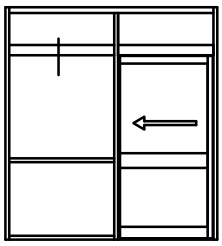

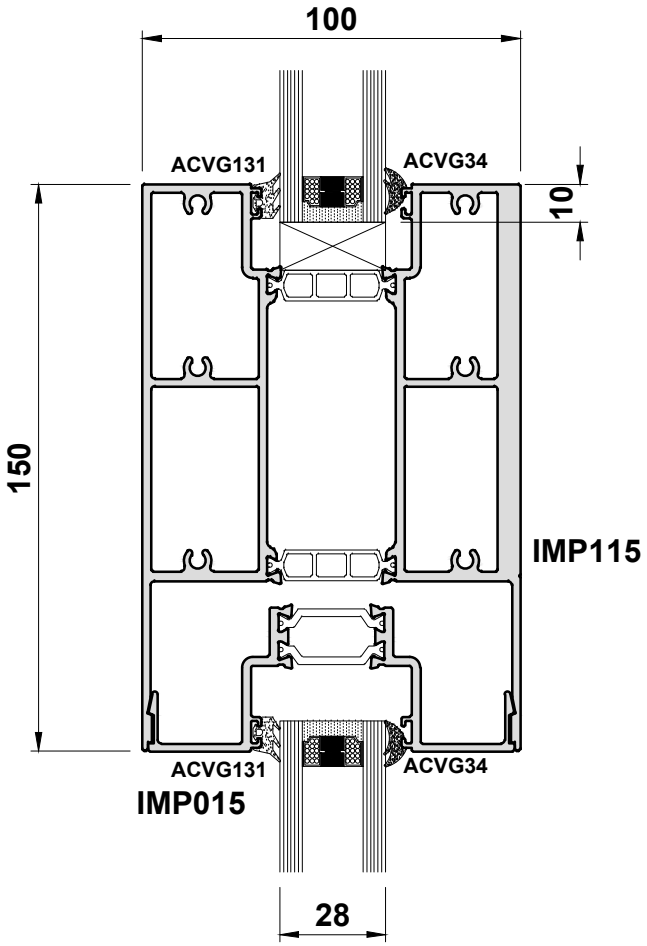

Do Not Scale From This Drawing

Detail 36A

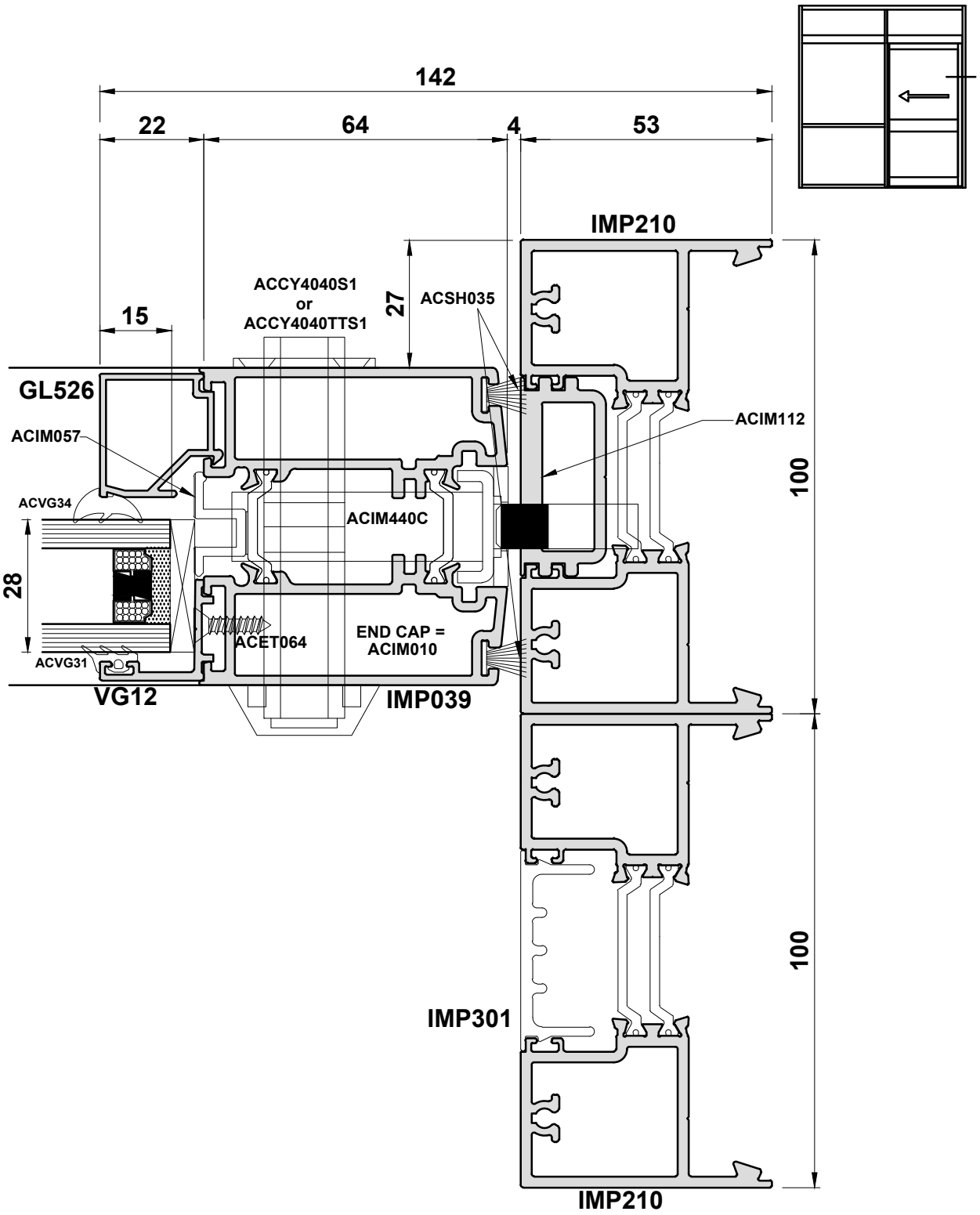

Do Not Scale From This Drawing

Detail 36B

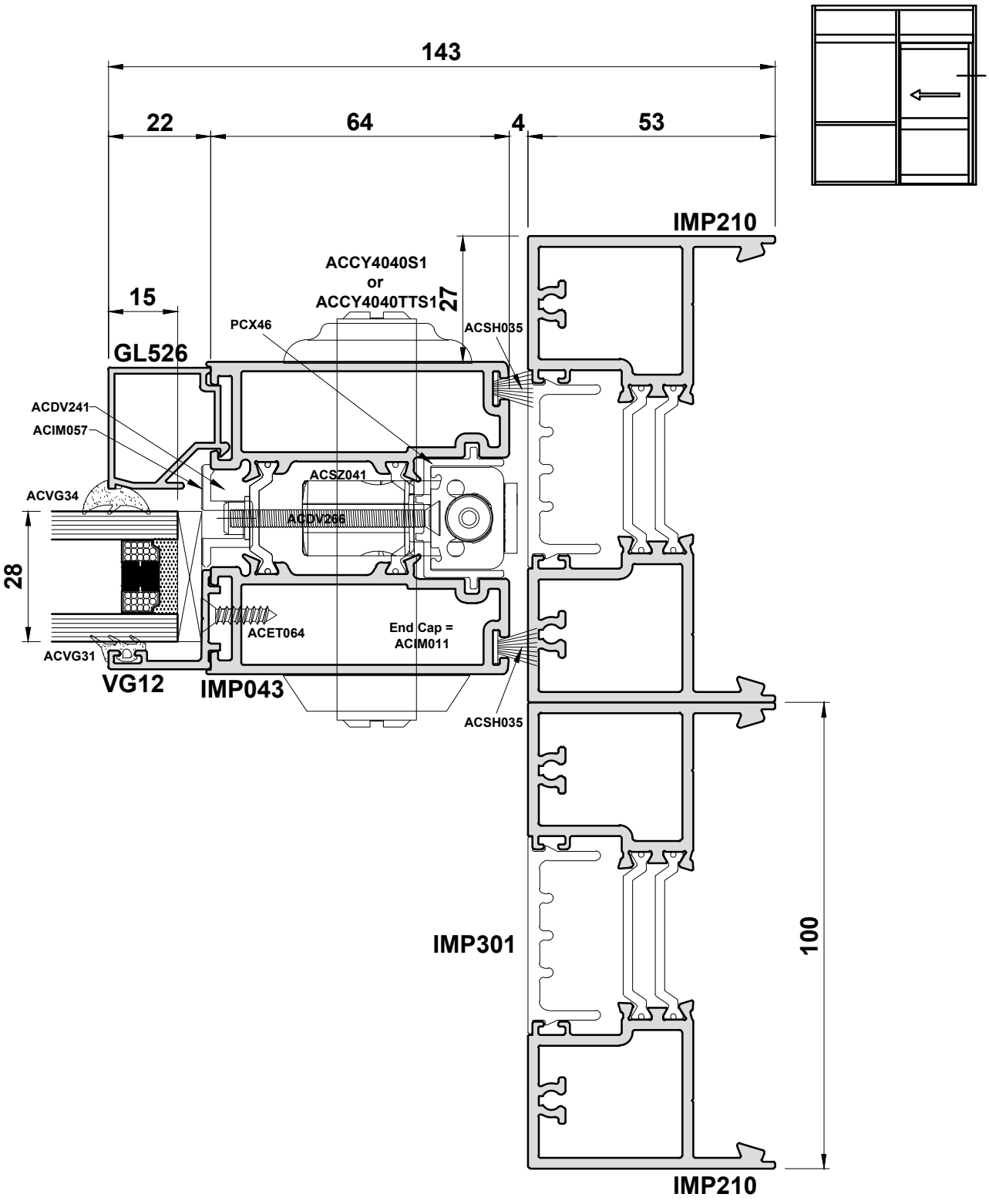

Do Not Scale From This Drawing

Detail 37

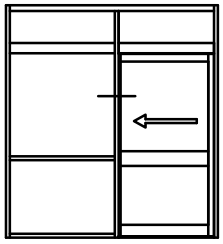

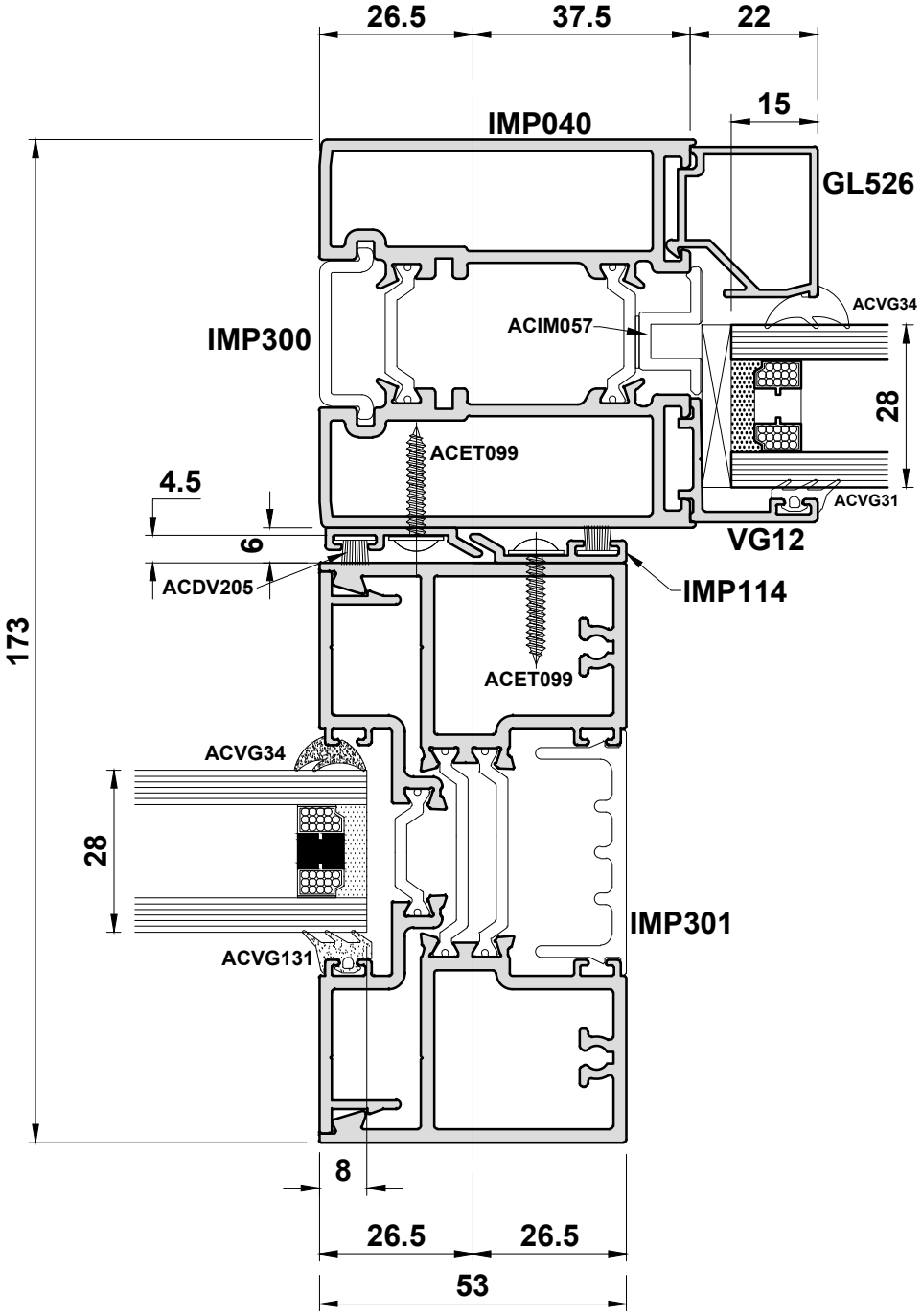

Do Not Scale From This Drawing

Smart Wall

Detail 38A

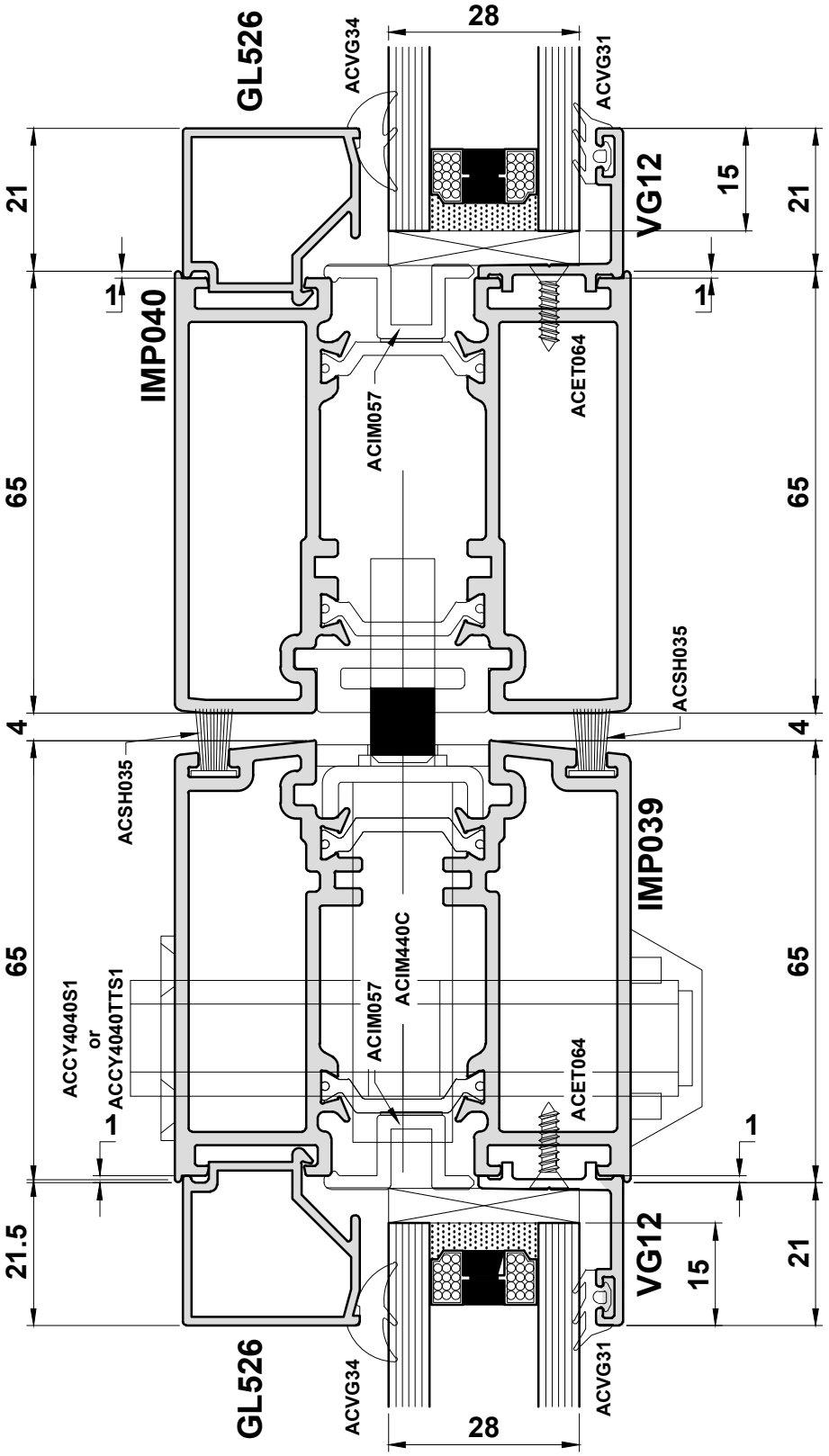

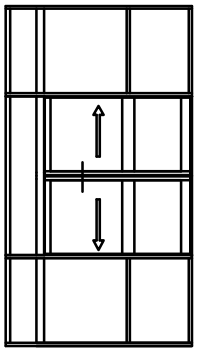

Do Not Scale From This Drawing

Detail 38B

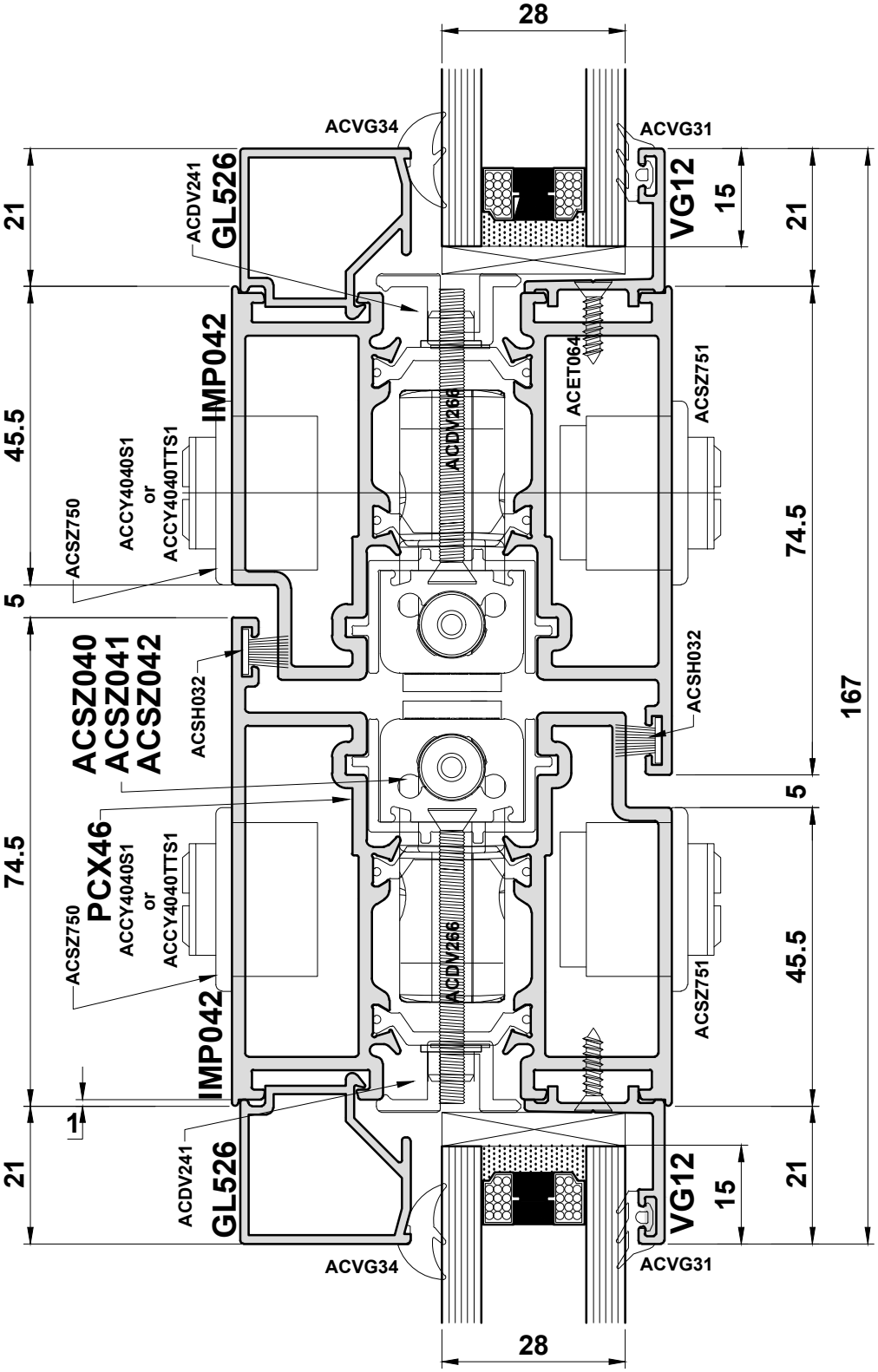

Do Not Scale From This Drawing

Section D

Statics

General Size Limitations are shown on Page A02.

For Wind Loading Limitations, Please Contact
The Technical Department - T: 01934 833100

Section D

GENERAL INFORMATION - STATICS

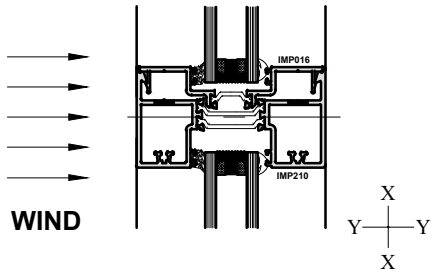

The position of the axes is an indication for the use and application of the moments of inertia (Ix and Iy) and the section modulus (Wx and Wy). We always choose the values of the axis perpendicular to the load to resist it.

- **To resist the wind loads we use the values Ix and Wx.**

EXAMPLE

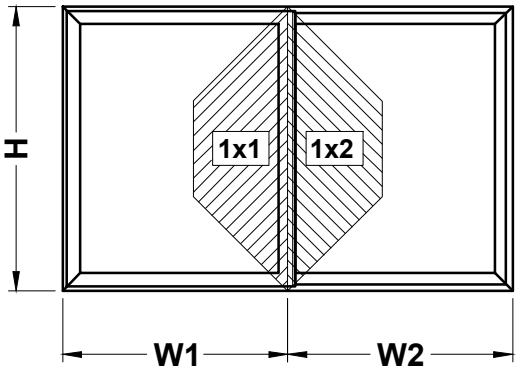

H = 240cm

W1 = 180cm

W2 = 180cm

P = 1200 Pa (wind pressure)

1) Determine Ixx value for the interlock and meeting stile (if required) using the Specification Wizard

Ixx = 111.1 cm4

2) Determine profile combinations

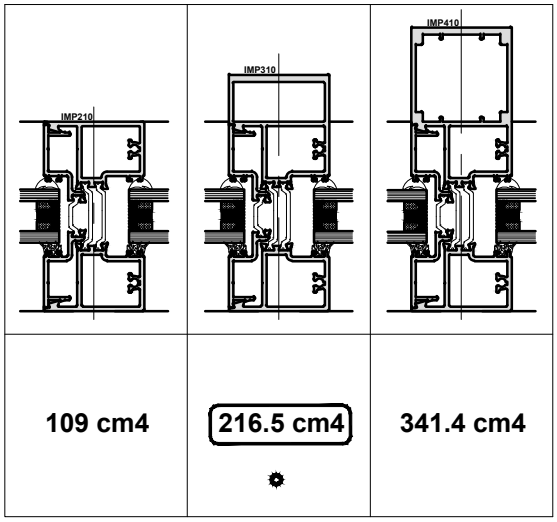

OK

Section E

E IMP

Construction Drawings - Open Out

Screen Assembly..... E03 - E05
Door Assembly..... E06 - E08
Lock Preparation..... E09 - E12
Door Closer Assembly..... E13 - E16
Rebated Door..... E17 - E19
Hinge Fixing..... E20
Glazing Chart..... E21 - E22
Drainage Tray..... E23
Panic Bars..... E24 - E25
Opening Sash Inserts..... E26
Clear Opening Calculations..... E27
High Security Details..... E28 - E37
Example Layout..... E38

Screen Assembly & Glass Deductions Option A

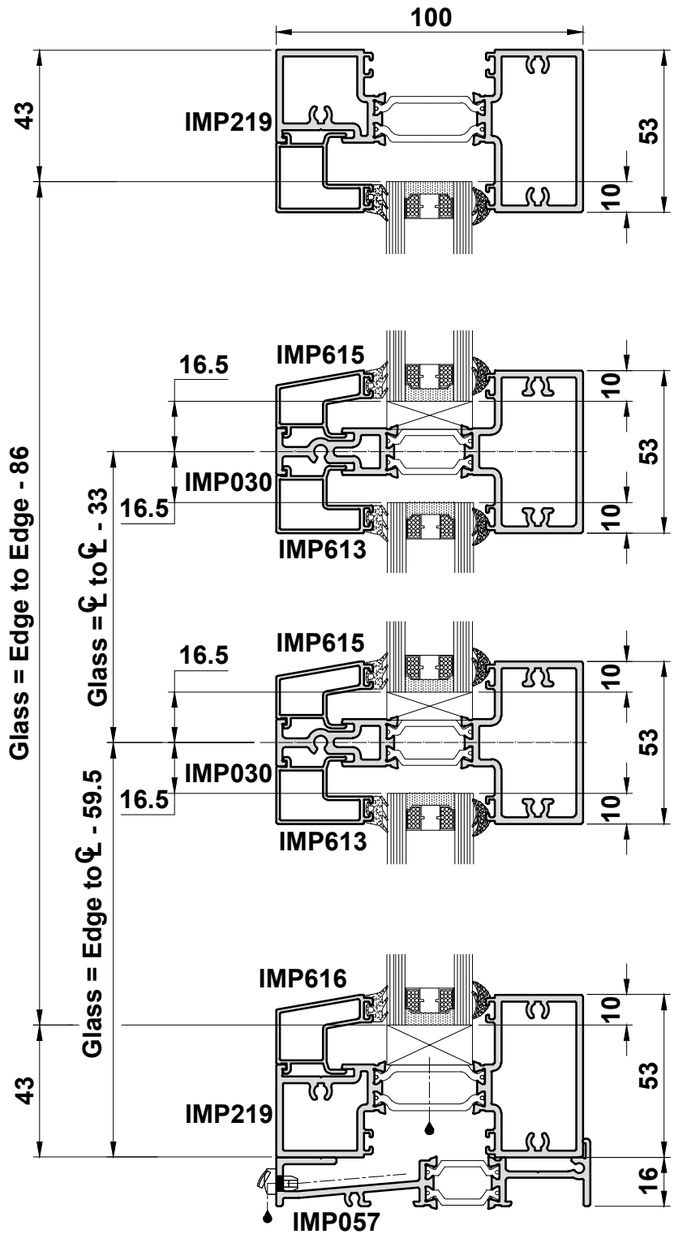

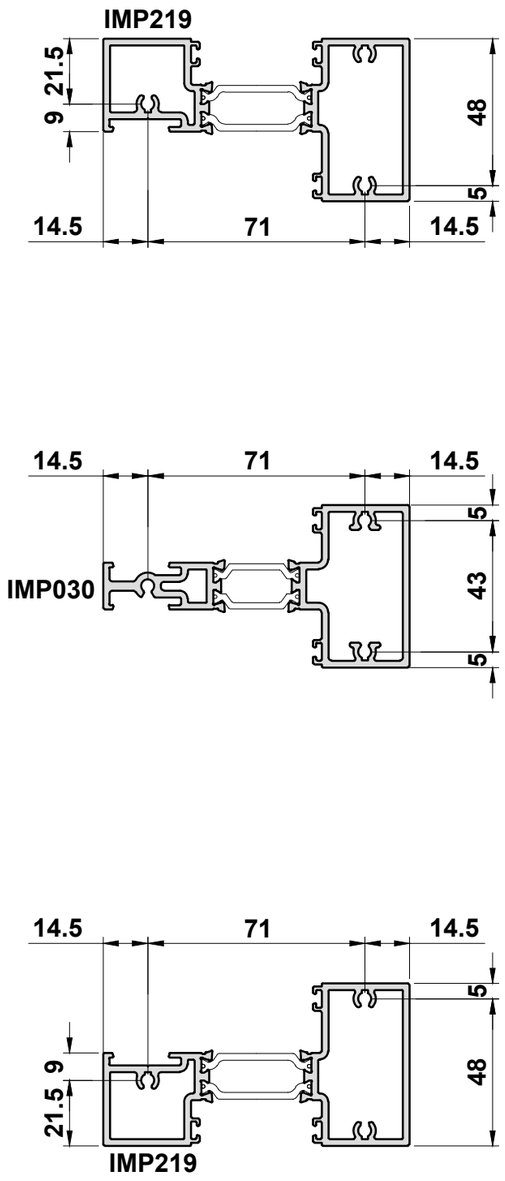

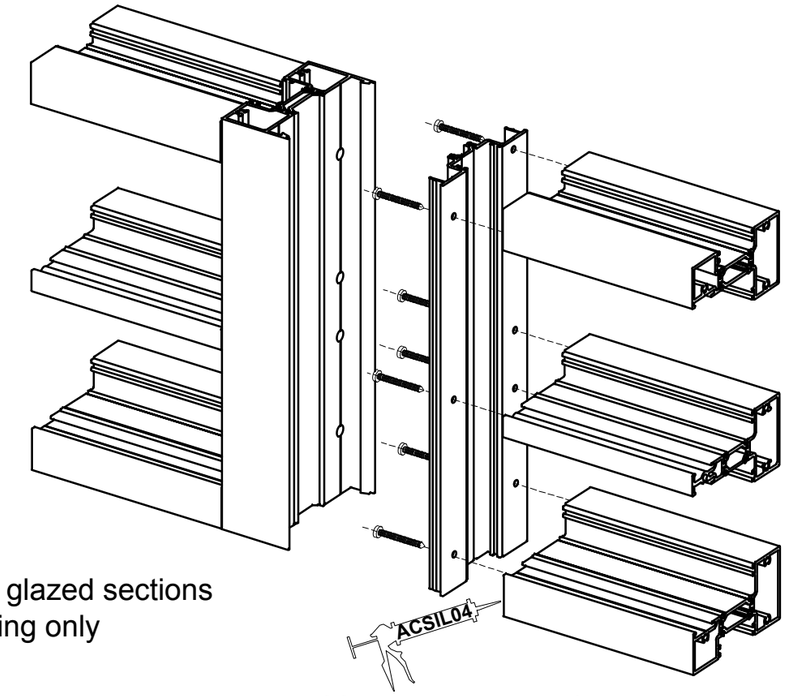

Note:
Smart Wall shuffle glazed sections are for 28mm glazing only

Apply ACSIL04 to cut edge of all transoms prior to assembly

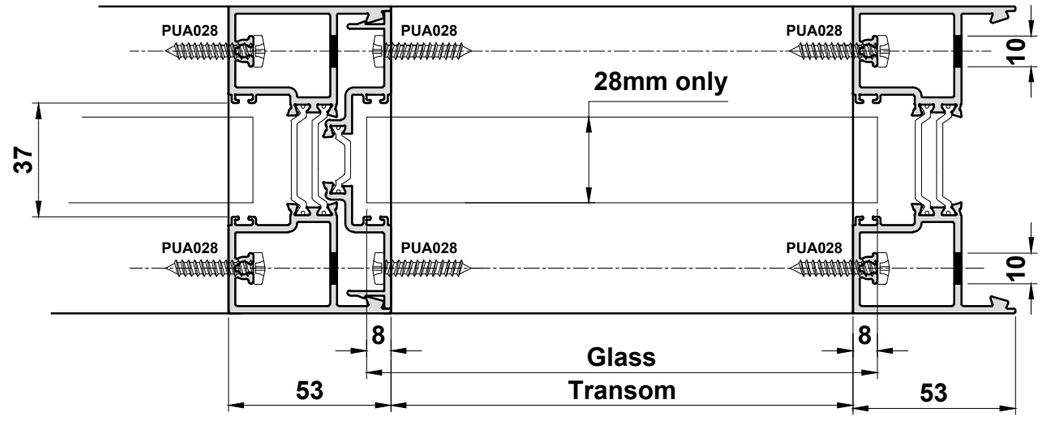

Do Not Scale From This Drawing

Screen Assembly & Glass Deductions Option B

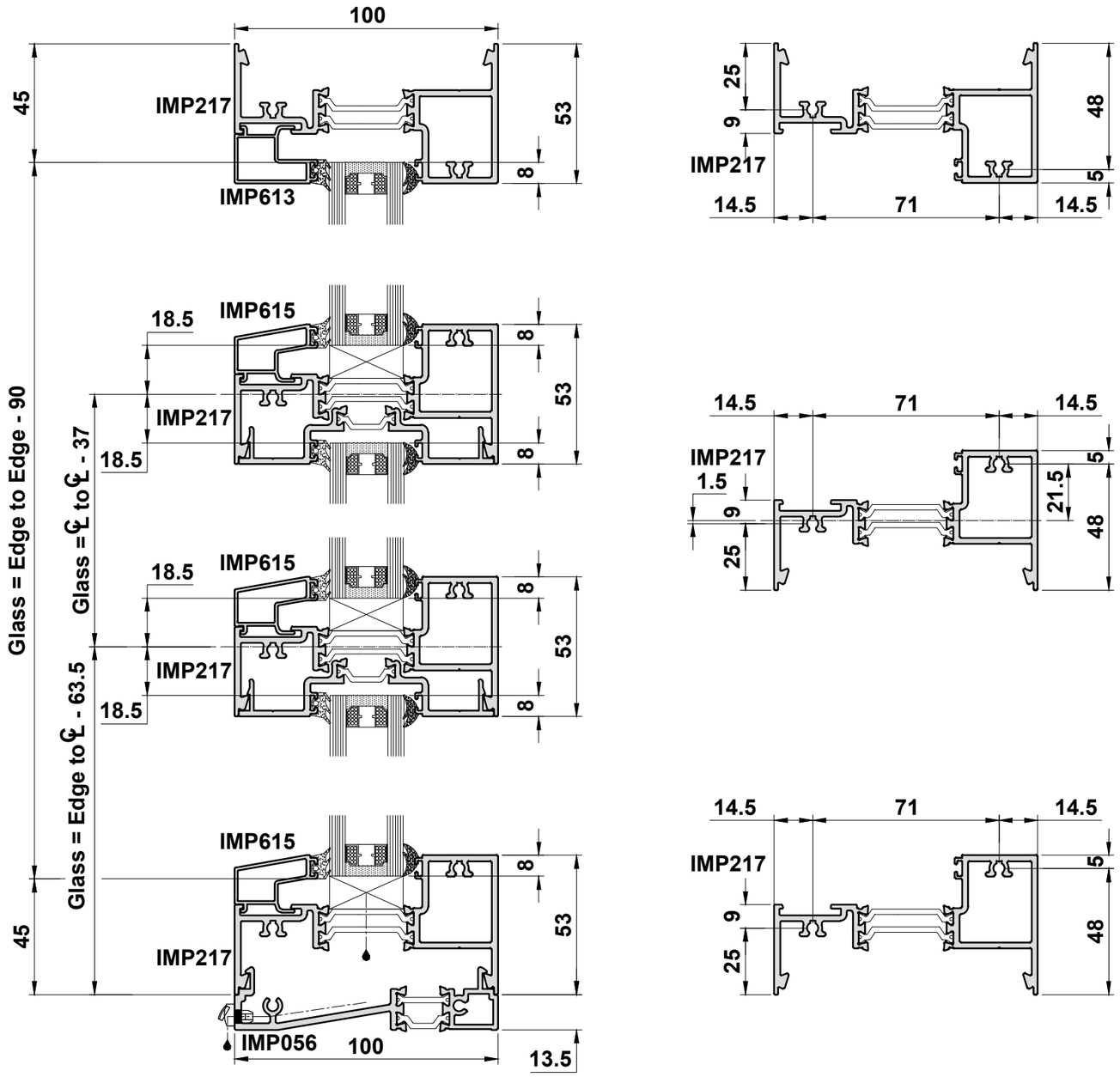

Do Not Scale From This Drawing

Fixing IMP034 into Pocket Glazed Screen

ACIM025

Cleat A: Inside Cleat

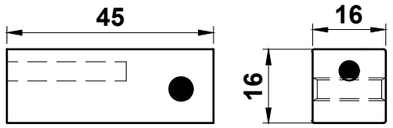

Cleat B: Outside Cleat

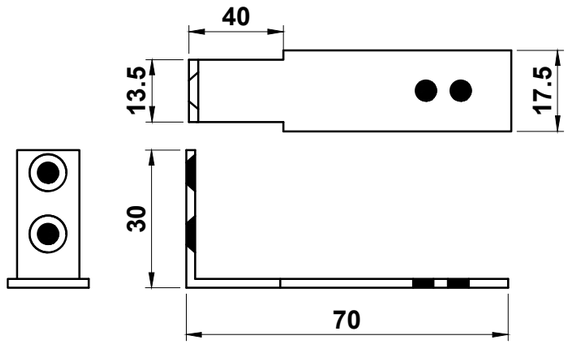

ACIM025 (PACKS 24)

Cleats fitted to frame/rail in workshop. Screws through Outer Cleat B (into pocket) can only be fixed on site for frames that need to be coupled as screw penetrates both pocket walls. One screw only into Polyamide for back to back frames to avoid clashing (holes staggered).

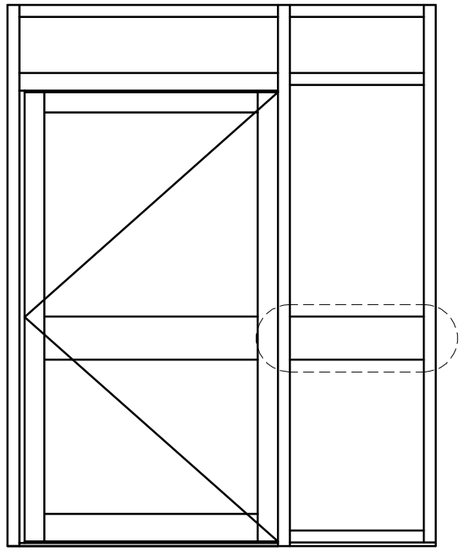

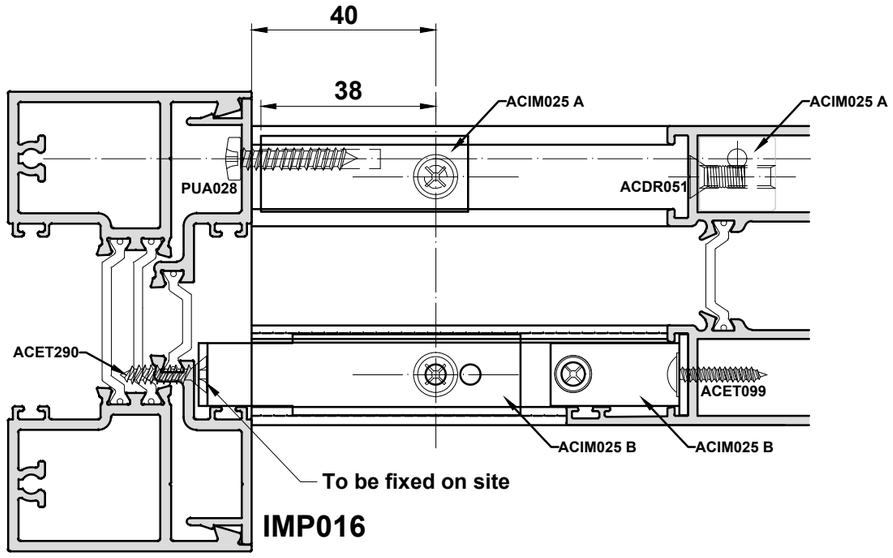

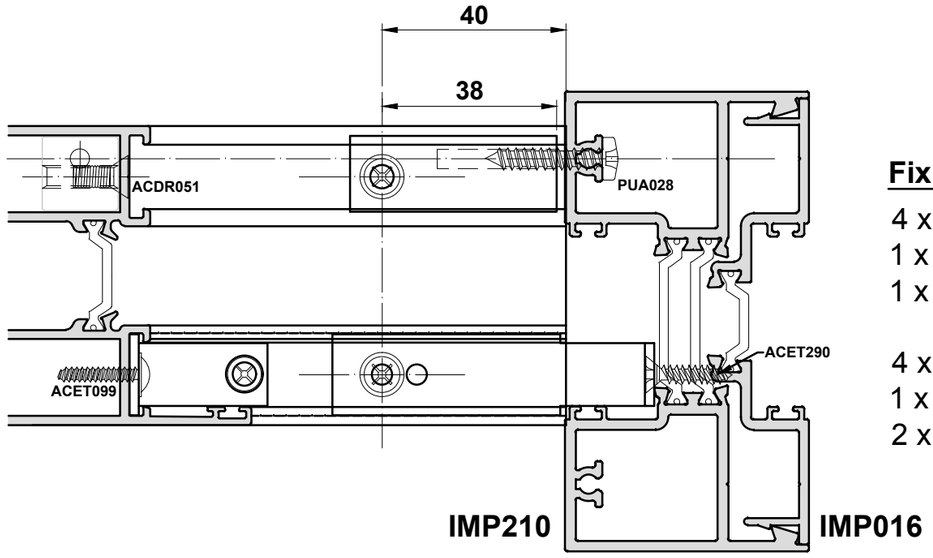

Fixings

4 x Bracket A:
1 x PUA028
1 x ACDR051

4 x Bracket B:
1 x ACET290
2 x MUA026SSZ

Do Not Scale From This Drawing

Door Assembly

Important Note:
Do not over tighten the socket set screw (dog point)

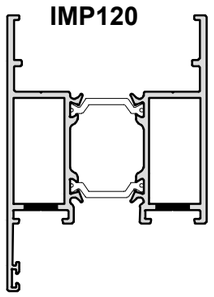

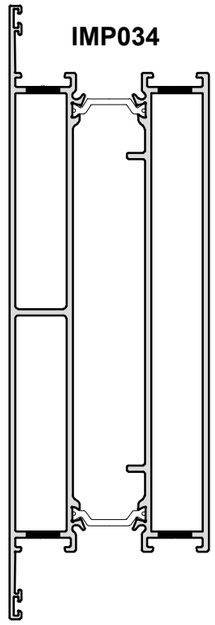

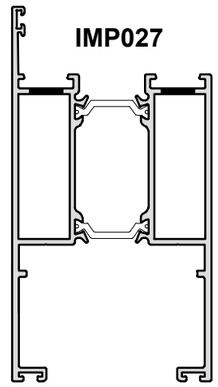

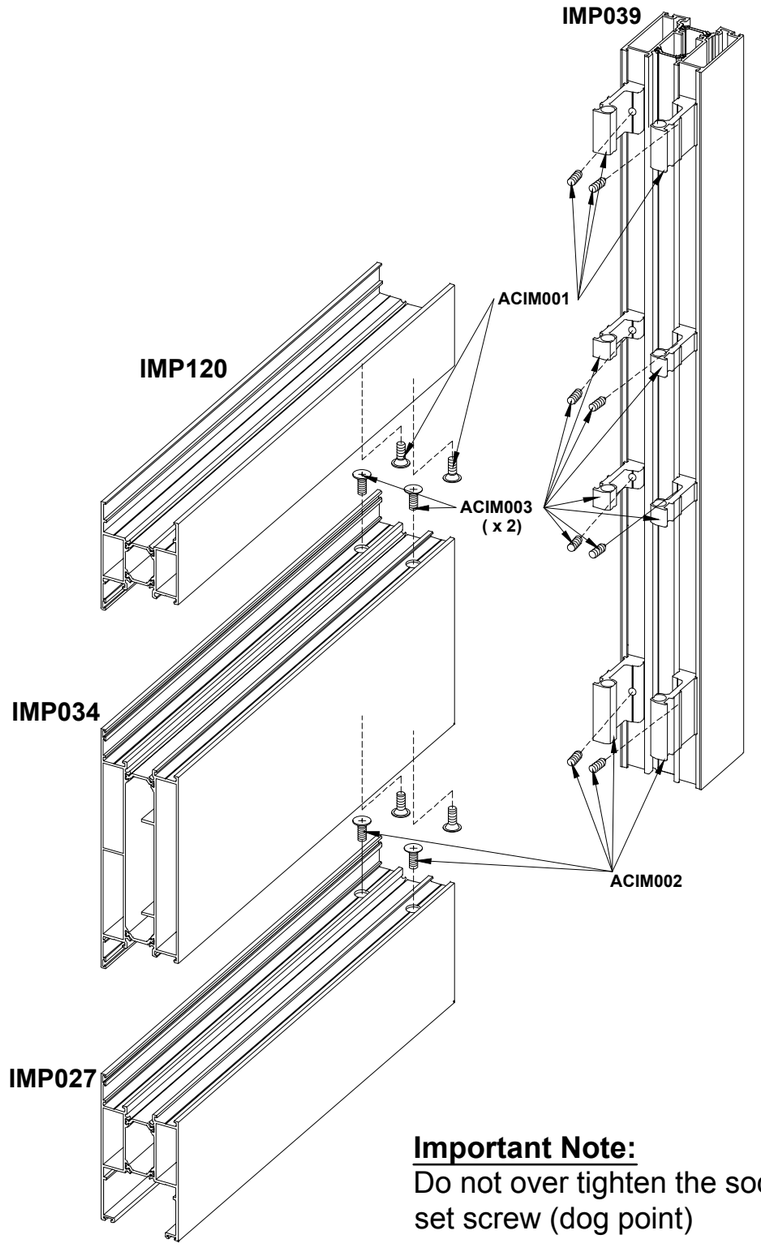

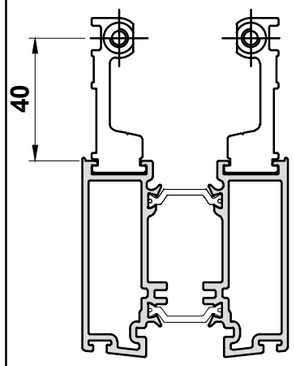

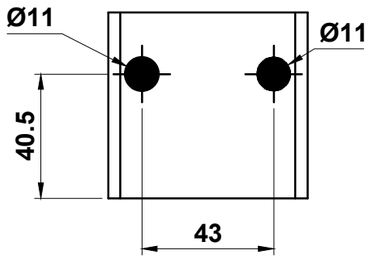

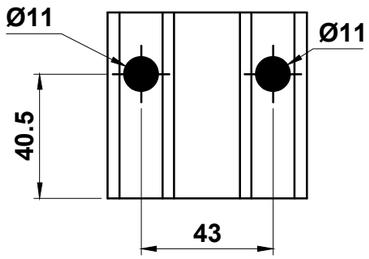

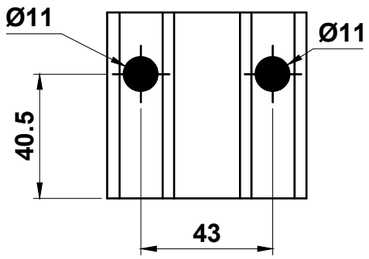

To Ensure Accuracy
Use recommended
Drill Jig - **ACIM901A**

Important Note:
Do not over tighten the socket set screw (dog point)

Do Not Scale From This Drawing

Door - Side Screen Coupling

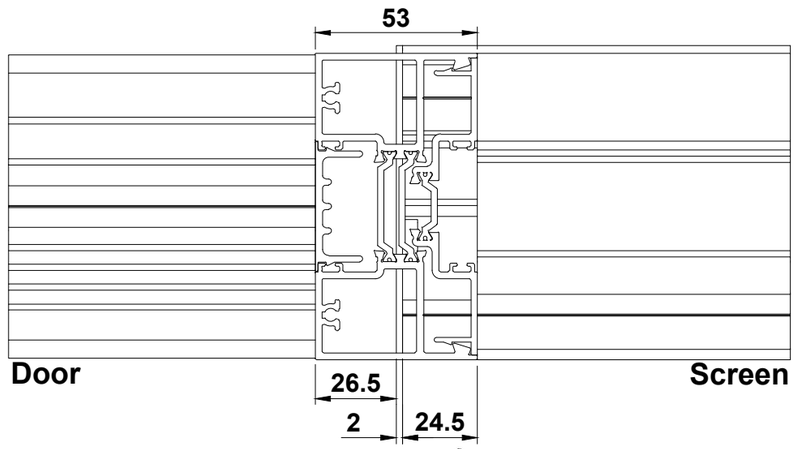

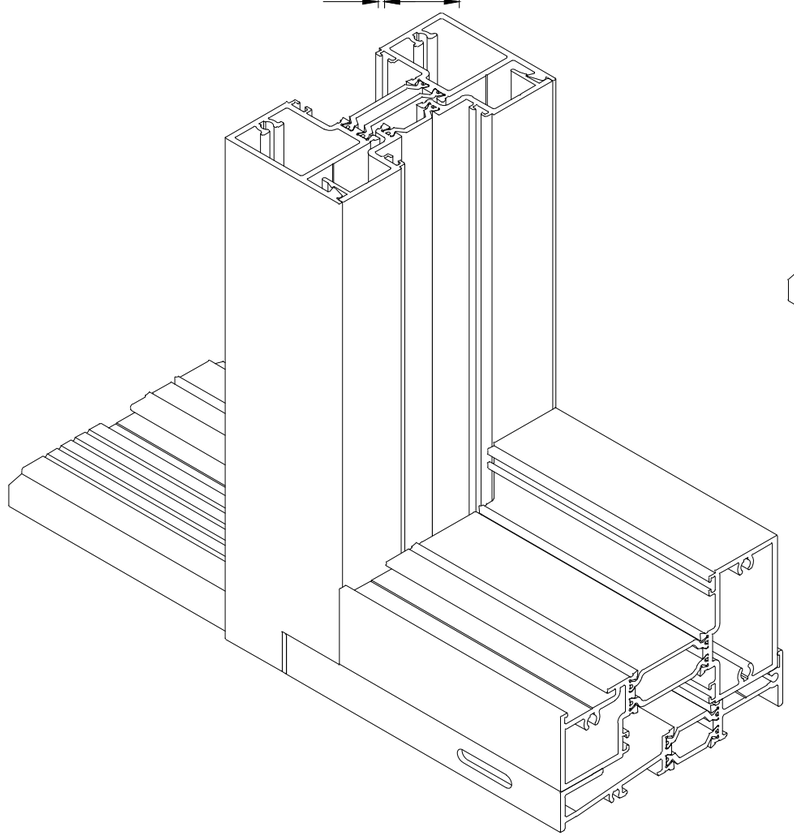

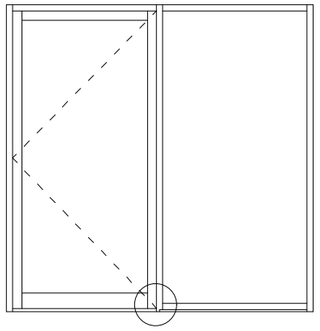

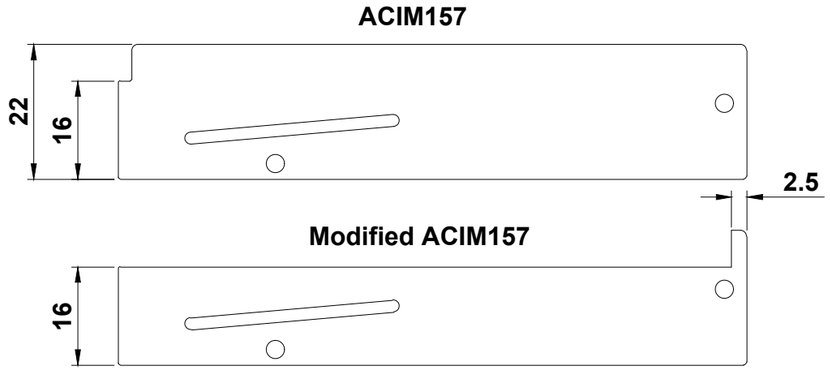

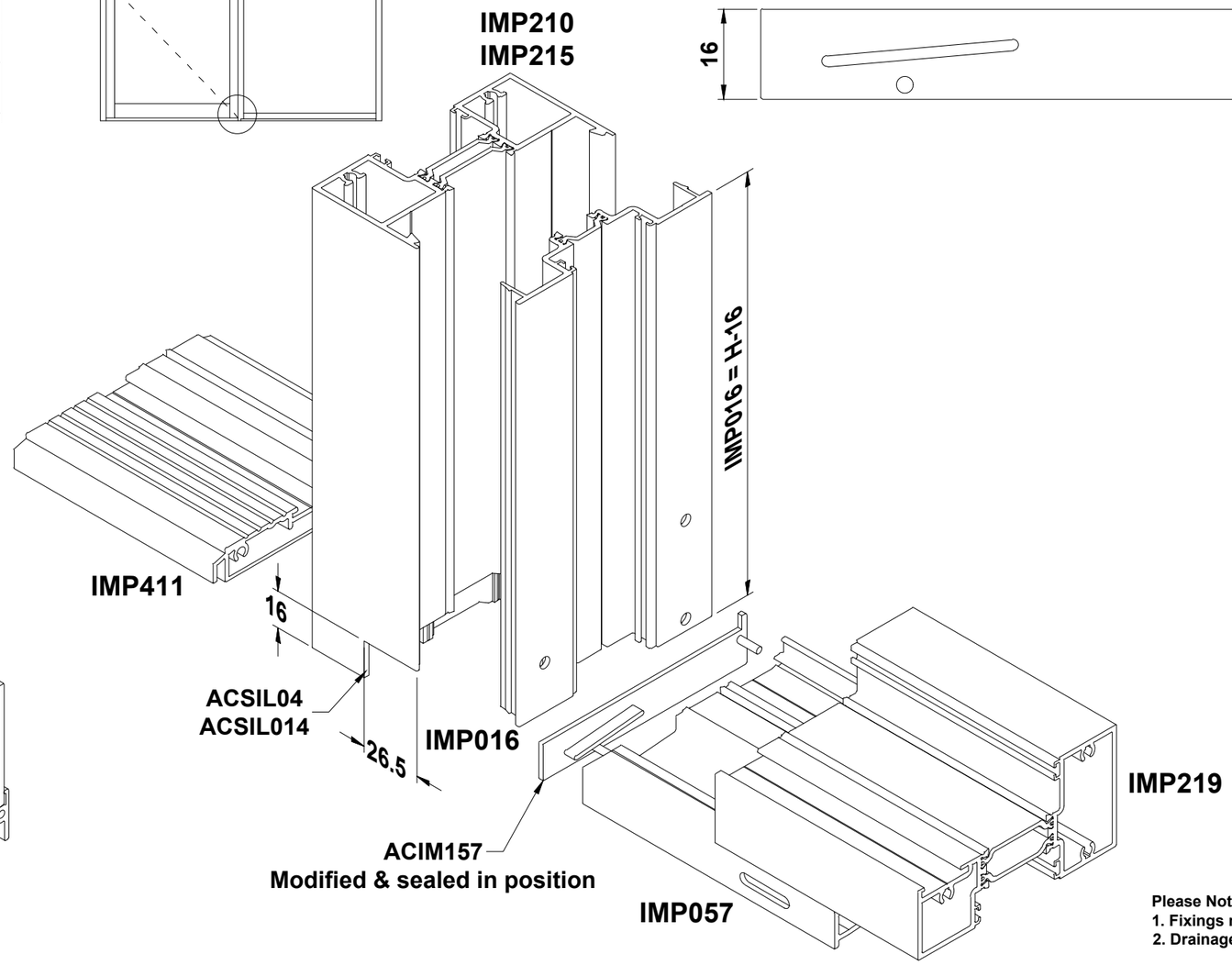

Please Note:
1. Fixings not shown for clarity
2. Drainage detail as manual

Do Not Scale From This Drawing

IMP032 Preparation

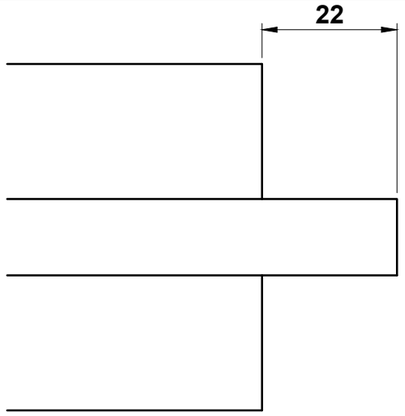

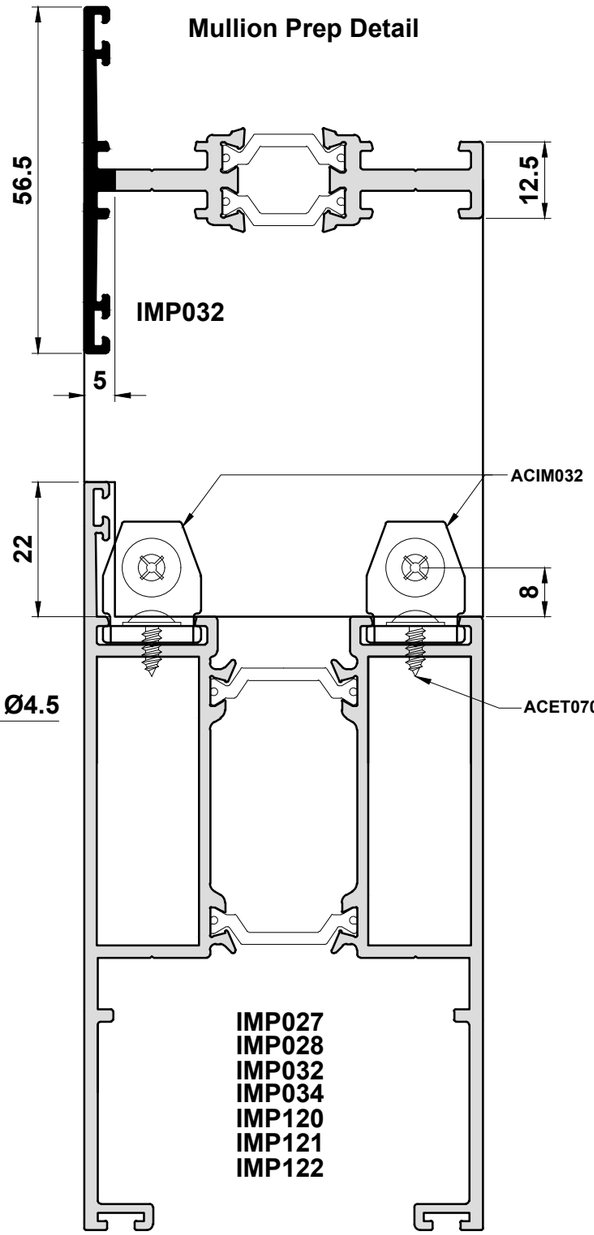

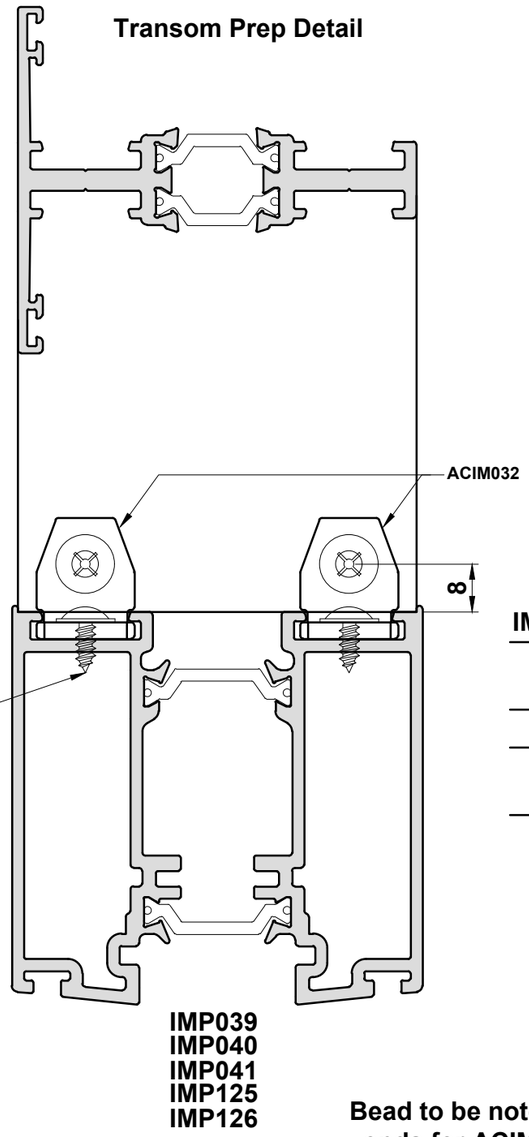

Brackets = ACIM032

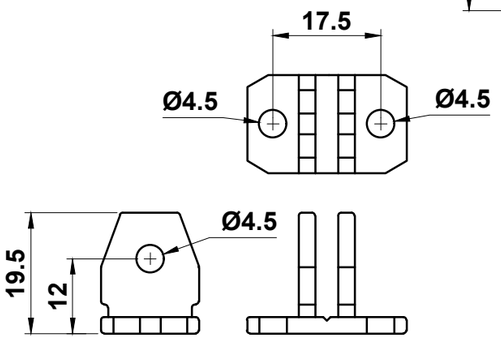

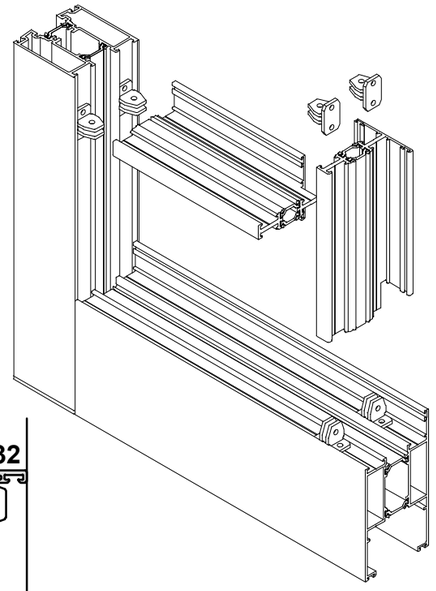

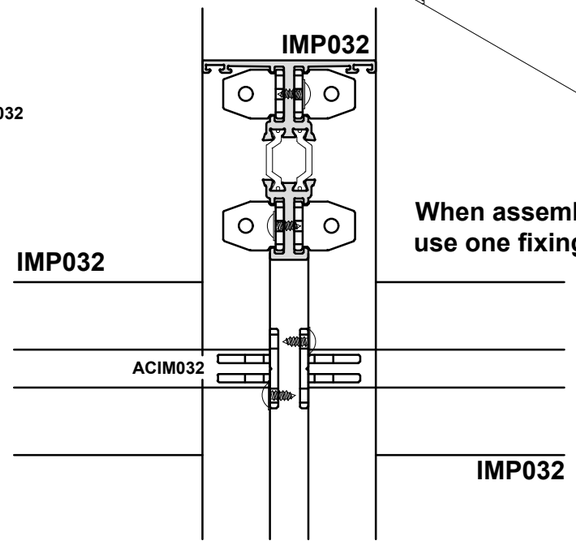

When assembling a cruciform, use one fixing on each side.

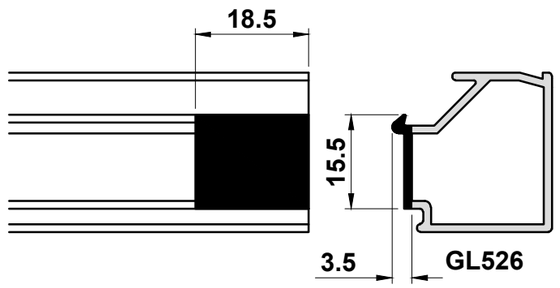

Bead to be notched at both ends for ACIM032 bracket

Do Not Scale From This Drawing

Single Door Lock Preparation

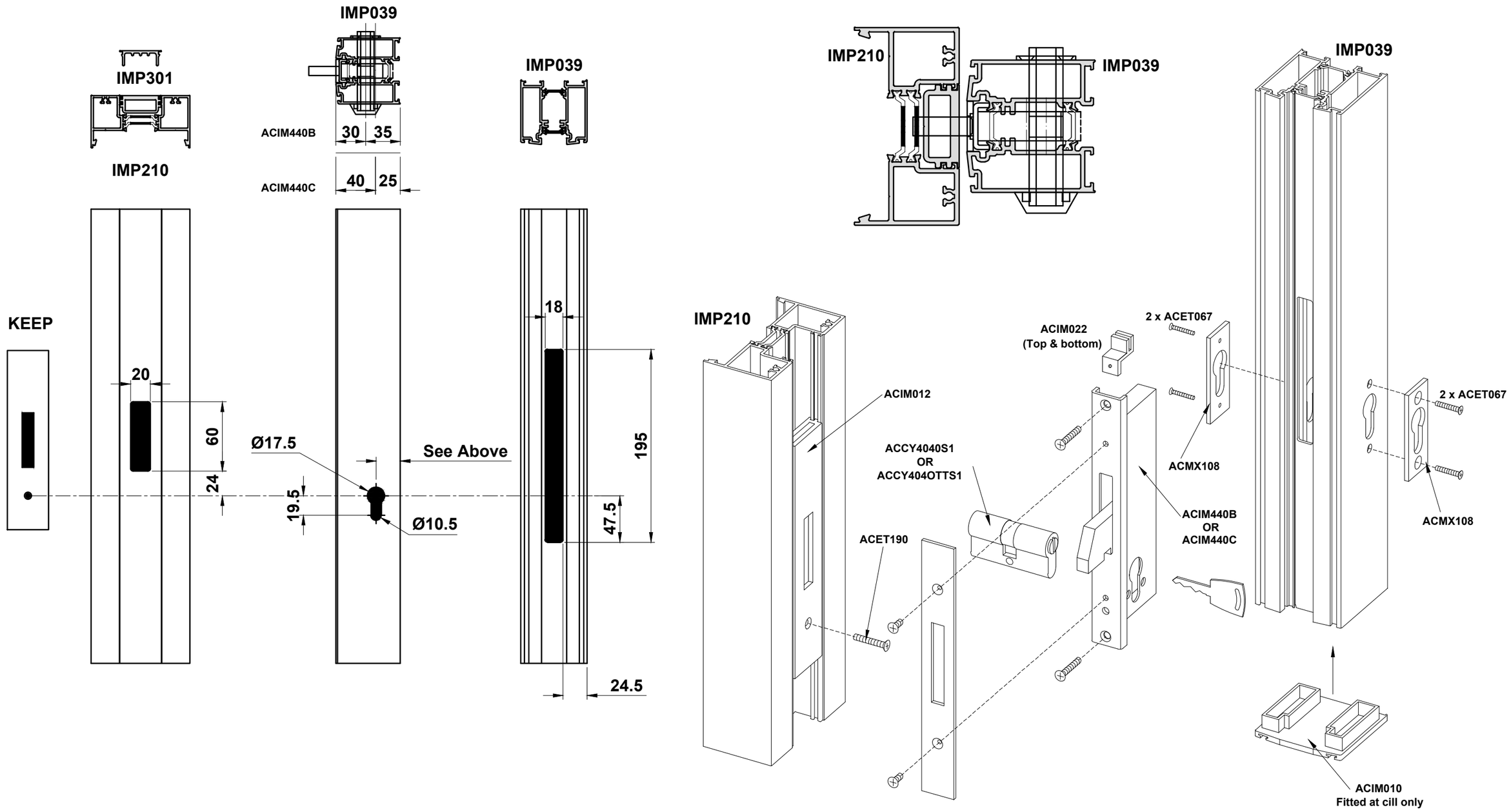

Double Door Lock Preparation

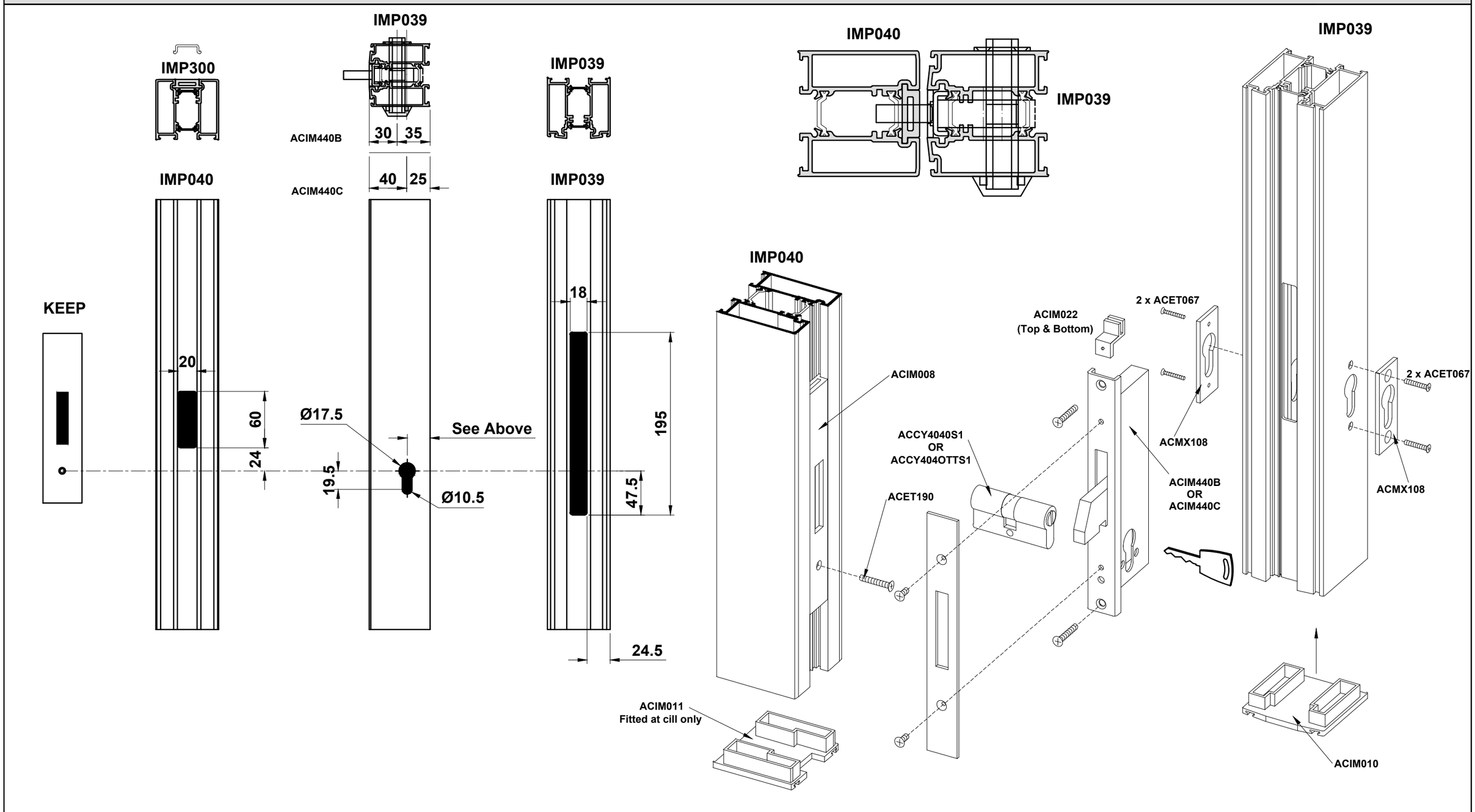

Do Not Scale From This Drawing

Finger Bolt Assembly

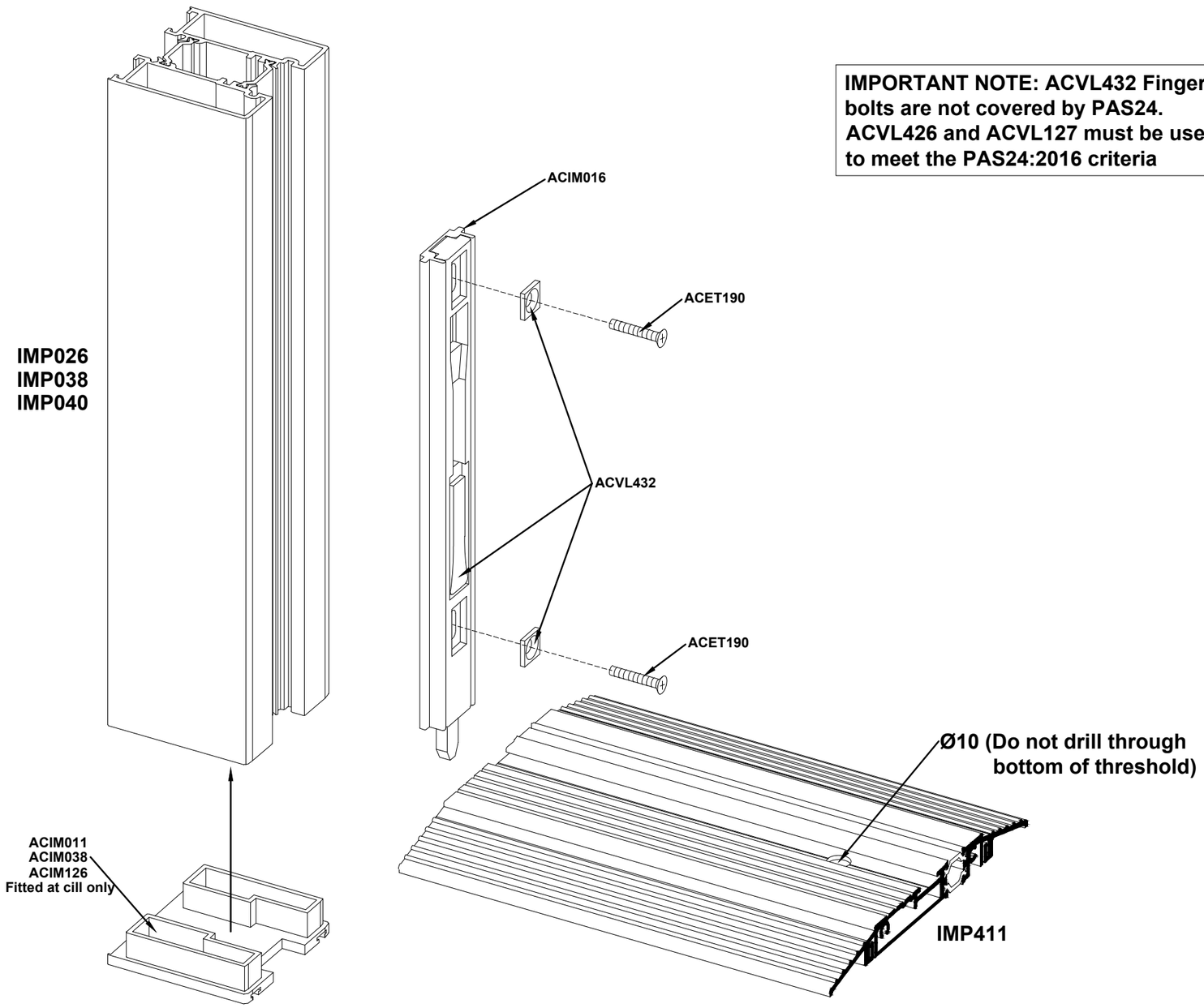

IMPORTANT NOTE: ACVL432 Finger bolts are not covered by PAS24. ACVL426 and ACVL127 must be used to meet the PAS24:2016 criteria

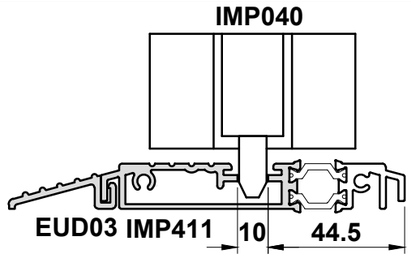

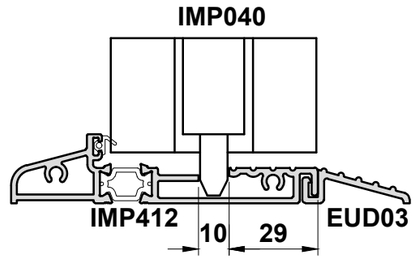

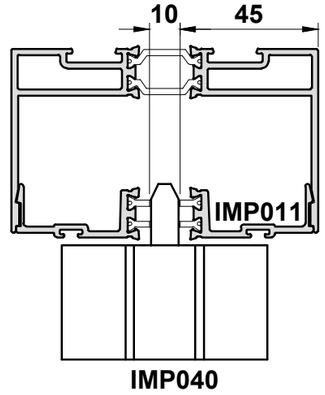

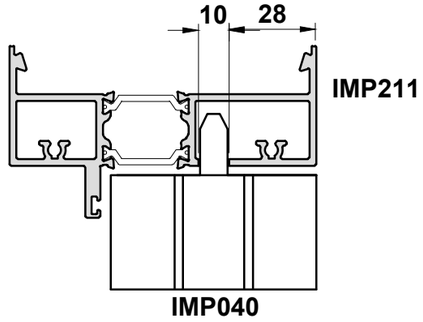

Do Not Scale From This Drawing

ACVL426, ACVL127, ACIM033 Assembly

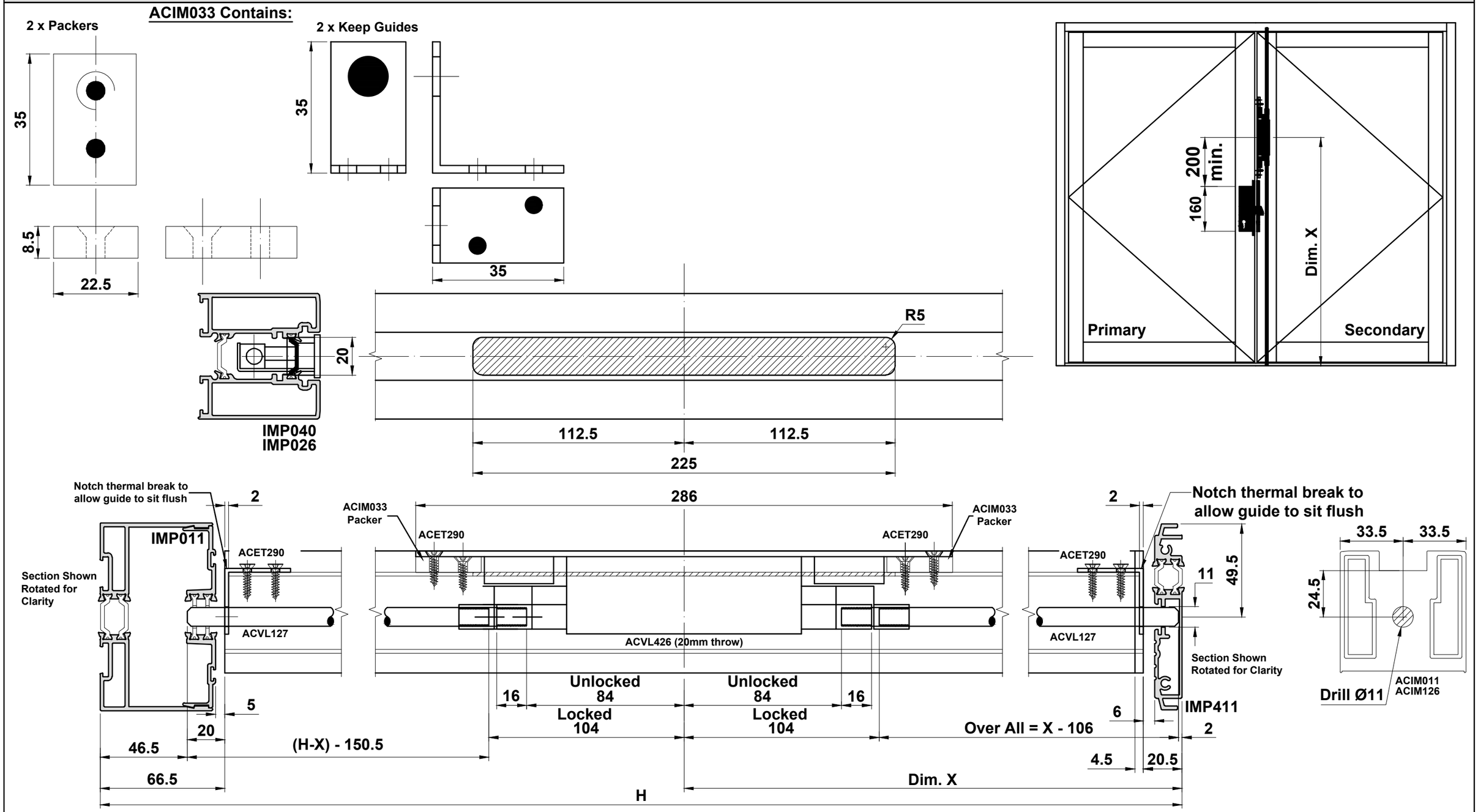

Do Not Scale From This Drawing

Door Closer Assembly

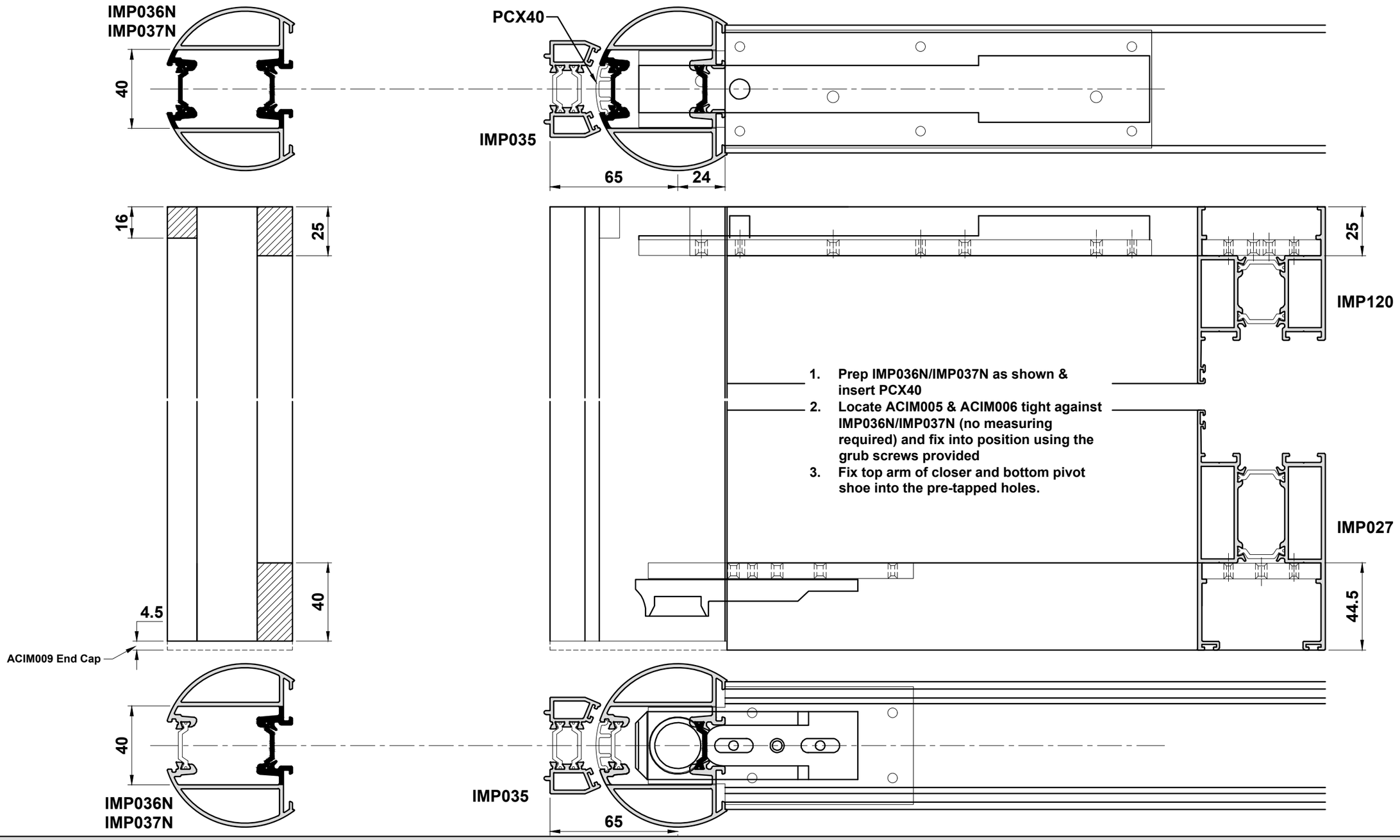

1. Prep IMP036N/IMP037N as shown & insert PCX40
2. Locate ACIM005 & ACIM006 tight against IMP036N/IMP037N (no measuring required) and fix into position using the grub screws provided
3. Fix top arm of closer and bottom pivot shoe into the pre-tapped holes.

Do Not Scale From This Drawing

IMP110 Assembly for Single & Double Doors

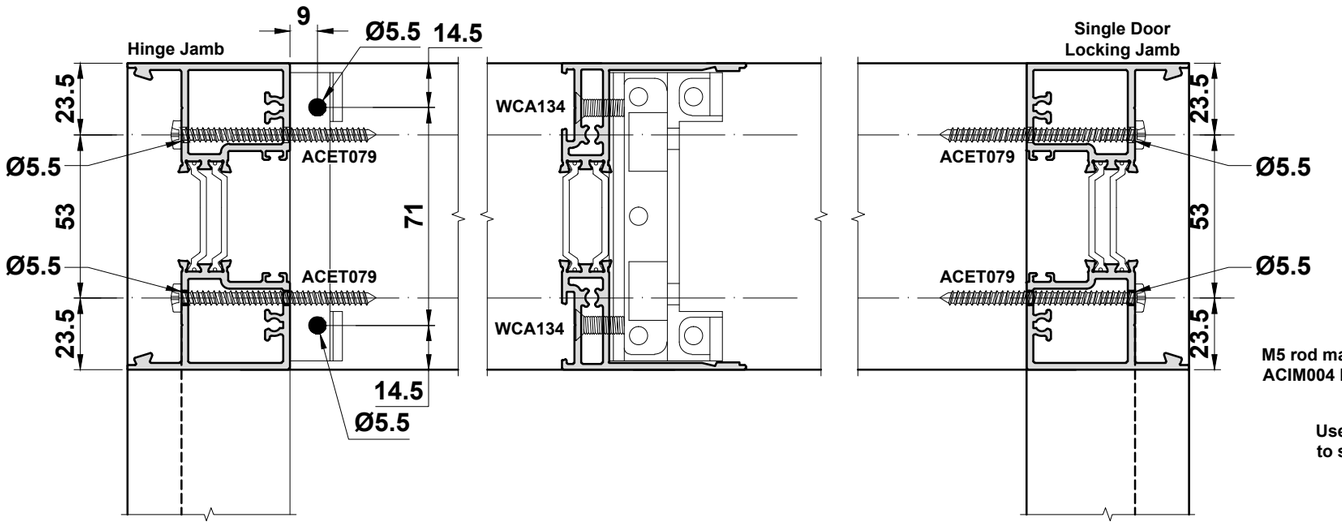

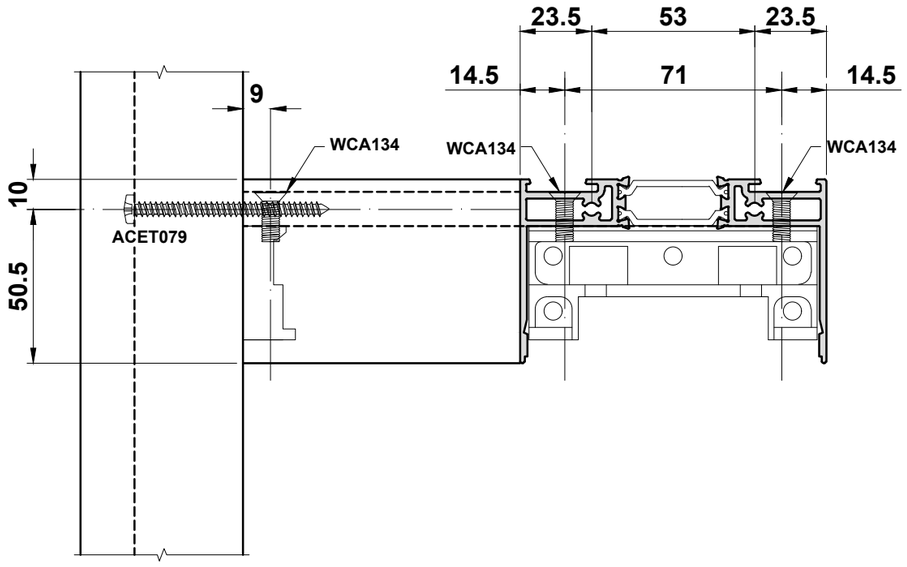

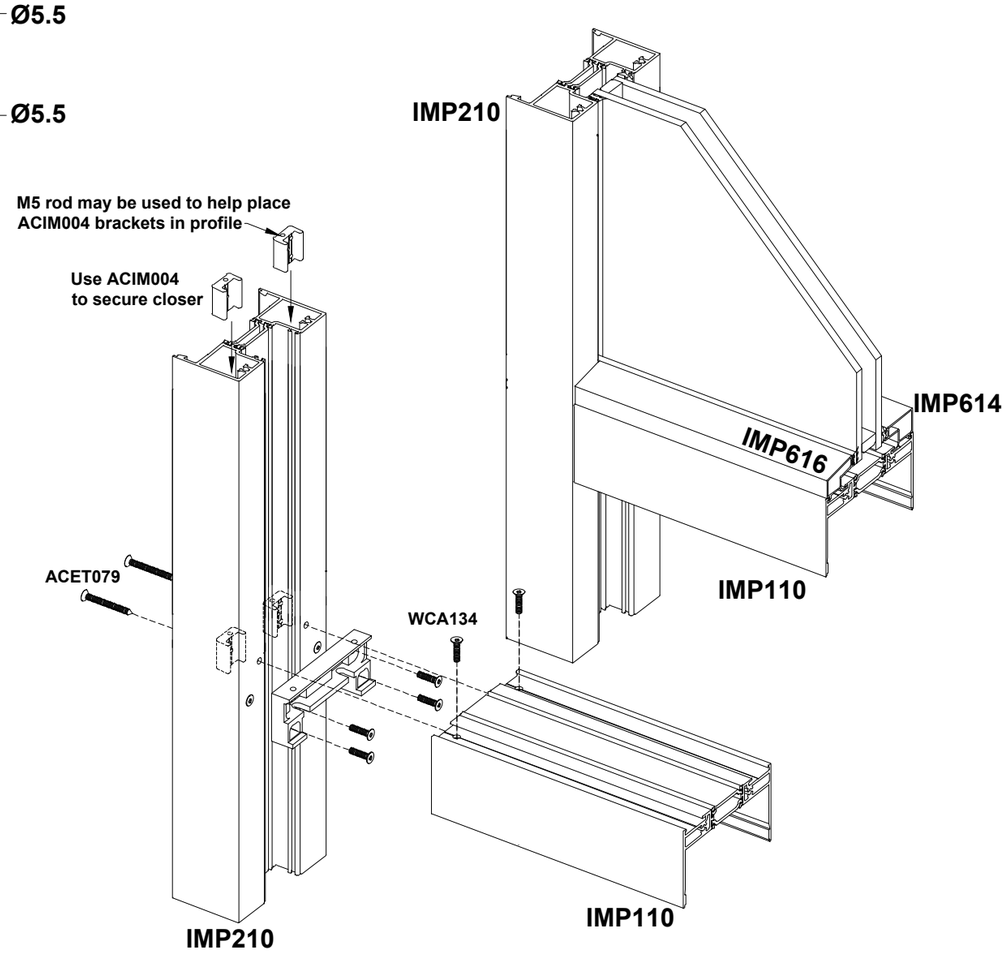

Door Closer Assembly

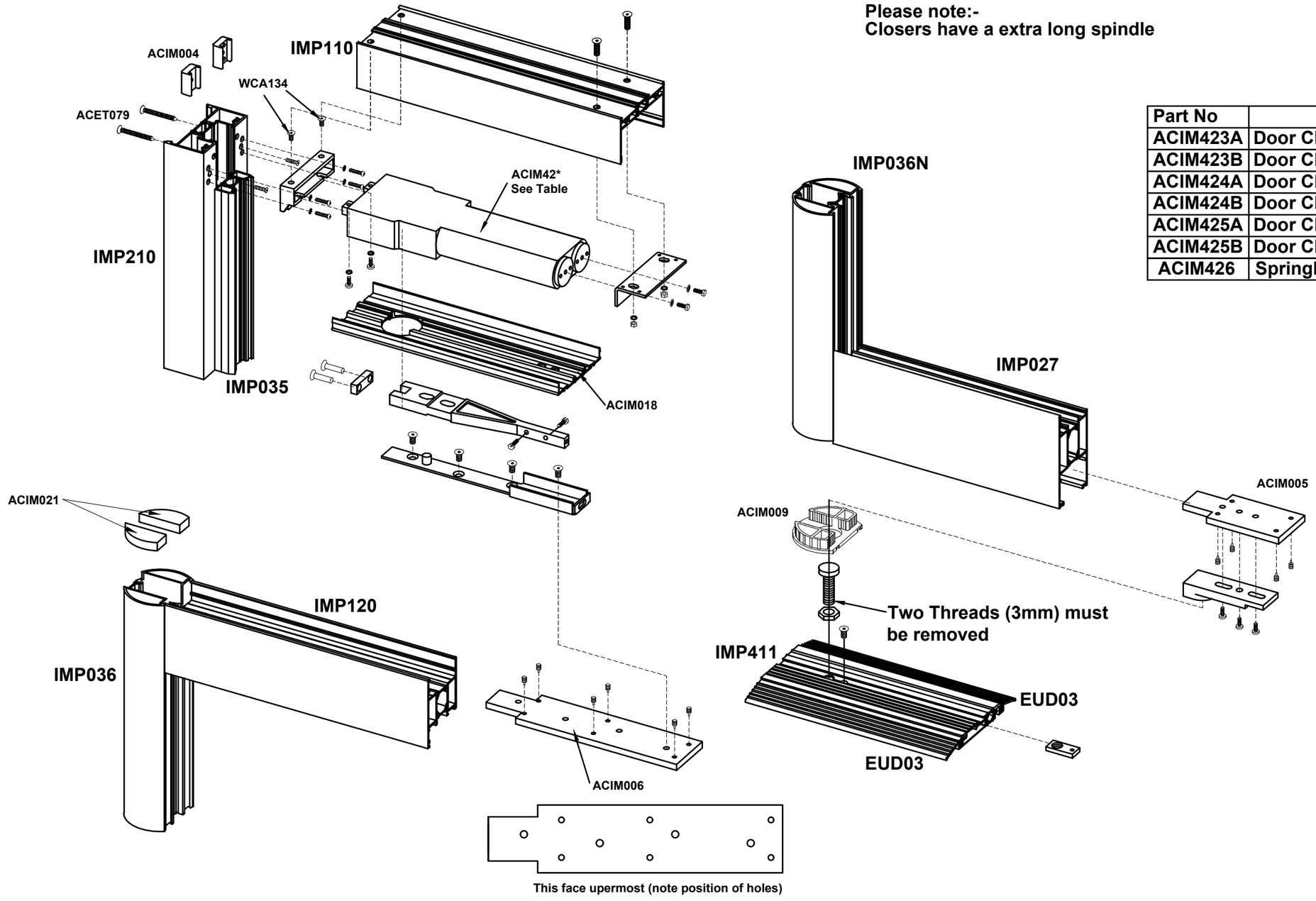

Please note:-
Closers have a extra long spindle

Part No	Description
ACIM423A	Door Closer Not Hold Open 750/950
ACIM423B	Door Closer Hold Open 750/950
ACIM424A	Door Closer Not Hold Open 950/1150
ACIM424B	Door Closer Hold Open 950/1150
ACIM425A	Door Closer Not Hold Open <750
ACIM425B	Door Closer Hold Open <750
ACIM426	Springless Door Closer <750/1150

Do Not Scale From This Drawing

Rebated Door Closer Assembly

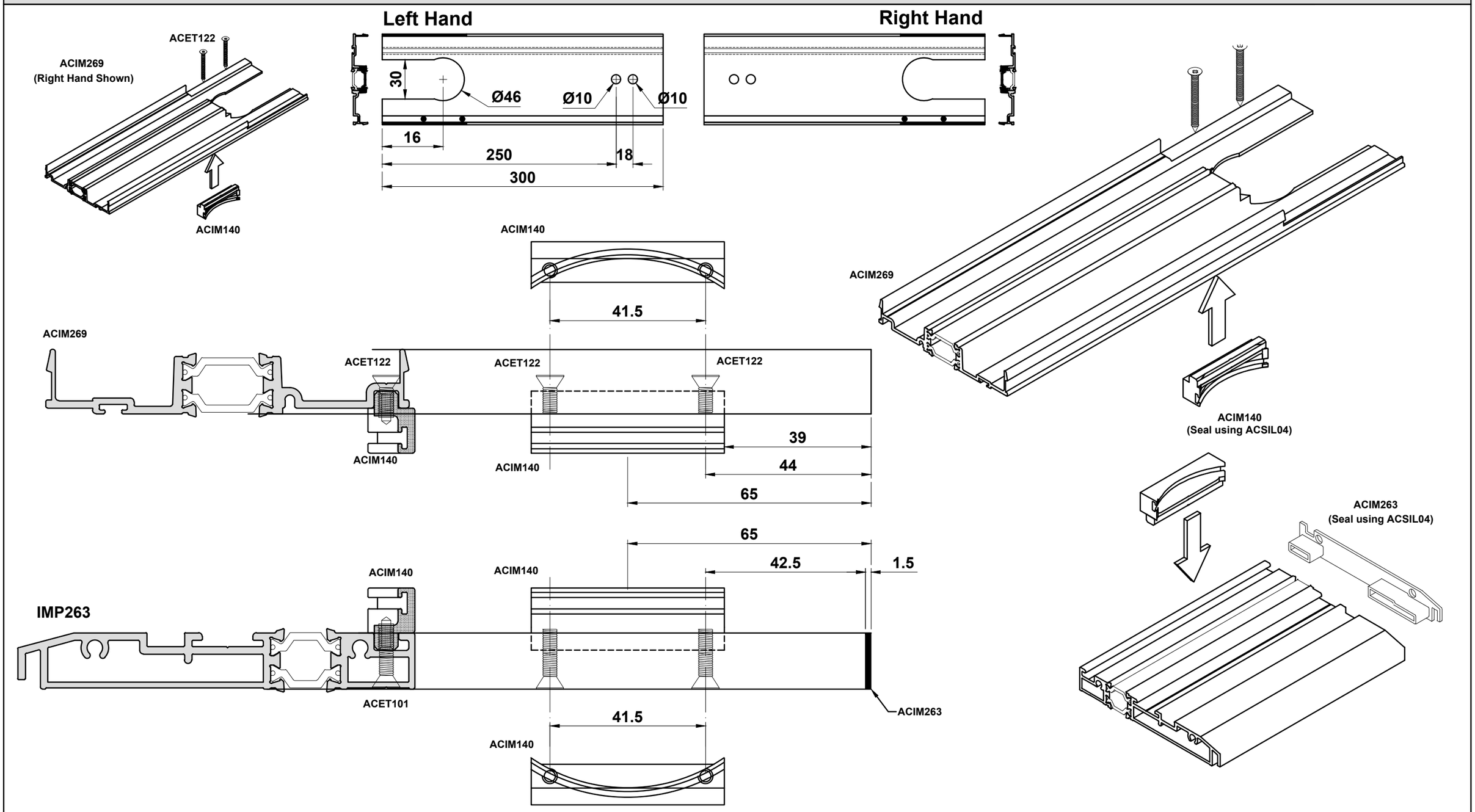

Do Not Scale From This Drawing

AFT Rebated Door Open In Threshold Preparation

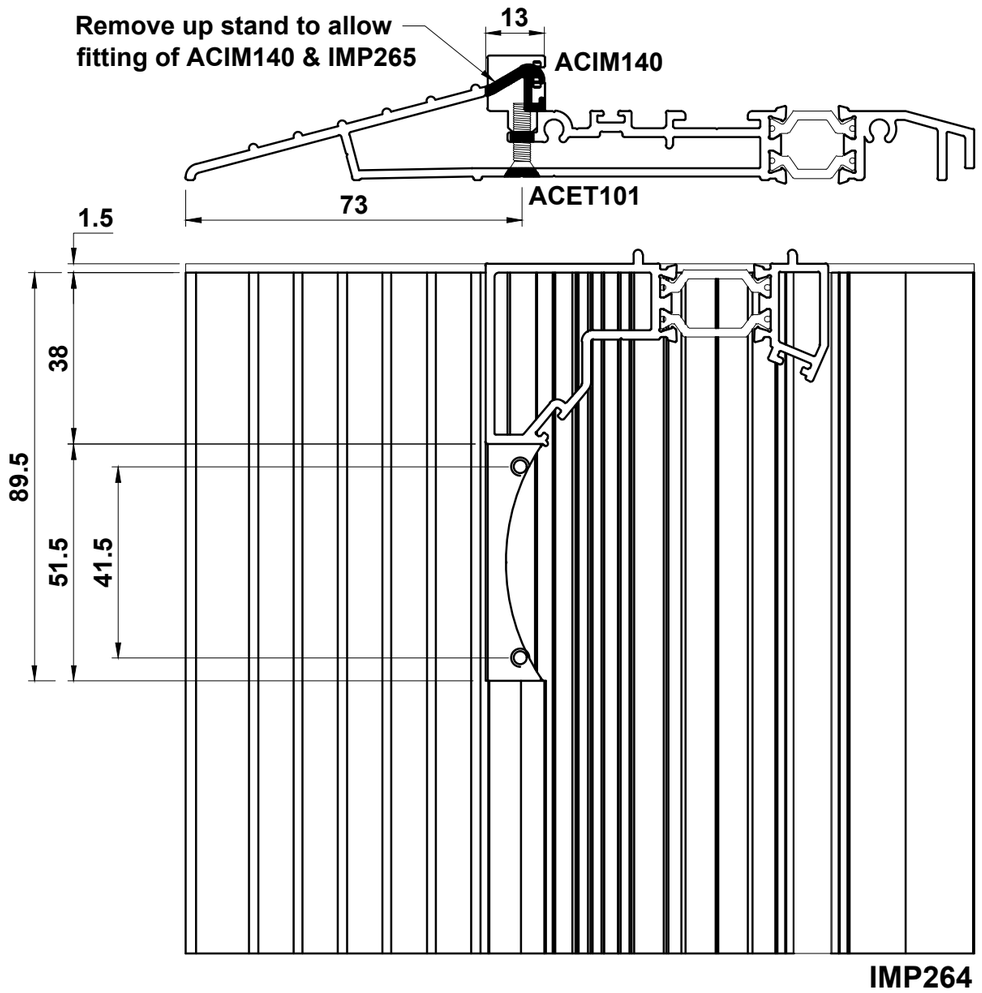

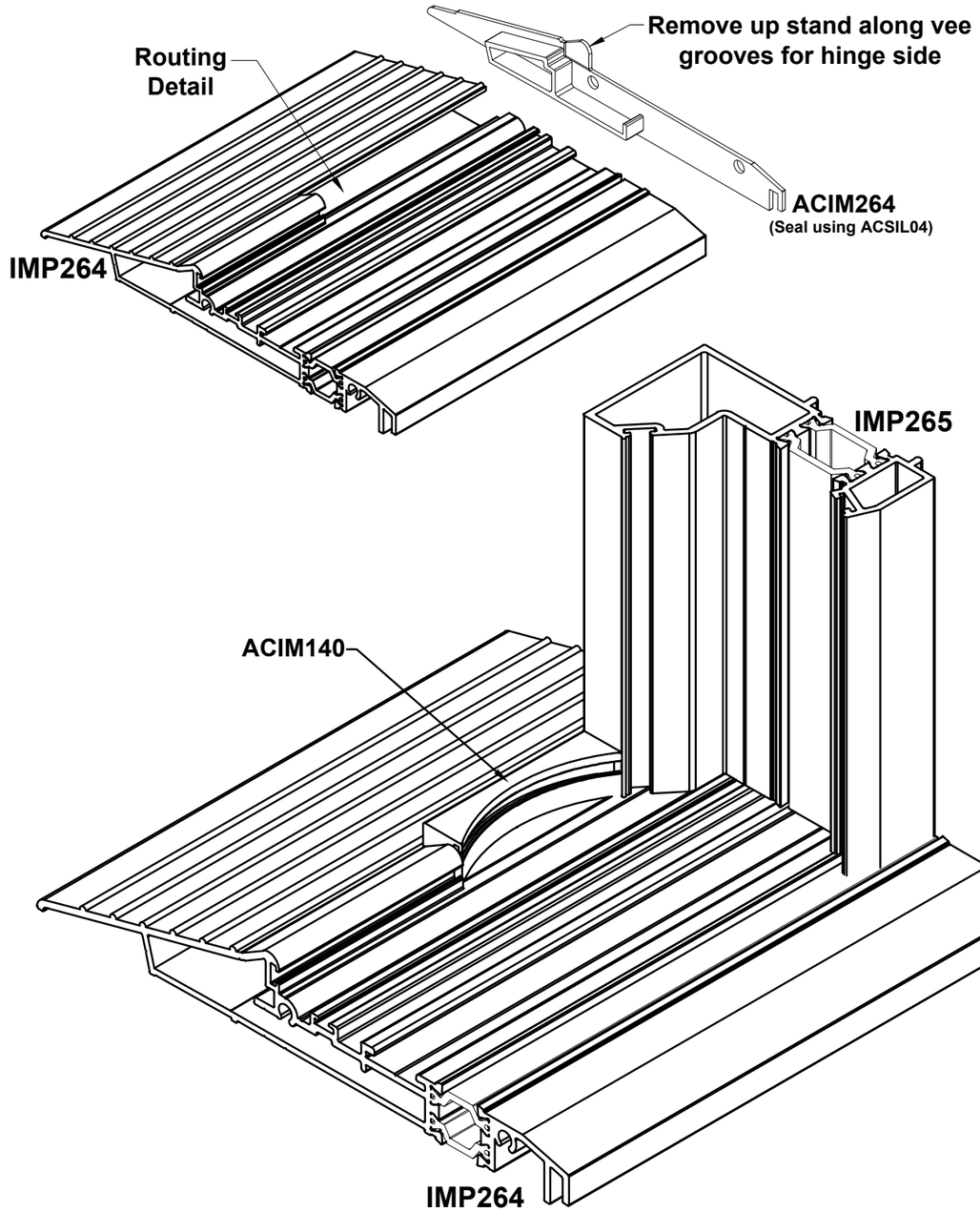

Do Not Scale From This Drawing

AFT Rebated Door Open Out Threshold Preparation

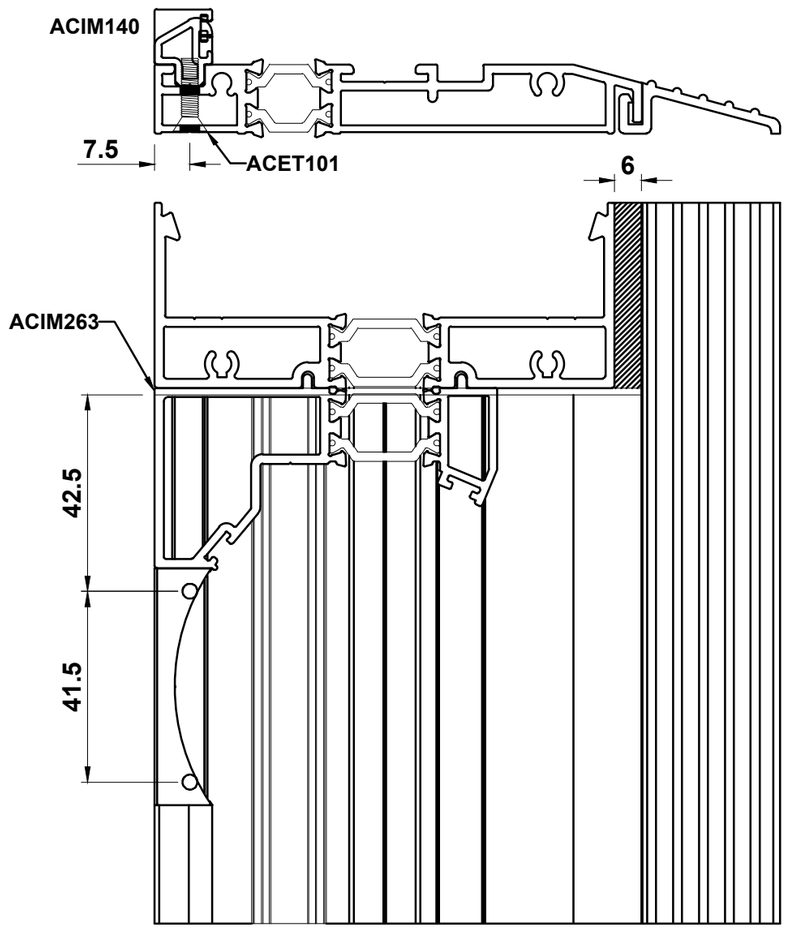

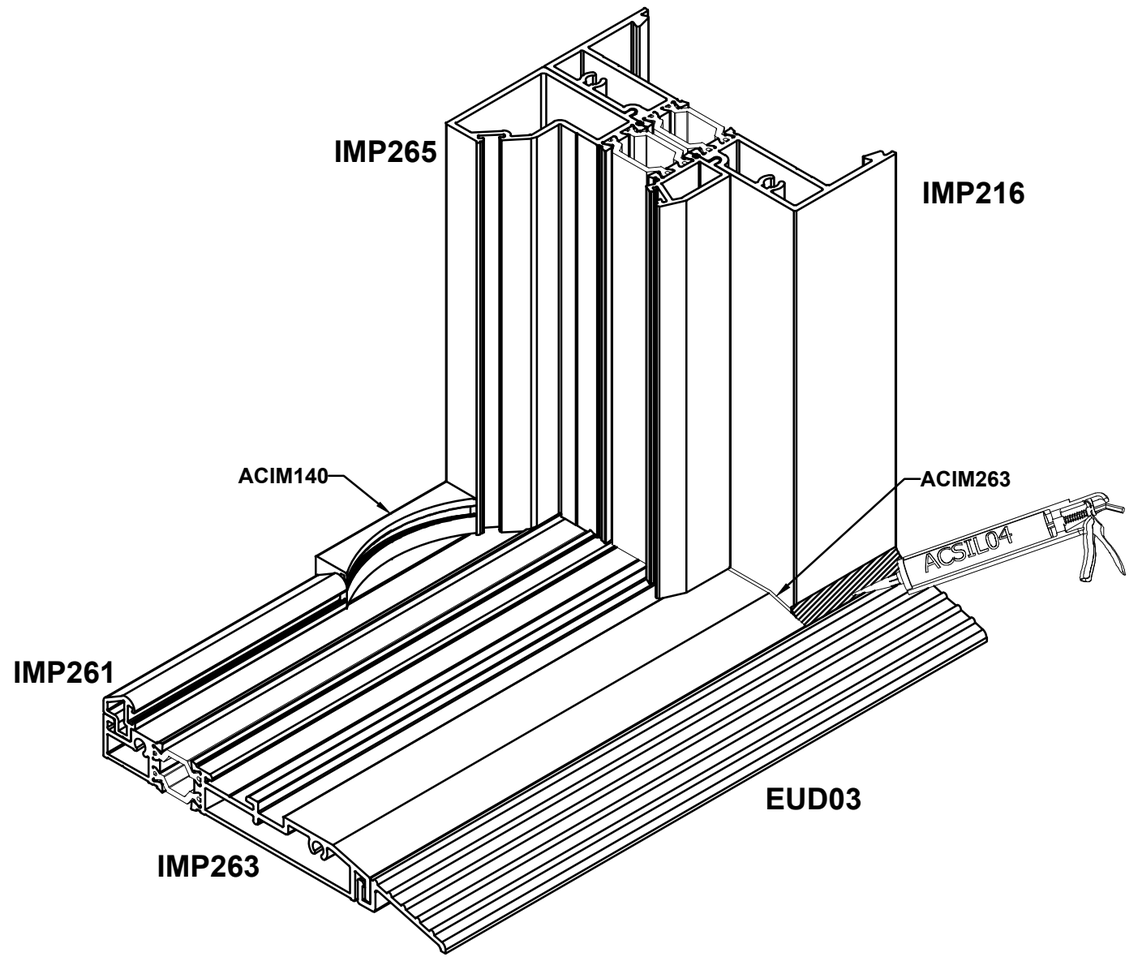

Do Not Scale From This Drawing

Rebated Door Closer Assembly Process

Assembly Instructions:

1. Assemble IMP110, IMP216 & IMP263 as standard
2. Fix IMP260 to the locking jamb tight to IMP263
3. Fix IMP265 to the hinge jamb
4. Fix ACIM140 to IMP263 tight against IMP265
5. Fix IMP261 to IMP263 in between IMP260 & ACIM140.

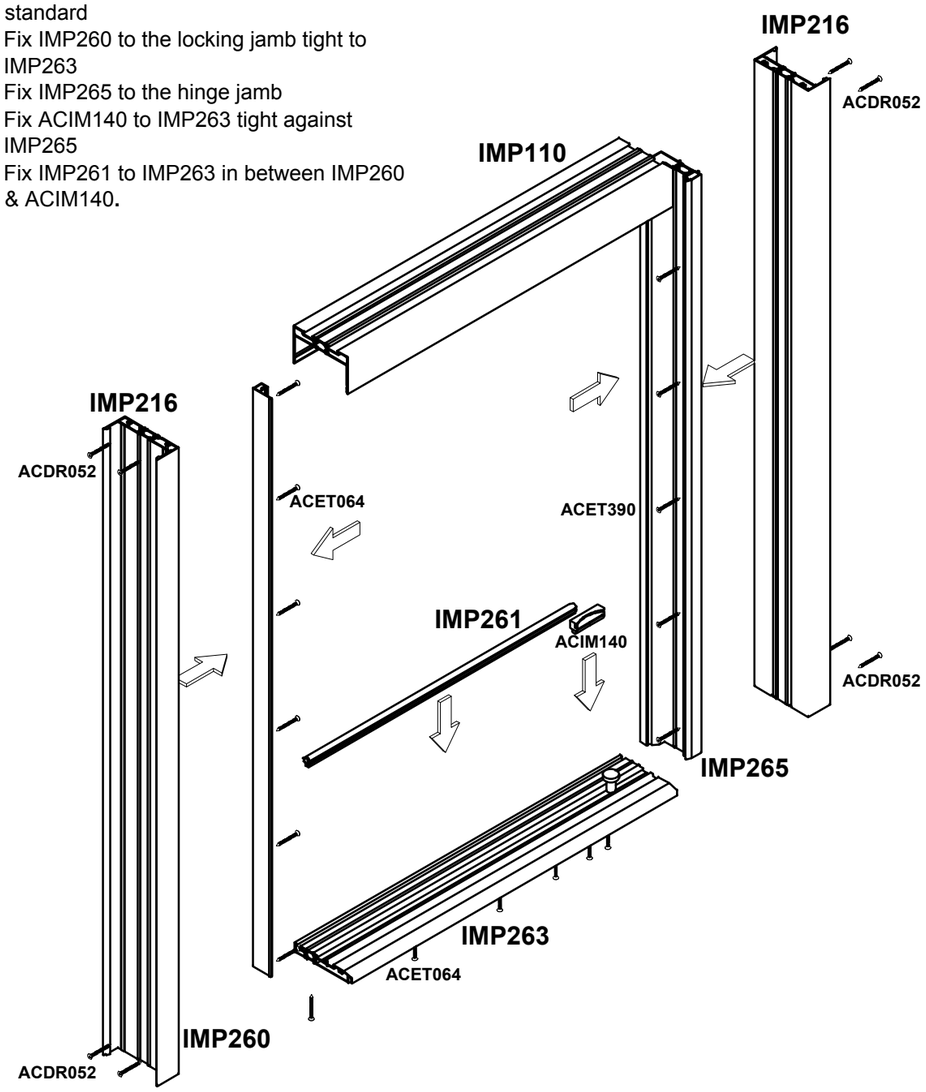

Assembly Instructions continued:

6. Hang door sash
7. With ACIM140 secured to ACIM269, clip the ACIM269 into IMP110 and slide tight against IMP265 over the closer pivot
8. Secure IMP262 to IMP269 flush to the locking side and clip into IMP110.

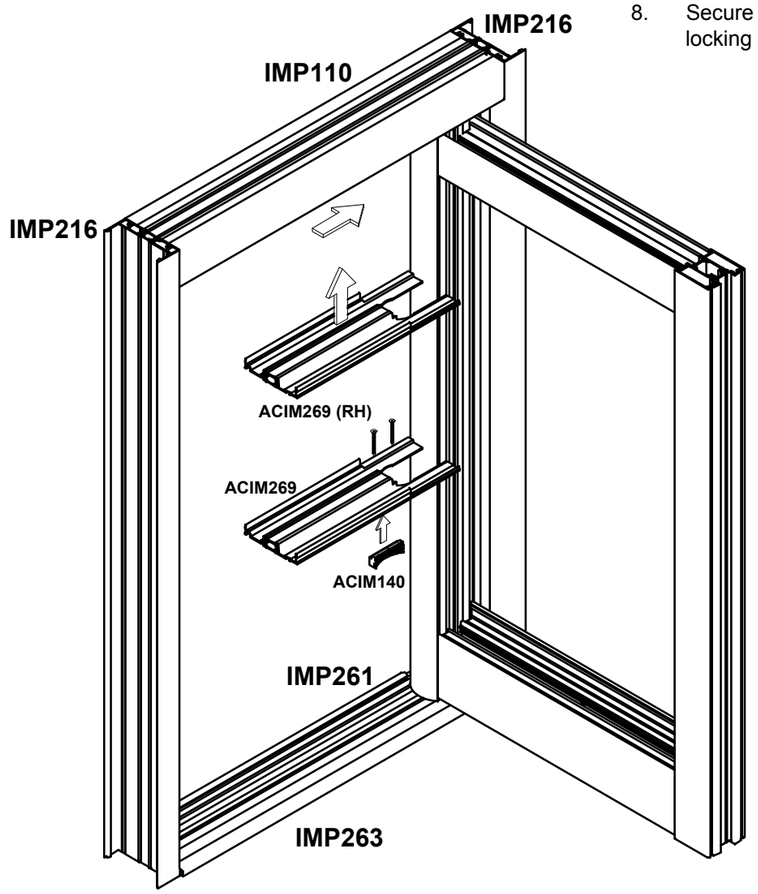

Do Not Scale From This Drawing

ACIM429, ACIM430 Fixing Details

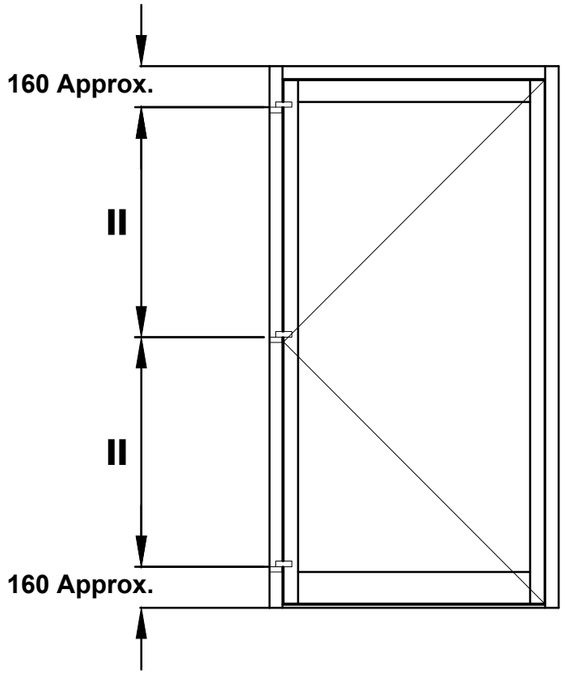

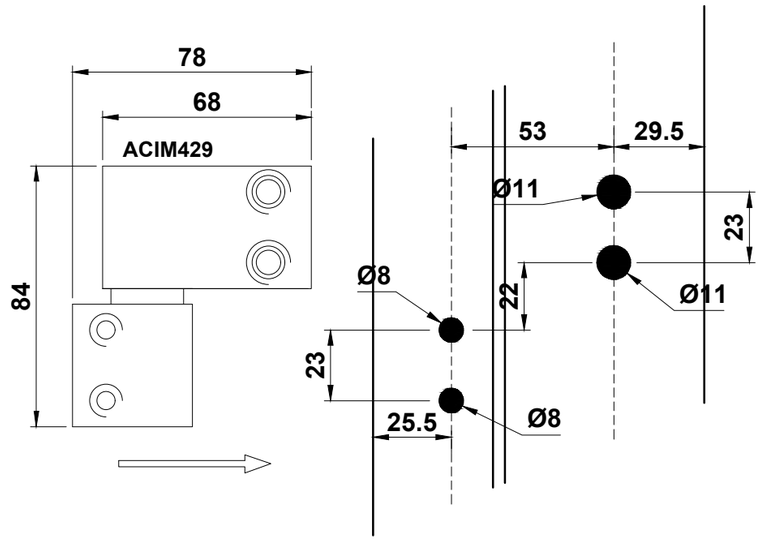

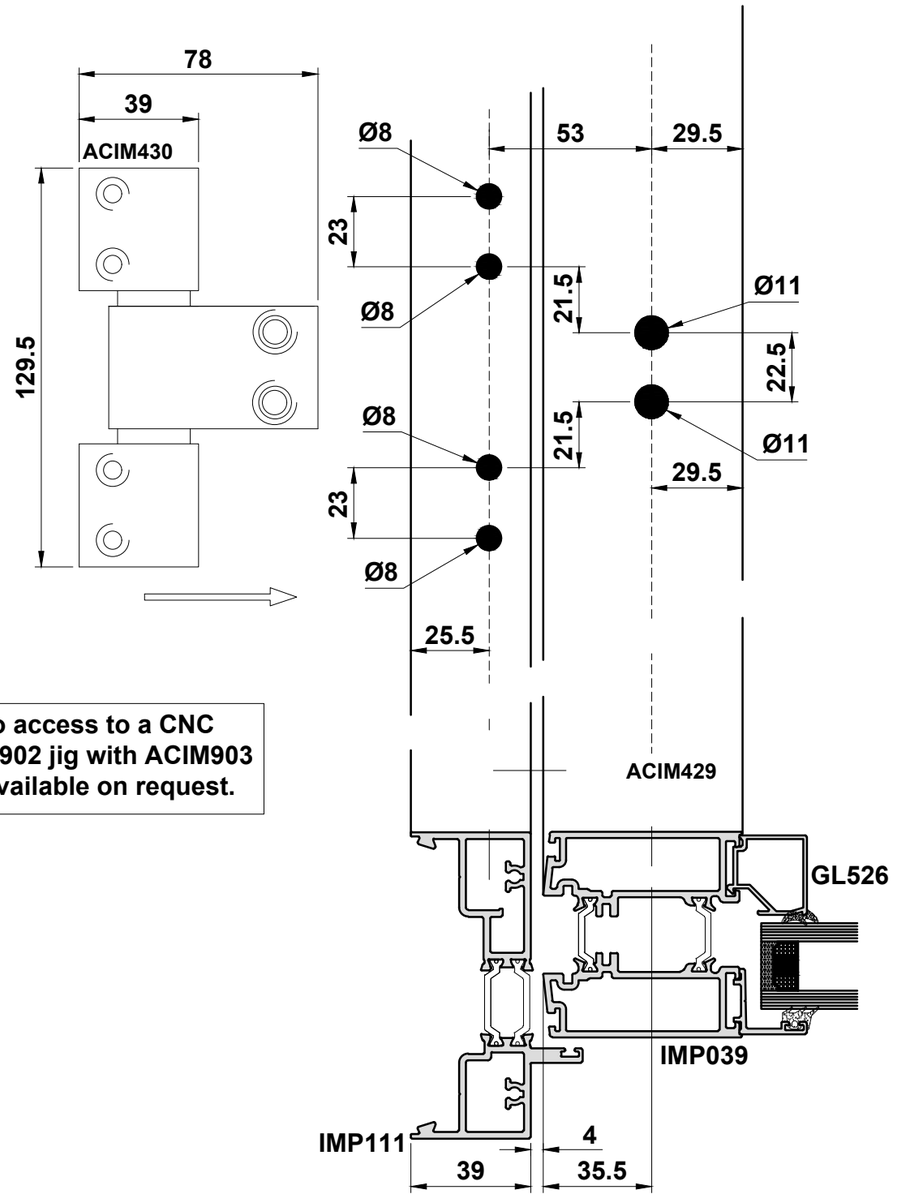

Weight Limitations:
2 Hinges = 80kg
3 Hinges = 100kg

If there is no access to a CNC machine, ACIM902 jig with ACIM903 adaptor are available on request.

Please note that door closers increase the loading of the door and their rate of wear. When calculating the weight of the door, 20% should be added to allow for the impact of a door closer without back-check and 75% should be added when using a closer with back-check.
Example:
Door closer without back-check: 65kg + 20% = 78kg (2 hinges)
Door closer with back-check: 55kg + 75% = 96kg (3 hinges)

Do Not Scale From This Drawing

Glazing Details

Glazing Table for Doors			
Glass Thickness	External Gasket	Internal Gasket	Glazing Bead
23	ACVG31 (3mm)	ACVG34 (5mm)	GL030 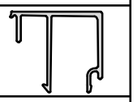
24	ACVG31 (3mm)	ACVG33 (4mm)	
25	ACVG31 (3mm)	ACVG32 (3mm)	
26	ACVG131 (4mm)	ACVG34 (5mm)	GL526
27	ACVG31 (3mm)	ACVG34 (5mm)	
28	ACVG31 (3mm)	ACVG33 (4mm)	
29	ACVG31 (3mm)	ACVG32 (3mm)	
30	ACVG31 (3mm)	ACVG34 (5mm)	GL023 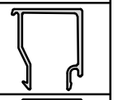
31	ACVG31 (3mm)	ACVG33 (4mm)	
32	ACVG31 (3mm)	ACVG32 (3mm)	
33	ACVG31 (3mm)	ACVG34 (5mm)	GL020 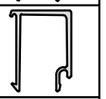
34	ACVG31 (3mm)	ACVG33 (4mm)	
35	ACVG31 (3mm)	ACVG32 (3mm)	
36	ACVG131 (4mm)	ACVG34 (5mm)	GL1216
37	ACVG31 (3mm)	ACVG34 (5mm)	
38	ACVG31 (3mm)	ACVG33 (4mm)	
39	ACVG31 (3mm)	ACVG34 (5mm)	GL014
40	ACVG31 (3mm)	ACVG33 (4mm)	
41	ACVG31 (3mm)	ACVG32 (3mm)	
42	ACVG31 (3mm)	ACVG33 (4mm)	GL1212
43	ACVG31 (3mm)	ACVG32 (3mm)	
44	ACVG31 (3mm)	ACVG34 (5mm)	GL008
45	ACVG31 (3mm)	ACVG34 (5mm)	
46	ACVG31 (3mm)	ACVG33 (4mm)	
47	ACVG31 (3mm)	ACVG32 (3mm)	
48	ACVG131 (4mm)	ACVG34 (5mm)	GL004
49	ACVG31 (3mm)	ACVG34 (5mm)	
50	ACVG31 (3mm)	ACVG33 (4mm)	
51	ACVG31 (3mm)	ACVG32 (3mm)	

Glazing Table for IMP110			
Glass Thickness	External Gasket	Internal Gasket	Glazing Bead
28	ACVG131 (4mm)	ACVG34 (5mm)	IMP615 & IMP613 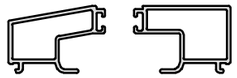

Glazing Table for IMP030 & IMP217			
Glass Thickness	External Gasket	Internal Gasket	Glazing Bead
28	ACVG131 (4mm)	ACVG34 (5mm)	IMP613 or IMP615 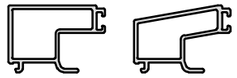

Glazing Table for IMP219			
Glass Thickness	External Gasket	Internal Gasket	Glazing Bead
28	ACVG131 (4mm)	ACVG34 (5mm)	IMP614 or IMP616 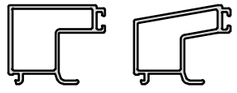

Glazing Details

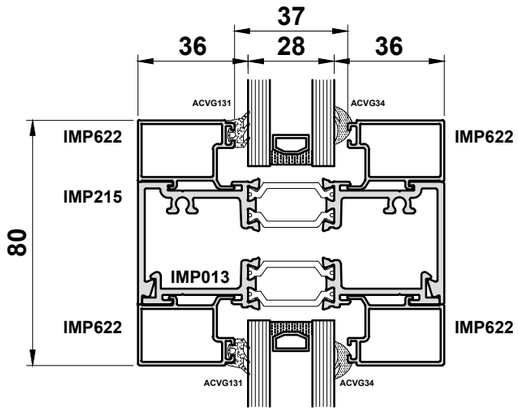

Glazing Table for IMP215 & IMP013			
Glass Thickness	External Gasket	Internal Gasket	Glazing Bead
28	ACVG131 (4mm)	ACVG34 (5mm)	IMP622 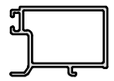

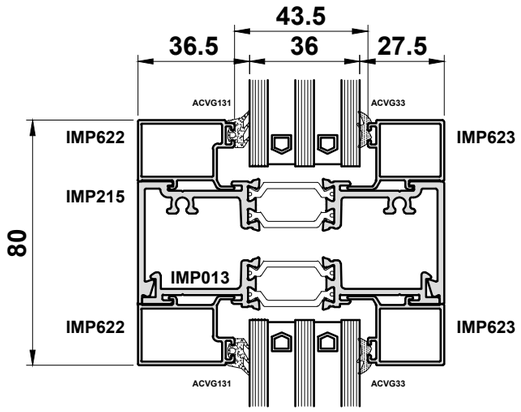

Glazing Table for IMP215 & IMP013				
Glass Thickness	External Gasket	Internal Gasket	Glazing Bead	Glazing Bead
36	ACVG131 (4mm)	ACVG33 (4mm)	IMP622 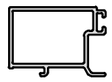	IMP623 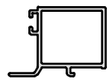

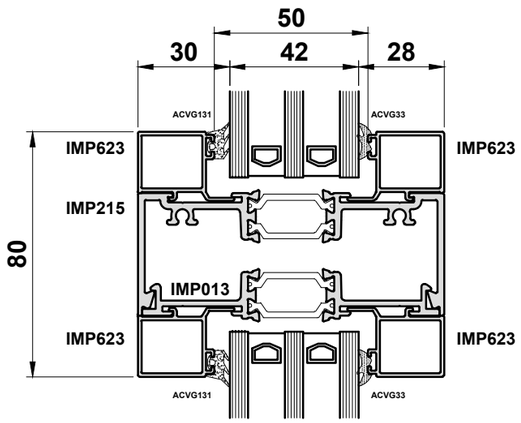

Glazing Table for IMP215 & IMP013			
Glass Thickness	External Gasket	Internal Gasket	Glazing Bead
42	ACVG131 (4mm)	ACVG33 (4mm)	IMP623 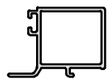

Do Not Scale From This Drawing

Drainage Details

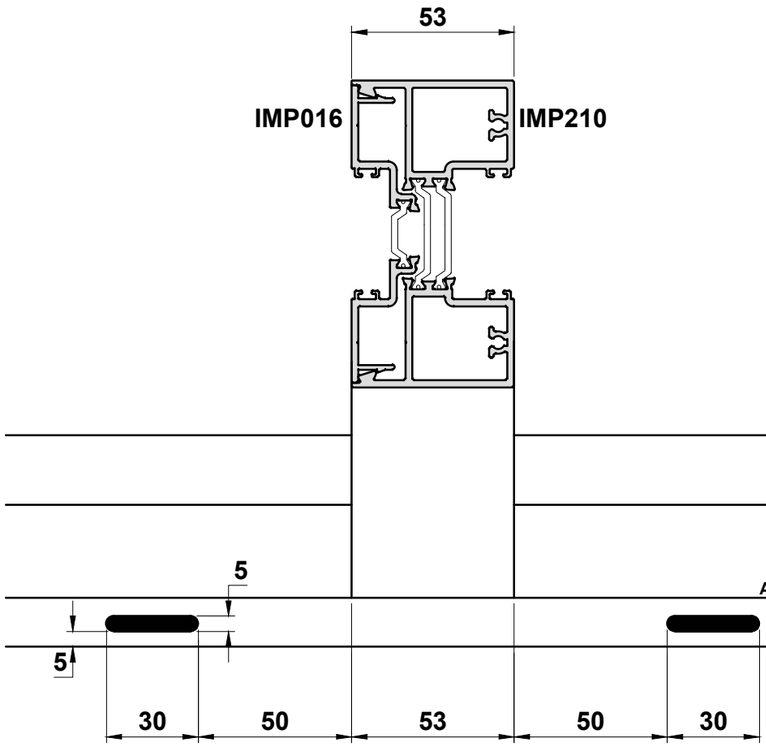

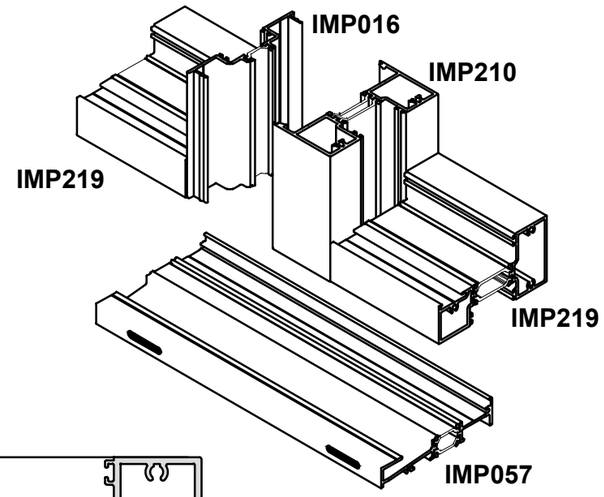

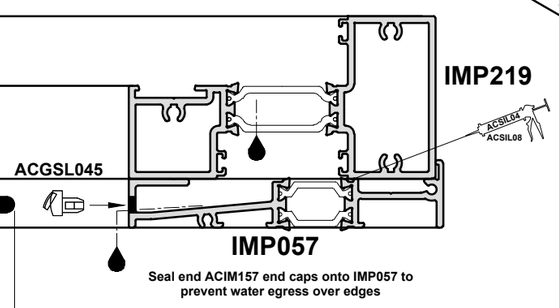

Important Note:
To prevent overwhelming the cill drainage, screens over 2400mm high, or in exposed areas, shall be zone drained (see below) and ACIM130 foam inserts used to reduce the flow of water into the glazing channel.

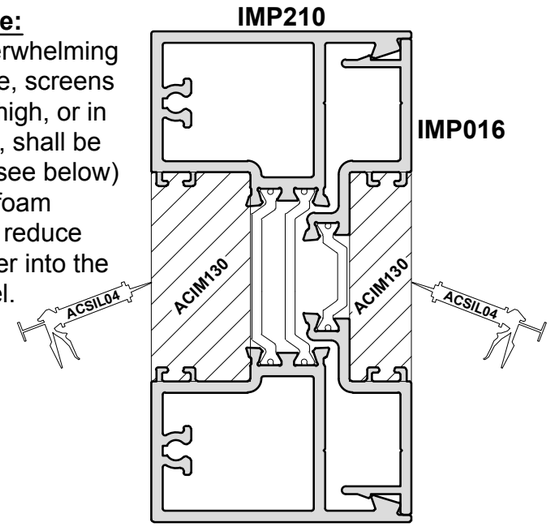

Important Note: All exposed aluminium should be coated using ACSIL014 or painted to match the frame.

Note:
Transoms in screens & rails in doors will drain at the join to vertical members

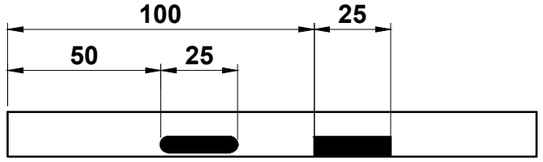

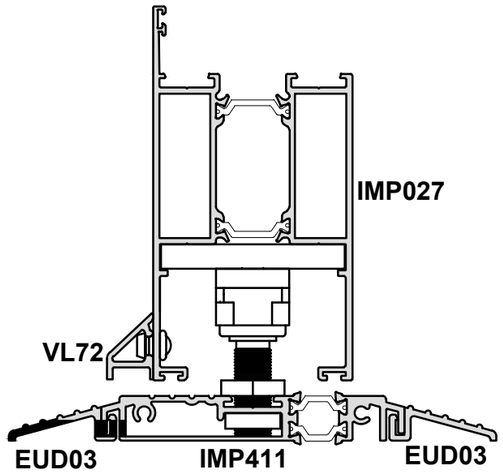

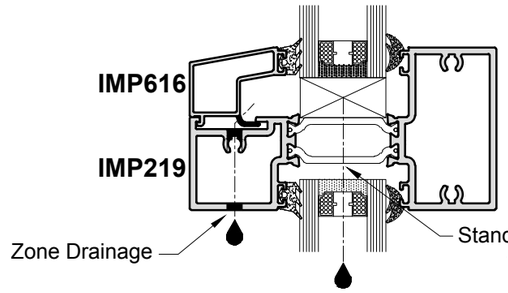

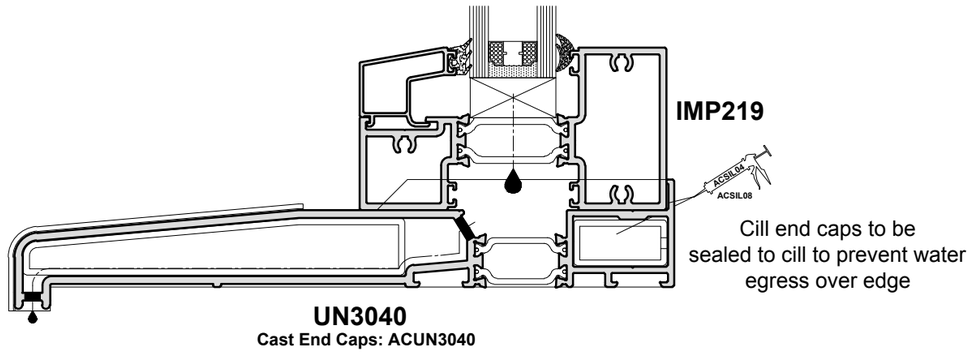

ACIM452 & ACIM453 Preparation

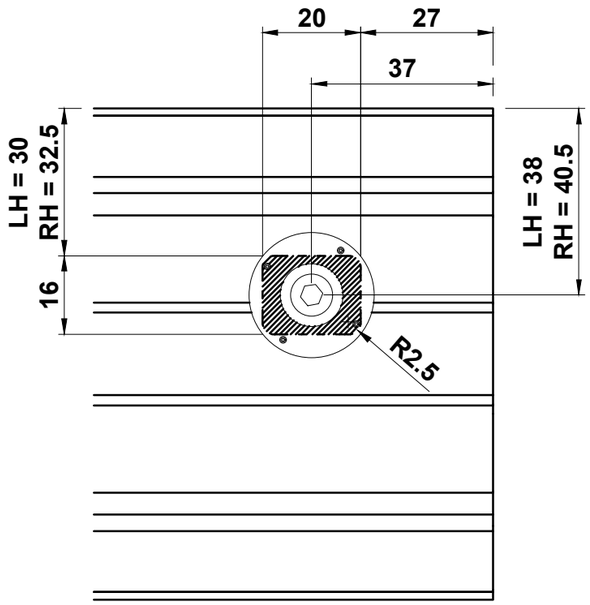

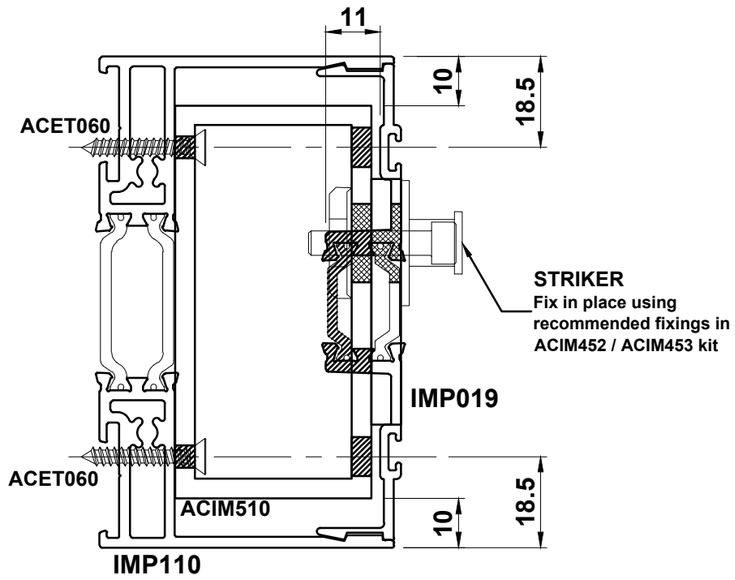

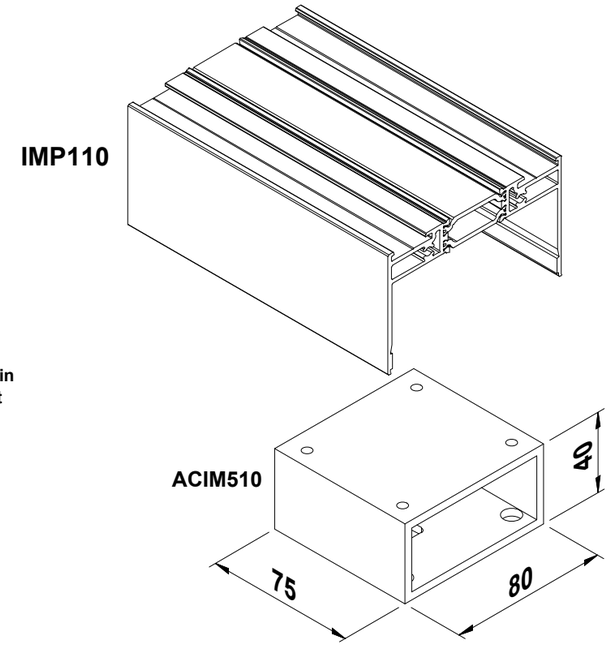

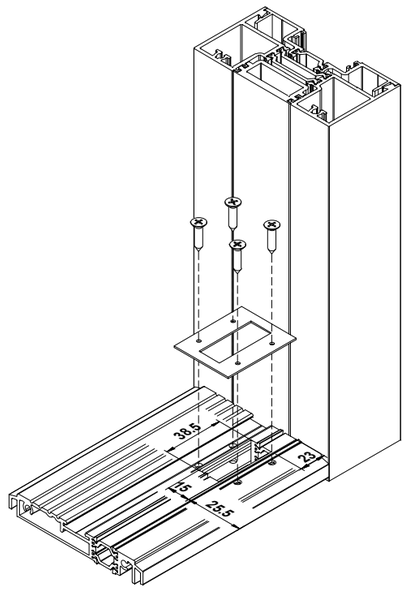

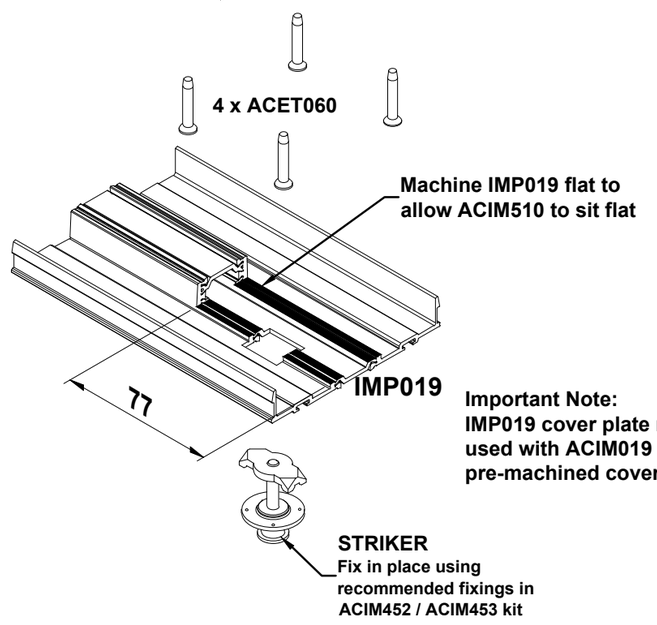

Important Note:
IMP019 cover plate must be used with ACIM019 pre-machined cover plate

Do Not Scale From This Drawing

ACIM452 & ACIM453 Preparation

IMP041

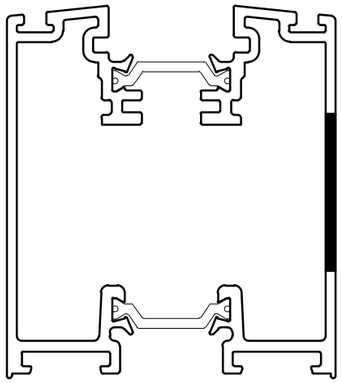

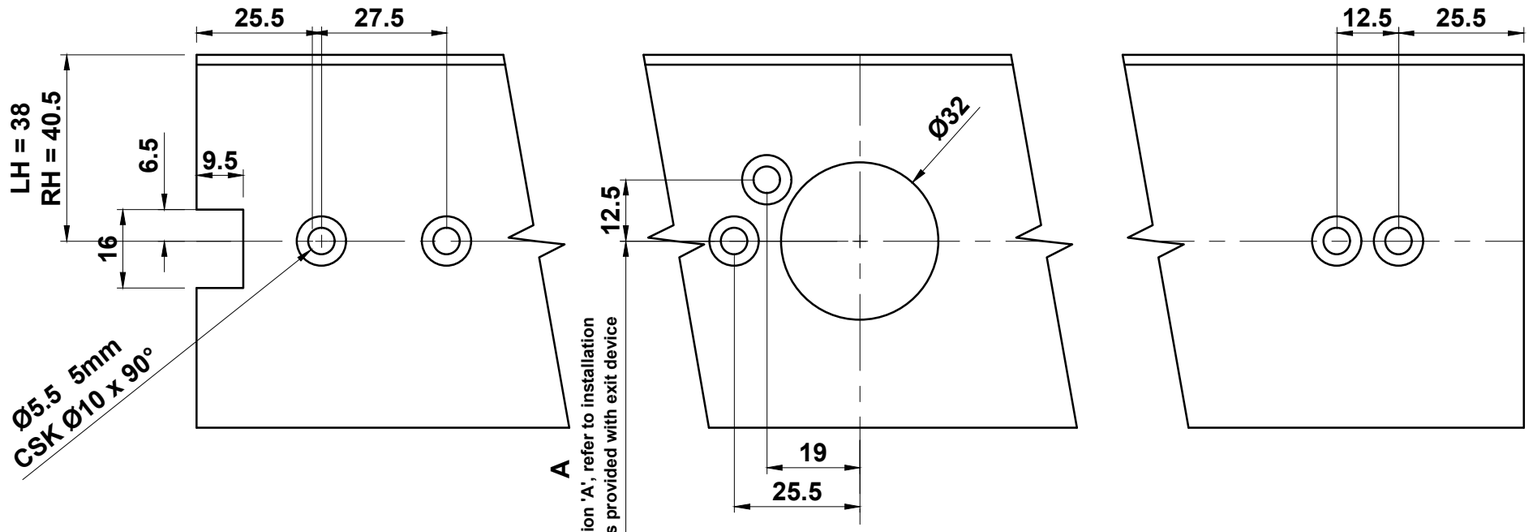

IMP037N

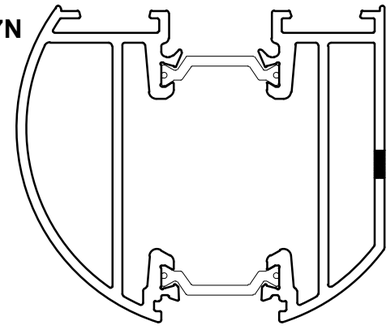

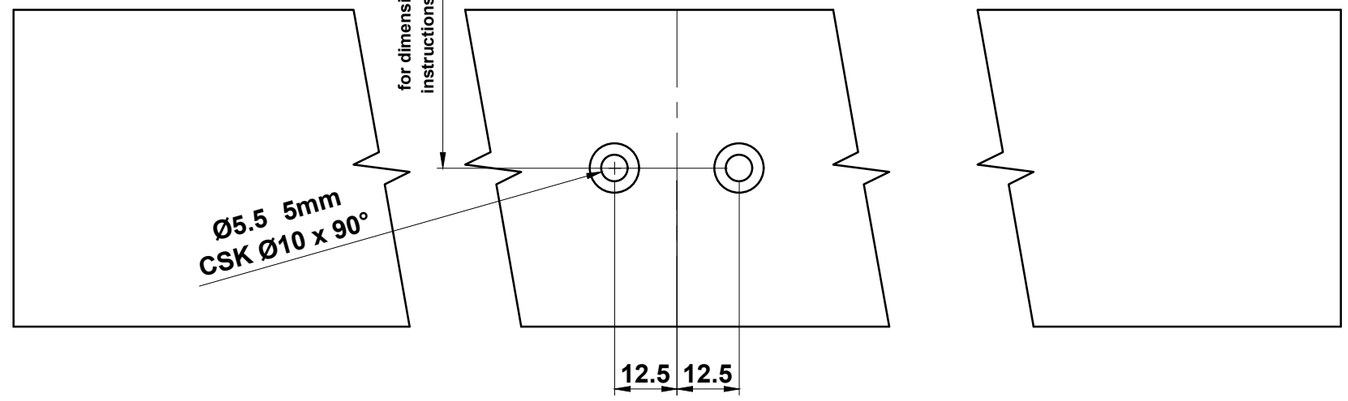

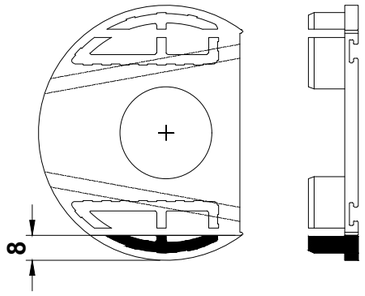

The end cap for IMP037N is ACIM009 cut flat to one side as shown depending on handing

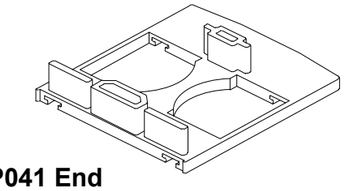

ACIM041 - IMP041 End cap fits to bottom only

Important note:
Please refer to manufacturers installation instructions provided with hardware for further information.

Opening Window Inserts

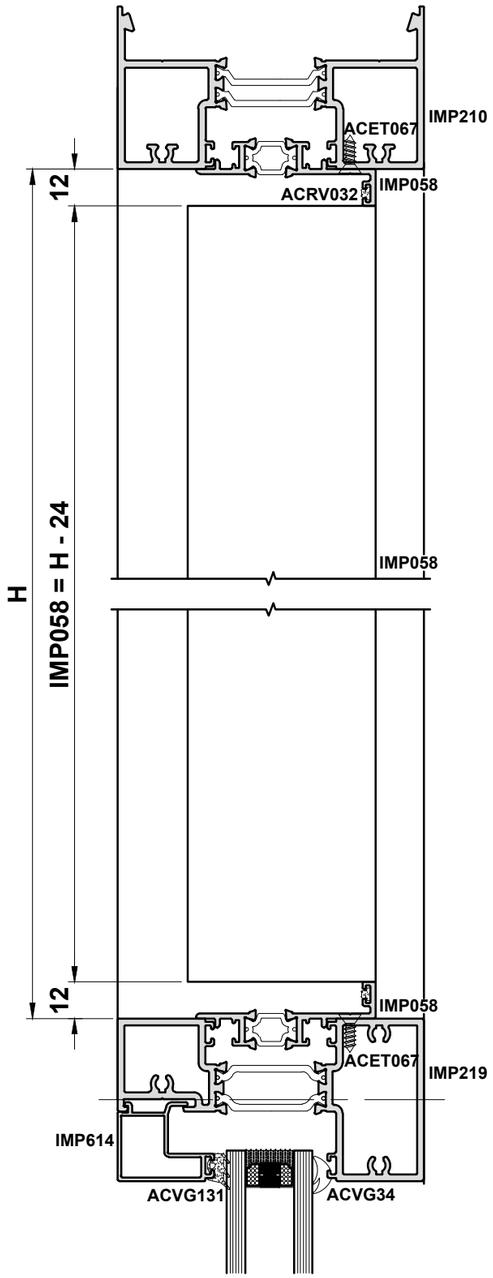

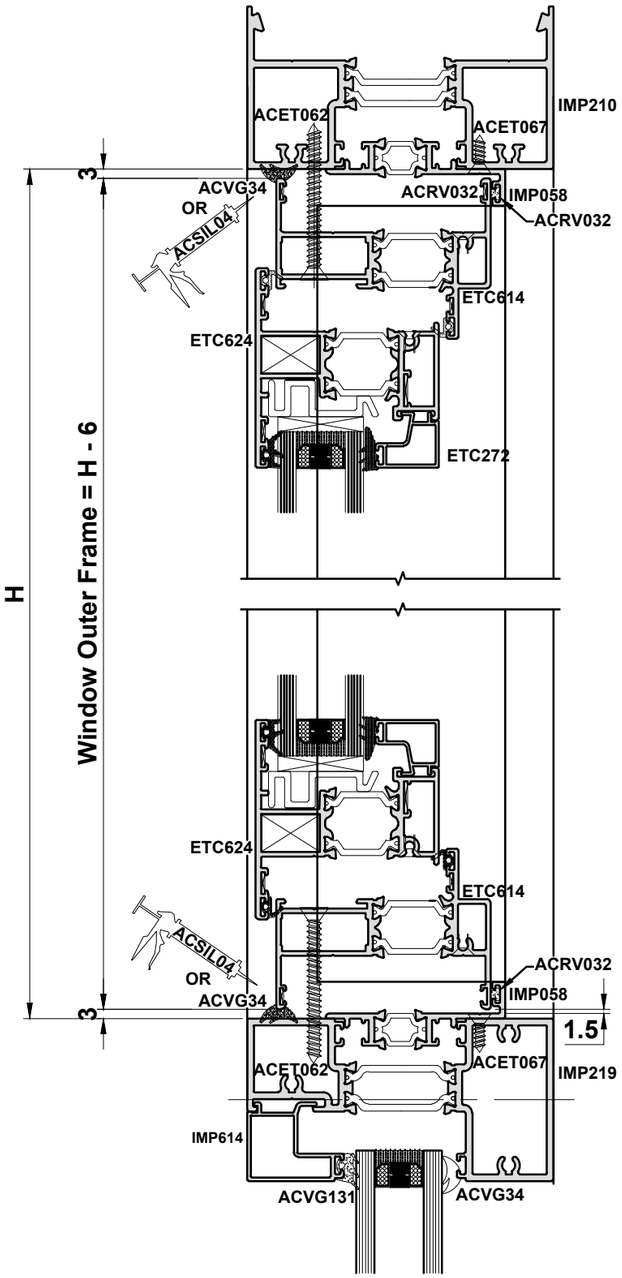

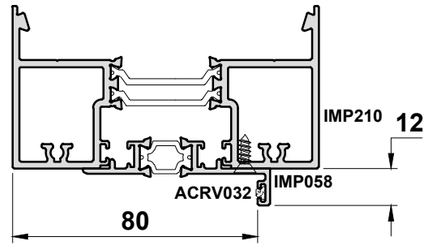

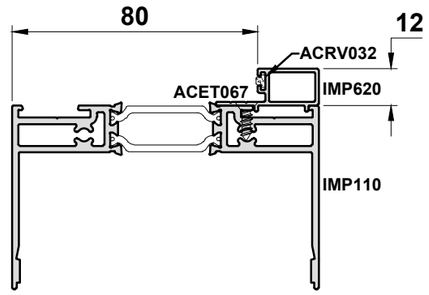

Detail Options Above Doors

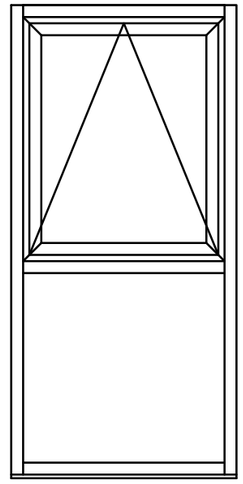

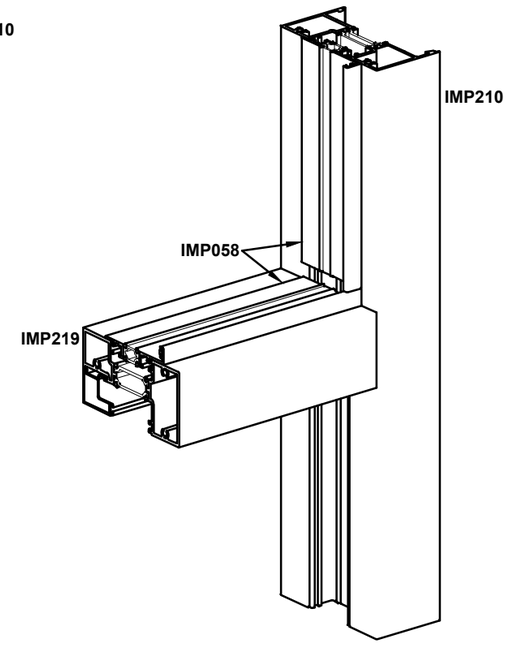

Internal View

Do Not Scale From This Drawing

Clear Opening Deductions

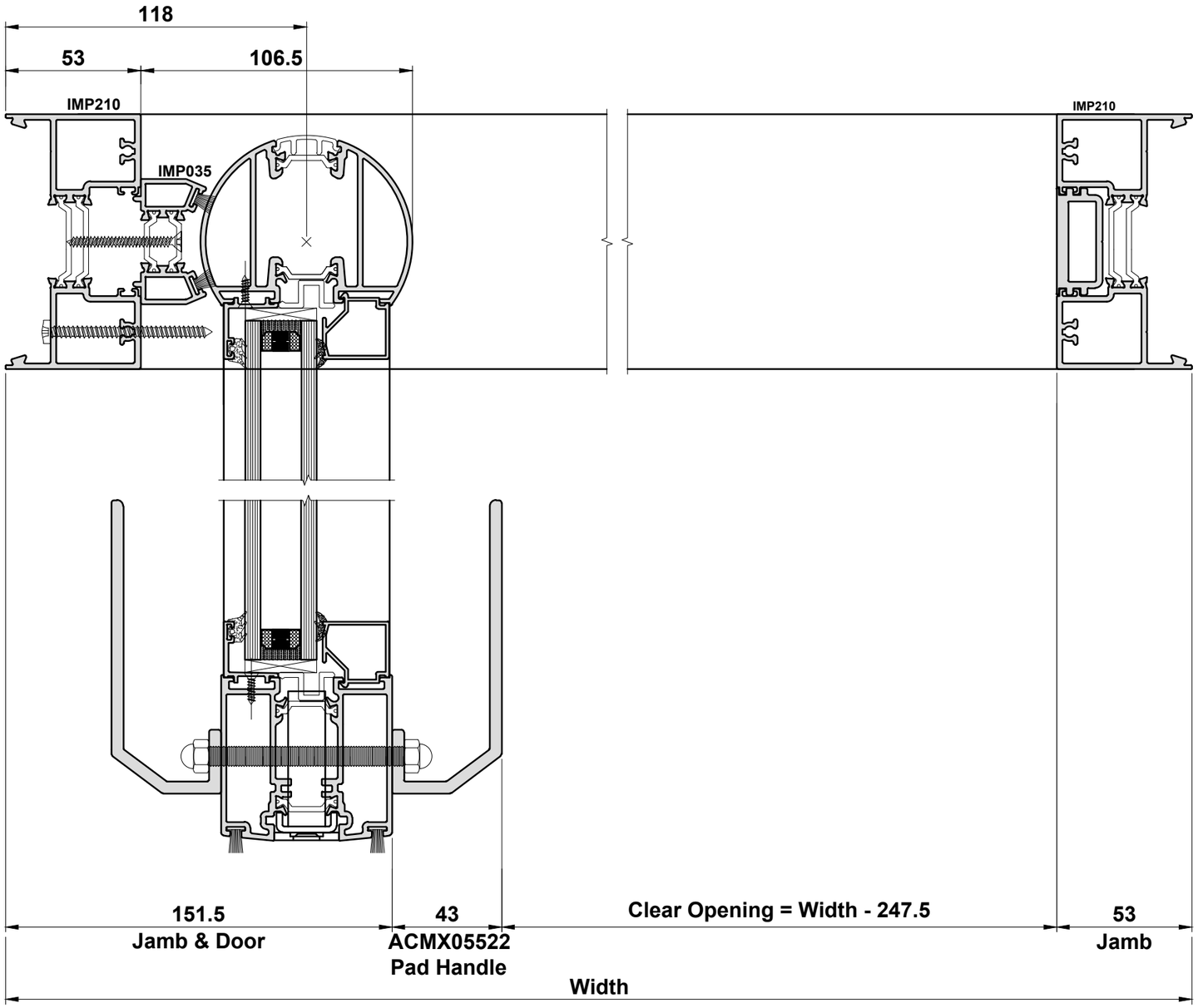

Document M Recommendations for External Doors		
	New Buildings	Existing Buildings
Commercial	1000	775
Domestic	775	

Example:

Calculation without Pad Handle:	
Frame Width	1212.5mm
- 2No.Jambs	106
- Pivot Centre	65
- Half Door Section	41.5
Clear Opening = 1000	

Calculation with Pad Handle:	
Frame Width	1247.5mm
- 2No.Jambs	106
- Pivot Centre	65
- Half Door Section	33.5
- Pad Handle	43
Clear Opening = 1000	

Calculation with ACVL122/3:	
Frame Width	1274.5mm
- 2No.Jambs	106
- Pivot Centre	65
- Half Door Section	33.5
- ACVL122/3	70
Clear Opening = 1000	

Do Not Scale From This Drawing

LPS1175 Level 2 & ENV1627 Level 3 Installation

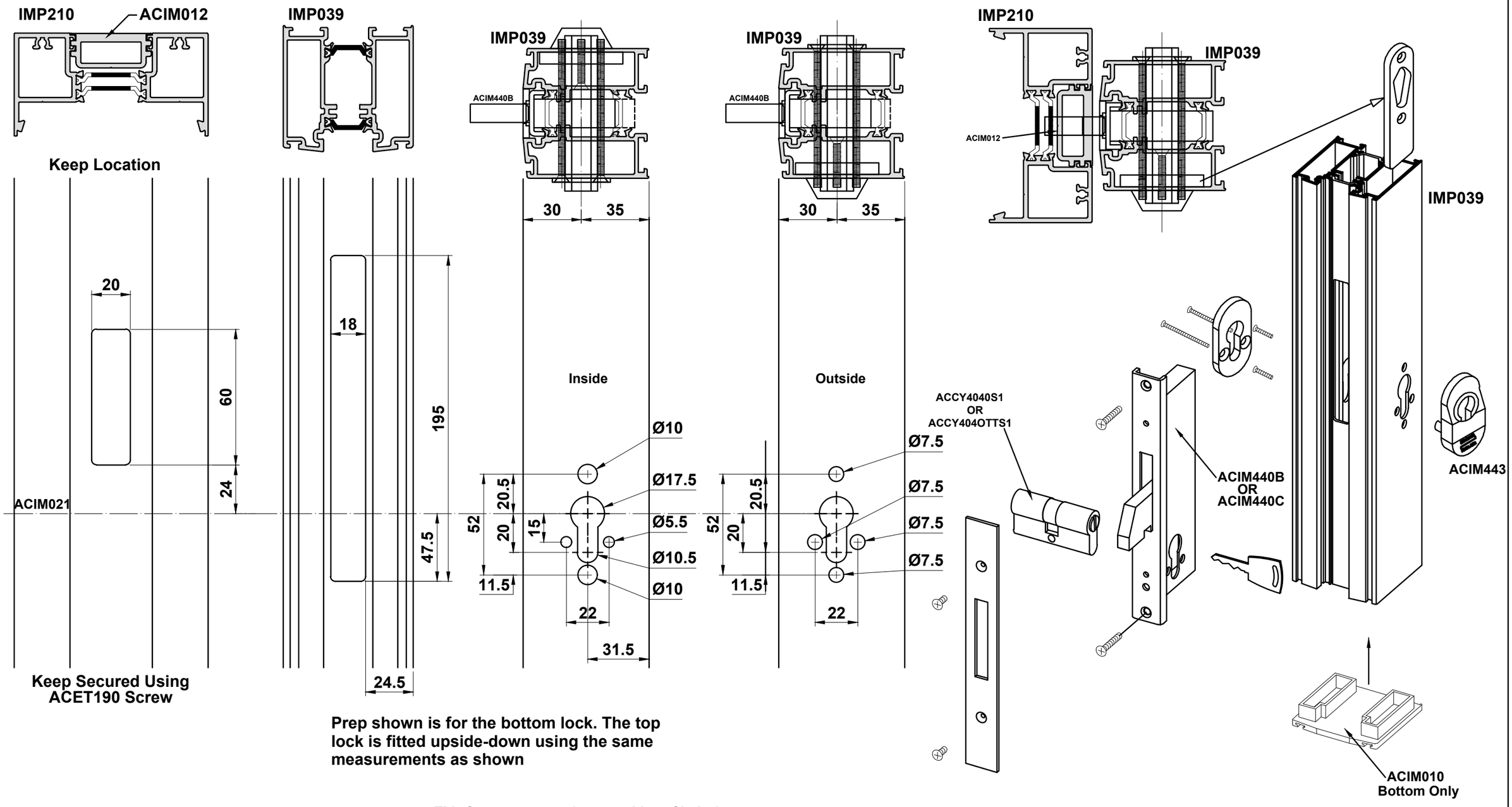

Prep shown is for the bottom lock. The top lock is fitted upside-down using the same measurements as shown

This face uppermost (note position of holes)

Do Not Scale From This Drawing

LPS1175 Level 2 & ENV1627 Level 3 Closer Preparation

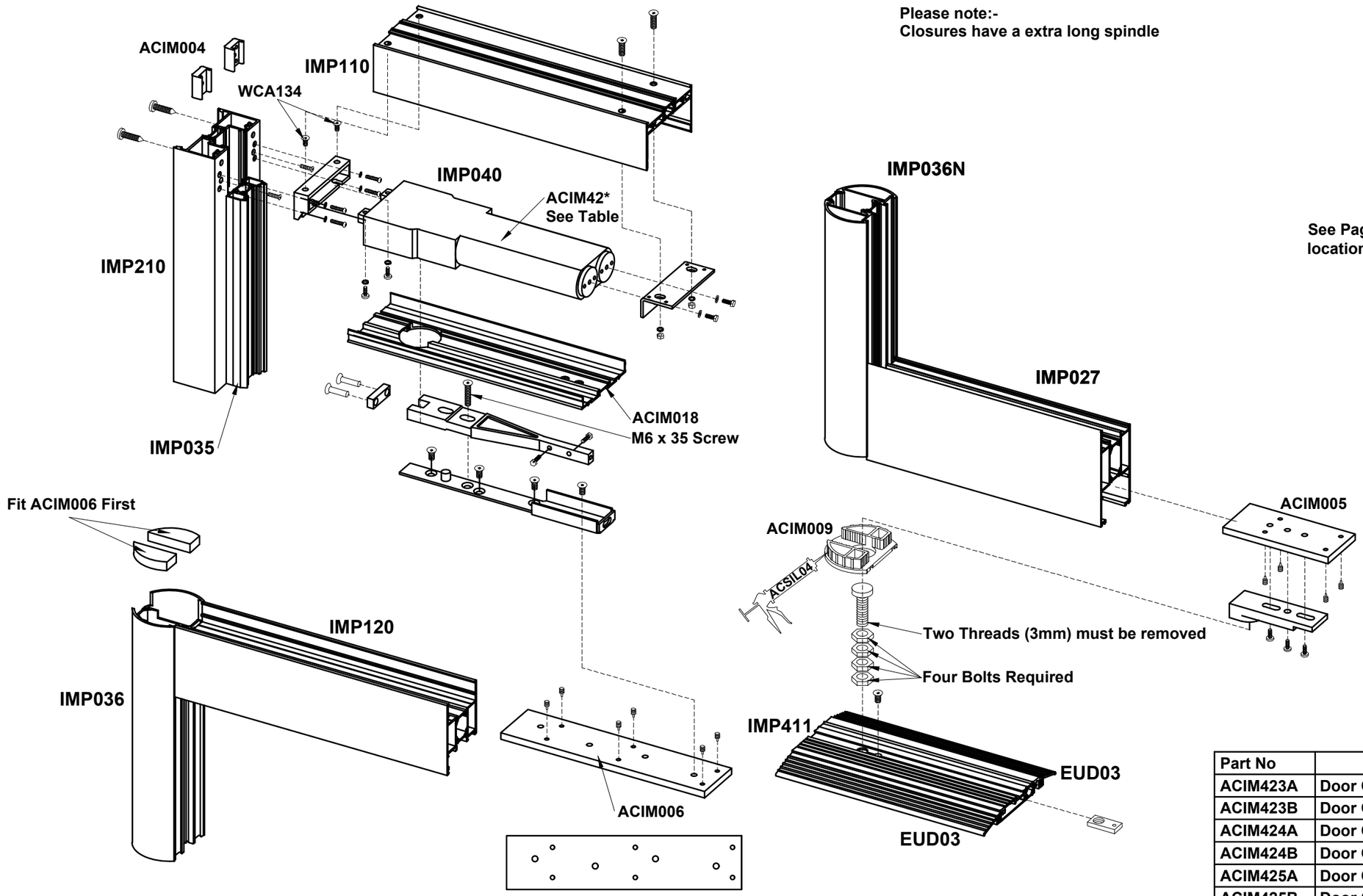

Please note:-
Closures have a extra long spindle

See Page E13 for IMP036N preparation and location details of ACIM005 & ACIM006.

Part No	Description
ACIM423A	Door Closer Not Hold Open 750/950
ACIM423B	Door Closer Hold Open 750/950
ACIM424A	Door Closer Not Hold Open 950/1150
ACIM424B	Door Closer Hold Open 950/1150
ACIM425A	Door Closer Not Hold Open <750
ACIM425B	Door Closer Hold Open <750

LPS1175 Level 2 & ENV1627 Level 3 Installation

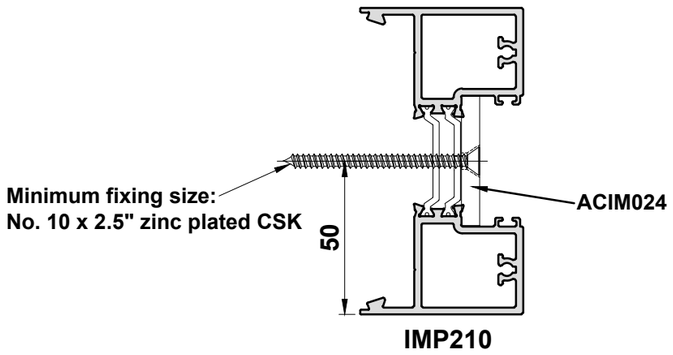

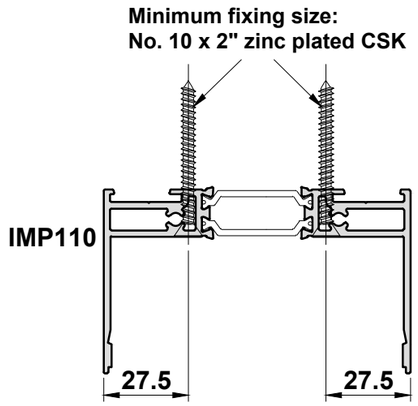

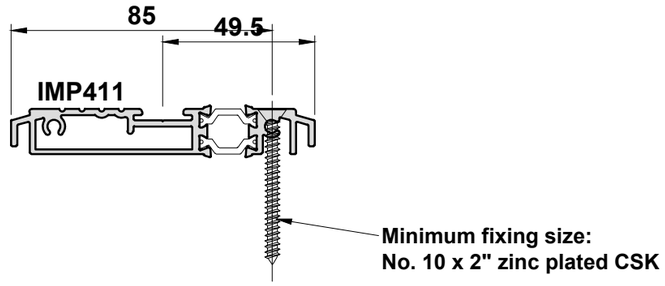

Installation Requirements:

1. Ensure outerframe is installed True and Plumb
2. Take time to check that diagonal measurements match
3. The frame should be direct fixed with fixing centres a minimum of 150mm in from each end and a maximum of 600mm centres
4. Fixings through IMP110 should be staggered
5. Site survey may require that reduced fixing centres may be necessary to suit location and/or surrounding structure
6. Only the jambs should be fixed through the thermal break using ACIM024 to strengthen

Do Not Scale From This Drawing

PAS24 Maglock Detail

1.

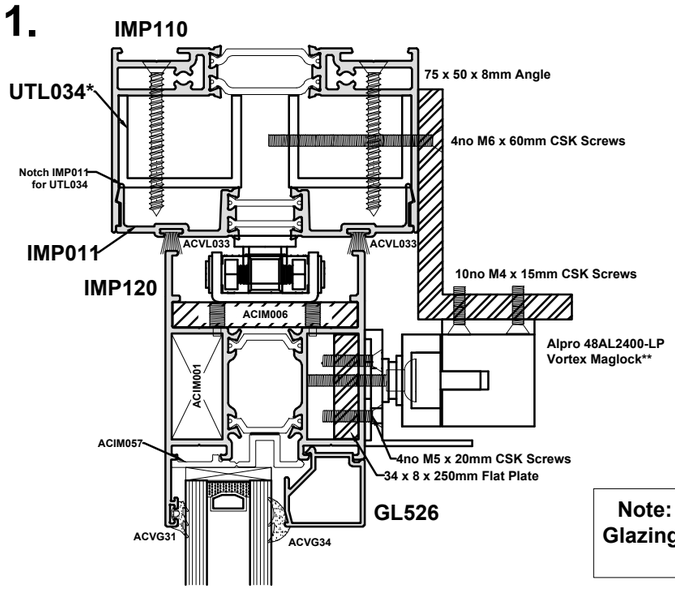

Note: To comply with PAS24:2016 GL526 Glazing bead and minimum glazing of Class P1A must be used.

2.

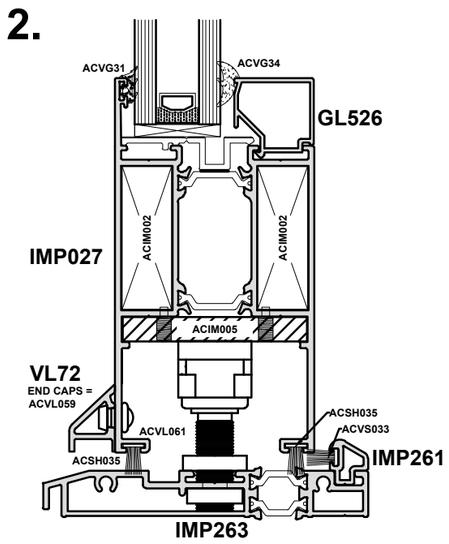

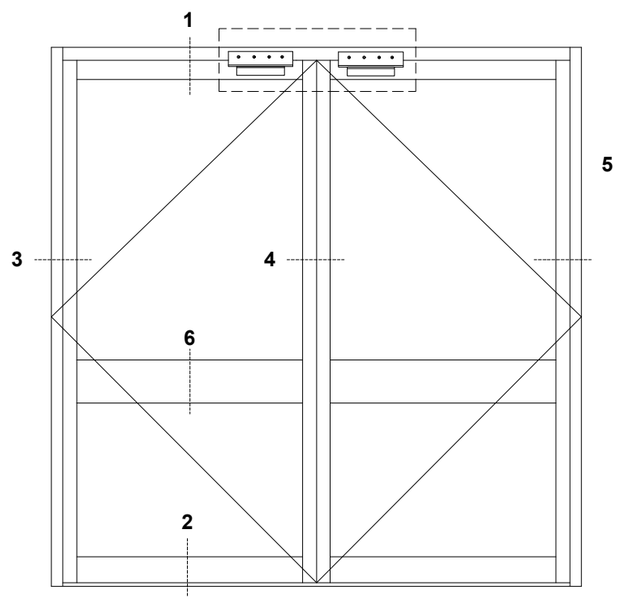

VIEWED FROM INSIDE

3.

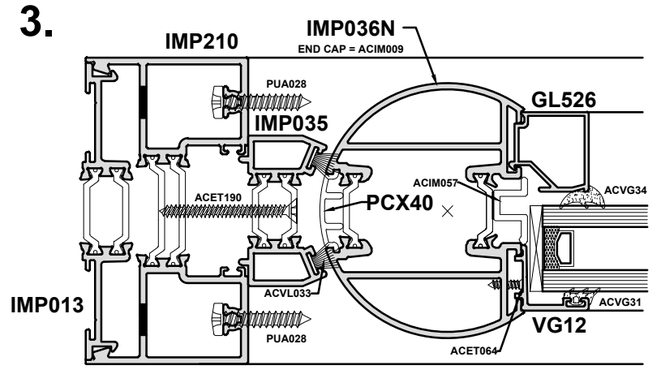

4.

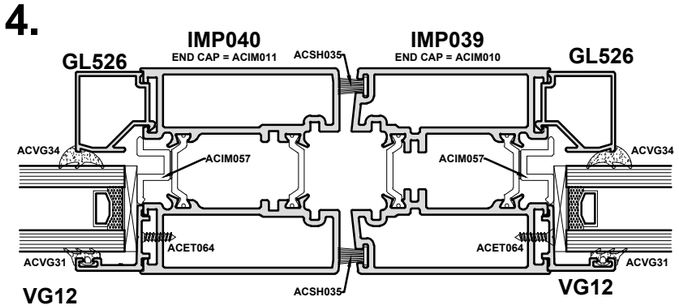

Alpro 48AL2400-LP Vortex Maglock**

5.

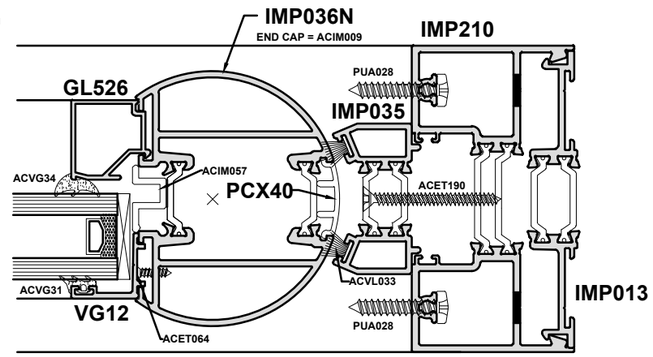

6.

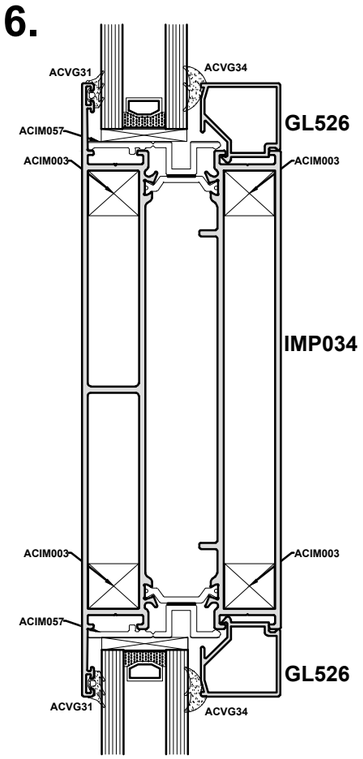

*UTL034 to be cut at 300mm lengths

**48AL2400-LP Maglock to be purchased from Alpro Distributor, please see www.alpro.co.uk or call 01202 676262 for further information.

Do Not Scale From This Drawing

PAS24 Panic Bar Detail

1a.

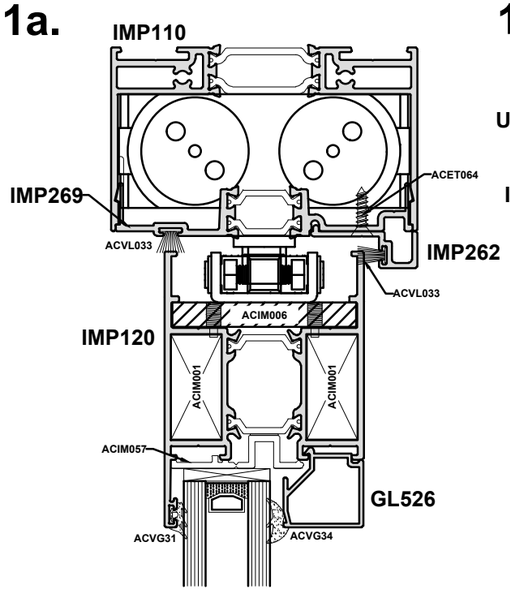

1b.

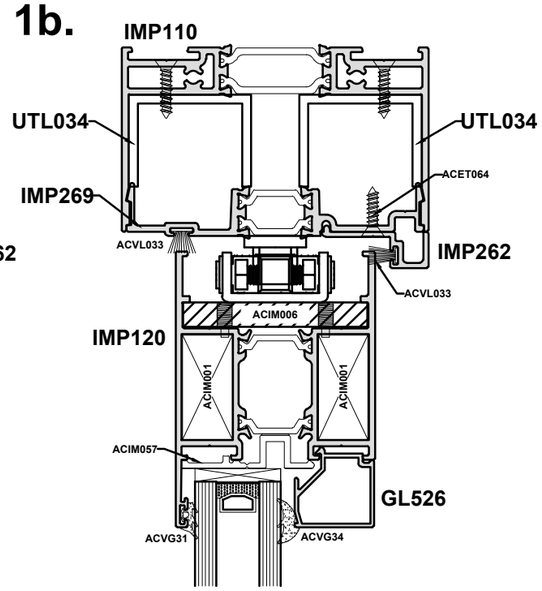

Sentinel 400TB Touch Bar**

2.

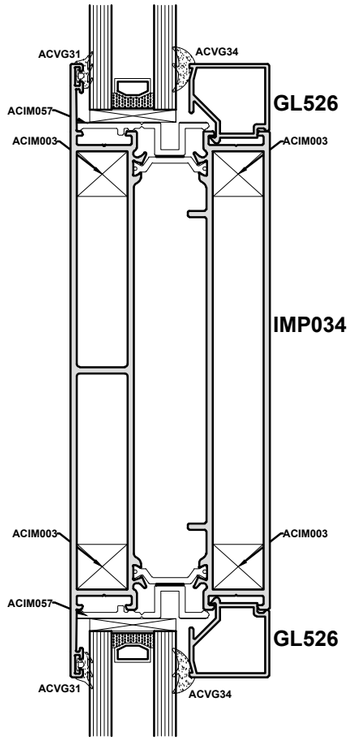

Sentinel 430a 3 Point Panic Lock and Keep**

Keep Machined into ECZ75

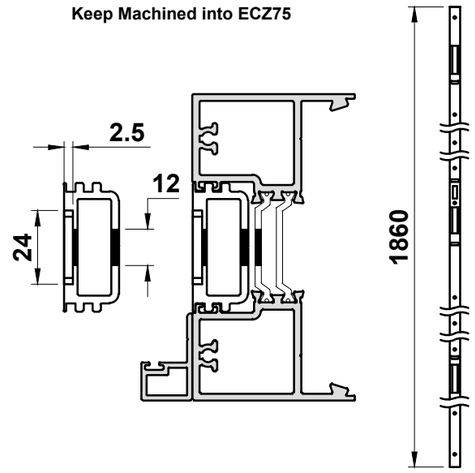

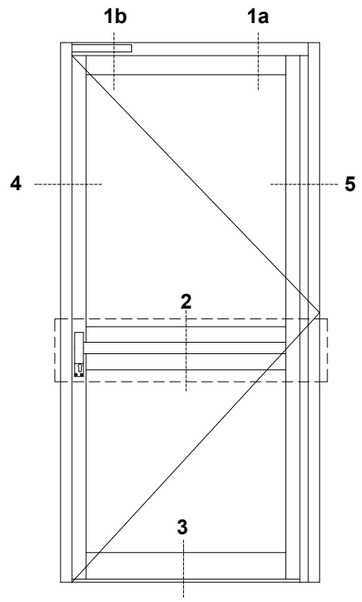

VIEWED FROM INSIDE

Left Hand Doorset

1 x 430A-24u31LO-SS	-	Left Hand EN1125 Escape Lock
1 x 400TB-BN1-BS	-	1200mim Touch Bar
1 x 400CS-NL1-BL	-	Left Hand Internal Cylinder Support
1 x 400ES-NN1-BL	-	External Cylinder Escutcheon
1 x 400LH-SAN1-BL	-	External Single Handle
1 x ARC51N OHCC	-	Overhead Concealed Transom Closer

Right Hand Doorset

1 x 430A-24u31RO-SS	-	Right Hand EN1125 Escape Lock
1 x 400TB-BN1-BS	-	1200mim Touch Bar
1 x 400CS-NR1-BL	-	Right Hand Internal Cylinder Support
1 x 400ES-NN1-BL	-	External Cylinder Escutcheon
1 x 400LH-SAN1-BL	-	External Single Handle
1 x ARC51N OHDC	-	Overhead Concealed Door Closer

Note: To comply with PAS24:2016 GL526 Glazing bead and minimum glazing of Class P1A must be used.

3.

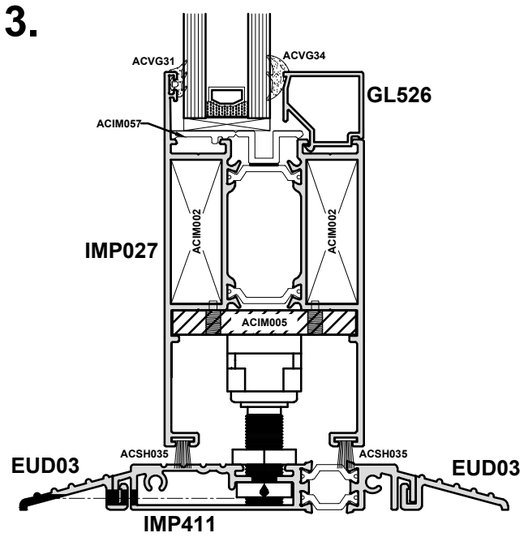

4.

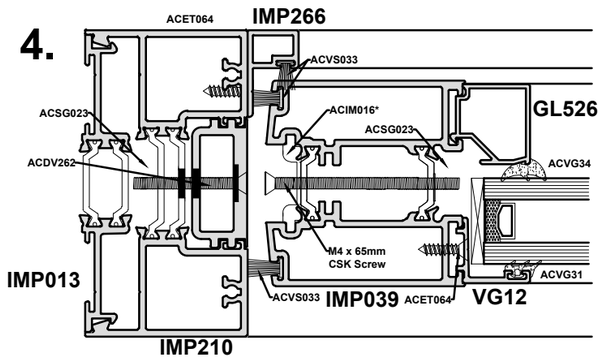

***ACIM016**
Remove legs for lock packer

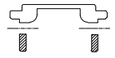

5.

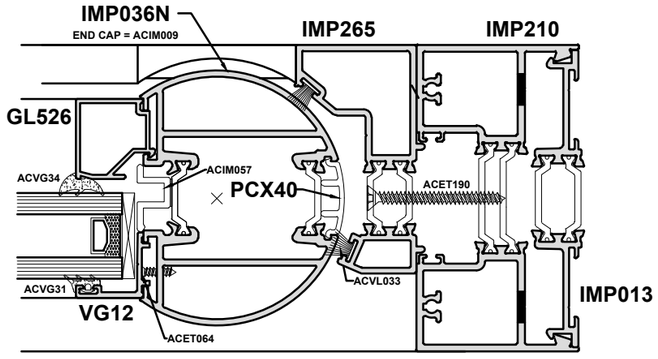

***UTL034 to be cut at 300mm lengths**

****Sentinel components to be purchased directly from Adams Rite, please see www.adamsrite.co.uk or call 0845 873 4838 for further information**

Do Not Scale From This Drawing

Autoslide PAS24:2016 Overview

When specifying Auto-Slide doors to PAS 24:2016, please note as follows:-

- Please contact Dormakaba to ensure door proposed is within gearing parameters
- Dormakaba will carry out a site risk assessment to ensure compliance with EN12101-2
- Specify bracket finish when ordering (to match frame finish)
- Bracket and fixing kits must be supplied to Dormakaba to allow installation on site with doors

Dormakaba
Tel: 01462 477600
Email: info.gb@dormakaba.com

Single Door

Requires:
1 x ACIM272
1 x ACIM280

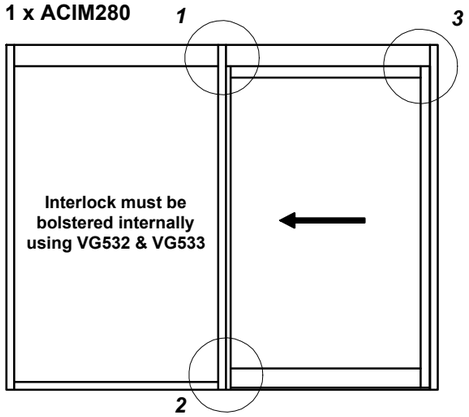

	ACIM272		
	Part No.	Qty	Loc.
C Bracket	ACIM501	1	1
	ACIM502	2	1
	ACIM503	2	1
	ACIM504	1	1
	ACIM505	1	1
	ACIM506	2	3
	ACIM507	1	2

	ACIM271		
	Part No.	Qty	Loc.
C Bracket	ACIM501	2	1
	ACIM502	4	1
	ACIM503	4	1
	ACIM504	2	1
	ACIM505	2	1
	ACIM507	2	2
	ACIM508	1	4

ACIM280		
Part No.	Description	Qty
ACET064	No.8 x 5/8" CSK Pozi Self Tapper	4
PUA028	No.10 x 1" SS Pan Head Self Tapper	10
ACUN3517	M6 x 30mm CSK Pozi Machine Screw	2
ACUN3518	M6 x 50mm Hex Head Bolt	4
ACUN3519	M6 Penny Washer	32
ACUN3520	M6 Nut	18
ACUN3522	M6 x 30mm Hex Head Bolt	12
HEA390	M6 x 16mm Socket CSK Machine Screw	2

Double Door

Requires:
1 x ACIM271
2 x ACIM280

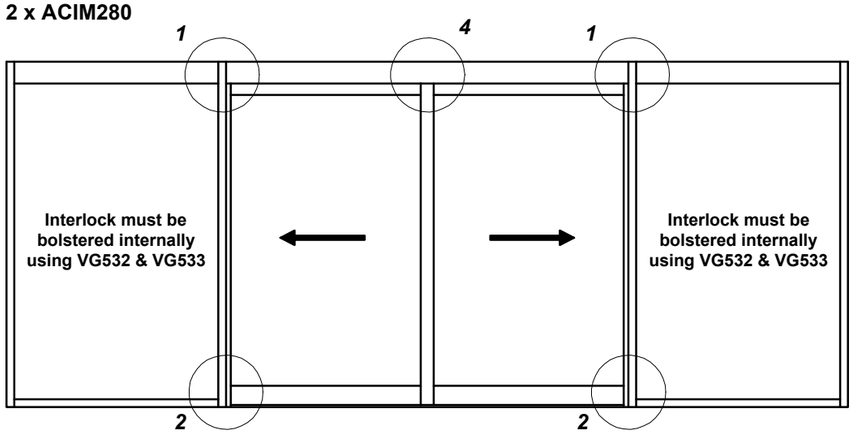

C Bracket Assembly - Location 1

1. Fix ACIM503s to ACIM504 using M6 x 16 CSK machine screws and M6 Nuts

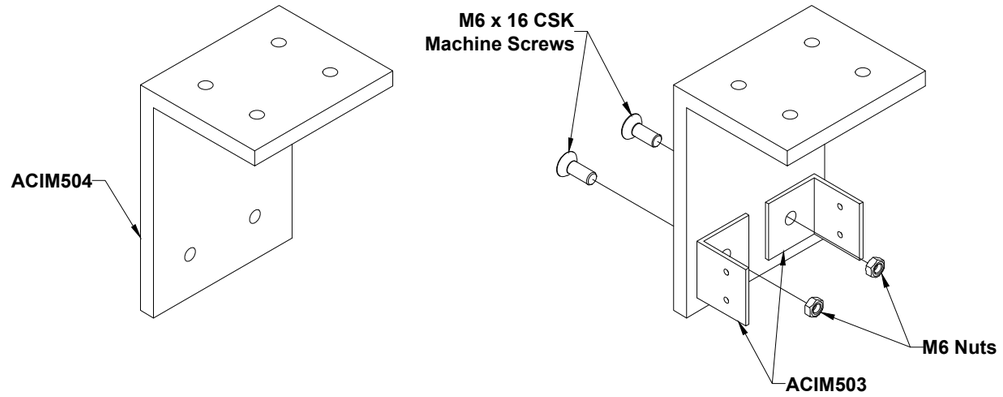

2. Fix ACIM501 to ACIM503 using 4x No.8 x 5/8 CSK Pozi Self Tapper

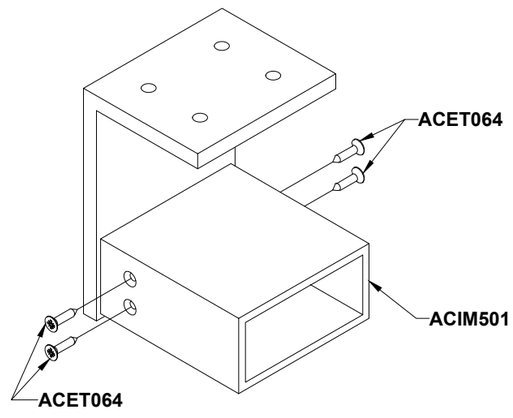

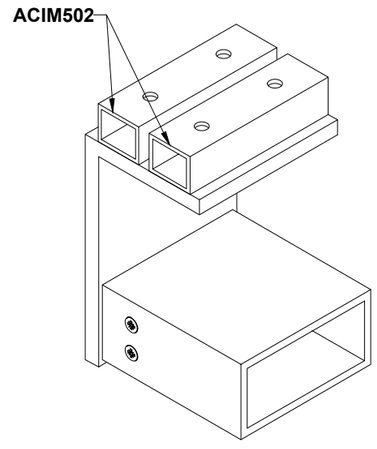

Do Not Scale From This Drawing

Autoslide PAS24:2016 Bracket Installation

Location 1

1.
Place ACIM505 on ES200 extrusion, ensuring that it is centrally aligned to interlock

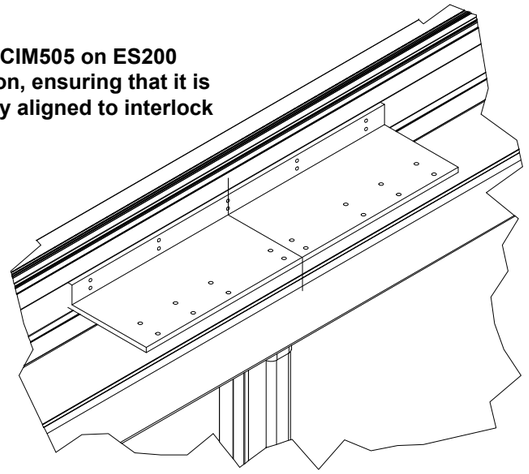

2.
Fix ACIM505 to IMP115 Header bar using 10 x PUA028. Depending on the space available on site, either up drill or down drill Ø7mm holes through additional holes in ACIM505 into ES200 extrusion. It is not critical to use pre-drilled holes in ACIM505.
Fix in place using M6x30 Bolts, M6 Washers and M6 nuts

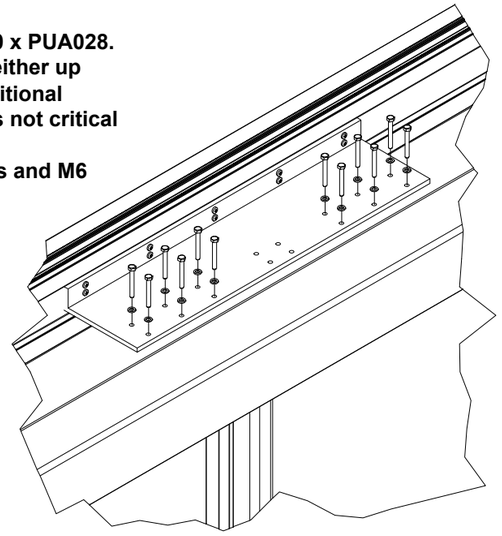

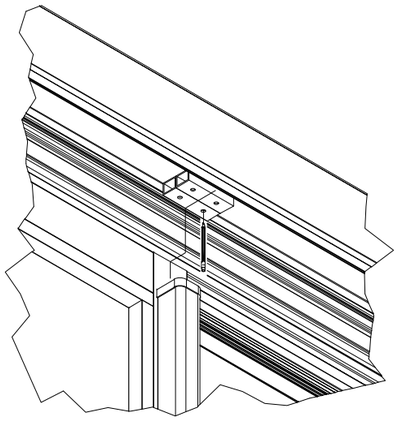

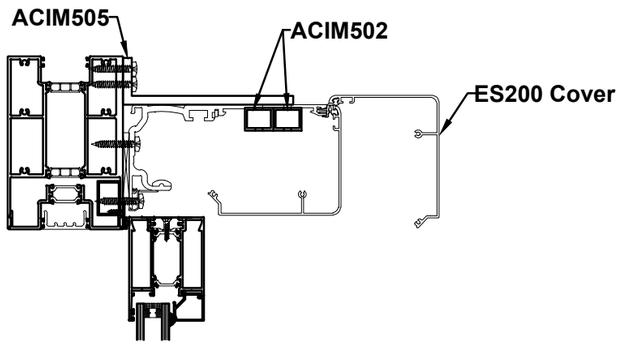

3.
Open ES200 cover.
Position both ACIM502s in the location shown and mark hole positions onto underside of ES200 cover.
Drill these marked locations through ES200 cover to Ø7mm

4.
Position C bracket assembly in location shown, ensuring that the open face of the C bracket is 5mm away from the interlock. Fix in place using M6x50 Bolts, M6 Washers and M6 Nuts

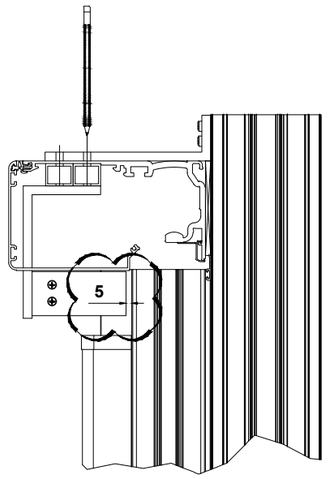

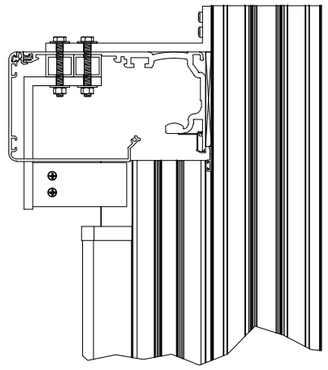

Do Not Scale From This Drawing

Autoslide PAS24:2016 Bracket Installation

Location 2

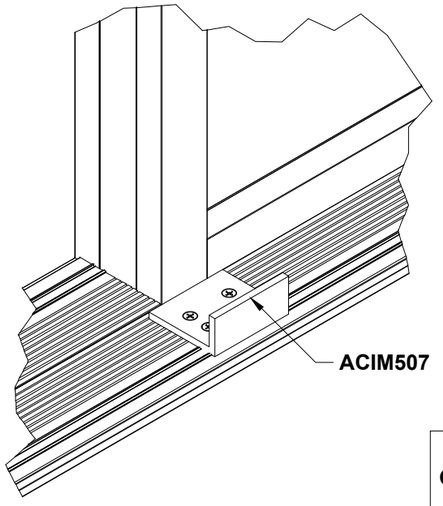

5.
Place ACIM507 on threshold ensuring that it is centrally aligned with the interlock. Allow 5mm between internal face of ACIM507 and sliding door

Note: To comply with PAS24:2016 GL526 Glazing bead and minimum glazing of Class P1A must be used.

6.
Fix ACIM507 in place using appropriate fixings for the structure.

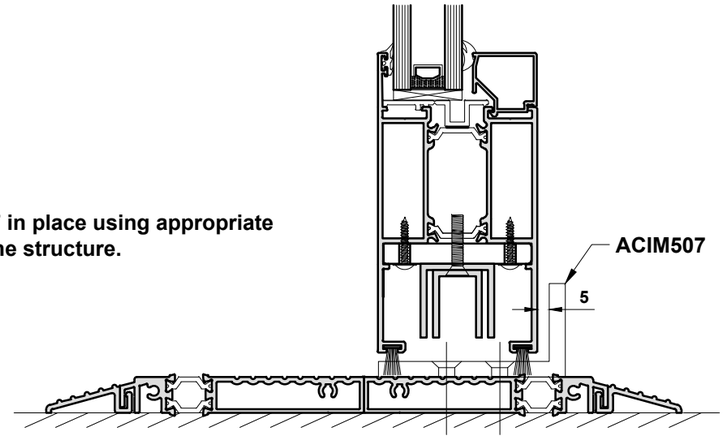

Location 3 & 4

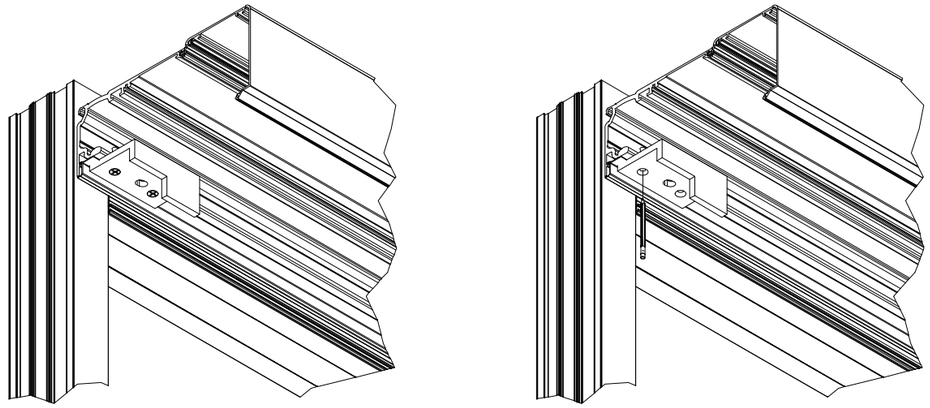

7.
Engage BT lock and mark the location(s) of the top locking point(s) in ES200 extrusion. Disengage and slide door(s) aside.
Position ACIM506L/R (Single) or ACIM508 (Double), aligning slot(s) in ACIM506/ACIM508 to marked location(s) on ES200 extrusion. Mark hole and slot locations in ES200 extrusion

Locking Slot

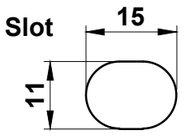

8.
Drill and tap hole locations to M6.
Drill out slot(s).
Fix ACIM506/ACIM508 to ES200 extrusion using M6 X 30 CSK Pozi Machine Screws

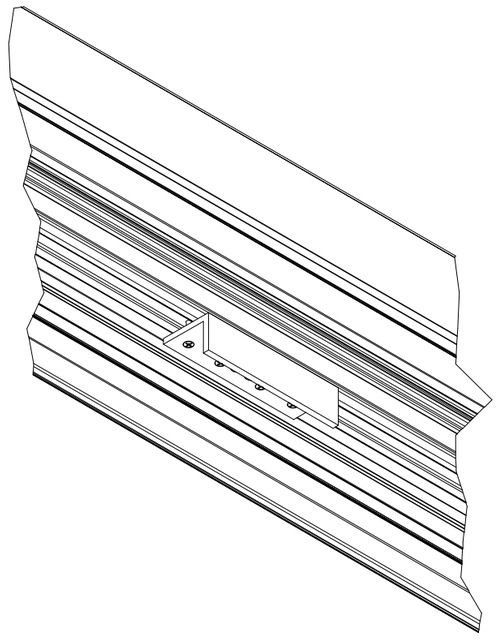

Do Not Scale From This Drawing

Autoslide PAS24:2016 Locking

Threshold Prep for BT Lock

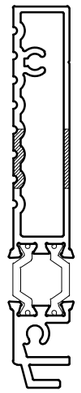

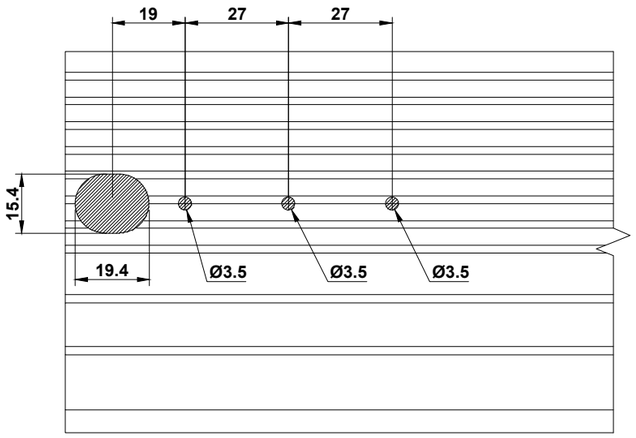

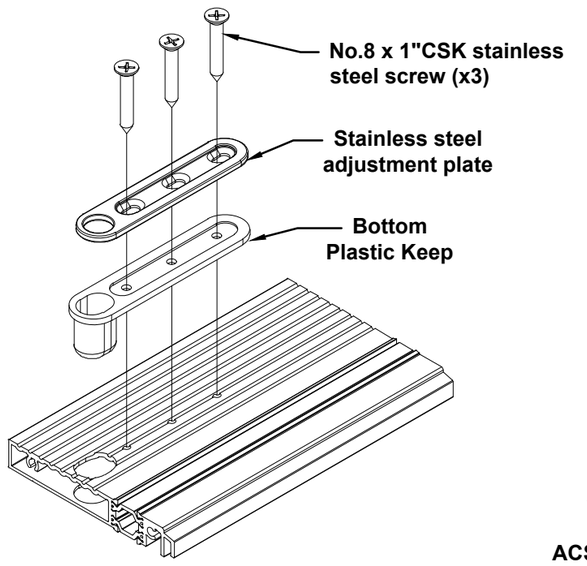

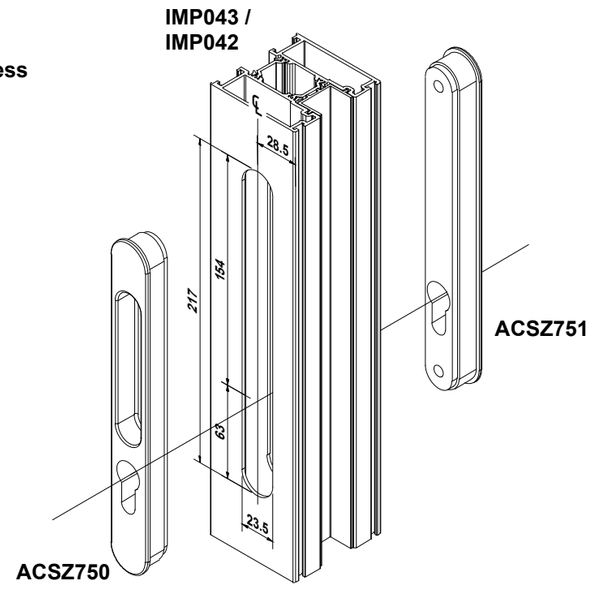

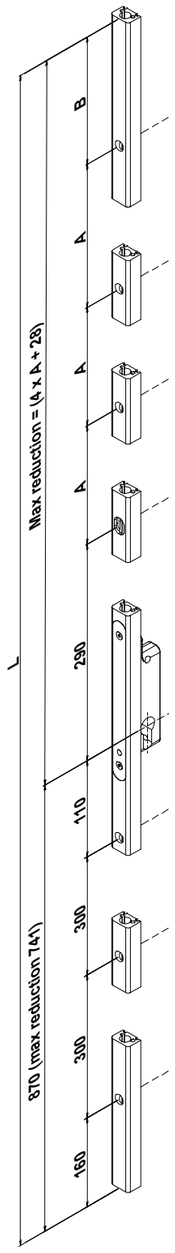

ACSZ049 Fixing Kit

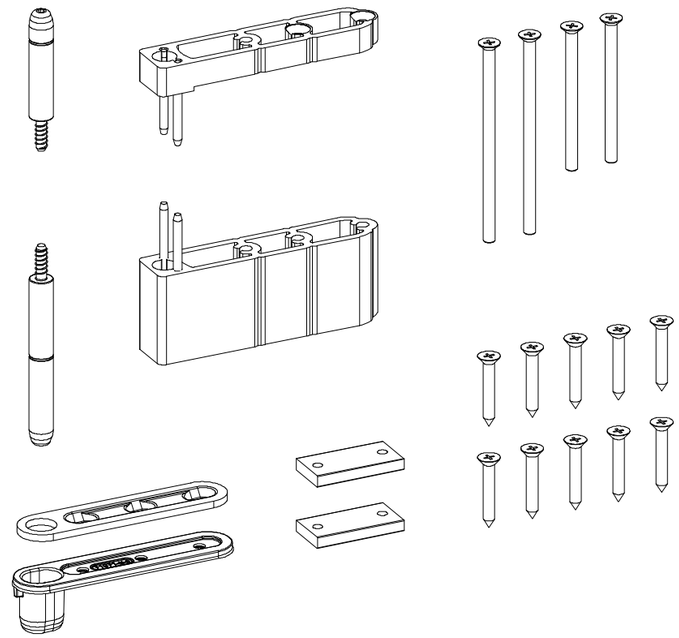

Lock Kit	L	A	B
ACSZ040	2300	300	240
ACSZ041	2700	400	340
ACSZ042	3100	500	440

1. The lock is cut to size together with the rods without removing an parts.
2. The cylinder height can be reduced by cutting up to 741mm from the bottom of the lock.

Do Not Scale From This Drawing

PAS24 2016: Double & Single Door Requirements

Single Door

Accessories Required to Achieve PAS24:2016

A	Closer Kit	ACIM423, 424, 425, 426
B	Cylinder & Escutcheon	ACCY4040S1 & ACIM443
C	Lock & Keep	ACIM440 x 2 & ACIM008 x 2

The details on this page show the specific hardware required to achieve PAS24:2016. Hardware not shown is standard.

Double Door

Accessories Required to Achieve PAS24:2016

A	Closer Kit	ACIM423, 424, 425, 426
B	Cylinder & Escutcheon	ACCY4040S1 & ACIM443
C	Lock & Keep	ACIM440 x 2 & ACIM008 x 2
D	Shoot Bolts	ACVL426 x 1 & ACVL127 x 2

Note: To comply with PAS24:2016 GL526 Glazing bead and minimum glazing of Class P1A must be used.

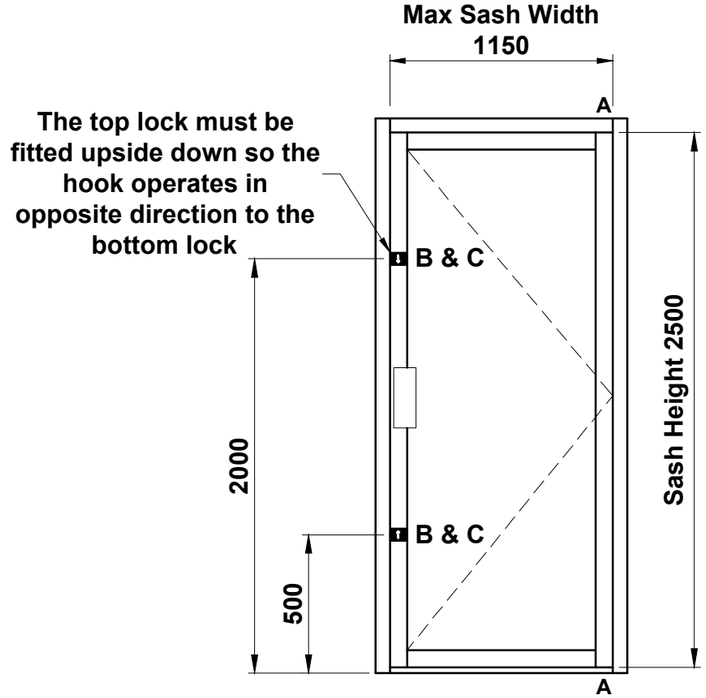

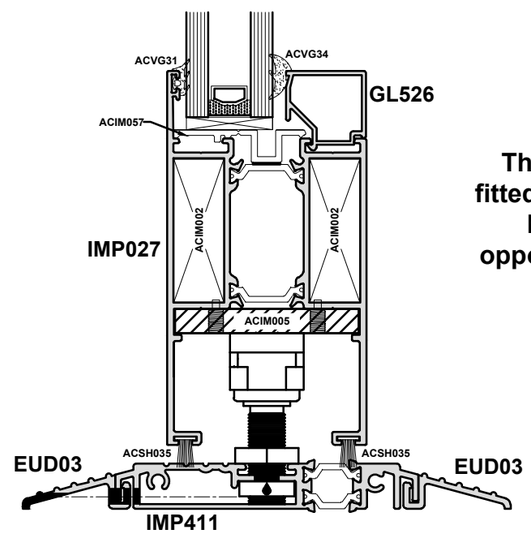

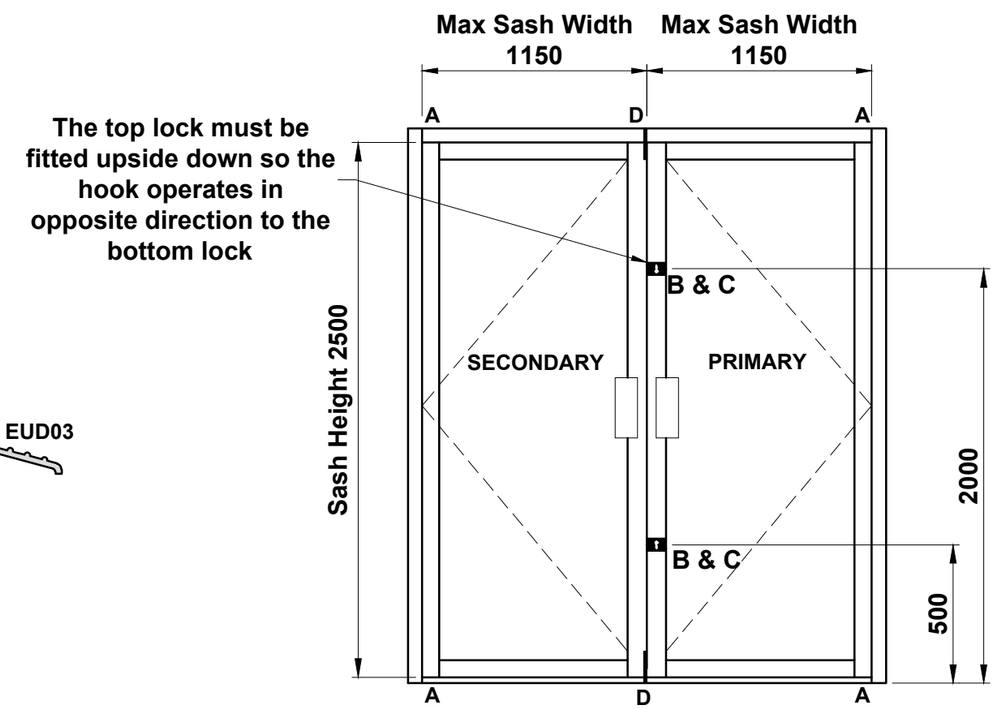

Do Not Scale From This Drawing

Example Layout

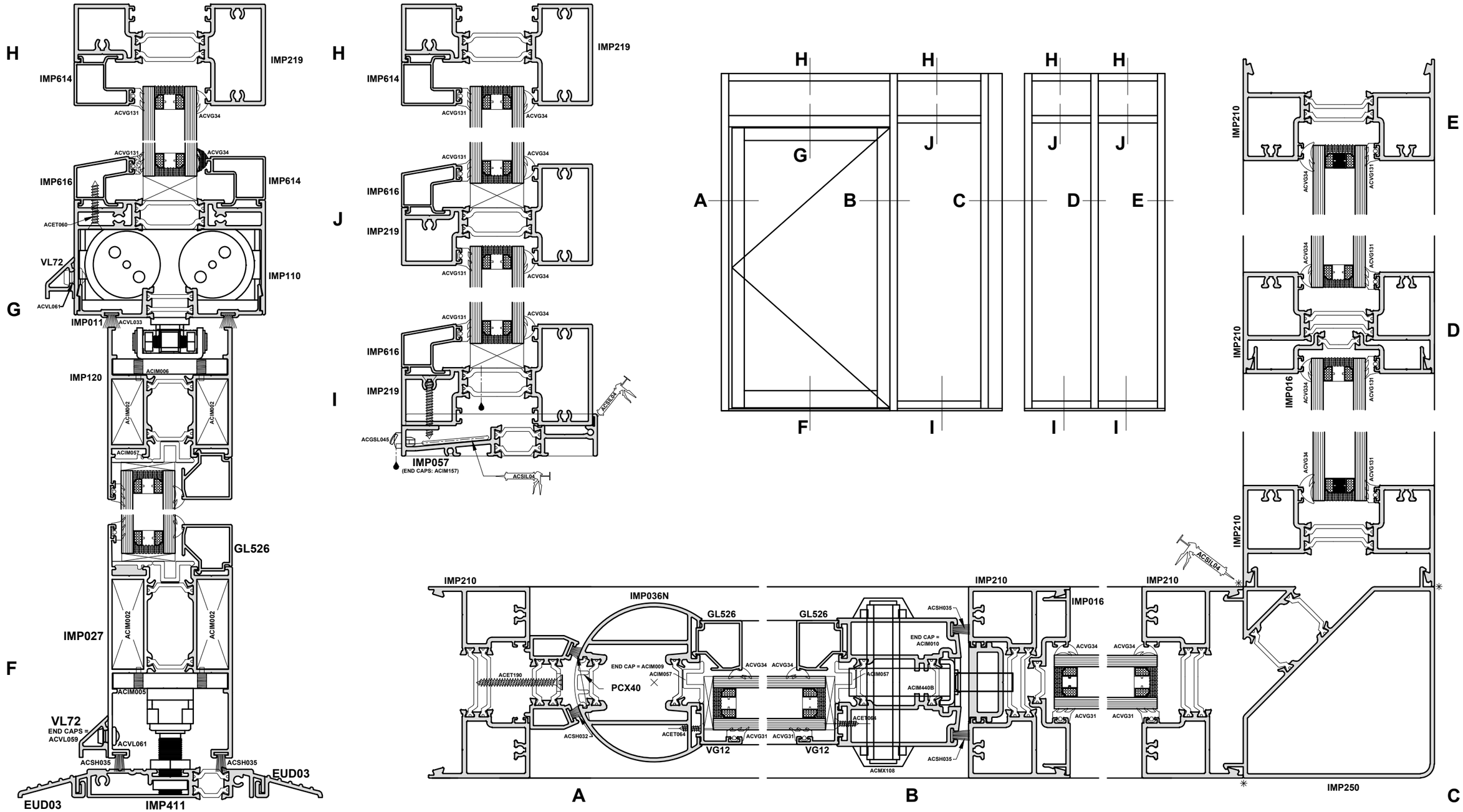

Do Not Scale From This Drawing

Section F

F IMP

Sawing Tables

Single Manually Operated Swing Door..... F03
Double Manually Operated Swing Door..... F04
Single Automatic Swing Door..... F05
Double Automatic Swing Door..... F06
Single Automatic Slide Door..... F07
Bi-Parting Automatic Slide Door..... F08
Single Rebated Hinged Door..... F09
Double Rebated Hinged Door..... F10
Single Rebated Anti-Finger Trap Door..... F11
Double Rebated Anti-Finger Trap Door..... F12
Single Autoslide Door PAS24:2016..... F13
Double Autoslide Door PAS24:2016..... F14

Section F

Single Manual Swing Door

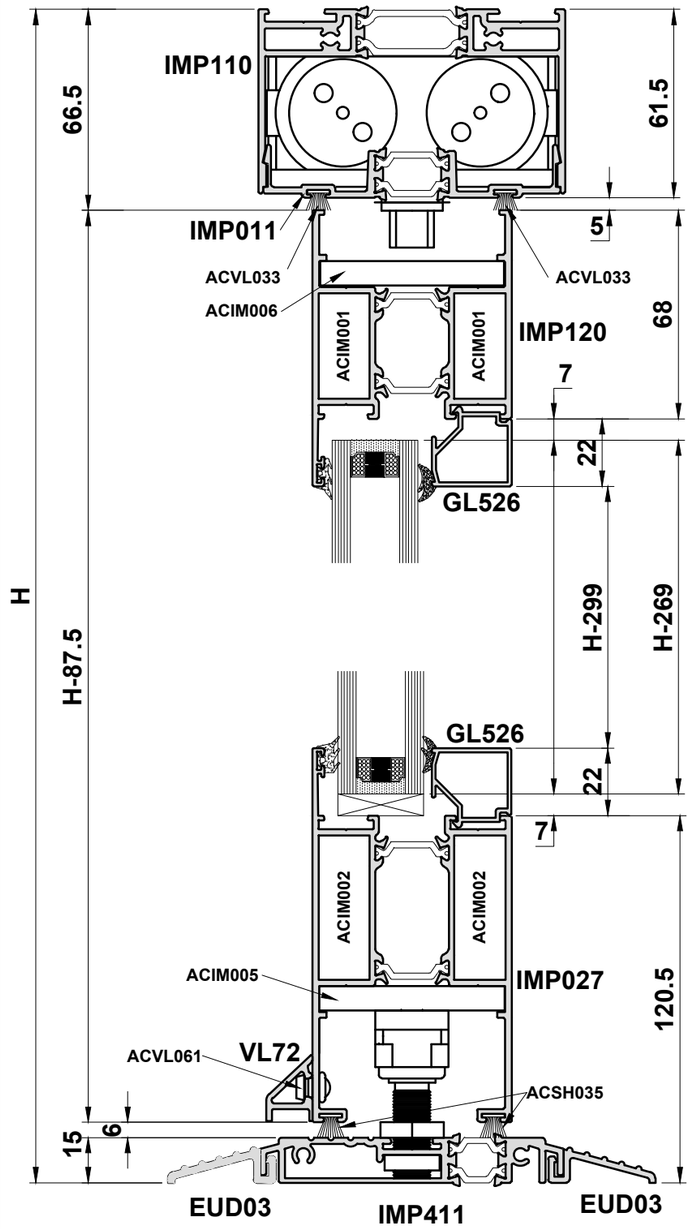

Profile Cutting Schedule

EUD03		2		W-106
IMP110		1		W-106
IMP011		1		W-406
IMP013 (Optional)		2		H
IMP027		1		W-263
IMP034		1		W-263
IMP035		1		H-76.5
IMP036N		1		H-92
IMP039		1		H-92
IMP120		1		W-263
IMP210		2		H
IMP300		1		H-92
IMP301		1		H-76.5
IMP411		1		W-106
GL526		2		W-263
GL526		2		H-299
PCX40		1		H-108
VG12		2		H-299
VL72		1		W-211
VL72		1		W-10

With IMP032/IMP034

IMP032/IMP034		1		W-263
GL526		2		W-234
GL526		2		IMP032 H1-185 / IMP034 H1-256.5
GL526		2		IMP032 H2-171 / IMP034 H2-242.5

Glass Size

Without Mid-rail	W-277	H-269
With IMP034 Mid-rail	W-277	H1-226.5
		H2-212.5
With IMP032 Mid-rail	W-277	H1-154.5
		H2-140.5

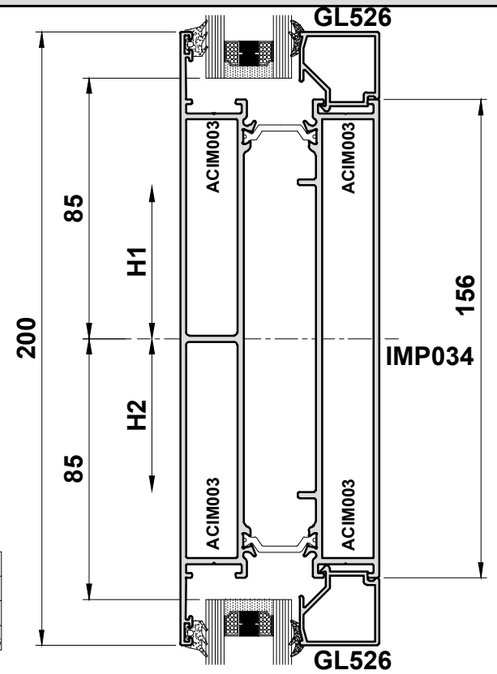

IMP034 Accessories

ACIM003	8	IMP034 Cleat

IMP032 Accessories

ACIM032	4	IMP032 Bracket

Accessories

ACDR052	8	Screws	
ACET064	300 ctrs	Bead Screw	
ACET190	300 ctrs + 5	Polyamide Screw	
ACIM001	4	IMP120 Cleat	
ACIM002	4	IMP027 Cleat	
ACIM004	2	Securing Block	
ACIM005	1	Floor Plate	
ACIM006	1	Closure Plate	
ACIM009	1	End Cover	
ACIM010	1	End Cover	
ACIM012	1	Keep	
ACIM018	1	Cover Plate	
ACIM021	2	AFT Foam Infill	
ACIM022	2	Lock fix bracket	
ACIM030	1	Fixing Rod/Nuts	For Pad Handle
ACIM057	4	Bridge Packer	
ACIM42*	1	Over head Closer	Various Sizes
ACIM440B	1	Lock	
ACIM442 Or	1	Cylinder	No Thumb Turn
ACIM445	1	Cylinder	With Thumb Turn
ACMX05520 Or	2	Pad Handles	100mm
ACMX05522	2	Pad Handles	200mm
ACMX108	2	Cover	
ACSH035	2	Wool-pile	W-242
ACSH035	2	Wool-pile	H-76
Ref' Glazing Table Page 99	2	External Gasket	H-296
Ref' Glazing Table Page 99	2	External Gasket	W-286
Ref' Glazing Table Page 99	2	Internal Gasket	H-296
Ref' Glazing Table Page 99	2	Internal Gasket	W-286
ACVL059	2 pr	End Cap	
ACVL033	2	Wool-pile	W-106
ACVL033	2	Wool-pile	H-76
ACVL061	8	Rivets	2(W/300)
WCA134	6	M5 x 20	

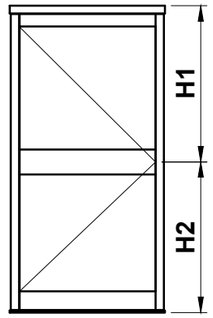

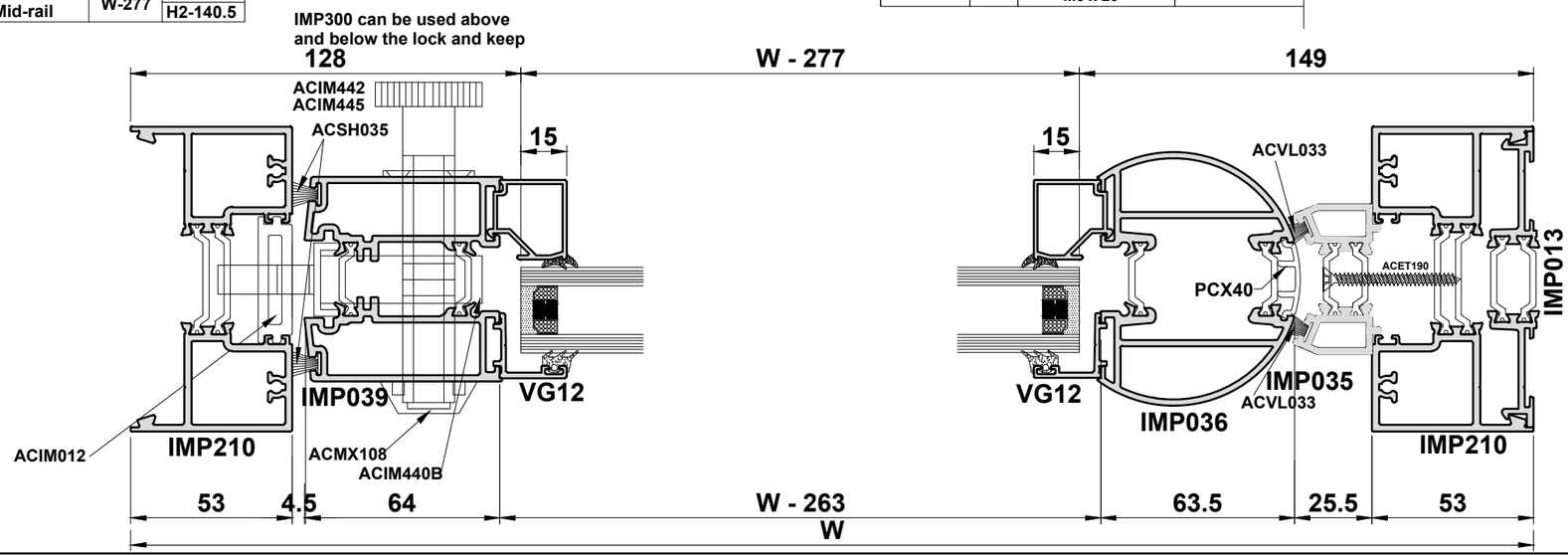

Do Not Scale From This Drawing

Double Manual Swing Door

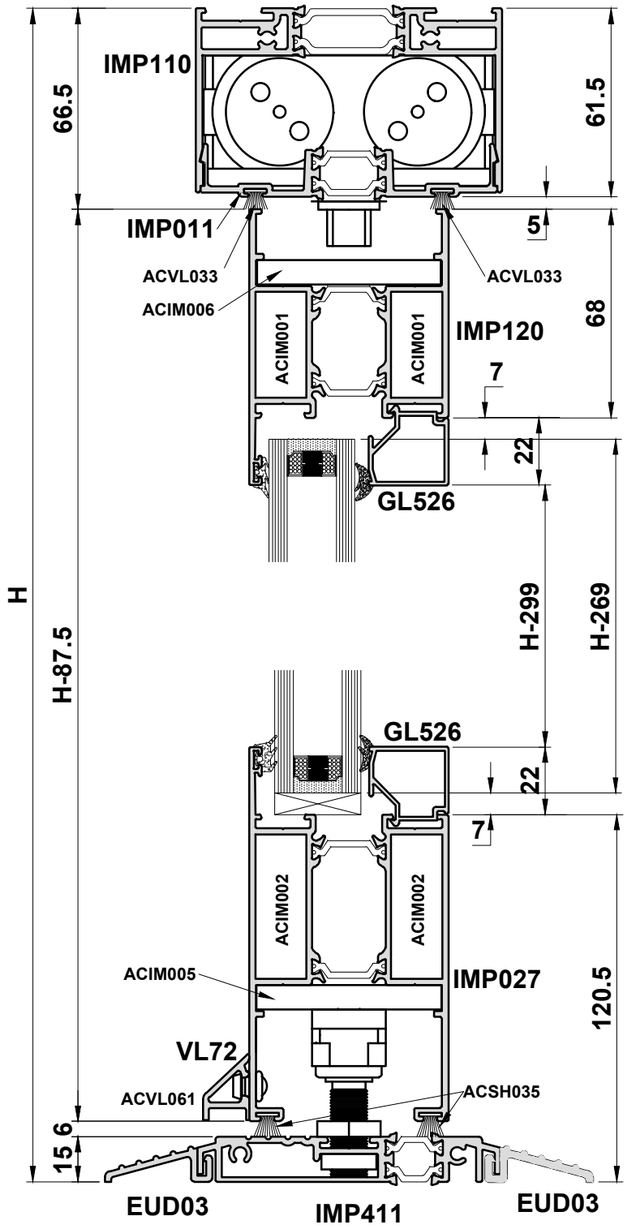

Profile Cutting Schedule

EUD03		2		W-106
IMP110		1		W-106
IMP011		1		W-706
IMP013		2		H
IMP027		2		W/2-208
IMP034		2		W/2-208
IMP035		2		H-76.5
IMP036N		2		H-92
IMP039		1		H-92
IMP040		1		H-92
IMP120		2		W/2-208
IMP210		2		H
IMP300		2		H-92
IMP411		1		W-106
PCX40		2		H-108
GL526		4		W/2-208
GL526		4		H-299
VG12		4		H-299
VL72		2		W/2-154

With IMP032/IMP034

IMP032/IMP034		2		W/2-208
GL526		4		W/2-208
GL526		4		IMP032 H1-185 / IMP034 H1-256.5
GL526		4		IMP032 H2-171 / IMP034 H2-242.5

Glass Size

Without Mid-rail	W/2-222	H-269
With IMP034 Mid-rail	W/2-222	H1-226.5
		H2-212.5
With IMP032 Mid-rail	W/2-222	H1-154.5
		H2-140.5

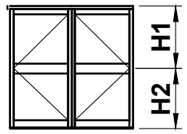

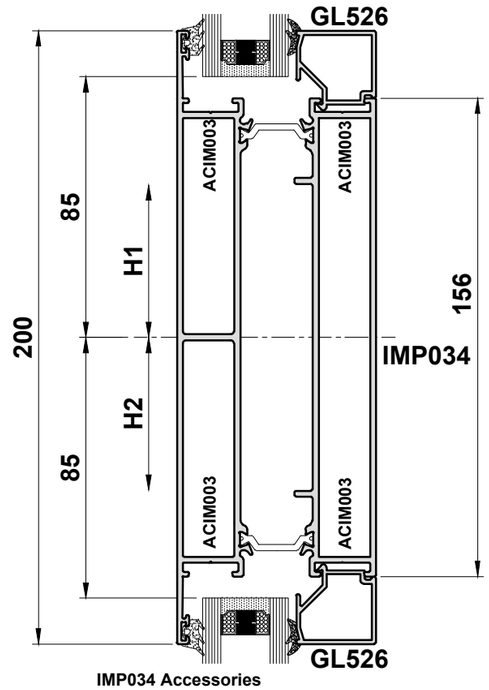

IMP034 Accessories

ACIM003	16	IMP034 Cleat

IMP032 Accessories

ACIM032	8	IMP032 Bracket

Accessories

ACDR052	8	Screws	
ACET064	300 ctrs	VG12 Bead Screw	
ACET190	300 ctrs + 5	Polyamide Screw	
ACIM001	8	IMP120 Cleat	
ACIM002	8	IMP027 Cleat	
ACIM004	4	Securing Block	
ACIM005	2	Floor Plate	
ACIM006	2	Closure Plate	
ACIM008	1	Keep	
ACIM009	2	AFT End Cover	
ACIM010	1	ML End Cover	
ACIM011	1	SL End Cover	
ACIM016	2	Shootbolt Packer	
ACIM018	2	Cover Plate	
ACIM021	4	AFT Foam Infill	
ACIM022	2	Lock fix bracket	
ACIM030	2	Fixing Rod/Nuts	For Pad Handles
ACIM057	8	Bridge Packer	
ACIM42*	2	Over head Closer	Various Sizes
ACIM440B	1	Lock	
ACIM442 Or ACIM445	1	Cylinder	No Thumb Turn
	1	Cylinder	With Thumb Turn
ACMX05520 Or ACMX05522	4	Pad Handles	100mm
	4	Pad Handles	200mm
ACMX108	2	Cover	
ACSH035	4	Wool-pile	W/2-144
ACSH035	2	Wool-pile	H-76
Ref' Glazing Table Page 99	4	External Gasket	H-296
Ref' Glazing Table Page 99	4	External Gasket	W-286
Ref' Glazing Table Page 99	4	Internal Gasket	H-296
Ref' Glazing Table Page 99	4	Internal Gasket	W-286
ACVL033	2	Wool-pile	W-106
ACVL033	4	Wool-pile	H-76
ACVL059	2	End Caps	5/Door
ACVL061	10	Rivets	
ACVL432	2	Shootbolt	

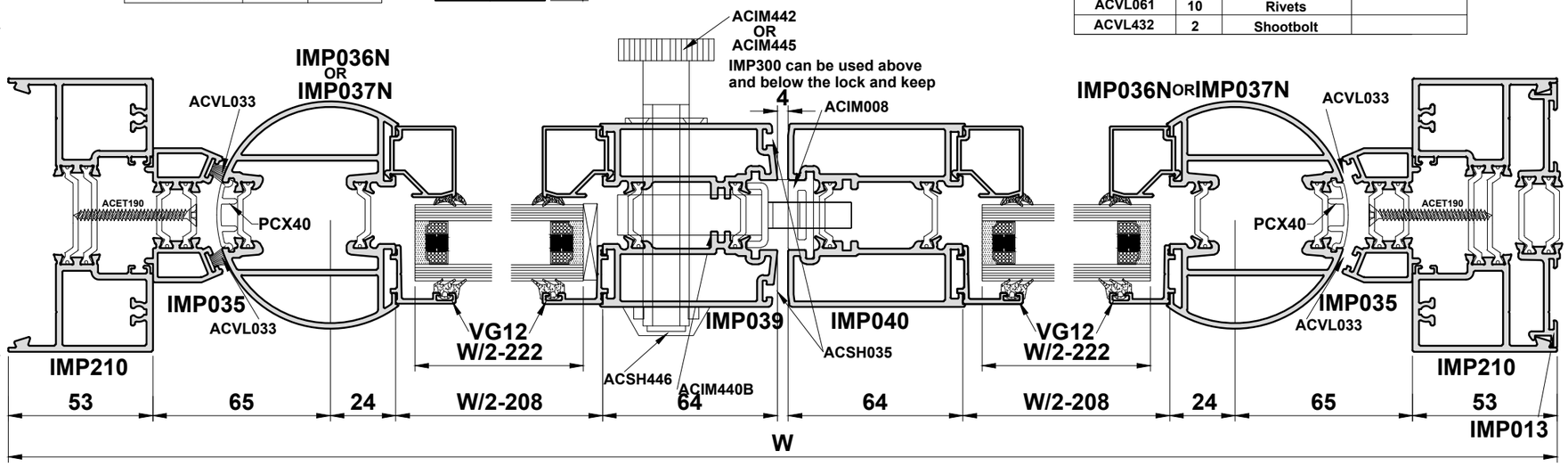

Do Not Scale From This Drawing

Single Auto Swing Door

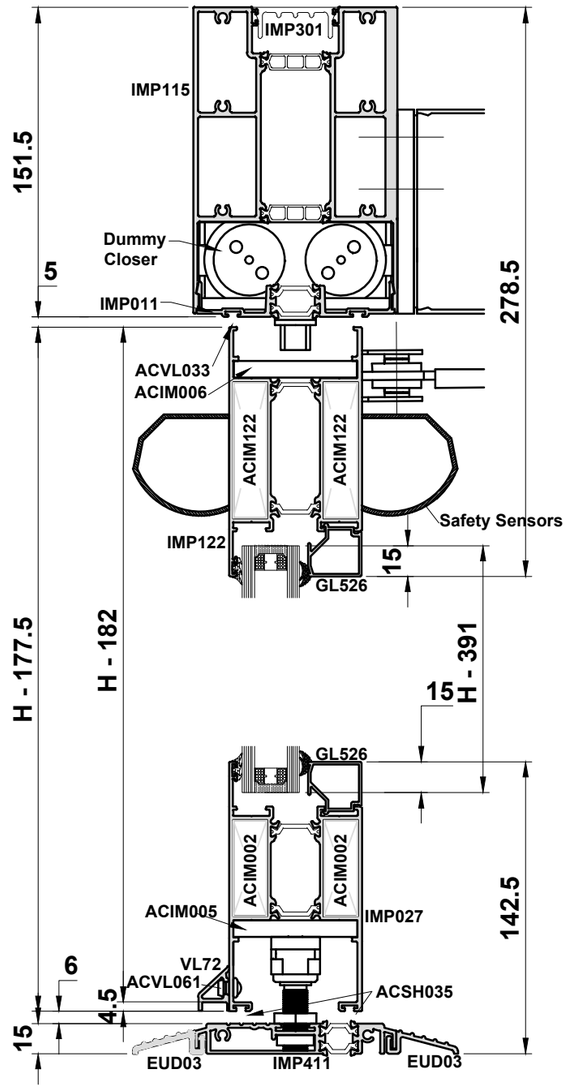

PROFILE CUTTING SCHEDULE

EUD03		2		W-106
IMP115		1		W-106
IMP011		1		W-406
IMP013		2		H
IMP027		1		W-263
IMP034		1		W-263
IMP035		1		H-166.5
IMP036N		1		H-182
IMP039		1		H-182
IMP122		1		W-263
IMP210		2		H
IMP300		1		H-166.5
IMP301		1		W-106
IMP301		1		H-166.5
IMP411		1		W-106
GL526		2		W-263
GL526		2		H-421
PCX40		1		H-198
VG12		2		H-421
VL72		1		W-201

The auto mechanism shown is based on:
Dorma unit ED200 Single.
Please contact:
DORMA UK Limited
Tel: 01462 477600
Fax: 01462 477601
Email: sales@dorma-uk.co.uk

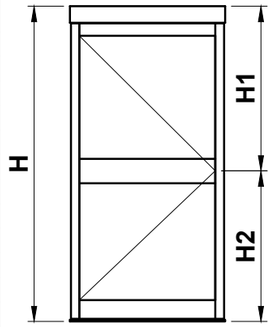

Glass Size

Without Mid-rail	W-277	H-391
With Mid-rail	W-277	H1-348.5
		H2-212.5
With IMP032 Mid-rail	W-277	H1276.5
		H2-140.5

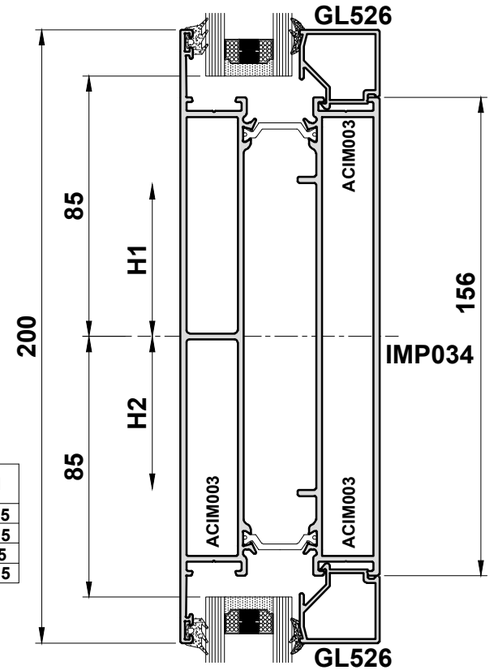

IMP034 Accessories

ACIM003	8	IMP034 Cleat

IMP032 Accessories

ACIM032	4	IMP032 Bracket

ACDR052	16	Screws	
ACET064	300 ctrs	VG12 Bead Screw	
ACET190	300 ctrs + 5	Polyamide Screw	
ACIM002	4	IMP027 Cleat	
ACIM004	2	Securing Block	
ACIM005	1	Floor Plate	
ACIM006	1	Closure Plate	
ACIM009	1	End Cover	
ACIM010	1	End Cover	
ACIM012	1	Keep	
ACIM018	1	Cover Plate	
ACIM021	2	AFT Foam Infill	
ACIM022	2	Lock Fix Bracket	
ACIM030	1	Fixing Rod/Nuts	For Pad Handle
ACIM057	4	Bridge Packer	
ACIM122	4	IMP122 Cleat	
ACIM426	1	Springless Closer	
ACIM440B	1	Lock	
ACIM442 Or	1	Cylinder	No Thumb Turn
ACIM445	1	Cylinder	With Thumb Turn
ACMX05520 Or	2	Pad Handles	100mm
ACMX05522	2	Pad Handles	200mm
ACMX108	2	Cover	
ACSH035	2	Wool-pile	W-242
ACSH035	2	Wool-pile	H-166
ACVL033	2	Wool-pile	W-106
ACVL033	2	Wool-pile	H-166
ACVL059	1 pr	End Cap	
ACVL061	5	Rivets	
Ref' Glazing Table Page 99	2	External Gasket	H-421
Ref' Glazing Table Page 99	2	External Gasket	W-307
Ref' Glazing Table Page 99	2	Internal Gasket	H-421
Ref' Glazing Table Page 99	2	Internal Gasket	W-307
WCA134	6	M5 x 20 CSK	

IMP300 can be used above and below the lock and keep

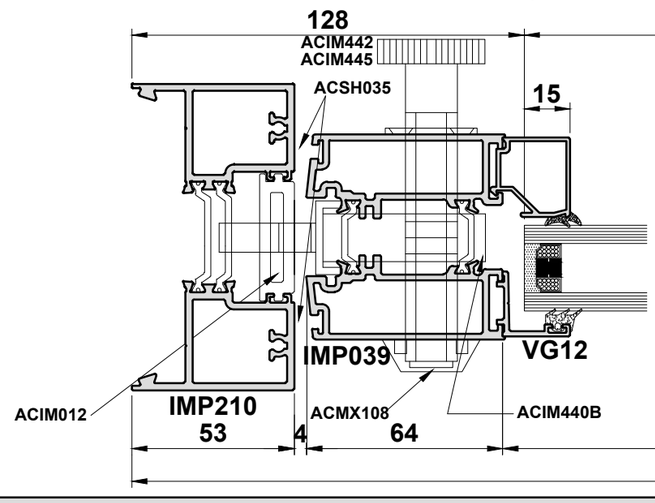

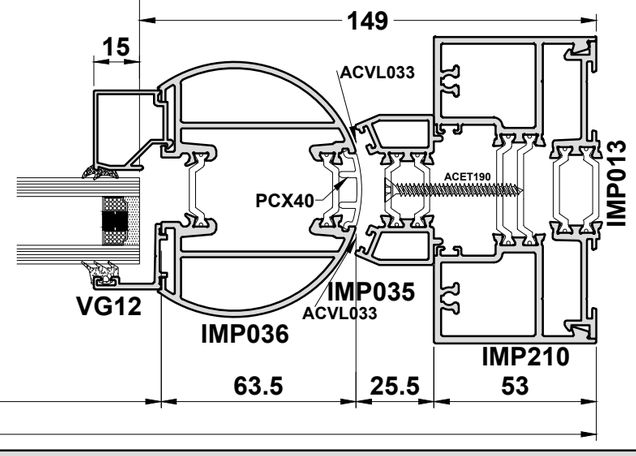

Do Not Scale From This Drawing

Double Auto Swing Door

The auto mechanism shown is based on:
Dorma unit ED200 Single.
Please contact:
DORMA UK Limited
Tel: 01462 477600
Fax: 01462 477601
Email: sales@dorma-uk.co.uk

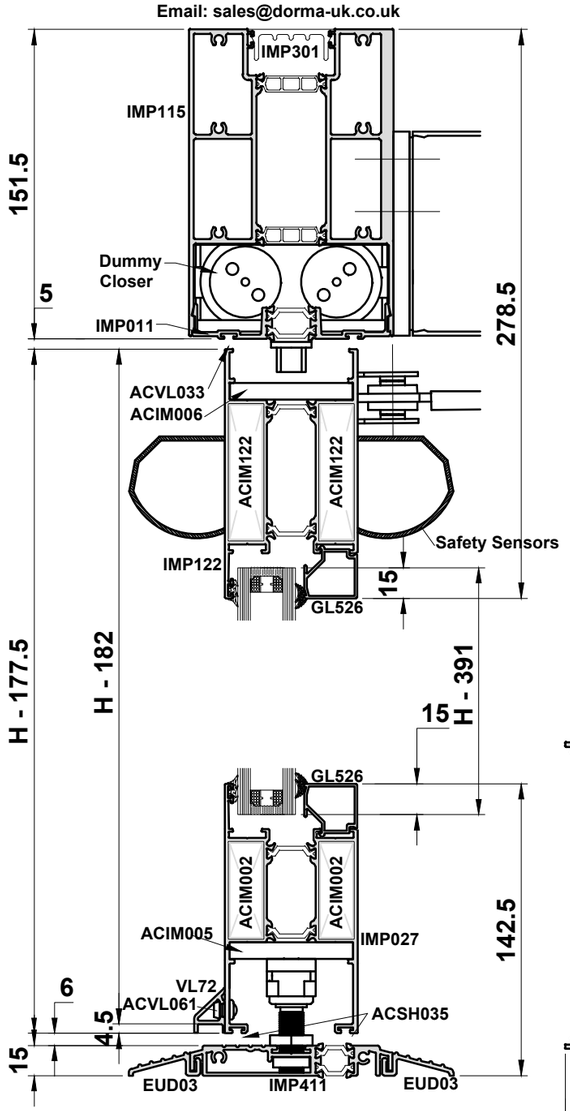

Profile Cutting Schedule

EUD03		2		W-106
IMP011		1		W-706
IMP013 (Optional)		2		H
IMP027		2		W/2-208
IMP034		2		W/2-208
IMP035		2		H-166.5
IMP036N		2		H-182
IMP039		1		H-182
IMP040		1		H-182
IMP115		1		W-106
IMP122		2		W/2-208
IMP210		2		H
IMP300		2		H-92
IMP301		1		W-106
IMP411		1		W-106
GL526		4		W/2-208
GL526		4		H-421
PCX40		2		H-198
VG12		4		H-421
VL72		2		W/2-154

Glass Size

Without Mid-rail	W/2-222	H-391
With IMP034 Mid-rail	W/2-222	H1-348.5 H2-212.5
With IMP032 Mid-rail	W/2-222	H1276.5 H2-140.5

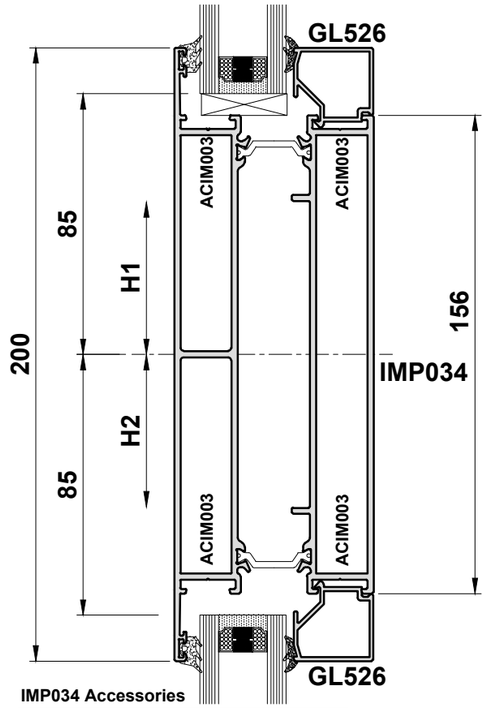

IMP034 Accessories

ACIM003	16	IMP034 Cleat

IMP032 Accessories

ACIM032	8	IMP032 Bracket

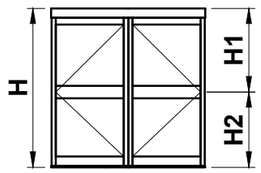

Accessories

ACDR052	16	Screws	
ACET064	300 ctrs	VG12 Bead Screw	
ACET190	300 ctrs + 5	Polyamide Screw	
ACIM002	8	IMP027 Cleat	
ACIM004	4	Securing Block	
ACIM005	2	Floor Plate	
ACIM006	2	Closure Plate	
ACIM008	1	Keep	
ACIM009	2	AFT End Cover	
ACIM010	1	ML End Cover	
ACIM011	1	SL End Cover	
ACIM016	2	Shootbolt Packer	
ACIM018	2	Cover Plate	
ACIM021	4	AFT Foam Infill	
ACIM022	2	Lock Fixing Brkt	
ACIM030	2	Fixing Rod/Nuts	For Pad Handles
ACIM057	8	Bridge Packer	
ACIM122	8	IMP122 Cleat	
ACIM426	2	Springless Closer	
ACIM440B	1	Lock	No Thumb Turn
ACIM442 Or ACIM445	1 1	Cylinder Cylinder	With Thumb Turn
ACMX05520 Or ACMX05522	4 4	Pad Handles Pad Handles	100mm 200mm
ACMX108	2	Cover	
ACSH035	4	Wool-pile	W/2-144
ACSH035	6	Wool-pile	H-166
ACVL033	2	Wool-pile	W/2-106
ACVL033	4	Wool-pile	H-166
Ref Glazing Table Page 99	4	External Gasket	H-421
Ref Glazing Table Page 99	4	External Gasket	W/2-252
Ref Glazing Table Page 99	4	Internal Gasket	H-421
Ref Glazing Table Page 99	4	Internal Gasket	W/2-252
ACVL059	2	End Caps	
ACVL061	10	Rivets	
ACVL432	2	Shootbolt	
WCA134	12	M5 x 20 CSK	

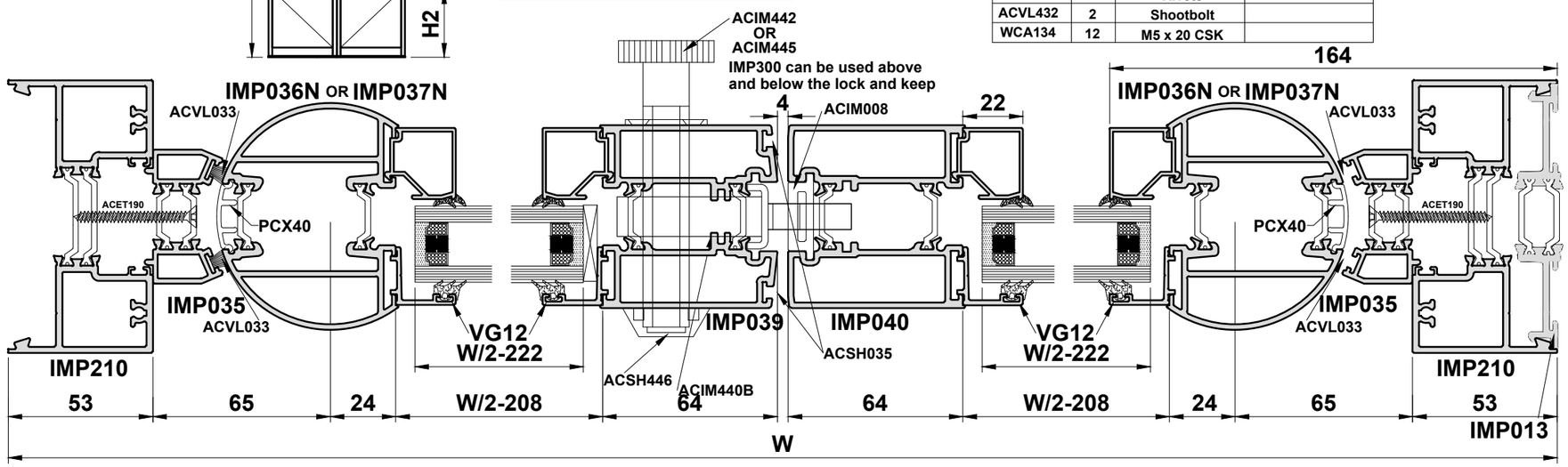

Do Not Scale From This Drawing

Single Auto Slide Door

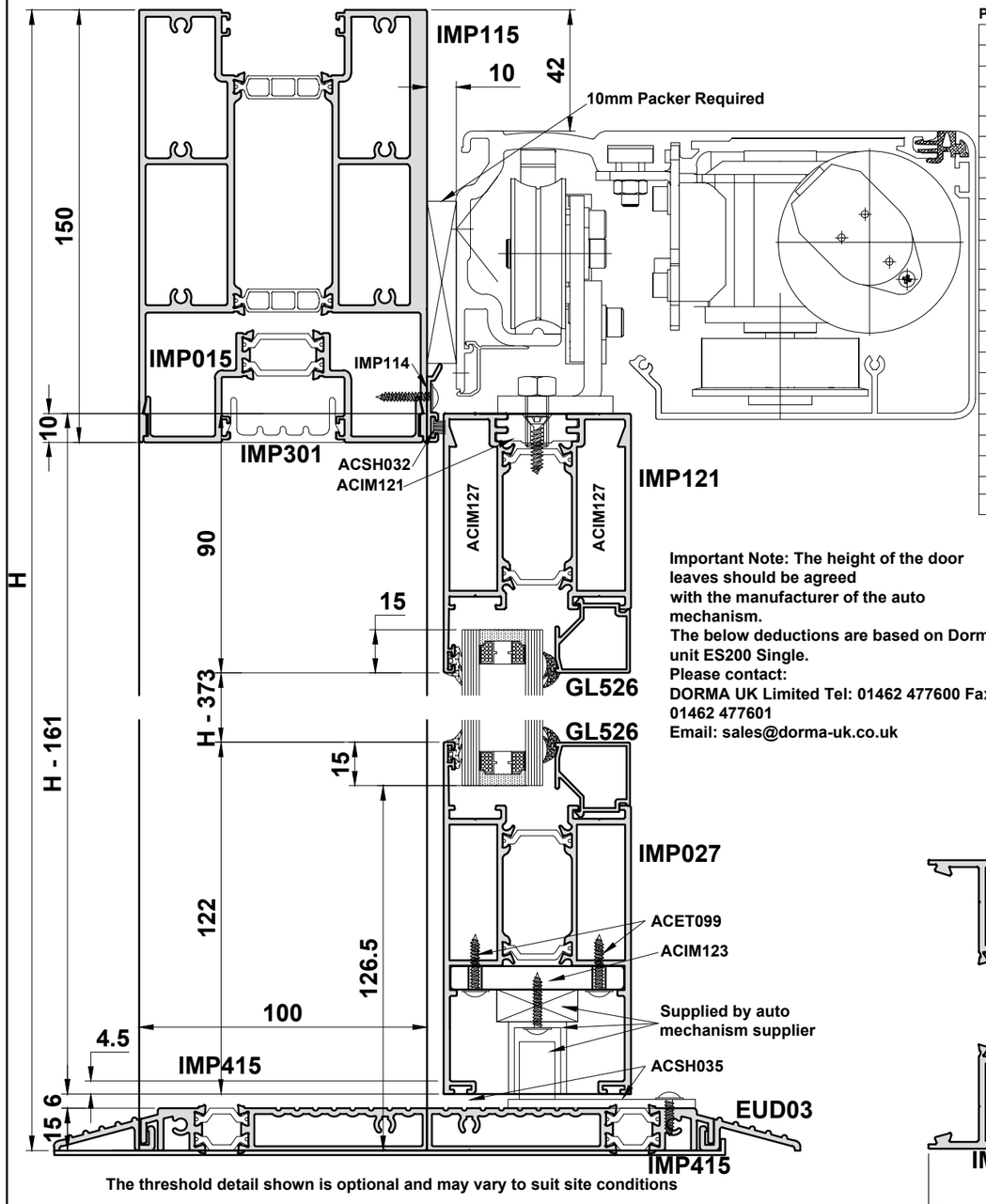

The threshold detail shown is optional and may vary to suit site conditions

* for PAS24 replace guide with UTL032 & UTL072

Important Note: The height of the door leaves should be agreed with the manufacturer of the auto mechanism.
The below deductions are based on Dorma unit ES200 Single.
Please contact:
DORMA UK Limited Tel: 01462 477600 Fax: 01462 477601
Email: sales@dorma-uk.co.uk

Profile Cutting Schedule

EUD03		1		W2-79.5
EUD03		1		W-53
IMP013 (Optional)		3		H
IMP015		2		W1-79.5 W2-79.5
IMP016		1		H
IMP027		1		W2-158.5
IMP039		1		H-165.5
IMP040		1		H-165.5
IMP114		2		H-161
IMP114		1		W2-53
IMP115		2		W1-79.5 W2-79.5
IMP121		1		W2-158.5
IMP210		4		H
IMP219		1		W1-79.5
IMP300		1		H-161
IMP301		3		H-166
IMP301		1		W-79.5
IMP415		1		W2-79.5
IMP415		1		W-53
IMP614		1		W1-79.5
GL526		2		W2-158.5
GL526		2		H-373
VG12		2		H-373

Door Glass Size

Without Mid-rail	W2-172.5	H-343
With Mid-rail	W2-172.5	H1-300 H2-213

Screen Glass Size

Without Mid-rail	W1-63.5	H-185
With IMP030	W1-63.5	H1-156.5 H2-59.5

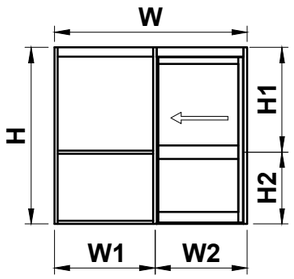

ACDR052	26	Screws for Screen	
ACDV205	2	Woolpile	H-159.5
ACET064	*	Screws for VG12	*To be fitted at 600mm centres & 150mm in from each end
ACET099	*	Screws for IMP114 & ACIM123	*To be fitted at 600mm centres & 150mm in from each end
ACET290	6	Polyamide Screw	
ACIM002	4	IMP027 Cleat	
ACIM010	1	IMP039 End Cap	
ACIM011	1	IMP040 End Cap	
ACIM057	4	Bridge Packer	
ACIM112	1	Keep	
ACIM121	3	Bracket for Auto Mechanism	
ACIM123	6*	Bracket for Bottom Guide	*To be fitted at 600mm centres
ACIM127	4	IMP121 Cleat	
ACIM272	1	Auto Slider Brackets	
ACIM440C	1	Hook Lock	
ACIM442 or	1	Cylinder	No Thumb Turn
ACIM445	1	Cylinder	With Thumb Turn
ACMX108	2	Cover	
ACSH032	1	Woolpile	W2-53
ACSH035	2	Wool-pile	W2-30.5
ACSH035	2	Wool-pile	H-165.5
ACSH037	2	Wool-pile	W-106
Ref Glazing Table Page 99	2	Screen Gasket	H-203
Ref Glazing Table Page 99	2	Screen Gasket	W1-79.5
Ref Glazing Table Page 99	2	Door Gasket	H-373
Ref Glazing Table Page 99	2	Door Gasket	W2-202.5

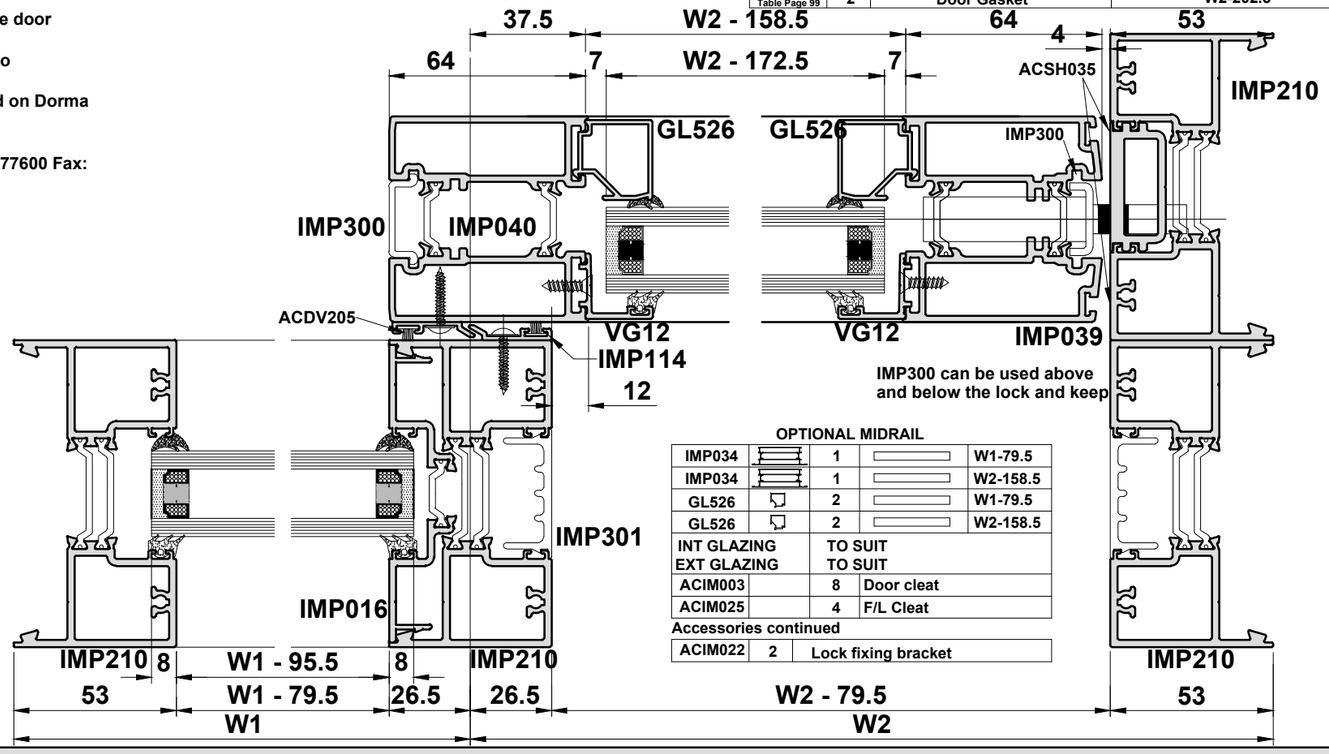

OPTIONAL MIDRAIL

IMP034	1		W1-79.5
IMP034	1		W2-158.5
GL526	2		W1-79.5
GL526	2		W2-158.5
INT GLAZING EXT GLAZING		TO SUIT TO SUIT	
ACIM003		8	Door cleat
ACIM025		4	F/L Cleat

Accessories continued

ACIM022	2	Lock fixing bracket

Do Not Scale From This Drawing

Bi-Parting Auto Door

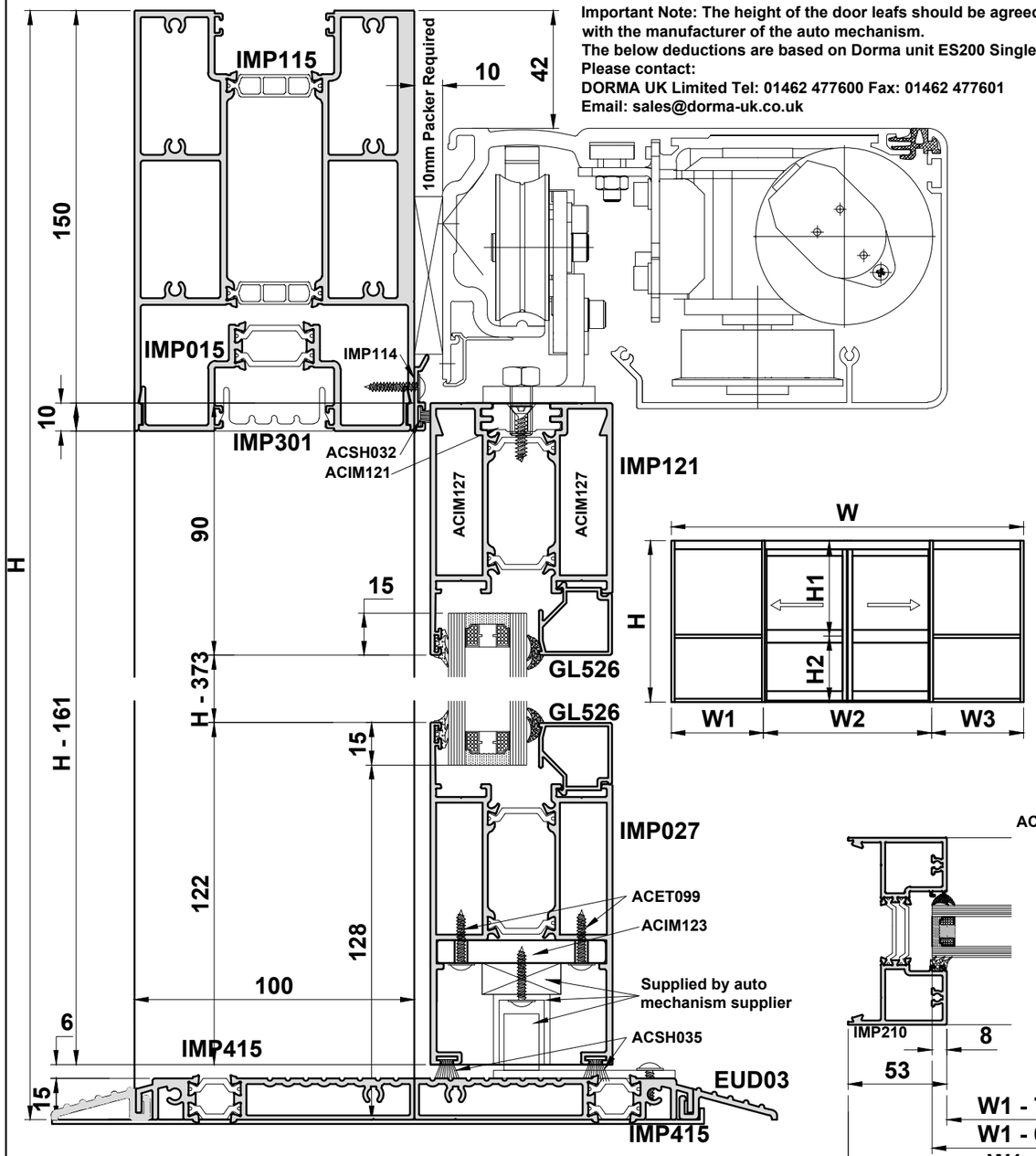

Important Note: The height of the door leafs should be agreed with the manufacturer of the auto mechanism.
The below deductions are based on Dorma unit ES200 Single.
Please contact:
DORMA UK Limited Tel: 01462 477600 Fax: 01462 477601
Email: sales@dorma-uk.co.uk

The threshold detail shown is optional and may vary to suit site conditions

Profile Cutting Schedule

EUD03	1		W2-53
EUD03	1		W
IMP013 (Optional)	2		H
IMP015	2		W1-79.5 W3-79.5
IMP016	2		H
IMP027	2		W2/2-103.5
IMP034	2		W2/2-103.5
IMP039	1		H-165.5
IMP040	3		H-165.5
IMP114	4		H-161
IMP114	1		W2
IMP115	2		W1-79.5 W3-79.5
IMP115	1		W2-53
IMP121	2		W2/2-103.5
IMP210	4		H
IMP219	1		W1-79.5 W3-79.5
IMP300	2		H-161
IMP301	2		H-166
IMP301	1		W2-53
IMP415	1		W2-53
IMP415	1		W
IMP614	1 1		W1-79.5 W3-79.5
GL526	4		W2/2-103.5
GL526	4		H-373
VG12	4		H-373

Door Glass Size

Without Mid-rail	W2/2-117.5	H-343
With Mid-rail	W2/2-117.5	H1-300 H2-213

W1 Screen Glass Size

Without Mid-rail	W1-63.5	H-185
With IMP030	W1-63.5	H1-160.5 H2-79.5

W3 Screen Glass Size

Without Mid-rail	W3-63.5	H-185
With IMP030	W3-63.5	H1-160.5 H2-79.5

Accessories

ACDR052	32	Screws for Screen	
ACDV205	4	Woolpile	H-159.5
ACDV205	1	Woolpile	W2
ACET064	*	Screws for VG12	
ACET099	*	Screws for IMP114 & ACIM123	*To be fitted at 600mm centres & 150mm in from each end
ACET290	12	Polyamide Screw	
ACIM002	16	IMP027 Cleat	
ACIM008	1	Keep	
ACIM010	1	IMP039 End Cap	
ACIM011	3	IMP040 End Cap	
ACIM022	2	Lock fixing bracket	
ACIM057	8	Bridge Packer	
ACIM121	6	Bracket for Auto Mechanism	
ACIM123	6*	Bracket for Bottom Guide	*To be fitted at 600mm centres
ACIM127	8	IMP121 Cleat	
ACIM271	1	Auto Slide Brackets	
ACIM440C	1	Hook Lock	
ACIM442	1	Cylinder	No Thumb Turn
or ACIM445	1	Cylinder	With Thumb Turn
ACMX108	2	Cover	
ACSH035	4	Wool-pile	W2/2+26.5
ACSH035	2	Wool-pile	H-166
Ref' Glazing Table Page 99	4	External Gasket	H-296
Ref' Glazing Table Page 99	4	External Gasket	W1-63.5 & W3-63.5
Ref' Glazing Table Page 99	4	Internal Gasket	H-296
Ref' Glazing Table Page 99	4	Internal Gasket	W2/2-104

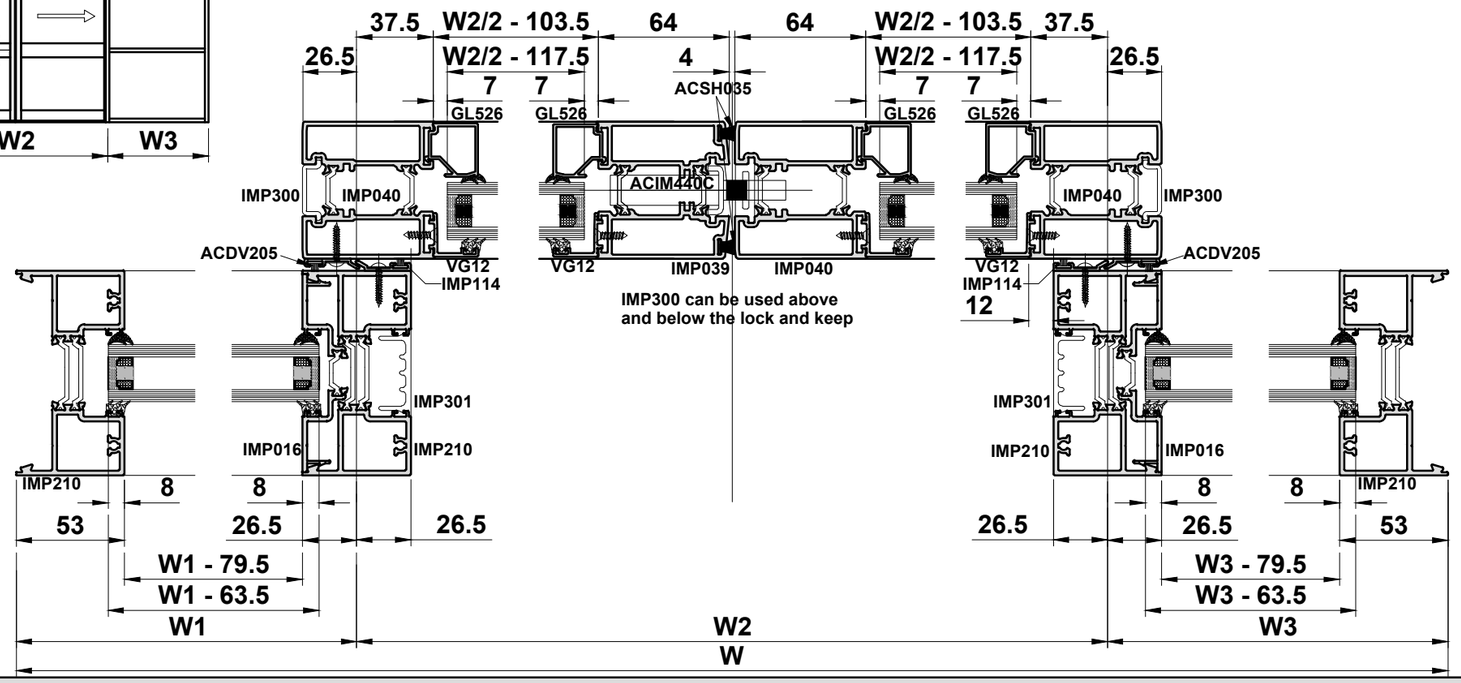

Do Not Scale From This Drawing

Single Rebated Hinged Door

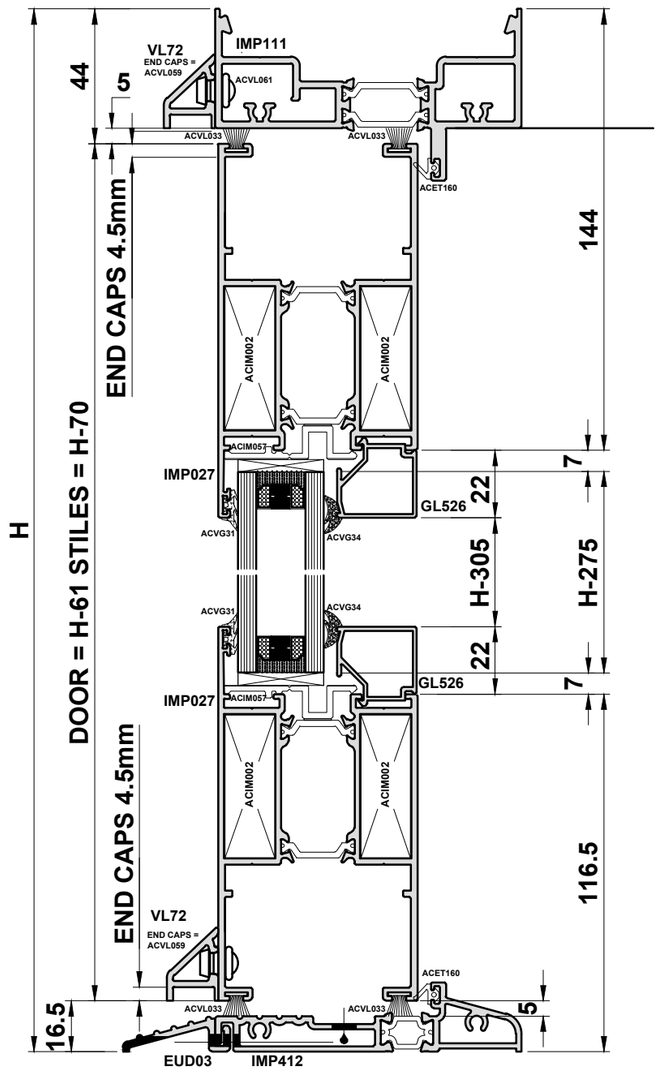

Profile Cutting Schedule

IMP111		1		W-78
IMP111		2		H
IMP412		1		W-78
IMP027		2		W-214
IMP039		2		H-70
IMP300		2		H-61
EUD03		1		W-78
VG12		2		H-305
GL526		2		H-305
GL526		2		W-214
VL72		1		W-102

Glass Size

Without Mid-rail	W-228	H-274.5

Accessories

ACIM002	8	IMP027 Cleat	
ACIM010	4	End Cover	
ACIM030	1	Fixing Rod/Nuts	For Pad Handles
ACIM057	4	Bridge Packer	
ACIM440B	1	Lock	
ACIM442 Or ACIM445	1	Cylinder	No Thumb Turn
	1	Cylinder	With Thumb Turn
ACMX05520 Or ACMX05522	2	Pad Handles	100mm
	2	Pad Handles	200mm
ACMX108	2	Cylinder Cover	
ACET160	2	Gasket	H-64
ACET160	2	Gasket	W-98
ACSH035	4	Wool-pile	H-70
ACSH035	4	Wool-pile	W-78
Ref' Glazing Table Page 99	2	External Gasket	W-200
Ref' Glazing Table Page 99	2	External Gasket	W-200
Ref' Glazing Table Page 99	2	Internal Gasket	H-290
Ref' Glazing Table Page 99	2	Internal Gasket	H-290
ACVL059	2	End Caps	
ACVL061	300 ctrs	Rivets	5/Door (W/300)
PUA028	4	Screws	
ACDR052	4	Screws	
ACIM429 Or ACIM430	2	Two Part Hinge	
	2	Three Part Hinge	
ACIM428	1	Face Mounted Closer	

MIDRAIL

IMP034		1		W-214
GL526		2		W-214
GL526		2		H1-266
GL526		2		H2-239
Ref' Glazing Table Page 99	4	External Gasket		W-200
Ref' Glazing Table Page 99	4	Internal Gasket		W-200
ACIM003	8	Cleat		

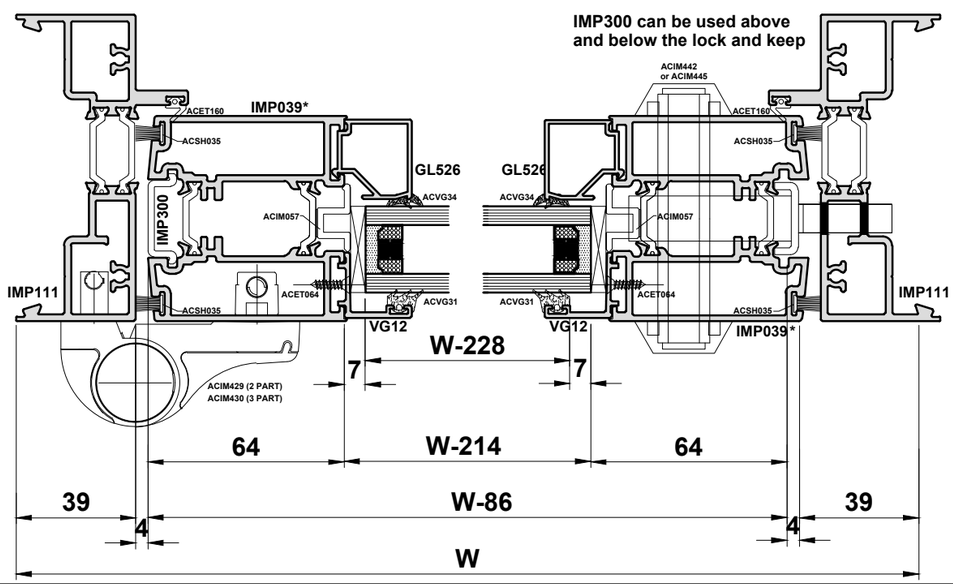

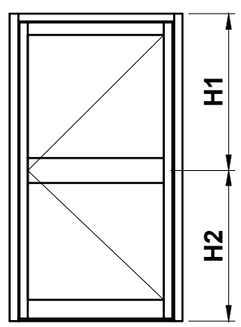

Do Not Scale From This Drawing

Double Rebated Hinged Door

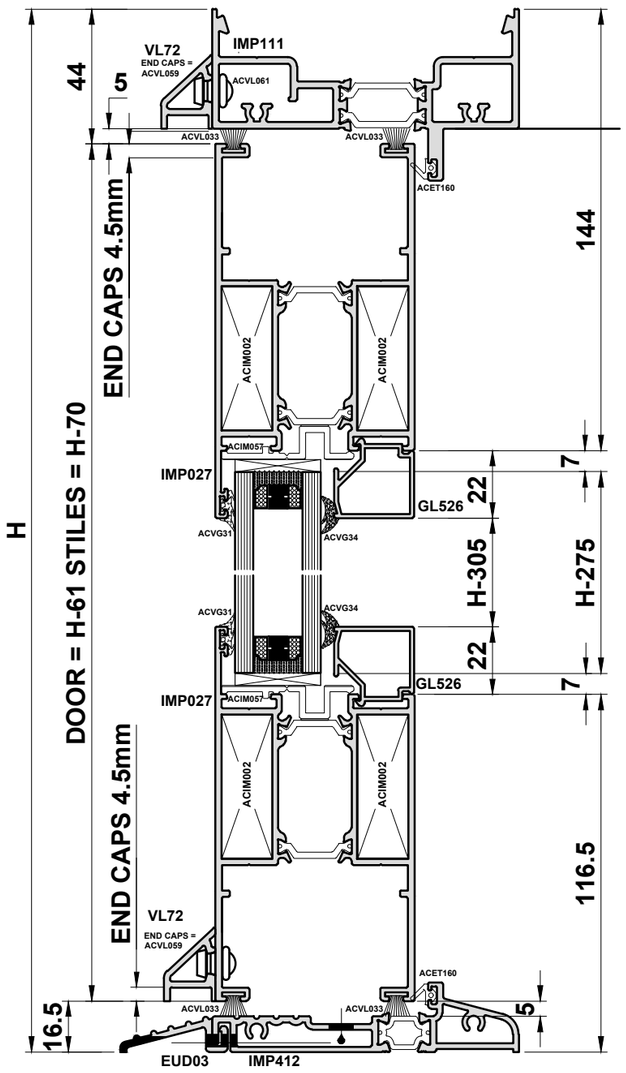

Profile Cutting Schedule

EUD03		1		W-78
IMP027		4		W/2-173.5
IMP038		2		H-70
IMP039		2		H-70
IMP111		1		W-78
IMP111		2		H
IMP412		1		W-78
IMP300		4		H-61
GL526		4		H-305
GL526		4		W/2-173.5
VG12		4		H-305
VL72		2		W/2-56

Glass Size

Without Mid-rail	W/2-187.5	H-274.5
With IMP034 Mid-rail	W/2-187.5	H1-236
		H2-209

Accessories

ACIM002	16	IMP027 Cleat	
ACIM008	1	Keep	
ACIM010	4	ML End Cover	
ACIM016	2	Shootbolt Packer	
ACIM030	2	Fixing Rod/Nuts	For Pad Handles
ACIM038	4	IMP038 End Caps	
ACIM057	8	Bridge Packer	
ACIM440B	1	Lock	
ACIM442 Or	1	Cylinder	No Thumb Turn
ACIM445	1	Cylinder	With Thumb Turn
ACMX05520 Or	4	Pad Handles	100mm
ACMX05522	4	Pad Handles	200mm
ACMX108	2	Cylinder Cover	
ACET160	2	Gasket	H-64
ACET160	2	Gasket	W-98
ACSH035	6	Wool-pile	H-70
ACSH035	8	Wool-pile	W/2-45
Ref' Glazing Table Page 99	4	External Gasket	H-290
Ref' Glazing Table Page 99	4	External Gasket	W-200
Ref' Glazing Table Page 99	4	Internal Gasket	H-290
Ref' Glazing Table Page 99	4	Internal Gasket	W-200
ACVL059	2	End Caps	
ACVL061	10	Rivets	5/Door (W/300)
PUA028	4	Screws	
ACDR052	4	Screws	
ACVL432	2	Shootbolt	
ACIM429 Or	4	Two Part Hinge	
ACIM430	4	Three Part Hinge	
ACIM428	2	Face Mounted Closer	

MIDRAIL

IMP034		2		W/2-186
GL526		4		W/2-186
GL526		4		H1-266
GL526		4		H2-239
Ref' Glazing Table Page 99	8	External Gasket		W-200
Ref' Glazing Table Page 99	8	Internal Gasket		W-200
ACIM003	16	Cleat		

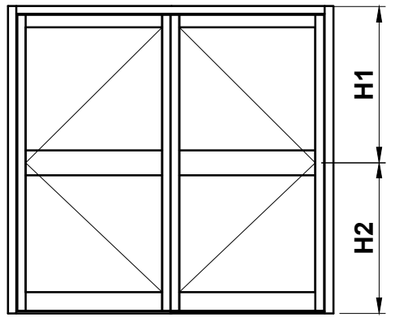

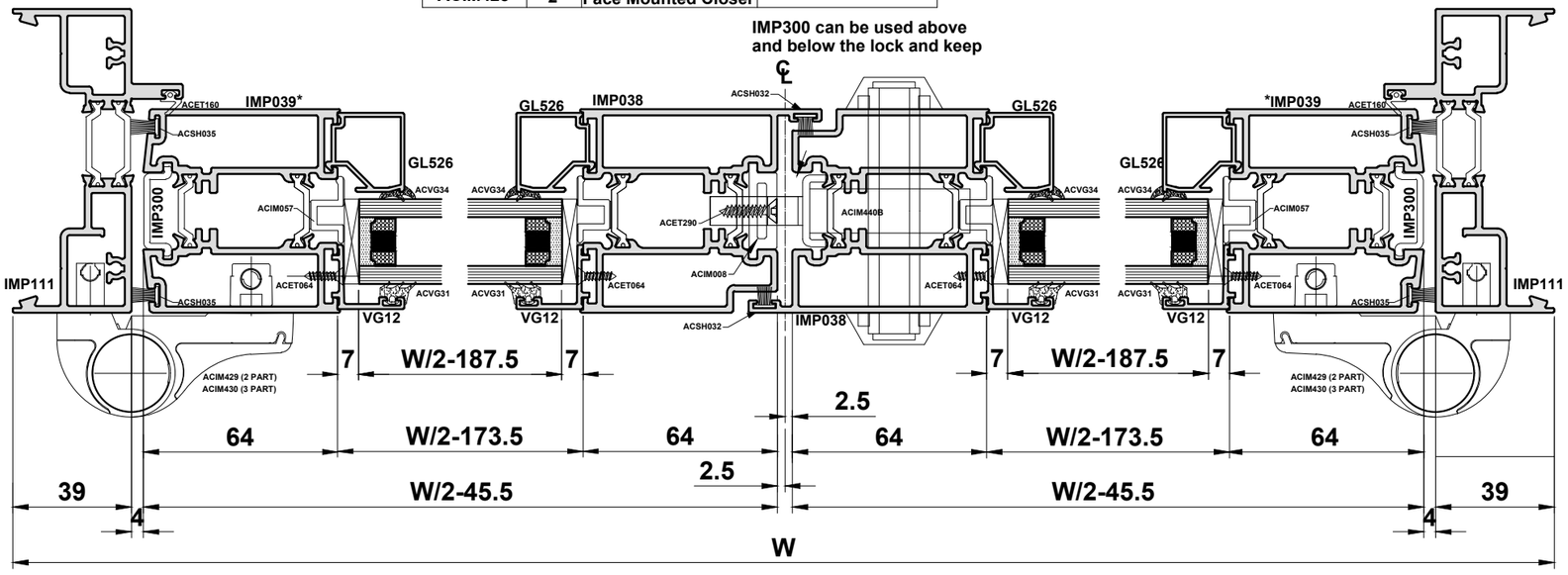

Do Not Scale From This Drawing

Single Rebated Anti-Finger Trap Door

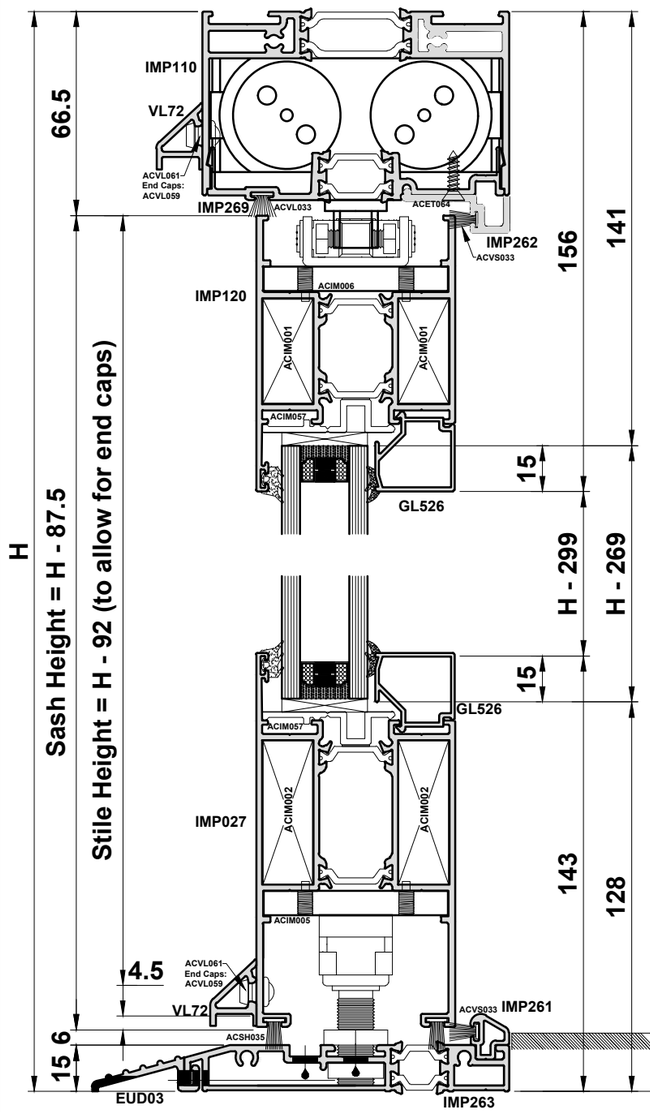

PROFILE CUTTING SCHEDULE

EUD03		1		W-83
IMP110		1		W-80
IMP013 (Optional)		2		H
IMP027		1		W-239.5
IMP034		1		W-239.5
IMP036N		1		H-92
IMP039		1		H-92
IMP120		1		W-239.5
IMP216		2		H
IMP260		1		H-77
IMP261		1		W-188
IMP262		1		W-188
IMP263		1		W-83
IMP265		1		H-77
IMP269		1		W-380
IMP300		1		H-92
GL526		2		W-263
GL526		2		H-299
PCX40		1		H-108
VG12		2		H-299
VL72		1		W-118
VL72		1		W-10

Glass Size

Without Mid-rail	W-252.5	H-269
With Mid-rail	W-252.5	H1-226
		H2-213

ACCESSORIES

ACDR052	8	Screws
ACET062	Every 300mm	Screws
ACET064	Every 300mm	Screws
ACET101	2	Screws (ACIM140)
ACET122	2	Screws (ACIM140)
ACET190	4	Polyamide Screw
ACIM001	4	IMP120 Cleat
ACIM002	4	IMP027 Cleat
ACIM004	2	Securing Block
ACIM005	1	Floor Plate
ACIM006	1	Closure Plate
ACIM009	1	IMP036N End Cap
ACIM010	1	IMP039 End Cap
ACIM021	2	AFT Foam Infill
ACIM022	1	Lock Fixing
ACIM030	1	Fixing Rod/Nuts
ACIM057	4	Bridge Packer
ACIM140	2	AFT Casting
ACIM210	2	Fixing Plate
ACIM212L/R	1	Keep
ACIM263	1 Pair	Threshold End Caps
ACIM269 (L/R)	1	Closer Cover Plate

ACIM42*	1	Over head Closer
ACIM440B	1	Lock
ACIM442 Or ACIM445	1	Cylinder
	1	Cylinder
ACMX05520 Or ACMX05522	2	Pad Handles
	2	Pad Handles
ACMX108	2	Cover
ACSH035	1x(W-137)	IMP261 Wool-pile
ACVL059	2 pr	End Cap
ACVL033	3x(W-110) + 2x(H-77)	Wool-pile
ACVL061	Every 300mm	Rivets
ACVS033	2x(W-145) + 2x(H-92)	Wool-pile
Ref Glazing Table Page 99	2x(W-283) + 2x(H-298)	External Gasket
Ref Glazing Table Page 99	2x(W-283) + 2x(H-298)	Internal Gasket

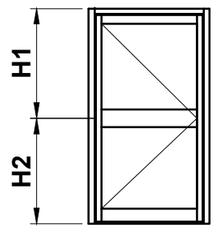

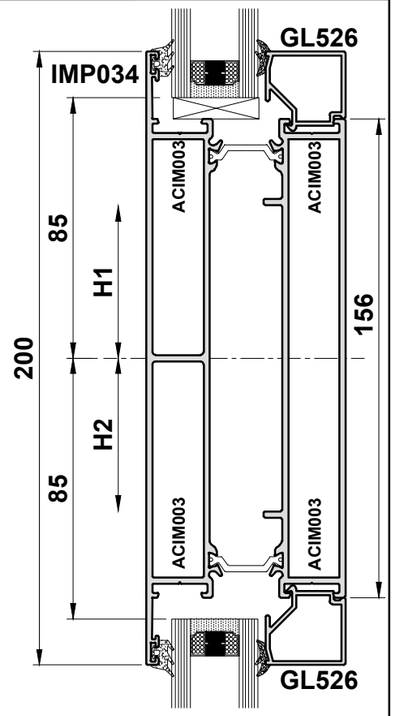

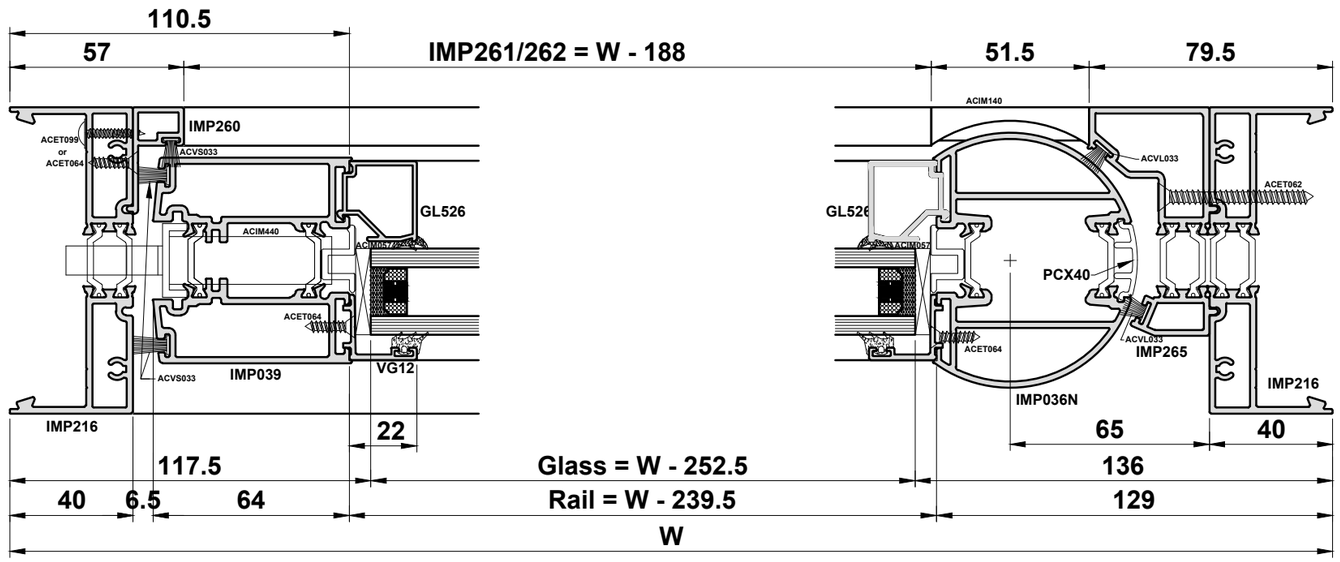

Do Not Scale From This Drawing

Double Rebated Anti-Finger Trap Door

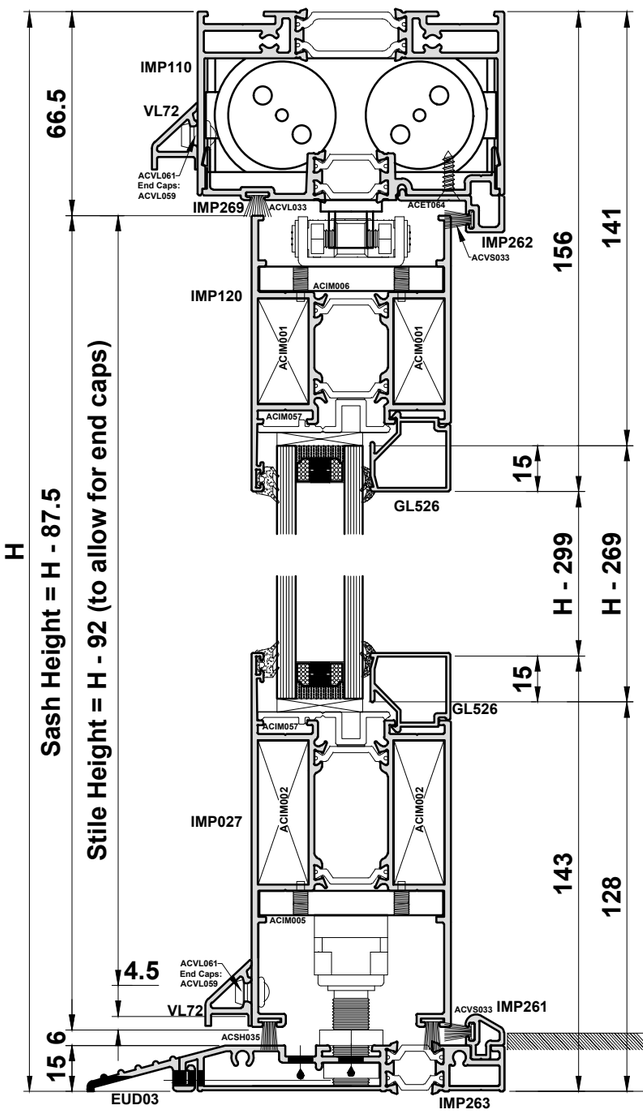

PROFILE CUTTING SCHEDULE

EUD03		1		W-83
IMP110		1		W-80
IMP013 (Optional)		2		H
IMP027		2		W/2-195.5
IMP034		2		W/2-195.5
IMP036N		2		H-92
IMP038		2		H-92
IMP120		2		W/2-195.5
IMP216		2		H
IMP261		1		W-262
IMP262		1		W-262
IMP263		1		W-83
IMP265		2		H-77
IMP269		1		W-680
IMP300		2		H-92
GL526		4		W/2-197.5
GL526		4		H-299
PCX40		1		H-108
VG12		2		H-299
VL72		1		W/2-156
VL72		1		W/2-127
VL72		1		W-10

Glass Size

Without Mid-rail	W/2-209.5	H-269
With Mid-rail	W/2-209.5	H1-226
		H2-213

ACCESSORIES

ACDR052	8	Screws
ACET062	Every 300mm	Screws
ACET064	Every 300mm	Screws
ACET101	4	Screws (ACIM140)
ACET122	4	Screws (ACIM140)
ACET190	1	Polyamide Screw
ACIM001	8	IMP120 Cleat
ACIM002	8	IMP027 Cleat
ACIM004	4	Securing Block
ACIM005	2	Floor Plate
ACIM006	2	Closure Plate
ACIM008	1	Keep
ACIM009	2	IMP036N End Cap
ACIM016	2	Packer for Shootbolts
ACIM021	4	AFT Foam Infill
ACIM022	1	Lock Fixing
ACIM030	2	Fixing Rod/Nuts
ACIM038	2	IMP038 End Caps
ACIM057	8	Bridge Packer
ACIM140	4	AFT Casting
ACIM210	4	Fixing Plate
ACIM263	1 Pair	Threshold End Caps

ACIM269 (L/R)	1 Left & 1 Right	Closer Cover Plate
ACIM42*	2	Over head Closer
ACIM440B	1	Lock
ACIM442 Or	1	Cylinder
ACIM445	1	Cylinder
ACMX05520 Or	4	Pad Handles
ACMX05522	4	Pad Handles
ACMX108	2	Cover
ACSH035	1x(W-137)	IMP261 Wool-pile
ACVL059	2 pr	End Cap
ACVL033	3x(W-110) + 2x(H-77)	Wool-pile
ACVL061	Every 300mm	Rivets
ACVS033	2x(W-145) + 2x(H-92)	Wool-pile
Ref' Glazing Table Page 99	2x(W-283) + 2x(H-298)	External Gasket
Ref' Glazing Table Page 99	2x(W-283) + 2x(H-298)	Internal Gasket

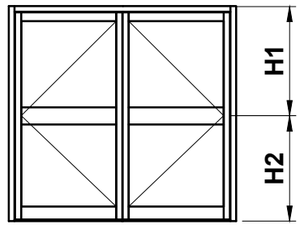

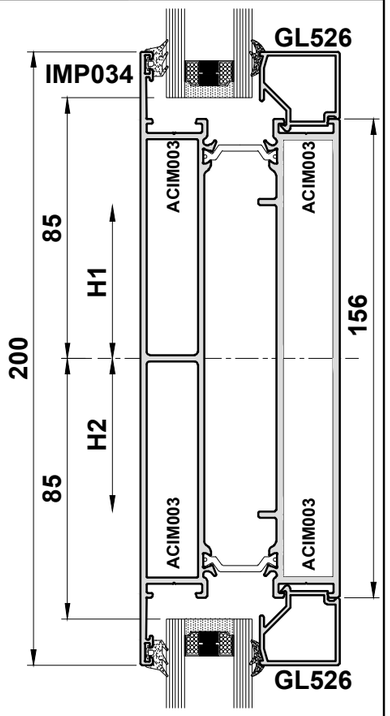

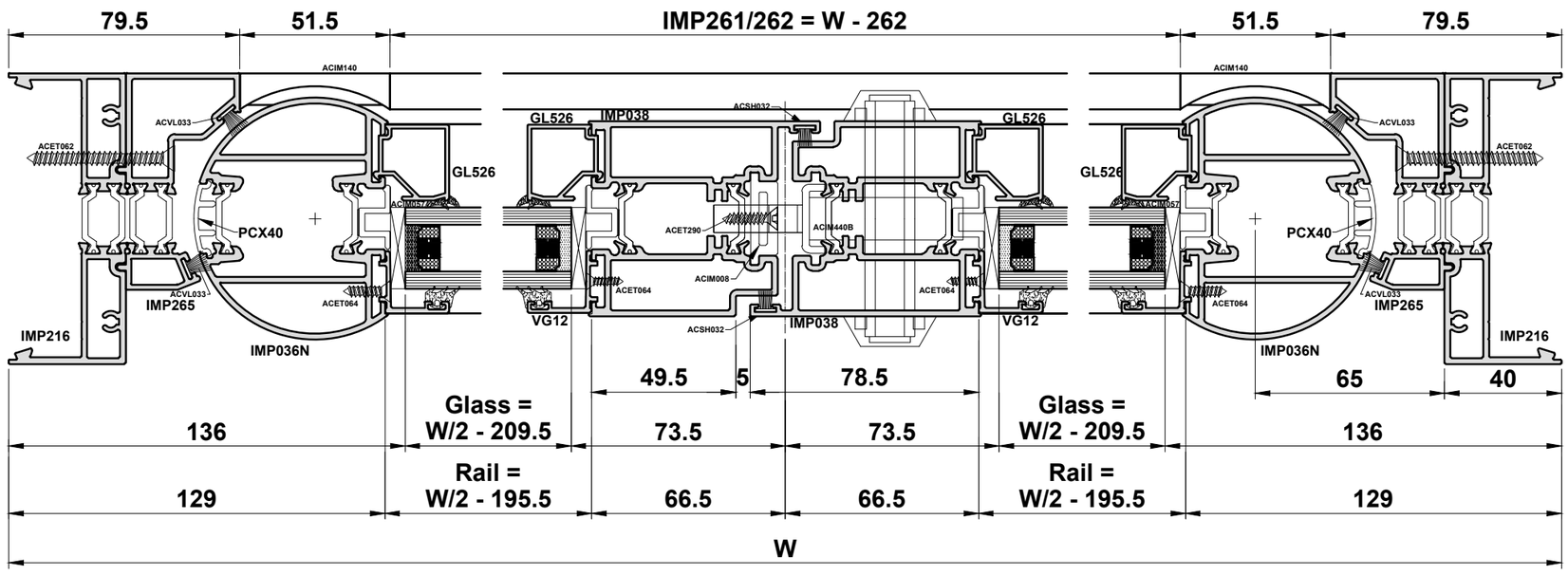

Do Not Scale From This Drawing

Single Door Autoslide PAS24:2016

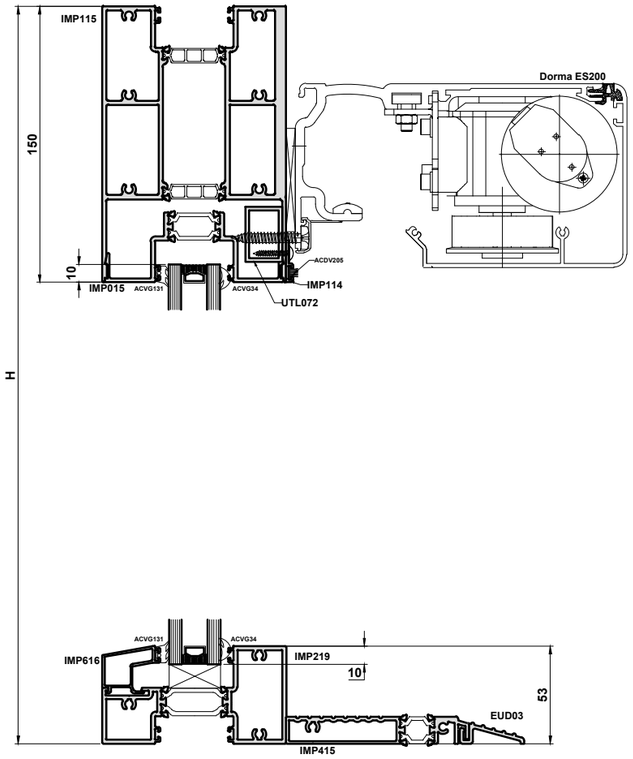

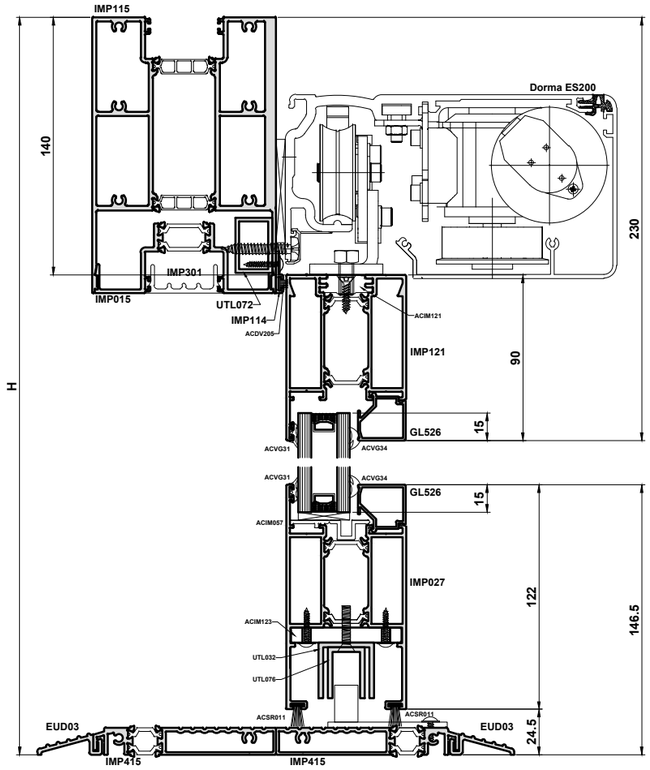

EUD03		1		W - 53
EUD03		1		W2 - 79.5
IMP415		1		W - 53
IMP415		1		W2 - 79.5
IMP210		4		H
IMP013		3		H
IMP016		1		H
IMP115		1		W1 - 79.5
IMP115		1		W2 - 79.5
IMP219		1		W1 - 79.5
IMP015		1		W1 - 79.5
IMP015		1		W2 - 79.5
IMP301		3		H
IMP301		1		W2 - 79.5
IMP040		1		H - 169
IMP043		1		H - 169
IMP121		1		W2 - 158.5
IMP027		1		W2 - 158.5
GL526		2		W2 - 158.5
GL526		2		H - 376.5
IMP616		1		W - 79.5
VG12		2		H - 376.5
VG532		1		H - 305
VG533		1		H - 305
UTL072		1		W1 - 79.5
UTL072		1		W2 - 79.5
IMP300		1		H - 164.5
IMP114		2		H - 164.5
IMP114		1		W1 - 79.5
IMP114		1		W2 - 79.5
PCX46		1		H - 169
UTL032		1		W2 - 220
UTL076		1		W2 - 220

Door Glass	W - 172.5 x H - 346.5
Screen Glass	W - 63.5 x H - 183

ACVG131	(2 x H) + (2 x W1)	Gasket
ACVG34	(4 x H) + (2 x W)	Gasket
ACVG31	(2 x H) + (2 x W2)	Gasket
ACDV205	W + (2 x H)	Woolpile
ACSH035	2 x H	Woolpile
ACSR011	2 x W2	Woolpile
ACET064	Fitted 150mm from each end and at 600mm centres	Screw (VG12)
ACET099	Fitted 150mm from each end and at 600mm centres	Screw (IMP114)
ACET099	Fitted 150mm from each end and at 600mm centres	Screw (UTL072)
ACMC109	2 per ACIM123	Screw (ACIM123)
ACET290	6	Polyamide Screw (ACIM121)
ACIM127	4	Cleat
ACIM002	4	Cleat
ACIM002	4	Cleat
ACIM043	1	IMP043 End Cap
ACIM011	1	IMP040 End Cap
ACIM057	4	Bridge Packer
ACSZ040/1/2	1	BT Lock
ACSZ049	1	BT Lock Fixing Kit
ACIM121	3	Auto Mechanism Bracket
ACIM123	Fitted at 600mm centres	Guide Channel Bracket
ACIM442	1	Cylinder
ACIM130	8	Foam Insert
ACSZ750	1	Handle Grip
ACSZ751	1	Handle Grip
ACVG533	1	VG533 End Caps
ACDV241	8	Lock Fixing Plates
ACDV266	8	Lock Fixing Screws
ACIM272	1	PAS24 Single Door Bracket Kit
ACIM280	1	Fixing Kit for PAS24

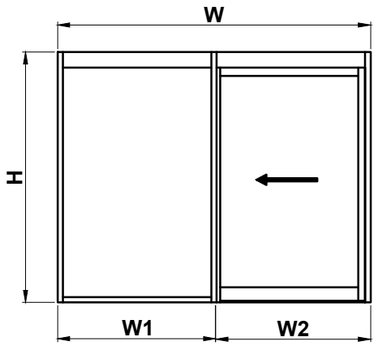

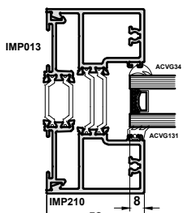

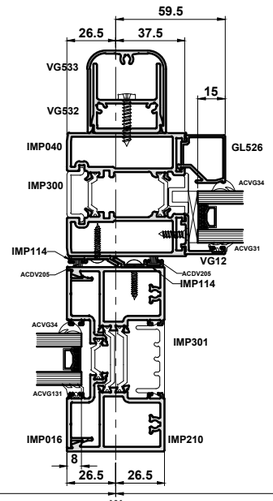

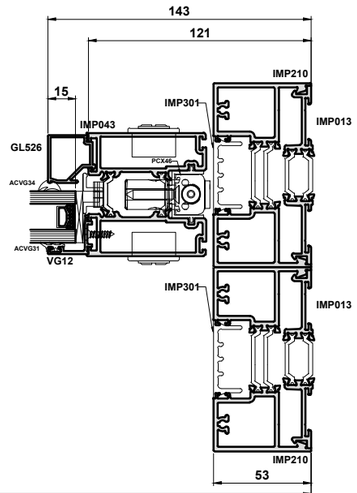

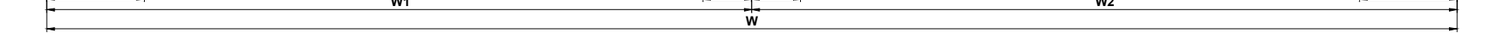

Dormakaba
Tel: 01462 477600
Email: info.gb@dormakaba.com

When specifying Auto-Slide doors to PAS 24:2016, please note as follows:-

- Please contact Dormakaba to ensure door proposed is within gearing parameters
- Dormakaba will carry out a site risk assessment to ensure compliance with EN12101-2
- Specify bracket finish when ordering (to match frame finish)
- Bracket and fixing kits must be supplied to Dormakaba to allow installation on site with doors

Do Not Scale From This Drawing

Double Door Autoslide PAS24:2016

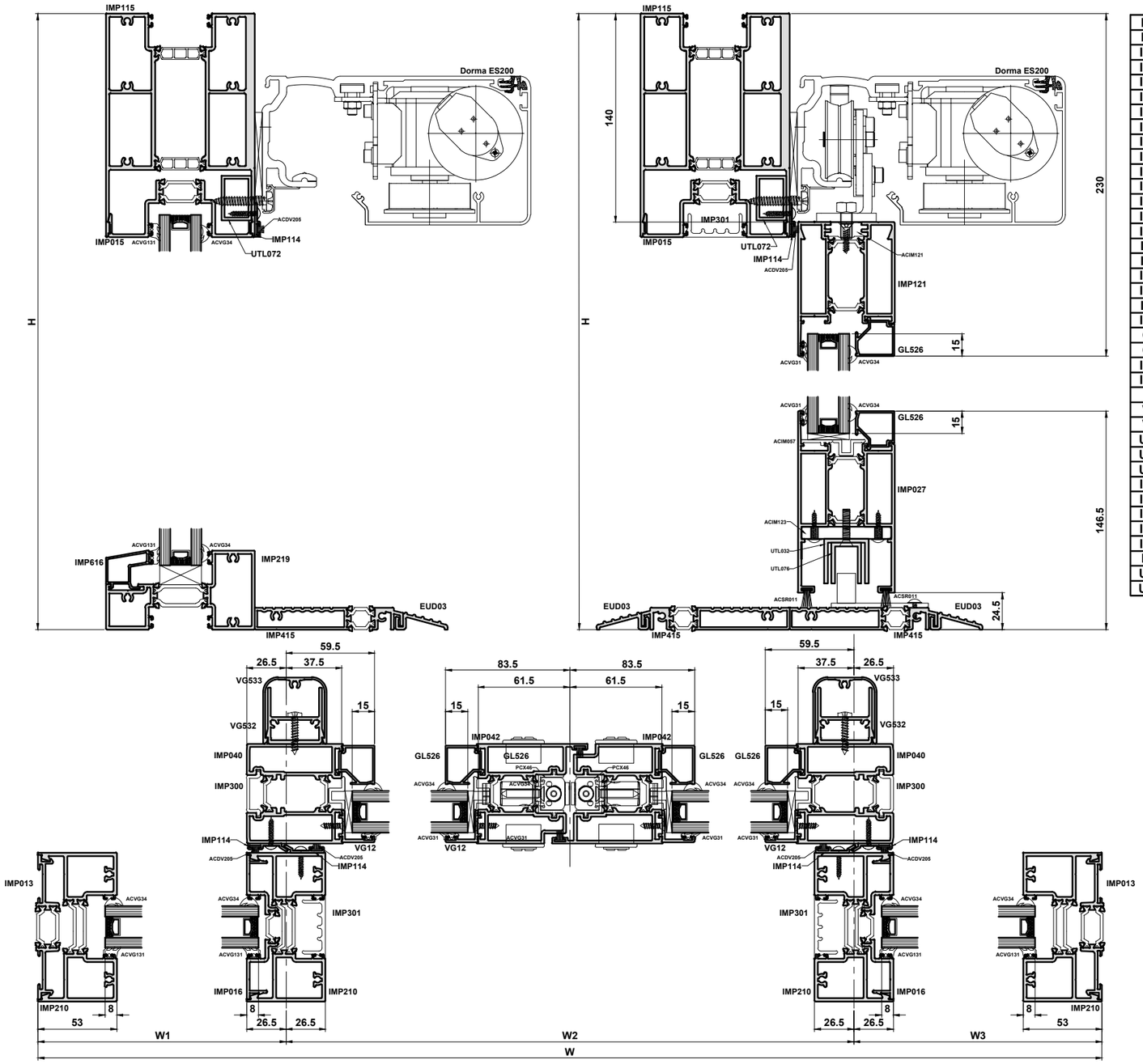

EUD03		1		W - 53
EUD03		1		W2 - 53
IMP415		1		W
IMP415		1		W2 - 53
IMP210		4		H
IMP013		2		H
IMP016		2		H
IMP115		1		W1 - 79.5
IMP115		1		W2 - 79.5
IMP115		1		W3 - 79.5
IMP219		1		W1 - 79.5
IMP219		1		W3 - 79.5
IMP015		1		W1 - 79.5
IMP015		1		W2 - 53
IMP015		1		W3 - 79.5
IMP301		2		H
IMP301		1		W2 - 53
IMP040		2		H - 169
IMP042		2		H - 169
IMP121		2		(W2 / 2) - 99
IMP027		2		(W2 / 2) - 99
GL526		4		(W2 / 2) - 99
GL526		4		H - 376.5
IMP616		1		W1 - 79.5
IMP616		1		W3 - 79.5
VG12		4		H - 376.5
VG532		2		H - 305
VG533		2		H - 305
UTL072		1		W1 - 79.5
UTL072		1		W2 - 79.5
UTL072		1		W3 - 79.5
IMP300		2		H - 164.5
IMP114		4		H - 164.5
IMP114		1		W1 - 79.5
IMP114		1		W2 - 79.5
IMP114		1		W3 - 79.5
PCX46		2		H - 164.5
UTL032		2		(W2 / 2) - 220
UTL076		2		(W2 / 2) - 220

ACVG131	(4 x H) + (2 x W1) + (2 x W3)	Gasket
ACVG34	(8 x H) + (2 x W)	Gasket
ACVG31	(4 x H) + (2 x W2)	Gasket
ACDV205	W + (4 x H)	Woolpile
ACSH032	2 x H	Woolpile
ACSR011	2 x W2	Woolpile
ACET064	Fitted 150mm from each end and at 600mm centres	Screw (VG12)
ACET099	Fitted 150mm from each end and at 600mm centres	Screw (IMP114)
ACET099	Fitted 150mm from each end and at 600mm centres	Screw (UTL072)
ACMC109	2 per ACIM123	Screw (ACIM123)
ACET290	12	Polyamide Screw (ACIM121)
ACIM127	8	Cleat
ACIM027	8	Cleat
ACIM002	8	Cleat
ACIM042	2	IMP042 End Cap
ACIM011	2	IMP040 End Cap
ACIM057	8	Bridge Packer
ACSZ040/1/2	2	BT Lock
ACSZ049	2	BT Lock Fixing Kit
ACIM121	6	Auto Mechanism Bracket
ACIM123	Fitted at 600mm centres	Guide Channel Bracket
ACIM442	2	Cylinder
ACIM130	16	Foam Insert
ACSZ750	2	Handle Grip
ACSZ751	2	Handle Grip
ACVG533	2	VG533 End Caps
ACDV241	16	Lock Fixing Plates
ACDV266	16	Lock Fixing Screws
ACIM271	1	PAS24 Single Door Bracket Kit
ACIM280	2	Fixing Kit for PAS24

Door Glass	W2 / 2 - 113 x H - 346.5
W1 - Screen Glass	W - 63.5 x H - 183
W3 - Screen Glass	W - 63.5 x H - 183

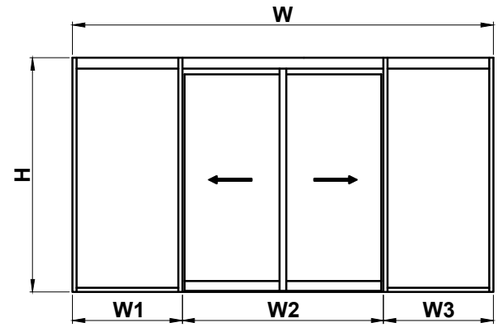

Dormakaba
Tel: 01462 477600
Email: info.gb@dormakaba.com

When specifying Auto-Slide doors to PAS 24:2016, please note as follows:-

- **Please contact Dormakaba to ensure door proposed is within gearing parameters**
- **Dormakaba will carry out a site risk assessment to ensure compliance with EN12101-2**
- **Specify bracket finish when ordering (to match frame finish)**
- **Bracket and fixing kits must be supplied to Dormakaba to allow installation on site with doors**

Do Not Scale From This Drawing