Main Index

W Index **Index**..... A01 - A02

A W **Profiles**

Specification Pages..... A03 - A08
Technical Information..... A09 - A14
Scale Profile Drawings..... A15 - A32

B W **Accessories**

Photos & Drawings..... B03 - B28

C W **Sections**

Scale Elevations..... C03 - C44

D W **Statics**..... D01 - D02

E W **Construction Drawings**

Corner Joint Detail..... E03
Crimping Detail..... E04
Drainage Detail..... E05 - E07
Installation of ACW20345 using ACW20344..... E08
Mullion/Transom Detail..... E09 - E10
Friction Stay Detail..... E11 - E12
Lock Detail..... E13 - E14
Peg Stay Detail..... E15
Coupler Detail..... E16
Glazing Chart..... E17 - E18
Bay Pole Detail..... E19 - E20
Fixing Strap Guide..... E21
Example Layout..... E22

F W **Sawing Tables**

Cutting Information..... F03
Cutting Information..... F04
Cutting Information..... F05
Cutting Information..... F06

Updates

DATE	PAGE	DESCRIPTION

Specification

GENERAL DESCRIPTION

The "Alitherm Heritage HD" window system described in this manual is designed to offer a modern aluminium thermally broken replacement to steel windows. Taking inspiration from traditional steel windows, Alitherm Heritage HD features signature slim sightlines and attractive aesthetic contours coupled with polyamide thermal break technology giving Alitherm Heritage HD enhanced thermal performance and narrow sightlines.

Alitherm Heritage HD is designed to be built as a series of horizontal or vertical modules which can be stacked using horizontal couplers to form a multi-part window featuring a specially design drip bar between modules.

Applications:

Windows:

- Fixed windows
- Side hung open out casements
- Top hung open out casements

Corner assembly of Alitherm Heritage HD is crimping only.

PROFILE SPECIFICATION

The window frame are constructed of aluminium alloy extrusion to BS EN 755-9 and BS EN 12020, extruded from 6060 T6 alloy. The internal and external extrusions are separated with a polyamide thermal break.

The external aluminium alloy extrusion is pre-treated and finished either:-

a) Anodised to BS 3987: 1987, grade AA25 to a natural self colour.

b) Polyester powder organic coating to BS 6496. Dual colour is available.

Specification

GENERAL MANUFACTURING

Outer and vent frames are made by cutting the frame profiles with accurate 45° mitred ends using Tungsten Carbide Tipped Saw Blades, operating at approximately 3000 rpm.

The corners are joined using the Alitherm Heritage HD crimping cleats to form a cold forged corner joint (made by deforming small slugs of metal into the groove of the corner cleat).

The ends of transoms and mullions are profiled to fit the frame and fixed using self-tapping screws with a small joint sealant.

On polyester powder coated finishes, great care should be taken to avoid getting gap sealer on visible surfaces and should be removed as soon as possible with a clean cloth.

Care should be exercised when using products not supplied by Smart Systems Ltd as no responsibility can be accepted.

For advise on window sizes outside of the recommended design limitations, please contact the Technical Department at Smart Systems Ltd Tel: 01934 876100

Specification

WINDOW DRAINAGE

As with all dry glazed systems, it is recommended that the window system is adequately drained and ventilated. Refer to drainage details in manual, if in doubt ask The Technical Department.

In order to get maximum performance and weather resistance it is recommended that drips are used over all vents.

OUTER FRAME MANUFACTURING INFORMATION

The outer frame members are cut with 45° mitred ends to the overall size required, measured to the longest point of the metal.

Prior to corner crimping the centre line position of any transoms or mullions should be marked on the outer frame members. Where the transom/mullion runs right through, it should be marked out on both jambs or head and cill members in pairs to ensure accurate alignment of the sections.

Using the marked centre line, Drill the transom/mullion fixing holes using a 5mm dia. drill bit.

Corners are formed by coating the cut faces to be joined with a suitable small gap sealer. Into the mitred corner insert the cleat glue and the required corner cleats and, where required, the aluminium corner chevrons. The two mitred ends are then brought together and crimped. The small gap sealer ensures a permanent joint and guards against the ingress of moisture and joint movement. After crimping the corner joint, special care should be taken to ensure any excess sealer is removed from painted surfaces.

Transoms or mullions are cut with square ends to the sizes calculated on the cutting formula sheets. The ends are then profiled to allow them to fit into the outer frame. Special tooling is available on request to profile the end of transom/mullion.

Prior to fixing of transoms and mullions smear the cut ends with a suitable small gap sealer. After fixing, special care should be taken to ensure any excess is cleared from painted surfaces.

Specification

GLAZING

All beads are cut to suit the glazing aperture on the fully assembled window for glazing either at factory or on site as required.

EXTERNALLY BEADED GLAZING

Glazing beads are fitted to openings by cutting the horizontal beads square to head and cill of each vent and fixed light area. Vertical beads are cut at 45° or 90° both ends. When using glazing beads W20362, W20365 and W20366 slide retained ACET845 gasket into section and ensure it is not stretched. Insert bottom beads and two setting blocks to ensure glass will be centralized in vertical dimension of opening (glazing blocks must be full width of cavity to fully support glass or sealed unit), then insert top bead followed by side beads. Finish glazing by insertion of internal gaskets all round. We advise to seal all beads with silicon in high exposed areas.

INTERNALLY BEADED GLAZING

Glazing beads are fitted to openings by cutting the horizontal beads square to head and cill of each vent and fixed light area. Vertical beads are cut square at both ends. Insert bottom beads and two setting blocks to ensure glass will be centralized in vertical dimension of opening (glazing blocks must be full width of cavity to fully support glass or sealed unit), then insert top bead followed by side beads. Finish glazing by insertion of internal gaskets all round except in the case of 28mm glazing where glazing tape is used in conjunction with vent profile W20320 & W20325. We advise to seal all beads with silicon in high exposed areas.

Specification

Kitemark™ Certificate No. KM 81580
WINDOW DESIGN LIMITATIONS & PERFORMANCE CHARACTERISTICS

Window Type	Width (mm) - Maximum	Height (mm) - Maximum	Weight (kg) - Maximum	Area (M²) - Maximum	Friction Stays (up to and including)	Transom/Mullion Length (mm) inc frame - Maximum	Air Permeability classification	Water tightness classification	Resitance to Wind classification	Exposure category as given in Table 1 of BS 6375-1:2009
Sash dimensions for windows with approved sash profiles:										
Projecting top hung Internally beaded	1400	1400	40	-	24"	-	4	7A	AE2400	2000+
Projecting top hung Externally beaded	1400	1400	40	-	24"	-	4	5A	AE2400	2000+
Projecting side hung Internally beaded	600	1400	28	-	16"	-	4	7A	AE2400	2000+
Projecting side hung Externally beaded	600	1400	28	-	16"	-	4	5A	AE2400	2000+
Overall dimensions for windows with approved outer frame profiles:										
Fixed Internally Beaded	2100	2100	-	4.2	-	-	4	7A	AE2400	2000+
Fixed Externally Beaded	2100	2100	-	4.2	-	-	4	5A	AE2400	2000+
Overall dimensions for approved outer frames & transom/mullion profiles:										
Multilights* W2035 T/M Internally Beaded	2100	2100	-	2.5	-	1450	4	7A	AE2400	2000+
Multilights* W2035 T/M Externally Beaded	2100	2100	-	2.5	-	1450	4	5A	AE2400	2000+

***Transom/mullion subject to Ixx/Iyy requirements**

Please see pages B36, 37 & 38 for more guidance on vent sizes, limitations & hardware selection.

⚠ Important! ⚠

The size parameters shown against Kitemark are the maximum allowed without the need for further testing.
Please note these are not necessarily the system parameters which may be smaller or larger.
Please refer to fabrication parameters in this manual.

Specification

Number	Picture	Page	Perim. mm	Mec. mm	Ix(cm4) wx(cm3)	Iy(cm4) wy(cm3)	Length	Pack pr.	MF	SA	KL	HP	M
DV515	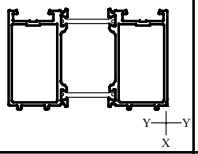	A26	356	85	27.16 — 7.76	14.38 — 6.75	6.5	1	✓	✓	✓	✓	✓
ETC080	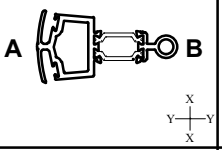	A25	334	61	25.58 ----- 5.47	4.88 ----- 2.57	6.5	1	✓	✓	✓	✓	✓
ETC081	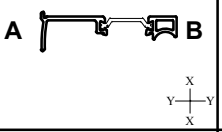	A25	197	35	13.85 ----- 3.8	0.36 ----- 0.52	6.5	1	✓	✓	✓	✓	✓
ETC082	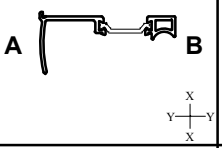	A25	221	47	16.21 ----- 4.19	1.15 ----- 1.29	6.5	1	✓	✓	✓	✓	✓
ETC083	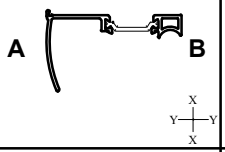	A25	248	58	17.66 ----- 4.32	2.64 ----- 2.36	6.5	1	✓	✓	✓	✓	✓
ETC451	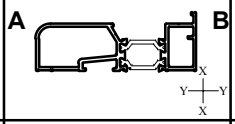	A33	271	180	32.44 ----- 7.29	3.46 ----- 2.79	6.5	1	✓	✓	✓	✓	✓
ETC452	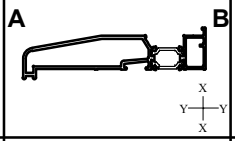	A33	414	382	122.46 ----- 18.03	6.01 ----- 3.34	6.5	1	✓	✓	✓	✓	✓
ETC457	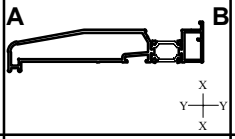	A33	444	412	163.27 ----- 21.60	6.79 ----- 3.73	6.5	1	✓	✓	✓	✓	✓
ETC458	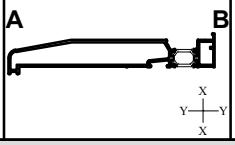	A33	524	492	313.62 ----- 32.63	8.87 ----- 4.79	6.5	1	✓	✓	✓	✓	✓

A = Outside
B = Inside

MF = Mill Finish
SA = Silver Anodised
KL = Basic Colour
HP = Special Colour
M = Dual Colour

Alitherm Heritage HD

PROFILES : TECHNICAL INFORMATION

Number	Picture	Page	Perim. mm	Mec. mm	Ix(cm4) wx(cm3)	Iy(cm4) wy(cm3)	Length	Pack pr.	MF	SA	KL	HP	M
ETC479N	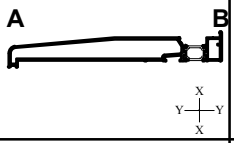	A34	594	559	501.64 ----- 44.04	9.72 ----- 5.34	6.5	1	✓	✓	✓	✓	✓
ETC853	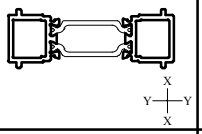	A32	219	54	23.28 ----- 6.65	1.94 ----- 1.43	6.5	1	✓	✓	✓	✓	✓
SPD750	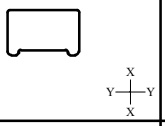	A19	31	31	- — -	- — -	4	1	✓	✓	✓	✓	✓
UN3000	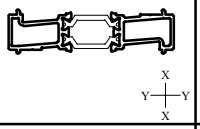	A31	200	43.5	15.8 ----- 4.51	0.79 ----- 0.84	6.5	1	✓	✓	✓	✓	✓
W20069	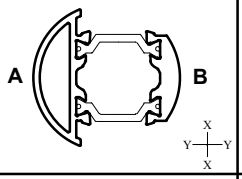	A23	192	71	5.05 ----- 2.55	2.00 ----- 1.12	5	1	✓	✓	✓	✓	✓
W20135N	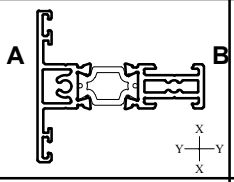	A19	270	64	7.37 ----- 4.12	1.82 ----- 0.86	6.5	1	✓	✓	✓	✓	✓
W20168	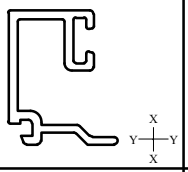	A27	110	27	- — -	- — -	5	1	✓	✓	✓	✓	
W20170	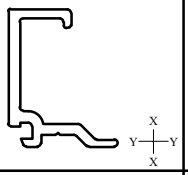	A28	83	24	- — -	- — -	4	1	✓	✓	✓	✓	
W20171	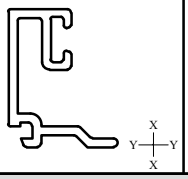	A28	105	34	- — -	- — -	4	1	✓	✓	✓	✓	

A = Outside
B = Inside

MF = Mill Finish
SA = Silver Anodised
KL = Basic Colour
HP = Special Colour
M = Dual Colour

ISSUED : AUGUST 2020

Number	Picture	Page	Perim. mm	Mec. mm	Ix(cm4) wx(cm3)	Iy(cm4) wy(cm3)	Length	Pack pr.	MF	SA	KL	HP	M
W20310	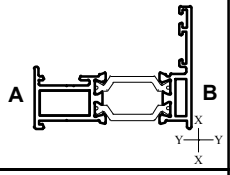	A17	268	66	11.07 / 3.74	2.55 / 1.91	6.5	1	✓	✓	✓	✓	✓
W20317	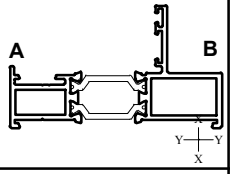	A17	307	83	18.50 / 5.07	2.89 / 2.26	6.5	1	✓	✓	✓	✓	✓
W20320	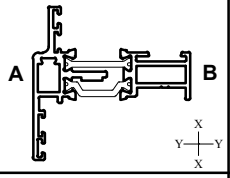	A18	335	75	10.15 / 3.12	3.17 / 1.37	6.5	1	✓	✓	✓	✓	✓
W20325	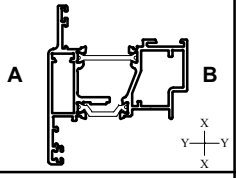	A18	439	124	22.41 / 6.14	12 / 3.51	6.5	1	✓	✓	✓	✓	✓
W20330	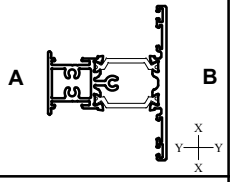	A20	402	105	16.50 / 5.34	7.58 / 2.23	6.5	1	✓	✓	✓	✓	✓
W20331	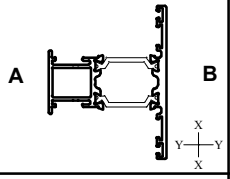	A21	369	105	14.98 / 4.55	7.51 / 2.21	6.5	1	✓	✓	✓	✓	✓
W20332	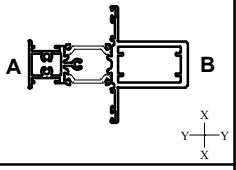	A20	482	185	63.83 / 12.49	11.51 / 3.39	6.5	1	✓	✓	✓	✓	✓
W20333	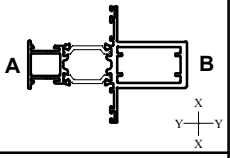	A21	450	185	56.57 / 10.53	11.43 / 3.36	6.5	1	✓	✓	✓	✓	✓
W20345	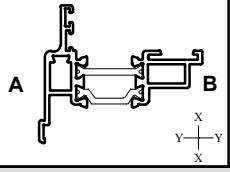	A22	281	62	8.30 / 2.57	2.21 / 0.99	6.5	1	✓	✓	✓	✓	✓

A = Outside
B = Inside

MF = Mill Finish
SA = Silver Anodised
KL = Basic Colour
HP = Special Colour
M = Dual Colour

Number	Picture	Page	Perim. mm	Mec. mm	Ix(cm4) wx(cm3)	Iy(cm4) wy(cm3)	Length	Pack pr.	MF	SA	KL	HP	M
W20348	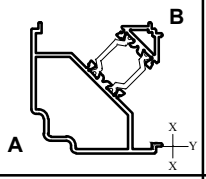	A24	281	114	14.09 — 5.14	14.09 — 5.16	6.5	1	✓	✓	✓	✓	✓
W20349	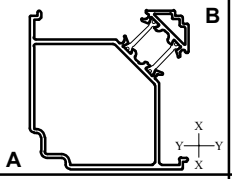	A24	409	139	39.81 — 10.70	39.81 — 11.31	6.5	1	✓	✓	✓	✓	✓
W20350	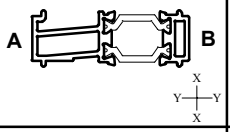	A31	204	36	7.88 — 2.97	0.67 — 0.74	6.5	1	✓	✓	✓	✓	✓
W20351	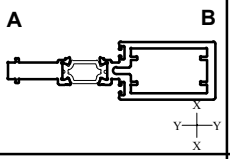	A23	304	126	70.43 ---- 13.14	4.78 ---- 3.54	6.5	1	✓	✓	✓	✓	✓
W20354	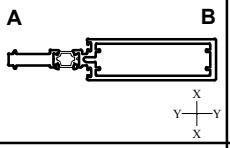	A23	384	212	184.38 ---- 25.75	22.41 ---- 6.12	6.5	1	✓	✓	✓	✓	✓
W20356	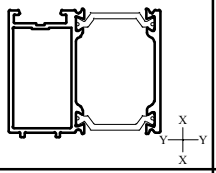	A26	294	85.5	7.25 — 3.19	12.51 — 4.65	6.5	1	✓	✓	✓	✓	✓
W20362	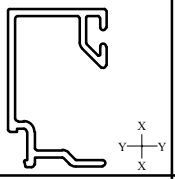	A27	141	36.5	- — -	- — -	6.5	1	✓	✓	✓	✓	
W20365	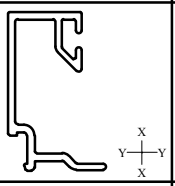	A28	133	32.5	- — -	- — -	6.5	1	✓	✓	✓	✓	
W20366	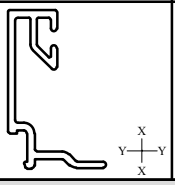	A29	125	28.5	- — -	- — -	6.5	1	✓	✓	✓	✓	

A = Outside
B = Inside

MF = Mill Finish
SA = Silver Anodised
KL = Basic Colour
HP = Special Colour
M = Dual Colour

Number	Picture	Page	Perim. mm	Mec. mm	Ix(cm4) wx(cm3)	Iy(cm4) wy(cm3)	Length	Pack pr.	MF	SA	KL	HP	M
W20370	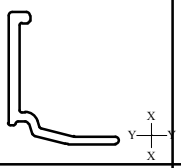	A29 & A30	63	15.5	- / -	- / -	6.5	1	✓	✓	✓	✓	
W20371	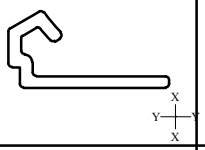	A23	70	19	- / -	- / -	6.5	1	✓	✓	✓	✓	
W20372	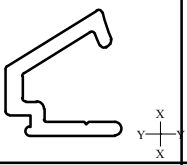	A23	79	26.5	- / -	- / -	6.5	1	✓	✓	✓	✓	
W20385	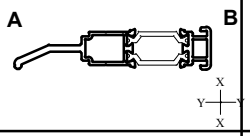	A30	259	101	24.65 / 5.24	0.76 / 0.87	6.5	1	✓	✓	✓	✓	✓
W20386	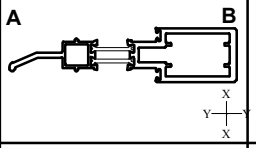	A30	375	198	102.48 / 12.84	6.57 / 4.47	6.5	1	✓	✓	✓	✓	✓
W20387	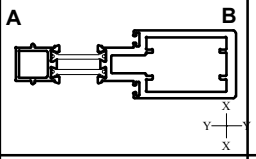	A31	312	135	54.56 / 9.15	6.47 / 4.31	6.5	1	✓	✓	✓	✓	✓
W20389	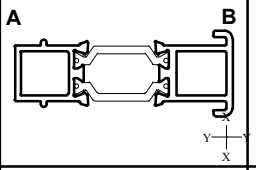	A31	209	47	10.28 / 3.26	0.92 / 0.81	6.5	1	✓	✓	✓	✓	✓

A = Outside
B = Inside

MF = Mill Finish
SA = Silver Anodised
KL = Basic Colour
HP = Special Colour
M = Dual Colour

Number	Picture	Page	Perim. mm	Mec. mm	Ix(cm4) wx(cm3)	Iy(cm4) wy(cm3)	Length	Pack pr.	MF	SA	KL	HP	M
						X Y Y X							
						X Y Y X							
						X Y Y X							
						X Y Y X							
						X Y Y X							
						X Y Y X							
						X Y Y X							
						X Y Y X							
						X Y Y X							

A = Outside
B = Inside

MF = Mill Finish
SA = Silver Anodised
KL = Basic Colour
HP = Special Colour
M = Dual Colour

Primary Visible Side - - - - - - - - - - - - - - - - - - Secondary Visible Side — · — · — · — · — · — · — · —

W20310
Outerframe

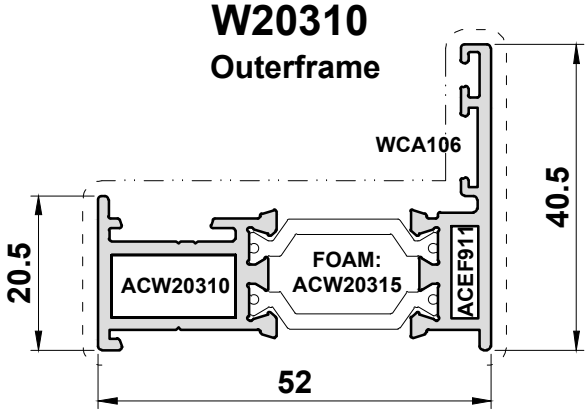

W20317
70mm Outerframe

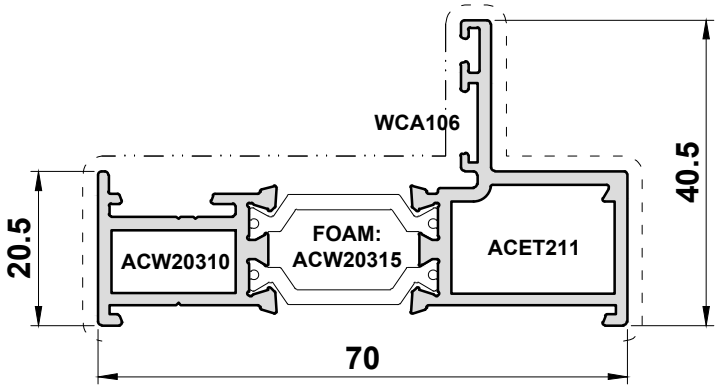

Scale 1:1

Primary Visible Side - - - - - - - - - - - - - - - - - - Secondary Visible Side — · — · — · — · — · — · —

W20320
Vent

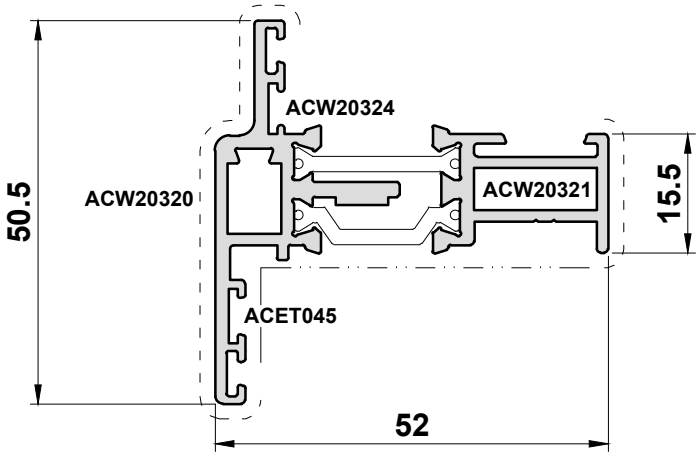

W20325
Deep Vent

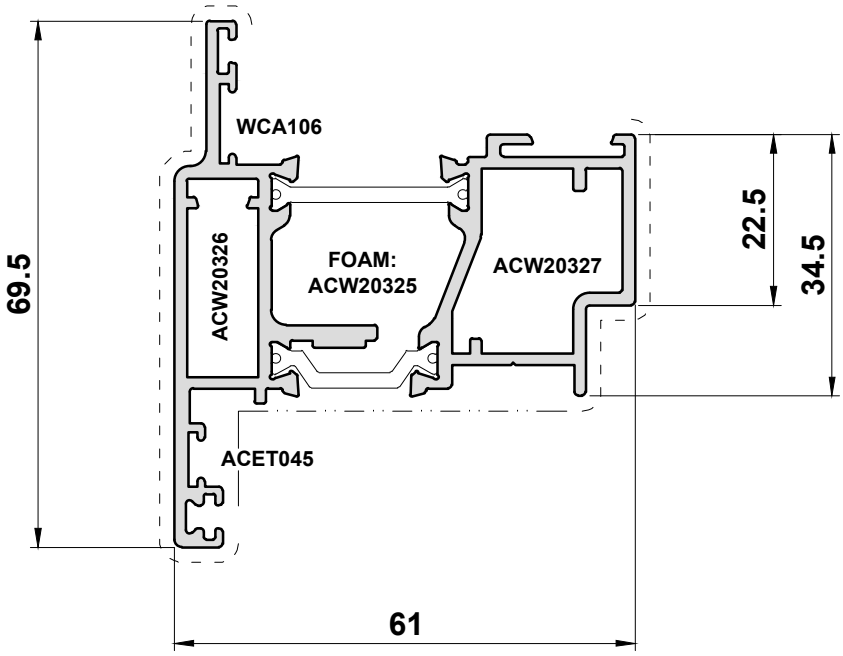

Scale 1:1

Primary Visible Side - - - - - - - - - - - - - - - - - - Secondary Visible Side — · · — · · — · · — · · — · · — · · — · · —

W20135N

Dummy Transom

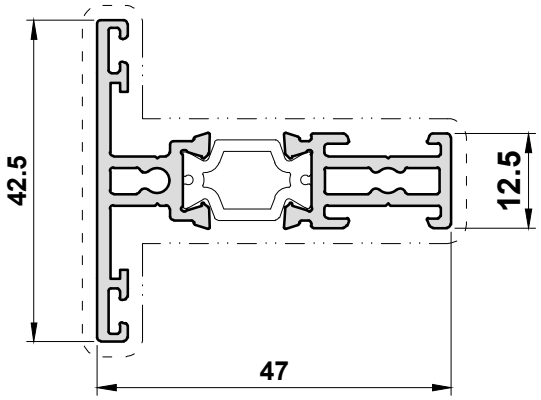

Scale 1:1

Primary Visible Side - - - - - - - - - - - - - - - - Secondary Visible Side — · — · — · — · — · — · —

W20330

Transom / Mullion

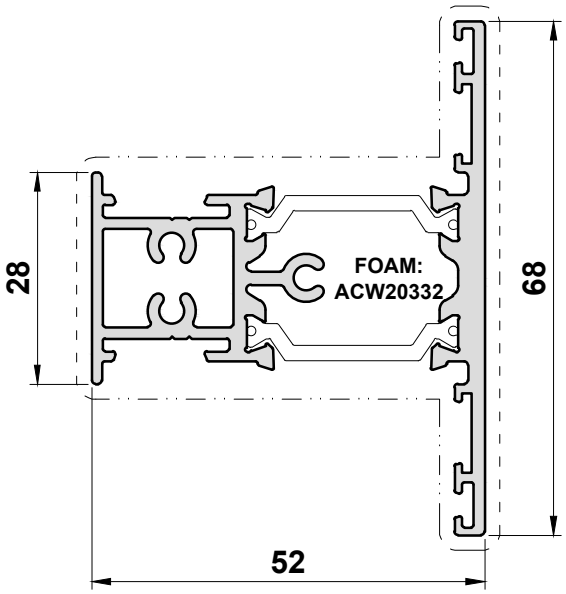

W20332

Reinforced Transom / Mullion

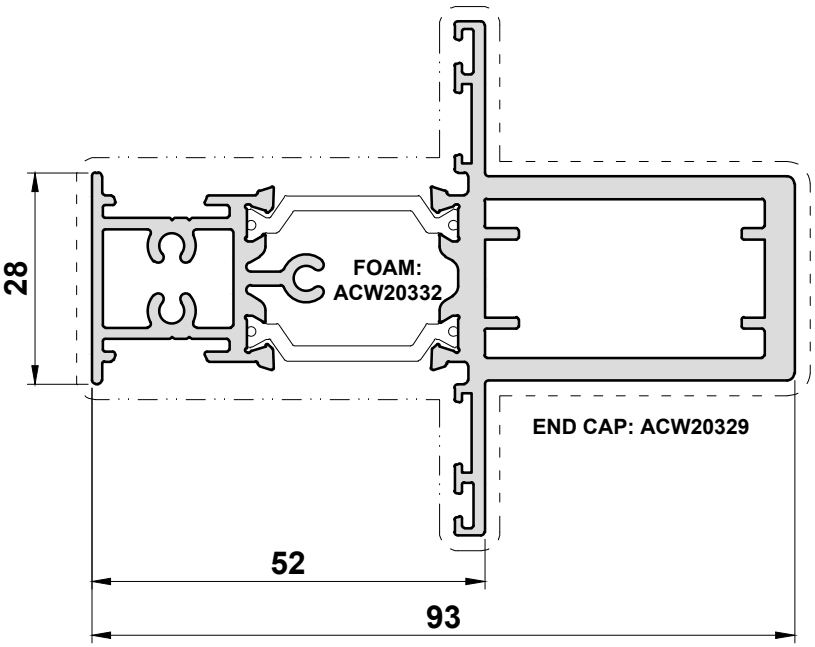

Scale 1:1

Primary Visible Side - - - - - - - - - - - - - - - - - - Secondary Visible Side — · — · — · — · — · — · —

W20331

Transom / Mullion

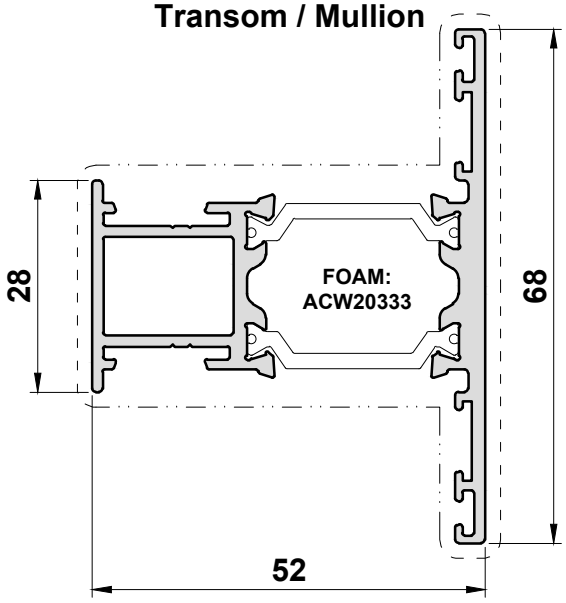

W20333

Reinforced Transom / Mullion

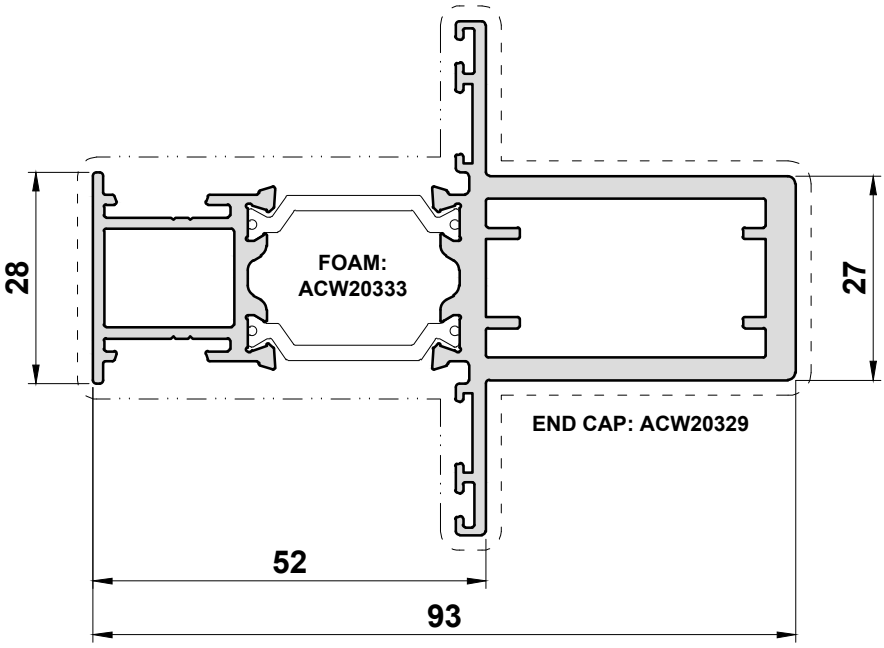

Scale 1:1

Primary Visible Side — — — — — — — — — — — — — — — — Secondary Visible Side — · · — · · — · · — · · — · · — · · — · · —

W20345
Reverse Adaptor

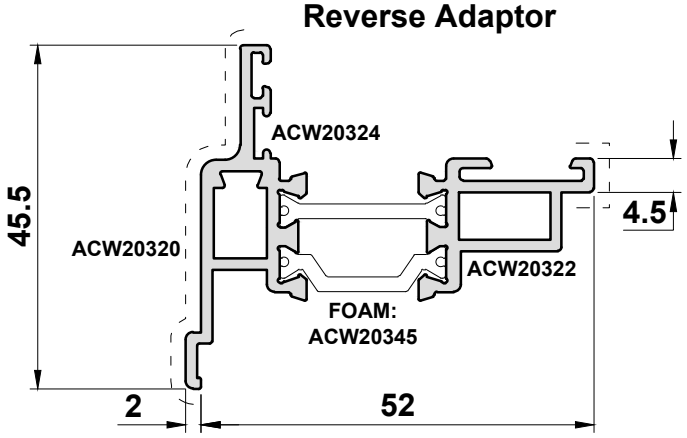

Scale 1:1

Primary Visible Side — — — — — — — — — — — — — — — — Secondary Visible Side — · — · — · — · — · — · — · —

W20351
Coupler / Mullion

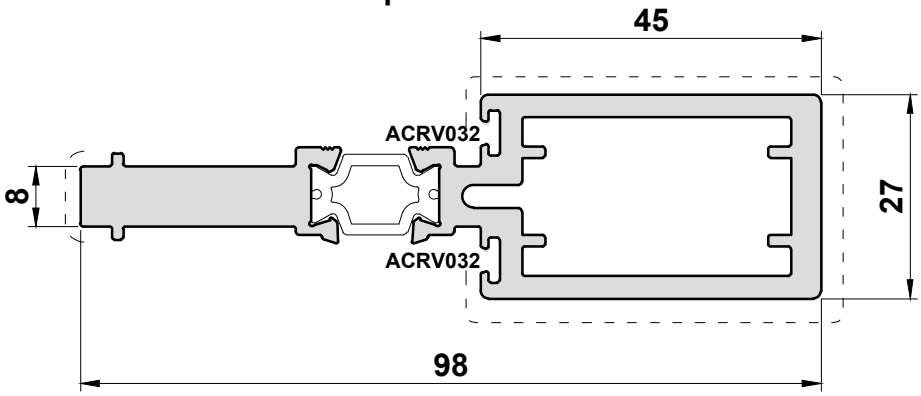

W20354
Coupler / Mullion

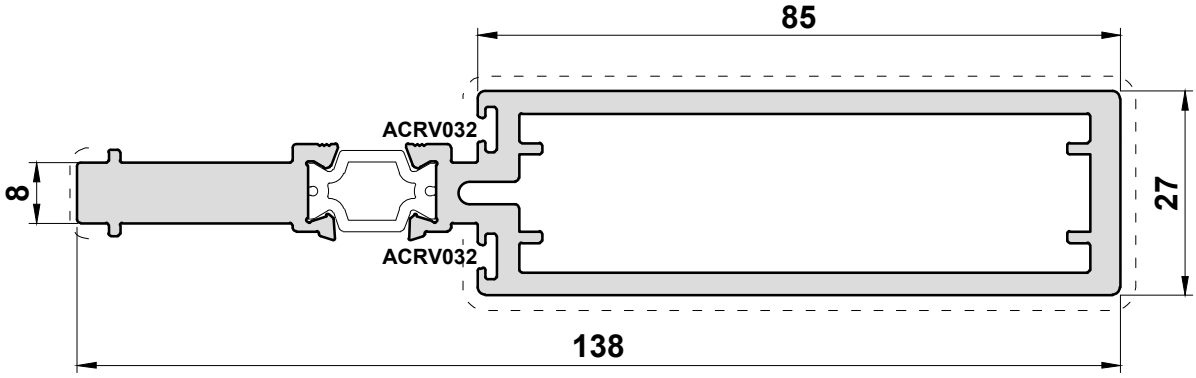

W20371
Bay Pole Adaptor

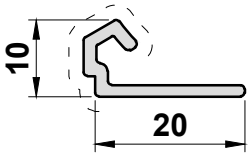

W20372
Bay Pole Adaptor

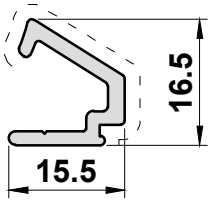

SPD750
Cill Infill

W20069
W20310 Bay Pole

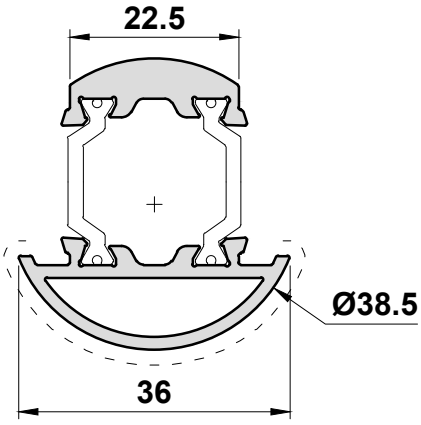

Scale 1:1

Primary Visible Side - - - - - - - - - - - - - - - - - - Secondary Visible Side — · — · — · — · — · — · — · —

W20348

52mm 90° Corner Post

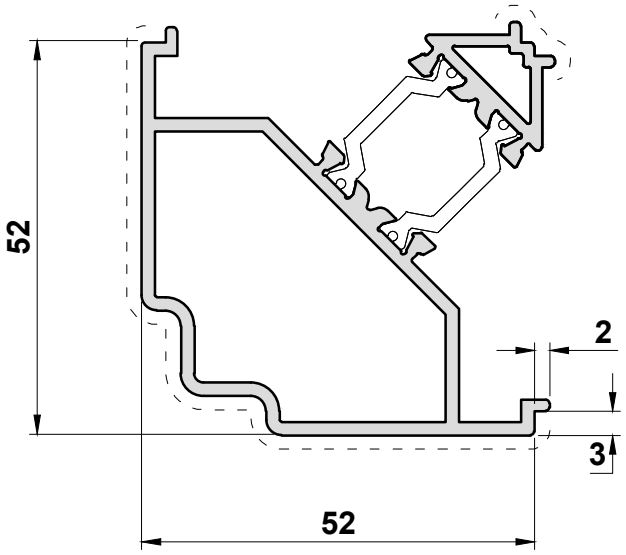

W20349

70mm 90° Corner Post

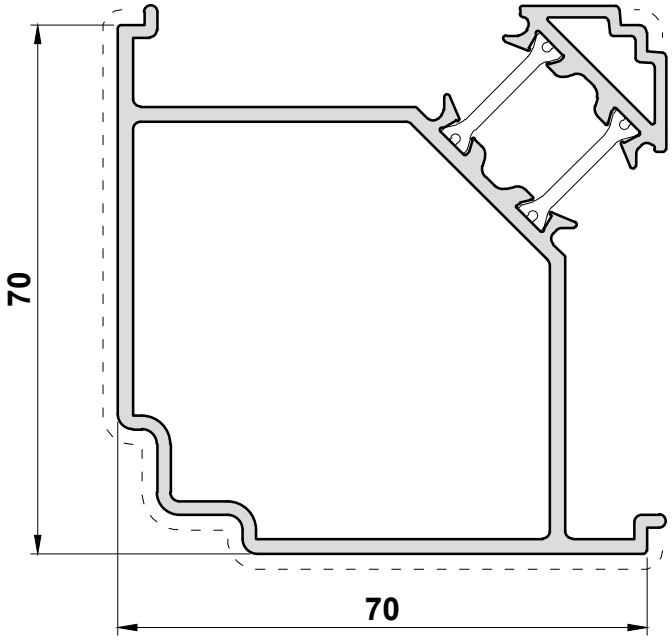

Scale 1:1

Primary Visible Side - - - - - - - - - - - - - - - - - - Secondary Visible Side — · — · — · — · — · — · — · —

ETC080
Bay Pole

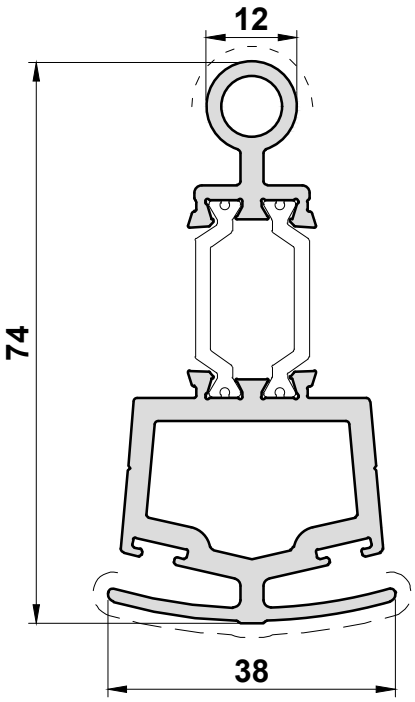

ETC081
169° - 150°
Bay Pole Adaptor

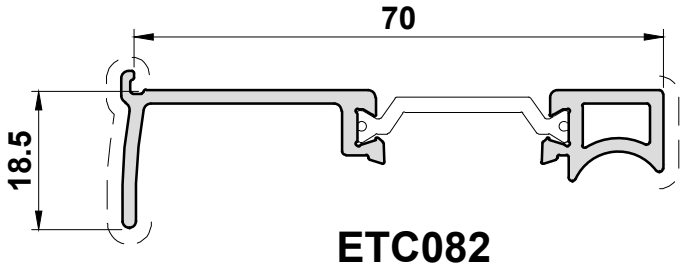

ETC082
149° - 130°
Bay Pole Adaptor

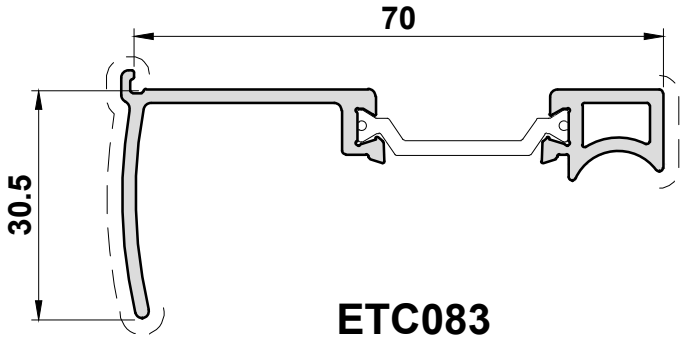

ETC083
129° - 115°
Bay Pole Adaptor

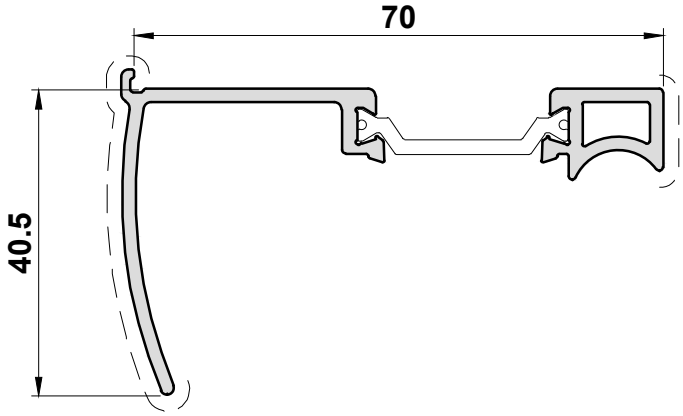

Scale 1:1

Primary Visible Side - - - - - - - - - - - - - - - - - - Secondary Visible Side — · — · — · — · — · — · — · —

DV515

70 x 42mm Head Extension

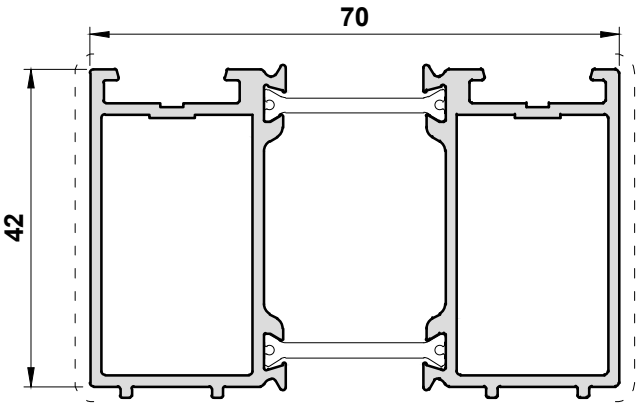

W20356

52 x 42mm Head Extension

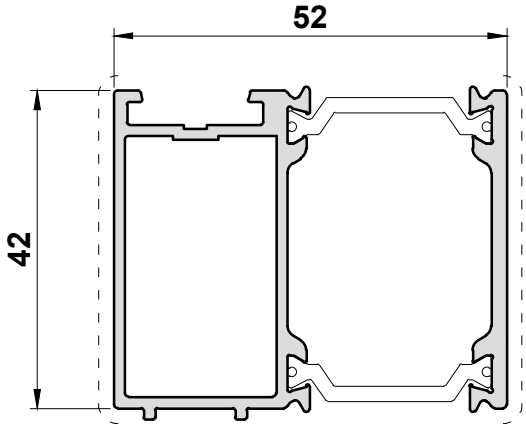

Scale 1:1

Primary Visible Side - - - - - - - - - - - - - - - - - - Secondary Visible Side — · · — · · — · · — · · — · · — · · —

W20362

24mm Square Bead

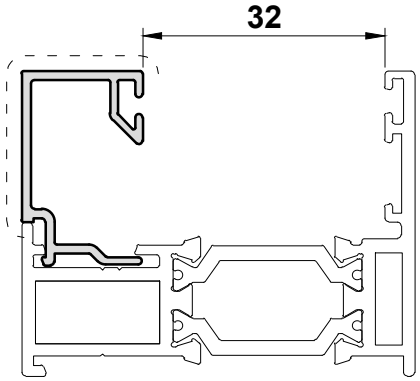

W20168

24mm Squared Bead

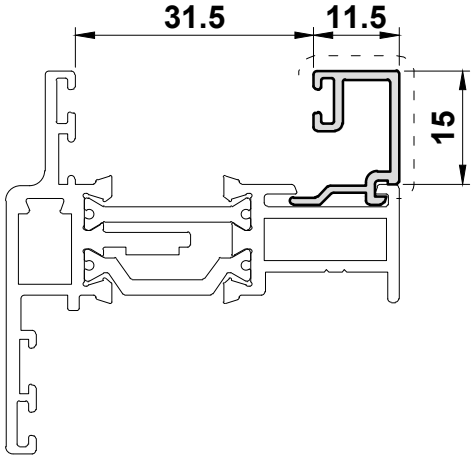

Scale 1:1

Primary Visible Side - - - - - - - - - - - - - - - - - - Secondary Visible Side — · · — · · — · · — · · — · · — · · —

W20365
28mm Square Bead

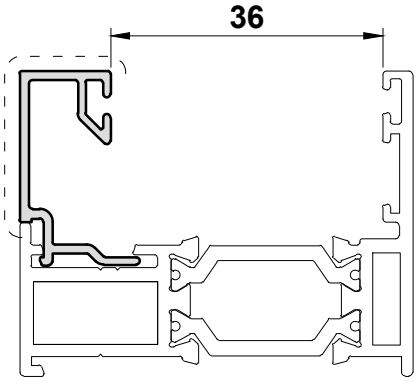

W20171
28mm Squared Bead

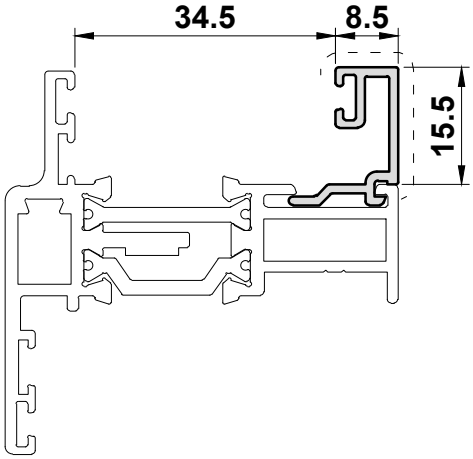

W20170
28mm Squared Bead
(Direct Handle Fixing)

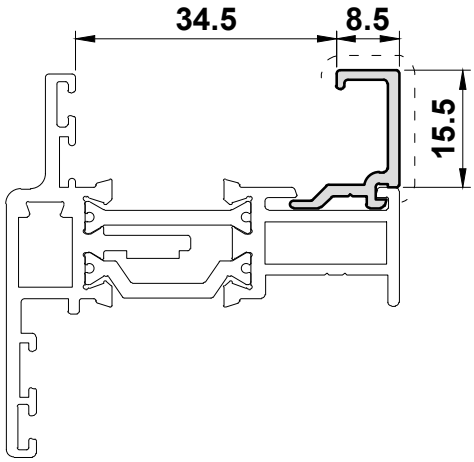

Scale 1:1

Primary Visible Side - - - - - - - - - - - - - - - - - - Secondary Visible Side — · — · — · — · — · — · — · —

W20366

32mm Square Bead

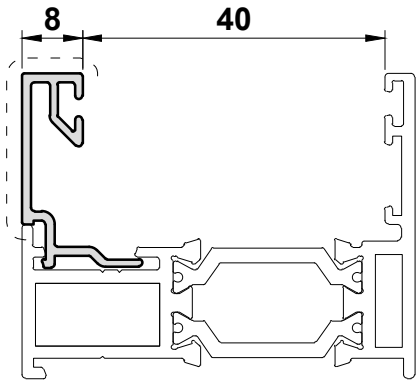

W20370

32mm Bead for W20320

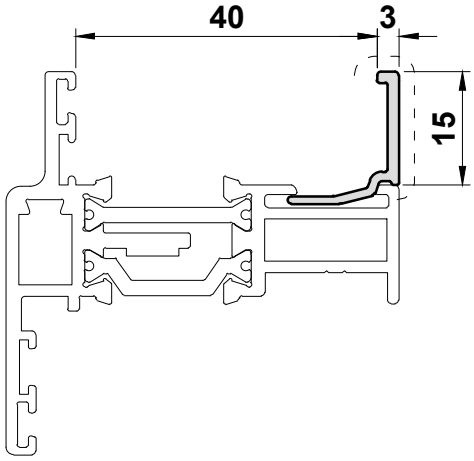

Scale 1:1

Primary Visible Side - - - - - - - - - - - - - - - - - - Secondary Visible Side — · · — · · — · · — · · — · · — · · — · · —

W20370

42mm Bead for W20325

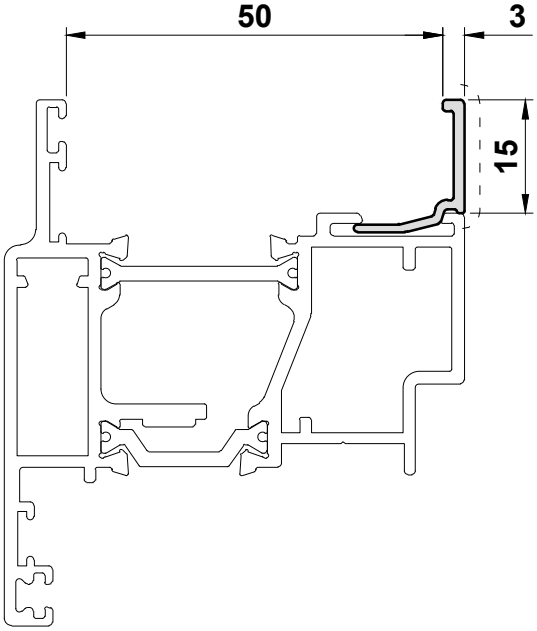

Scale 1:1

Primary Visible Side - - - - - - - - - - - - - - - - - - Secondary Visible Side — · — · — · — · — · — · — · —

W20350

Horizontal Coupler

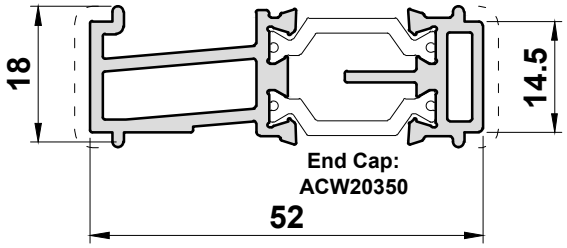

W20385

Horizontal Coupler with Drip Bar

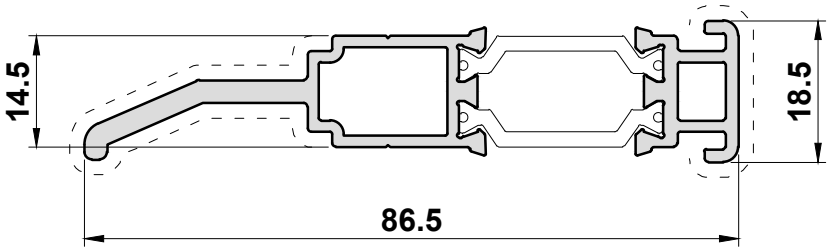

W20386

45mm Box Horizontal Coupler with Drip Bar

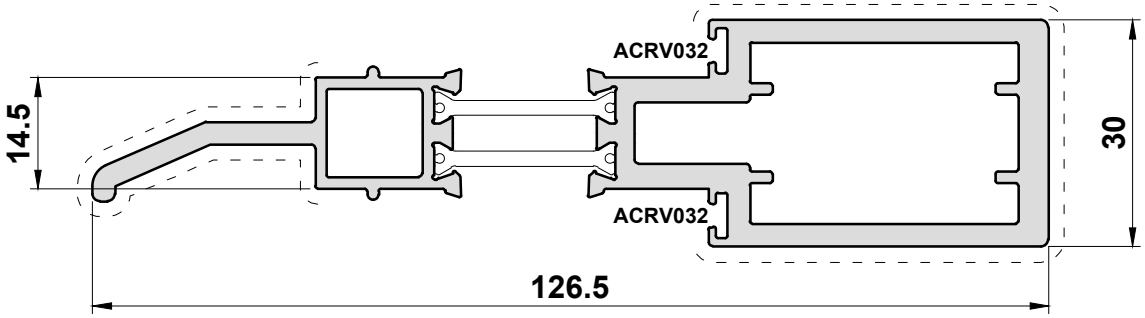

UN3000

Horizontal Coupler

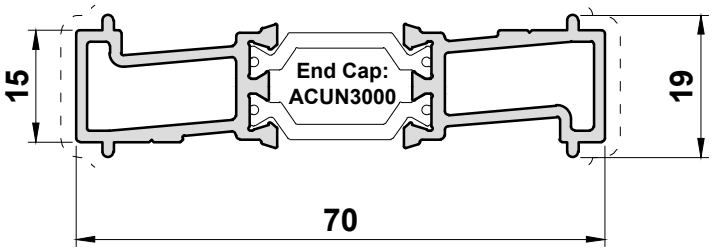

Scale 1:1

Primary Visible Side - - - - - - - - - - - - - - - - - - Secondary Visible Side — · — · — · — · — · — · — · —

W20387

45mm Box Vertical Coupler

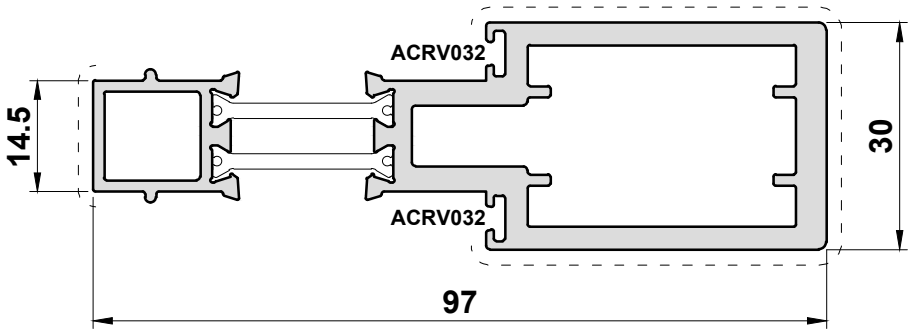

W20389

Vertical Coupler

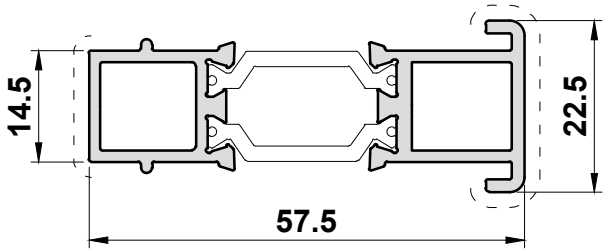

ETC853

Coupler

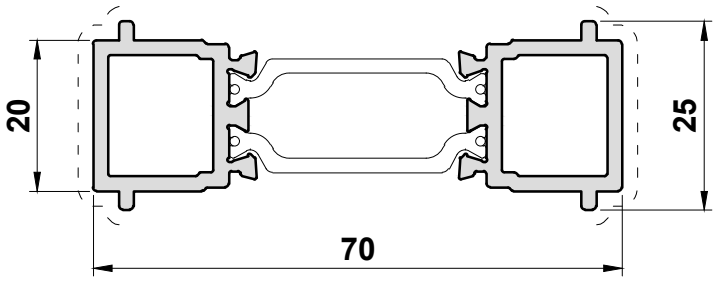

Scale 1:1

Primary Visible Side - - - - - - - - - - - - - - - - - - Secondary Visible Side — · — · — · — · — · — · — · —

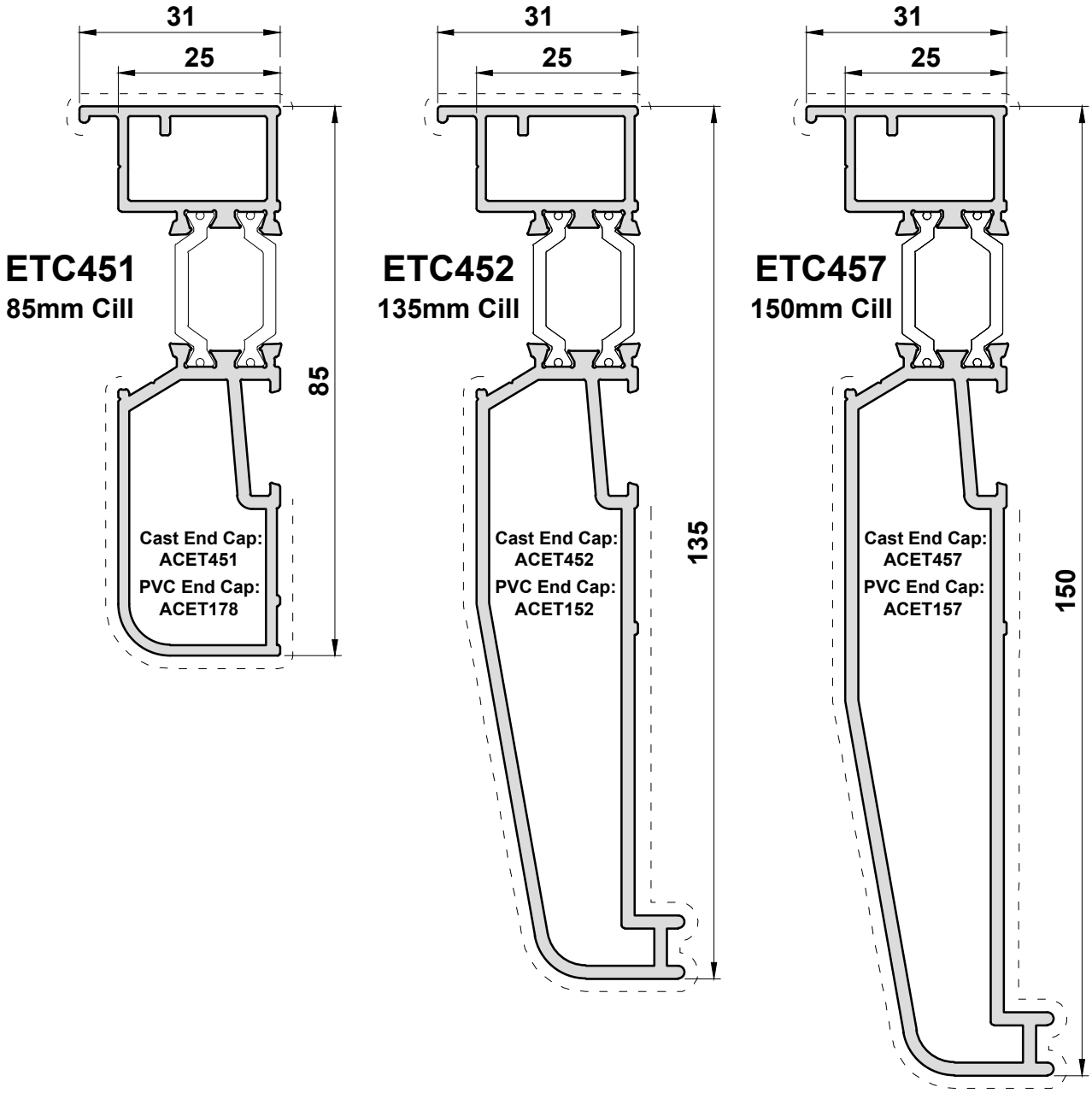

Scale 1:1

Primary Visible Side — — — — — — — — — — — — — — — — — — Secondary Visible Side — · — · — · — · — · — · — · — · —

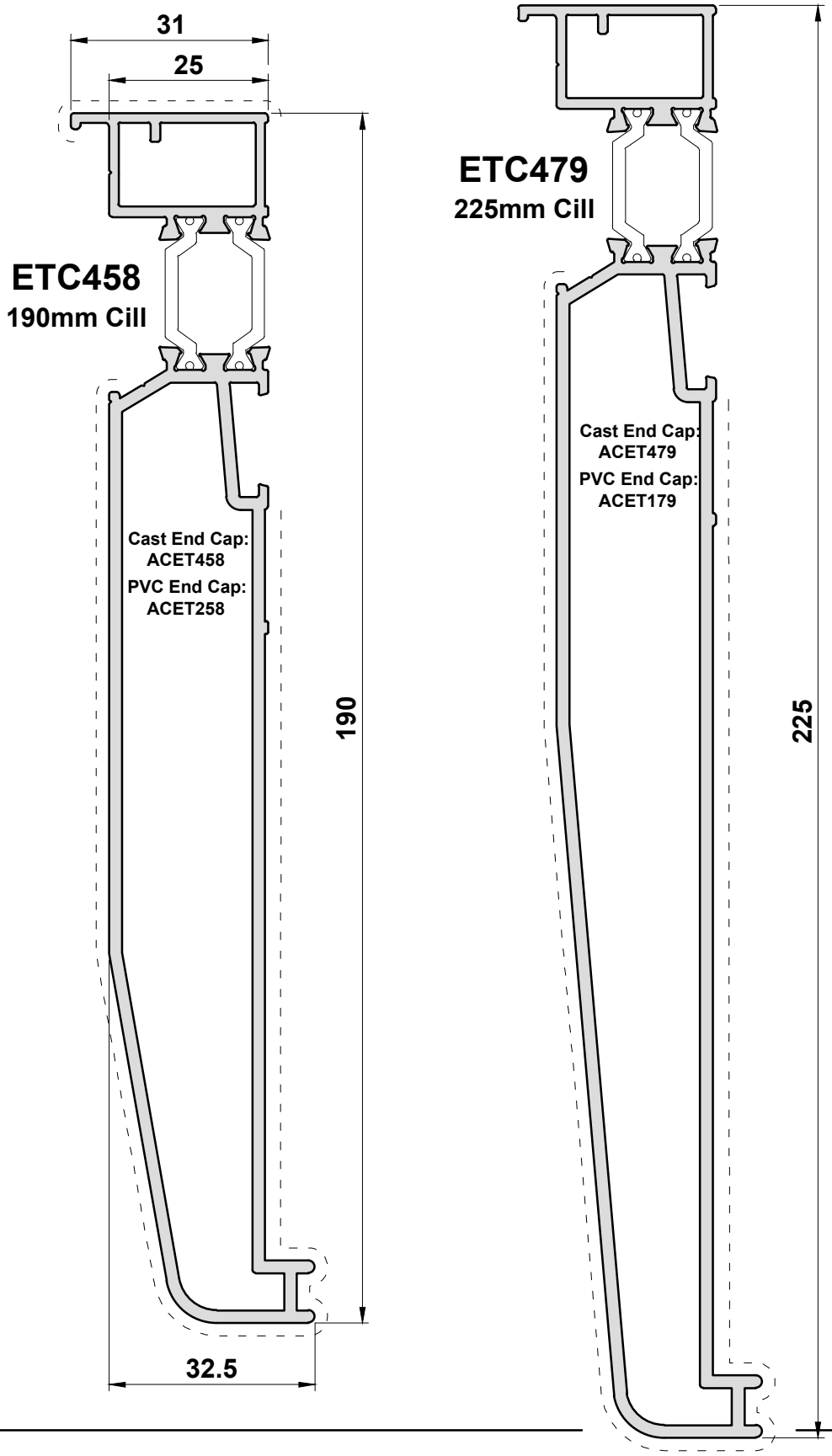

Scale 1:1

Section B

Accessories

Photos & Drawings

Image	Part Code	Pack	Unit	Application	Colour
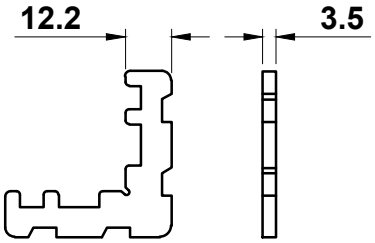	**ACEF911** **Crimping Cleat**	**24**	**pack**	**W20310** **W23011**	MF ✓ SA KL HP SSC SMC W Z PC
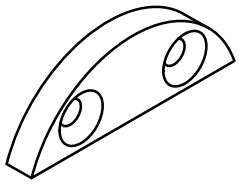	**ACET041** **Cill Nose Bracket**	**1**	**each**	**ETC451** **ETC452** **ETC457** **ETC458** **ETC479**	MF ✓ SA KL HP SSC SMC W Z PC
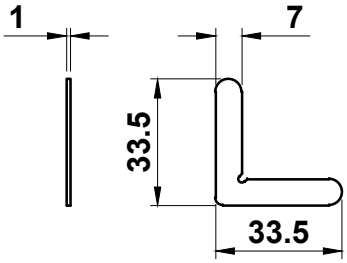	**ACET045** **Stainless Steel Chevron**	**100**	**pack**	**W20320**	MF ✓ SA KL HP SSC SMC W Z PC
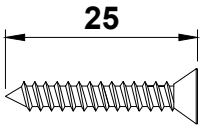	**ACET060** **No. 7 x 25 S/S Self Tapping CSK Screw**	**100**	**pack**		MF ✓ SA KL HP SSC SMC W Z PC
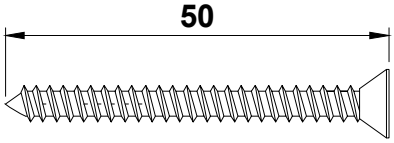	**ACET062** **No. 10 x 50 S/S Self Tapping CSK Screw**	**100**	**pack**		MF ✓ SA KL HP SSC SMC W Z PC

T-BARS
ACVG65=2.5mm
ACVG66=3.0mm
ACVL150=4.0mm

Screw (Grub)

MF = Mill Finish
SA = Silver Anodised
KL = Basic Colour
HP = Special Colour
SSC = Smooth Satin Chrome
SMC = Smokey Chrome
PC = Polished Chrome
W = White
Z = Black

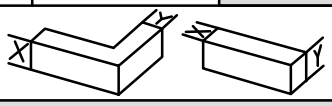

Image	Part Code	Pack	Unit	Application	Colour	
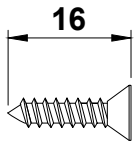	**ACET064** **No. 8 x 16 S/S Self Tapping CSK Screw**	**100**	**pack**		MF	✓
					SA	
					KL	
					HP	
					SSC	
					SMC	
					W	
					Z	
					PC	
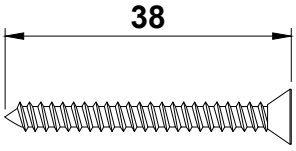	**ACET066** **No. 7 x 38 S/S Self Tapping CSK Screw**	**100**	**pack**		MF	✓
					SA	
					KL	
					HP	
					SSC	
					SMC	
					W	
					Z	
					PC	
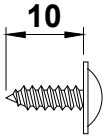	**ACET068** **No. 8 x 10 S/S Self Tapping Flange Screw**	**100**	**pack**	**Friction Hinges**	MF	✓
					SA	
					KL	
					HP	
					SSC	
					SMC	
					W	
					Z	
					PC	
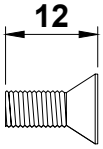	**ACET069** **M5 x 12 S/S CSK Machine Screw**	**100**	**pack**	**ACET165**	MF	✓
					SA	
					KL	
					HP	
					SSC	
					SMC	
					W	
					Z	
					PC	
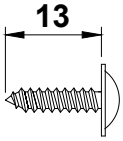	**ACET070** **No. 8 x 13 S/S Self Tapping Flange Screw**	**100**	**pack**		MF	✓
					SA	
					KL	
					HP	
					SSC	
					SMC	
					W	
					Z	
					PC	

T-BARS
ACVG65=2.5mm
ACVG66=3.0mm
ACVL150=4.0mm

Screw (Grub)

MF = Mill Finish
SA = Silver Anodised
KL = Basic Colour
HP = Special Colour
SSC = Smooth Satin Chrome
SMC = Smokey Chrome
PC = Polished Chrome
W = White
Z = Black

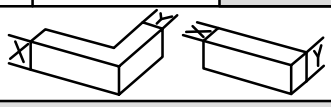

Image	Part Code	Pack	Unit	Application	Colour	
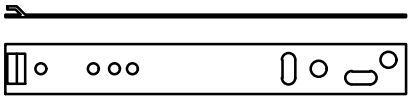	**ACET130** **Fixing Strap**	1	100		MF	
					SA	
					KL	
					HP	
					SSC	
					SMC	
					W	
					Z	
					PC	
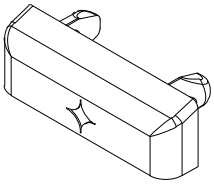	**ACET131** **Drainage Cap** **for colour match drainage cap - see ACET431**	100	pack		MF	
					SA	
					KL	
					HP	
					SSC	
					SMC	
					W	✓
					Z	✓
					PC	
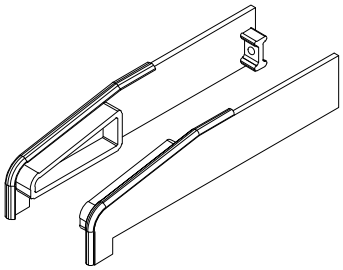	**ACET152** **PVC Cill End Caps**	10	pair	ETC452	MF	
					SA	
					KL	
					HP	
					SSC	
					SMC	
					W	✓
					Z	✓
					PC	
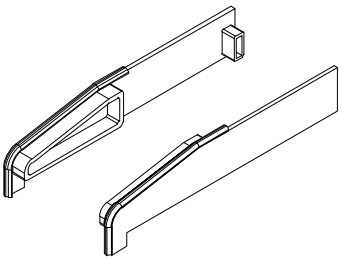	**ACET157** **PVC Cill End Caps**	10	pair	ETC457	MF	
					SA	
					KL	
					HP	
					SSC	
					SMC	
					W	✓
					Z	✓
					PC	
	ACET160r **Flipper Gasket**	100	m		MF	
					SA	
					KL	
					HP	
					SSC	
					SMC	
					W	
					Z	✓
					PC	

T-BARS
ACVG65=2.5mm
ACVG66=3.0mm
ACVL150=4.0mm

Screw (Grub)

MF = Mill Finish
SA = Silver Anodised
KL = Basic Colour
HP = Special Colour
SSC = Smooth Satin Chrome
SMC = Smokey Chrome
PC = Polished Chrome
W = White
Z = Black

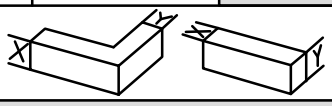

Image	Part Code	Pack	Unit	Application	Colour	
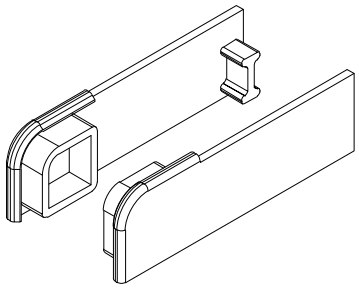	**ACET178** **PVC Cill End Caps**	**10**	**pair**	**ETC451**	MF	
					SA	
					KL	
					HP	
					SSC	
					SMC	
					W	✓
					Z	✓
					PC	
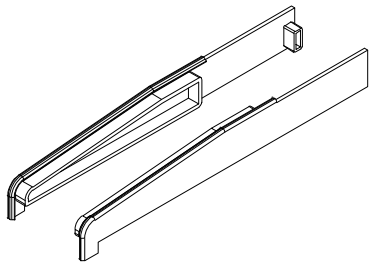	**ACET179** **PVC Cill End Caps**	**10**	**pair**	**ETC479**	MF	
					SA	
					KL	
					HP	
					SSC	
					SMC	
					W	✓
					Z	✓
					PC	
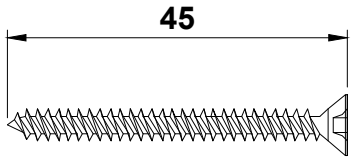	**ACET190** **4.3 x 45mm CSK Polyamide Screw**	**1000**	**Pack**		MF	
					SA	
					KL	
					HP	
					SSC	
					SMC	
					W	
					Z	✓
					PC	
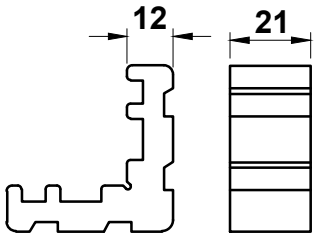	**ACET211** **Corner Cleat**	**24**	**pack**	**W20317**	MF	✓
					SA	
					KL	
					HP	
					SSC	
					SMC	
					W	
					Z	
					PC	
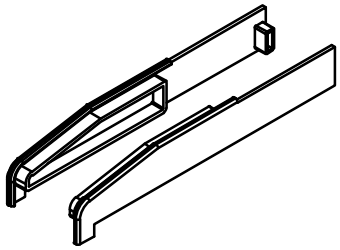	**ACET258** **PVC Cill End Cap**	**10**	**pair**	**ETC458**	MF	
					SA	
					KL	
					HP	
					SSC	
					SMC	
					W	✓
					Z	✓
					PC	

T-BARS
ACVG65=2.5mm
ACVG66=3.0mm
ACVL150=4.0mm

Screw (Grub)

MF = Mill Finish
SA = Silver Anodised
KL = Basic Colour
HP = Special Colour
SSC = Smooth Satin Chrome
SMC = Smokey Chrome
PC = Polished Chrome
W = White
Z = Black

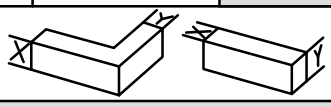

Image	Part Code	Pack	Unit	Application	Colour	
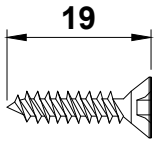	**ACET290** **4.3 x 19mm CSK Polyamide Screw**	**1000**	**Pack**		MF	
					SA	
					KL	
					HP	
					SSC	
					SMC	
					W	
					Z	✓
					PC	
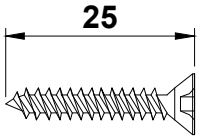	**ACET390** **4.3 x 25mm CSK Polyamide Screw**	**200**	**Pack**		MF	
					SA	
					KL	
					HP	
					SSC	
					SMC	
					W	
					Z	✓
					PC	
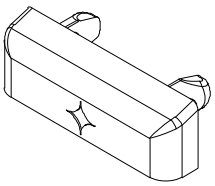	**ACET431** **Colour Match Drainage Cover Cap**	**8**	**pack**		MF	
					SA	
					KL	✓
					HP	✓
					SSC	
					SMC	
					W	✓
					Z	✓
					PC	
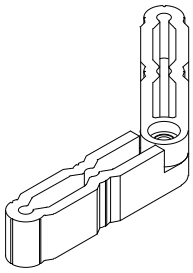	**ACET440** **90° - 180° Variable Angle Cill / Bracket**	**10**	**pack**	**ETC451** **ETC452** **ETC457** **ETC458** **ETC479**	MF	
					SA	✓
					KL	
					HP	
					SSC	
					SMC	
					W	
					Z	
					PC	
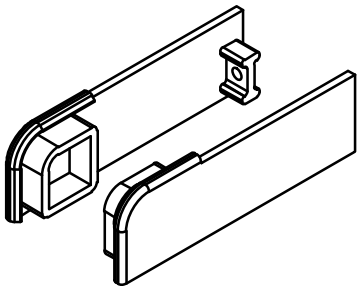	**ACET451** **Cast Cill End Caps**	**1**	**pair**	**ETC451**	MF	✓
					SA	
					KL	✓
					HP	✓
					SSC	
					SMC	
					W	✓
					Z	✓
					PC	

T-BARS
ACVG65=2.5mm
ACVG66=3.0mm
ACVL150=4.0mm

Screw (Grub)

MF = Mill Finish
SA = Silver Anodised
KL = Basic Colour
HP = Special Colour
SSC = Smooth Satin Chrome
SMC = Smokey Chrome
PC = Polished Chrome
W = White
Z = Black

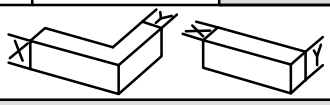

Image	Part Code	Pack	Unit	Application	Colour	
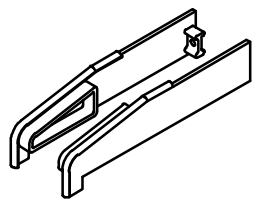	**ACET452** **Cast Cill End Caps**	**1**	**Pair**	**ETC452**	MF	✓
					SA	
					KL	✓
					HP	✓
					SSC	
					SMC	
					W	✓
					Z	✓
					PC	
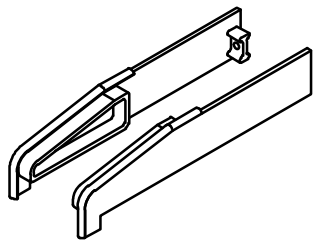	**ACET457** **Cast Cill End Caps**	**1**	**Pair**	**ETC457**	MF	✓
					SA	
					KL	✓
					HP	✓
					SSC	
					SMC	
					W	✓
					Z	✓
					PC	
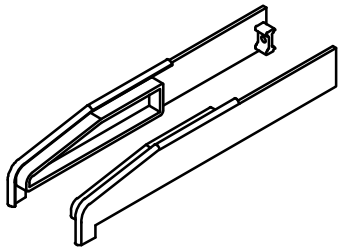	**ACET458** **Cast Cill End Caps**	**1**	**Pair**	**ETC458**	MF	
					SA	
					KL	✓
					HP	✓
					SSC	
					SMC	
					W	✓
					Z	✓
					PC	
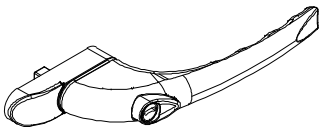	**ACET460** **Inline Espagnolette Handle 9mm Spindle**	**1**	**Each**		MF	
					SA	
					KL	✓
					HP	✓
					SSC	✓
					SMC	✓
					W	✓
					Z	✓
					PC	✓
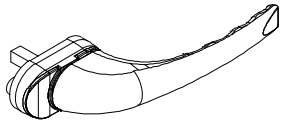	**ACET464** **Non-Locking Tilt & Turn Handle**	**1**	**Each**		MF	
					SA	
					KL	
					HP	
					SSC	
					SMC	
					W	
					Z	
					PC	

T-BARS
ACVG65=2.5mm
ACVG66=3.0mm
ACVL150=4.0mm

Screw (Grub)

MF = Mill Finish
SA = Silver Anodised
KL = Basic Colour
HP = Special Colour
SSC = Smooth Satin Chrome
SMC = Smokey Chrome
PC = Polished Chrome
W = White
Z = Black

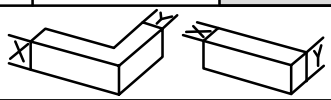

Image	Part Code	Pack	Unit	Application	Colour	
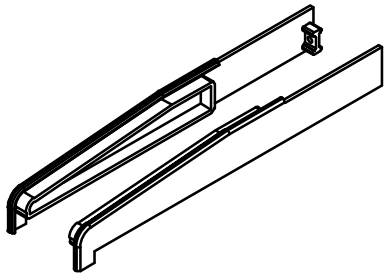	**ACET479** Cast Cill End Caps	1	Pair	ETC479	MF	✓
					SA	
					KL	✓
					HP	✓
					SSC	
					SMC	
					W	✓
					Z	✓
					PC	
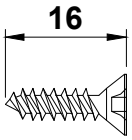	**ACET490** 4.3 x 16mm CSK Polyamide Screw	1000	Pack		MF	
					SA	
					KL	
					HP	
					SSC	
					SMC	
					W	
					Z	✓
					PC	
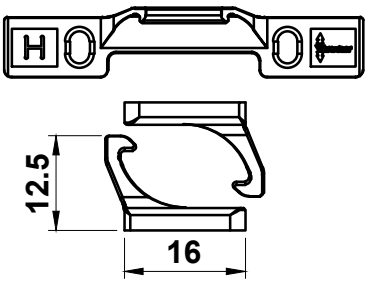	**ACET516** 16mm Cavity Hinge Protector 4 Per Set (2 pairs)	50	sets		MF	
					SA	
					KL	
					HP	
					SSC	
					SMC	
					W	
					Z	
					PC	
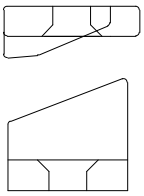	**ACET652** Pull-In Blocks	50	pack		MF	
					SA	
					KL	
					HP	
					SSC	
					SMC	
					W	
					Z	
					PC	
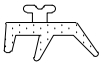	**ACET835** 4mm External Low Line Captive Bead Gasket	200	m		MF	
					SA	
					KL	
					HP	
					SSC	
					SMC	
					W	
					Z	✓
					PC	

T-BARS
ACVG65=2.5mm
ACVG66=3.0mm
ACVL150=4.0mm

Screw (Grub)

MF	= Mill Finish	W	= White
SA	= Silver Anodised	Z	= Black
KL	= Basic Colour		
HP	= Special Colour		
SSC	= Smooth Satin Chrome		
SMC	= Smokey Chrome		
PC	= Polished Chrome		

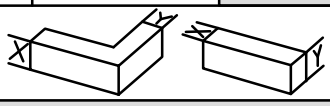

Image	Part Code	Pack	Unit	Application	Colour	
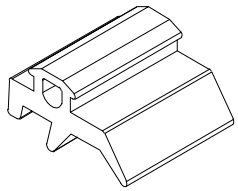	**ACET842** **3mm Low Line External Gasket**	**200**	**m**		MF	
					SA	
					KL	
					HP	
					SSC	
					SMC	
					W	
					Z	✓
					PC	
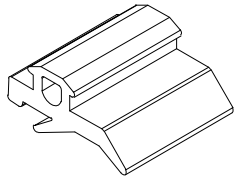	**ACET843** **2mm Low Line External Gasket**	**200**	**m**		MF	✓
					SA	
					KL	
					HP	
					SSC	
					SMC	
					W	
					Z	
					PC	
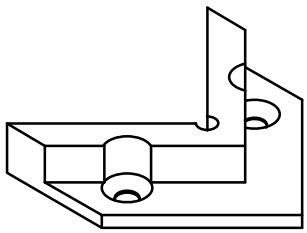	**ACET975** **Vee Block Packer**	**1**	**Each**	**W20320**	MF	
					SA	
					KL	
					HP	
					SSC	
					SMC	
					W	
					Z	
					PC	
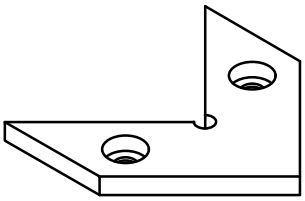	**ACET978** **Punch Tool**	**1**	**Each**	**W20317**	MF	
					SA	
					KL	
					HP	
					SSC	
					SMC	
					W	
					Z	
					PC	
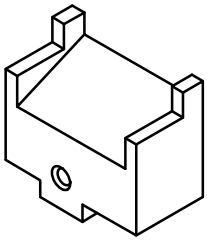	**ACET979** **Vee Block**	**1**	**Each**	**W20310** **W20317**	MF	
					SA	
					KL	
					HP	
					SSC	
					SMC	
					W	
					Z	
					PC	

T-BARS
ACVG65=2.5mm
ACVG66=3.0mm
ACVL150=4.0mm

Screw (Grub)

MF = Mill Finish
SA = Silver Anodised
KL = Basic Colour
HP = Special Colour
SSC = Smooth Satin Chrome
SMC = Smokey Chrome
PC = Polished Chrome
W = White
Z = Black

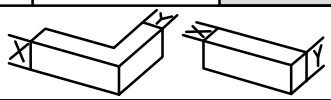

Image	Part Code	Pack	Unit	Application	Colour	
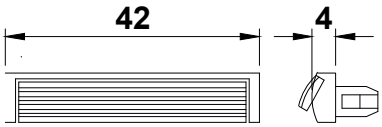	**ACGSL045** **Drainage Cap**	**100**	**pack**		MF	
					SA	
					KL	
					HP	
					SSC	
					SMC	
					W	✓
					Z	✓
					PC	
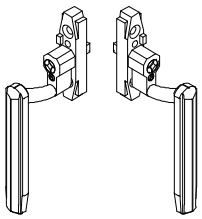	**ACSM002 L/R** **Art Deco Window Handles**	**1**	**each**		MF	
					SA	
					KL	✓
					HP	
					SSC	
					SMC	
					W	✓
					Z	✓
					PC	
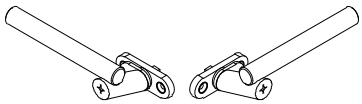	**ACSM010 L/R** **Stainless Steel Casement Window Handle**	**1**	**each**		MF	
					SA	
					KL	
					HP	
					SSC	
					SMC	
					W	
					Z	
					PC	
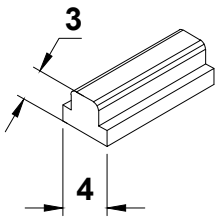	**ACRV032** **Sealing Gasket for Coupler**	**50**	**m**	**W20351** **W20354** **W20386** **W20387**	MF	
					SA	
					KL	
					HP	
					SSC	
					SMC	
					W	
					Z	✓
					PC	
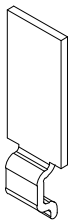	**ACUL025** **Anti-Twist Clip**	**100**	**pack**	**W20330** **W20331** **W20332** **W20333**	MF	
					SA	
					KL	
					HP	
					SSC	
					SMC	
					W	
					Z	
					PC	

T-BARS
ACVG65=2.5mm
ACVG66=3.0mm
ACVL150=4.0mm

Screw (Grub)

MF = Mill Finish
SA = Silver Anodised
KL = Basic Colour
HP = Special Colour
SSC = Smooth Satin Chrome
SMC = Smokey Chrome
PC = Polished Chrome
W = White
Z = Black

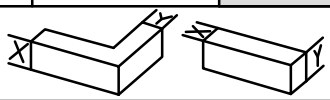

Image	Part Code	Pack	Unit	Application	Colour	
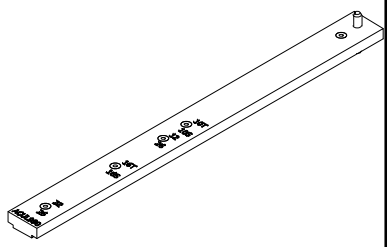	**ACUL990** **Friction Hinge Drill Jig**	**1**	**Each**		MF	
					SA	
					KL	
					HP	
					SSC	
					SMC	
					W	
					Z	
					PC	
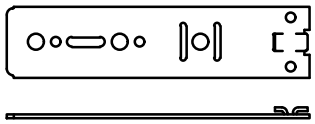	**ACUN230** **160mm Fixing Lug**	**100**	**pack**		MF	✓
					SA	
					KL	
					HP	
					SSC	
					SMC	
					W	
					Z	
					PC	
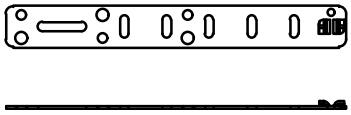	**ACUN232** **240mm Fixing Lug**	**100**	**pack**		MF	✓
					SA	
					KL	
					HP	
					SSC	
					SMC	
					W	
					Z	
					PC	
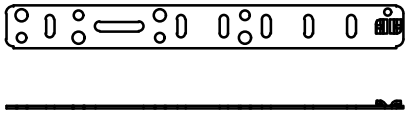	**ACUN233** **280mm Fixing Lug**	**100**	**pack**		MF	✓
					SA	
					KL	
					HP	
					SSC	
					SMC	
					W	
					Z	
					PC	
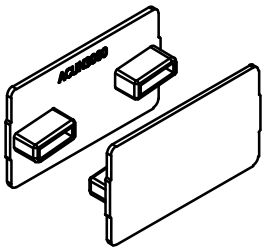	**ACUN3000** **End Cap for UN3000**	**10**	**Pairs**	**UN3000**	MF	
					SA	
					KL	
					HP	
					SSC	
					SMC	
					W	✓
					Z	✓
					PC	

T-BARS
ACVG65=2.5mm
ACVG66=3.0mm
ACVL150=4.0mm

Screw (Grub)

MF = Mill Finish
SA = Silver Anodised
KL = Basic Colour
HP = Special Colour
SSC = Smooth Satin Chrome
SMC = Smokey Chrome
PC = Polished Chrome
W = White
Z = Black

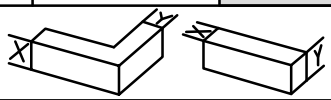

Image	Part Code	Pack	Unit	Application	Colour	
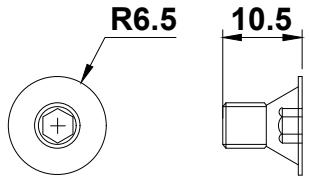	**ACUN3503** **M6 x 10mm CSK SKT Screw**				MF	✓
					SA	
					KL	
					HP	
					SSC	
					SMC	
					W	
					Z	
					PC	
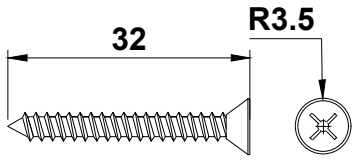	**ACUN3512** **No. 8 x 32mm CSK SS Pozi Screw**	**100**	**pack**		MF	
					SA	
					KL	
					HP	
					SSC	
					SMC	
					W	
					Z	
					PC	
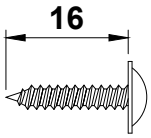	**ACUN3535** **No. 8 x 16 S/S Self Tapping Flange Screw**	**100**	**pack**		MF	✓
					SA	
					KL	
					HP	
					SSC	
					SMC	
					W	
					Z	
					PC	
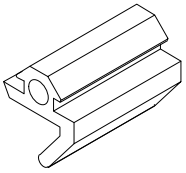	**ACVL032** **EPDM Flipper Gasket**	**100**	**m**		MF	
					SA	
					KL	
					HP	
					SSC	
					SMC	
					W	
					Z	✓
					PC	
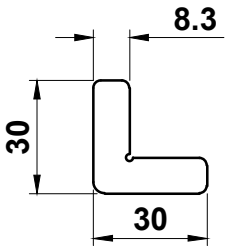	**ACW20024** **Stainless Steel Chevron**	**100**	**pack**	**W20310**	MF	
					SA	
					KL	
					HP	
					SSC	
					SMC	
					W	✓
					Z	
					PC	

T-BARS
ACVG65=2.5mm
ACVG66=3.0mm
ACVL150=4.0mm

Screw (Grub)

MF = Mill Finish
SA = Silver Anodised
KL = Basic Colour
HP = Special Colour
SSC = Smooth Satin Chrome
SMC = Smokey Chrome
PC = Polished Chrome
W = White
Z = Black

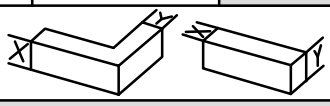

Image	Part Code	Pack	Unit	Application	Colour
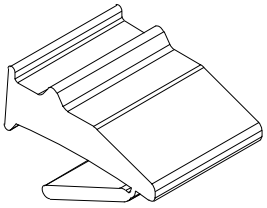	**ACW20038** **4-3mm Tear-away Low-line EPDM Wedge Gasket**	**200**	**m**		MF SA KL HP SSC SMC W Z PC
	ACW20100 L/R **Monkey Tail Espag Handle** **Black or Pewter**	**1**	**each**	**ACW201** **ACW202** **ACW203** **ACW204** **ACW205**	MF SA KL HP SSC SMC W Z PC
	ACW20101 L/R **Bulb End Espag Handle** **Black or Pewter**	**1**	**each**	**ACW201** **ACW202** **ACW203** **ACW204** **ACW205**	MF SA KL HP SSC SMC W Z PC
	ACW20102 **8" Monkey Tail Peg Stay** **Black or Pewter**	**1**	**each**		MF SA KL HP SSC SMC W Z PC
	ACW20103 **10" Monkey Tail Peg Stay** **Black or Pewter**	**1**	**each**		MF SA KL HP SSC SMC W Z PC

T-BARS
ACVG65=2.5mm
ACVG66=3.0mm
ACVL150=4.0mm

Screw (Grub)

MF = Mill Finish
SA = Silver Anodised
KL = Basic Colour
HP = Special Colour
SSC = Smooth Satin Chrome
SMC = Smokey Chrome
PC = Polished Chrome
W = White
Z = Black

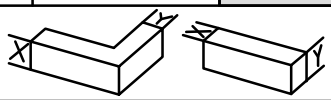

Image	Part Code	Pack	Unit	Application	Colour
	ACW20104 **12" Monkey Tail Peg Stay** **Black or Pewter**	**1**	**each**		MF SA KL HP SSC SMC W Z PC
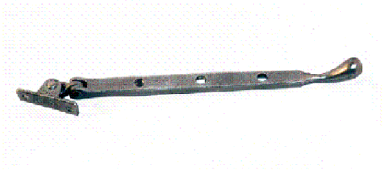	**ACW20105** **8" Bulb End Peg Stay** **Black or Pewter**	**1**	**each**		MF SA KL HP SSC SMC W Z PC
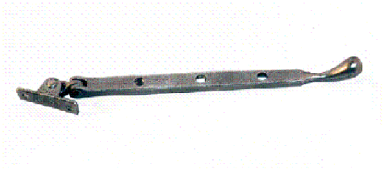	**ACW20106** **10" Bulb End Peg Stay** **Black or Pewter**	**1**	**each**		MF SA KL HP SSC SMC W Z PC
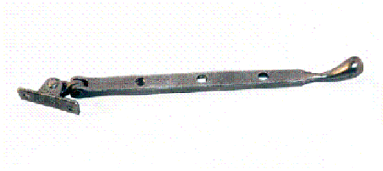	**ACW20107** **12" Bulb End Peg Stay** **Black or Pewter**	**1**	**each**		MF SA KL HP SSC SMC W Z PC
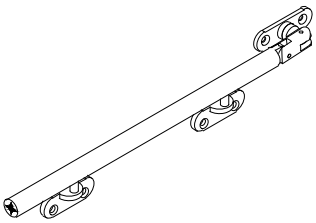	**ACW20108** **Stainless Steel Peg Stay**	**1**	**each**		MF SA KL HP SSC SMC W Z PC

T-BARS
ACVG65=2.5mm
ACVG66=3.0mm
ACVL150=4.0mm

Screw (Grub)

MF = Mill Finish
SA = Silver Anodised
KL = Basic Colour
HP = Special Colour
SSC = Smooth Satin Chrome
SMC = Smokey Chrome
PC = Polished Chrome
W = White
Z = Black

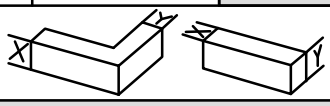

Image	Part Code	Pack	Unit	Application	Colour	
	ACW20165 L/R **Art Deco Espag Handle** **Antique Brass & Satin Nickle Plate**	**1**	**each**		MF	
					SA	
					KL	
					HP	
					SSC	
					SMC	
					W	
					Z	
					PC	
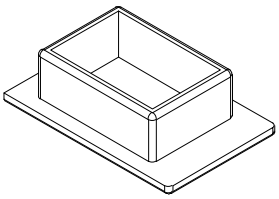	**ACW20239** **End Cap for W20332 & W20333**	**20**	**pack**	**W20332** **W20333**	MF	
					SA	
					KL	
					HP	
					SSC	
					SMC	
					W	✓
					Z	✓
					PC	
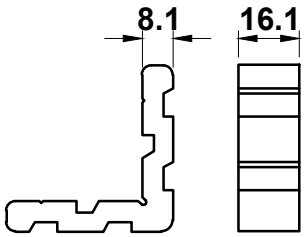	**ACW20310** **Crimping Cleat**	**24**	**pack**	**W20310** **W23017**	MF	
					SA	
					KL	
					HP	
					SSC	
					SMC	
					W	
					Z	
					PC	
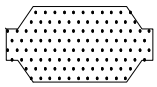	**ACW20315** **Infill Foam for W20310 & W20317**	**1**	**each**	**W20310** **W20317**	MF	
					SA	
					KL	
					HP	
					SSC	
					SMC	
					W	
					Z	
					PC	
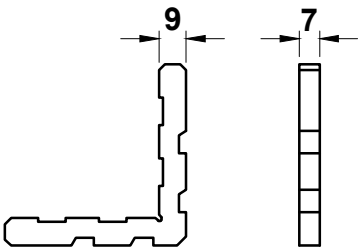	**ACW20320** **Extended Sash Cleat**	**1**	**each**	**W20320** **W23045**	MF	
					SA	
					KL	
					HP	
					SSC	
					SMC	
					W	
					Z	
					PC	

T-BARS
ACVG65=2.5mm
ACVG66=3.0mm
ACVL150=4.0mm

Screw (Grub)

MF = Mill Finish
SA = Silver Anodised
KL = Basic Colour
HP = Special Colour
SSC = Smooth Satin Chrome
SMC = Smokey Chrome
PC = Polished Chrome
W = White
Z = Black

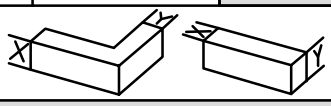

Image	Part Code	Pack	Unit	Application	Colour
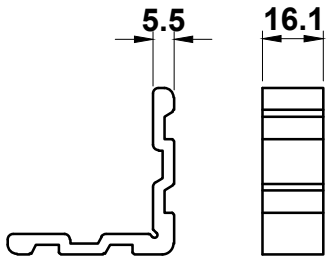	**ACW20321** **Extended Sash Cleat**	**24**	**pack**	**W20320**	MF SA KL HP SSC SMC W Z PC
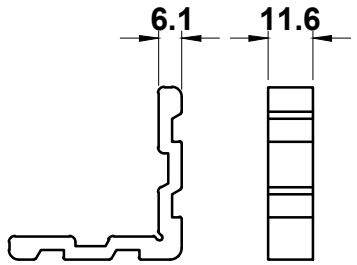	**ACW20322** **Crimping Cleat**	**24**	**pack**	**W20345**	MF SA KL HP SSC SMC W Z PC
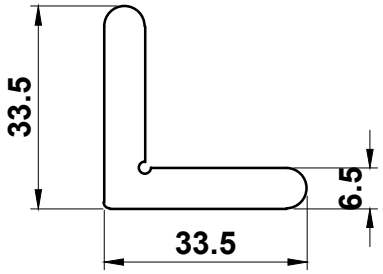	**ACW20324** **Stainless Steel Chevron**	**100**	**pack**	**W20320** **W20345**	MF SA KL HP SSC SMC W Z PC
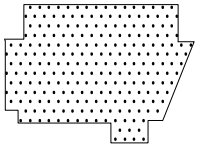	**ACW20325** **Infill Foam for W20325**	**1**	**each**	**W20325**	MF SA KL HP SSC SMC W Z PC
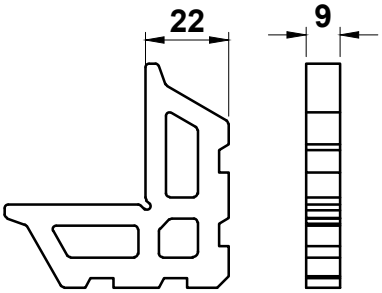	**ACW20326** **Crimping Cleat**	**24**	**pack**	**W20325**	MF SA KL HP SSC SMC W Z PC

T-BARS
ACVG65=2.5mm
ACVG66=3.0mm
ACVL150=4.0mm

Screw (Grub)

MF = Mill Finish
SA = Silver Anodised
KL = Basic Colour
HP = Special Colour
SSC = Smooth Satin Chrome
SMC = Smokey Chrome
PC = Polished Chrome
W = White
Z = Black

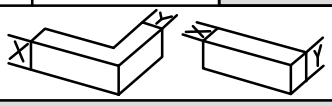

Image	Part Code	Pack	Unit	Application	Colour
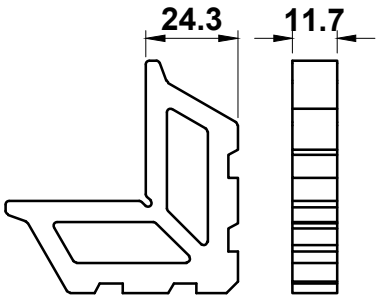	**ACW20327** **Crimping Cleat**	**24**	**pack**	**W20325**	MF SA KL HP SSC SMC W Z PC
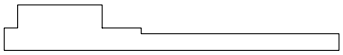	**ACW20330** **End Packer for W20330**	**50**	**Pack**	**W20330**	MF SA KL HP SSC SMC W Z PC
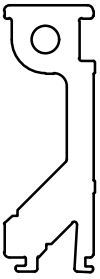	**ACW20331** **Cruciform Bracket**	**10**	**Pack**	**W20331** **W20333**	MF SA KL HP SSC SMC W Z PC
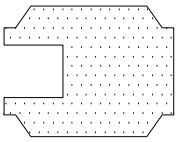	**ACW20332** **Infill Foam for W20330 & W20332**	**1**	**each**	**W20330** **W20332**	MF SA KL HP SSC SMC W Z PC
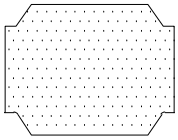	**ACW20333** **Infill Foam for W20331 & W20333**	**1**	**each**	**W20330** **W20333**	MF SA KL HP SSC SMC W Z PC

T-BARS
ACVG65=2.5mm
ACVG66=3.0mm
ACVL150=4.0mm

Screw (Grub)

MF = Mill Finish
SA = Silver Anodised
KL = Basic Colour
HP = Special Colour
SSC = Smooth Satin Chrome
SMC = Smokey Chrome
PC = Polished Chrome
W = White
Z = Black

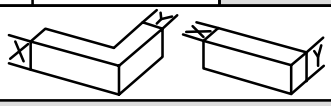

Image	Part Code	Pack	Unit	Application	Colour
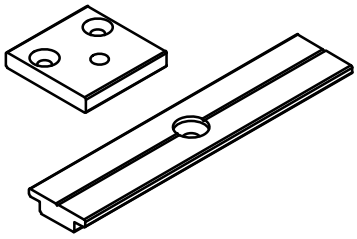	**ACW20344** **W20345 Fixing Kit**	**1**	**each**	**W20345**	MF SA KL HP SSC SMC W Z PC
	ACW20345 **Infill Foam for W20345**	**1**	**each**	**W20345**	MF SA KL HP SSC SMC W Z PC
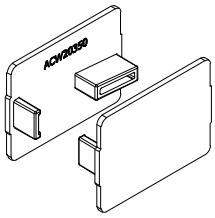	**ACW20350** **End Cap for W20350**	**10**	**Pairs**	**W20350**	MF SA KL HP SSC SMC W Z PC
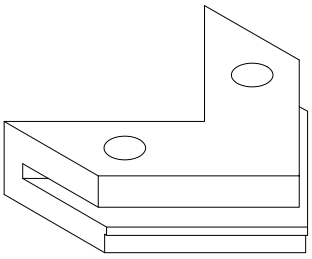	**ACW20390** **Vee Block Packer**	**1**	**Each**	**W20310** **W20317**	MF SA KL HP SSC SMC W Z PC
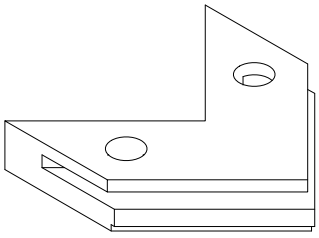	**ACW20393** **Vee Block Packer**	**1**	**Each**	**W20325**	MF SA KL HP SSC SMC W Z PC

T-BARS
ACVG65=2.5mm
ACVG66=3.0mm
ACVL150=4.0mm

Screw (Grub)

MF = Mill Finish
SA = Silver Anodised
KL = Basic Colour
HP = Special Colour
SSC = Smooth Satin Chrome
SMC = Smokey Chrome
PC = Polished Chrome
W = White
Z = Black

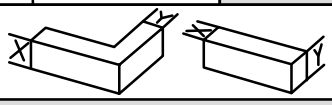

Image	Part Code	Pack	Unit	Application	Colour
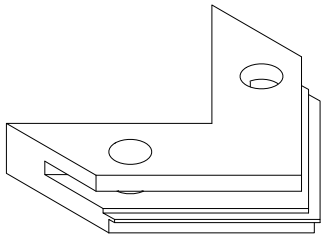	**ACW20394** **Vee Block Packer**	**1**	**Each**	**W20345**	MF SA KL HP SSC SMC W Z PC
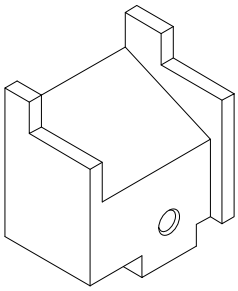	**ACW20395** **Punch Tool**	**1**	**Each**	**W20345**	MF SA KL HP SSC SMC W Z PC
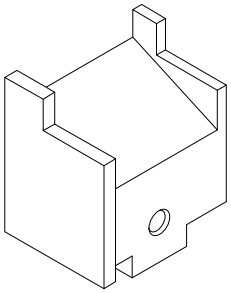	**ACW20396** **Punch Tool**	**1**	**Each**	**W20320** **W20325**	MF SA KL HP SSC SMC W Z PC
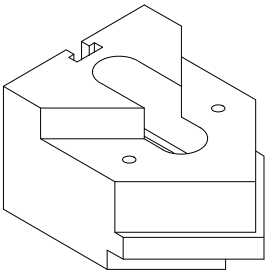	**ACW20397** **Vee Block**	**1**	**Each**	**W20310** **W20317**	MF SA KL HP SSC SMC W Z PC
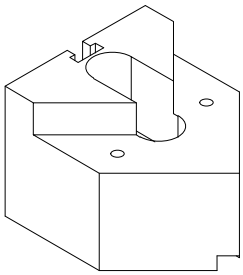	**ACW906** **Vee Block**	**1**	**Each**	**W20320** **W20325** **W20345**	MF SA KL HP SSC SMC W Z PC

T-BARS
ACVG65=2.5mm
ACVG66=3.0mm
ACVL150=4.0mm

Screw (Grub)

MF = Mill Finish
SA = Silver Anodised
KL = Basic Colour
HP = Special Colour
SSC = Smooth Satin Chrome
SMC = Smokey Chrome
PC = Polished Chrome
W = White
Z = Black

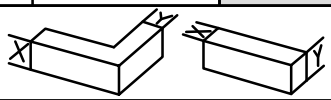

Image	Part Code	Pack	Unit	Application	Colour
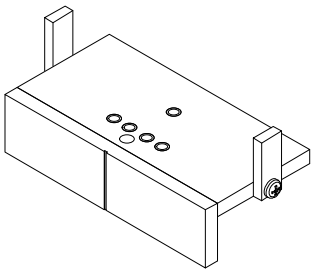	**ACW936** **Drilling Jig**	**1**	**Each**	**W20031** **W20331** **W20310**	MF SA KL HP SSC SMC W Z PC
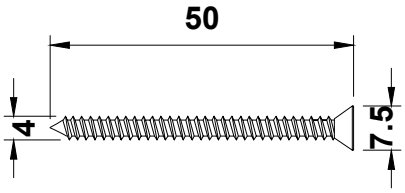	**MUA067SSZ** **No.7 x 50mm CS Pozi Self Tap**	**24**	**pack**		MF ✓ SA KL HP SSC SMC W Z PC
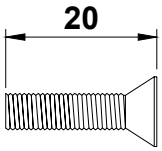	**WCA134** **Stainless M5 x 20mm Pozi Csk Machine Screw**	**100**	**pack**		MF ✓ SA KL HP SSC SMC W Z PC
					MF SA KL HP SSC SMC W Z PC
					MF SA KL HP SSC SMC W Z PC

T-BARS
ACVG65=2.5mm
ACVG66=3.0mm
ACVL150=4.0mm

Screw (Grub)

MF = Mill Finish
SA = Silver Anodised
KL = Basic Colour
HP = Special Colour
SSC = Smooth Satin Chrome
SMC = Smokey Chrome
PC = Polished Chrome
W = White
Z = Black

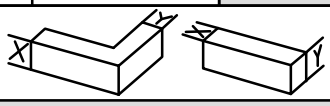

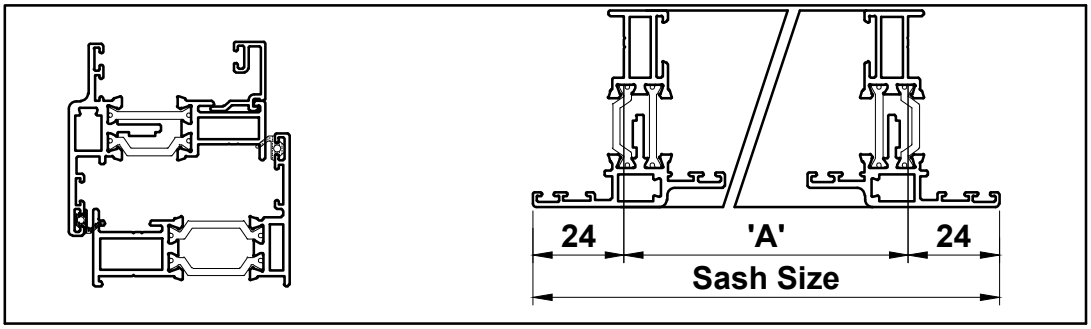

Part Code	Rod Length (mm)	Number of Keeps	Sash Rebate Size ('A')		Pack Size
			Minimum	Maximum	
ACW301L	335	2	340	505	20
ACW301R					
ACW302L	500	2	506	755	20
ACW302R					
ACW303L	750	2	756	1005	20
ACW303R					
ACW304L	1000	4	1006	1255	20
ACW304R					
ACW305L	1250	4	1256	1400	20
ACW305R					

Cam Locking Direction

Cam Locking Direction

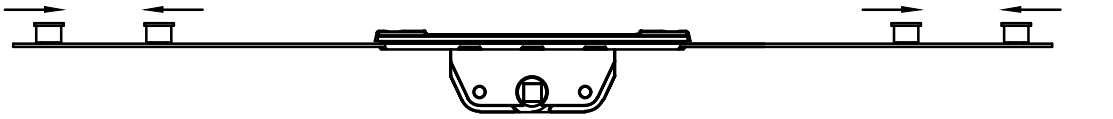

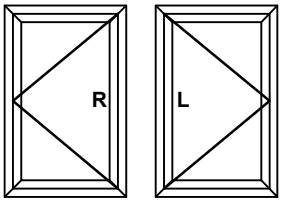

OUTSIDE VIEW

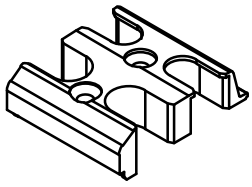

T-BARS
ACVG65=2.5mm
ACVG66=3.0mm
ACVL150=4.0mm

Screw (Grub)

MF	= Mill Finish	W	= White
SA	= Silver Anodised	Z	= Black
KL	= Basic Colour		
HP	= Special Colour		
SSC	= Smooth Satin Chrome		
SMC	= Smokey Chrome		
PC	= Polished Chrome		

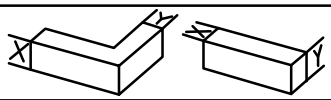

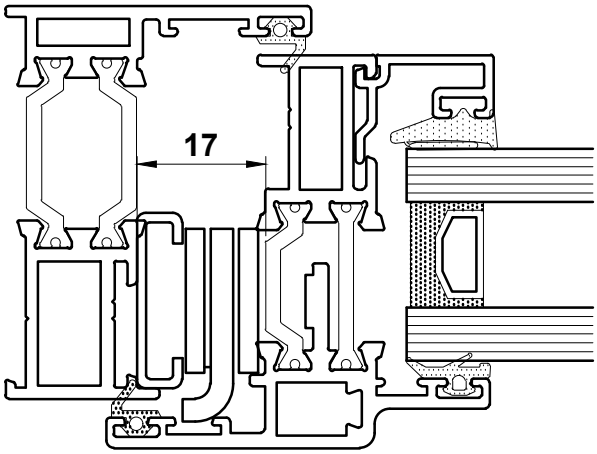

Hinge Code Top Hung	Hinge Length (mm)	Max Vent Weight (kg)	Min Vent Height (mm)	Max Vent Height (mm)	Opening Angle (+/-2.5°)
ACINS10	262	40	315	640	50
ACINS12	313	50	640	800	50
ACINS16	415	65	800	1100	50
ACINS22	567	100	1090	1500	45
ACINS22W	567	100	1500	2000	20
ACINS26	680	180	2000	2500	20
Side Hung	**Hinge Length (mm)**	**Max Vent Weight (kg)**	**Min Vent Width (mm)**	**Max Vent Width (mm)**	**Opening Angle (+/-2.5°)**
ACINSSH10	262	38	327	660	85
ACINSSH16	415	55	450	838	60

Please Note:

1. Dimensions shown in table are sash sizes - not rebate sizes.
2. The minimum sash sizes for ACINS10 & ACINSSH10 can both be reduced to 281mm where cockspur handles are used.
3. Top hung height & side hung width sizes to be reduced by 2mm where size is 450mm or smaller.
4. Vents of 100kg must be fitted with ACINS09 cam adjustment devices, which are optional on lighter vents
5. Separate restrictors (ACINS30 & ACINS31) vent holding devices may be required to hold large vents in a selected ventilation position against variable wind pressure.

T-BARS
ACVG65=2.5mm
ACVG66=3.0mm
ACVL150=4.0mm

Screw (Grub)

MF	= Mill Finish	W	= White
SA	= Silver Anodised	Z	= Black
KL	= Basic Colour		
HP	= Special Colour		
SSC	= Smooth Satin Chrome		
SMC	= Smokey Chrome		
PC	= Polished Chrome		

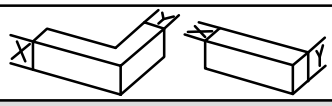

T-BARS
ACVG65=2.5mm
ACVG66=3.0mm
ACVL150=4.0mm

Screw (Grub)

MF	= Mill Finish	W	= White
SA	= Silver Anodised	Z	= Black
KL	= Basic Colour		
HP	= Special Colour		
SSC	= Smooth Satin Chrome		
SMC	= Smokey Chrome		
PC	= Polished Chrome		

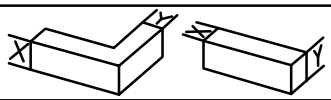

Image	Part Code	Pack	Unit	Application	Colour	
	ACMX09700 **Alu. Polish**	**1**	**each**		MF	✓
					SA	
					KL	
					HP	
					SSC	
					SMC	
					W	
					Z	
					PC	
	ACMX09761 **Maxi Gloss**	**1**	**each**		MF	
					SA	
					KL	
					HP	
					SSC	
					SMC	
					W	
					Z	
					PC	
	ACMX09762 **Alu. Bright**	**1**	**each**		MF	
					SA	
					KL	
					HP	
					SSC	
					SMC	
					W	
					Z	
					PC	
	ACMX09763 **Teflon Spray**	**1**	**each**		MF	
					SA	
					KL	
					HP	
					SSC	
					SMC	
					W	
					Z	
					PC	
	ACMX09764 **Maxi Clean**	**1**	**each**		MF	
					SA	
					KL	
					HP	
					SSC	
					SMC	
					W	
					Z	
					PC	

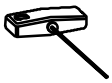

T-BARS
ACVG65=2.5mm
ACVG66=3.0mm
ACVL150=4.0mm

Screw (Grub)

MF = Mill Finish
SA = Silver Anodised
KL = Basic Colour
HP = Special Colour
SSC = Smooth Satin Chrome
SMC = Smokey Chrome
PC = Polished Chrome
W = White
Z = Black

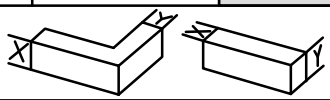

Image	Part Code	Pack	Unit	Application	Colour
	ACMX09765 **Alu. Cleaner**	**1**	**each**		MF SA KL HP SSC SMC W Z PC
	ACMX09770 **Roll & Wrap 100mm**	**1**	**each**		MF SA KL HP SSC SMC W Z PC
	ACMX09775 **Grip Handwrap**	**1**	**each**		MF SA KL HP SSC SMC W Z PC
	ACMX09801 **Protective Tape 50mm**	**1**	**each**		MF SA KL HP SSC SMC W Z PC
	ACMX09802 **Protective Tape 70mm**	**1**	**each**		MF SA KL HP SSC SMC W Z PC

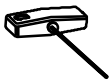

T-BARS
ACVG65=2.5mm
ACVG66=3.0mm
ACVL150=4.0mm

Screw (Grub)

MF = Mill Finish
SA = Silver Anodised
KL = Basic Colour
HP = Special Colour
SSC = Smooth Satin Chrome
SMC = Smokey Chrome
PC = Polished Chrome
W = White
Z = Black

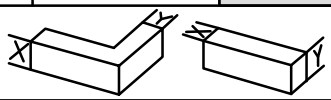

Image	Part Code	Pack	Unit	Application	Colour	
	ACMX09803 **Protective Tape 100mm**	**1**	**each**		MF	
					SA	
					KL	
					HP	
					SSC	
					SMC	
					W	
					Z	
					PC	
	ACSIL04 **Sealing Glue** **Order with suffix of KL colour (eg.ACSIL04KL005) or BL=Black/WP=White/ CL=Clear**	**1**	**each**		MF	
					SA	
					KL	✓
					HP	
					SSC	
					SMC	
					W	✓
					Z	✓
					PC	
	ACSIL05 **Rubber Sealant**	**1**	**each**		MF	
					SA	
					KL	
					HP	
					SSC	
					SMC	
					W	
					Z	
					PC	
	ACSIL08 **Silicon Gun**	**1**	**each**		MF	
					SA	
					KL	
					HP	
					SSC	
					SMC	
					W	
					Z	
					PC	
	ACSIL013 **Glue for Mitre**	**1**	**each**		MF	
					SA	
					KL	
					HP	
					SSC	
					SMC	
					W	
					Z	
					PC	

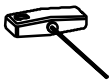

T-BARS
ACVG65=2.5mm
ACVG66=3.0mm
ACVL150=4.0mm

Screw (Grub)

MF = Mill Finish
SA = Silver Anodised
KL = Basic Colour
HP = Special Colour
SSC = Smooth Satin Chrome
SMC = Smokey Chrome
PC = Polished Chrome
W = White
Z = Black

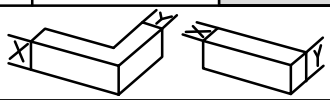

Image	Part Code	Pack	Unit	Application	Colour
	ACSIL014 **Anti-Corrosion Coating**	**1**	**each**		MF ✓ SA KL HP SSC SMC W Z PC
	ACUN3900 **Gasket Roller**	**1**	**each**		MF SA KL HP SSC SMC W Z PC
					MF SA KL HP SSC SMC W Z PC
					MF SA KL HP SSC SMC W Z PC
					MF SA KL HP SSC SMC W Z PC

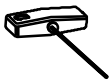

T-BARS
ACVG65=2.5mm
ACVG66=3.0mm
ACVL150=4.0mm

Screw (Grub)

MF = Mill Finish
SA = Silver Anodised
KL = Basic Colour
HP = Special Colour
SSC = Smooth Satin Chrome
SMC = Smokey Chrome
PC = Polished Chrome
W = White
Z = Black

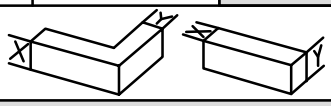

Section C

Sections

Scale Elevations

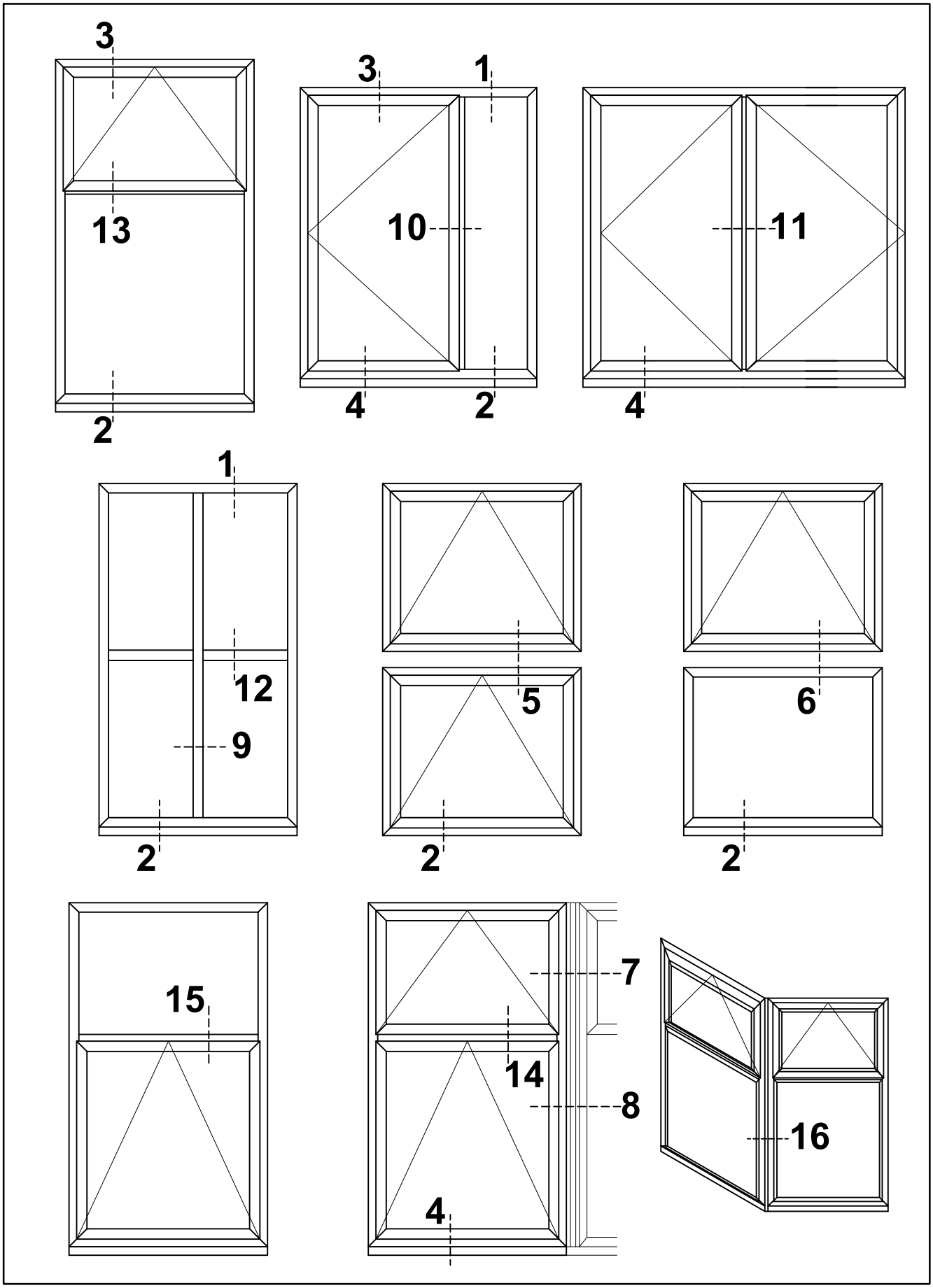

ISSUED : AUGUST 2020

Alitherm Heritage HD

Detail 1A

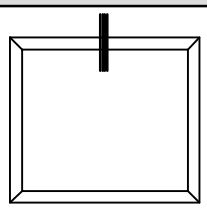

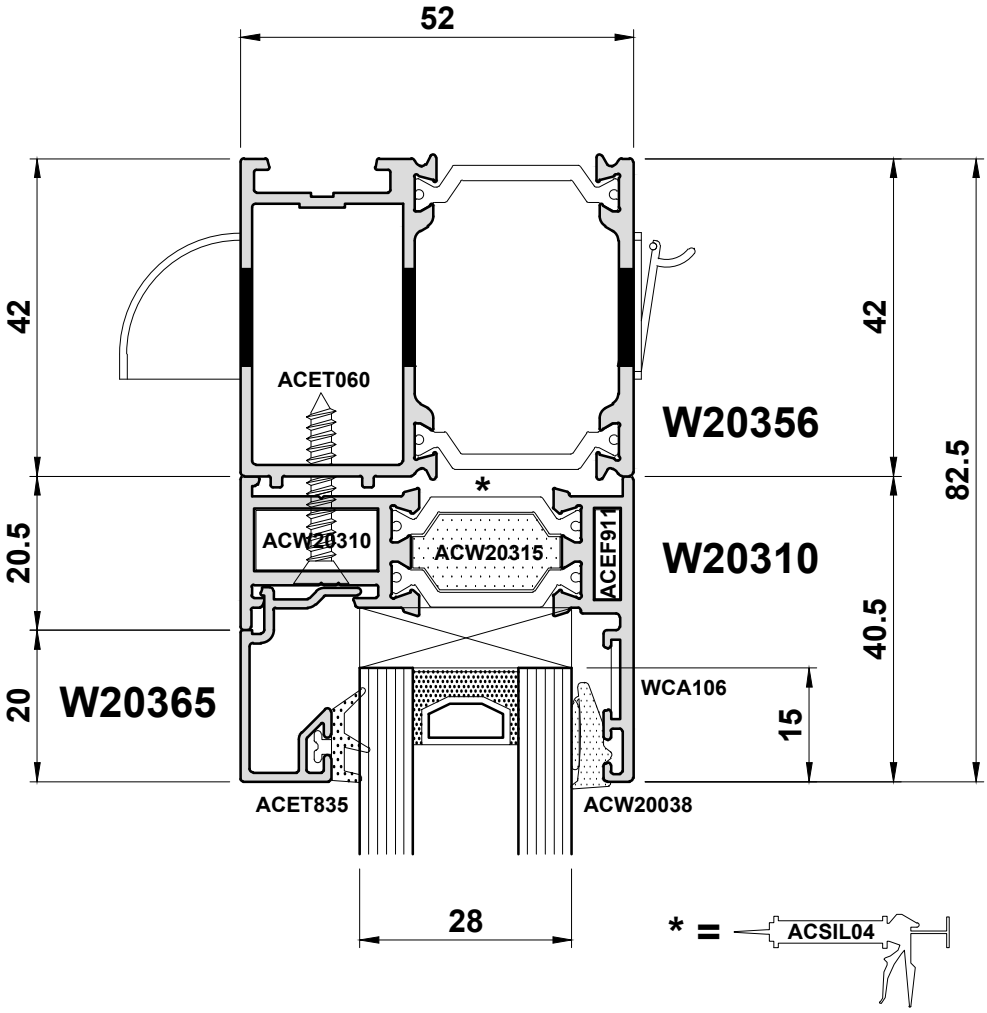

Do Not Scale From This Drawing

Detail 1B

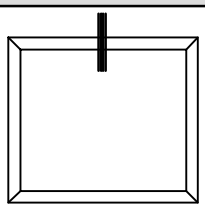

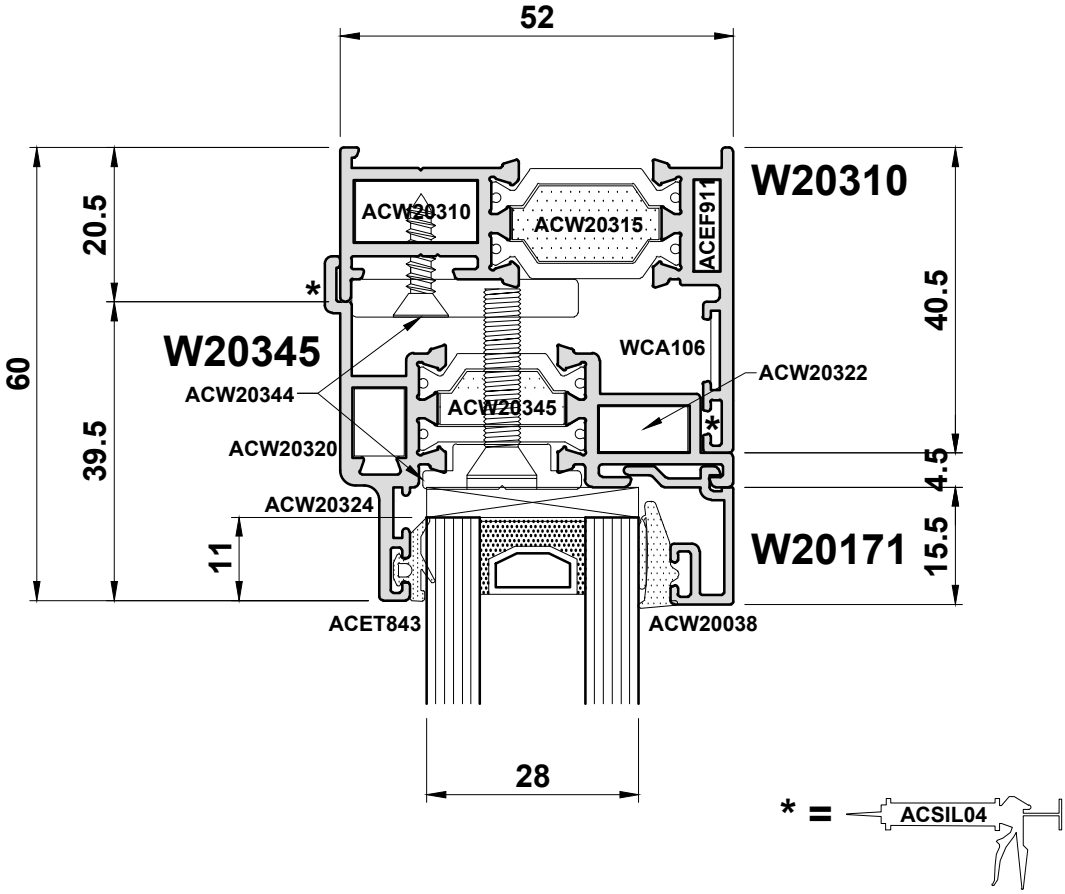

Do Not Scale From This Drawing

Alitherm Heritage HD

Detail 1C

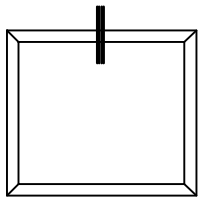

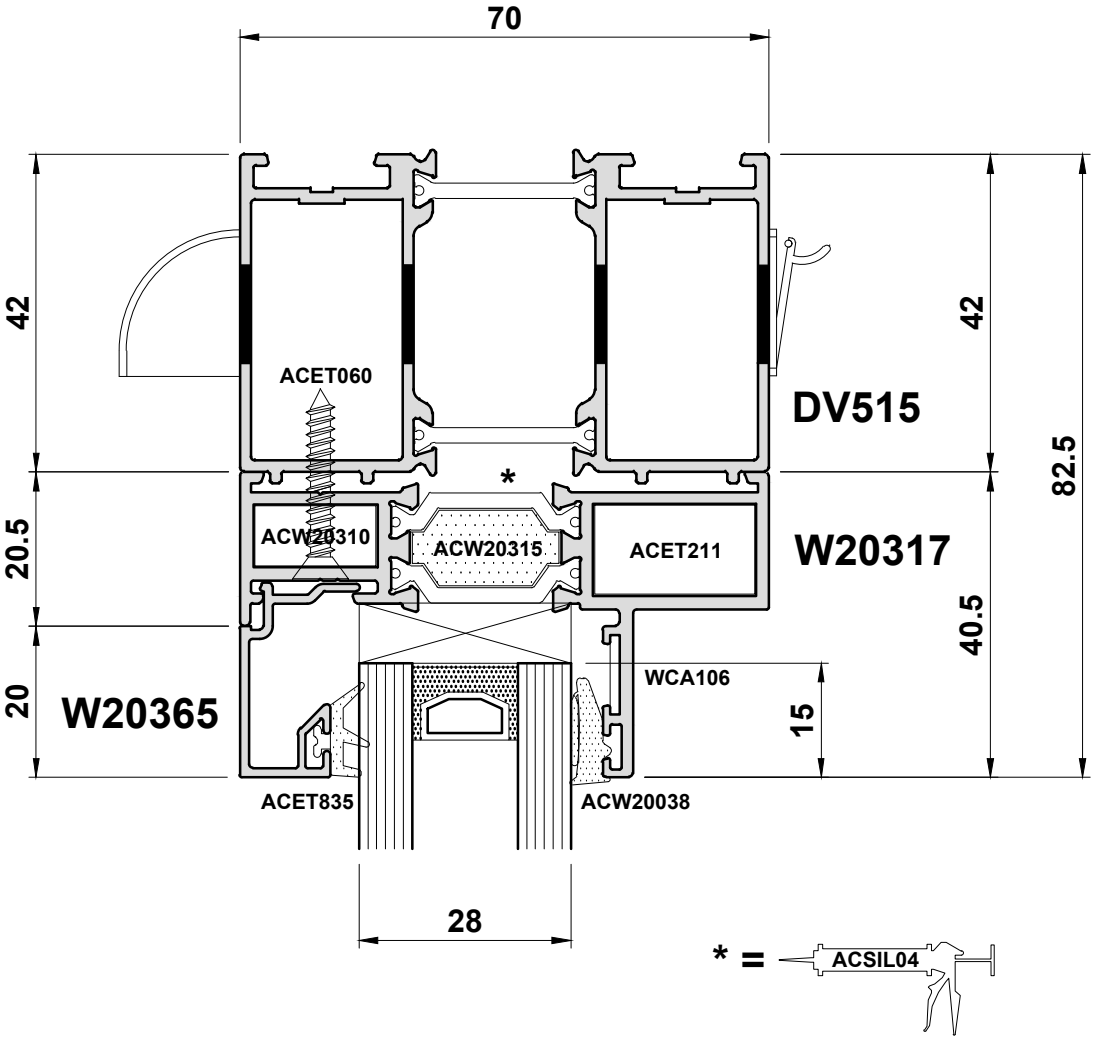

Do Not Scale From This Drawing

Detail 2A

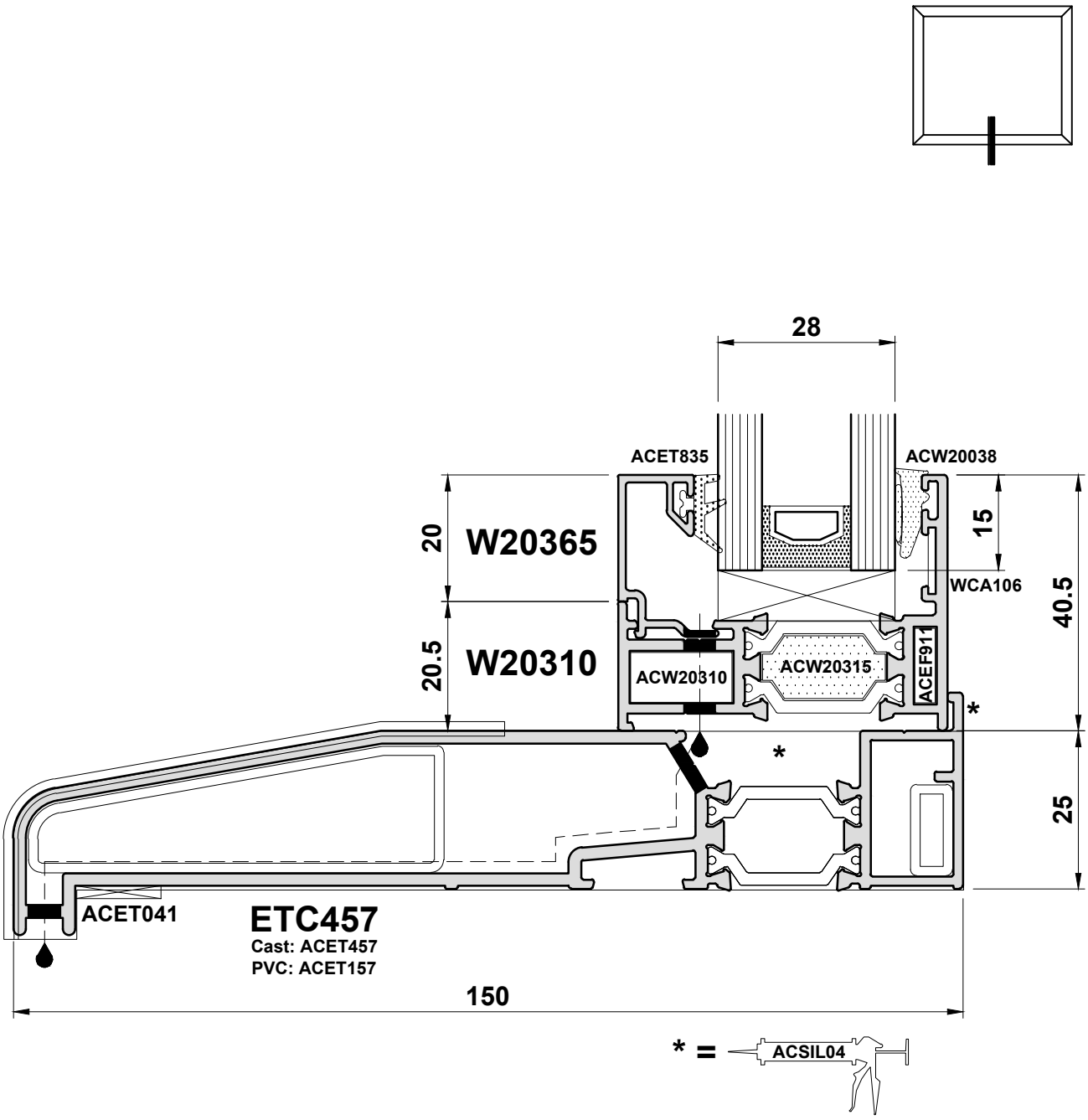

Do Not Scale From This Drawing

Detail 2B

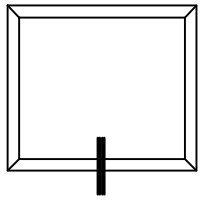

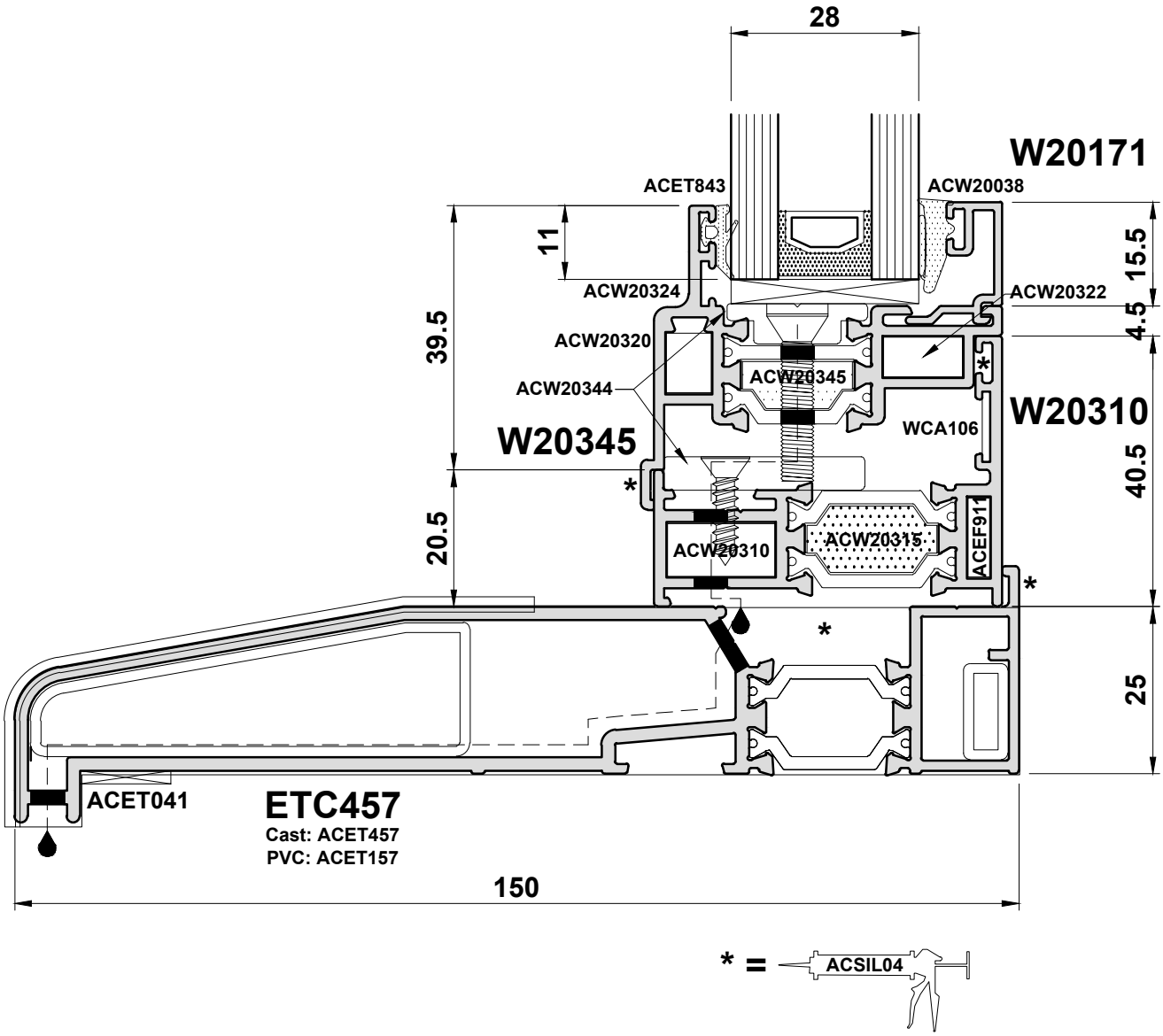

Do Not Scale From This Drawing

Detail 2C

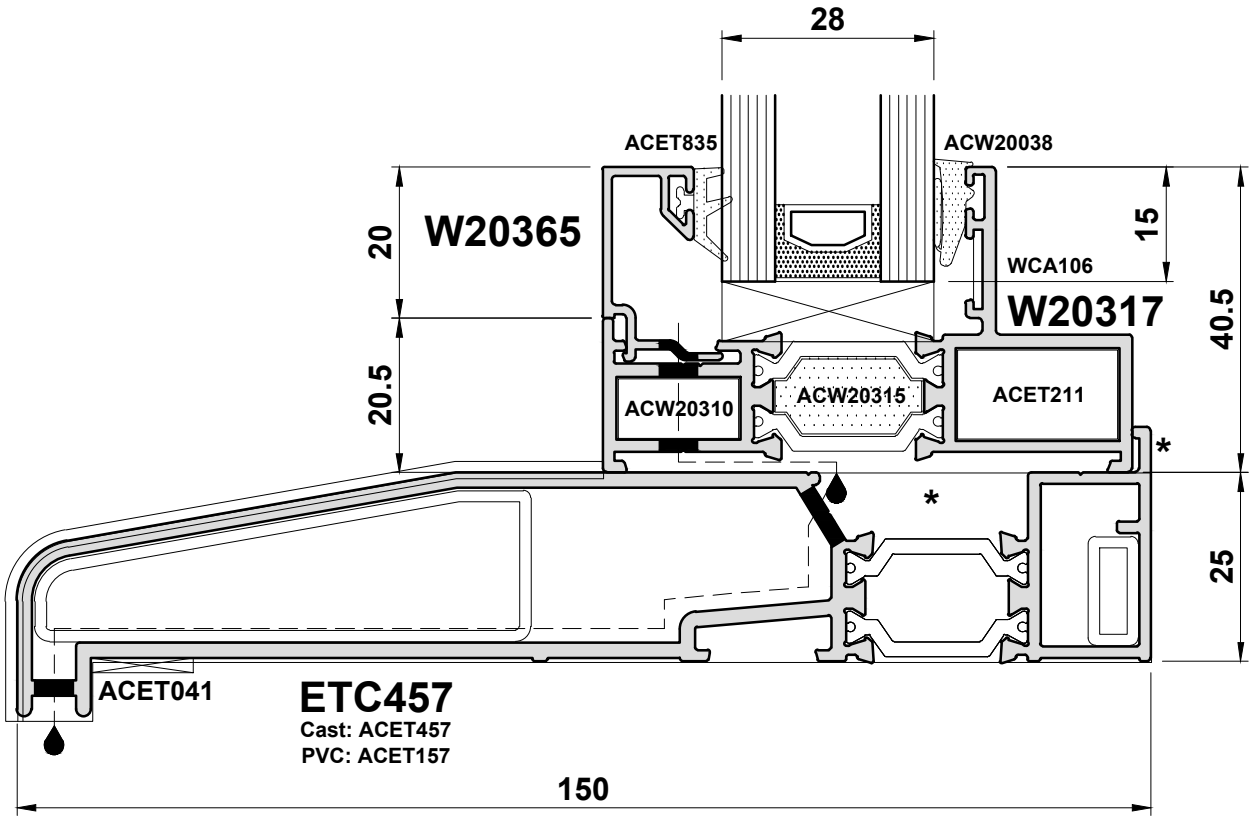

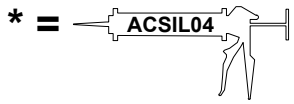

Do Not Scale From This Drawing

Detail 3A

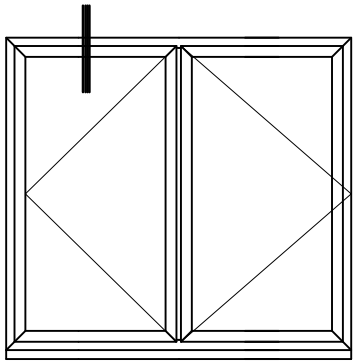

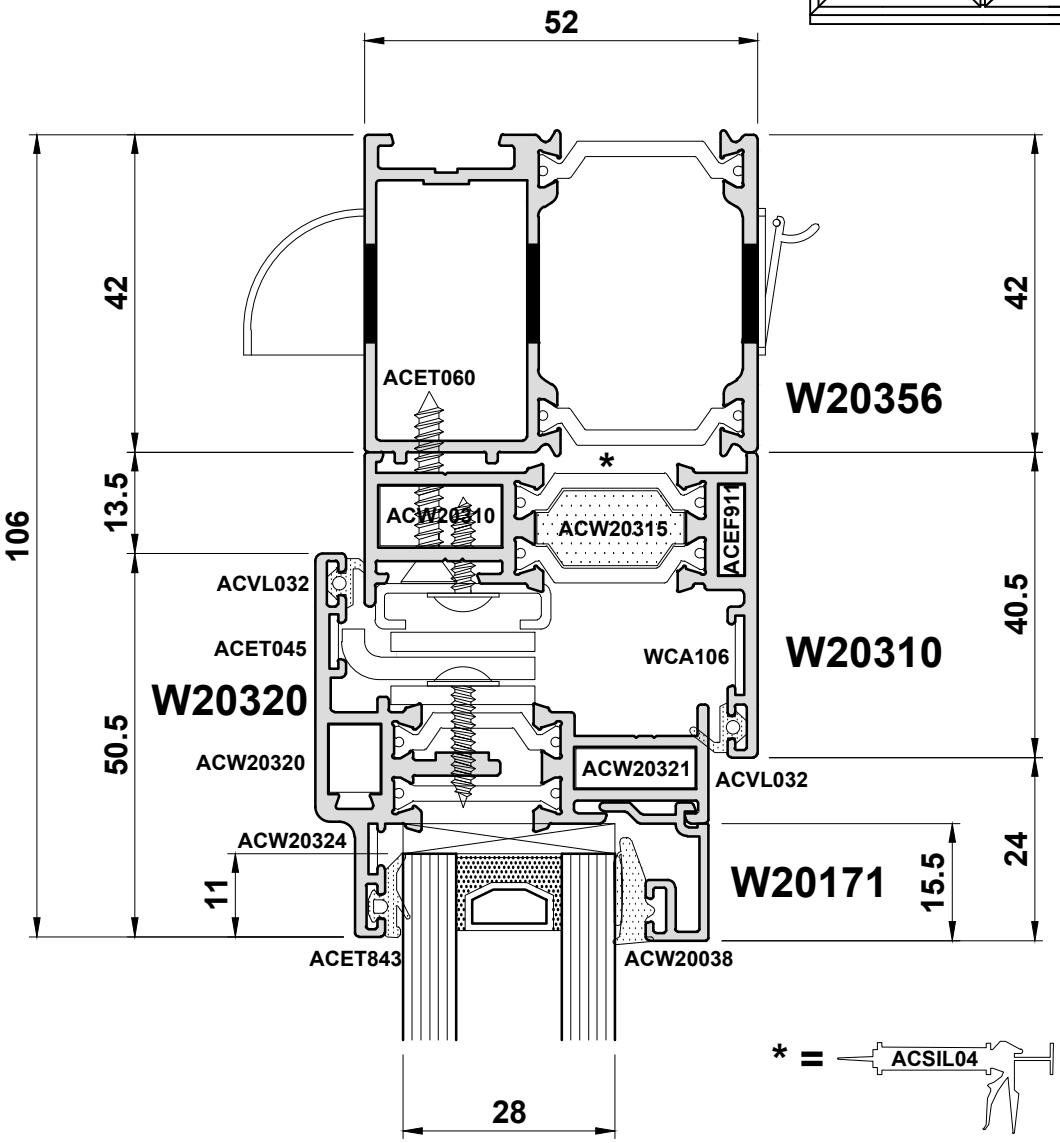

Do Not Scale From This Drawing

Detail 3B

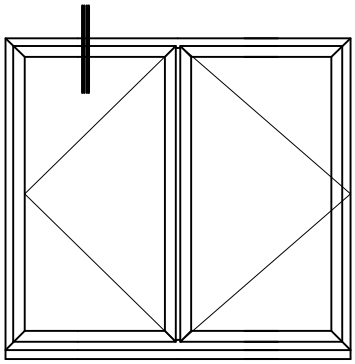

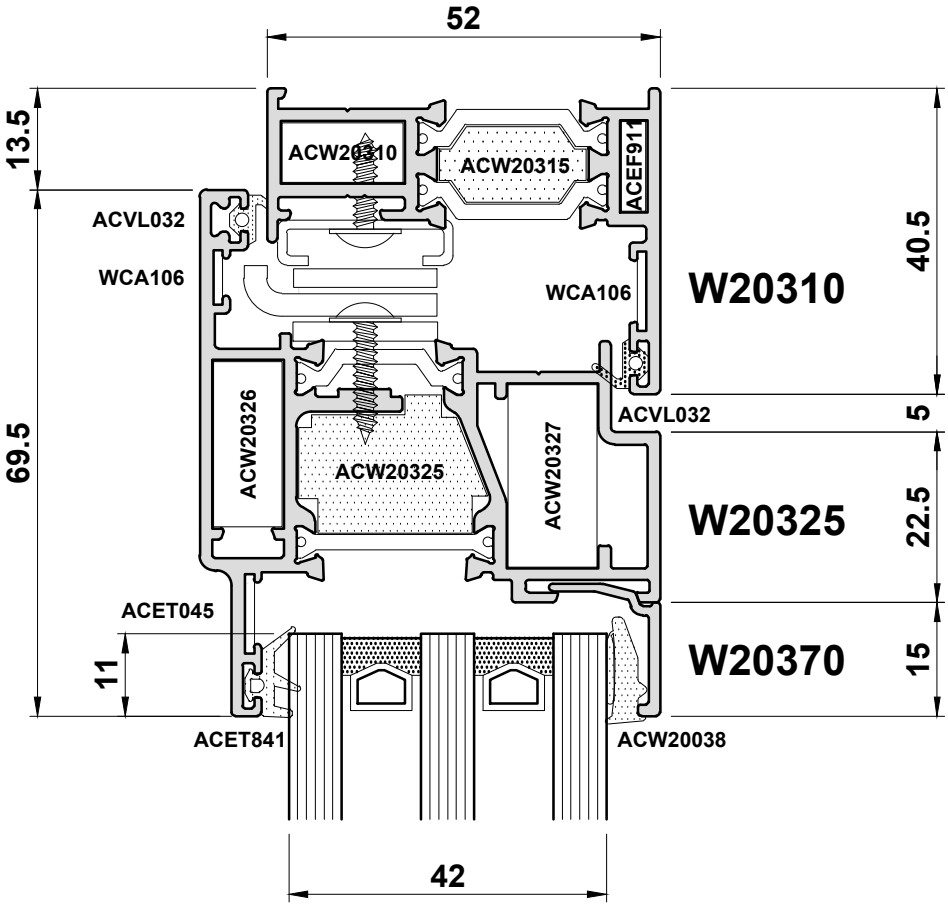

Do Not Scale From This Drawing

ISSUED : AUGUST 2020

Alitherm Heritage HD

Detail 3C

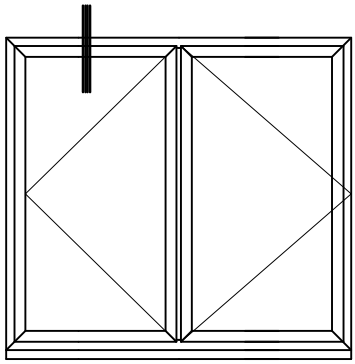

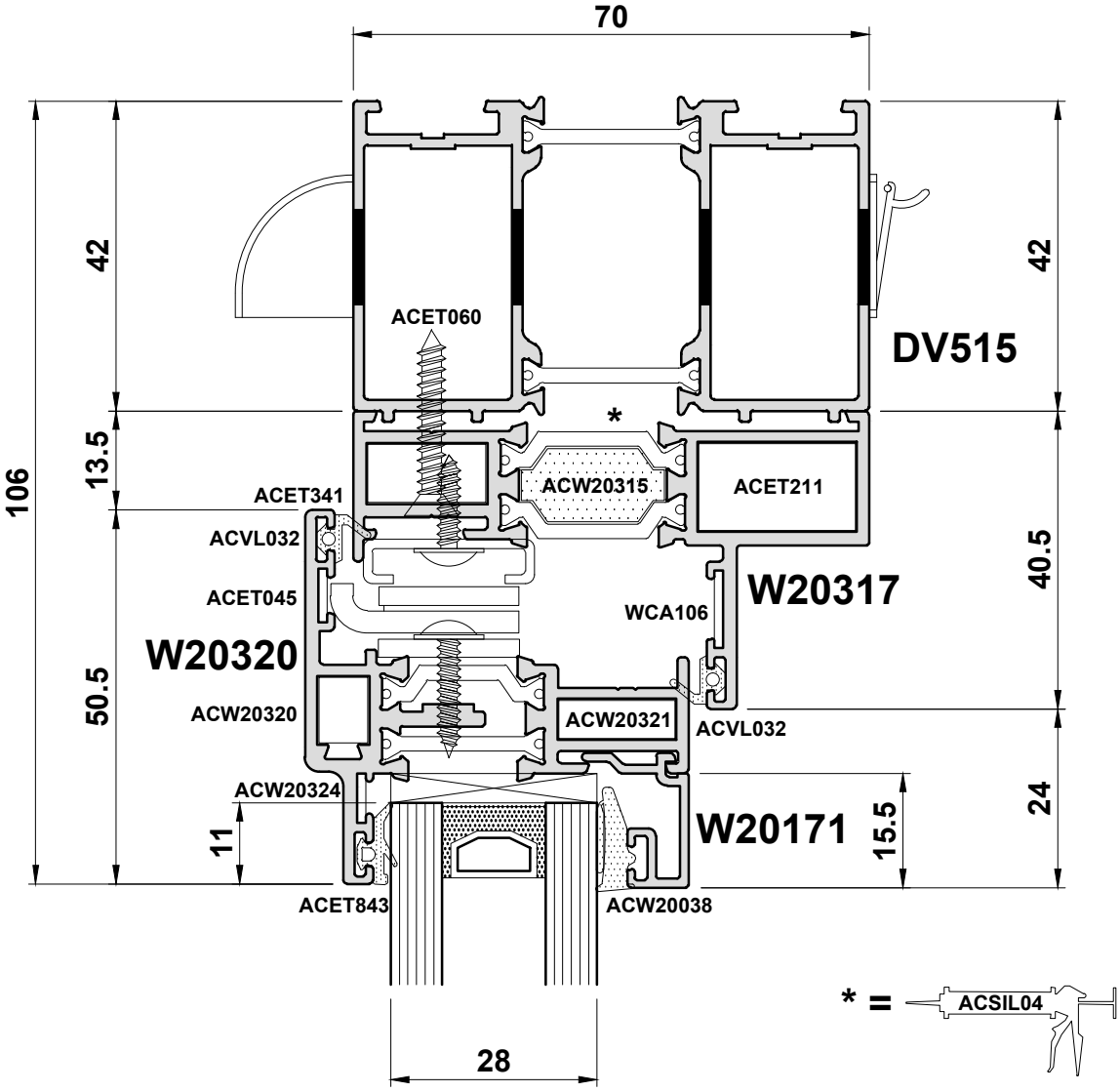

Do Not Scale From This Drawing

Detail 3D

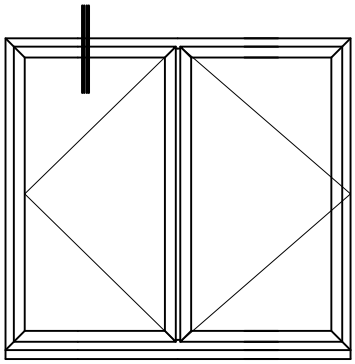

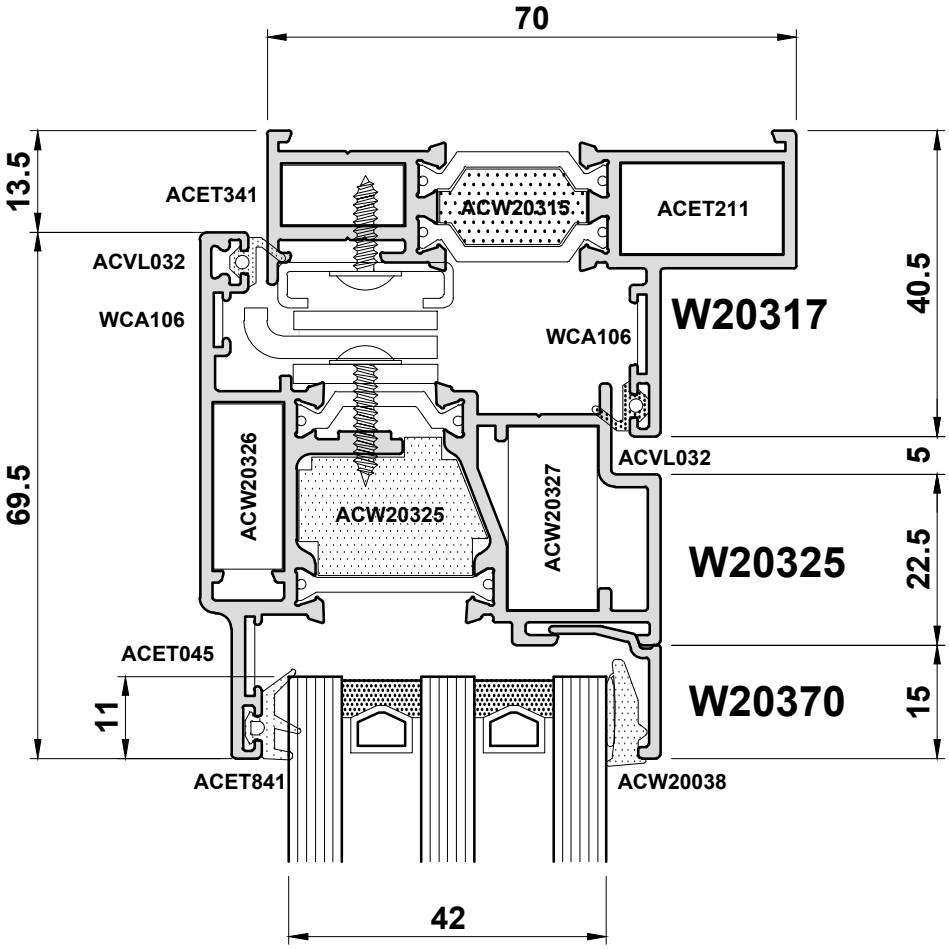

Do Not Scale From This Drawing

ISSUED : AUGUST 2020

Detail 4A

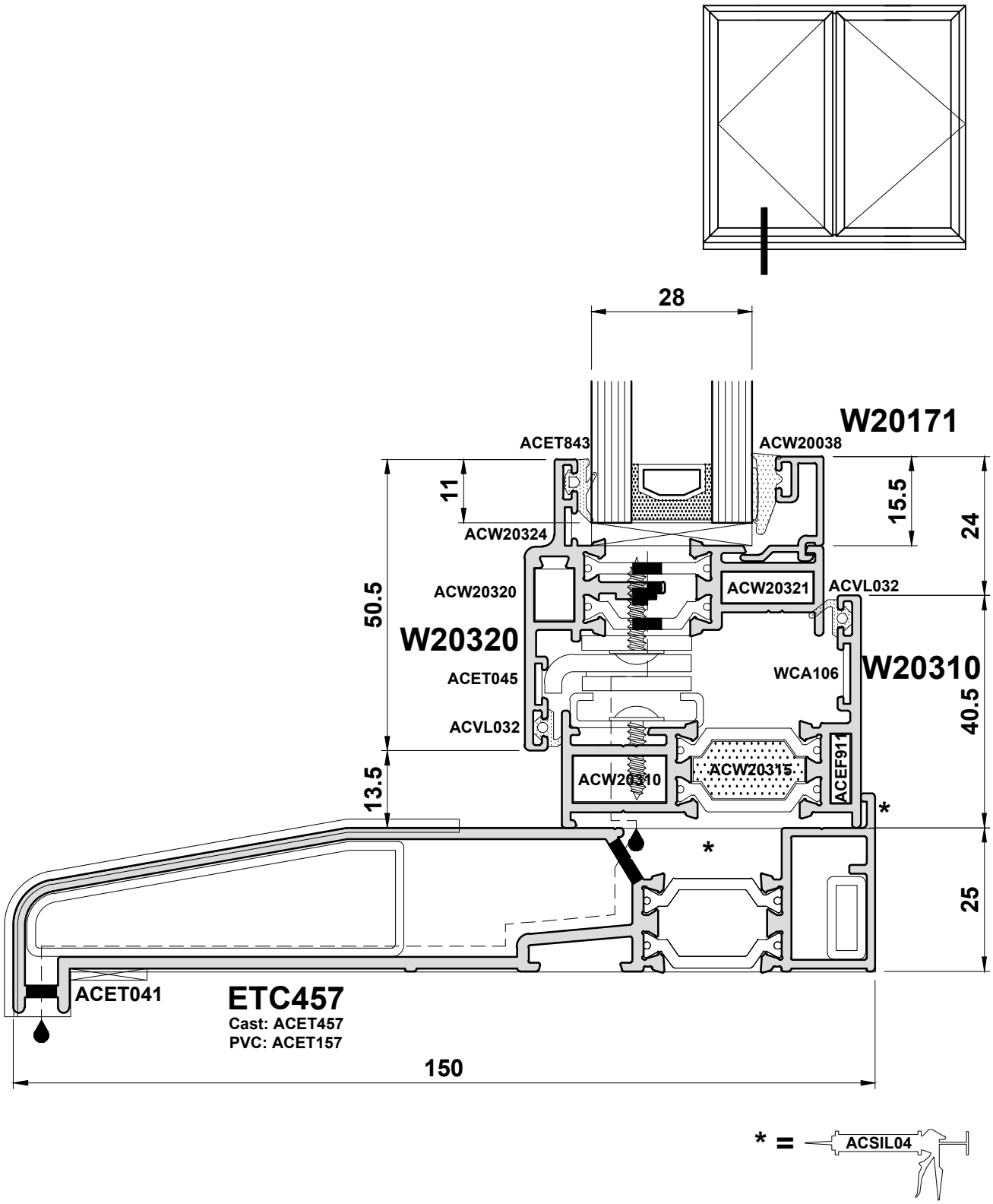

Do Not Scale From This Drawing

Detail 4B

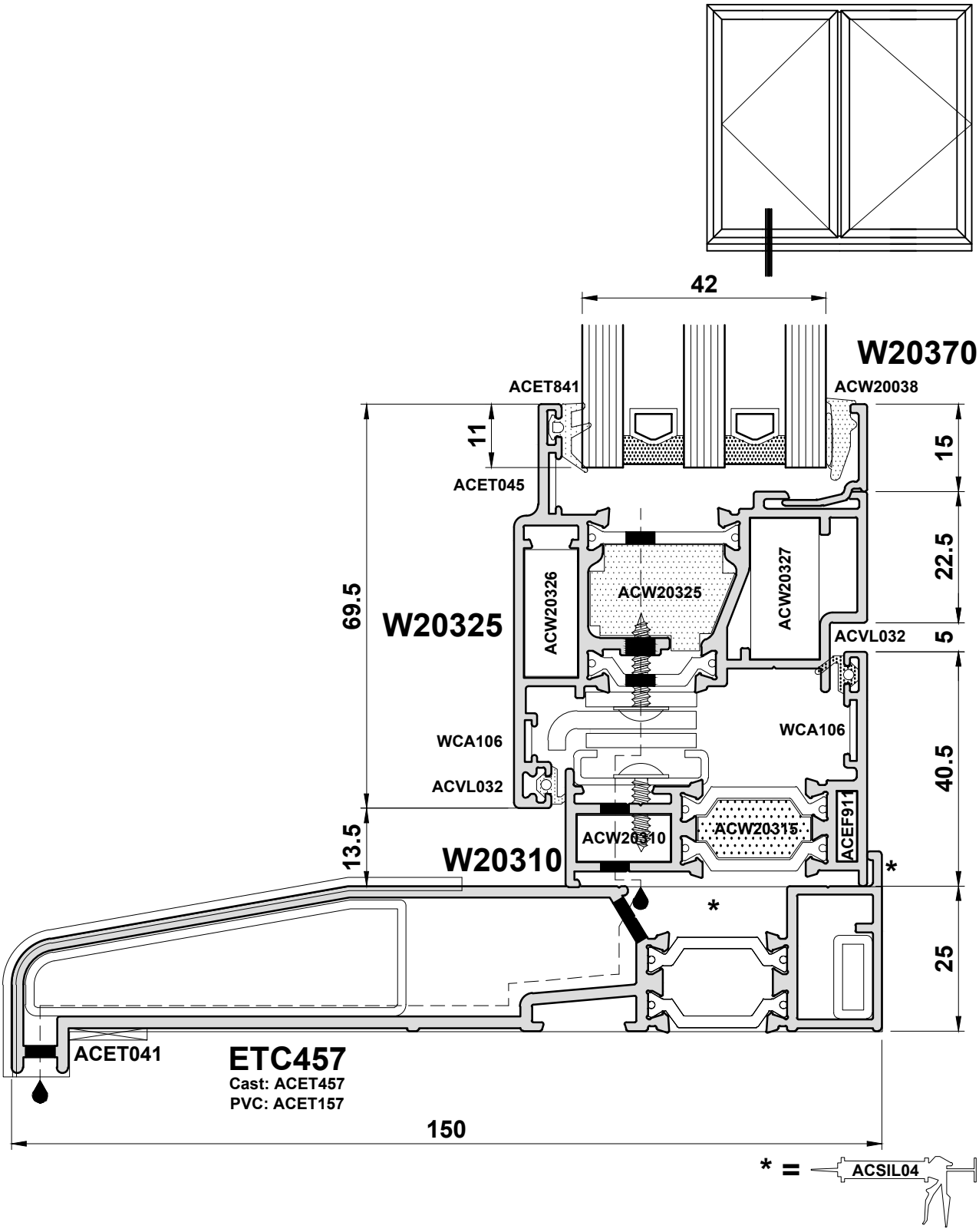

Do Not Scale From This Drawing

Alitherm Heritage HD

Detail 4C

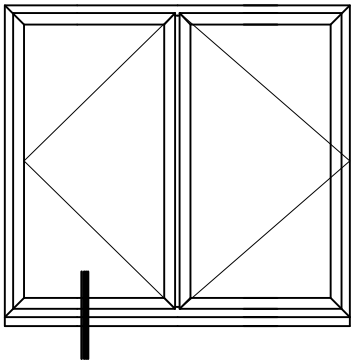

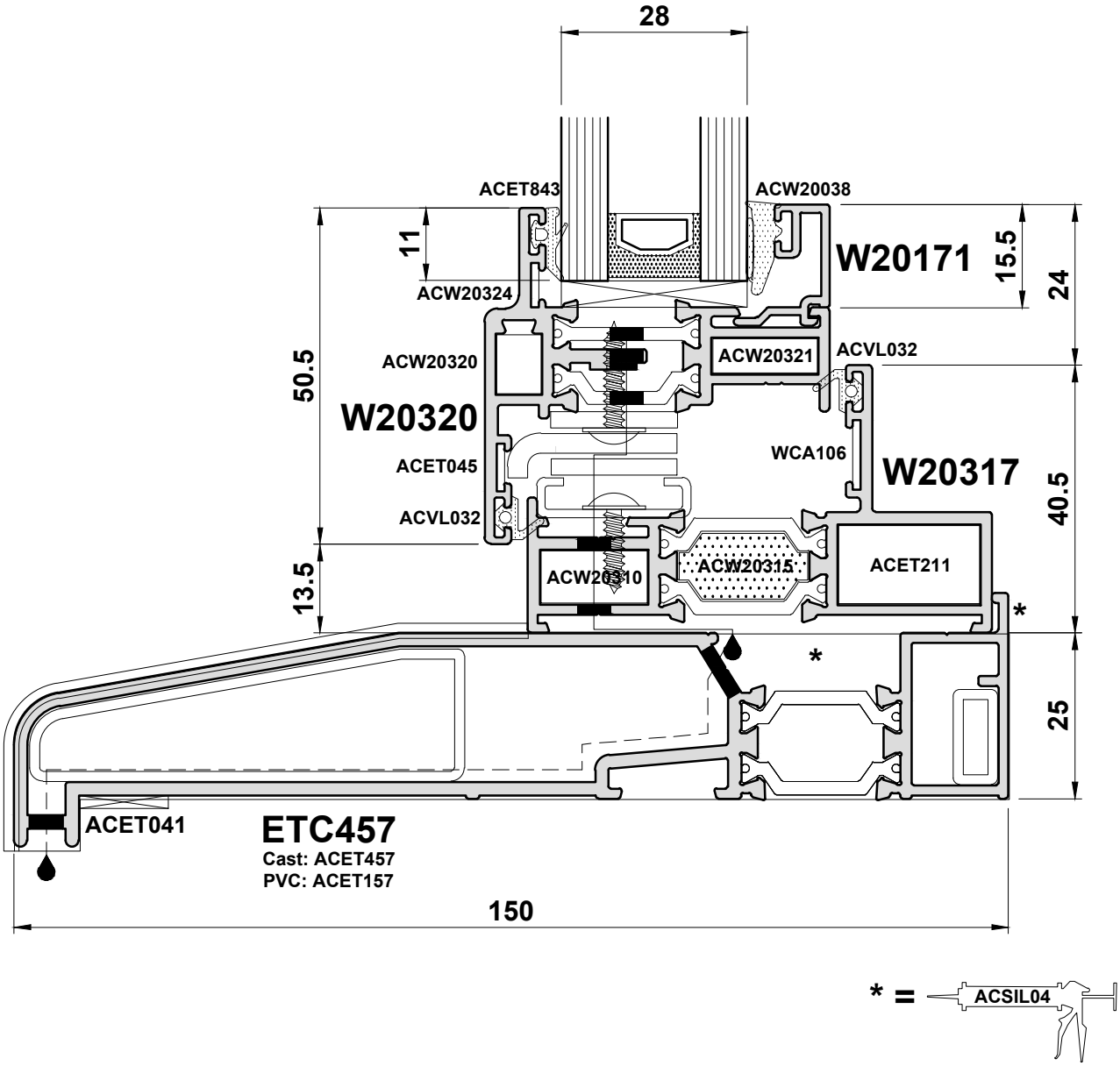

Do Not Scale From This Drawing

Detail 4D

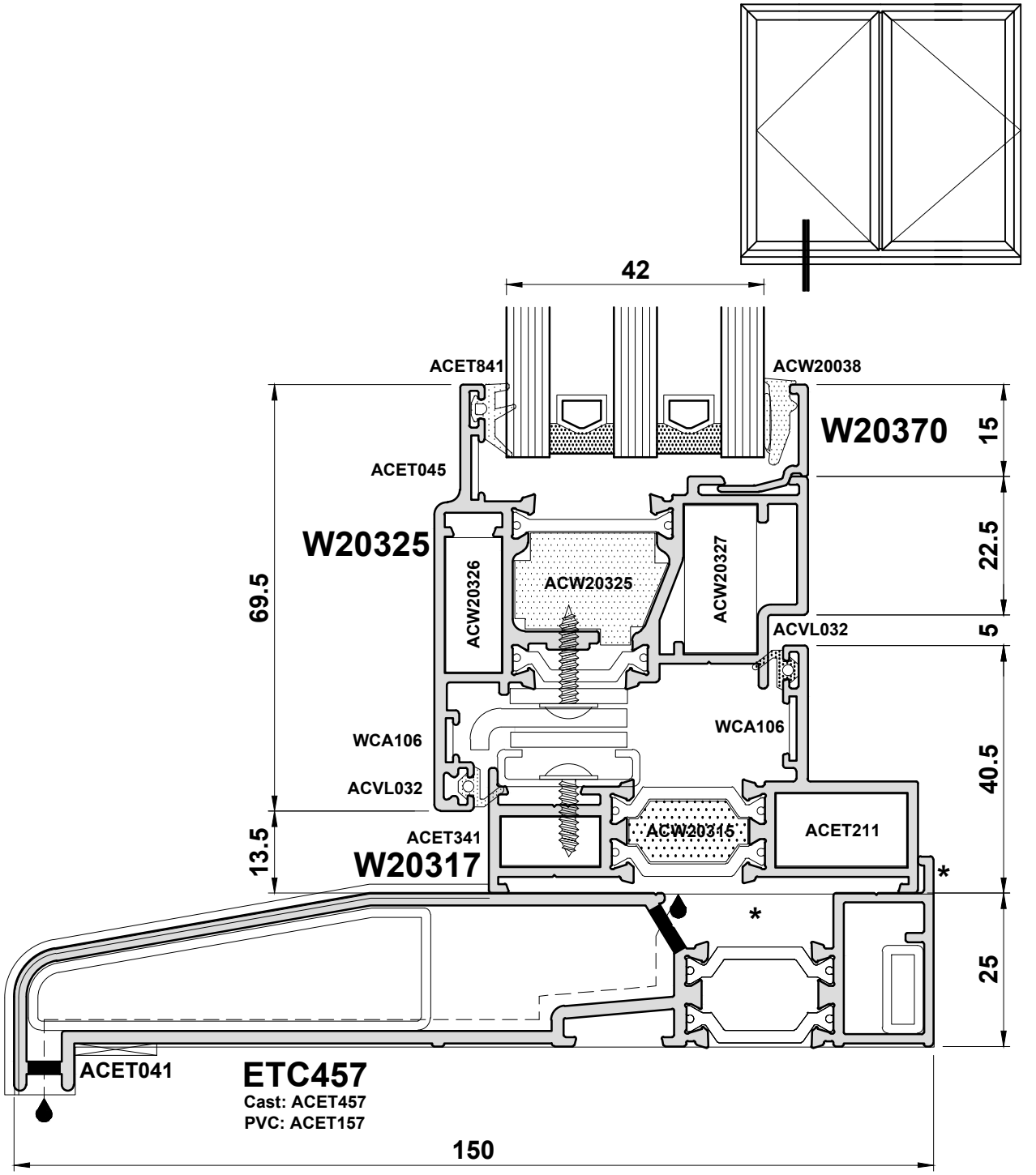

* = ACSIL04

Do Not Scale From This Drawing

Alitherm Heritage HD

Detail 5

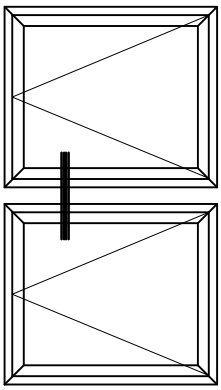

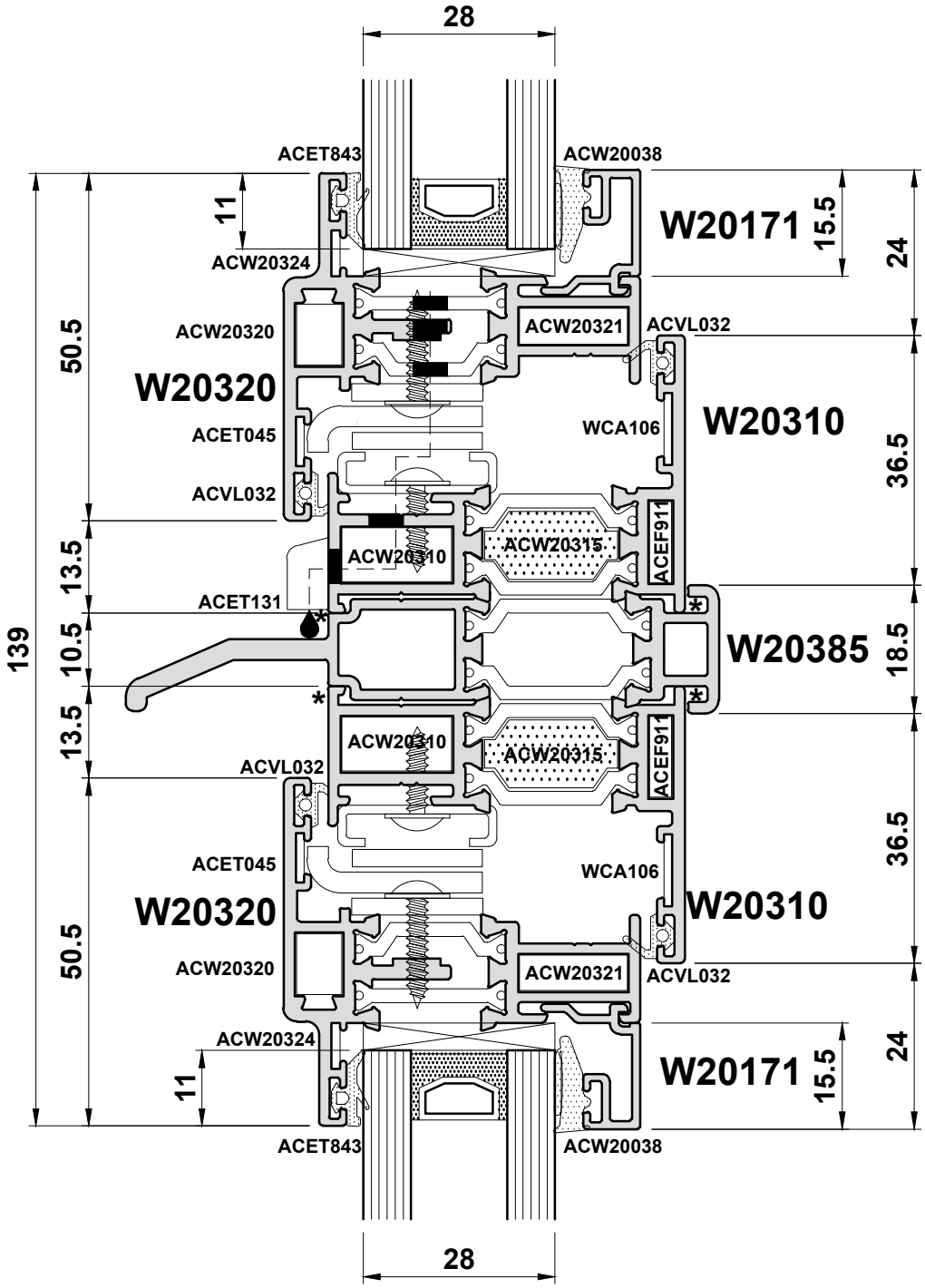

* = ACSIL04

Coupler fixing not shown for clarity

Do Not Scale From This Drawing

Detail 6A

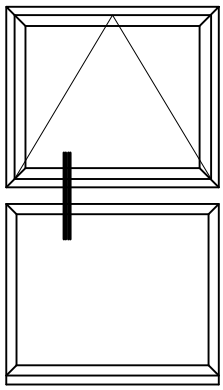

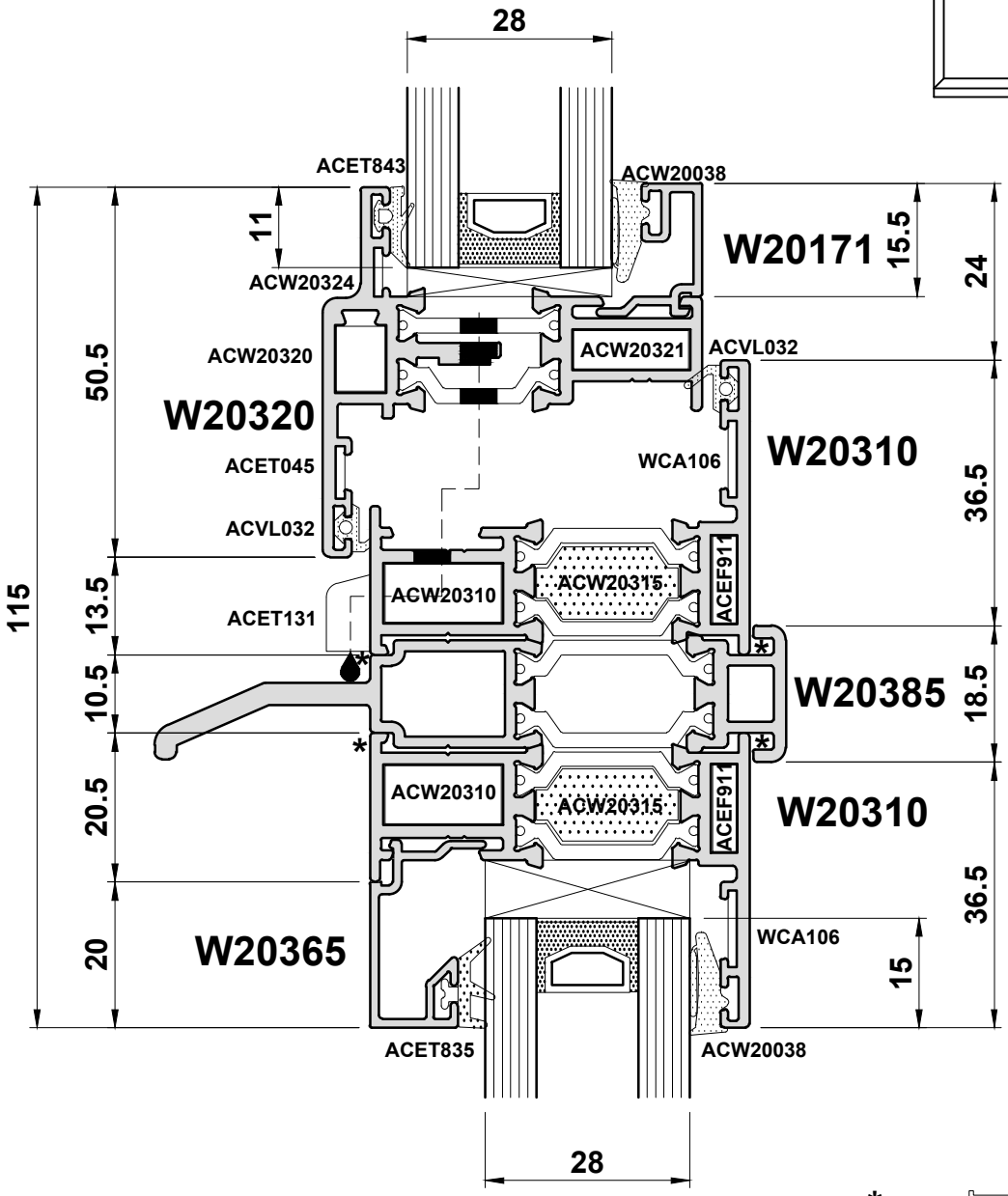

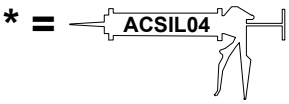

Coupler fixing not shown for clarity

Do Not Scale From This Drawing

ISSUED : AUGUST 2020

Detail 6B

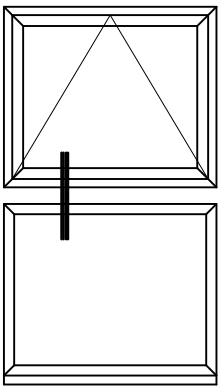

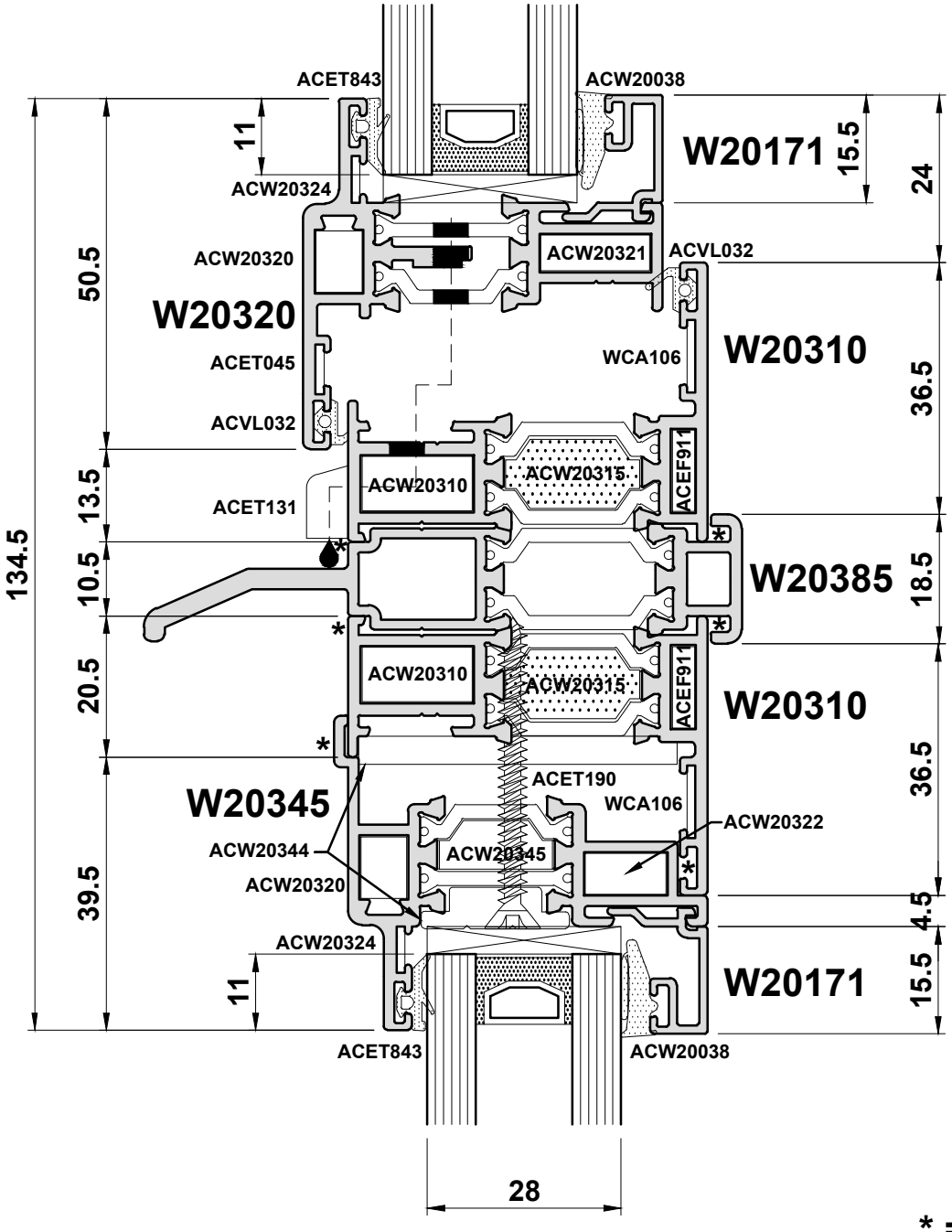

* = ACSIL04

Coupler fixing not shown for clarity

Do Not Scale From This Drawing

Detail 6C

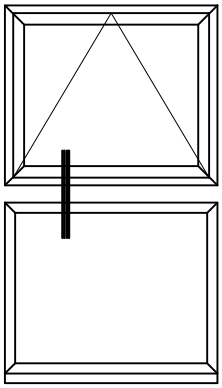

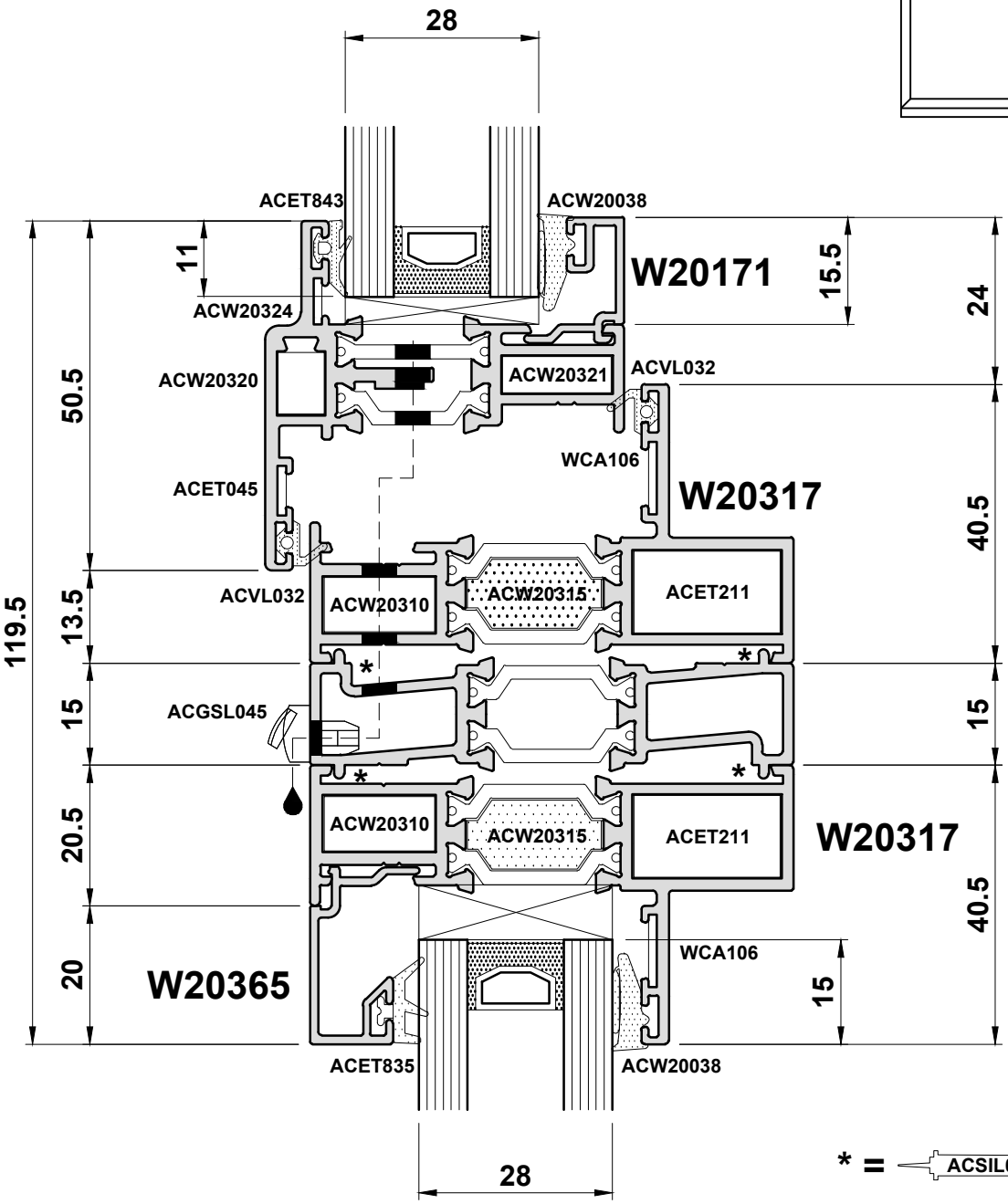

* = ACSIL04

Coupler fixing not shown for clarity

Do Not Scale From This Drawing

ISSUED : AUGUST 2020

Alitherm Heritage HD

Detail 7

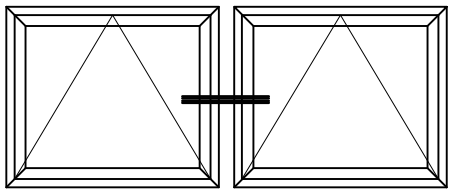

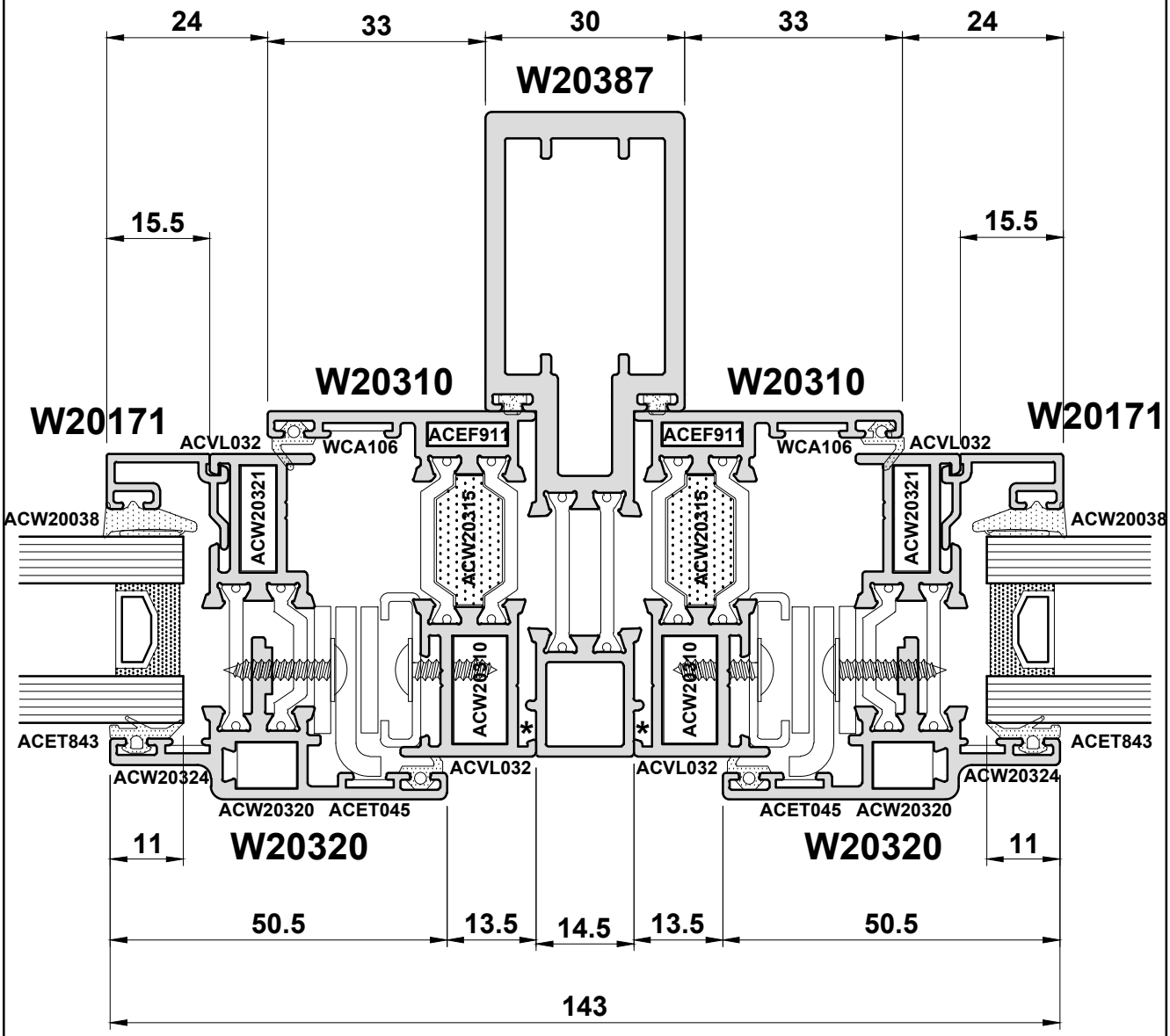

* = ACSIL04

Coupler fixing not shown for clarity

Do Not Scale From This Drawing

Detail 8A

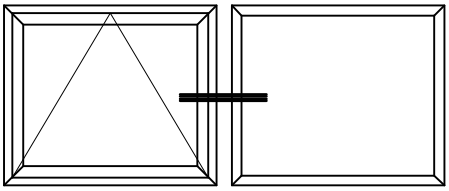

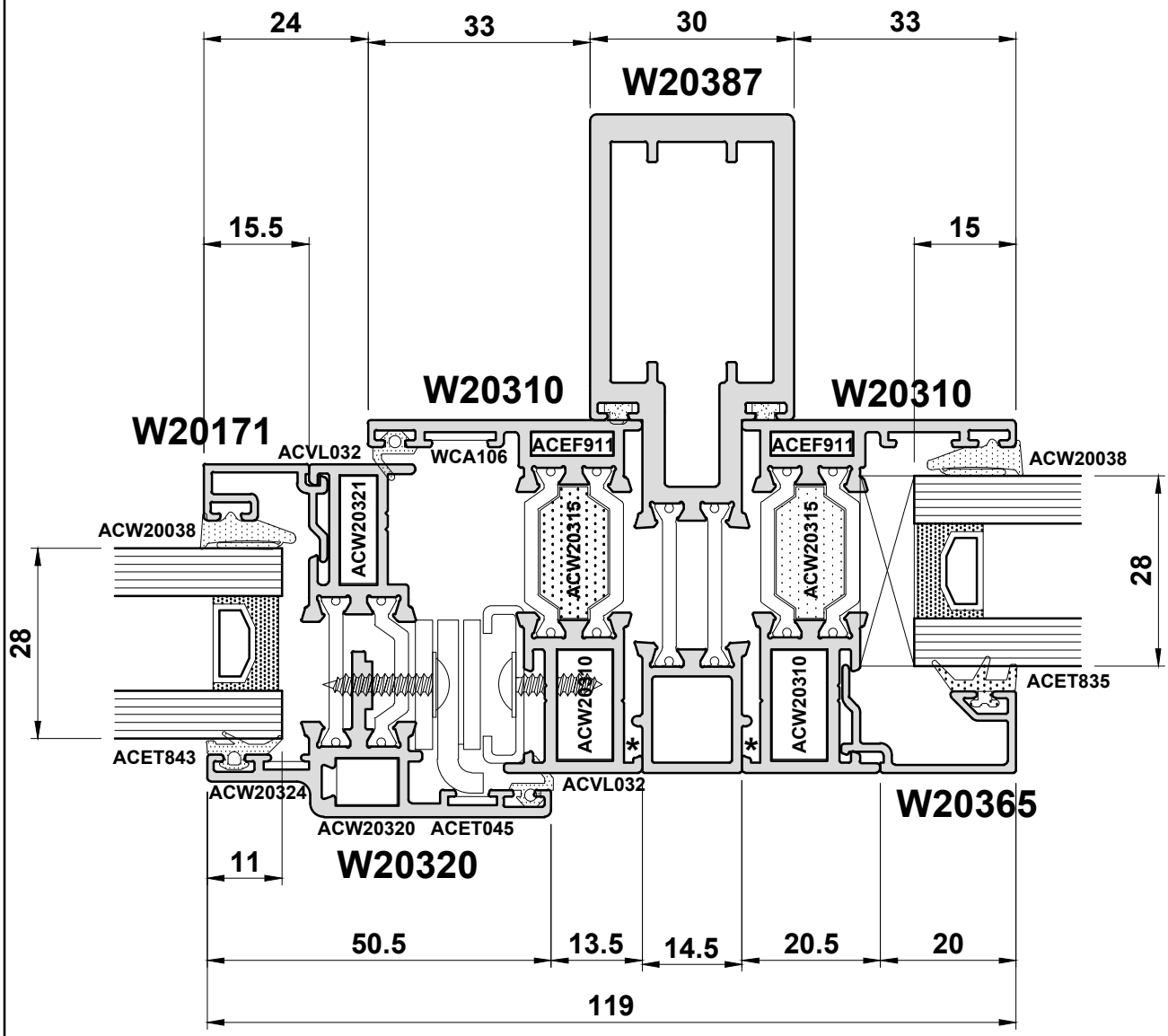

* = ACSIL04

Coupler fixing not shown for clarity

Do Not Scale From This Drawing

ISSUED : AUGUST 2020

Detail 8B

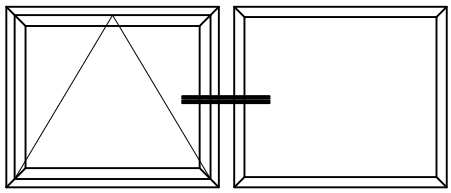

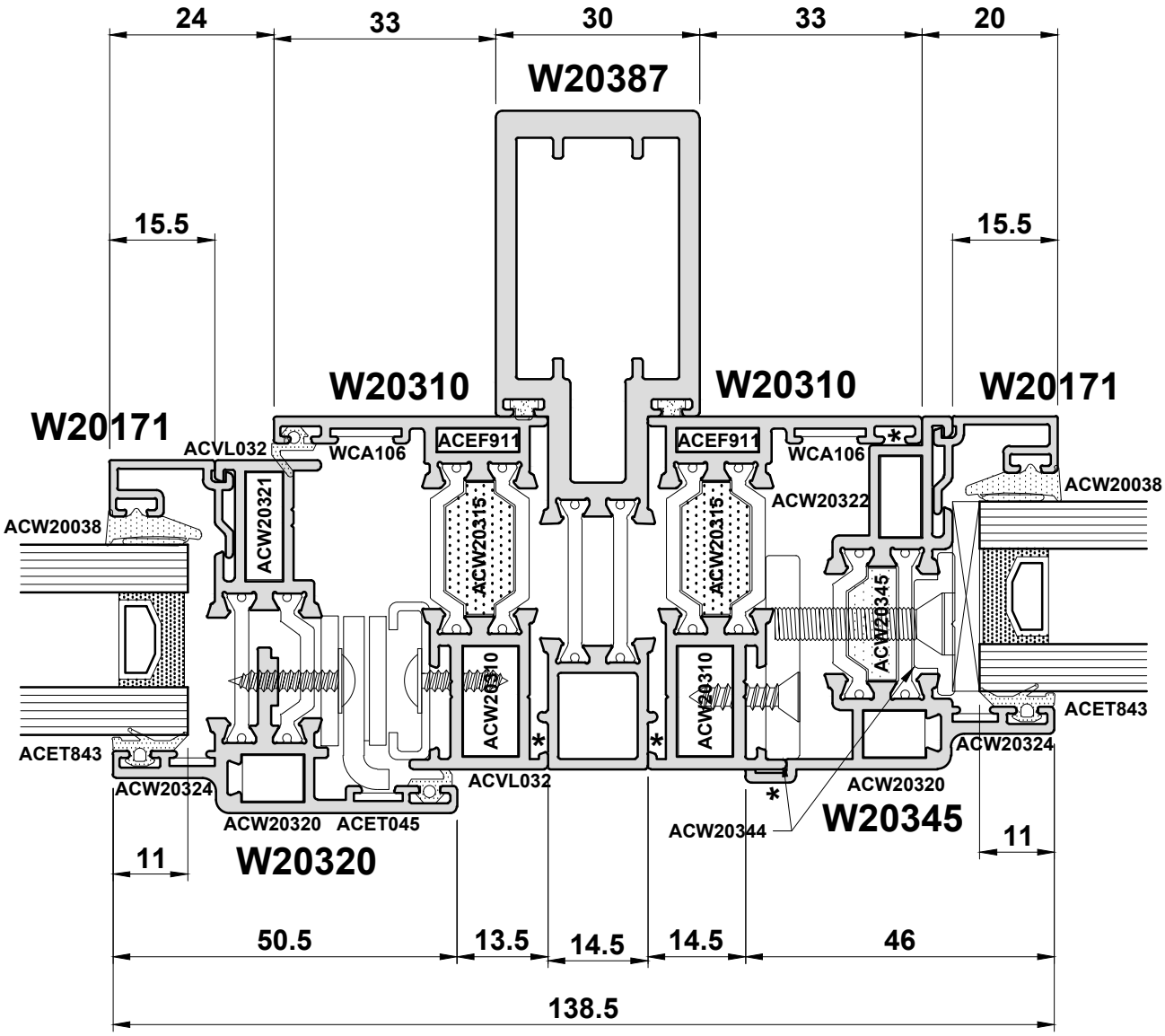

* = ACSIL04

Coupler fixing not shown for clarity

Do Not Scale From This Drawing

Detail 8C

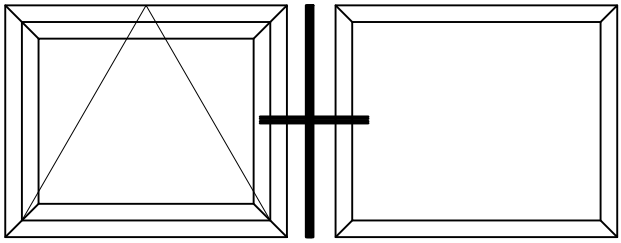

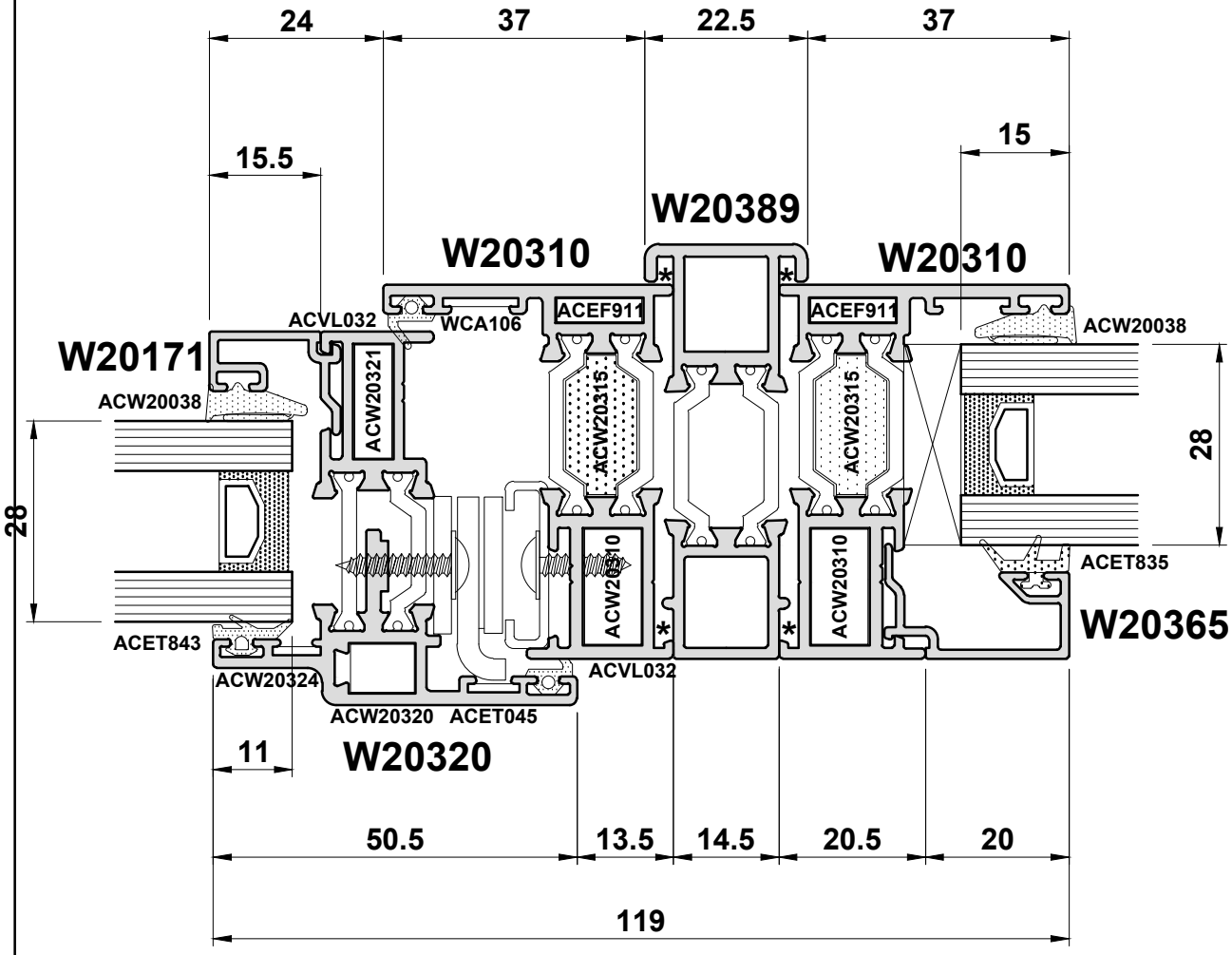

* = ACSIL04

Coupler fixing not shown for clarity

Do Not Scale From This Drawing

ISSUED : AUGUST 2020

Detail 8D

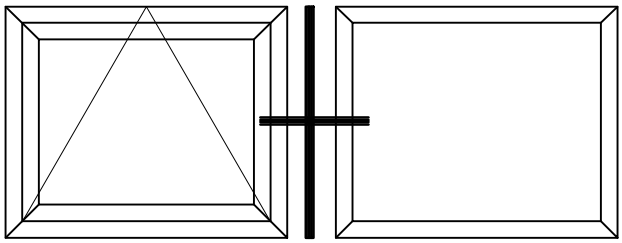

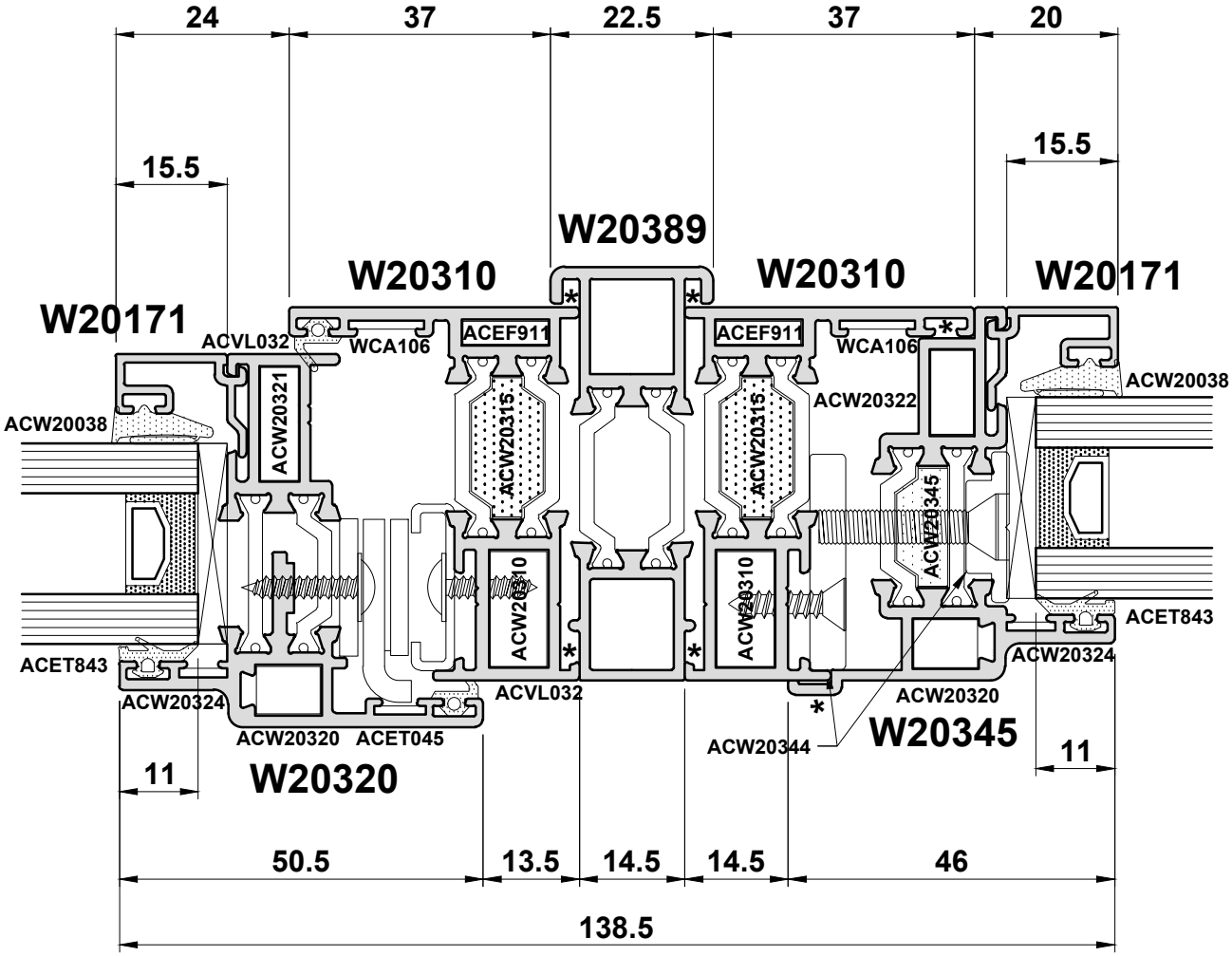

* = ACSIL04

Coupler fixing not shown for clarity

Do Not Scale From This Drawing

Detail 8E

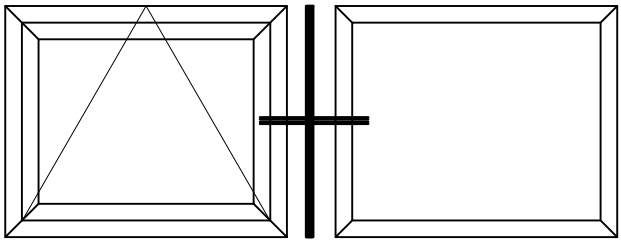

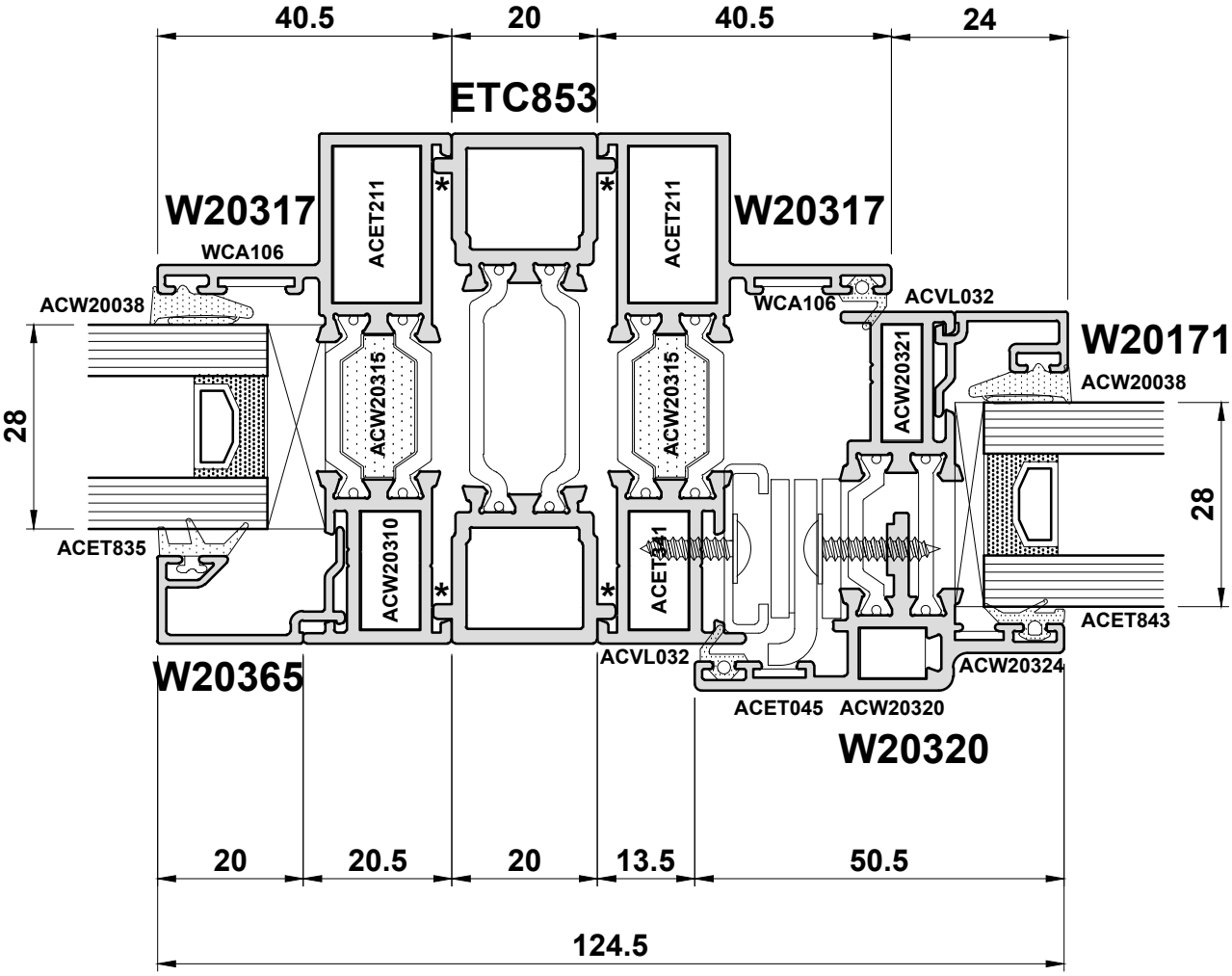

* = ACSIL04

Coupler fixing not shown for clarity

Do Not Scale From This Drawing

ISSUED : AUGUST 2020

Alitherm Heritage HD

Detail 9A

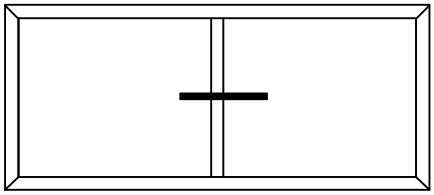

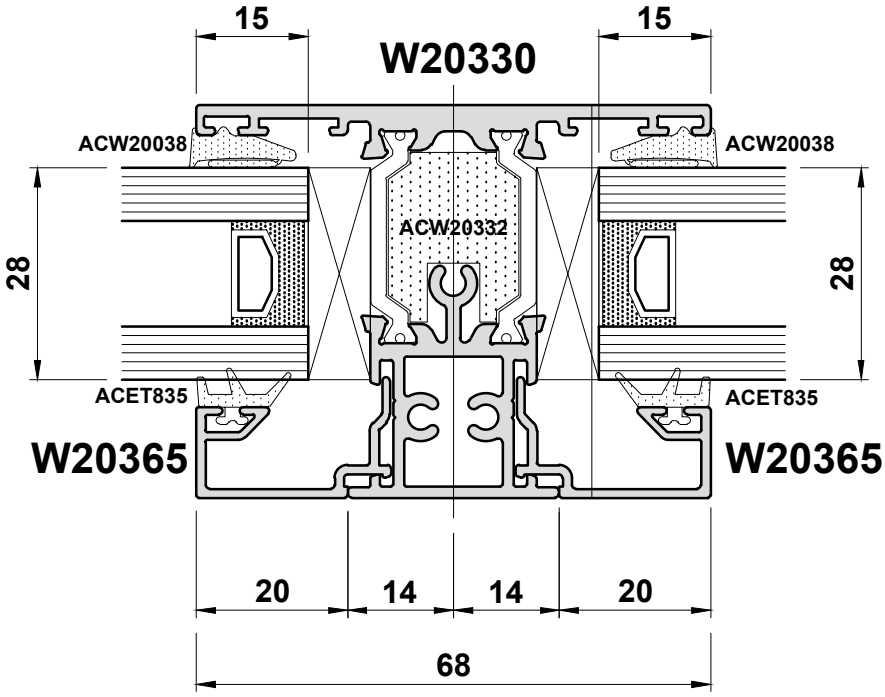

Do Not Scale From This Drawing

Detail 9B

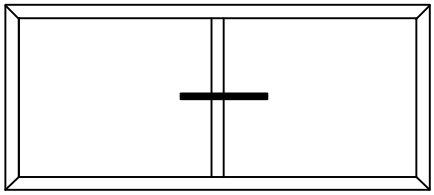

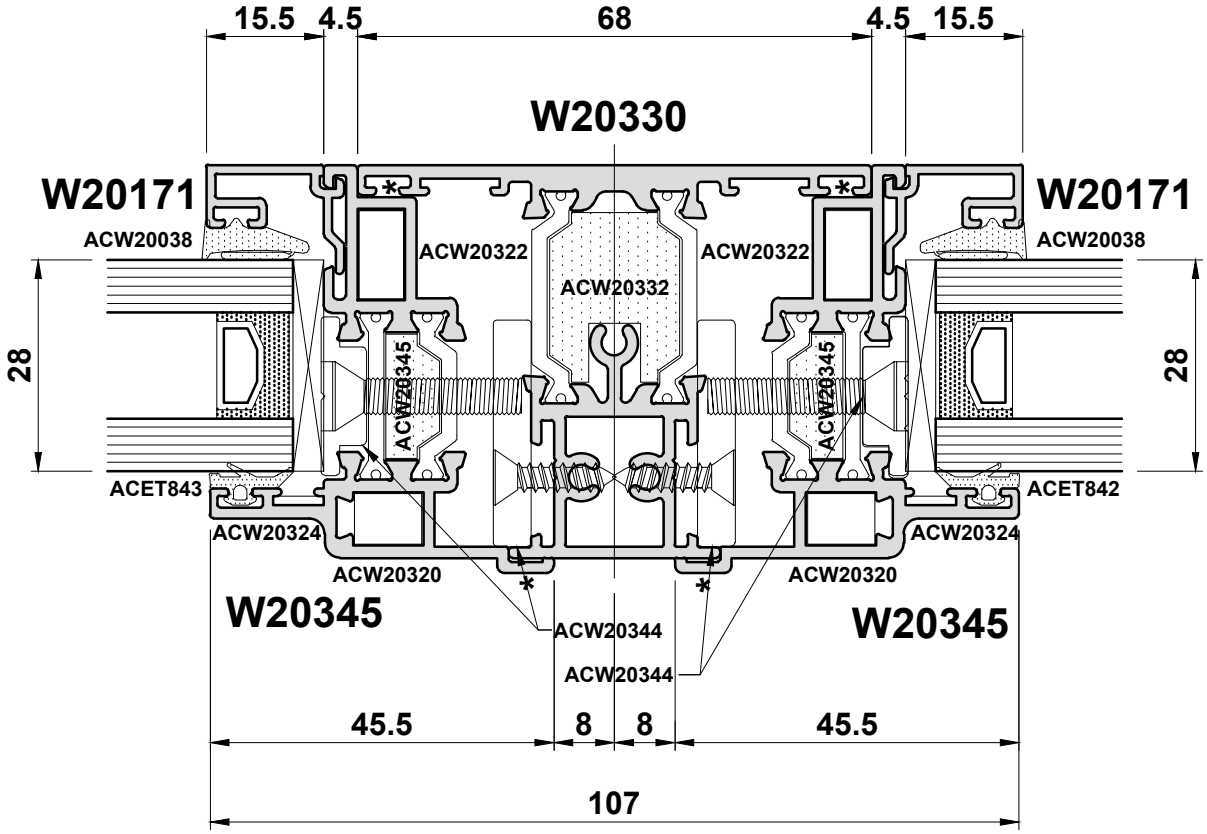

* = ACSIL04

Do Not Scale From This Drawing

ISSUED : AUGUST 2020

Detail 9C

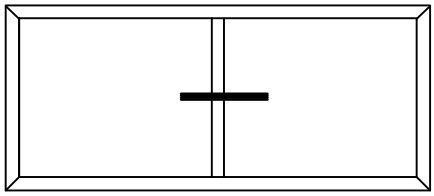

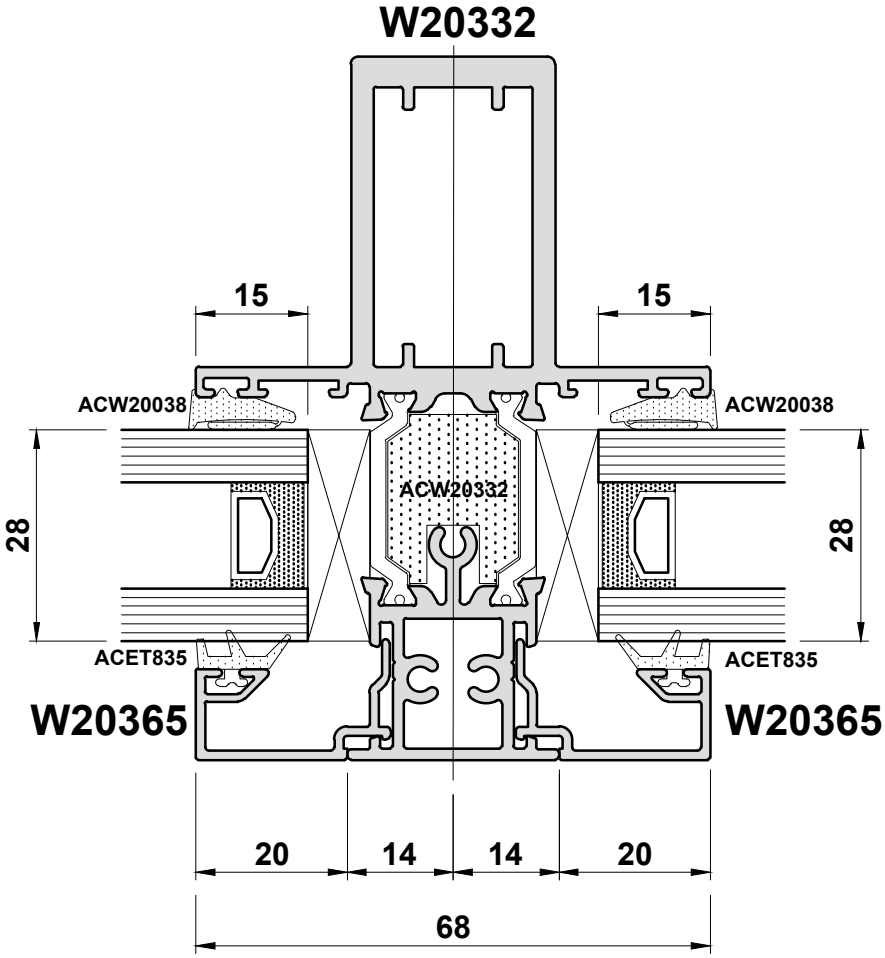

Do Not Scale From This Drawing

Detail 10A

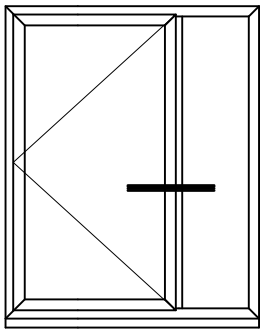

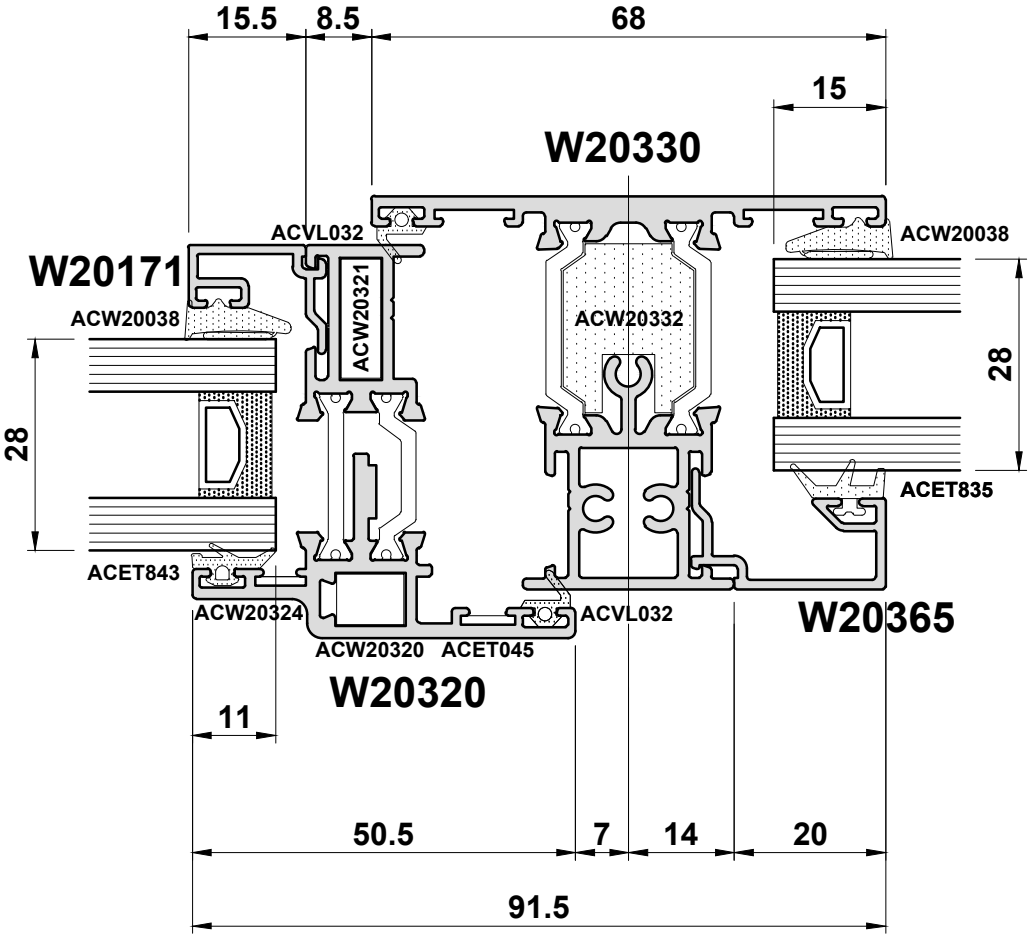

Do Not Scale From This Drawing

Detail 10B

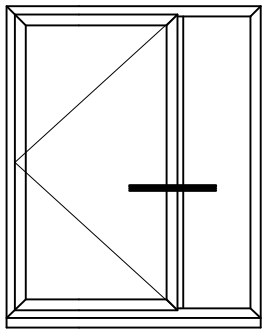

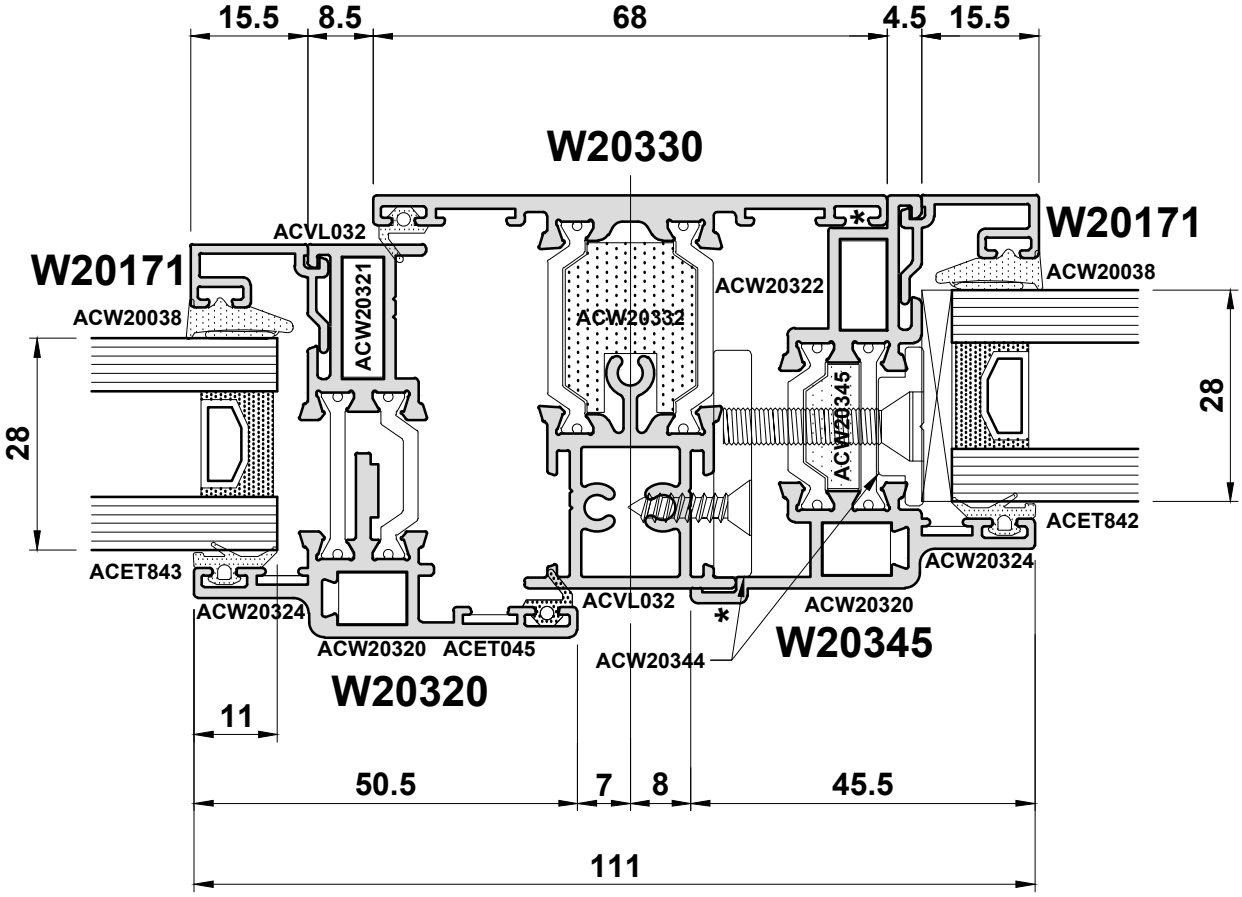

* = ACSIL04

Do Not Scale From This Drawing

Detail 11

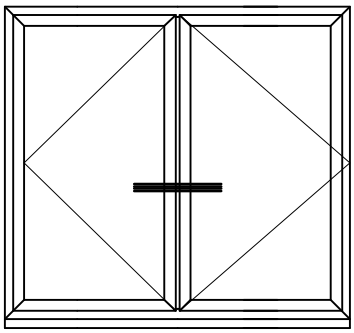

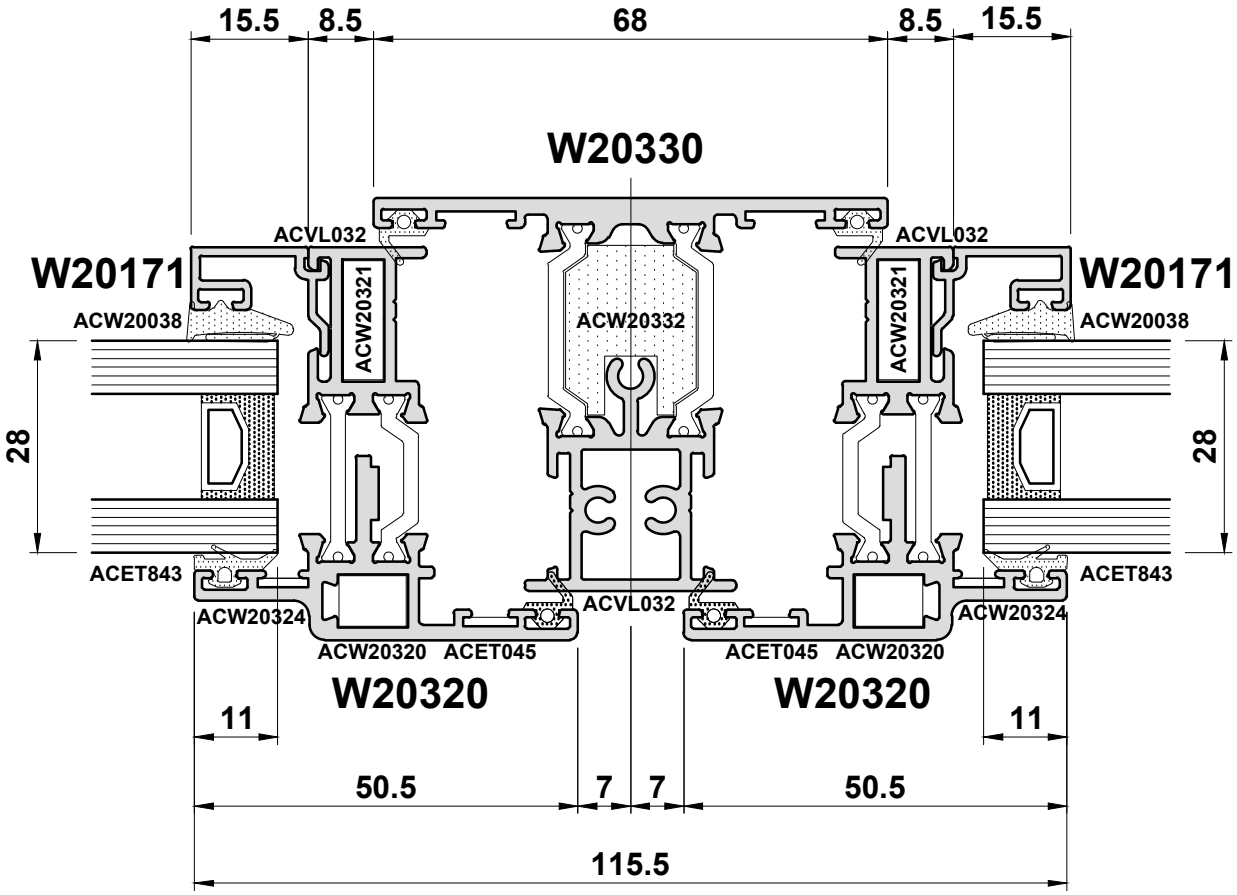

Do Not Scale From This Drawing

Detail 12A

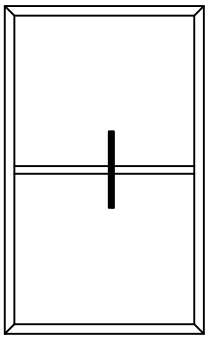

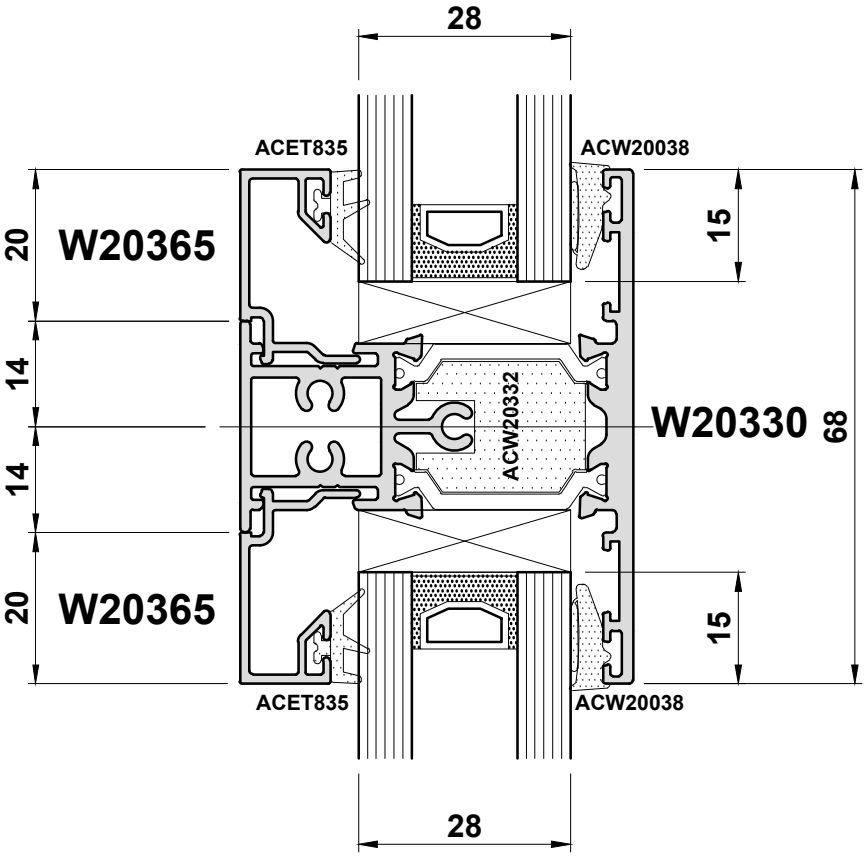

Do Not Scale From This Drawing

Detail 12B

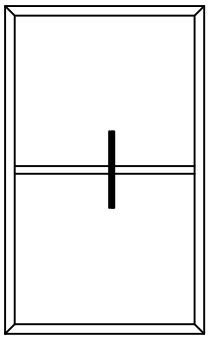

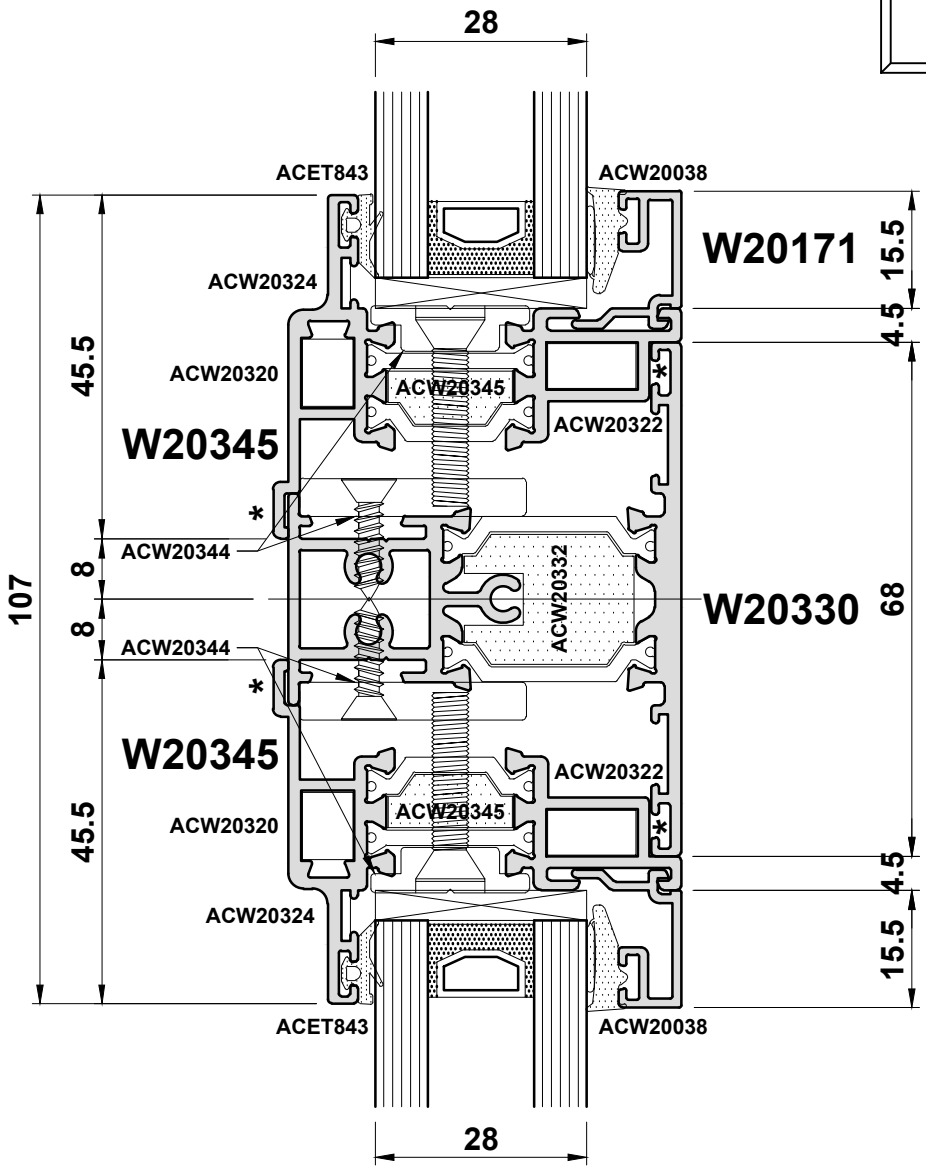

* = ACSIL04

Do Not Scale From This Drawing

ISSUED : AUGUST 2020

Detail 12C

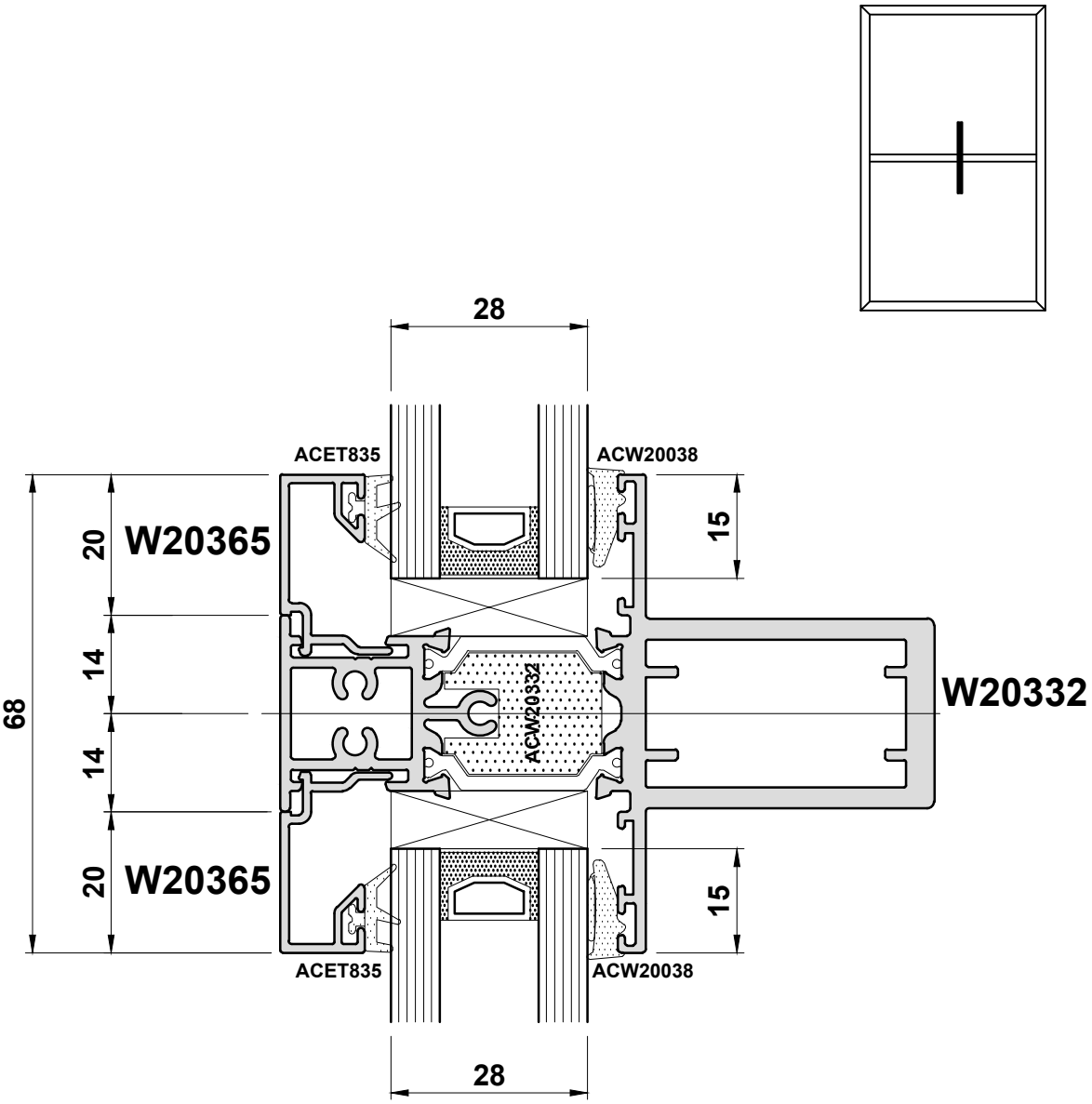

Do Not Scale From This Drawing

Detail 13A

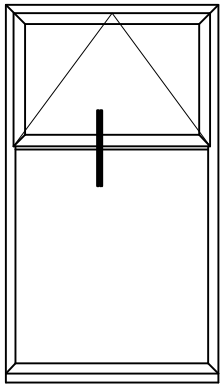

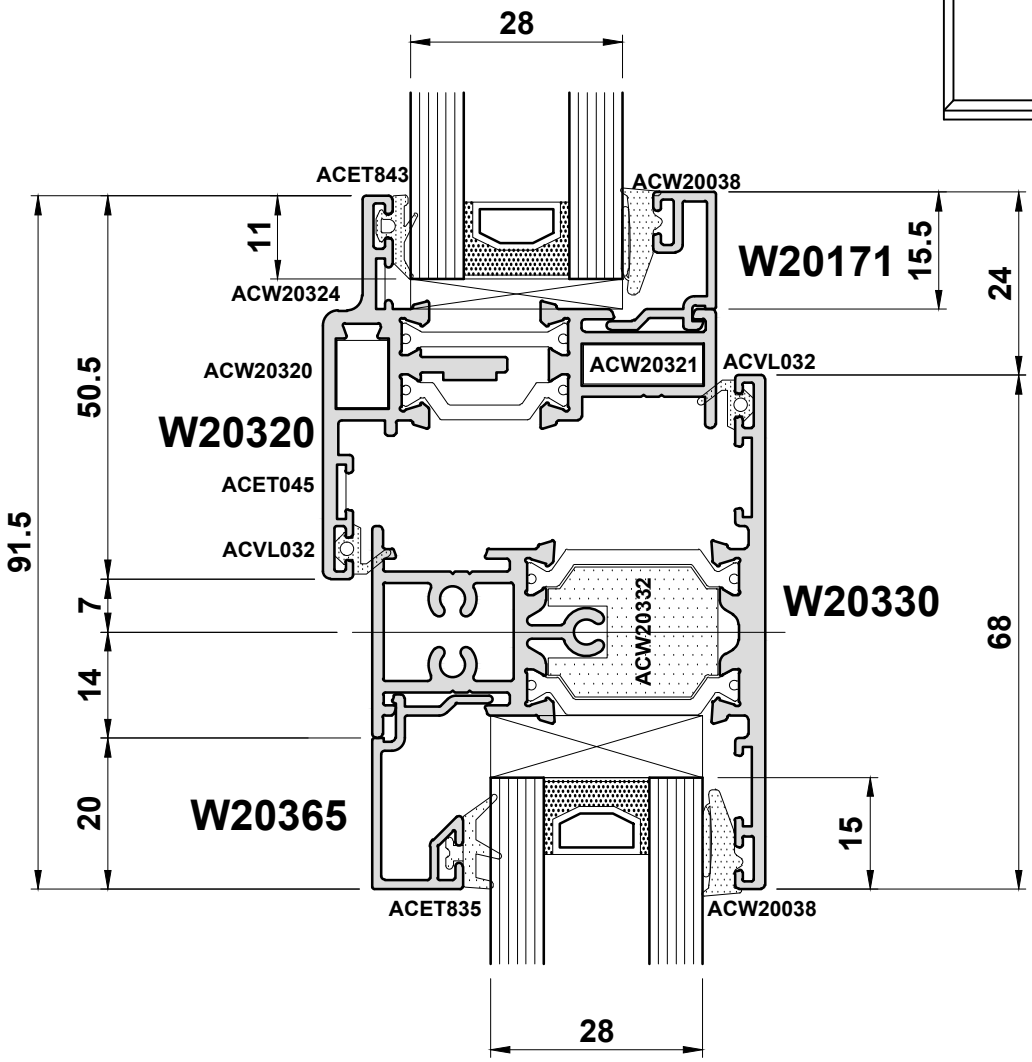

Note: Transoms will drain through the join to the outerframe.

Do Not Scale From This Drawing

ISSUED : AUGUST 2020

Alitherm Heritage HD

Detail 13B

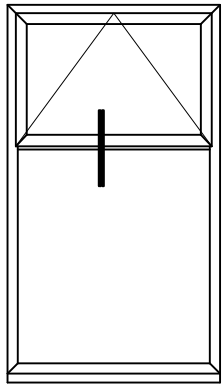

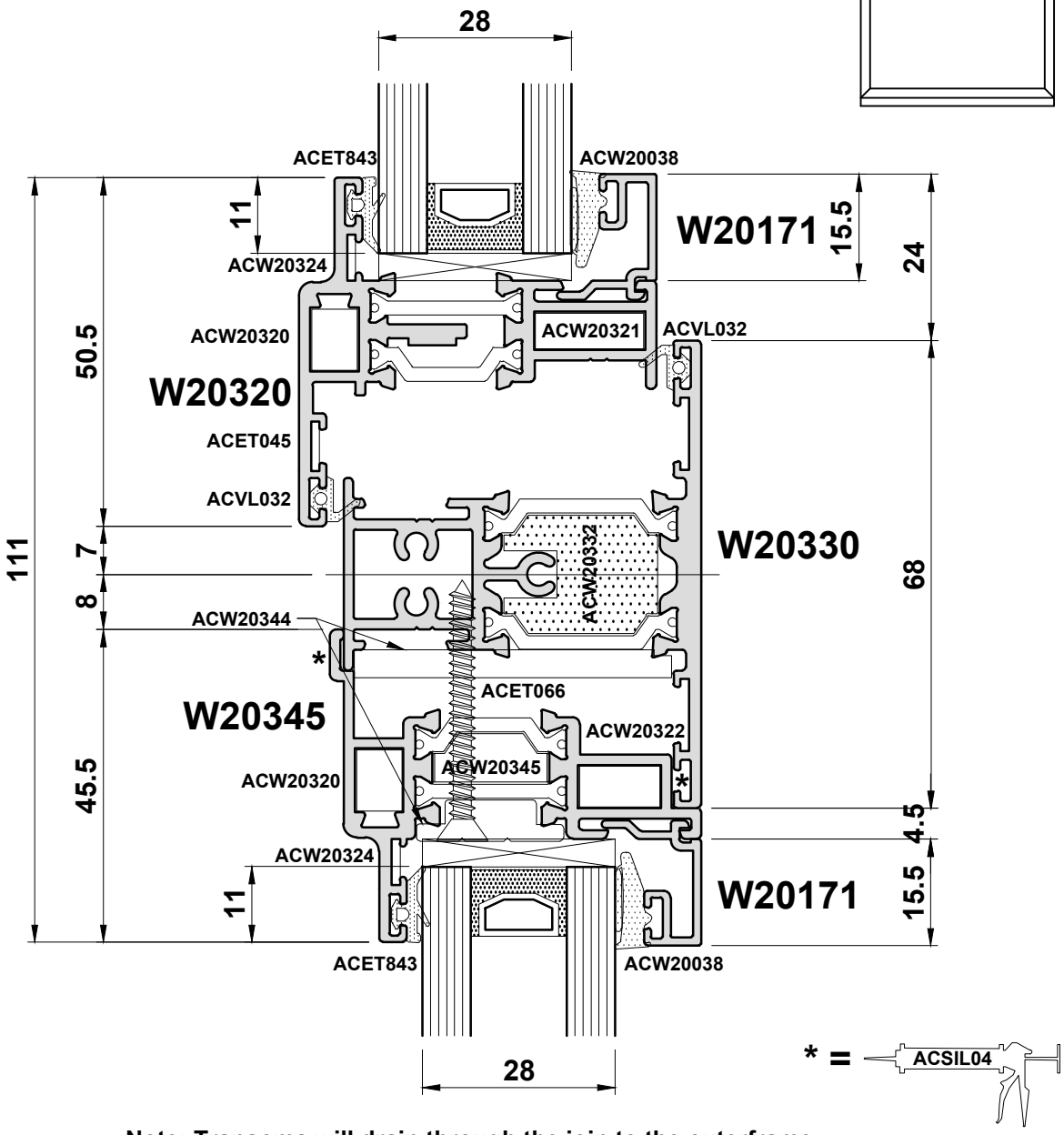

Note: Transoms will drain through the join to the outerframe.

Do Not Scale From This Drawing

Detail 14

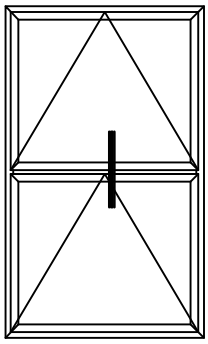

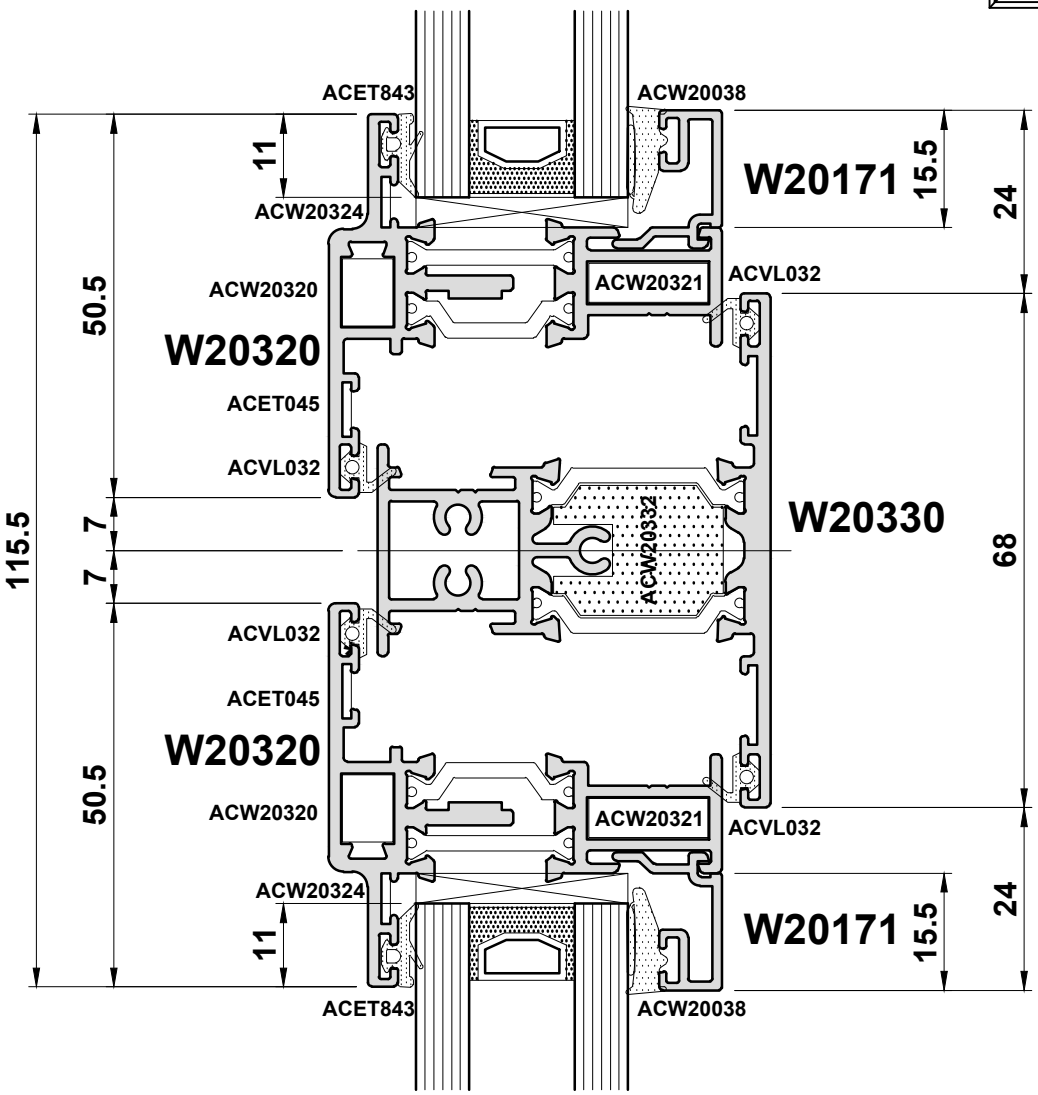

Note: Transoms will drain through the join to the outerframe.

Do Not Scale From This Drawing

ISSUED : AUGUST 2020

Alitherm Heritage HD

Detail 15A

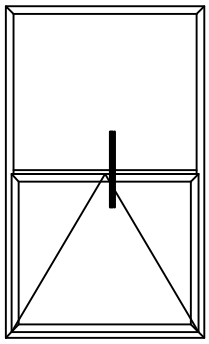

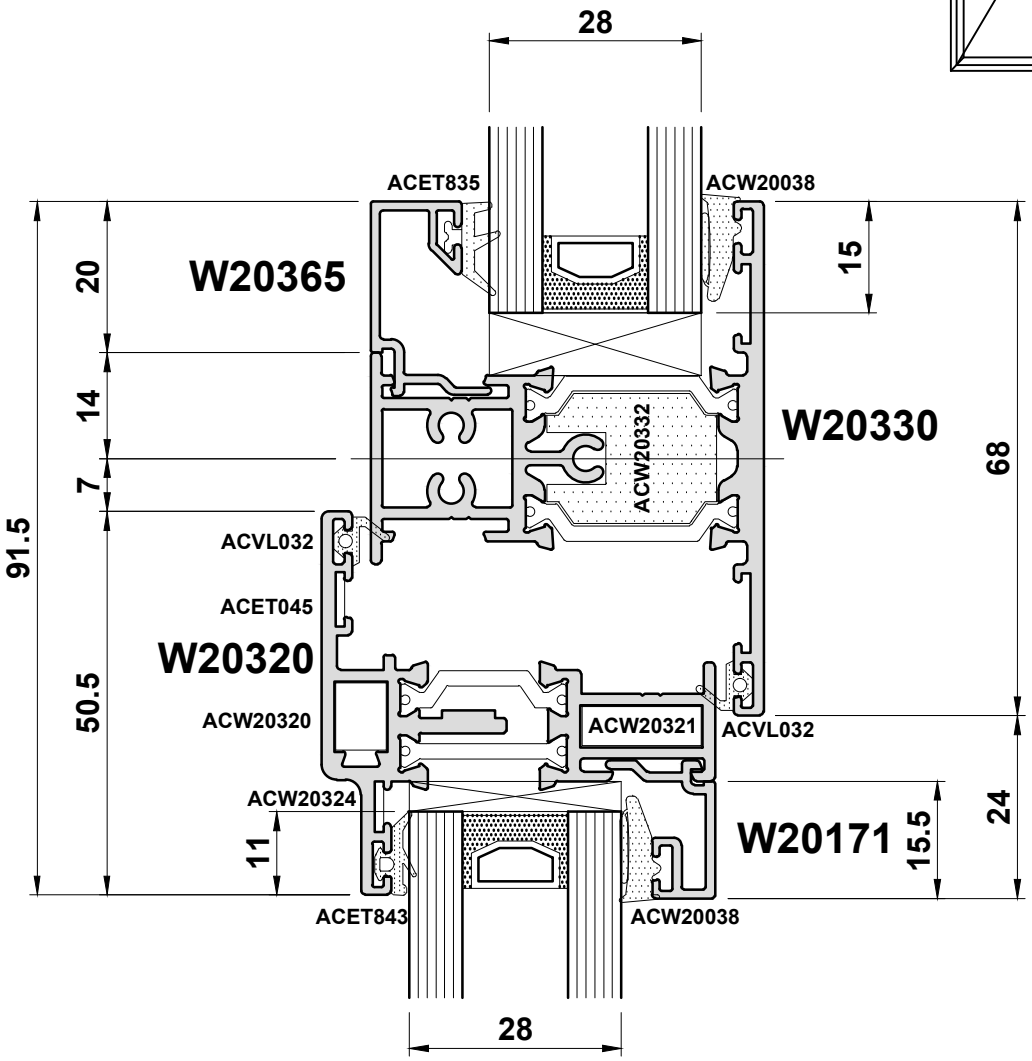

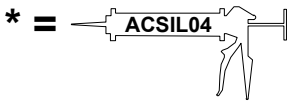

Note: Transoms will drain through the join to the outerframe.

Do Not Scale From This Drawing

Alitherm Heritage HD

Detail 15B

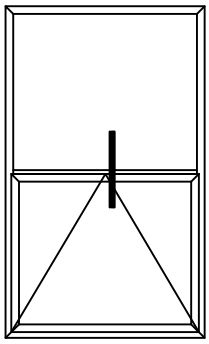

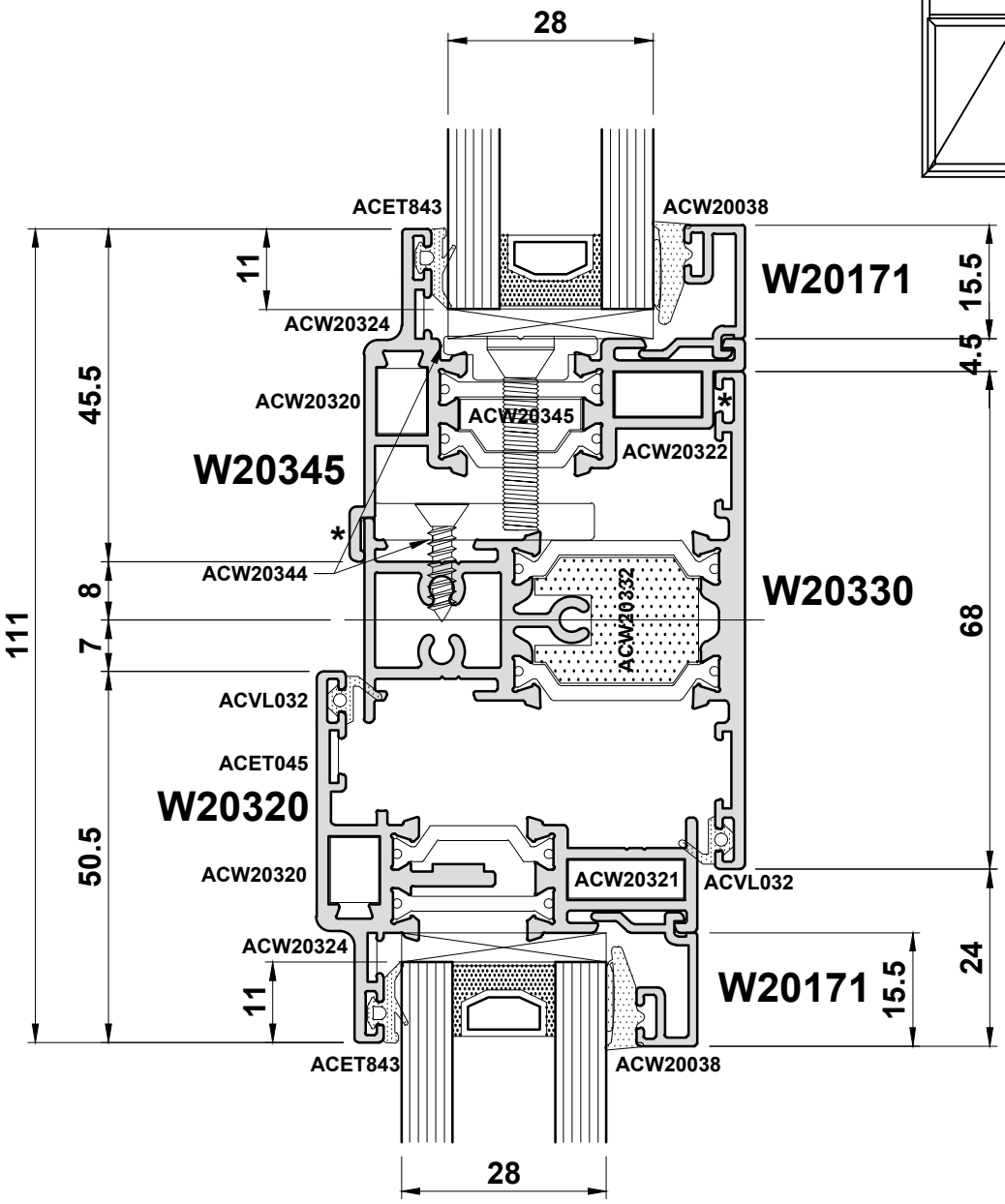

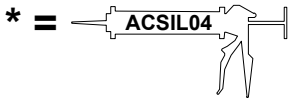

Note: Transoms will drain through the join to the outerframe.

Do Not Scale From This Drawing

ISSUED : AUGUST 2020

Alitherm Heritage HD

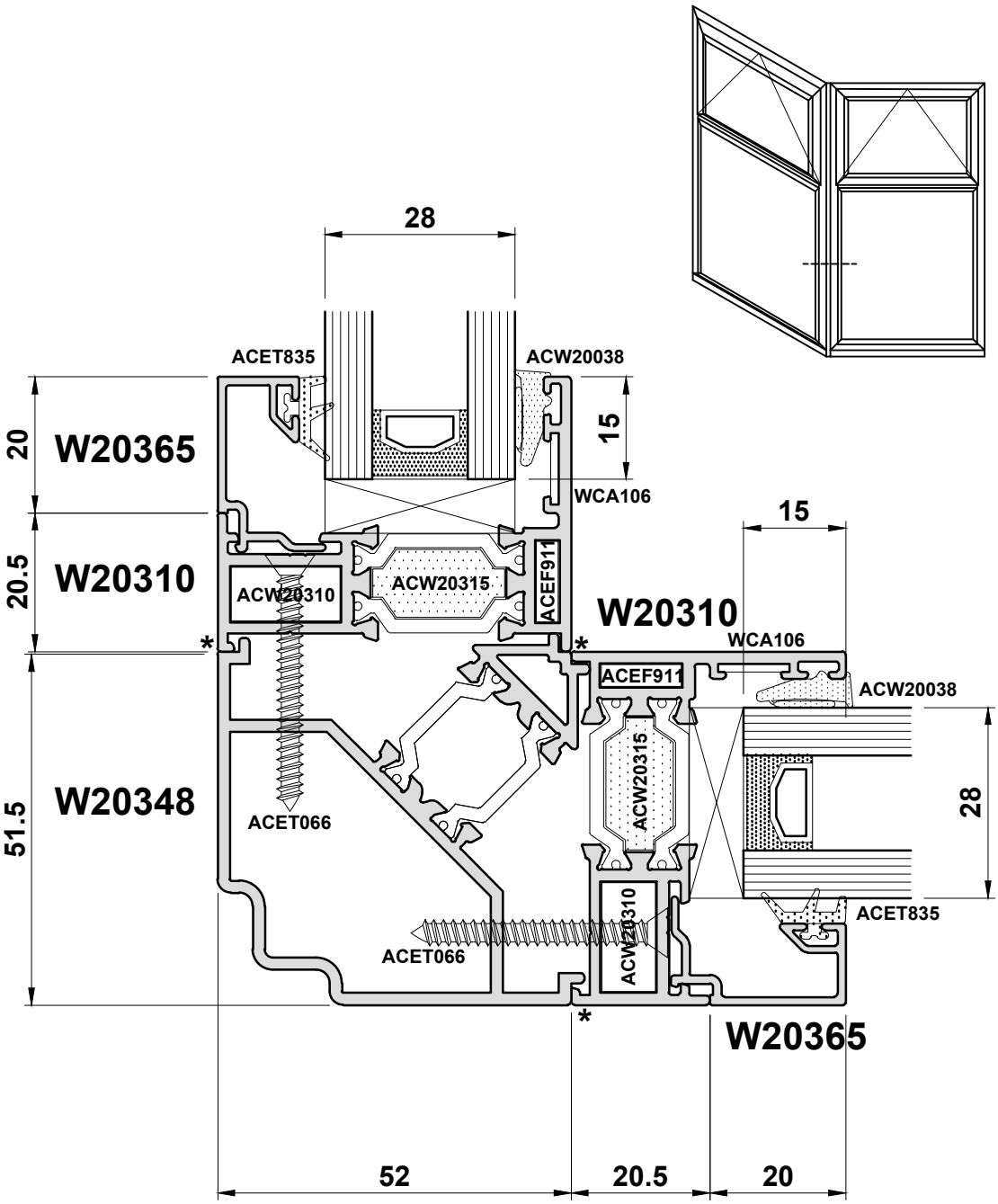

* = ACSIL04

Do Not Scale From This Drawing

Alitherm Heritage HD

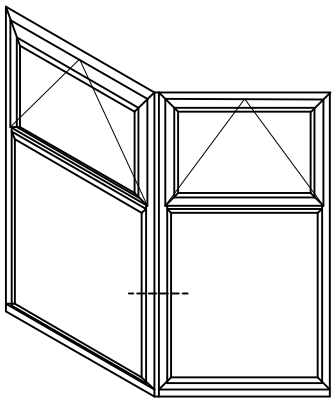

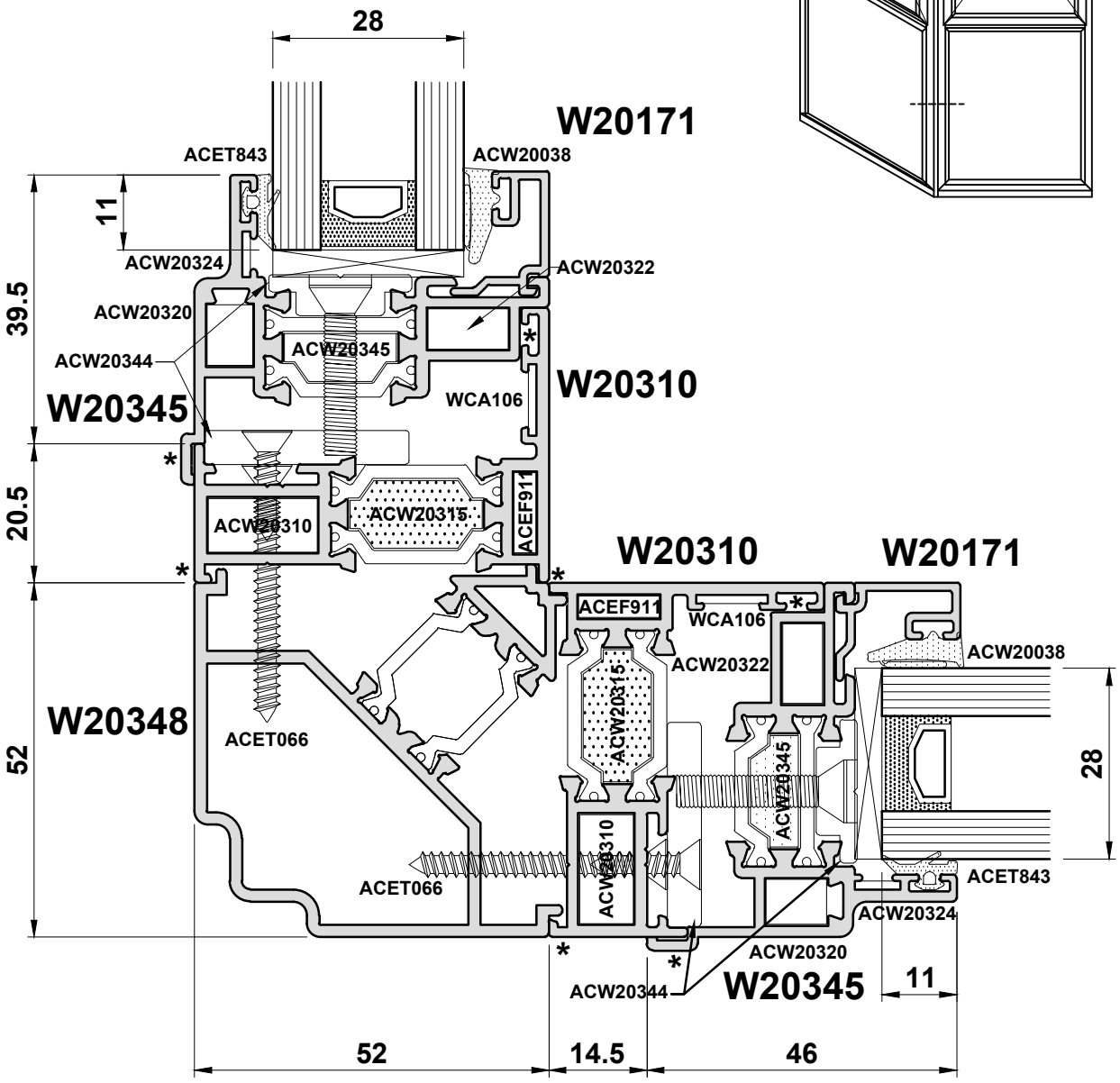

* = ACSIL04

Do Not Scale From This Drawing

ISSUED : AUGUST 2020

Alitherm Heritage HD

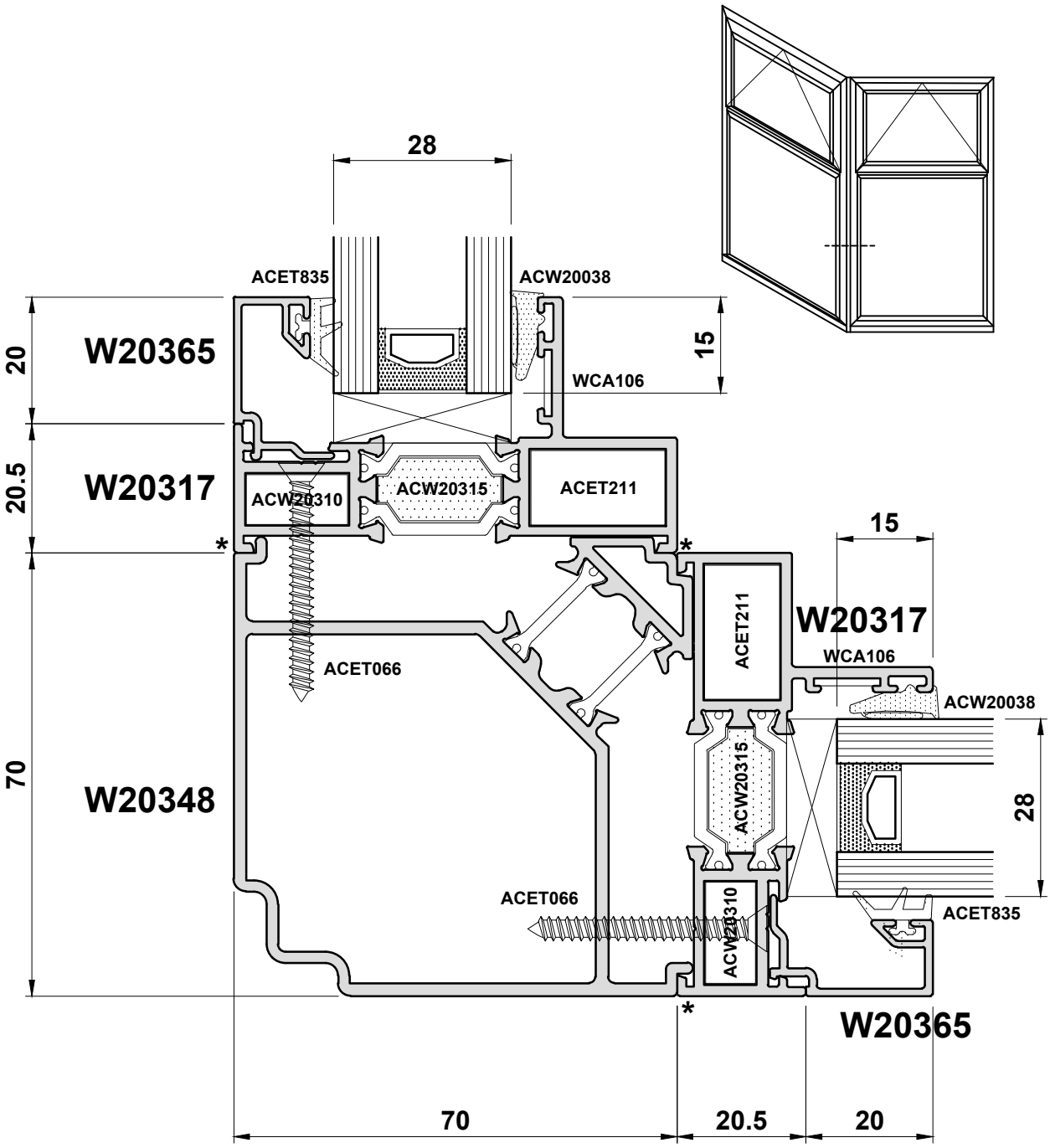

* = ACSIL04

Do Not Scale From This Drawing

Do Not Scale From This Drawing

Section D

Statics

General Size Limitations are shown on Page A02.

For Wind Loading Limitations, Please Contact
The Technical Department - T: 01934 833100

Section E

E W Construction Drawings

Corner Joint Detail..... E03
Crimping Detail..... E04
Drainage Detail..... E05 - E07
Installation of ACW20345 using ACW20344..... E08
Mullion/Transom Detail..... E09 - E10
Friction Stay Detail..... E11 - E12
Lock Detail..... E13 - E14
Peg Stay Detail..... E15
Coupler Detail..... E16
Glazing Chart..... E17 - E18
Bay Pole Detail..... E19 - E20
Fixing Strap Guide..... E21
Example Layout..... E22

Corner Joint Details

Notes

1. Degrease mitre sections
2. Cover mitred faces with ACSIL04
3. Apply ACSIL013 to cleat chamber
4. Apply ACSIL04 to any fractures formed by crimping to make watertight

Table 1

KL Colour	Sealant Part Number
Black	ACSIL04BL
White	ACSIL04WP
Clear	ACSIL04CL
KL001	ACSIL04KL001
KL002	ACSIL04KL002
KL003	ACSIL04KL003
KL004	ACSIL04KL004
KL005	ACSIL04KL005
KL006	ACSIL04KL006
KL007	ACSIL04KL007
KL010	ACSIL04KL010
KL011	ACSIL04KL011
KL012	ACSIL04KL012
KL013	ACSIL04KL013

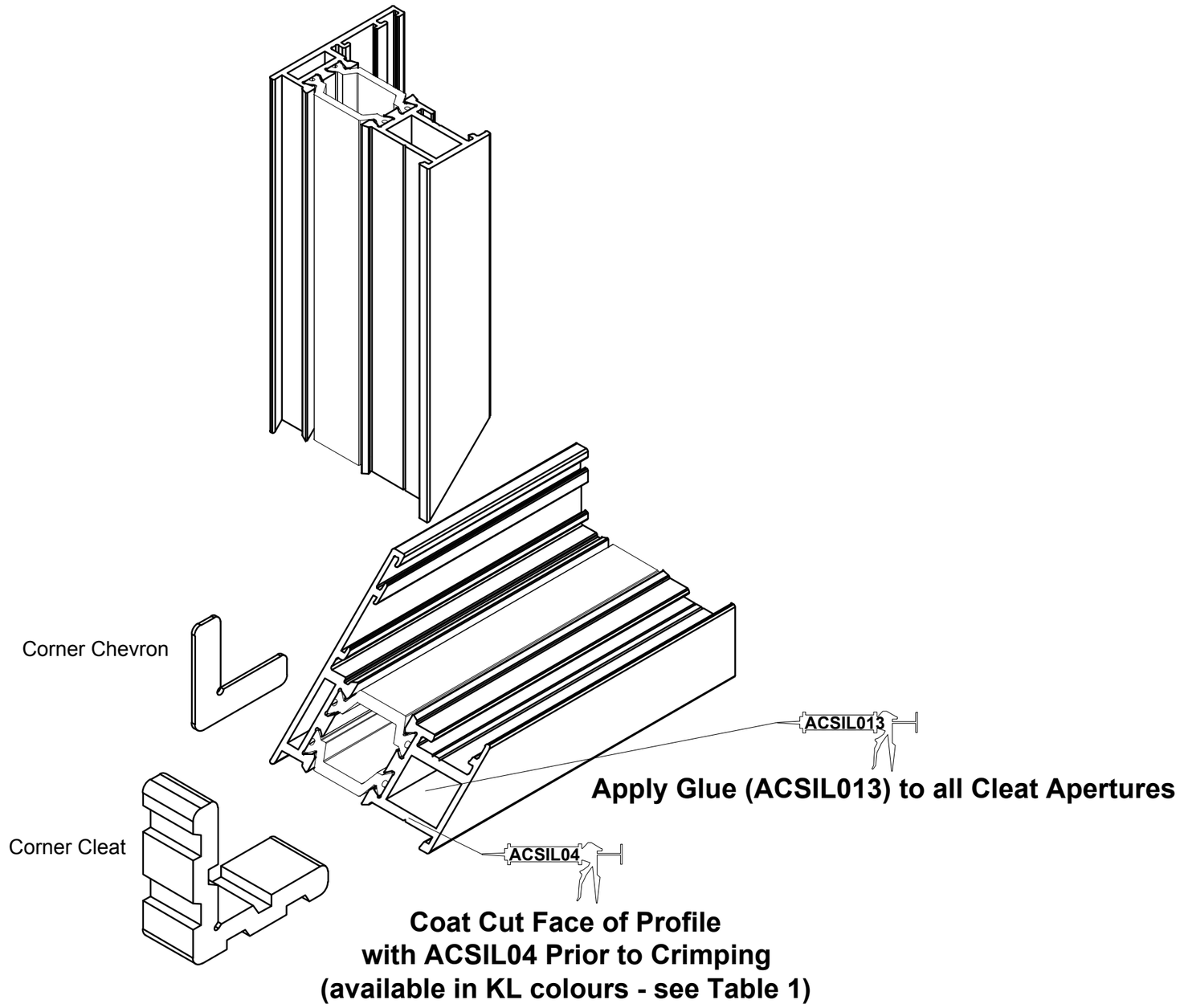

Do Not Scale From This Drawing

Crimping Detail

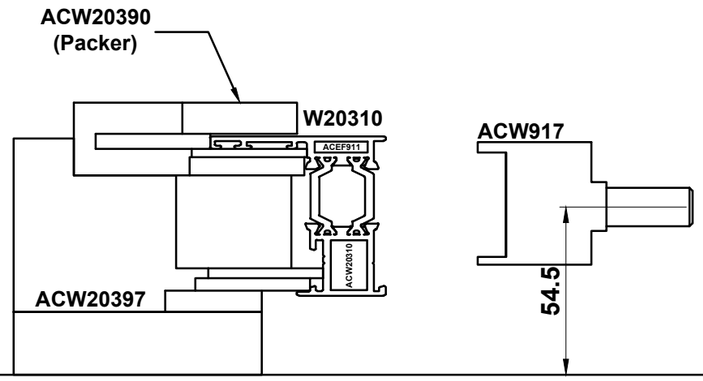

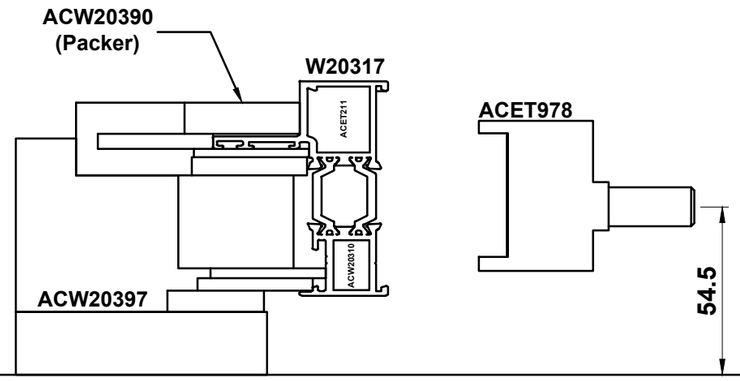

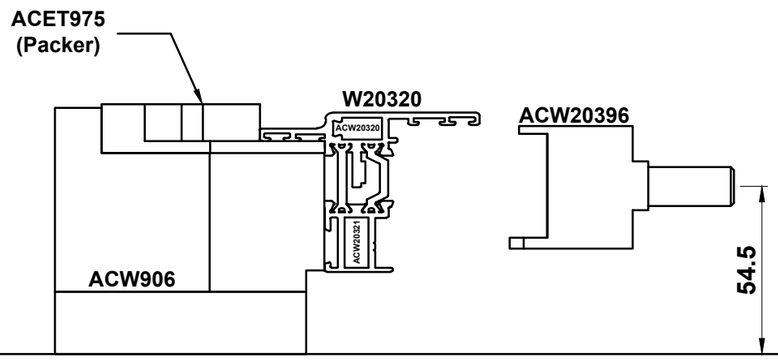

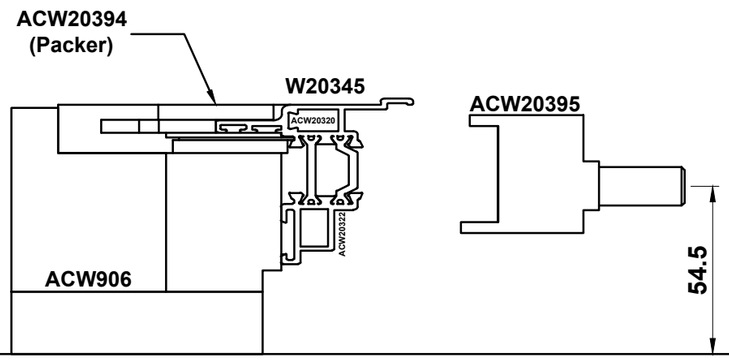

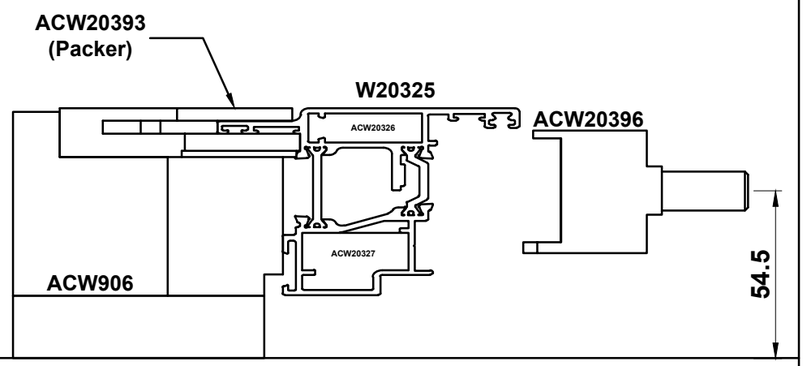

Do Not Scale From This Drawing

Drainage Details

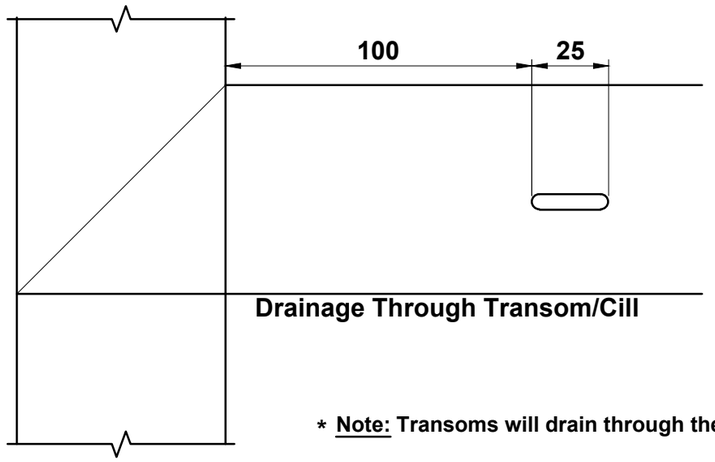

Drainage Through Transom/Cill

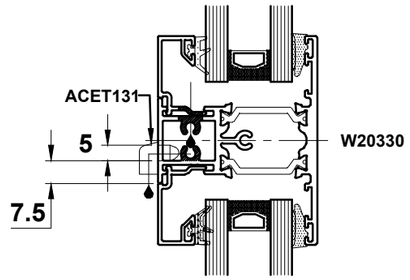

Transom Fixed Light*

* **Note:** Transoms will drain through the join to the outerframe.

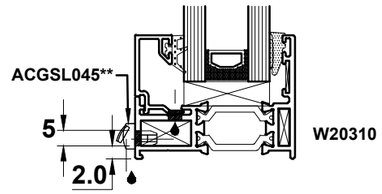

Outerframe without cill

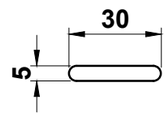

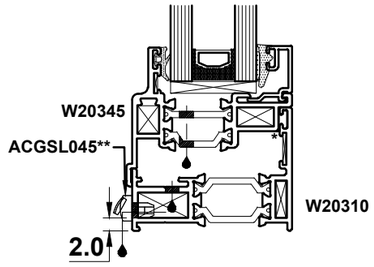

Outerframe with reverse adaptor

**ACGSL045 must be used here as water drains through the front of the cap.
ACGSL045 may also be used throughout the system.

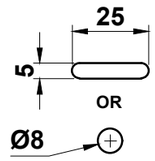

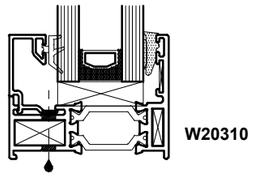

Outerframe with cill

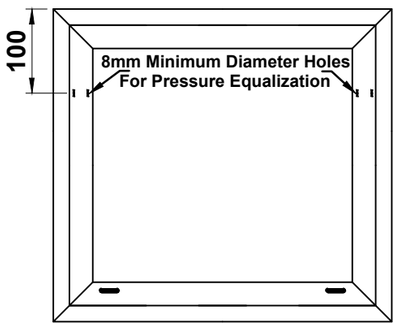

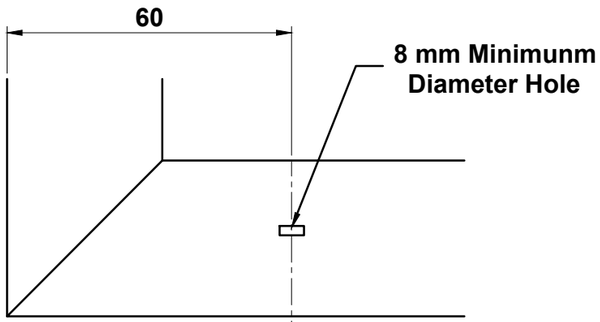

Concealed Drainage Through Vent

Important Note: All exposed aluminium should be coated using ACSIL014 or painted to match the frame.

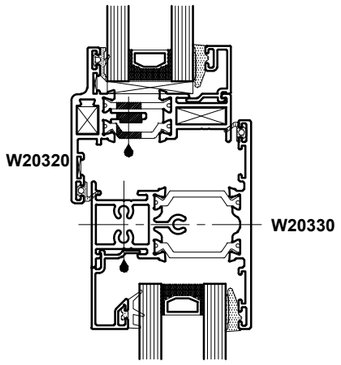

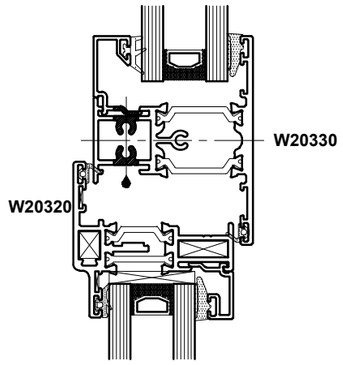

Note: Transoms will drain through the join to the outerframe.

Do Not Scale From This Drawing

Sub Cill Drainage

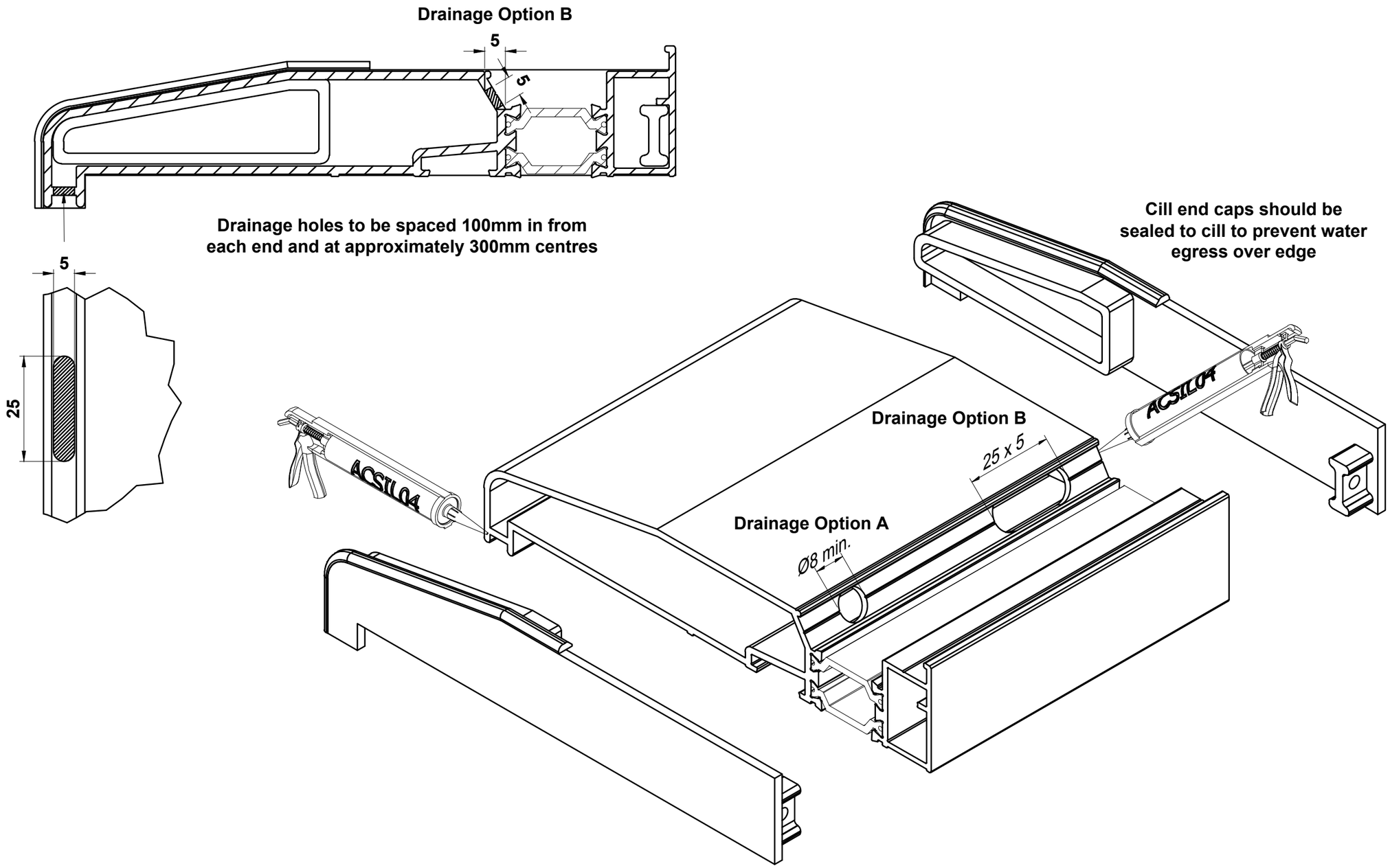

Do Not Scale From This Drawing

Angled Sub Cill

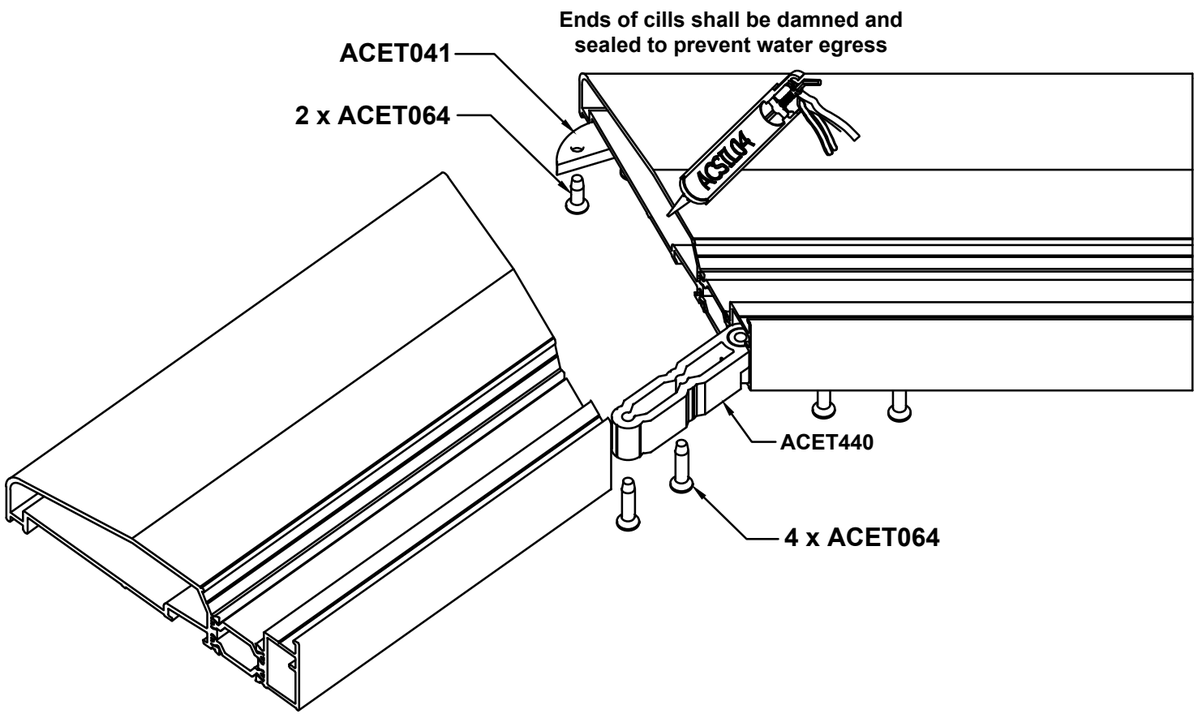

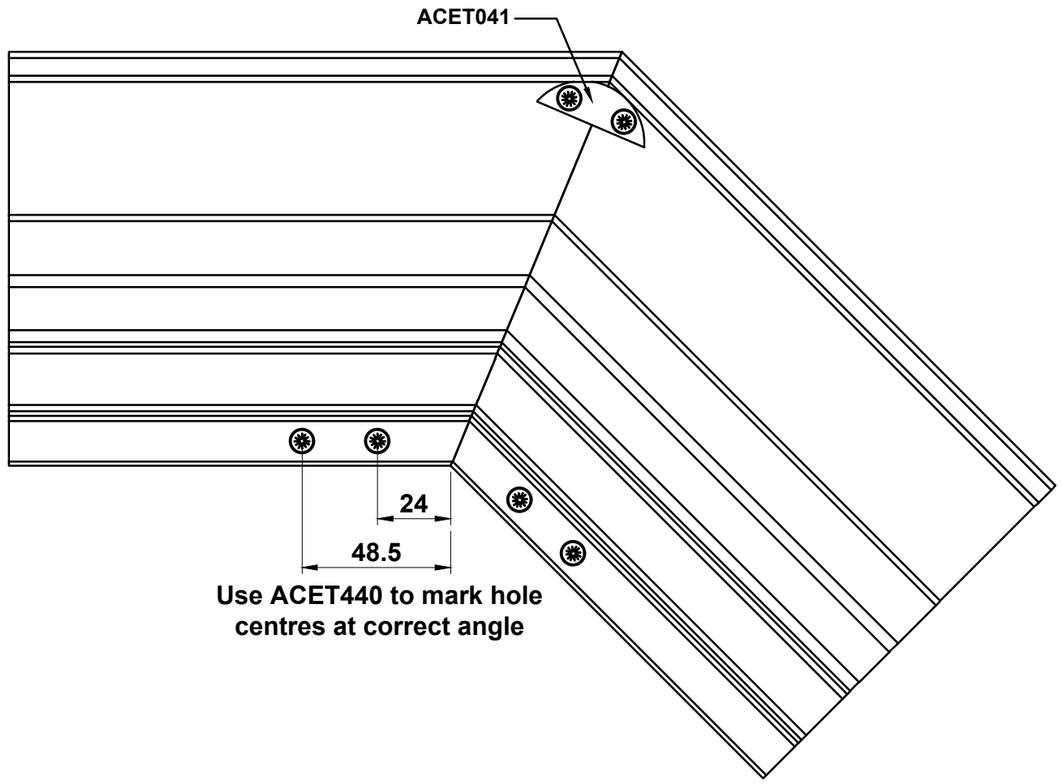

Do Not Scale From This Drawing

Installation of W20345 using ACW20344

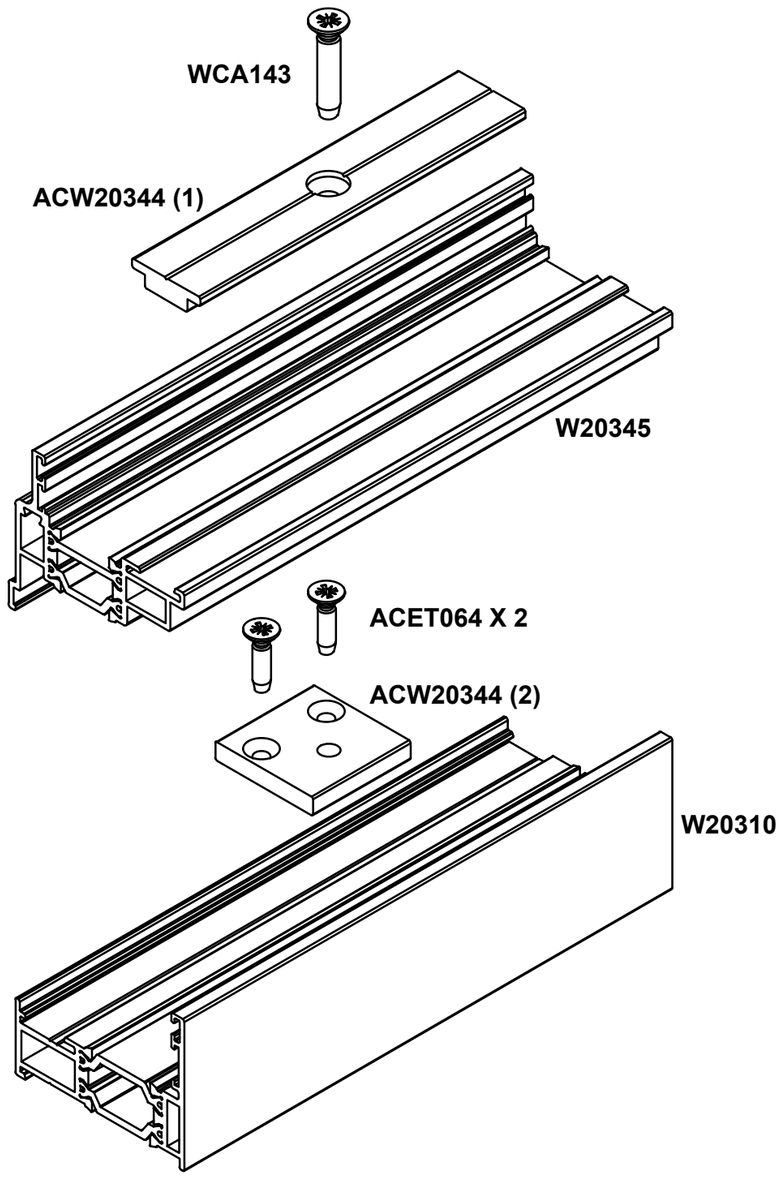

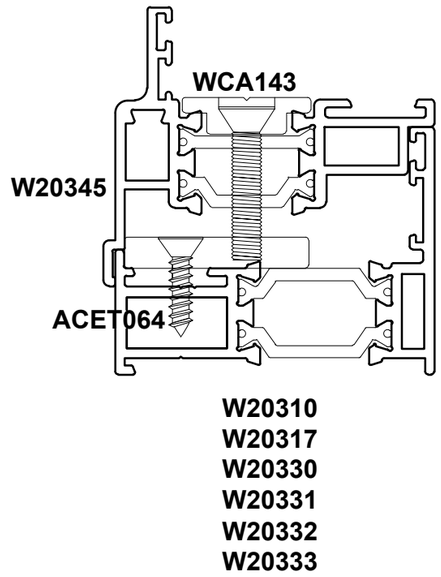

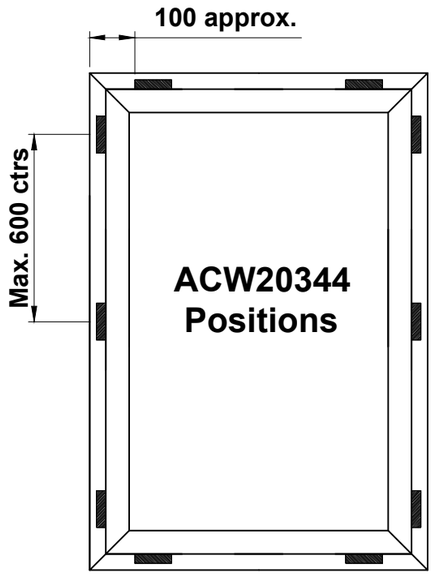

Steps on how to fix Outerframe/Mullion to W20345 using ACW20344:

1. Butt ACW20344 (2) up to where W20345 meets the outer frame (mullion/transom) as shown in the drawing.
2. Use 2 x ACET064 to fix ACW20344 (2) to outer frame.
3. Use WCA143 machine scew to fix ACW20344 (1) into ACW20344 (2).

Do Not Scale From This Drawing

Mullion/Transom Detail

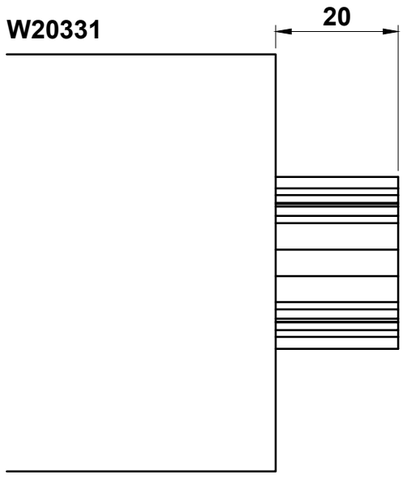

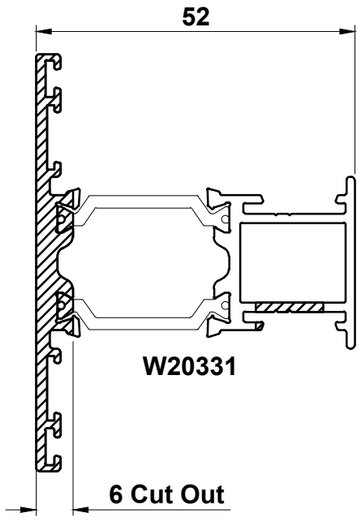

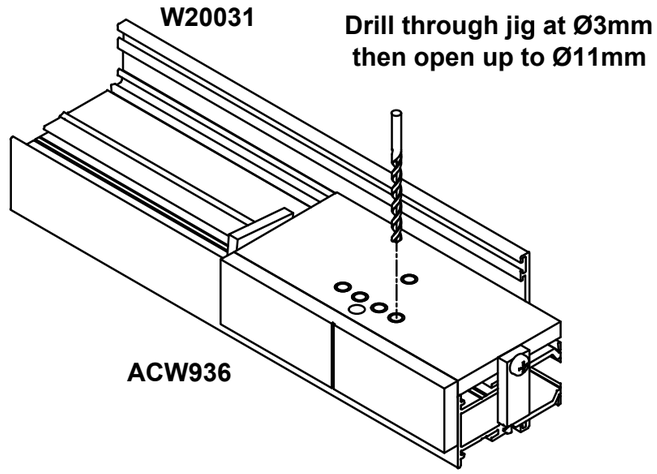

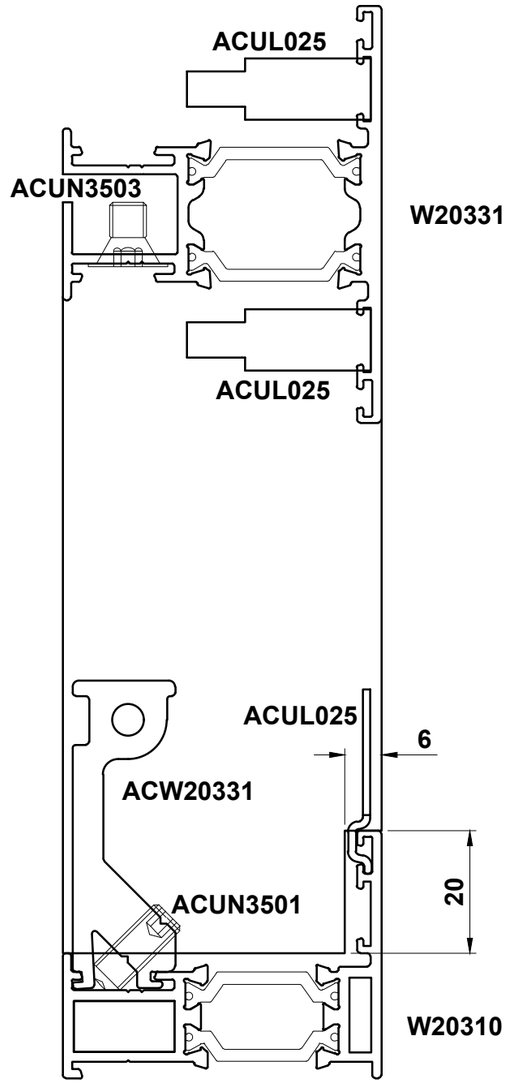

Note:

End mill cutters can be ordered through Smart Systems Ltd. Please contact the Technical Department for an order form. Standard delivery is 2-3 weeks approx.

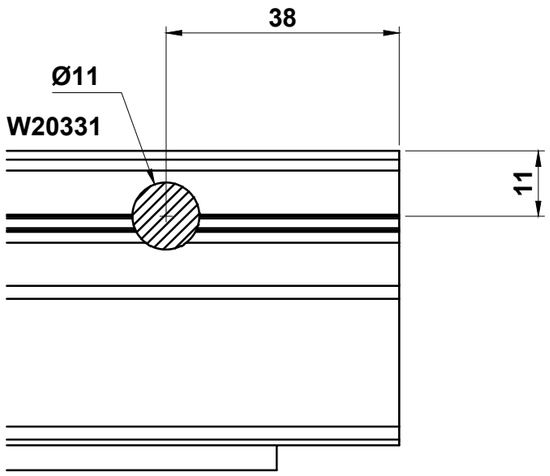

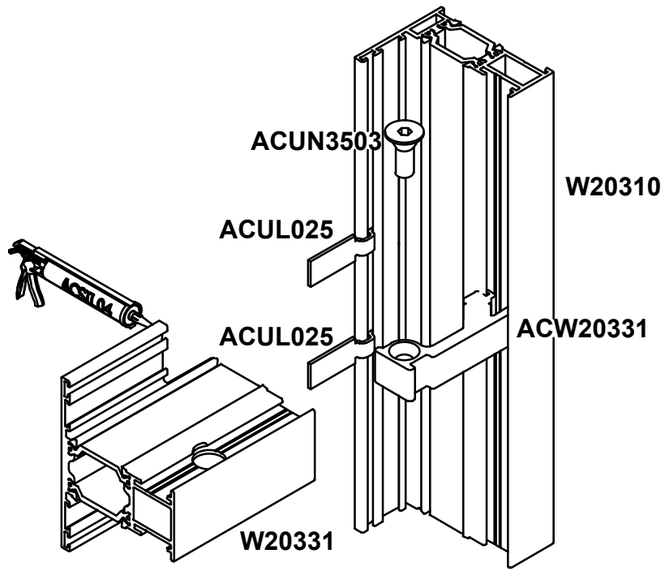

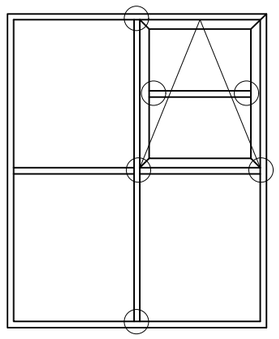

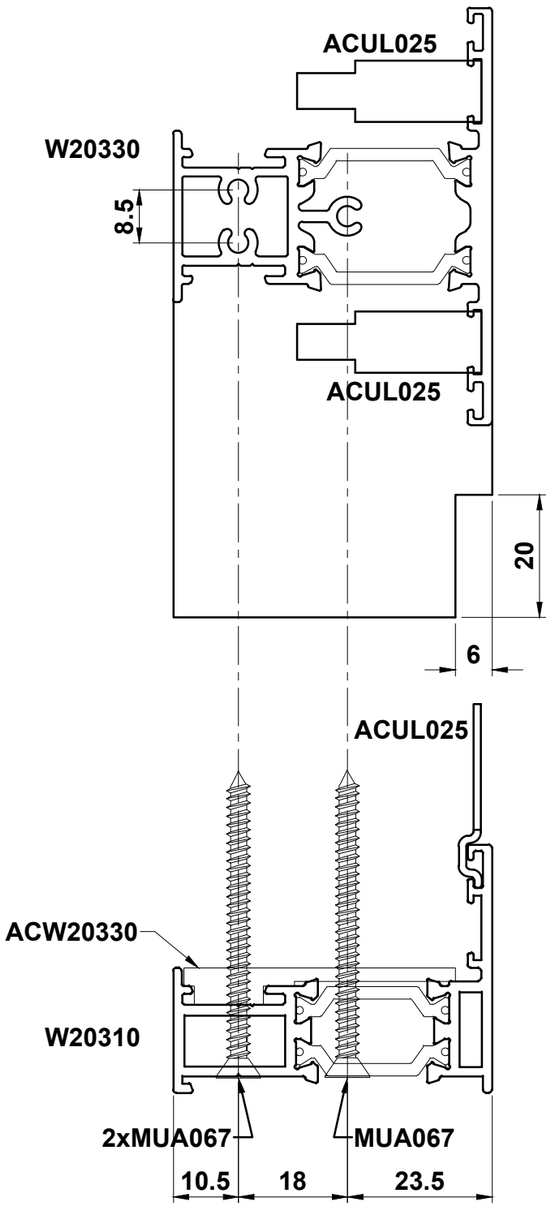

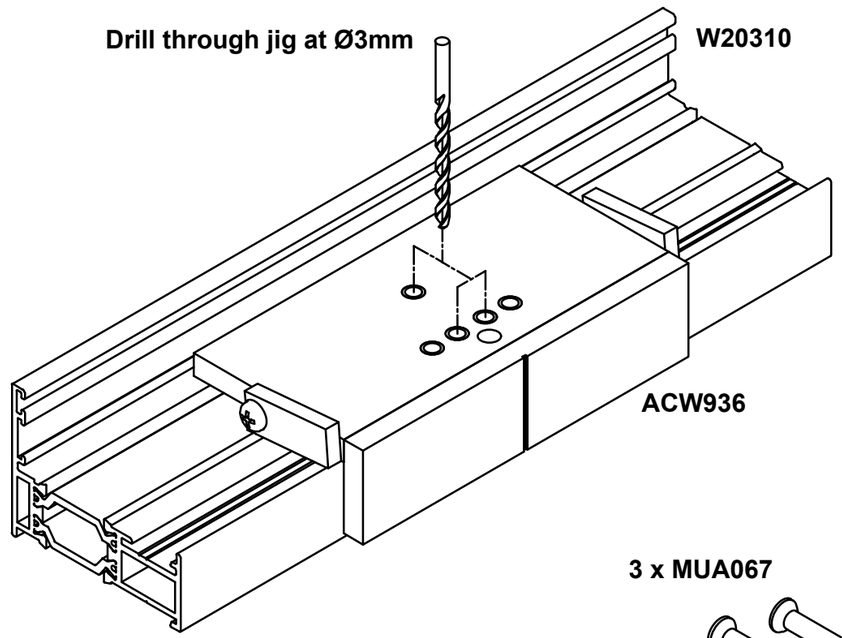

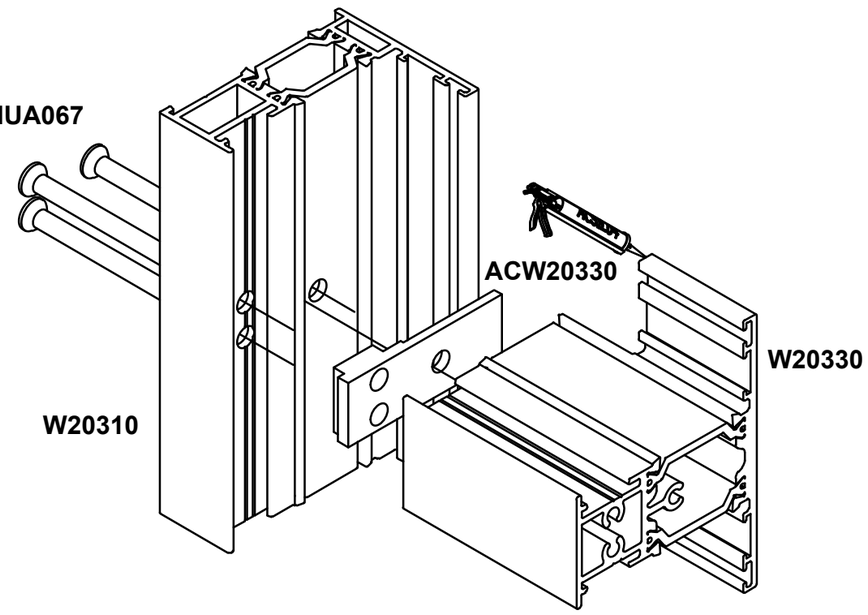

Please allow 3 weeks for delivery of this end mill cutter. When ordering, please specify:

1. **The make/model of end miller**
2. **Spindle Diameter**
3. **Maximum Cutter Diameter**
4. **Rotation Direction**
5. **Quantity of arbours, if required.**

Do Not Scale From This Drawing

Friction Stay Accessories

Vent Sizes 450mm or Smaller to be Reduced by 2mm

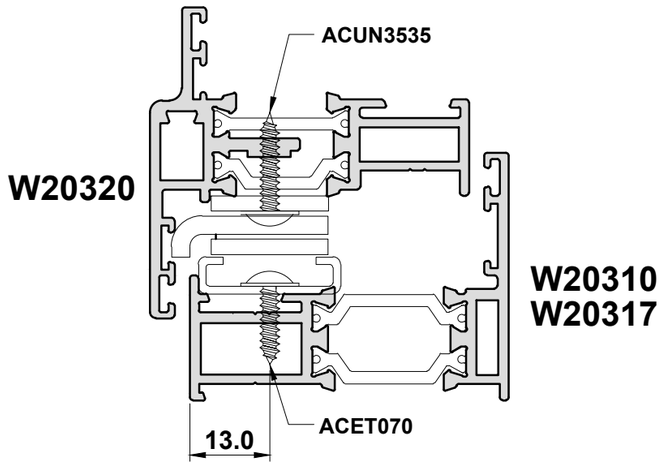

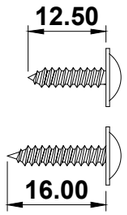

ACET070 = Recommended screw for fixing stay to outer frame

ACUN3535 = Recommended screw for fixing stay to sash

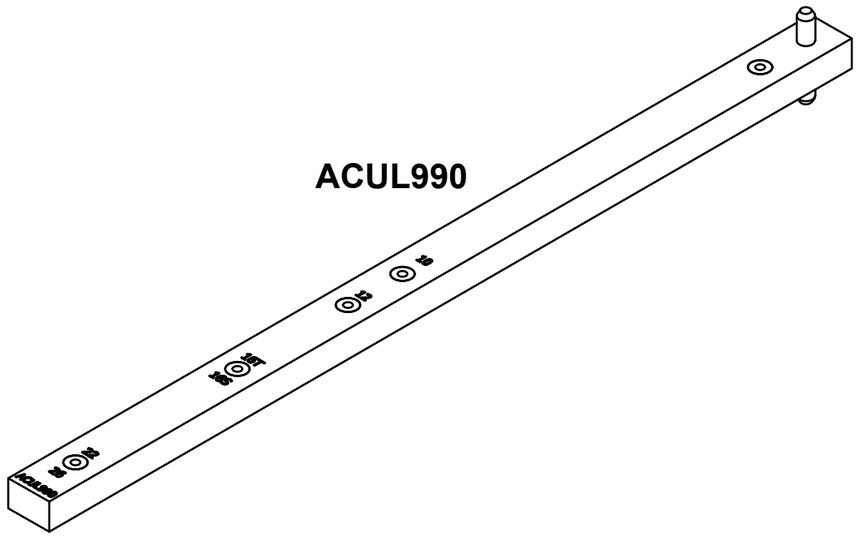

Heavy Duty (Sterling) Stays

Hinge Code Top Hung	Hinge Length (mm)	Max Vent Weight (kg)	Min Vent Height (mm)	Max Vent Height (mm)	Opening Angle (+/-2.5°)
ACINS10	262	40	315	640	50
ACINS12	313	50	640	800	50
ACINS16	415	65	800	1100	50
ACINS22	567	100	1090	1500	45
ACINS22W	567	100	1500	2000	20
ACINS26	680	180	2000	2500	20
Side Hung	**Hinge Length (mm)**	**Max Vent Weight (kg)**	**Min Vent Width (mm)**	**Max Vent Width (mm)**	**Opening Angle (+/-2.5°)**
ACINSSH10	262	38	327	660	85
ACINSSH16	415	55	450	838	60

Please Note:

1. Dimensions shown in table are sash sizes - not rebate sizes.
2. The minimum sash sizes for ACINS10 & ACINSSH10 can both be reduced to 281mm where cockspur handles are used.
3. Top hung height & side hung width sizes to be reduced by 2mm where size is 450mm or smaller.
4. Vents of 100kg must be fitted with ACINS09 cam adjustment devices, which are optional on lighter vents
5. Separate restrictors (ACINS30 & ACINS31) vent holding devices may be required to hold large vents in a selected ventilation position against variable wind pressure.

Do Not Scale From This Drawing

Hinge Protectors & Pull In Blocks

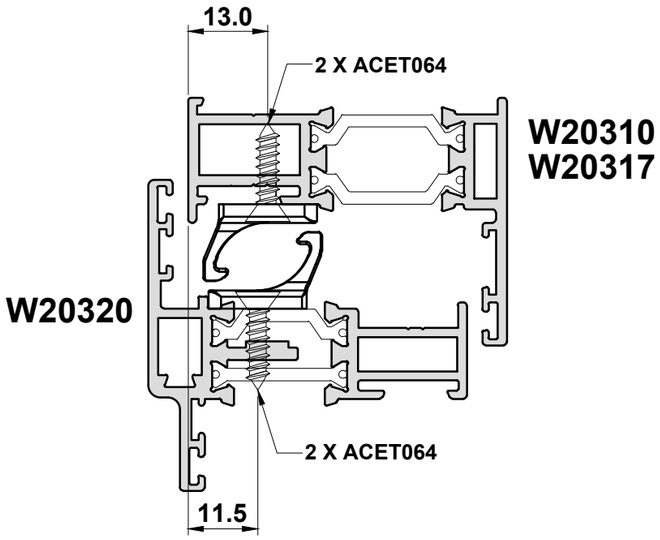

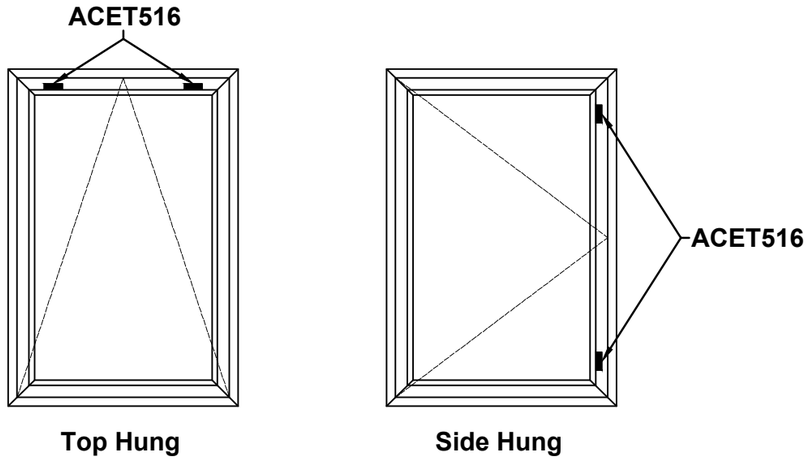

Please Note:

- 2 pairs per opening vent to be fitted to hinged side of window
- Each pair must be fitted with the hook centre within 100mm of each hinge

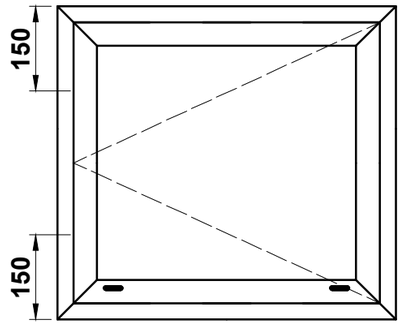

Please Note:

- 2 pairs per opening vent to be fitted to hinged side of window
- Each pair must be fitted with the wedge centre within 150mm of each hinge and in the centre of the window when sash height is greater than 800mm.

ACET516
Scale 1:1

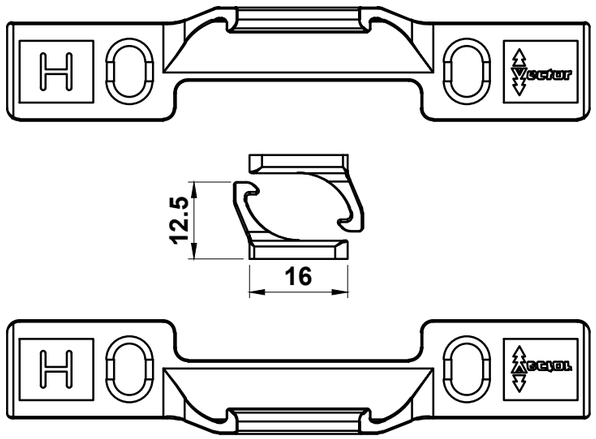

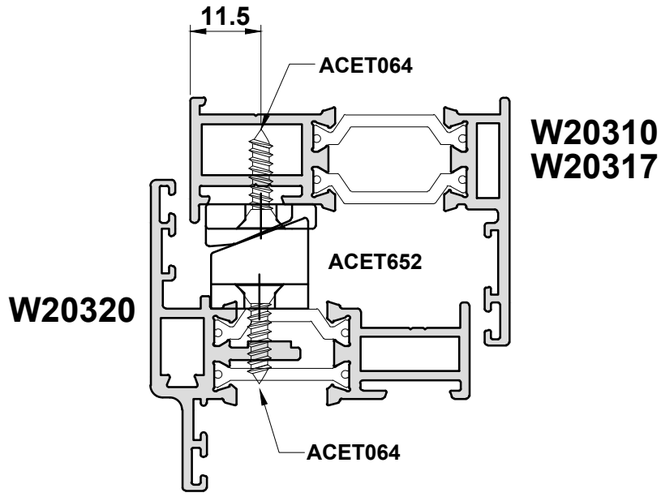

Do Not Scale From This Drawing

Espag Locking Details with ACSM002L using ACW20229

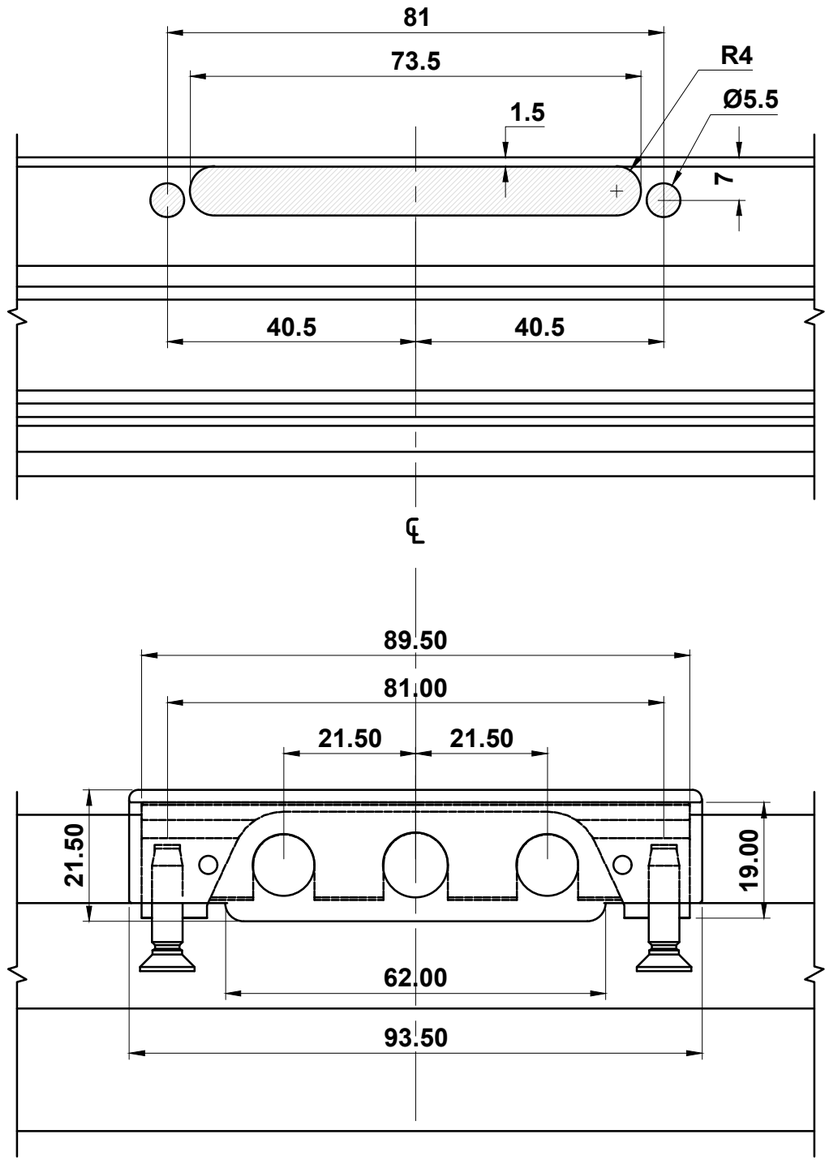

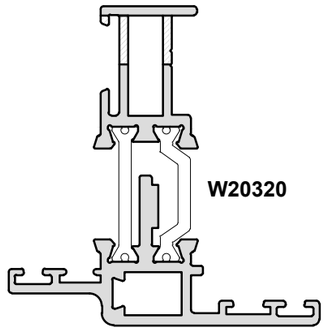

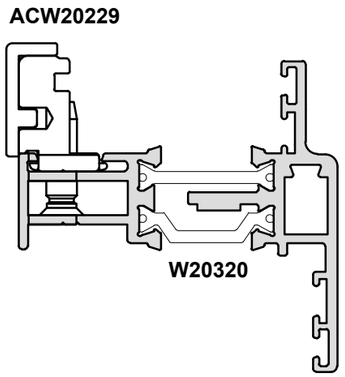

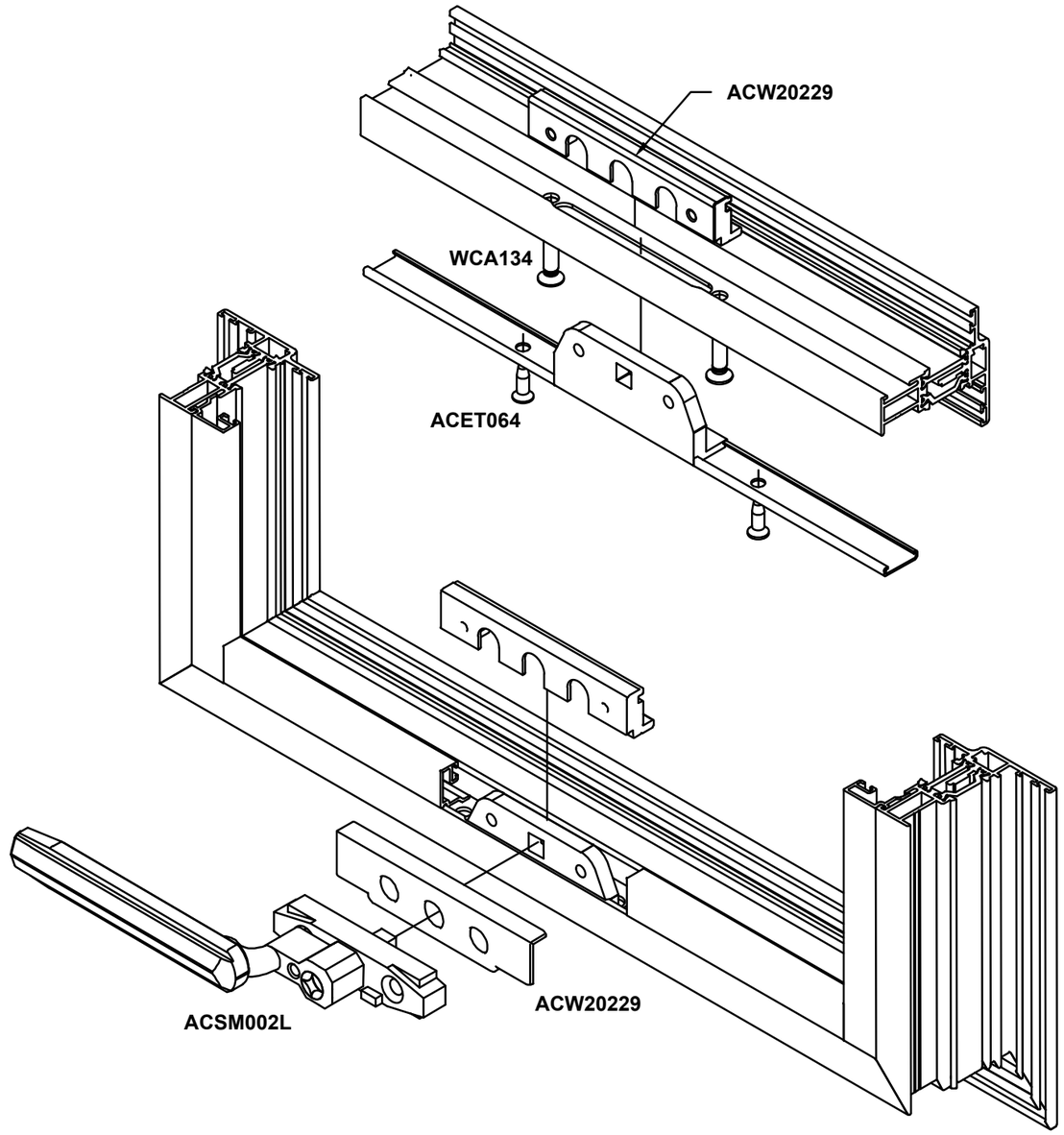

Do Not Scale From This Drawing

Espag Locking Details with ACET460, ACW20100 Monkey Tail & ACW20101 Bulb End Handles

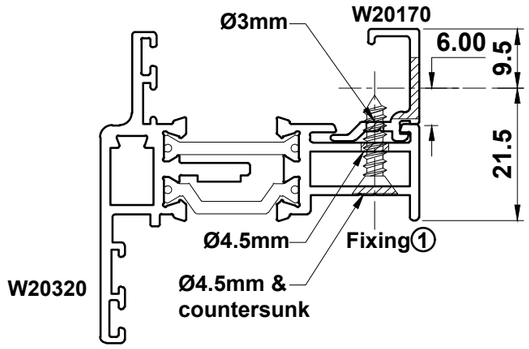

ACET460 Handle Prep

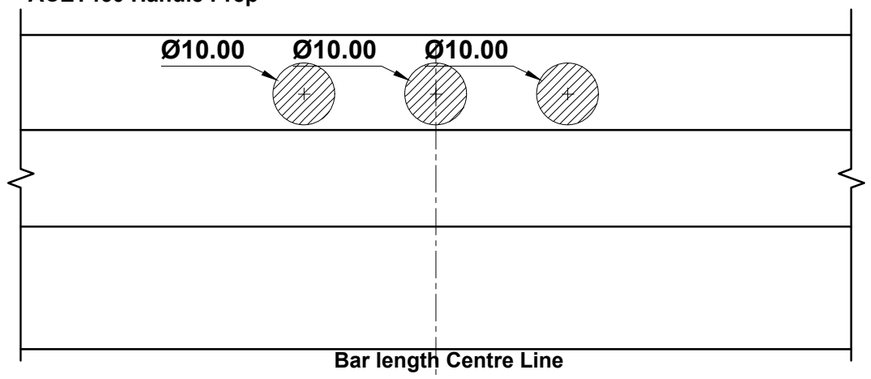

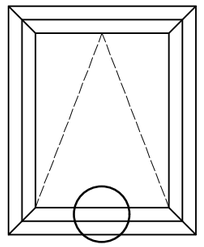

Steps:

1. Cut bead to length and align centre of bead with centre of sash
2. Secure bead into sash using ACET064 screws as shown (Fixing 1) ensuring the bead cannot move
3. Route and drill for lock and handle
4. Remove bead and assemble sash
5. Refit bead and secure at a minimum of 300mm centres
6. Fit espag locking rod and handle.

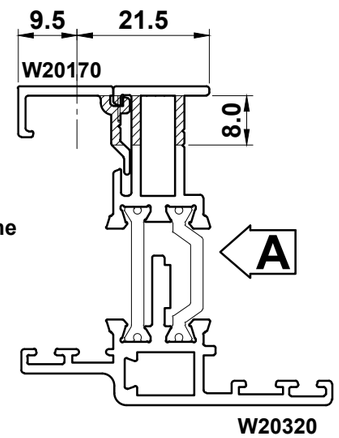

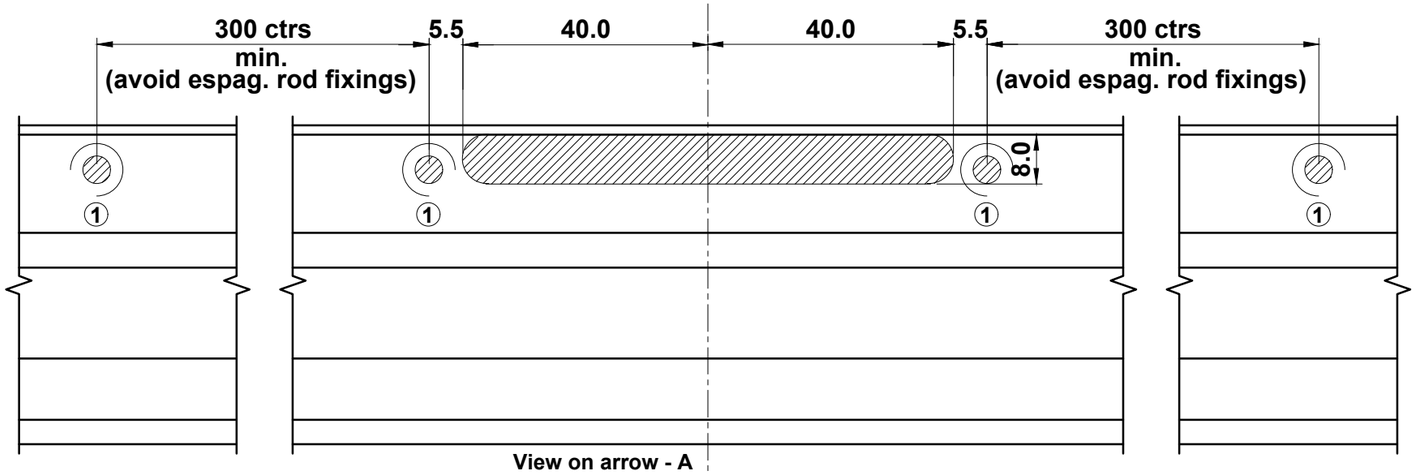

ACW20100 Monkey Tail &
ACW20101 Bulb End
Handle Prep

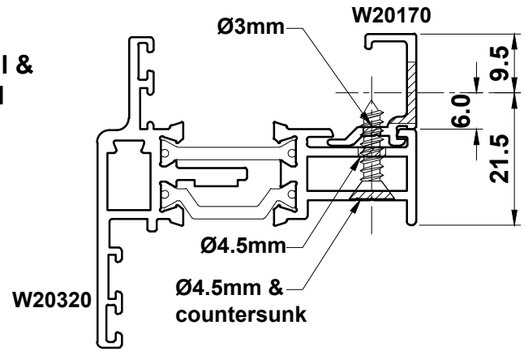

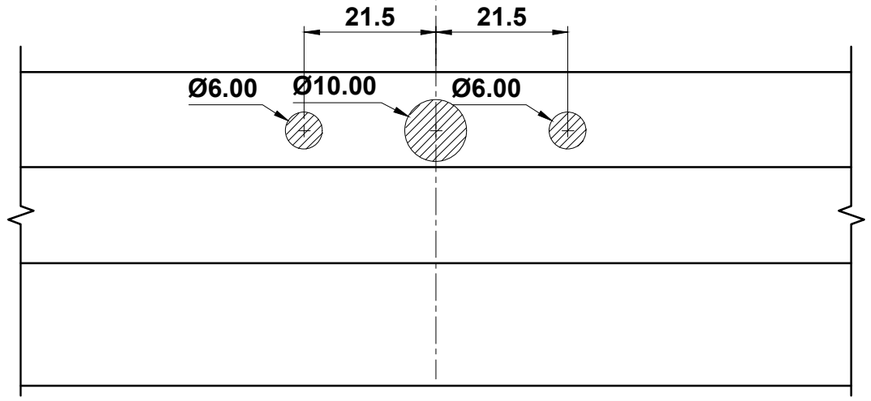

Do Not Scale From This Drawing

Peg Stay Detail

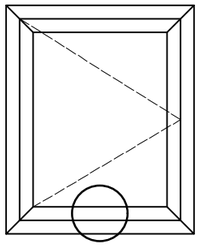

TOP HUNG WITH PEG STAY HAS NOT BEEN TESTED AS ADDITIONAL HANDLE CAN NOT BE FITTED

Typical layout for 10" peg stay

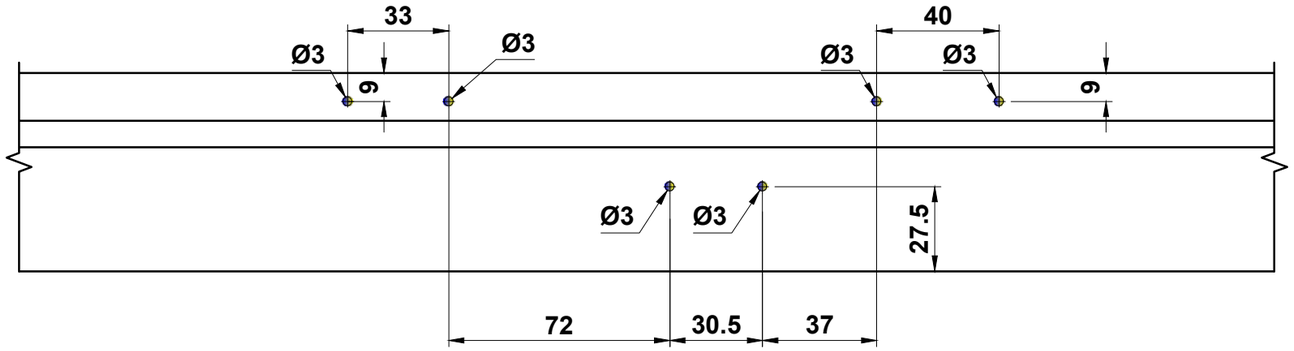

Please use the above dimensions for guidance only.
As each peg stay is hand made, the dimensions will vary slightly.

Monkey Tail Peg Stay

Bulb End Peg Stay

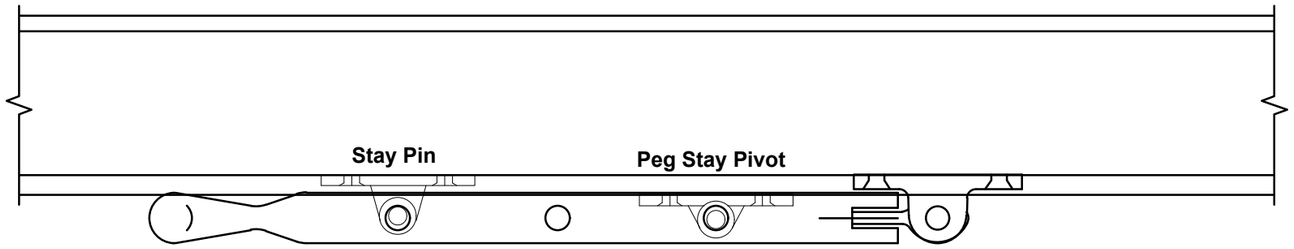

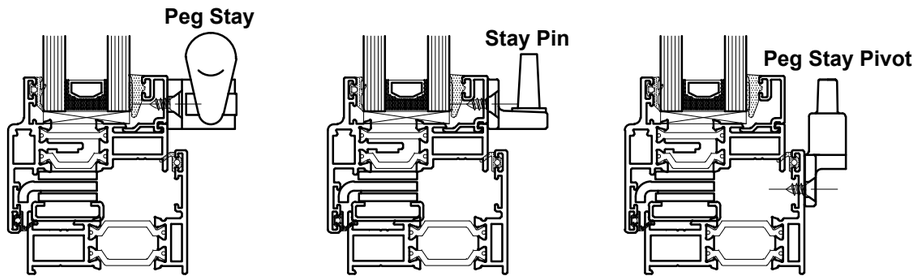

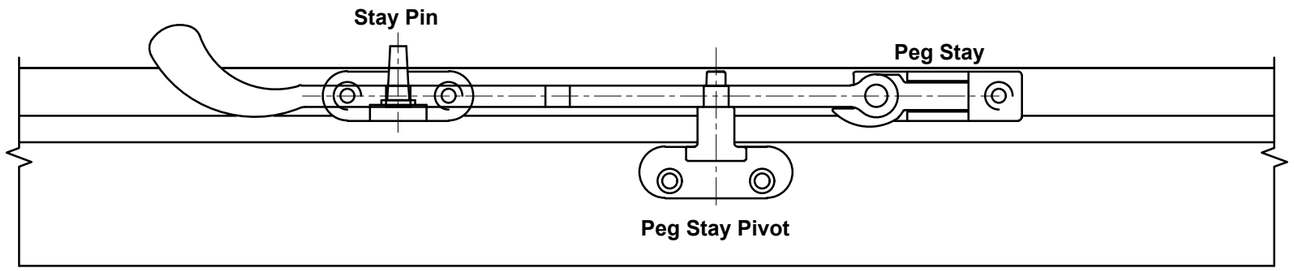

Do Not Scale From This Drawing

W20350 Horizontal Coupler Detail

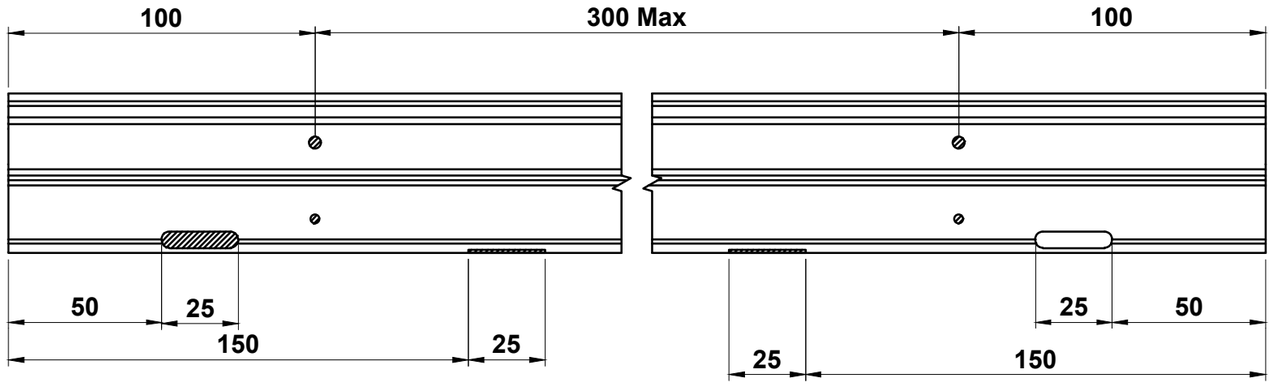

Important Note: Do not screw through drainage channel.

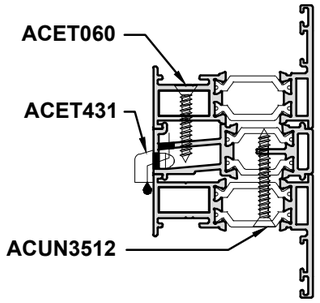

W20310

Zone Drainage of Jamb Cavity

CWCT Built up wall guidance recommends drainage of Jamb Cavity

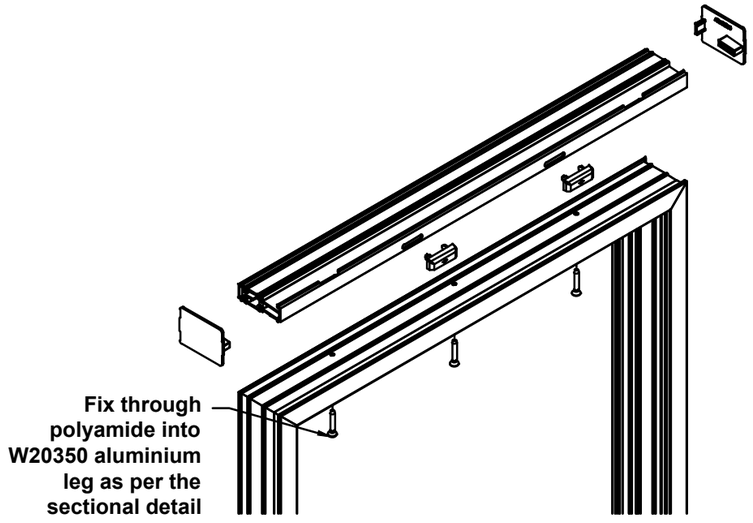

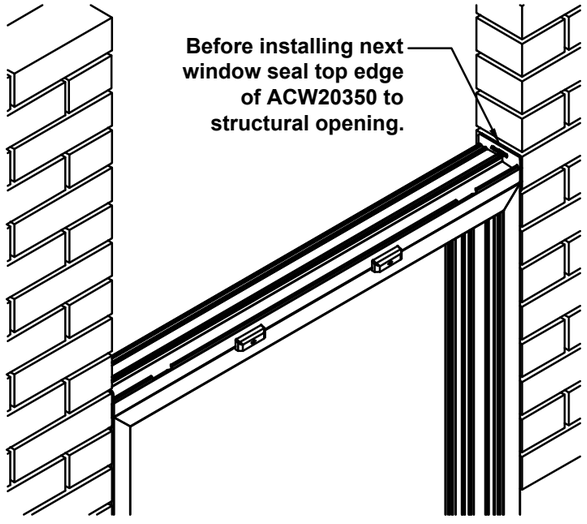

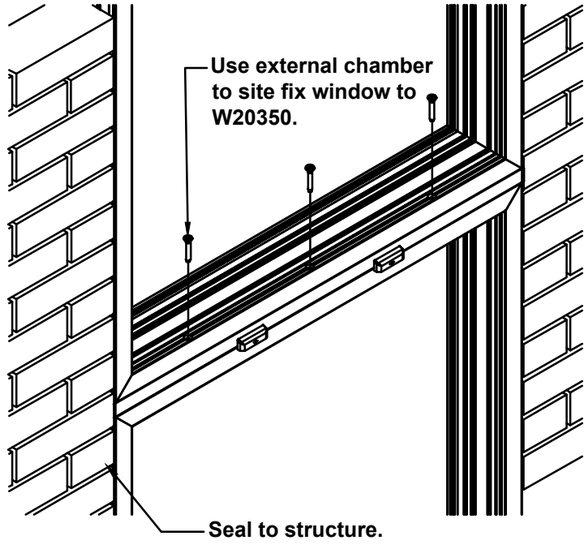

Do Not Scale From This Drawing

Glazing Chart

24mm Glazing

Gasket Glazed

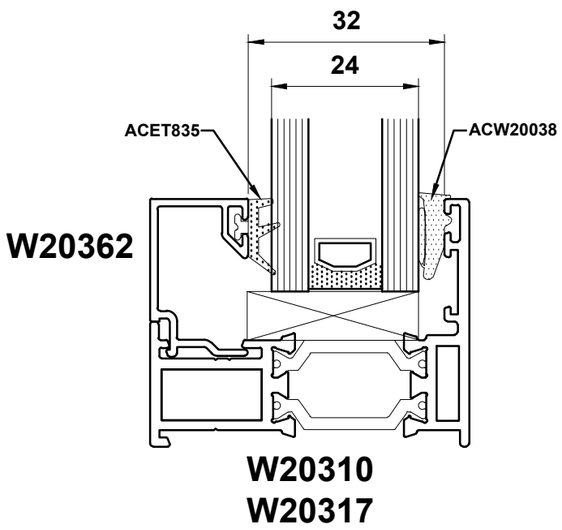

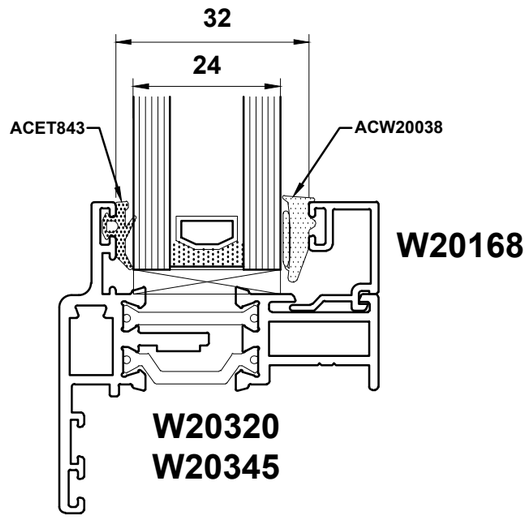

Note: We advise to silicon seal bead in high exposed areas.

28mm Glazing

Gasket Glazed

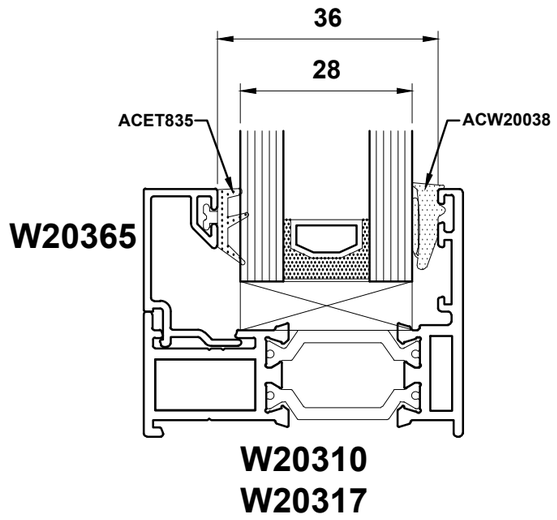

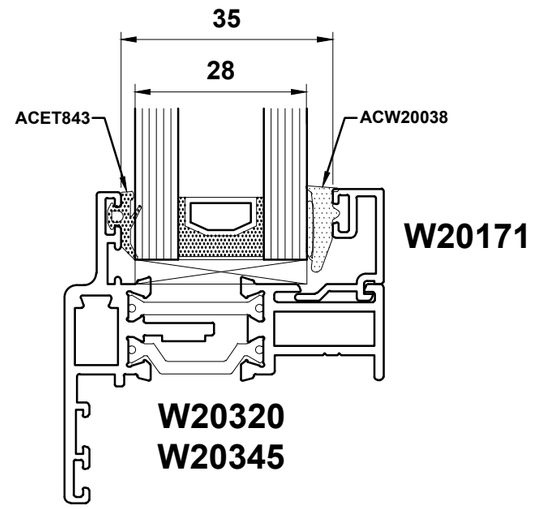

Note: We advise to silicon seal bead in high exposed areas.

Glazing Chart

32mm Glazing

Gasket Glazed

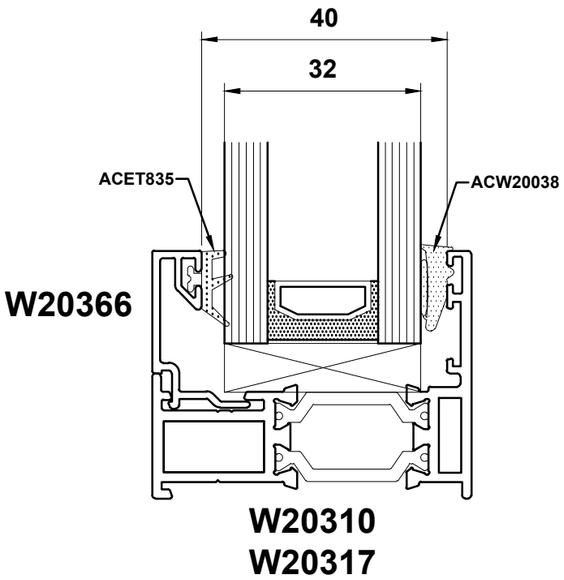

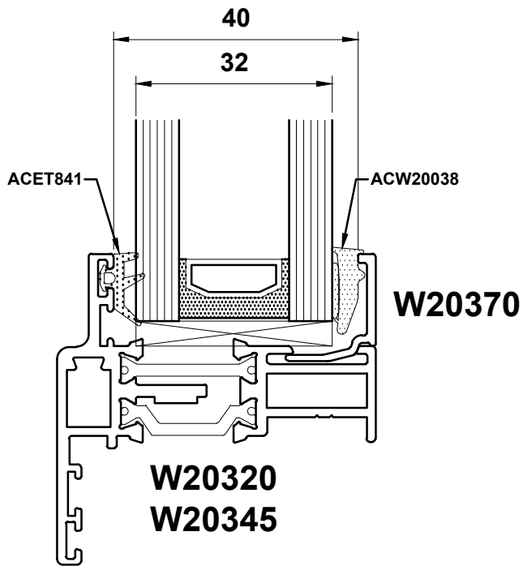

Note: We advise to silicon seal bead in high exposed areas.

42mm Glazing

Gasket Glazed

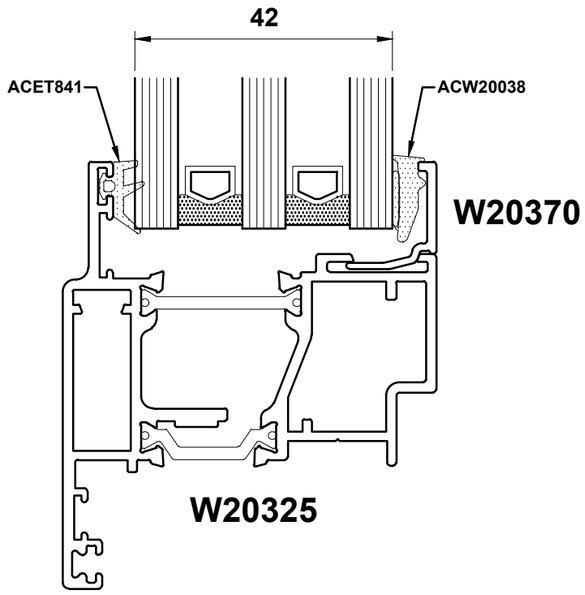

Note: We advise to silicon seal bead in high exposed areas.

Do Not Scale From This Drawing

W20015 Bay Pole Selection

When using W20069 on a cill, we recommend using SPD750 infill to position the assembly forward over the drainage channel.

W202371

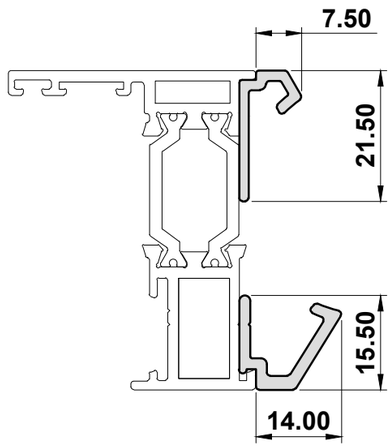

W20069

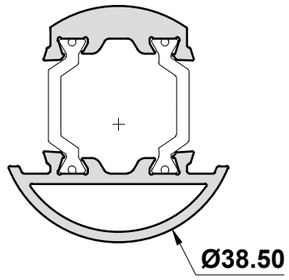

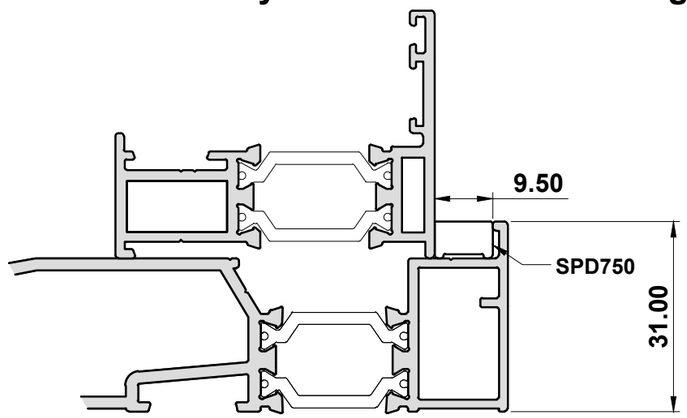

W20372

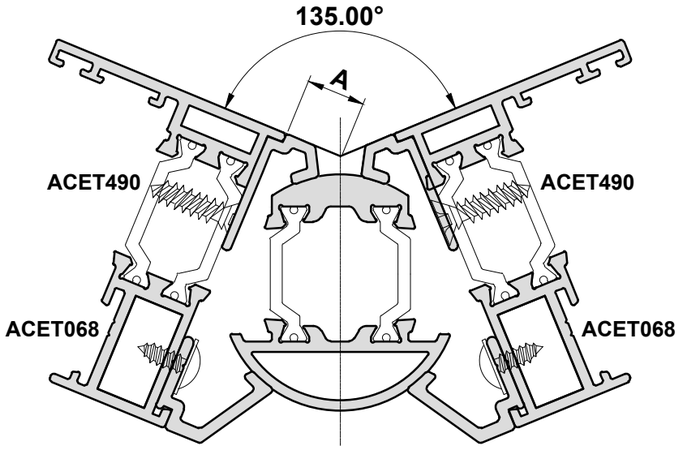

ANGLE	DEDUCTION 'A'
180°	18
175°	17
170°	16
165°	15.5
160°	14.5
155°	13.5
150°	12.5
145°	11.5
140°	10.5
135°	9.5
130°	8.5
125°	7.5
120°	6.5
115°	5

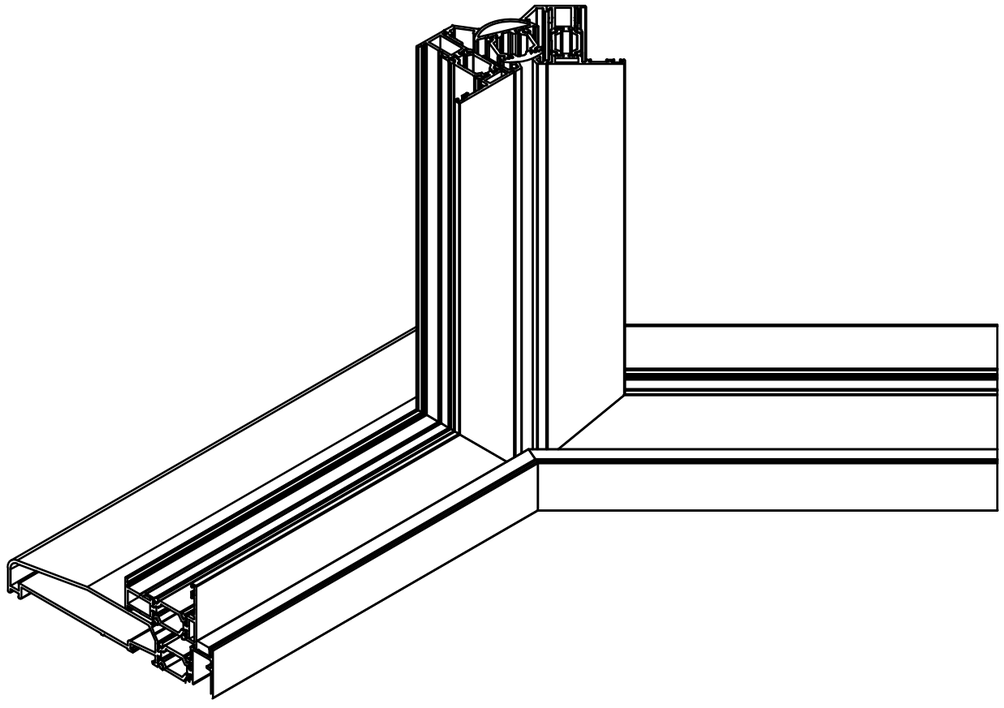

W20017 Bay Pole Selection

169°

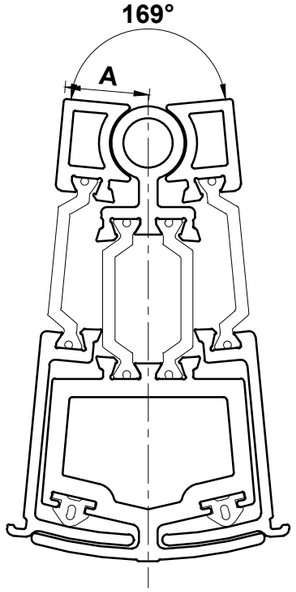

Important Note:
All joints must be adequately sealed using ACSIL04

149°

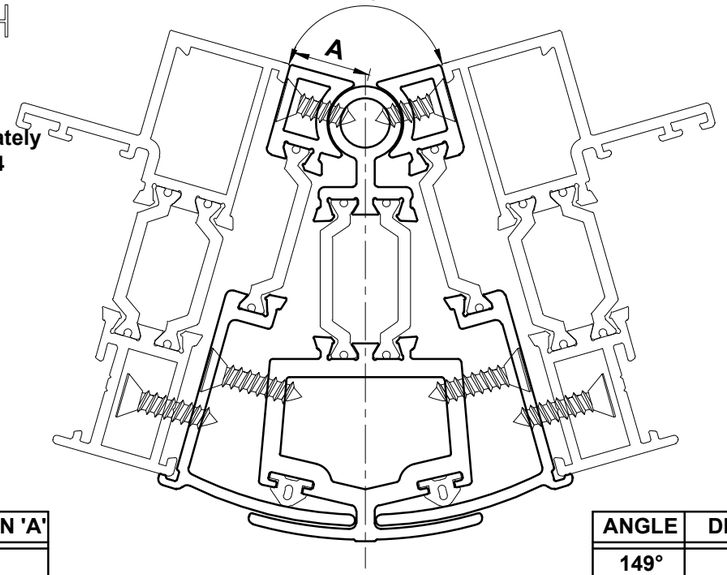

129°

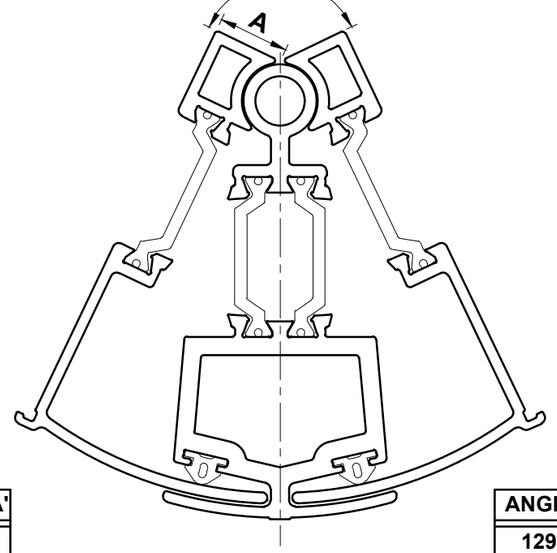

ANGLE	DEDUCTION 'A'
169°	14
165°	13.5
160°	13.6
155°	13
150°	13

ANGLE	DEDUCTION 'A'
149°	12.5
145°	12.5
140°	12
135°	12
130°	11.5

ANGLE	DEDUCTION 'A'
129°	11.5
125°	11.5
120°	11
115°	10.5

150°

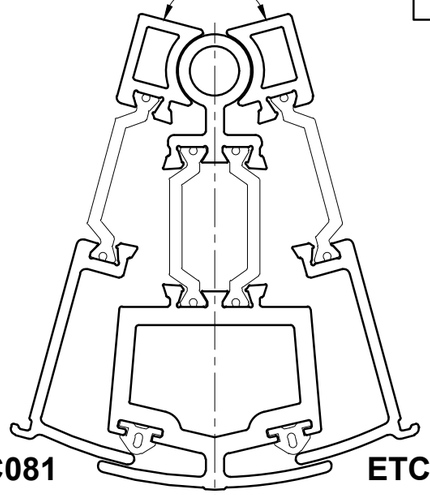

ETC081 ETC081

ETC080

130°

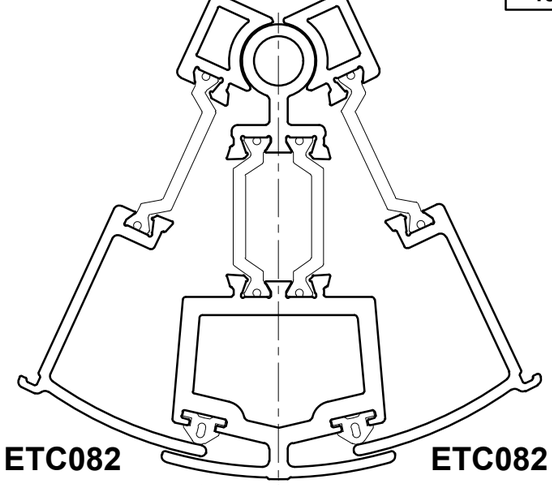

ETC082 ETC082

ETC080

115°

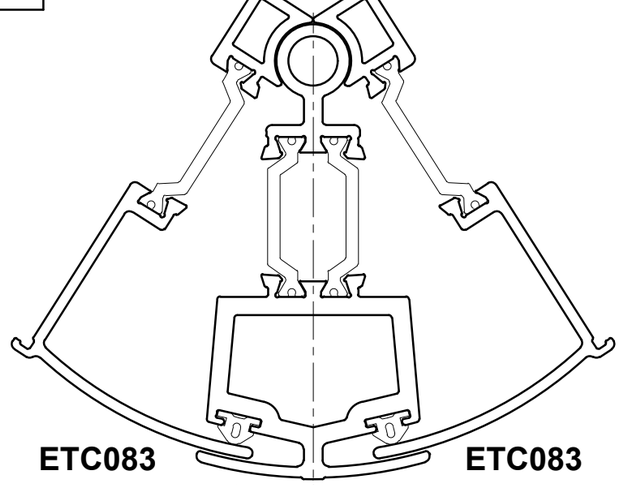

ETC083 ETC083

ETC080

Do Not Scale From This Drawing

Fixing Strap Guide

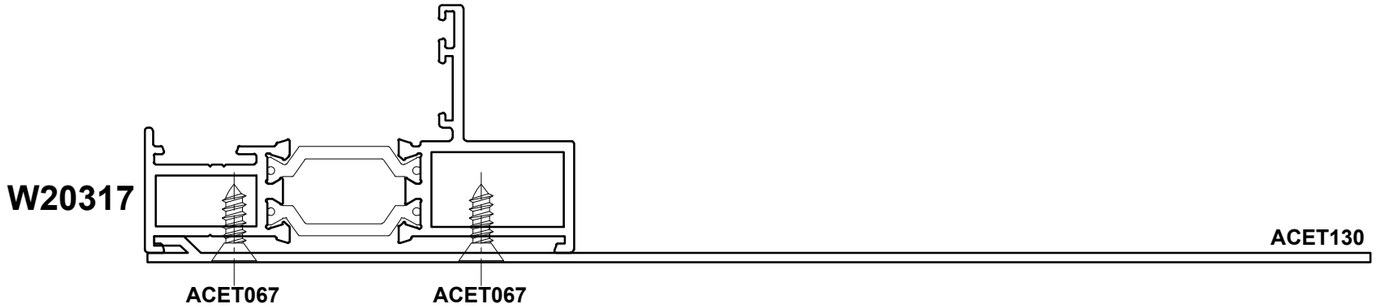

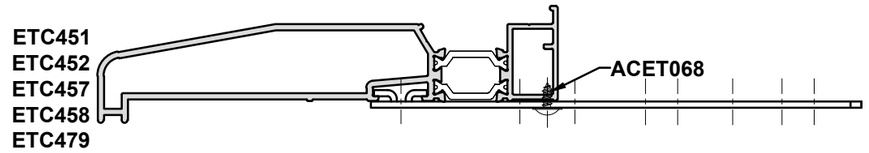

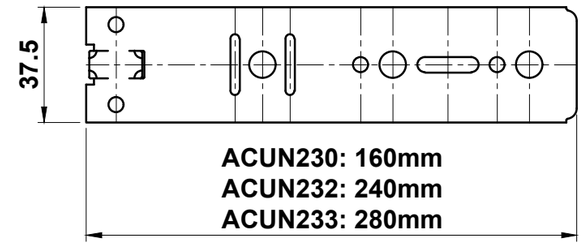

NOTE:
Fixing straps should be spaced a minimum of 150mm in from each end & at a maximum of 300mm apart.

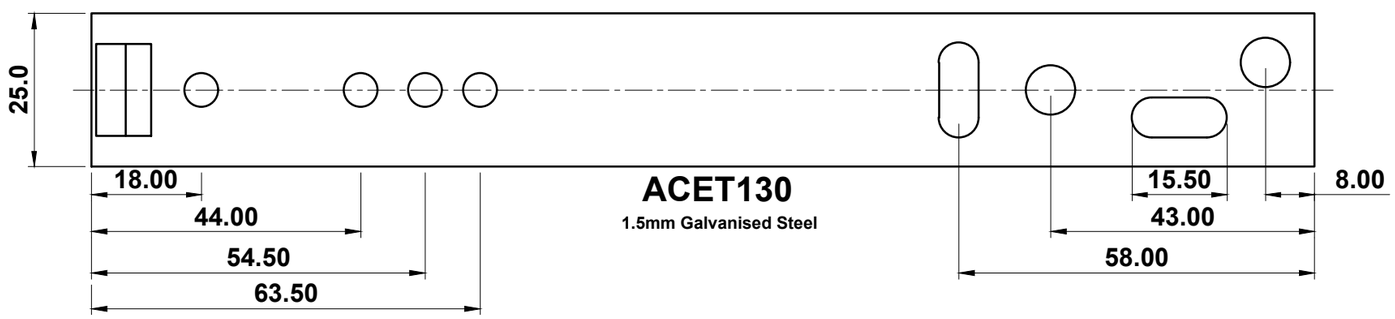

Example Layout

AA

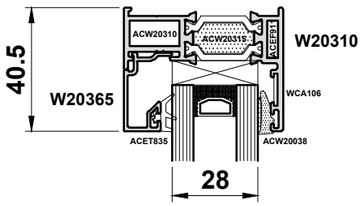

BB

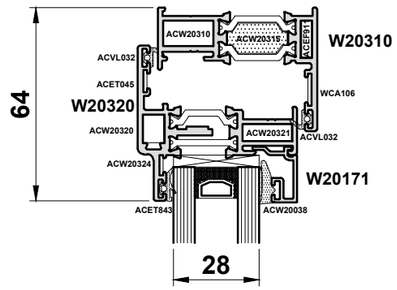

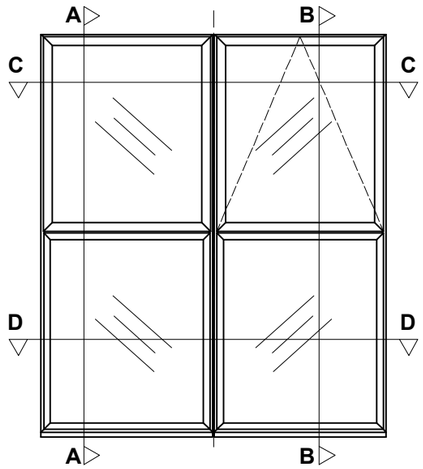

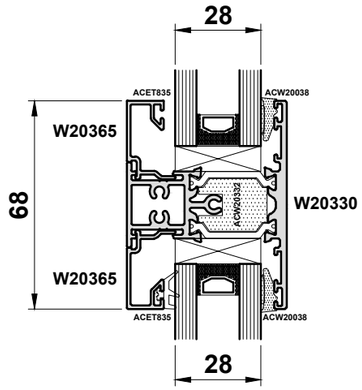

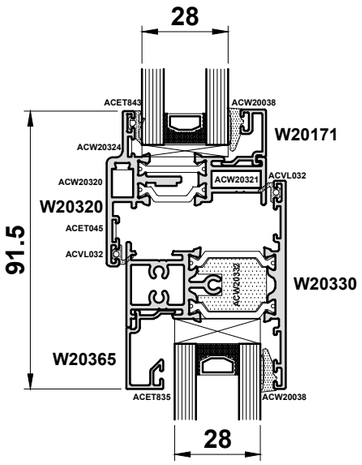

CC

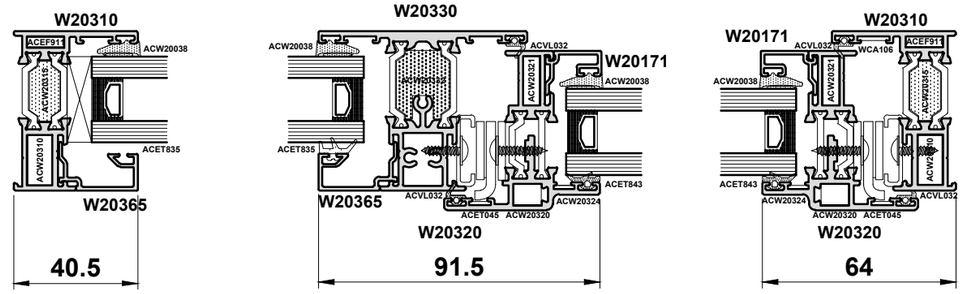

DD

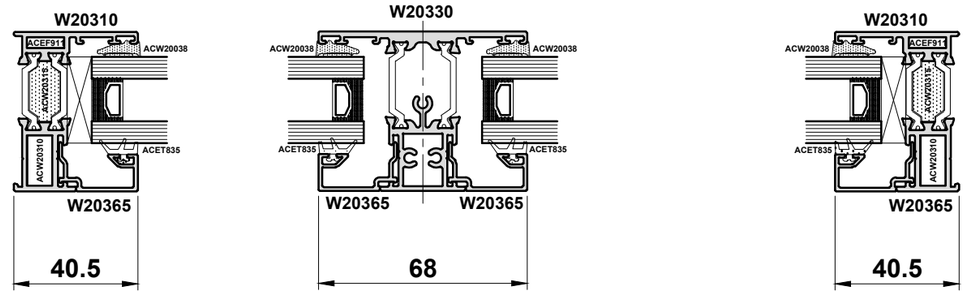

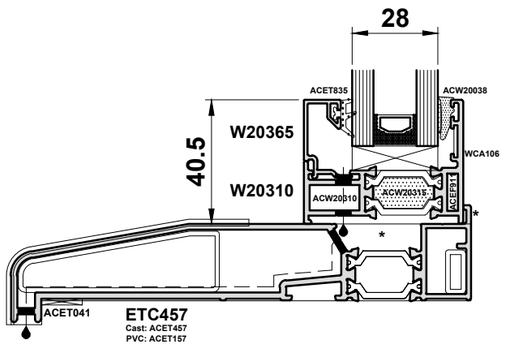

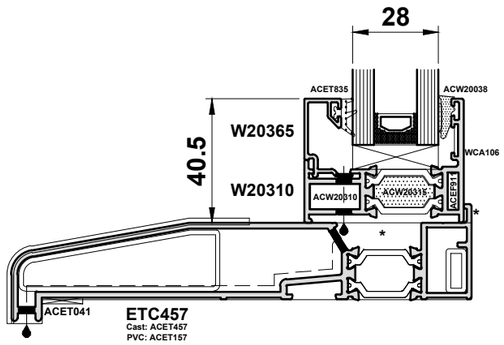

Do Not Scale From This Drawing

Section F

F W Sawing Tables

Cutting Information..... F03
Cutting Information..... F04
Cutting Information..... F05
Cutting Information..... F06

Section F

Cutting Information

PART DESCRIPTIONS	TYPICAL STYLES	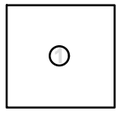	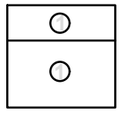		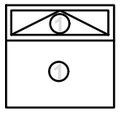	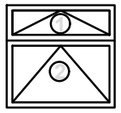	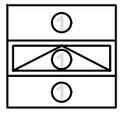	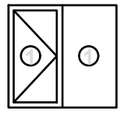	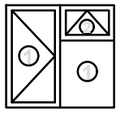	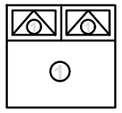	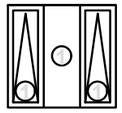	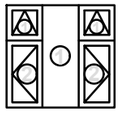		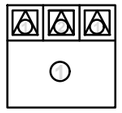	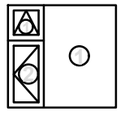	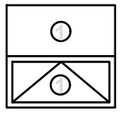
Outer Frame	Head & Cill	W	W	W	W	W	W	W	W	W	W	W	W	W	W	W
	Jambs	H	H	H	H	H	H	H	H	H	H	H	H	H	H	H
	Transoms		W - 41		W - 41	W - 41	W - 41		OF to ℄M - 34.5	W - 50		OF to ℄M - 34.5	℄M to ℄M - 34.5	W - 50	OF to ℄M - 34.5	W - 50
	Mullions							H - 41	H - 41	OF to ℄T - 28	H - 41	H - 41	H - 41	OF to ℄T - 28	H - 41	
Vent (1)	Horizontal Members			W - 27	W - 27	W - 27	W - 27	OF to ℄M - 20.5	OF to ℄M - 20.5	OF to ℄M - 20.5	OF to ℄M - 20.5	OF to ℄M - 20.5	OF to ℄M - 20.5	OF to ℄M - 20.5	OF to ℄M - 20.5	W - 27
	Vertical Members			H - 27	OF to ℄T - 20.5	OF to ℄T - 20.5	℄T to ℄T - 14	H - 27	H - 27	OF to ℄T - 20.5	H - 27	OF to ℄T - 20.5	H - 27	OF to ℄T - 20.5	OF to ℄T - 20.5	OF to ℄T - 20.5
	Glass Width			W - 106	W - 106	W - 106	W - 106	OF to ℄M - 99.5	OF to ℄M - 99.5	OF to ℄M - 99.5	OF to ℄M - 99.5	OF to ℄M - 99.5	OF to ℄M - 99.5	OF to ℄M - 99.5	OF to ℄M - 99.5	W - 106
	Glass Height			H - 106	OF to ℄T - 99.5	OF to ℄T - 99.5	℄T to ℄T - 99.5	H - 106	H - 106	OF to ℄T - 99.5	H - 106	OF to ℄T - 99.5	H - 106	OF to ℄T - 99.5	OF to ℄T - 99.5	OF to ℄T - 99.5
Vent (2)	Horizontal Members					W - 27			OF to ℄M - 20.5			OF to ℄M - 20.5	℄M to ℄M - 14	℄M to ℄M - 14	OF to ℄M - 14	
	Vertical Members					OF to ℄T - 20.5			OF to ℄T - 20.5			OF to ℄T - 20.5	OF to ℄T - 20.5	OF to ℄T - 20.5	OF to ℄T - 20.5	
	Glass Width					W - 99.5			OF to ℄M - 99.5			OF to ℄M - 99.5	℄M to ℄M - 93	℄M to ℄M - 93	OF to ℄M - 93	
	Glass Height					OF to ℄T - 99.5			OF to ℄T - 99.5			OF to ℄T - 99.5	OF to ℄T - 99.5	OF to ℄T - 99.5	OF to ℄T - 99.5	
Fixed Pane (1)	Horizontal Members	W - 41	W - 41		W - 41		W - 41	OF to ℄M - 34.5	OF to ℄M - 34.5	W - 41	℄M to ℄M - 34.5	℄M to ℄M - 28	℄M to ℄M - 28	W - 41	OF to ℄M - 34.5	W - 41
	Vertical Members	H - 41	OF to ℄T - 34.5		OF to ℄T - 34.5		OF to ℄T - 34.5	H - 41	OF to ℄T - 34.5	OF to ℄T - 34.5	H - 41	H - 41	OF to ℄T - 34.5	OF to ℄T - 34.5	H - 41	OF to ℄T - 34.5
	Glass Width	W - 51	W - 51		W - 51		W - 51	OF to ℄M - 44.5	OF to ℄M - 44.5	W - 51	℄M to ℄M - 38	℄M to ℄M - 38	℄M to ℄M - 38	W - 51	OF to ℄M - 44.5	W - 51
	Glass Height	H - 51	OF to ℄T - 44.5		OF to ℄T - 44.5		OF to ℄T - 44.5	H - 51	OF to ℄T - 44.5	OF to ℄T - 44.5	H - 51	H - 51	OF to ℄T - 44.5	OF to ℄T - 44.5	H - 51	OF to ℄T - 44.5

Legend

W	=	Outer Frame Width (Longest Leg)
H	=	Outer Frame Height (Longest Leg)
℄T	=	Centre Line of Transom
℄M	=	Centre Line of Mullion
OF	=	Edge of Outer Frame (Longest Leg)

Sections

Outer Frame:	W20310, W20317
Sash:	W20320
Fixed Light:	Beaded
Transom/Mullion:	W20330, W20331, W20332, W20333

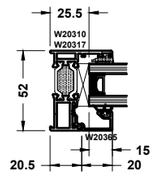

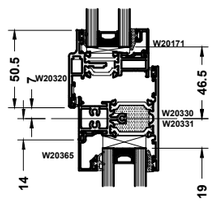

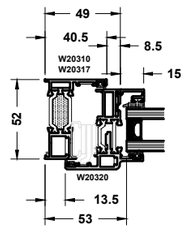

Do Not Scale From This Drawing

Cutting Information

PART DESCRIPTIONS	TYPICAL STYLES	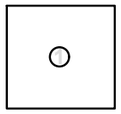	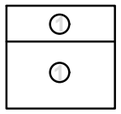		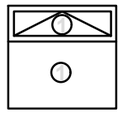	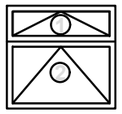	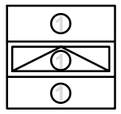	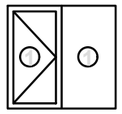	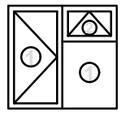	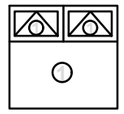	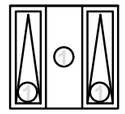	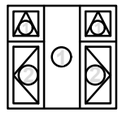		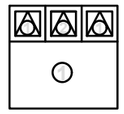	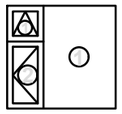	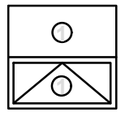
Outer Frame	Head & Cill	W	W	W	W	W	W	W	W	W	W	W	W	W	W	W
	Jambs	H	H	H	H	H	H	H	H	H	H	H	H	H	H	H
	Transoms		W - 41		W - 41	W - 41	W - 41		OF to ℄M - 34.5	W - 50		OF to ℄M - 34.5	℄M to ℄M - 34.5	W - 50	OF to ℄M - 34.5	W - 50
	Mullions							H - 41	H - 41	OF to ℄T - 28	H - 41	H - 41	H - 41	OF to ℄T - 28	H - 41	
Vent (1)	Horizontal Members			W - 27	W - 27	W - 27	W - 27	OF to ℄M - 20.5	OF to ℄M - 20.5	OF to ℄M - 20.5	OF to ℄M - 20.5	OF to ℄M - 20.5	OF to ℄M - 20.5	OF to ℄M - 20.5	OF to ℄M - 20.5	W - 27
	Vertical Members			H - 27	OF to ℄T - 20.5	OF to ℄T - 20.5	℄T to ℄T - 14	H - 27	H - 27	OF to ℄T - 20.5	H - 27	OF to ℄T - 20.5	H - 27	OF to ℄T - 20.5	OF to ℄T - 20.5	OF to ℄T - 20.5
	Glass Width			W - 106	W - 106	W - 106	W - 106	OF to ℄M - 99.5	OF to ℄M - 99.5	OF to ℄M - 99.5	OF to ℄M - 99.5	OF to ℄M - 99.5	OF to ℄M - 99.5	OF to ℄M - 99.5	OF to ℄M - 99.5	W - 106
	Glass Height			H - 106	OF to ℄T - 99.5	OF to ℄T - 99.5	℄T to ℄T - 99.5	H - 106	H - 106	OF to ℄T - 99.5	H - 106	OF to ℄T - 99.5	H - 106	OF to ℄T - 99.5	OF to ℄T - 99.5	OF to ℄T - 99.5
Vent (2)	Horizontal Members					W - 27			OF to ℄M - 20.5			OF to ℄M - 20.5	℄M to ℄M - 14	℄M to ℄M - 14	OF to ℄M - 14	
	Vertical Members					OF to ℄T - 20.5			OF to ℄T - 20.5			OF to ℄T - 20.5	OF to ℄T - 20.5	OF to ℄T - 20.5	OF to ℄T - 20.5	
	Glass Width					W - 99.5			OF to ℄M - 99.5			OF to ℄M - 99.5	℄M to ℄M - 93	℄M to ℄M - 93	OF to ℄M - 93	
	Glass Height					OF to ℄T - 99.5			OF to ℄T - 99.5			OF to ℄T - 99.5	OF to ℄T - 99.5	OF to ℄T - 99.5	OF to ℄T - 99.5	
Fixed Pane (1)	Horizontal Members	W - 29	W - 29		W - 29		W - 29	OF to ℄M - 22.5	OF to ℄M - 22.5	W - 38	℄M to ℄M - 25	℄M to ℄M - 16	℄M to ℄M - 16	W - 38	OF to ℄M - 25	W - 38
	Vertical Members	H - 29	OF to ℄T - 22.5		OF to ℄T - 22.5		OF to ℄T - 22.5	H - 38	OF to ℄T - 25	OF to ℄T - 25	H - 38	H - 38	OF to ℄T - 25	OF to ℄T - 25	H -38	OF to ℄T - 25
	Glass Width	W - 98	W - 98		W - 98		W - 98	OF to ℄M - 91.5	OF to ℄M - 91.5	W - 98	℄M to ℄M - 85	℄M to ℄M - 85	℄M to ℄M - 85	W - 98	OF to ℄M - 91.5	W - 98
	Glass Height	H - 98	OF to ℄T - 91.5		OF to ℄T - 91.5		OF to ℄T - 91.5	H - 98	OF to ℄T - 91.5	OF to ℄T - 91.5	H - 98	H - 98	OF to ℄T - 91.5	OF to ℄T - 91.5	H - 98	OF to ℄T - 91.5

Legend

W	=	Outer Frame Width (Longest Leg)
H	=	Outer Frame Height (Longest Leg)
℄T	=	Centre Line of Transom
℄M	=	Centre Line of Mullion
OF	=	Edge of Outer Frame (Longest Leg)

Sections

Outer Frame:	W20310, W20317
Sash:	W20320
Fixed Light:	W20345
Transom/Mullion:	W20330, W20331, W20332, W20333

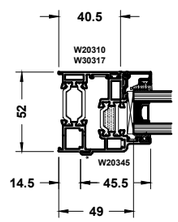

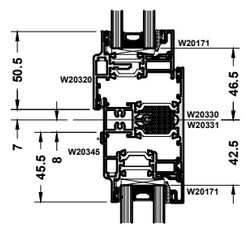

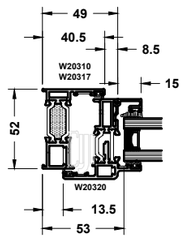

Do Not Scale From This Drawing

Cutting Information

PART DESCRIPTIONS	TYPICAL STYLES	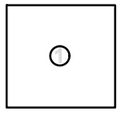	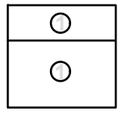		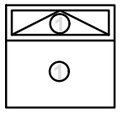	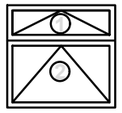	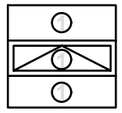	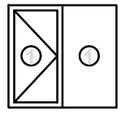	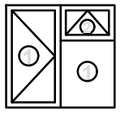	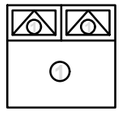	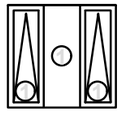	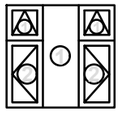		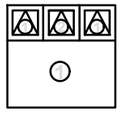	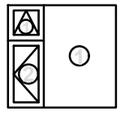	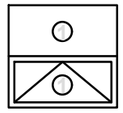
Outer Frame	Head & Cill	W	W	W	W	W	W	W	W	W	W	W	W	W	W	W
	Jambs	H	H	H	H	H	H	H	H	H	H	H	H	H	H	H
	Transoms		W - 41		W - 41	W - 41	W - 41		OF to ℄M - 34.5	W - 50		OF to ℄M - 34.5	℄M to ℄M - 34.5	W - 50	OF to ℄M - 34.5	W - 50
	Mullions							H - 41	H - 41	OF to ℄T - 28	H - 41	H - 41	H - 41	OF to ℄T - 28	H - 41	
Vent (1)	Horizontal Members			W - 27	W - 27	W - 27	W - 27	OF to ℄M - 20.5	OF to ℄M - 20.5	OF to ℄M - 20.5	OF to ℄M - 20.5	OF to ℄M - 20.5	OF to ℄M - 20.5	OF to ℄M - 20.5	OF to ℄M - 20.5	W - 27
	Vertical Members			H - 27	OF to ℄T - 20.5	OF to ℄T - 20.5	℄T to ℄T - 14	H - 27	H - 27	OF to ℄T - 20.5	H - 27	OF to ℄T - 20.5	H - 27	OF to ℄T - 20.5	OF to ℄T - 20.5	OF to ℄T - 20.5
	Glass Width			W - 144	W - 144	W - 144	W - 144	OF to ℄M - 137.5	OF to ℄M - 137.5	OF to ℄M - 137.5	OF to ℄M - 137.5	OF to ℄M - 137.5	OF to ℄M - 137.5	OF to ℄M - 137.5	OF to ℄M - 137.5	W - 144
	Glass Height			H - 144	OF to ℄T - 137.5	OF to ℄T - 137.5	℄T to ℄T - 137.5	H - 144	H - 144	OF to ℄T - 137.5	H - 144	OF to ℄T - 137.5	H - 144	OF to ℄T - 137.5	OF to ℄T - 137.5	OF to ℄T - 137.5
Vent (2)	Horizontal Members					W - 27			OF to ℄M - 20.5			OF to ℄M - 20.5	℄M to ℄M - 14	℄M to ℄M - 14	OF to ℄M - 14	
	Vertical Members					OF to ℄T - 20.5			OF to ℄T - 20.5			OF to ℄T - 20.5	OF to ℄T - 20.5	OF to ℄T - 20.5	OF to ℄T - 20.5	
	Glass Width					W - 137.5			OF to ℄M - 137.5			OF to ℄M - 137.5	℄M to ℄M - 131	℄M to ℄M - 131	OF to ℄M - 131	
	Glass Height					OF to ℄T - 137.5			OF to ℄T - 137.5			OF to ℄T - 137.5	OF to ℄T - 137.5	OF to ℄T - 137.5	OF to ℄T - 137.5	
Fixed Pane (1)	Horizontal Members	W - 41	W - 41		W - 41		W - 41	OF to ℄M - 34.5	OF to ℄M - 34.5	W - 41	℄M to ℄M - 34.5	℄M to ℄M - 28	℄M to ℄M - 28	W - 41	OF to ℄M - 34.5	W - 41
	Vertical Members	H - 41	OF to ℄T - 34.5		OF to ℄T - 34.5		OF to ℄T - 34.5	H - 41	OF to ℄T - 34.5	OF to ℄T - 34.5	H - 41	H - 41	OF to ℄T - 34.5	OF to ℄T - 34.5	H - 41	OF to ℄T - 34.5
	Glass Width	W - 51	W - 51		W - 51		W - 51	OF to ℄M - 44.5	OF to ℄M - 44.5	W - 51	℄M to ℄M - 38	℄M to ℄M - 38	℄M to ℄M - 38	W - 51	OF to ℄M - 44.5	W - 51
	Glass Height	H - 51	OF to ℄T - 44.5		OF to ℄T - 44.5		OF to ℄T - 44.5	H - 51	OF to ℄T - 44.5	OF to ℄T - 44.5	H - 51	H - 51	OF to ℄T - 44.5	OF to ℄T - 44.5	H - 51	OF to ℄T - 44.5

Legend

W	=	Outer Frame Width (Longest Leg)
H	=	Outer Frame Height (Longest Leg)
℄T	=	Centre Line of Transom
℄M	=	Centre Line of Mullion
OF	=	Edge of Outer Frame (Longest Leg)

Sections

Outer Frame:	W20310, W20317
Sash:	W20325
Fixed Light:	Beaded
Transom/Mullion:	W20330, W20331, W20332, W20333

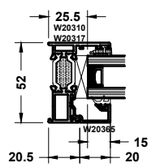

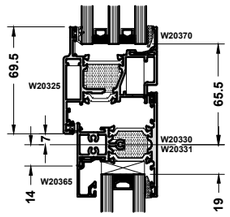

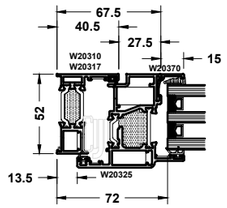

Do Not Scale From This Drawing

Cutting Information

PART DESCRIPTIONS	TYPICAL STYLES	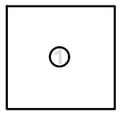	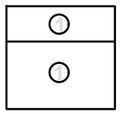		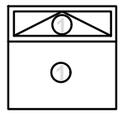	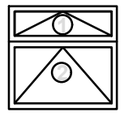	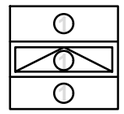	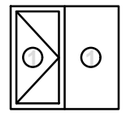	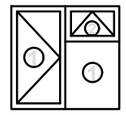	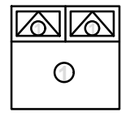	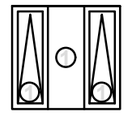	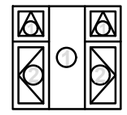	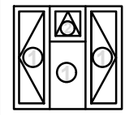	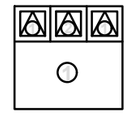	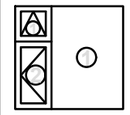	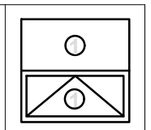
Outer Frame	Head & Cill	W	W	W	W	W	W	W	W	W	W	W	W	W	W	W
	Jambs	H	H	H	H	H	H	H	H	H	H	H	H	H	H	H
	Transoms		W - 41		W - 41	W - 41	W - 41		OF to ℄M - 34.5	W - 50		OF to ℄M - 34.5	℄M to ℄M - 34.5	W - 50	OF to ℄M - 34.5	W - 50
	Mullions							H - 41	H - 41	OF to ℄T - 28	H - 41	H - 41	H - 41	OF to ℄T - 28	H - 41	
Vent (1)	Horizontal Members			W - 27	W - 27	W - 27	W - 27	OF to ℄M - 20.5	OF to ℄M - 20.5	OF to ℄M - 20.5	OF to ℄M - 20.5	OF to ℄M - 20.5	OF to ℄M - 20.5	OF to ℄M - 20.5	OF to ℄M - 20.5	W - 27
	Vertical Members			H - 27	OF to ℄T - 20.5	OF to ℄T - 20.5	℄T to ℄T - 14	H - 27	H - 27	OF to ℄T - 20.5	H - 27	OF to ℄T - 20.5	H - 27	OF to ℄T - 20.5	OF to ℄T - 20.5	OF to ℄T - 20.5
	Glass Width			W - 144	W - 144	W - 144	W - 144	OF to ℄M - 137.5	OF to ℄M - 137.5	OF to ℄M - 137.5	OF to ℄M - 137.5	OF to ℄M - 137.5	OF to ℄M - 137.5	OF to ℄M - 137.5	OF to ℄M - 137.5	W -144
	Glass Height			H - 144	OF to ℄T - 137.5	OF to ℄T - 137.5	℄T to ℄T - 137.5	H - 144	H - 144	OF to ℄T - 137.5	H - 144	OF to ℄T - 137.5	H - 144	OF to ℄T - 137.5	OF to ℄T - 137.5	OF to ℄T - 137.5
Vent (2)	Horizontal Members					W - 27			OF to ℄M - 20.5			OF to ℄M - 20.5	℄M to ℄M - 14	℄M to ℄M - 14	OF to ℄M - 14	
	Vertical Members					OF to ℄T - 20.5			OF to ℄T - 20.5			OF to ℄T - 20.5	OF to ℄T - 20.5	OF to ℄T - 20.5	OF to ℄T - 20.5	
	Glass Width					W - 137.5			OF to ℄M - 137.5			OF to ℄M - 137.5	℄M to ℄M - 131	℄M to ℄M - 131	OF to ℄M - 131	
	Glass Height					OF to ℄T - 137.5			OF to ℄T - 137.5			OF to ℄T - 137.5	OF to ℄T - 137.5	OF to ℄T - 137.5	OF to ℄T - 137.5	
Fixed Pane (1)	Horizontal Members	W - 29	W - 29		W - 29		W - 29	OF to ℄M - 22.5	OF to ℄M - 22.5	W - 38	℄M to ℄M - 25	℄M to ℄M - 16	℄M to ℄M - 16	W - 38	OF to ℄M - 25	W - 38
	Vertical Members	H - 29	OF to ℄T - 22.5		OF to ℄T - 22.5		OF to ℄T - 22.5	H - 38	OF to ℄T - 25	OF to ℄T - 25	H - 38	H - 38	OF to ℄T - 25	OF to ℄T - 25	H - 38	OF to ℄T - 25
	Glass Width	W - 98	W - 98		W - 98		W - 98	OF to ℄M - 91.5	OF to ℄M - 91.5	W - 98	℄M to ℄M - 85	℄M to ℄M - 85	℄M to ℄M - 85	W - 98	OF to ℄M - 91.5	W - 98
	Glass Height	H - 98	OF to ℄T - 91.5		OF to ℄T - 91.5		OF to ℄T - 91.5	H - 98	OF to ℄T - 91.5	OF to ℄T - 91.5	H - 98	H - 98	OF to ℄T - 91.5	OF to ℄T - 91.5	H - 98	OF to ℄T - 91.5

Legend

W	=	Outer Frame Width (Longest Leg)
H	=	Outer Frame Height (Longest Leg)
℄T	=	Centre Line of Transom
℄M	=	Centre Line of Mullion
OF	=	Edge of Outer Frame (Longest Leg)

Sections

Outer Frame:	W20310, W20317
Sash:	W20325
Fixed Light:	W20345
Transom/Mullion:	W20330, W20331, W20332, W20333

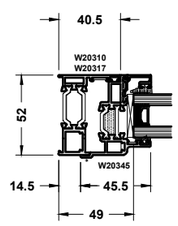

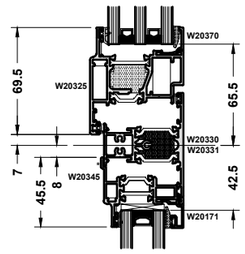

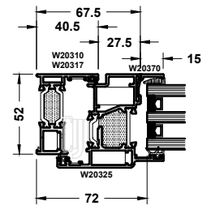

Do Not Scale From This Drawing