Main Index

INT Index

Index A01

A INT

Profiles

Specification Pages ..... A03 - A05
Technical Information ..... A06 - A10
Scale Profile Drawings ..... A11 - A26

B INT

Accessories

Photos & Drawings ..... B03 - B24

C INT

Sections

Scale Elevations ..... C03 - C42

D INT

Statics ..... D03 - D10

E INT

Construction Drawings

Corner Joint Details E03
Crimping Details ..... E04 - E05
Transom Details ..... E06 - E07
Deep Bottom Rail Detail E08
Hinged Door Lock Preparation E09
Pivot Door Lock Preparation E10
Open In Door Hinge Details E11
Open In Double Door Details ..... E12 - E13
Sliding Door - Roller Fixing E14
Pivot Door - ACSIN201 Preparation & Fixing ..... E15 - E16
Glazing Details ..... E17 - E18

F INT

Sawing Tables

Fixed Screen F03
Hinged Door ..... F04 - F08
Sliding Door ..... F09 - F12
Pivot Door F13

Specification

GENERAL DESCRIPTION

Our "AluSpace Interior Screen" system is the perfect solution for dividing living spaces with a run through floor finish, allowing high levels of natural light to flood between rooms and maximising the aesthetics.

The aluminium steel-look interior screens and doors provide an elegant, versatile and slim sightline design suitable for both traditional and modern homes. Ideal for renovation works, but exceptional also for contemporary residential new builds and commercial projects.

Manufactured to bespoke requirements and offered as a sliding, pivoting or hinged door as well as a fixed interior screen available in a huge range of colours.

PROFILE SPECIFICATION

The door frames are constructed of aluminium alloy extrusion to BS EN 755-9 and BS EN 12020, extruded to 6063 T6 alloy.

RECOMMENDED DESIGN DOOR LIMITATIONS

Hinged Doors

Door Sashes:

Maximum Width: 900mm
Minimum Width: 400mm
Maximum Height: 2200mm
Maximum Weight: 60kg

Sliding Doors

Door Sashes:

Maximum Width: 1200mm
Minimum Width: 400mm
Maximum Height: 2500mm
Maximum Weight: 100kg (with 2 x ACINT313 rollers)

Pivot Doors

Door Sashes:

Maximum Width: 2000mm
Minimum Width: 400mm
Maximum Height: 2500mm
Maximum Weight: 100kg

Fixed Screens:

Please see table on page D07.

Fixed screen sizes are based on a coupler limit at 0.8kN/m.
Size limits can vary depending on application and the category of building.
Please refer to Approved Document K and CWCT for further information on the required loading for your project.

For advise on screen and door sizes outside of the recommended design limitations, please contact the Technical Department at Smart Systems Ltd Tel: 01934 876100

Specification

GENERAL MANUFACTURING

Outerframes and sashes are made by cutting the frame profiles with accurate 45° mitred ends using Tungsten Carbide Tipped Saw Blades, operating at approximately 3000 rpm.

The corners are joined using crimping cleats to form a cold forged corner joint (made by deforming small slugs of metal into the groove of the corner cleat).

The ends of transoms are profiled to fit the frame and fixed using self-tapping screws with a small joint sealant.

On polyester powder coated finishes, great care should be taken to avoid getting gap sealer on visible surfaces and should be removed as soon as possible with a clean cloth.

Care should be exercised when using products not supplied by Smart Systems Ltd as no responsibility can be accepted.

OUTER FRAME MANUFACTURING INFORMATION

The outer frame members are cut with 45° mitred ends to the overall size required, measured to the longest point of the metal.

Prior to corner crimping the centre line position of any transoms should be marked on the outer frame members. Where the transom runs right through, it should be marked out on both jambs in pairs to ensure accurate alignment of the sections.

Using the marked centre line, drill the transom fixing holes using a 4.5mm or 5mm dia. drill bit.

Corners are formed by coating the cut faces to be joined with a suitable small gap sealer. Into the mitred corner insert the cleat glue and the required corner cleats and, where required, the aluminium corner chevrons. The two mitred ends are then brought together and crimped. The small gap sealer ensures a permanent joint, keeps the joint tidy and allows joint movement. After crimping the corner joint, special care should be taken to ensure any excess sealer is removed from painted surfaces.

Transoms are cut with square ends to the sizes calculated on the cutting formula sheets. The ends are then profiled to allow them to fit into the outer frame. Special tooling is available on request to profile the end of transom.

Prior to fixing of transoms, smear the cut ends with a suitable small gap sealer. After fixing, special care should be taken to ensure any excess is cleared from painted surfaces.

Specification

SASH

Corners are formed by coating the cut faces to be joined with a suitable gap sealer. In the mitred corner insert the cleat glue and the required corner cleats and chevrons. The mitred ends are then brought together and crimped. The small gap sealer ensures a permanent joint, keeps the joint tidy and allows joint movement. Care should be taken to ensure any excess sealer is removed from the surfaces.

GLAZING

All beads are cut to suit the glazing aperture on the fully assembled door for glazing either at factory or on site as required.

Where ACINT230, ACINT232 & ACINT430 transom brackets are used, the horizontal beads must be machined over the brackets. Please see pages E06 & E07 for further details.

Glazing can be 6mm, 8mm or 18mm by selecting the relevant bead & gasket.

INSTALLATION

Please refer to relevant parts of BS 8213-4 for installation guidance. All fixings shall be suitable for the structure and application. Fixings shown in this manual are for illustration only.

smart architectural aluminium

AluSpace Interior Screen

PROFILES : TECHNICAL INFORMATION

Number	Picture	Page	Perim. mm	Mec. mm	Ix(cm4) wx(cm3)	Iy(cm4) wy(cm3)	Length	Pack pr.	MF	SA	KL	HP	M
INT210	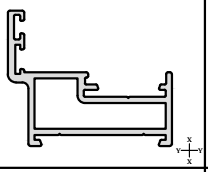	A11	196	61	4.04 / 1.83	1.42 / 1.18	6.5	1	✓		✓	✓	
INT218	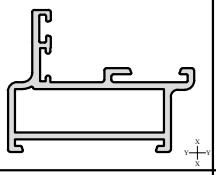	A11	189	62	3.19 / 1.41	1.16 / 0.99	6.5	1	✓		✓	✓	
INT220	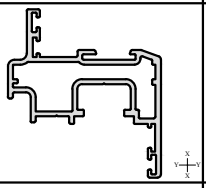	A11	286	160	8.56 / 3.27	3.89 / 1.64	6.5	1	✓		✓	✓	
INT230	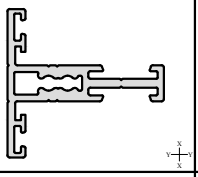	A12	199	50	2.38 / 1.04	0.82 / 0.50	6.5	1	✓		✓	✓	
INT232	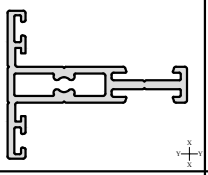	A12	209	50	3.43 / 1.33	0.83 / 0.50	6.5	1	✓		✓	✓	
INT238	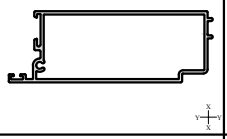	A12	304	176	8.94 / 4.91	43.12 / 8.68	6.5	1	✓		✓	✓	
INT249	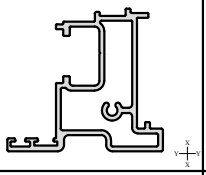	A12	255	84	6.97 / 2.64	4.46 / 2.25	6.5	1	✓		✓	✓	
INT250	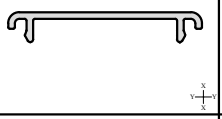	A13	90	40	- / -	- / -	6.5	1	✓		✓	✓	
INT255	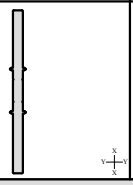	A13	224	148	50.11 / 10.02	0.19 / 0.41	6.5	1	✓		✓	✓	

A = Outside
B = Inside

MF = Mill Finish
SA = Silver Anodised
KL = Basic Colour
HP = Special Colour
M = Dual Colour

ISSUED: DECEMBER 2021

Number	Picture	Page	Perim. mm	Mec. mm	Ix(cm4) wx(cm3)	Iy(cm4) wy(cm3)	Length	Pack pr.	MF	SA	KL	HP	M
INT256	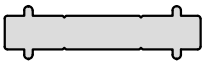	A13	94	14	2.30 / 1.31	0.08 / 0.16	6.5	1	✓		✓	✓	
INT257	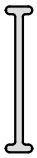	A13	71	-	0.46 / 0.33	0.00 / 0.01	6.5	1	✓				
INT270	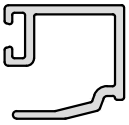	A16	108	29	- / -	- / -	6.5	1	✓		✓	✓	
INT271	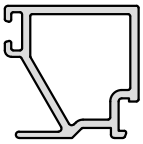	A16	107	37	- / -	- / -	6.5	1	✓		✓	✓	
INT272	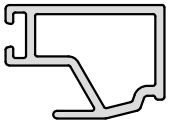	A16	89	34	- / -	- / -	6.5	1	✓		✓	✓	
INT274	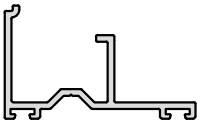	A14	199	25	2.66 / 1.01	0.65 / 0.85	6.5	1	✓		✓	✓	
INT275	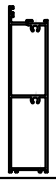	A14	426	292	15.83 / 8.95	152.95 / 20.56	6.5	1	✓		✓	✓	
INT280		A15	133	54	3.51 / 1.66	2.60 / 1.38	6.5	1	✓		✓	✓	
INT281	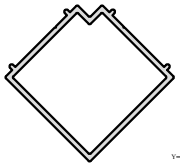	A15	175	95	7.04 / 2.45	7.59 / 2.64	6.5	1	✓		✓	✓	

A = Outside
B = Inside

MF = Mill Finish
SA = Silver Anodised
KL = Basic Colour
HP = Special Colour
M = Dual Colour

AluSpace Interior Screen

PROFILES : TECHNICAL INFORMATION

Number	Picture	Page	Perim. mm	Mec. mm	Ix(cm4) wx(cm3)	Iy(cm4) wy(cm3)	Length	Pack pr.	MF	SA	KL	HP	M
INT290	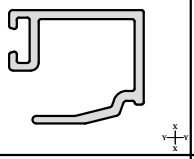	A17	112	31	- / - / -	- / - / -	6.5	1	✓		✓	✓	
INT291	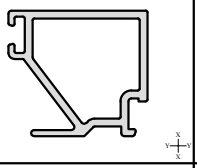	A17	110	39	- / - / -	- / - / -	6.5	1	✓		✓	✓	
INT292	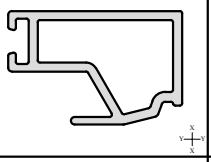	A17	93	36	- / - / -	- / - / -	6.5	1	✓		✓	✓	
INT293	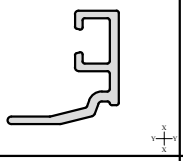	A18	79	19	- / - / -	- / - / -	6.5	1	✓		✓	✓	
INT294	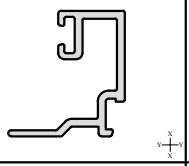	A18	124	27	- / - / -	- / - / -	6.5	1	✓		✓	✓	
INT295	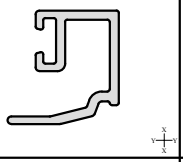	A18	98	24	- / - / -	- / - / -	6.5	1	✓		✓	✓	
INT310	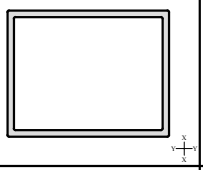	A19	177	128	12.23 / 4.89	8.28 / 4.25	6.5	1	✓		✓	✓	
INT312	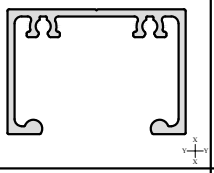	A19	317	141	12.73 / 5.09	5.40 / 4.09	6.5	1	✓		✓	✓	
INT320	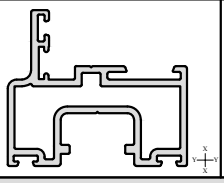	A19	233	70	4.68 / 2.21	2.10 / 1.58	6.5	1	✓		✓	✓	

A = Outside
B = Inside

MF = Mill Finish
SA = Silver Anodised
KL = Basic Colour
HP = Special Colour
M = Dual Colour

ISSUED: DECEMBER 2021

AluSpace Interior Screen

PROFILES : TECHNICAL INFORMATION

Number	Picture	Page	Perim. mm	Mec. mm	Ix(cm4) wx(cm3)	Iy(cm4) wy(cm3)	Length	Pack pr.	MF	SA	KL	HP	M
INT322	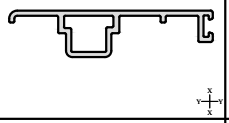	A20	149	82	2.56 — 0.98	0.17 — 0.50	6.5	1	✓		✓	✓	
INT323	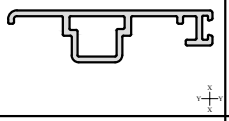	A20	143	63	1.99 — 0.81	0.17 — 0.46	6.5	1	✓		✓	✓	
INT357	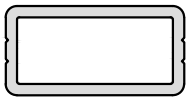	A20	70	-	0.20 — 0.34	0.62 — 0.53	6.5	1	✓				
INT410	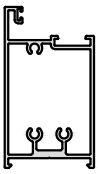	A21	329	161	17.07 — 6.85	40.67 — 11.36	6.5	1	✓		✓	✓	
INT411	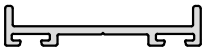	A21	124	22	1.53 — 0.79	0.02 — 0.07	6.5	1	✓		✓	✓	
INT412	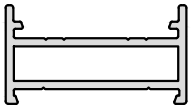	A21	127	38	2.10 — 1.27	0.31 — 0.31	6.5	1	✓		✓	✓	
INT413	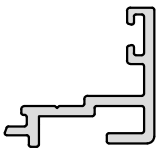	A21	120	31	0.41 — 0.27	0.27 — 0.36	6.5	1	✓		✓	✓	
INT418	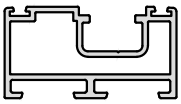	A22	234	91	7.27 — 2.99	1.84 — 1.50	6.5	1	✓		✓	✓	
INT420	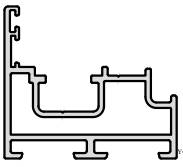	A22	274	166	8.22 — 3.00	3.27 — 2.29	6.5	1	✓		✓	✓	

A = Outside
B = Inside

MF = Mill Finish
SA = Silver Anodised
KL = Basic Colour
HP = Special Colour
M = Dual Colour

AluSpace Interior Screen

PROFILES : TECHNICAL INFORMATION

Number	Picture	Page	Perim. mm	Mec. mm	Ix(cm4) wx(cm3)	Iy(cm4) wy(cm3)	Length	Pack pr.	MF	SA	KL	HP	M
INT430	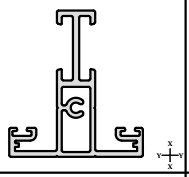	A22	295	73	6.56 / 2.16	3.18 / 1.52	6.5	1	✓		✓	✓	
INT438		A22	323	188	17.09 / 7.30	51.03 / 11.89	6.5	1	✓		✓	✓	
INT470	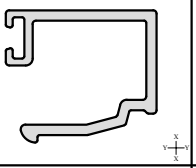	A23	136	38	- / -	- / -	6.5	1	✓		✓	✓	
INT471	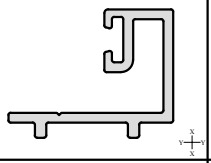	A23	119	25	- / -	- / -	6.5	1	✓		✓	✓	
INT472	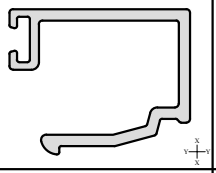	A24	140	40	- / -	- / -	6.5	1	✓		✓	✓	
INT473	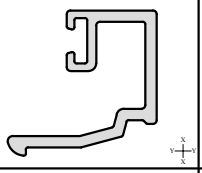	A24	116	28	- / -	- / -	6.5	1	✓		✓	✓	
PCX15	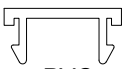 PVC	A25	63	-	- / -	- / -	6.5	1	✓				
PCX41	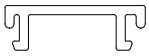 PVC	A25	65	-	- / -	- / -	6.5	1	✓				

A = Outside
B = Inside

MF = Mill Finish
SA = Silver Anodised
KL = Basic Colour
HP = Special Colour
M = Dual Colour

ISSUED: DECEMBER 2021

Primary Visible Side - - - - - - - - - - - - - - - - - - Secondary Visible Side — · — · — · — · — · — · — · —

INT210

35mm Heritage Outer Frame

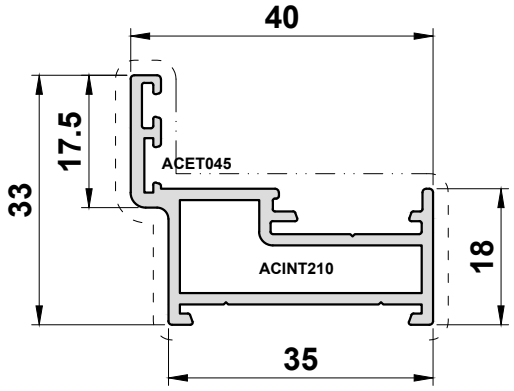

INT218

35mm Heritage Fixed Light

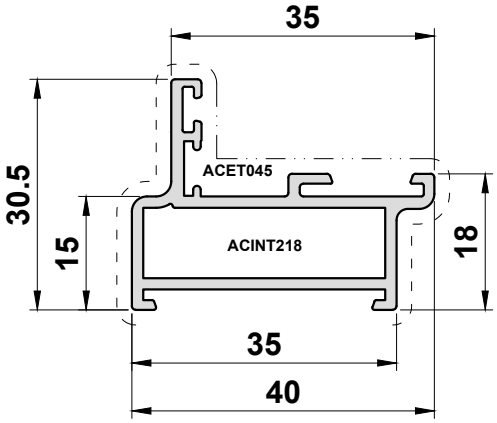

INT220

Heritage Sash

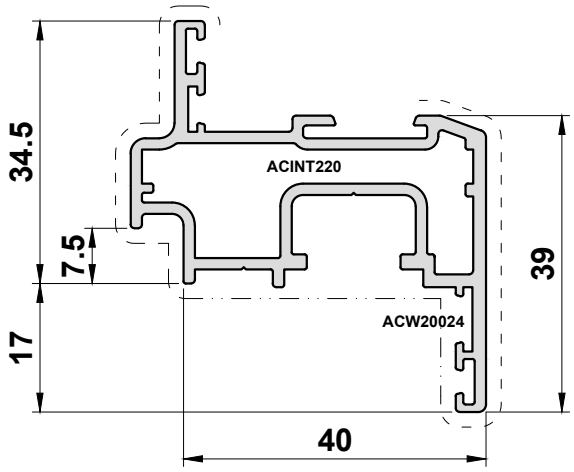

Scale 1:1

Primary Visible Side - - - - - - - - - - - - - - - - - - Secondary Visible Side — · — · — · — · — · — · —

INT230
Transom

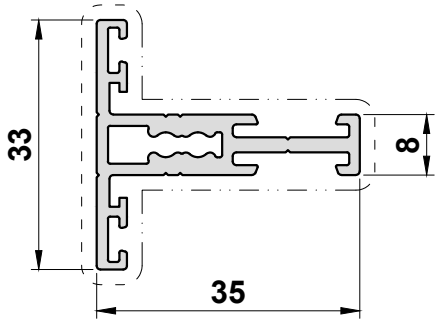

INT232
Transom

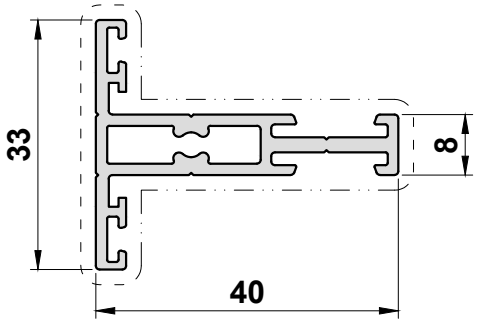

INT238
Door Lock Housing

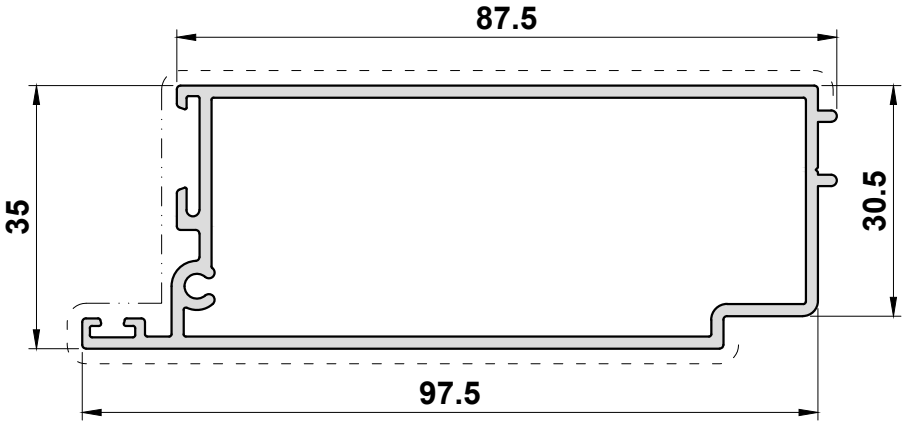

INT249
Meeting Stile

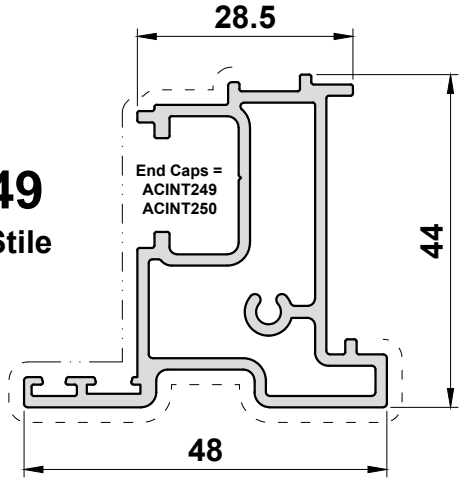

Scale 1:1

Primary Visible Side - - - - - - - - - - - - - - - - - - Secondary Visible Side — · — · — · — · — · — · — · —

INT250

Outer Frame Cap

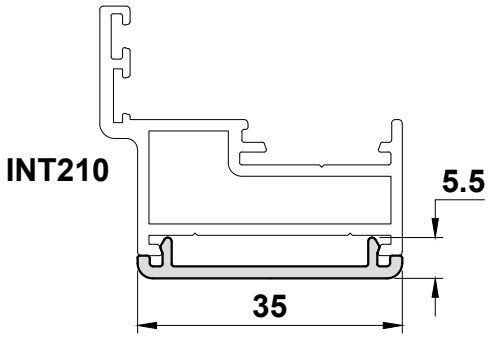

INT255

Vertical Coupler

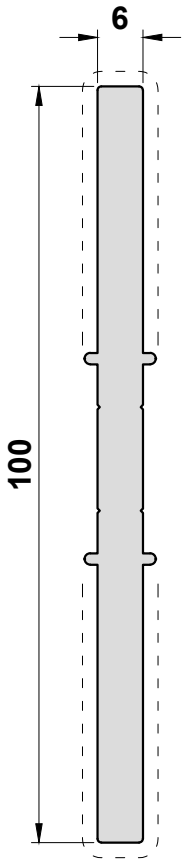

INT256

Horizontal Coupler

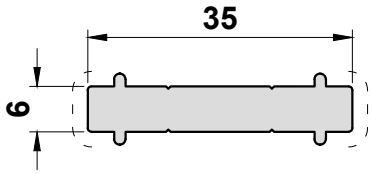

INT257

Concealed Coupler

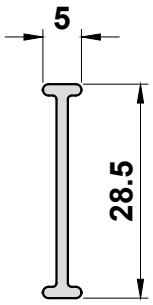

Scale 1:1

Primary Visible Side - - - - - - - - - - - - - - - - - - Secondary Visible Side — · — · — · — · — · — · — · —

INT274

Threshold Adaptor

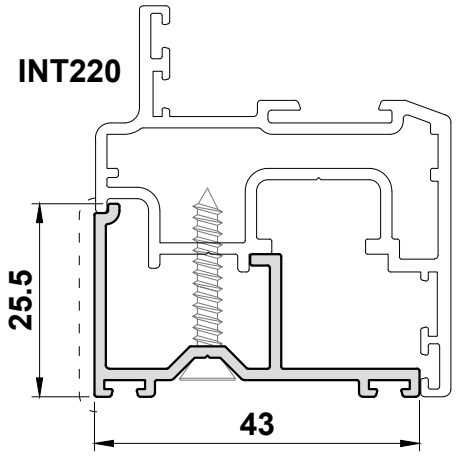

INT275

Deep Bottom Rail

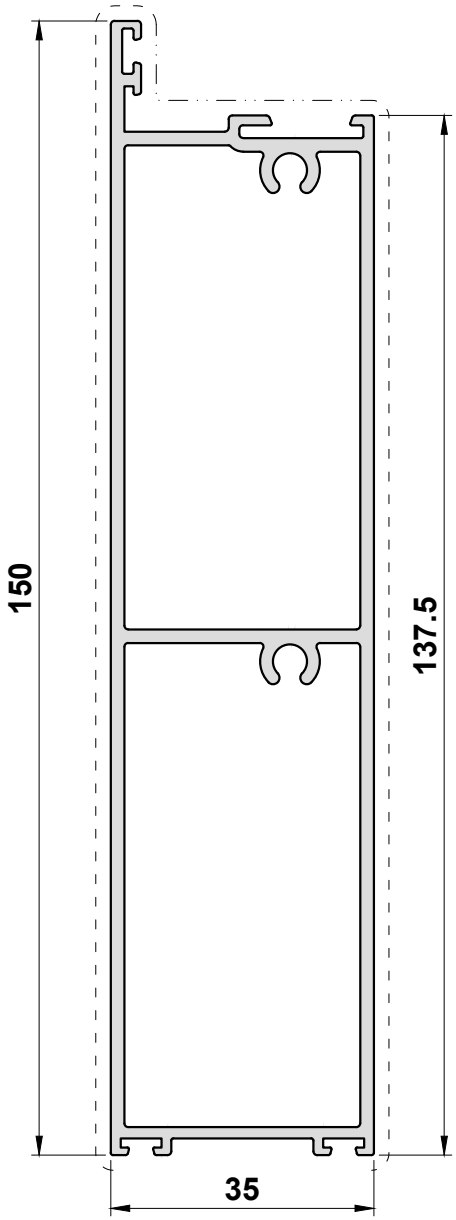

Scale 1:1

Primary Visible Side - - - - - - - - - - - - - - - - - - Secondary Visible Side — · — · — · — · — · — · — · —

INT280

135° Bay Pole

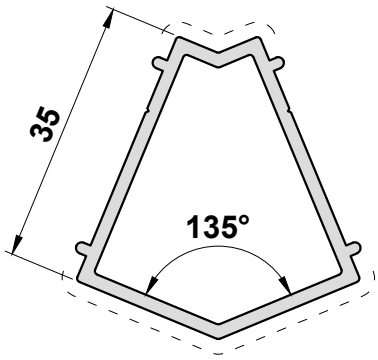

INT281

90° Bay Pole

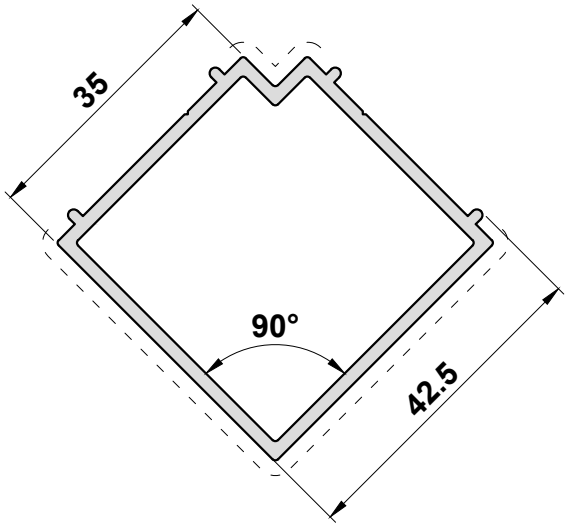

Scale 1:1

Primary Visible Side - - - - - - - - - - - - - - - - - - Secondary Visible Side — · — · — · — · — · — · — · —

INT270

Square Bead

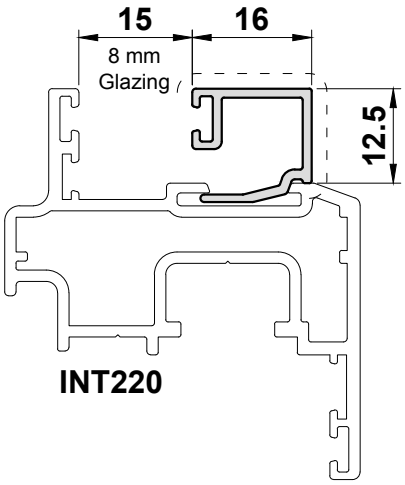

INT220

INT271

Square Bead

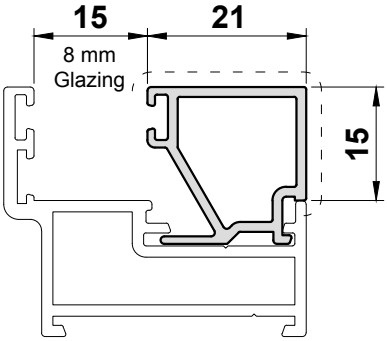

INT210

INT272

Square Bead

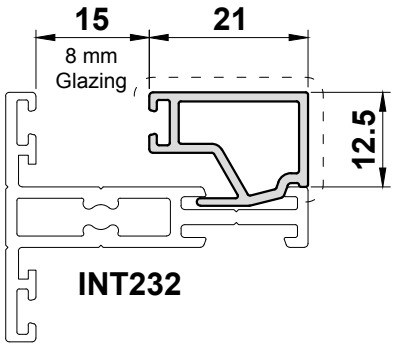

INT232

Scale 1:1

Primary Visible Side - - - - - - - - - - - - - - - - - - Secondary Visible Side — · — · — · — · — · — · — · —

INT290

Square Bead

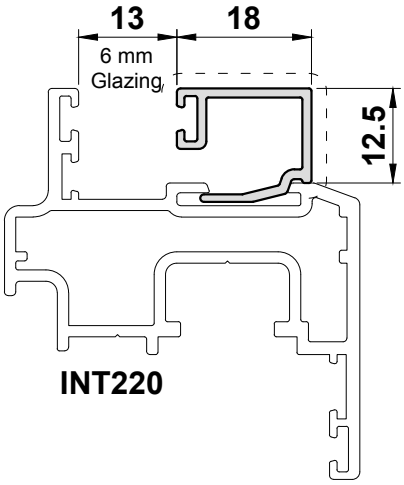

INT291

Square Bead

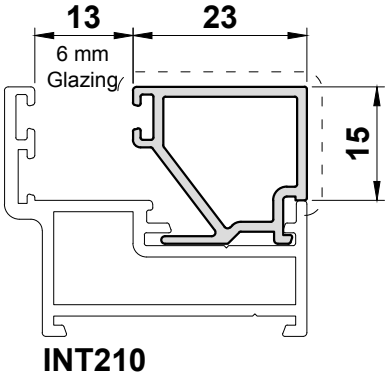

INT292

Square Bead

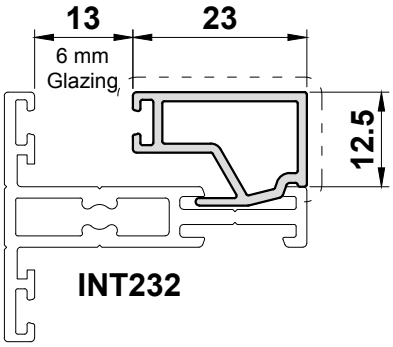

Scale 1:1

Primary Visible Side - - - - - - - - - - - - - - - - - - Secondary Visible Side — · — · — · — · — · — · — · —

INT293

Square Bead

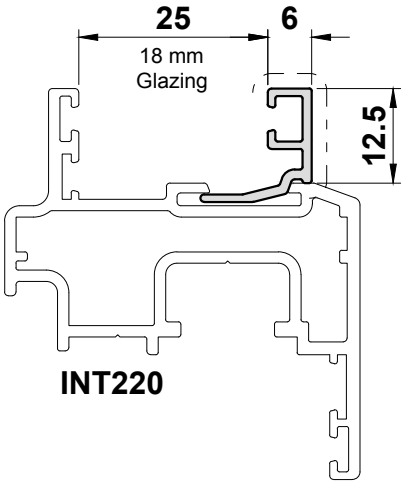

INT294

Square Bead

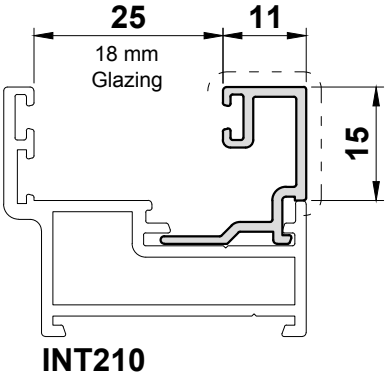

INT295

Square Bead

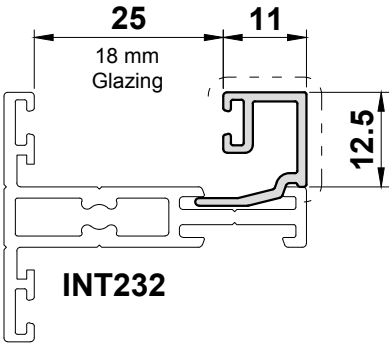

Scale 1:1

Primary Visible Side - - - - - - - - - - - - - - - - - - Secondary Visible Side — · — · — · — · — · — · —

INT310

50x39mm Box

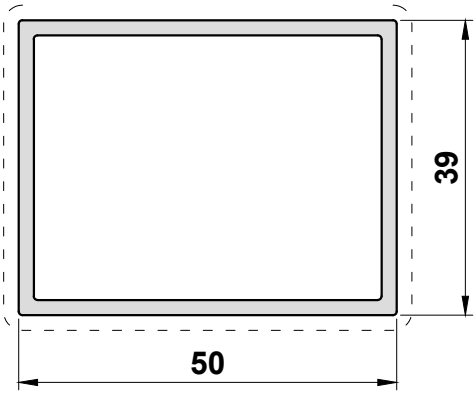

INT312

Top Track

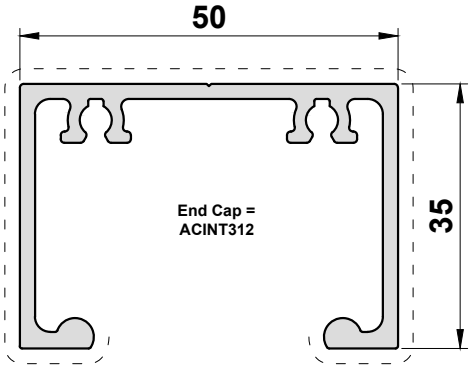

INT320

Sash

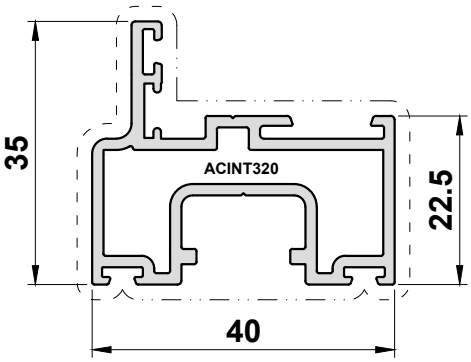

Scale 1:1

Primary Visible Side - - - - - - - - - - - - - - - - - - Secondary Visible Side — · — · — · — · — · — · — · —

INT322

Sliding Door Interlock A

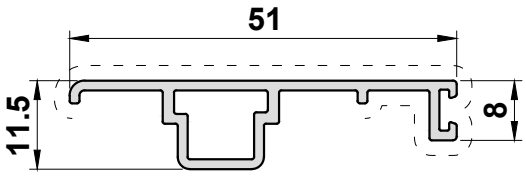

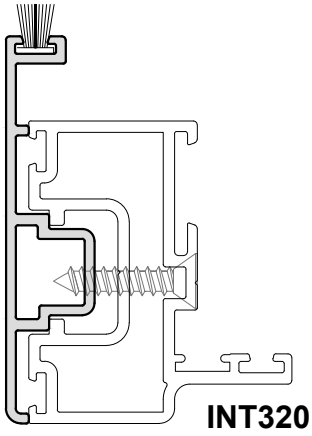

INT323

Sliding Door Interlock B

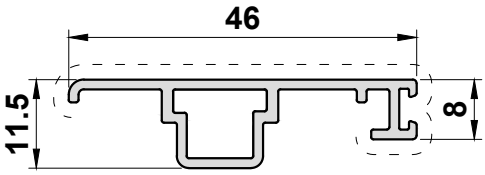

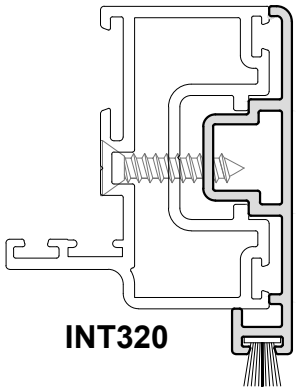

INT357

Concealed Coupler

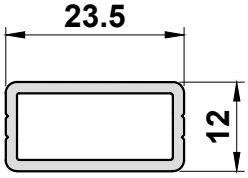

Scale 1:1

Primary Visible Side - - - - - - - - - - - - - - - - - - Secondary Visible Side — · — · — · — · — · — · —

INT410
Pivot Door Rail

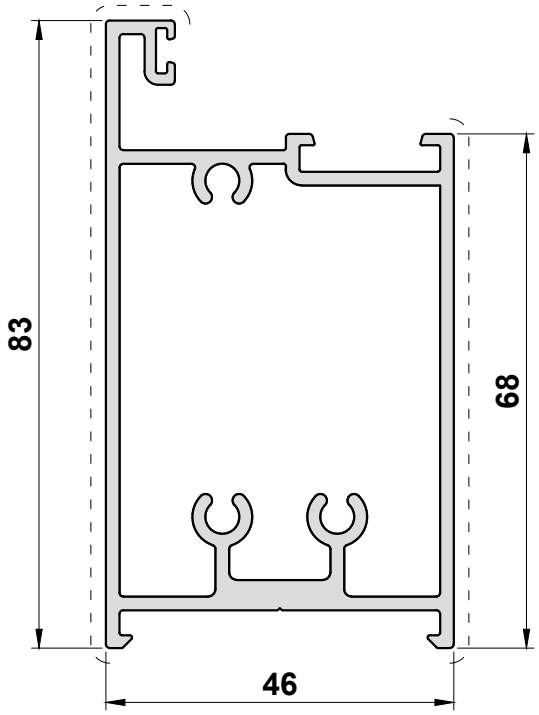

INT411
Woolpile Carrier

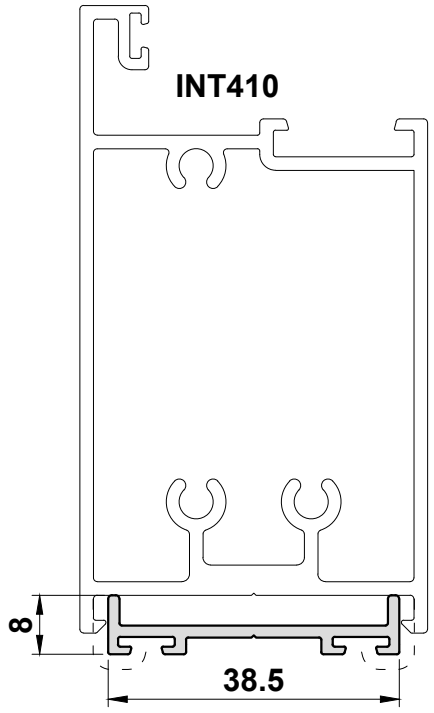

INT412
Pivot Door Frame

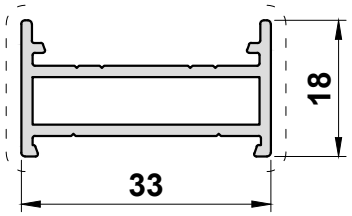

INT413
Upstand Frame

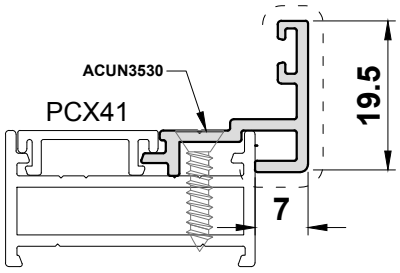

INT430

Scale 1:1

Primary Visible Side **Secondary Visible Side**

INT418
Pivot Door Stile

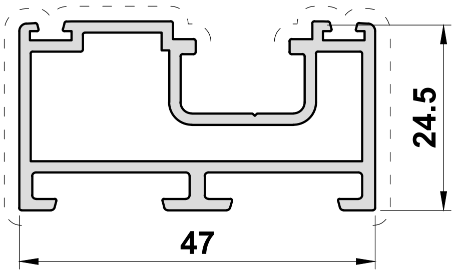

INT420
Pivot Door Stile

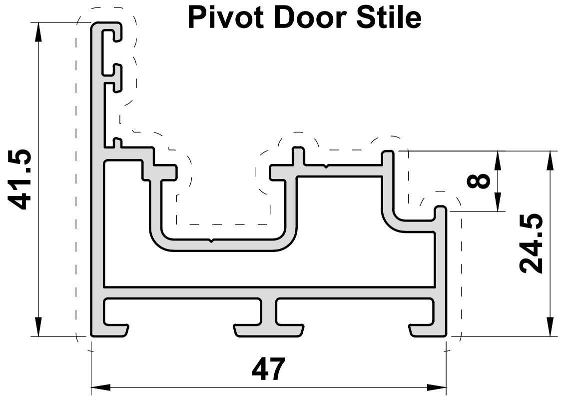

INT430
Transom

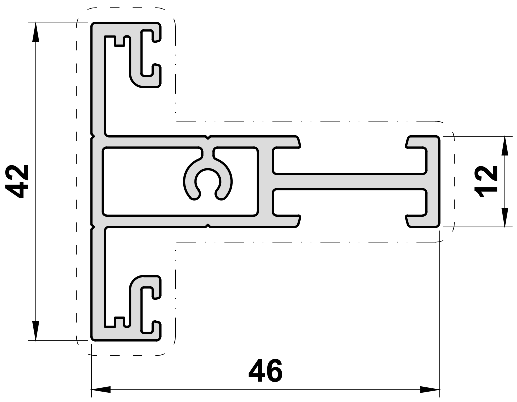

INT438
Pivot Door Lock Housing

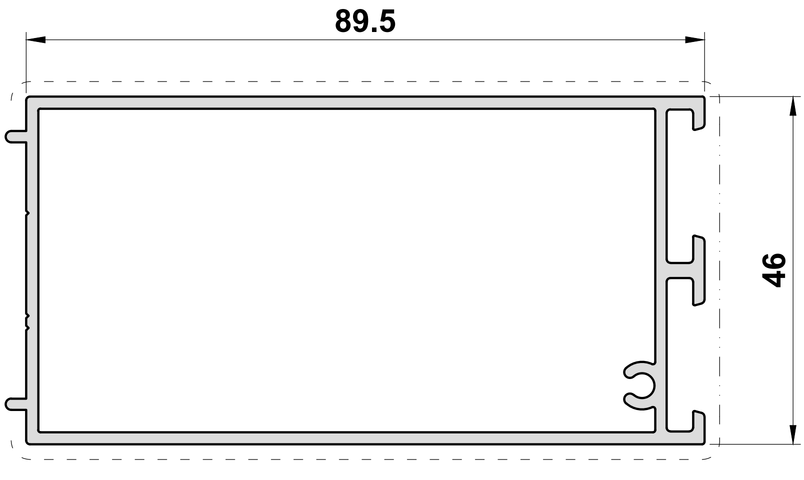

Scale 1:1

ISSUED: DECEMBER 2021

Primary Visible Side - - - - - - - - - - - - - - - - - - Secondary Visible Side — · · — · · — · · — · · — · · — · · —

INT470

Square Bead
(Pivot Door)

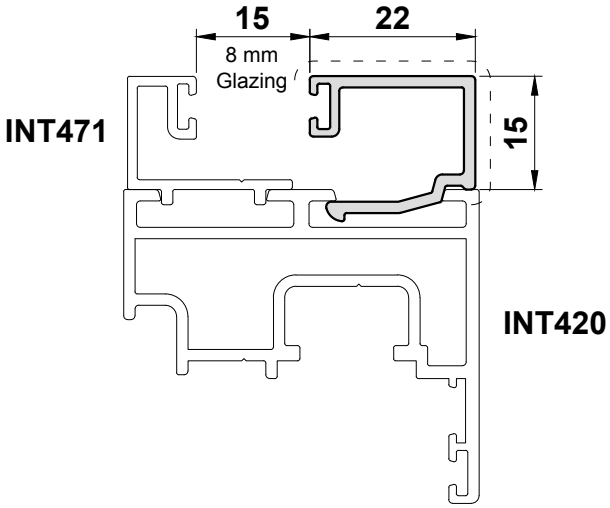

INT471

External Square Bead
(Pivot Door)

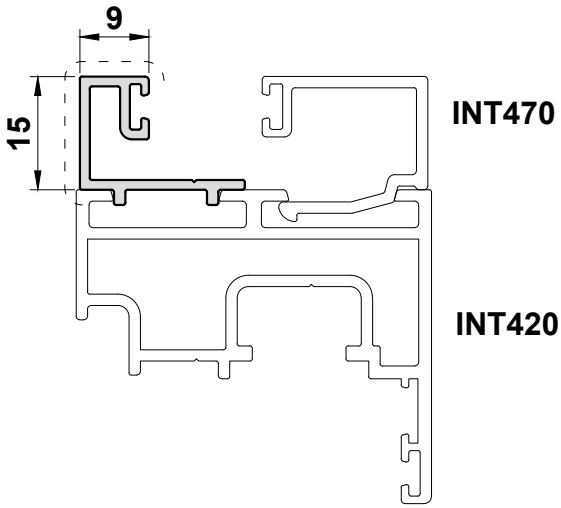

Scale 1:1

Primary Visible Side - - - - - - - - - - - - - - - - - - Secondary Visible Side — · — · — · — · — · — · — · — · —

INT472

Square Bead
(Pivot Door)

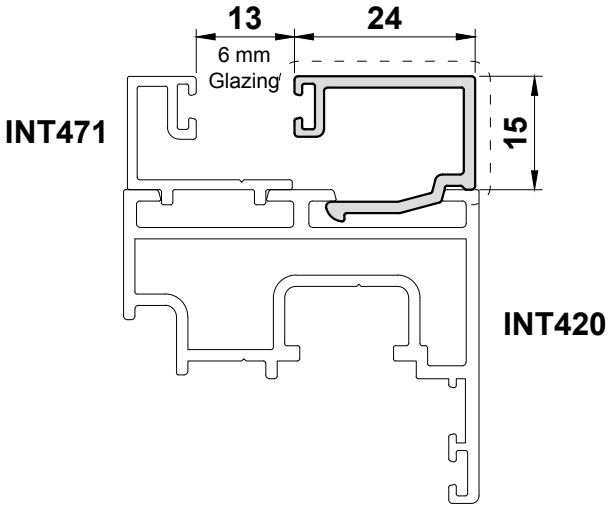

INT473

Square Bead
(Pivot Door)

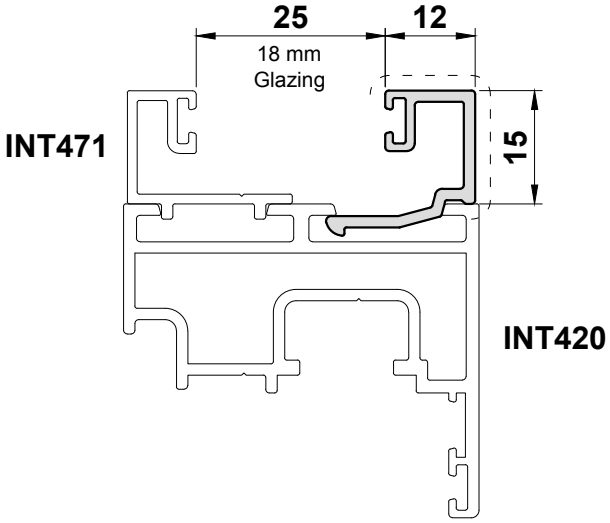

Scale 1:1

Primary Visible Side - - - - - - - - - - - - - - - - - - Secondary Visible Side — · — · — · — · — · — · — · —

PCX15

Sash Infill

INT220

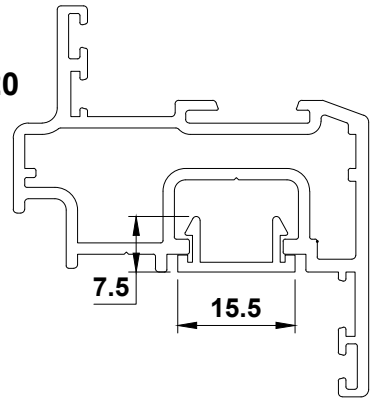

PCX41

Outer Frame Infill

INT210

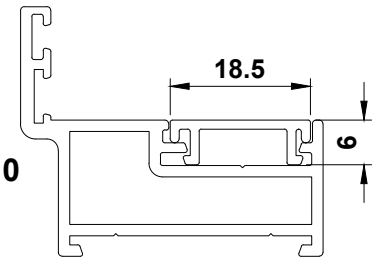

Scale 1:1

PROFILE : SCALED PROFILE DRAWINGS

Primary Visible Side - **Secondary Visible Side** — · · — · · — · · — · · — · · — · · — · · —

Scale 1:1

Section B

Accessories

Photos & Drawings

Countersunk Screws

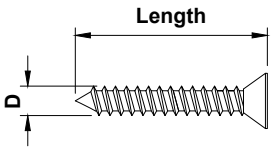

Gauge	'D' (mm)
No.6	3.5
No.7	3.8
No.8	4
No.10	5
No.12	6

Part Number	Gauge	X	Length	Description	Box Qty.
ACUN3530	No.6	X	5/8"	Countersunk Pozi Self Tapper S/S	100
MUA025SSZ	No.6	X	1"	Countersunk Pozi Self Tapper S/S	100
ACET067	No.7	X	1/2"	Countersunk Pozi Self Tapper S/S	100
ACET060	No.7	X	1"	Countersunk Pozi Self Tapper S/S	100
ACET066	No.7	X	1 1/2"	Countersunk Pozi Self Tapper S/S	100
MUA067SSZ	No.7	X	2"	Countersunk Pozi Self Tapper S/S	100
ACPD815	No.7	X	3/4"	Countersunk Pozi Self Tapper S/S	100
ACET064	No.8	X	5/8"	Countersunk Pozi Self Tapper S/S	100
ACUN3512	No.8	X	1 1/4"	Countersunk Pozi Self Tapper S/S	100
ACUN3513	No.8	X	1 3/4"	Countersunk Pozi Self Tapper S/S	100
ACET072	No.8	X	2 1/2"	Countersunk Pozi Self Tapper S/S	100
ACET490	4.3mm	X	16mm	Countersunk PH2 Polyamide Screw	1000
ACET290	4.3mm	X	20mm	Countersunk PH2 Polyamide Screw	100
ACET390	4.3mm	X	25mm	Countersunk PH2 Polyamide Screw	200
ACET190	4.3mm	X	45mm	Countersunk PH2 Polyamide Screw	1000
ACVS062	4.3mm	X	65mm	Countersunk PH2 Polyamide Screw	1000
ACET048	No.10	X	3/8"	Countersunk Pozi Self Tapper S/S	100
ACIM062	No.10	X	1 1/4"	Countersunk Pozi Self Tapper S/S	100
ACET062	No.10	X	2"	Countersunk Pozi Self Tapper S/S	100
ACET076	No.10	X	2 1/2"	Countersunk Pozi Self Tapper S/S	100

Pan Head Screws

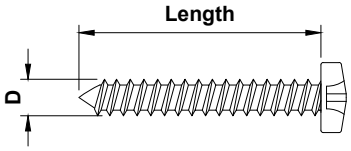

Gauge	'D' (mm)
No.6	3.5
No.7	3.8
No.8	4
No.10	5
No.12	6

Part Number	Gauge	X	Length	Description	Box Qty.
ACET068	No.8	X	3/8"	Pozi Flange AB	100
ACET063	No.8	X	1/2"	Pan Head Self Tapper	100
ACET070	No.8	X	1/2"	Pozi Flange Self Tapper S/S	100
ACUN3535	No.8	X	5/8"	Pan Head Pozi S/S	100
ACET099	No.8	X	3/4"	Pozi Flange Self Tapper S/S	100
ACDR050	4.8mm	X	32mm	Pan Head Pozi S/S	200
PUA028	No.10	X	1"	Pan Head Pozi S/S	100
ACDR052	No.10	X	2"	Pan Head Self Tapper S/S	200
ACET079	No.10	X	2 1/2"	Pan Head Pozi S/S	100
ACW20160	No.12	X	1"	Flange Head Self Tapper S/S	100
ACMC109	6.3mm	X	38mm	DIN7981 - Pan Head Self Tapper	200

Machine Screws

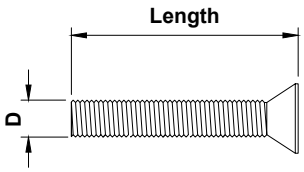

Thread	'D' (mm) Nominal
M4	4
M5	5
M6	6
M8	8
M10	10

Part Number	Thread	X	Length	Description	Box Qty.
ACET122	M4	X	10	CSK Pozi Machine Screw	100
ACET123	M4	X	20	CSK Pozi Machine Screw	100
ACDV264	M4	X	35	CSK Pozi Machine Screw	100
ACSG071	M4	X	40	CSK Pozi Machine Screw	100
ACDV266	M4	X	45	CSK Pozi Machine Screw	100
ACDV262	M4	X	50	CSK Pozi Machine Screw	100
ACDV265	M4	X	60	CSK Pozi Machine Screw	100
ACDR051	M5	X	10	CSK Pozi Machine Screw	100
ACET069	M5	X	12	CSK Pozi Machine Screw	100
HEA132	M5	X	16	CSK Pozi Machine Screw	100
WCA134	M5	X	20	CSK Pozi Machine Screw	100
WCA143	M5	X	25	CSK Pozi Machine Screw	50
ACVS061	M5	X	40	CSK Pozi Machine Screw	100
ACET133	M5	X	50	CSK Pozi Machine Screw	100
ACET220	M5	X	60	CSK Pozi Machine Screw	100
ACET238	M5	X	70	CSK Pozi Machine Screw	100
ACMX861	M5	X	80	DIN965 - CSK Machine Screw	10
ACMX862	M5	X	90	DIN965 - CSK Machine Screw	10
ACUN3503	M6	X	10	CSK Socket Machine Screw	24
ACUN3501	M6	X	13	CSK Flange Socket Machine Screw	48
ACMX852	M6	X	16	DIN965 - CSK Machine Screw	10
HEA390	M6	X	16	CSK Socket Machine Screw	32
ACET235	M6	X	60	CSK Pozi Machine Screw	100
ACET237	M6	X	70	CSK Pozi Machine Screw	100

Glazing Gaskets

Retaining Gasket
Commonly known as an E Gasket.
Retaining gaskets create a seal between the glass and the aluminium profile.

Wedge Gasket
Wedge Gaskets help to hold the bead in place by providing tension between the bead and the glazing unit.

High Line	2mm		ACVG231
			200m
			BL
	3mm		ACVG31
			200m
			BL
	4mm		ACVG131
			100m
			BL
Low Line	2mm		ACET843
			200m
			BL
	3mm		ACET842
			200m
			BL
	4mm		ACET841
			200m
			BL
	4mm	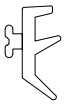	ACET835
			200m
			BL

Thickness	Drawing 1:1	Part number
		Coil length
		Available Colours

PLEASE SEE GLAZING CHART IN SECTION E FOR FURTHER INFORMATION

High Line	3mm		ACVG32
			100m
			BL
	3mm		ACVG32N
			100m
			BL
	4mm		ACVG33
			100m
			BL
	4mm		ACVG33N
			100m
			BL
	5mm		ACVG34
			100m
			BL
	5mm		ACVG34N
			100m
			BL
	6mm		ACVG340
			100m
			BL
	6mm		ACVG340N
			100m
			BL
Low Line	4mm - 3mm		ACW20038
			50m
			BL
	5mm		ACET840N
			200m
			BL

AluSpace Interior Screen

ACCESSORIES : PHOTOS & DRAWINGS

Image	Part Code	Pack	Unit	Application	Colour
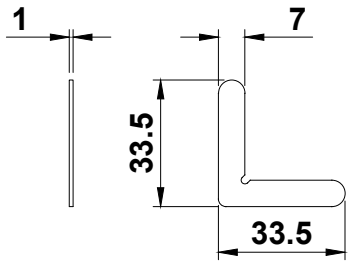	**ACET045** **Stainless Steel Chevron**	**100**	**pack**	**INT210** **INT218**	MF ✓ SA KL HP SSC SMC W Z PC
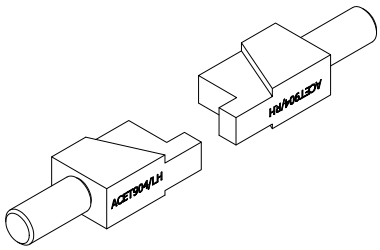	**ACET904** **Punch Tool**	**1**	**pair**	**INT218**	MF ✓ SA KL HP SSC SMC W Z PC
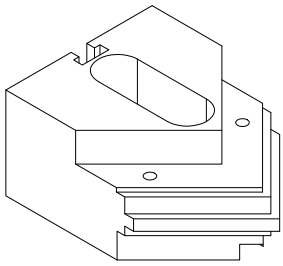	**ACINT201** **V-Block**	**1**	**each**	**INT210** **INT218** **INT220** **INT320**	MF ✓ SA KL HP SSC SMC W Z PC
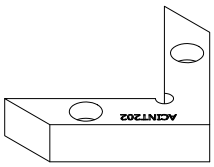	**ACINT202** **Packer**	**1**	**each**	**INT210**	MF ✓ SA KL HP SSC SMC W Z PC
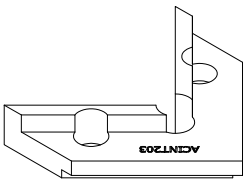	**ACINT203** **Packer**	**1**	**each**	**INT218** **INT320**	MF ✓ SA KL HP SSC SMC W Z PC

T-BARS
ACVG65=2.5mm
ACVG66=3.0mm
ACVL150=4.0mm

Screw (Grub)

MF = Mill Finish
SA = Silver Anodised
KL = Basic Colour
HP = Special Colour
SSC = Smooth Satin Chrome
SMC = Smokey Chrome
PC = Polished Chrome
W = White
Z = Black

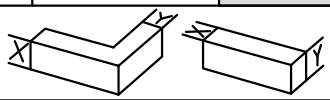

Image	Part Code	Pack	Unit	Application	Colour
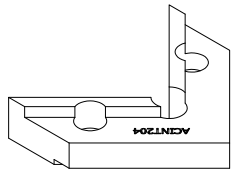	**ACINT204** **Packer**	**1**	**each**	**INT220**	MF ✓ SA KL HP SSC SMC W Z PC
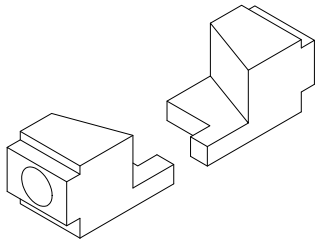	**ACINT206** **Punch Tool**	**1**	**pair**	**INT220**	MF ✓ SA KL HP SSC SMC W Z PC
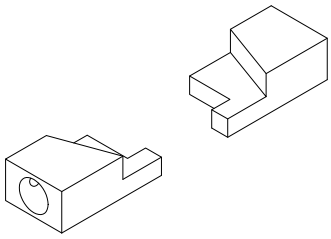	**ACINT207** **Punch Tool**	**1**	**pair**	**INT320**	MF ✓ SA KL HP SSC SMC W Z PC
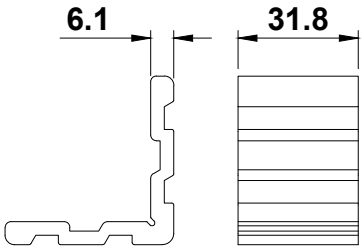	**ACINT210** **Crimping Corner Cleat**	**24**	**pack**	**INT210**	MF ✓ SA KL HP SSC SMC W Z PC
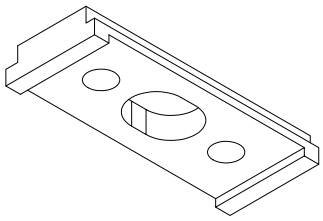	**ACINT211** **Keep Packer**	**1**	**each**	**INT210** **ACINT251**	MF SA KL HP SSC SMC W Z ✓ PC

T-BARS
ACVG65=2.5mm
ACVG66=3.0mm
ACVL150=4.0mm

Screen (Grub)

MF = Mill Finish
SA = Silver Anodised
KL = Basic Colour
HP = Special Colour
SSC = Smooth Satin Chrome
SMC = Smokey Chrome
PC = Polished Chrome
W = White
Z = Black

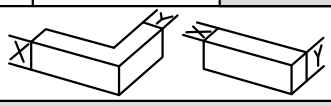

Image	Part Code	Pack	Unit	Application	Colour	
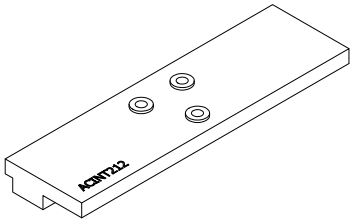	**ACINT212** **Drill Jig**	**1**	**each**	**INT210**	MF	
					SA	
					KL	
					HP	
					SSC	
					SMC	
					W	
					Z	
					PC	
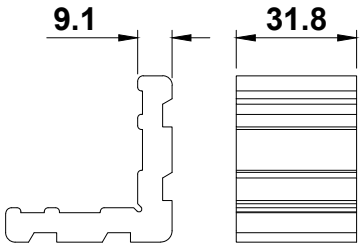	**ACINT218** **Crimping Corner Cleat**	**24**	**pack**	**INT218**	MF	✓
					SA	
					KL	
					HP	
					SSC	
					SMC	
					W	
					Z	
					PC	
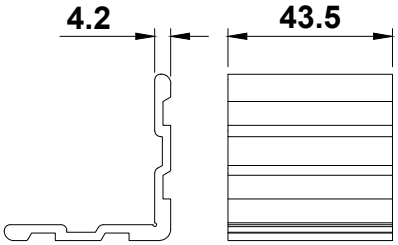	**ACINT220** **Crimping Corner Cleat**	**24**	**pack**	**INT220**	MF	✓
					SA	
					KL	
					HP	
					SSC	
					SMC	
					W	
					Z	
					PC	
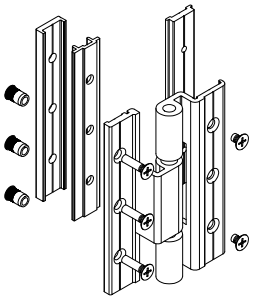	**ACINT221** **Open In Hinge Kit**	**1**	**each**	**INT220**	MF	
					SA	
					KL	✓
					HP	✓
					SSC	
					SMC	
					W	✓
					Z	✓
					PC	
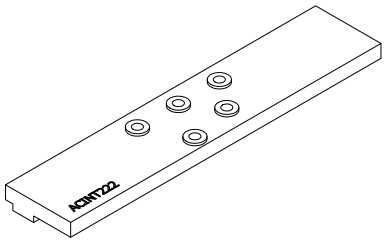	**ACINT222** **Drill Jig**	**1**	**each**	**INT218** **INT220** **INT320**	MF	
					SA	
					KL	
					HP	
					SSC	
					SMC	
					W	
					Z	
					PC	

T-BARS
ACVG65=2.5mm
ACVG66=3.0mm
ACVL150=4.0mm

Screw (Grub)

MF = Mill Finish
SA = Silver Anodised
KL = Basic Colour
HP = Special Colour
SSC = Smooth Satin Chrome
SMC = Smokey Chrome
PC = Polished Chrome
W = White
Z = Black

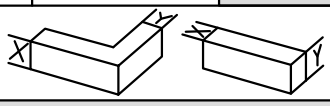

AluSpace Interior Screen

ACCESSORIES : PHOTOS & DRAWINGS

Image	Part Code	Pack	Unit	Application	Colour	
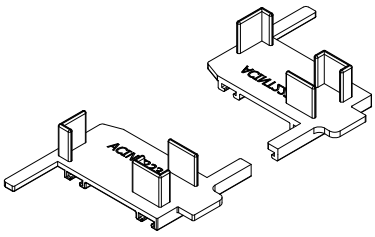	**ACINT223** **End Cap**	**1**	**pair**	**INT220**	MF	
					SA	
					KL	
					HP	
					SSC	
					SMC	
					W	
					Z	✓
					PC	
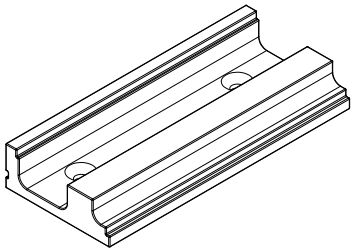	**ACINT224** **Block**	**2**	**pack**	**INT220**	MF	
					SA	
					KL	
					HP	
					SSC	
					SMC	
					W	
					Z	✓
					PC	
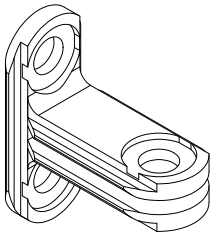	**ACINT230** **Transom Bracket**	**2**	**pack**	**INT218** **INT220** **INT230** **INT232** **INT320**	MF	✓
					SA	
					KL	
					HP	
					SSC	
					SMC	
					W	
					Z	
					PC	
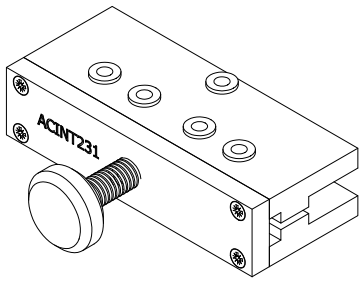	**ACINT231** **Drill Jig**	**1**	**each**	**INT230**	MF	
					SA	
					KL	
					HP	
					SSC	
					SMC	
					W	
					Z	
					PC	
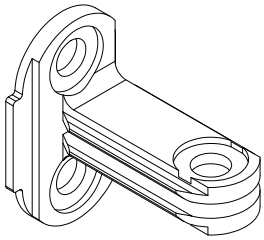	**ACINT232** **Transom Bracket**	**2**	**pack**	**INT210** **INT232**	MF	✓
					SA	
					KL	
					HP	
					SSC	
					SMC	
					W	
					Z	
					PC	

T-BARS
ACVG65=2.5mm
ACVG66=3.0mm
ACVL150=4.0mm

Screen (Grub)

MF = Mill Finish
SA = Silver Anodised
KL = Basic Colour
HP = Special Colour
SSC = Smooth Satin Chrome
SMC = Smokey Chrome
PC = Polished Chrome
W = White
Z = Black

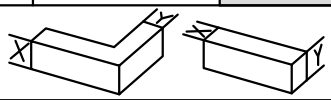

ISSUED: DECEMBER 2021

Image	Part Code	Pack	Unit	Application	Colour	
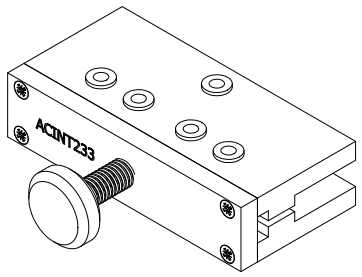	**ACINT233** **Drill Jig**	**1**	**each**	**INT232**	MF	
					SA	
					KL	
					HP	
					EB	
					NP	
					MC	
					W	
					Z	
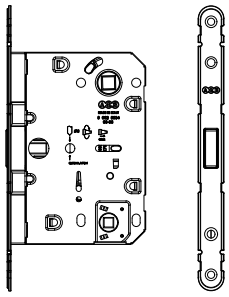	**ACINT237** **Magnetic Sash Bathroom Lock** **70.5 mm Backset**	**1**	**each**	**INT238** **INT438** **ACINT239**	MF	
					SA	
					KL	
					HP	
					EB	
					NP	
					MC	
					W	
					Z	
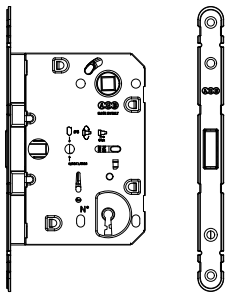	**ACINT238** **Magnetic Sash Key Lock** **70.5 mm Backset**	**1**	**each**	**INT238** **INT438** **ACINT239**	MF	
					SA	
					KL	
					HP	
					EB	
					NP	
					MC	
					W	
					Z	
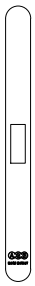	**ACINT239** **Forend Cover**	**1**	**each**	**ACINT238**	MF	
					SA	
					KL	
					HP	
					EB	✓
					NP	✓
					MC	✓
					W	
					Z	
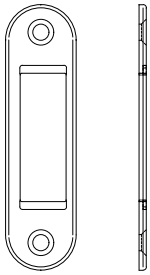	**ACINT240** **Striker Cover Plate**	**1**	**each**	**INT210** **INT412** **ACINT241**	MF	
					SA	
					KL	
					HP	
					EB	✓
					NP	✓
					MC	✓
					W	
					Z	

T-BARS
ACVG65=2.5mm
ACVG66=3.0mm
ACVL150=4.0mm

Screw (Grub)

MF = Mill Finish
SA = Silver Anodised
KL = Basic Colour
HP = Special Colour
EB = Enamel Brass
NP = Nickel Plated
MC = Matt Chrome
W = White
Z = Black

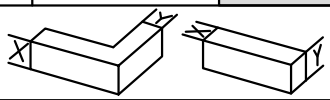

Image	Part Code	Pack	Unit	Application	Colour	
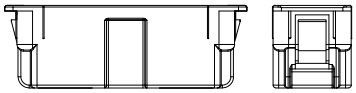	**ACINT241** **Latch Cover Tray with Magnet**	**1**	**each**	**ACINT240**	MF	
					SA	
					KL	
					HP	
					EB	
					NP	
					MC	
					W	
					Z	✓
	ACINT242 **Key for Magnetic Lock**	**1**	**each**	**ACINT238**	MF	
					SA	
					KL	
					HP	
					EB	✓
					NP	✓
					MC	
					W	
					Z	
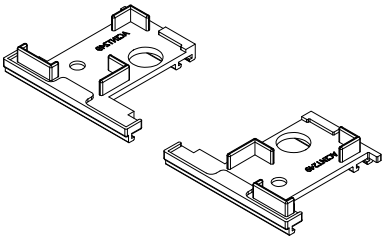	**ACINT249** **End Cap**	**1**	**pair**	**INT249**	MF	
					SA	
					KL	
					HP	
					EB	
					NP	
					MC	
					W	
					Z	✓
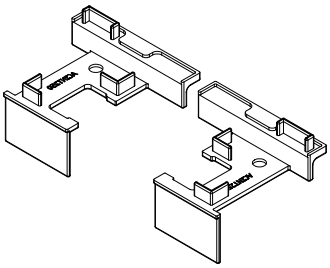	**ACINT250** **End Cap**	**1**	**pair**	**INT249**	MF	
					SA	
					KL	
					HP	
					EB	
					NP	
					MC	
					W	
					Z	✓
					MF	
					SA	
					KL	
					HP	
					EB	
					NP	
					MC	
					W	
					Z	

T-BARS
ACVG65=2.5mm
ACVG66=3.0mm
ACVL150=4.0mm

Screen (Grub)

MF = Mill Finish
SA = Silver Anodised
KL = Basic Colour
HP = Special Colour
EB = Enamel Brass
NP = Nickel Plated
MC = Matt Chrome
W = White
Z = Black

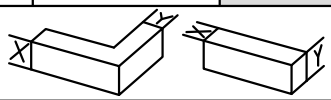

Image	Part Code	Pack	Unit	Application	Colour
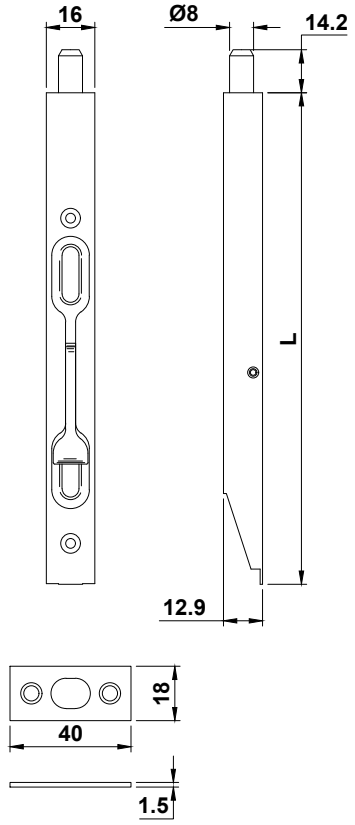	**Flush Bolt** **16 mm Forend** **ACINT251** **L = 162.5mm** **ACINT252** **L = 202.5mm** **ACINT253** **L = 252.5mm** **ACINT254** **L = 302.5mm** **ACINT255** **L = 402.5mm**	**1**	**each**	**INT249**	MF SA KL HP EB ✓ NP ✓ MC ✓ W Z ✓
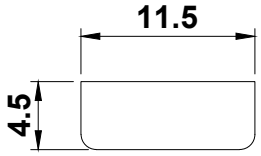	**ACINT260** **11.5 x 4.5mm Packer**	**100**	**pack**	**INT210** **INT218** **INT220** **INT275**	MF SA KL HP EB NP MC W Z
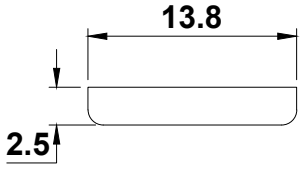	**ACINT261** **13.8 x 2.5mm Packer**	**100**	**pack**	**INT230** **INT232**	MF SA KL HP EB NP MC W Z

T-BARS
ACVG65=2.5mm
ACVG66=3.0mm
ACVL150=4.0mm

Screw (Grub)

MF	**= Mill Finish**	**W**	**= White**
SA	**= Silver Anodised**	**Z**	**= Black**
KL	**= Basic Colour**		
HP	**= Special Colour**		
EB	**= Enamel Brass**		
NP	**= Nickel Plated**		
MC	**= Matt Chrome**		

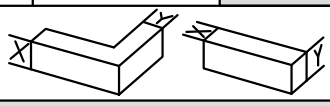

AluSpace Interior Screen

ACCESSORIES : PHOTOS & DRAWINGS

Image	Part Code	Pack	Unit	Application	Colour	
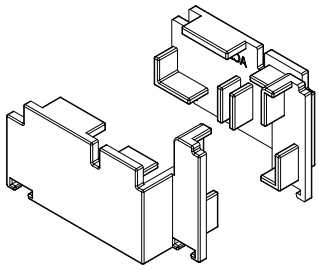	**ACINT274** **End Cap**	**1**	**pair**	**INT274**	MF	
					SA	
					KL	
					HP	
					SSC	
					SMC	
					W	
					Z	✓
					PC	
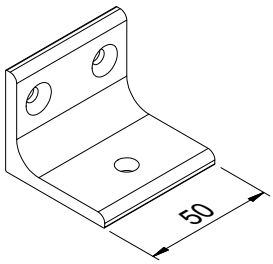	**ACINT311** **Bracket**	**1**	**each**	**INT312**	MF	✓
					SA	
					KL	
					HP	
					SSC	
					SMC	
					W	
					Z	✓
					PC	
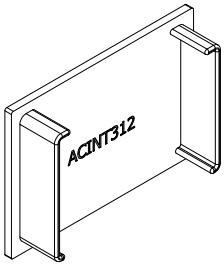	**ACINT312** **End Cap**	**2**	**pack**	**INT312**	MF	
					SA	
					KL	
					HP	
					SSC	
					SMC	
					W	
					Z	✓
					PC	
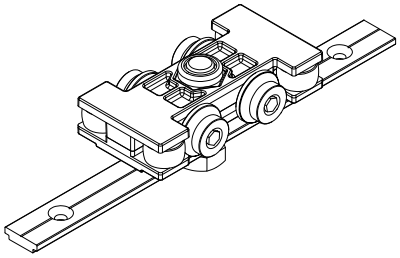	**ACINT313** **Top Carrier Roller**	**1**	**each**	**INT312**	MF	
					SA	
					KL	
					HP	
					SSC	
					SMC	
					W	
					Z	
					PC	
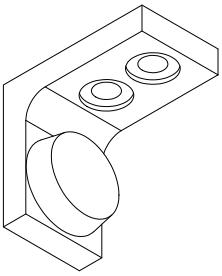	**ACINT314** **Buffer Stop**	**2**	**pack**	**INT312**	MF	
					SA	
					KL	
					HP	
					SSC	
					SMC	
					W	
					Z	✓
					PC	

T-BARS
ACVG65=2.5mm
ACVG66=3.0mm
ACVL150=4.0mm

Screen (Grub)

MF = Mill Finish
SA = Silver Anodised
KL = Basic Colour
HP = Special Colour
SSC = Smooth Satin Chrome
SMC = Smokey Chrome
PC = Polished Chrome
W = White
Z = Black

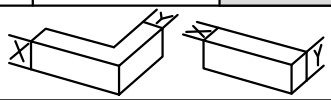

ISSUED: DECEMBER 2021

Image	Part Code	Pack	Unit	Application	Colour
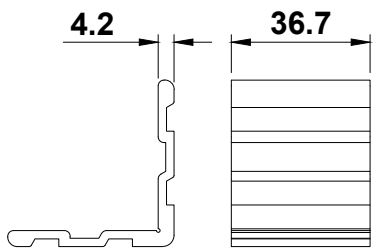	**ACINT320** **Crimping Corner Cleat**	**24**	**pack**	**INT320**	MF ✓ SA KL HP SSC SMC W Z PC
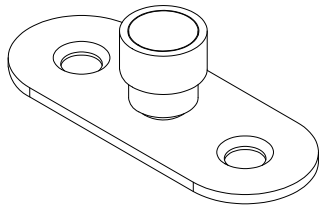	**ACINT325** **Bottom Guide**	**1**	**each**	**INT320**	MF ✓ SA KL HP SSC SMC W Z PC
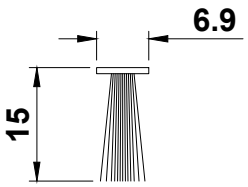	**ACINT411** **6.9mm x 15mm Black Woolpile**	**100**	**m**	**INT411**	MF SA KL HP SSC SMC W Z ✓ PC
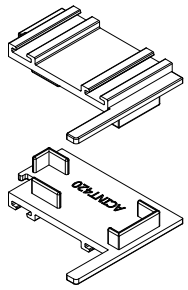	**ACINT420** **End Cap**	**1**	**pair**	**INT420**	MF SA KL HP SSC SMC W Z ✓ PC
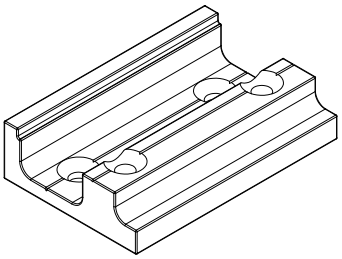	**ACINT421** **Block**	**4**	**pack**	**INT418** **INT420**	MF SA KL HP SSC SMC W Z PC

T-BARS
ACVG65=2.5mm
ACVG66=3.0mm
ACVL150=4.0mm

Screw (Grub)

MF = Mill Finish
SA = Silver Anodised
KL = Basic Colour
HP = Special Colour
SSC = Smooth Satin Chrome
SMC = Smokey Chrome
PC = Polished Chrome
W = White
Z = Black

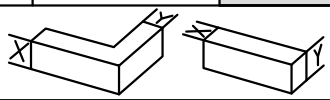

AluSpace Interior Screen

ACCESSORIES : PHOTOS & DRAWINGS

Image	Part Code	Pack	Unit	Application	Colour	
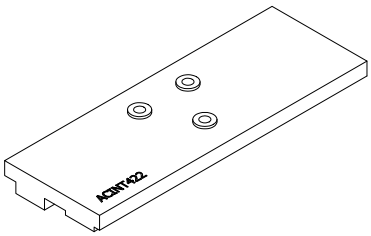	**ACINT422** **Drill Jig**	**1**	**each**	**INT410** **INT418** **INT420**	MF	
					SA	
					KL	
					HP	
					SSC	
					SMC	
					W	
					Z	
					PC	
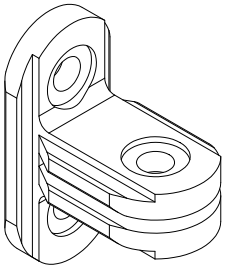	**ACINT430** **Transom Bracket**	**2**	**pack**	**INT420** **INT430**	MF	✓
					SA	
					KL	
					HP	
					SSC	
					SMC	
					W	
					Z	
					PC	
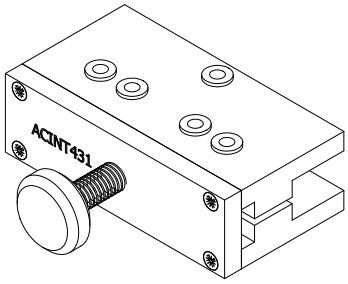	**ACINT431** **Drill Jig**	**1**	**each**	**INT430**	MF	
					SA	
					KL	
					HP	
					SSC	
					SMC	
					W	
					Z	
					PC	
					MF	
					SA	
					KL	
					HP	
					SSC	
					SMC	
					W	
					Z	
					PC	
					MF	
					SA	
					KL	
					HP	
					SSC	
					SMC	
					W	
					Z	
					PC	

T-BARS
ACVG65=2.5mm
ACVG66=3.0mm
ACVL150=4.0mm

Screen (Grub)

MF = Mill Finish
SA = Silver Anodised
KL = Basic Colour
HP = Special Colour
SSC = Smooth Satin Chrome
SMC = Smokey Chrome
PC = Polished Chrome
W = White
Z = Black

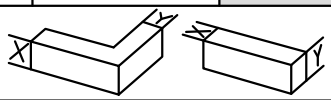

ISSUED: DECEMBER 2021

Image	Part Code	Pack	Unit	Application	Colour	
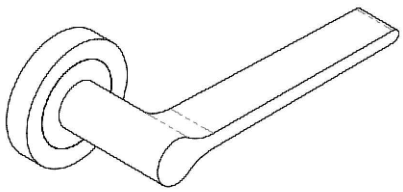	**ACINT501** **Lever On Round Rose Handle**	**1**	**pair**	**ACINT502** **ACINT503**	AB	✓
					SB	✓
					SC	
					SN	✓
					PB	
					PN	✓
					PC	
					MBRZ	✓
					MB	✓
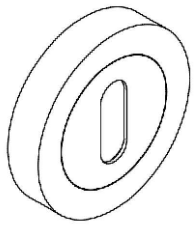	**ACINT502** **Lock Profile Escutcheon on Round Rose**	**1**	**each**	**ACINT501**	AB	✓
					SB	✓
					SC	
					SN	✓
					PB	
					PN	✓
					PC	
					MBRZ	✓
					MB	✓
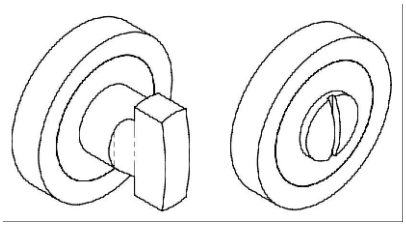	**ACINT503** **Turn & Release on Round Rose**	**1**	**set**	**ACINT501**	AB	✓
					SB	✓
					SC	
					SN	✓
					PB	
					PN	✓
					PC	
					MBRZ	✓
					MB	✓
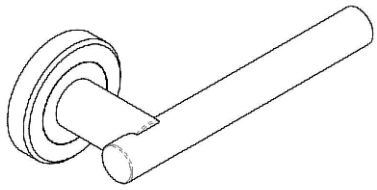	**ACINT504** **Lever On Round Rose Handle**	**1**	**pair**	**ACINT506** **ACINT507**	AB	✓
					SB	
					SC	✓
					SN	
					PB	
					PN	
					PC	✓
					MBRZ	
					MB	✓
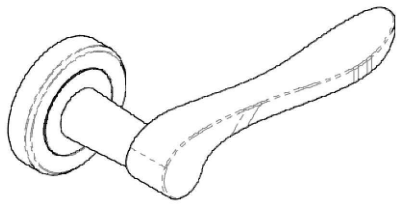	**ACINT505** **Lever On Round Rose Handle**	**1**	**pair**	**ACINT506** **ACINT507**	AB	✓
					SB	
					SC	✓
					SN	
					PB	
					PN	
					PC	✓
					MBRZ	
					MB	✓

T-BARS
ACVG65=2.5mm
ACVG66=3.0mm
ACVL150=4.0mm

Screw (Grub)

AB = Antique Brass
SB = Satin Brass
SC = Satin Chrome
SN = Satin Nickel
PB = Polished Brass
PN = Polished Nickel
PC = Polished Chrome
MBRZ = Matt Bronze
MB = Matt Black

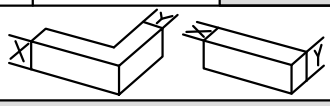

Image	Part Code	Pack	Unit	Application	Colour	
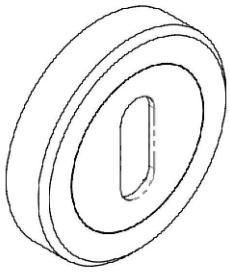	**ACINT506** **Lock Profile Escutcheon on Round Rose**	**1**	**each**	**ACINT504** **ACINT505**	AB SB SC SN PB PN PC MBRZ MB	✓ ✓ ✓ ✓
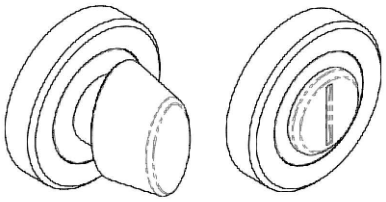	**ACINT507** **Turn & Release on Round Rose**	**1**	**set**	**ACINT504** **ACINT505**	AB SB SC SN PB PN PC MBRZ MB	✓ ✓ ✓ ✓
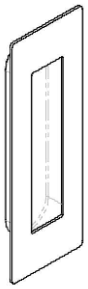	**ACINT521** **180x60mm Rectangular Flush Pull Handle** **Finishes: Bright or Satin Stainless Steel**	**1**	**each**		AB SB SC SN PB PN PC MBRZ MB	
	ACINT522 **Square Mitred Pull Handle (450mm centres)** **Finishes:** **Matt Black or Satin Stainless Steel**	**1**	**each**		AB SB SC SN PB PN PC MBRZ MB	
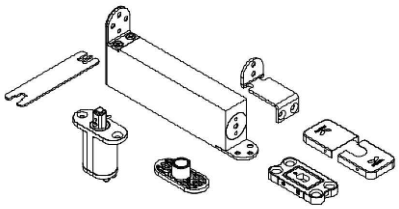	**ACSIN201** **Pivot System (Max 100 Kg)**	**1**	**each**	**INT410**	AB SB SC SN PB PN PC MBRZ MB	

T-BARS
ACVG65=2.5mm
ACVG66=3.0mm
ACVL150=4.0mm

Screen (Grub)

AB = Antique Brass
SB = Satin Brass
SC = Satin Chrome
SN = Satin Nickel
PB = Polished Brass
PN = Polished Nickel
PC = Polished Chrome
MBRZ = Matt Bronze
MB = Matt Black

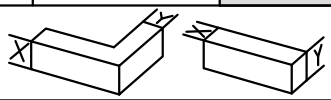

Image	Part Code	Pack	Unit	Application	Colour
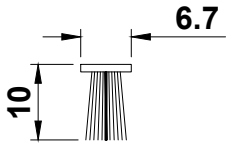	**ACUG842** **6.7mm x 10mm Black Woolpile with Fin**	**50**	**m**	**INT411**	MF SA KL HP SSC SMC W Z ✓ PC
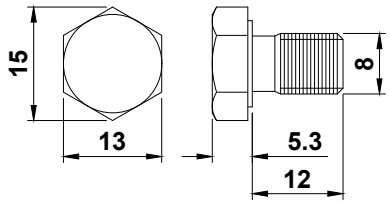	**ACUN3545** **M8 x 12 mm Hexagonal Head Setscrew**	**100**	**pack**	**ACUN3546**	MF SA KL HP SSC SMC W Z PC
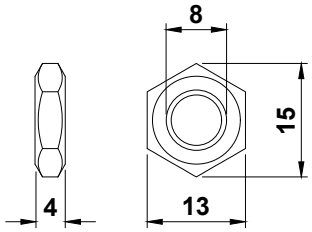	**ACUN3546** **M8 Hexagonal Lock Thin Nut**	**100**	**pack**	**ACUN3545**	MF SA KL HP SSC SMC W Z PC
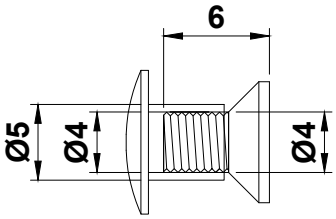	**ACUN3547** **M4 Connecting Screws**	**100**	**pack**	**ACINT230** **ACINT232**	MF SA KL HP SSC SMC W Z PC
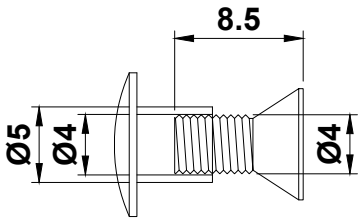	**ACUN3551** **M4 Connecting Screws**	**100**	**pack**	**ACINT430**	MF SA KL HP SSC SMC W Z PC

T-BARS
ACVG65=2.5mm
ACVG66=3.0mm
ACVL150=4.0mm

Screw (Grub)

MF = Mill Finish
SA = Silver Anodised
KL = Basic Colour
HP = Special Colour
SSC = Smooth Satin Chrome
SMC = Smokey Chrome
PC = Polished Chrome
W = White
Z = Black

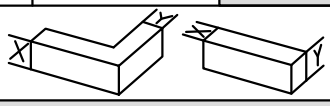

AluSpace Interior Screen

ACCESSORIES : PHOTOS & DRAWINGS

Image	Part Code	Pack	Unit	Application	Colour	
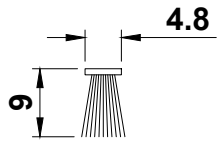	**ACVS033** **4.8mm x 9mm Black Woolpile with Fin**	**150**	**m**	**INT274** **INT275**	MF SA KL HP SSC SMC W Z PC	 ✓
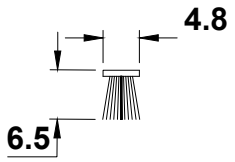	**ACVS034** **4.8mm x 6.5mm Black Woolpile with Fin**	**150**	**m**	**INT320** **INT322** **INT323**	MF SA KL HP SSC SMC W Z PC	 ✓
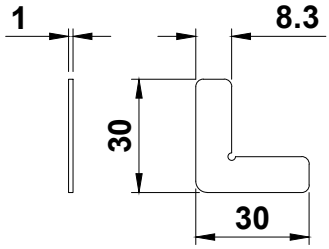	**ACW20024** **Stainless Steel Chevron**	**100**	**pack**	**INT220**	MF SA KL HP SSC SMC W Z PC	✓
					MF SA KL HP SSC SMC W Z PC	
					MF SA KL HP SSC SMC W Z PC	

T-BARS
ACVG65=2.5mm
ACVG66=3.0mm
ACVL150=4.0mm

Screen (Grub)

MF = Mill Finish
SA = Silver Anodised
KL = Basic Colour
HP = Special Colour
SSC = Smooth Satin Chrome
SMC = Smokey Chrome
PC = Polished Chrome
W = White
Z = Black

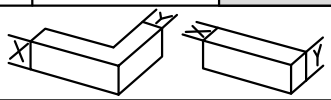

ISSUED: DECEMBER 2021

AluSpace Interior Screen

STANDARD ACCESSORIES

Image	Part Code	Pack	Unit	Application	Colour
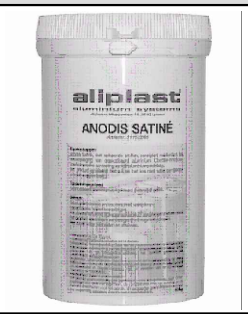	**ACMX09700** **Alu-Polish** **Cleaning emulsion for aluminium oxide.**	**1**	**each**		MF ✓ SA KL HP SSC SMC W Z PC
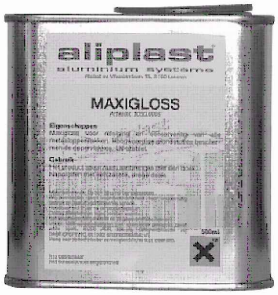	**ACMX09761** **Maxi Gloss** **Protection for painted and anodised surfaces.**	**1**	**each**		MF SA KL HP SSC SMC W Z PC
	ACMX09762 **Alu. Bright** **Cleaner for rough, anodised or enamelled aluminium frames.**	**1**	**each**		MF SA KL HP SSC SMC W Z PC
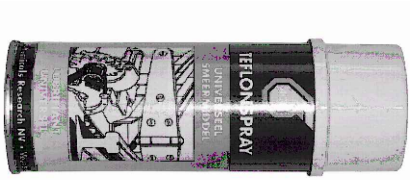	**ACMX09763** **Teflon Spray** **Lubricant**	**1**	**each**		MF SA KL HP SSC SMC W Z PC
	ACMX09764 **Maxi Cleaner** **For cleaning oily surfaces.**	**1**	**each**		MF SA KL HP SSC SMC W Z PC

T-BARS
ACVG65=2.5mm
ACVG66=3.0mm
ACVL150=4.0mm

Screw (Grub)

MF	**= Mill Finish**	**W**	**= White**
SA	**= Silver Anodised**	**Z**	**= Black**
KL	**= Basic Colour**		
HP	**= Special Colour**		
SSC	**= Smooth Satin Chrome**		
SMC	**= Smokey Chrome**		
PC	**= Polished Chrome**		

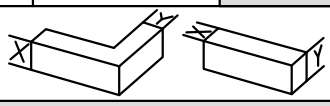

AluSpace Interior Screen

STANDARD ACCESSORIES

Image	Part Code	Pack	Unit	Application	Colour
	ACMX09765 **Glue Cleaner** **De-grease and silicone remover (1 Litre).**	1	each		MF SA KL HP SSC SMC W Z PC
	ACMX09770 **Roll & Wrap 100mm**	1	each		MF SA KL HP SSC SMC W Z PC
	ACMX09775 **Grip Handwrap**	1	each		MF SA KL HP SSC SMC W Z PC
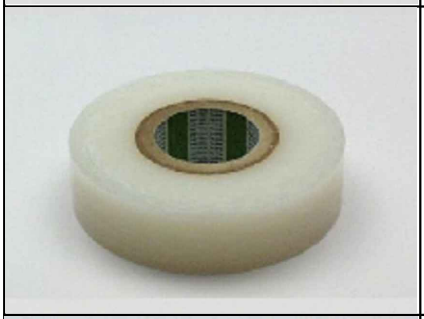	**ACMX09801** **Protective Tape 50mm**	1	each		MF SA KL HP SSC SMC W Z PC
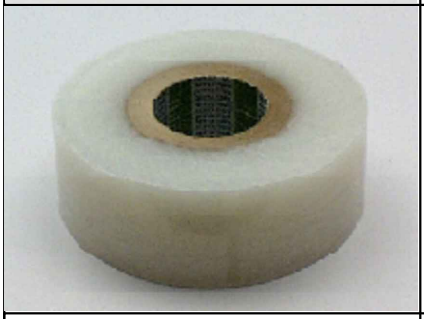	**ACMX09802** **Protective Tape 70mm**	1	each		MF SA KL HP SSC SMC W Z PC

T-BARS
ACVG65=2.5mm
ACVG66=3.0mm
ACVL150=4.0mm

Screw (Grub)

MF = Mill Finish
SA = Silver Anodised
KL = Basic Colour
HP = Special Colour
SSC = Smooth Satin Chrome
SMC = Smokey Chrome
PC = Polished Chrome
W = White
Z = Black

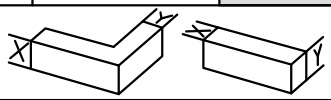

ISSUED: DECEMBER 2021

Image	Part Code	Pack	Unit	Application	Colour	
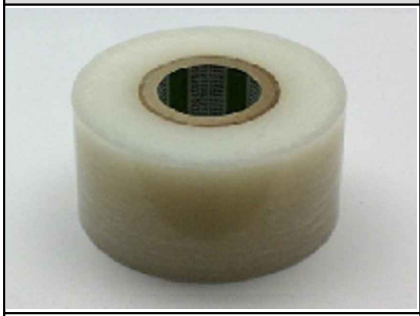	**ACMX09803** **Protective Tape 100mm**	**1**	**each**		MF	
					SA	
					KL	
					HP	
					SSC	
					SMC	
					W	
					Z	
					PC	
	ACSIL05 **Rubber Sealant**	**1**	**each**		MF	
					SA	
					KL	
					HP	
					SSC	
					SMC	
					W	
					Z	
					PC	
	ACSIL04 **Sealing Glue** **Order with suffix of KL colour (eg.ACSIL04KL005) or BL=Black/WP=White/ CL=Clear**	**1**	**each**		MF	
					SA	
					KL	✓
					HP	
					SSC	
					SMC	
					W	✓
					Z	✓
					PC	
	ACSIL08 **Silicon Gun**	**1**	**each**		MF	
					SA	
					KL	
					HP	
					SSC	
					SMC	
					W	
					Z	
					PC	
	ACSIL013 **Glue for Mitre**	**1**	**each**		MF	
					SA	
					KL	
					HP	
					SSC	
					SMC	
					W	
					Z	
					PC	

T-BARS
ACVG65=2.5mm
ACVG66=3.0mm
ACVL150=4.0mm

Screw (Grub)

MF = Mill Finish
SA = Silver Anodised
KL = Basic Colour
HP = Special Colour
SSC = Smooth Satin Chrome
SMC = Smokey Chrome
PC = Polished Chrome
W = White
Z = Black

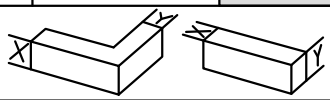

	ACSIL014 **Anti-Corrosion Coating**	**1**	**each**		MF	✓
					SA	
					KL	
					HP	
					SSC	
					SMC	
					W	
					Z	
					PC	
	ACUN3900 **Gasket Roller**	**1**	**Each**	**Wedge Gaskets**	MF	
					SA	
					KL	
					HP	
					SSC	
					SMC	
					W	
					Z	
					PC	
					MF	
					SA	
					KL	
					HP	
					SSC	
					SMC	
					W	
					Z	
					PC	
					MF	
					SA	
					KL	
					HP	
					SSC	
					SMC	
					W	
					Z	
					PC	
					MF	
					SA	
					KL	
					HP	
					SSC	
					SMC	
					W	
					Z	
					PC	

T-BARS
ACVG65=2.5mm
ACVG66=3.0mm
ACVL150=4.0mm

Screen (Grub)

MF = Mill Finish
SA = Silver Anodised
KL = Basic Colour
HP = Special Colour
SSC = Smooth Satin Chrome
SMC = Smokey Chrome
PC = Polished Chrome
W = White
Z = Black

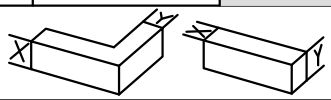

Section C

Sections

Scale Elevations

Open In - Swing Door

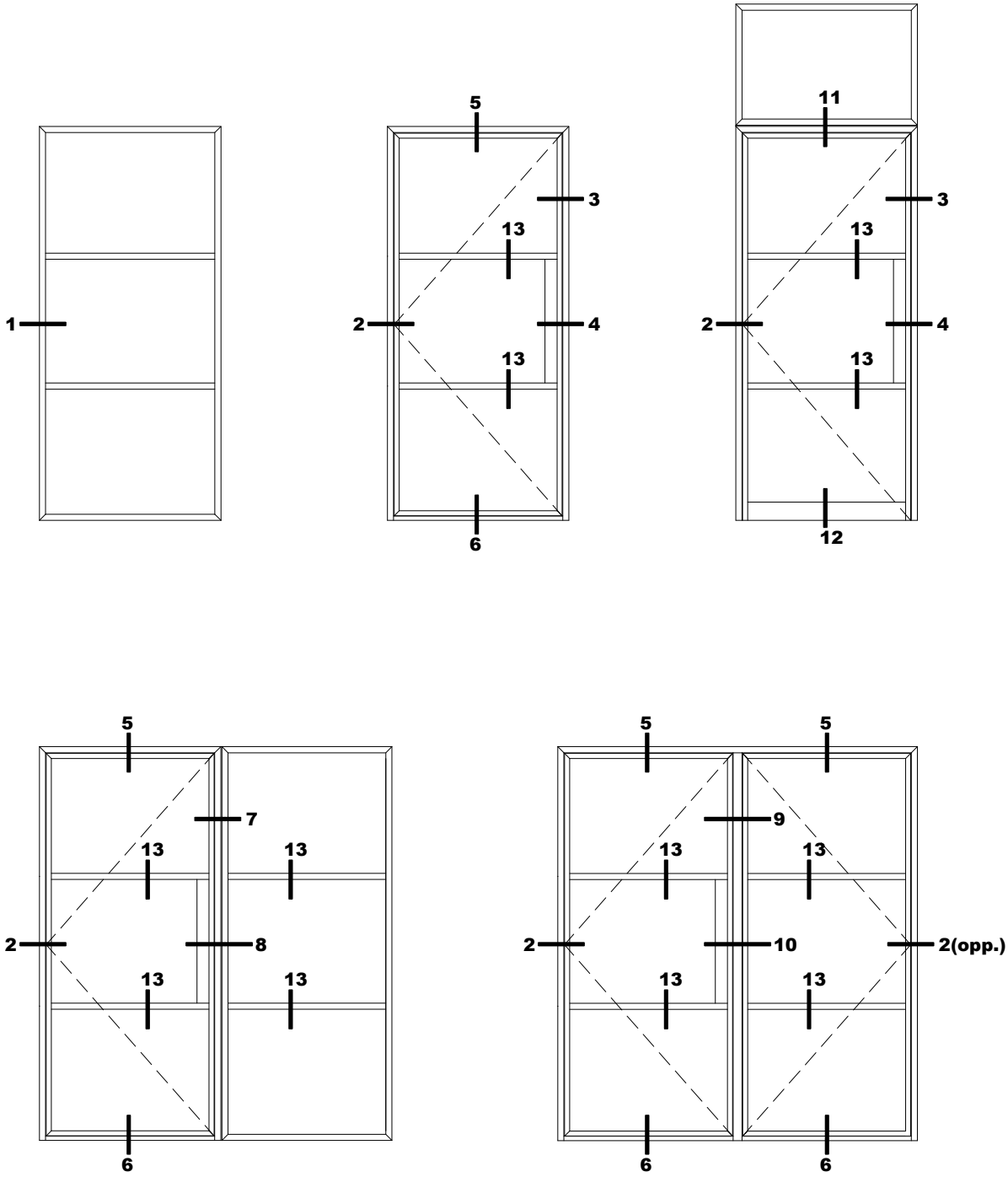

Do Not Scale From This Drawing

Detail 1A

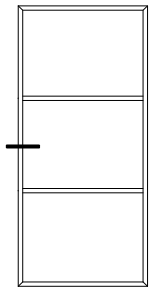

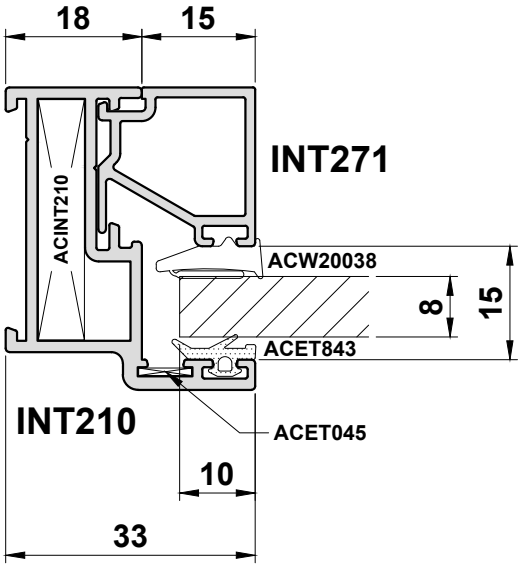

Do Not Scale From This Drawing

Detail 1B

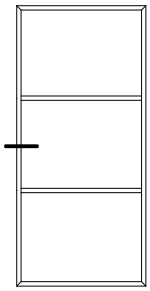

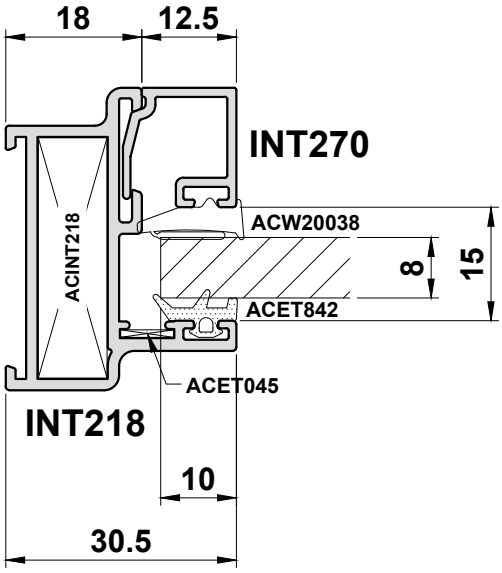

Do Not Scale From This Drawing

Detail 2

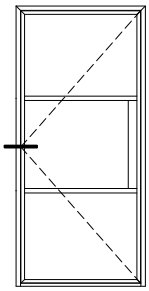

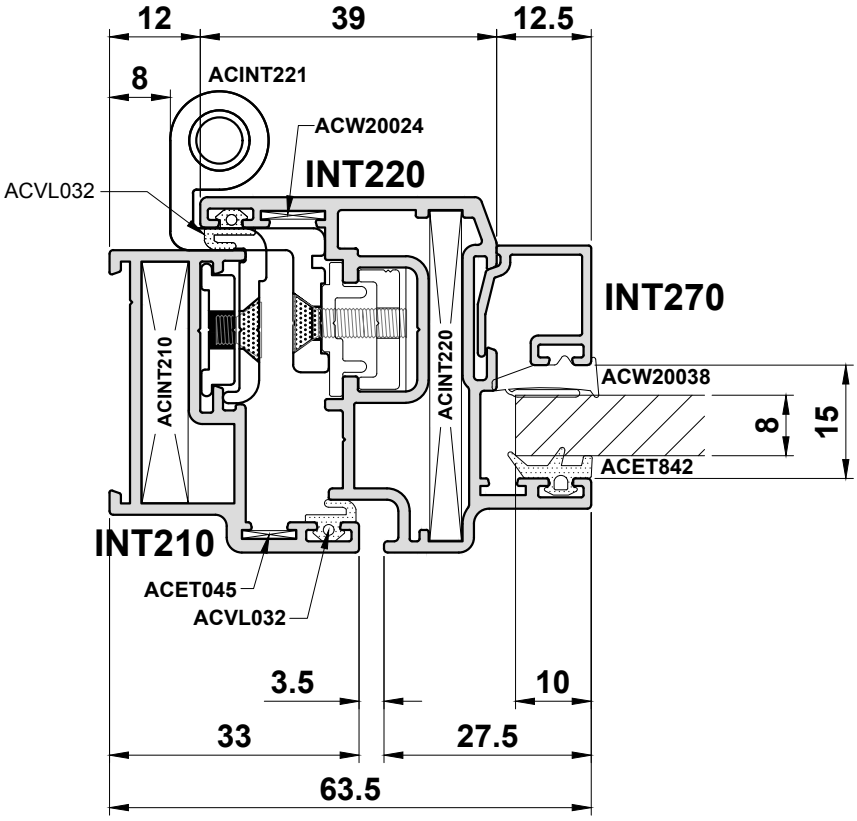

Do Not Scale From This Drawing

Detail 3

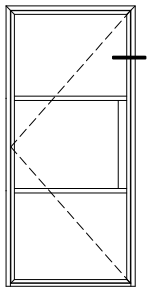

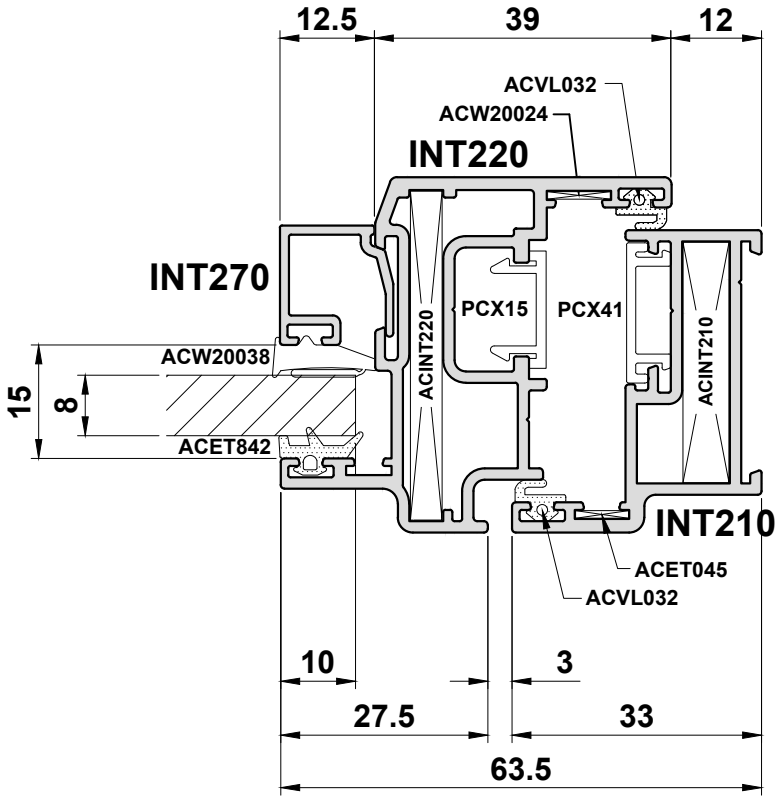

Do Not Scale From This Drawing

Detail 4

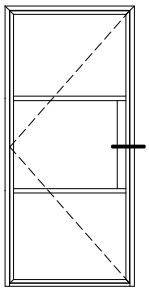

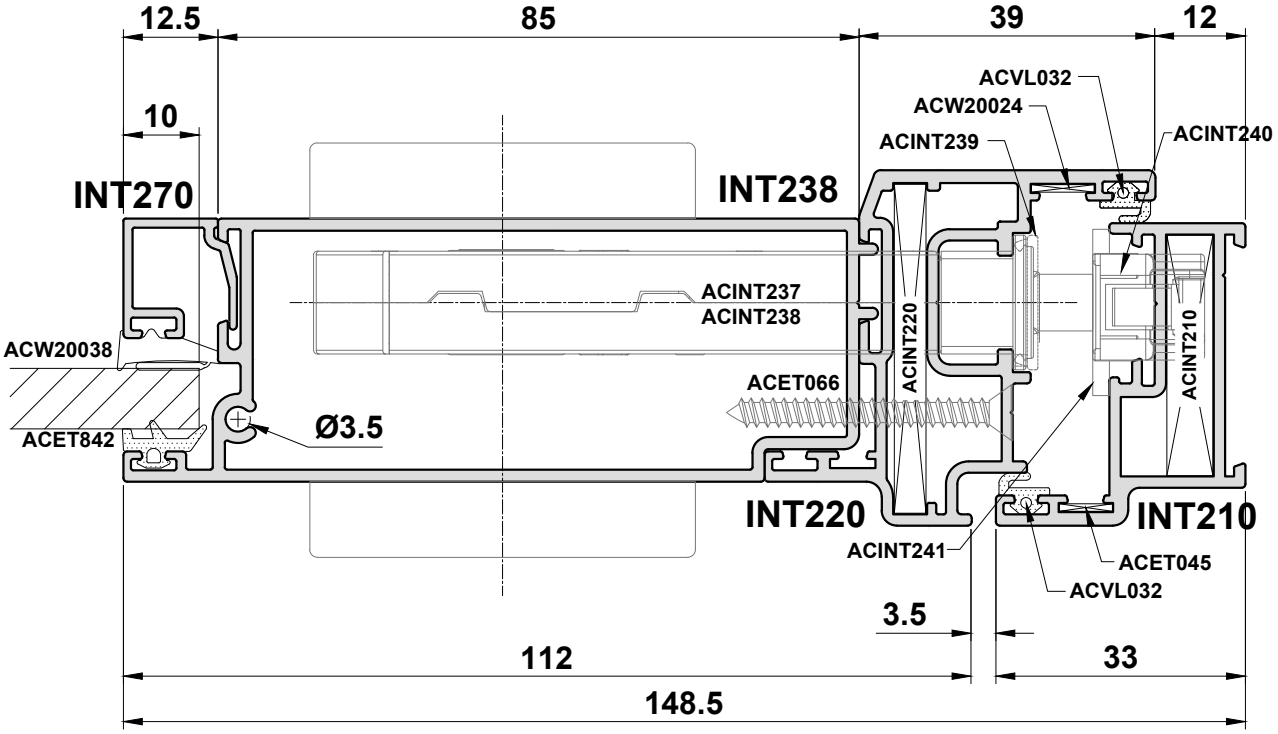

Do Not Scale From This Drawing

Detail 5

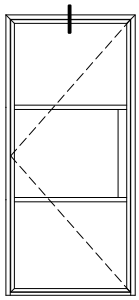

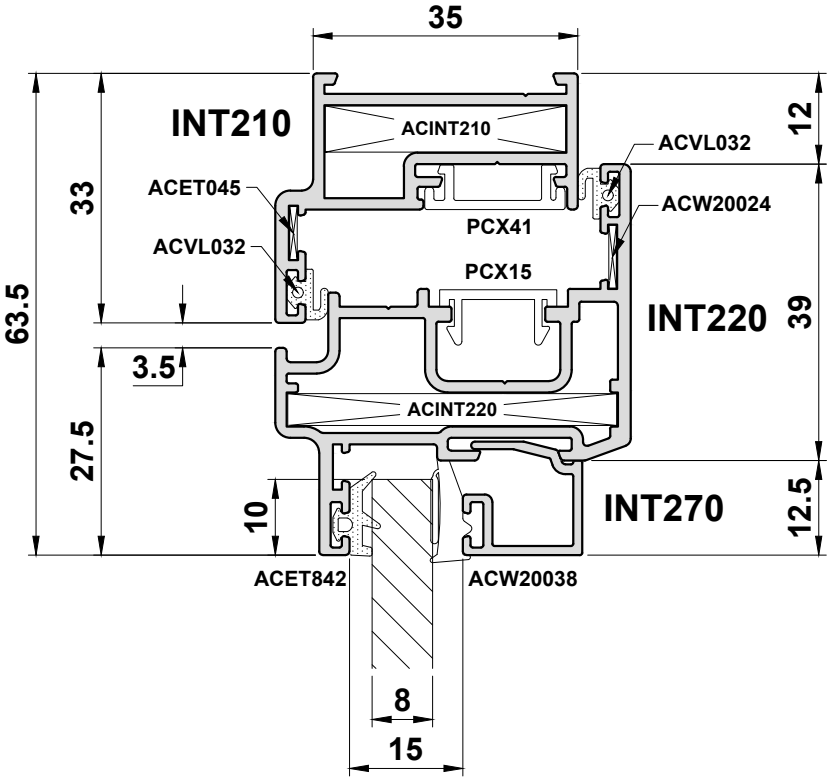

Do Not Scale From This Drawing

Detail 6

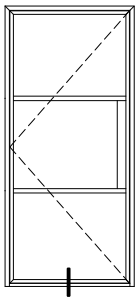

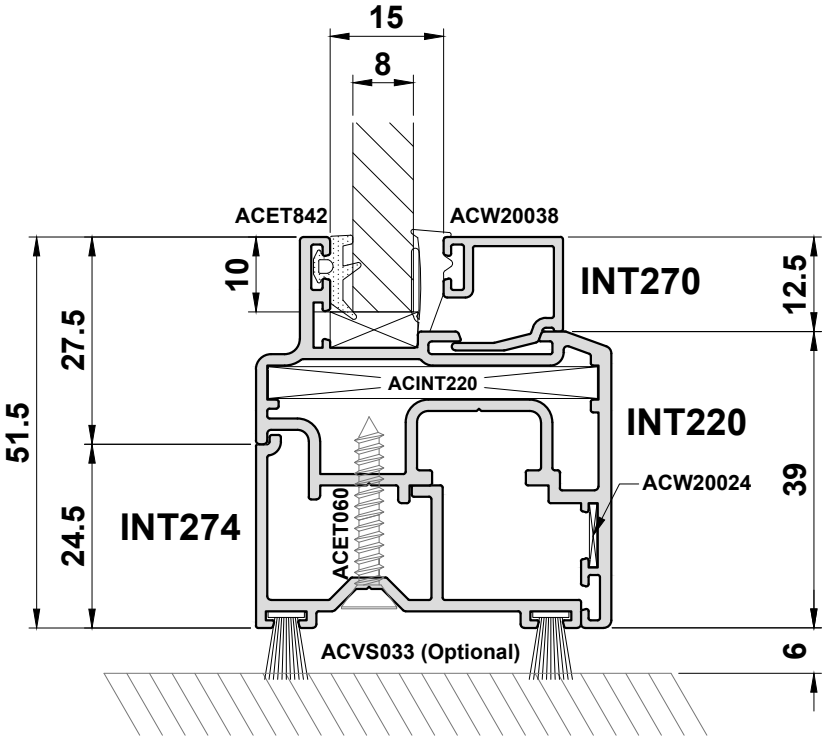

Do Not Scale From This Drawing

Detail 7A

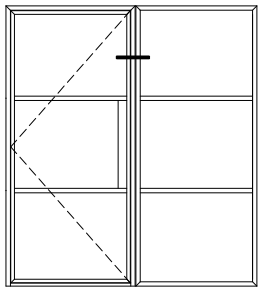

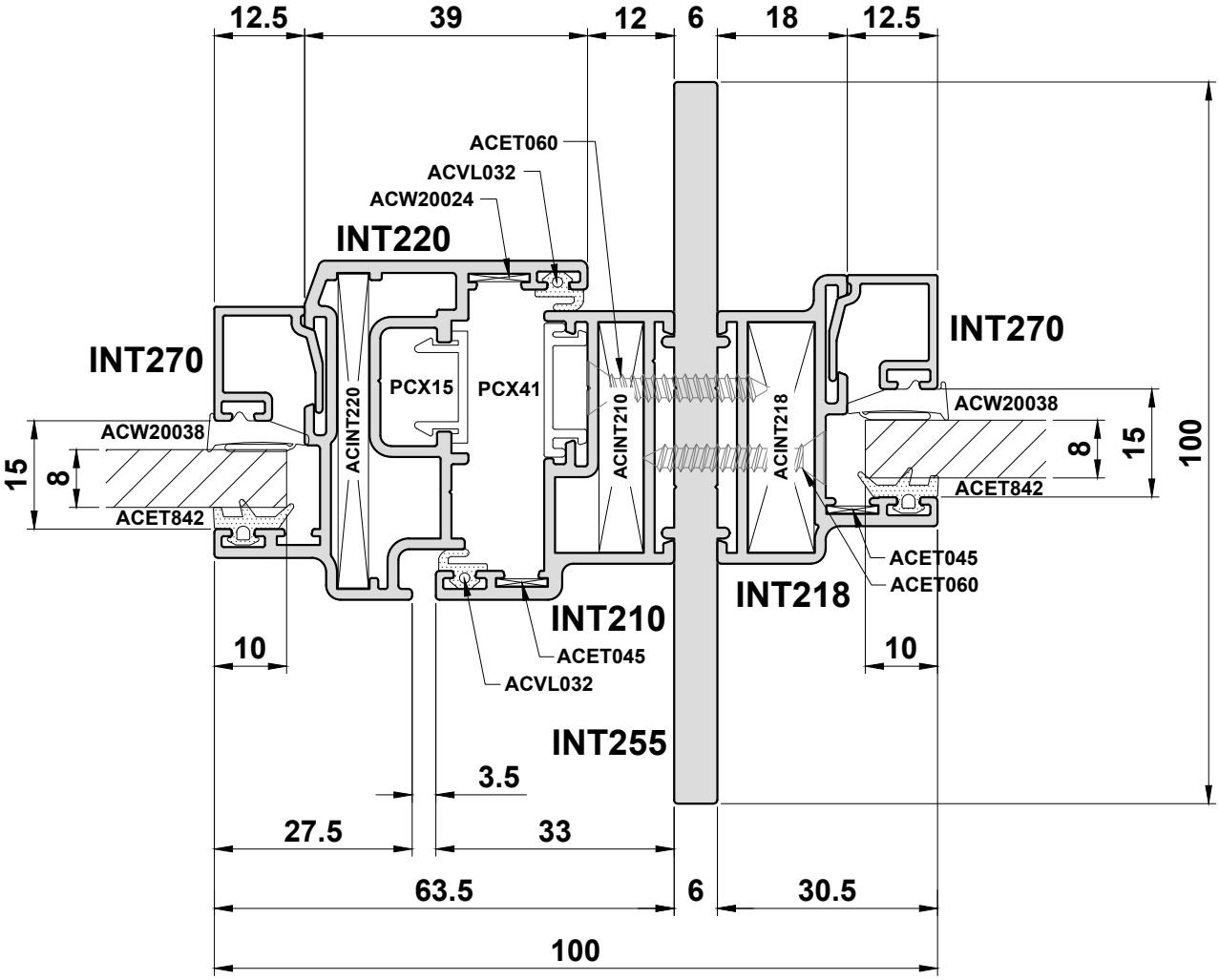

Do Not Scale From This Drawing

Detail 7B

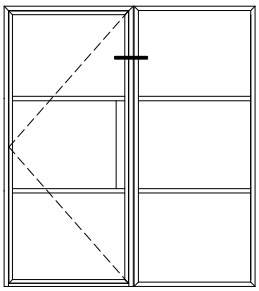

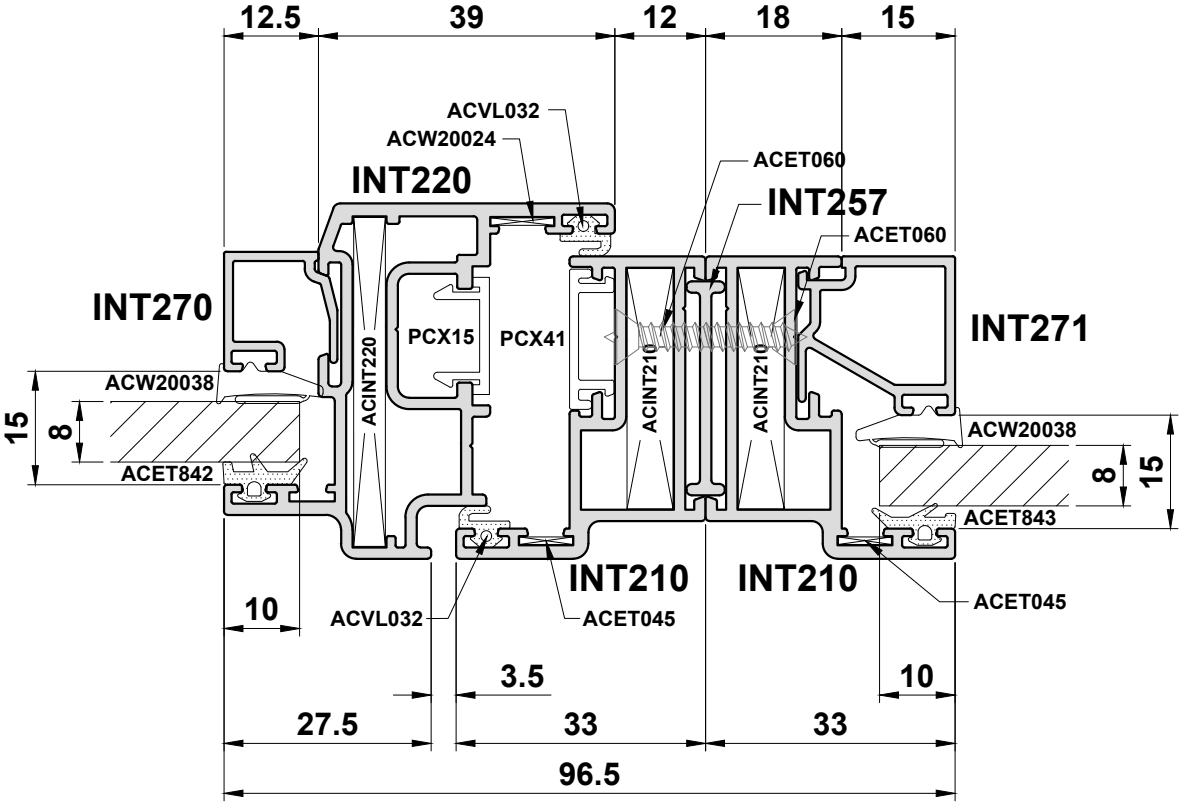

Do Not Scale From This Drawing

ISSUED: DECEMBER 2021

Detail 8

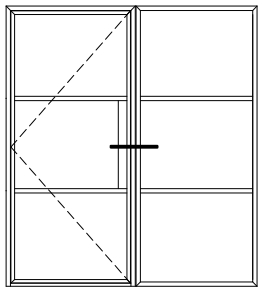

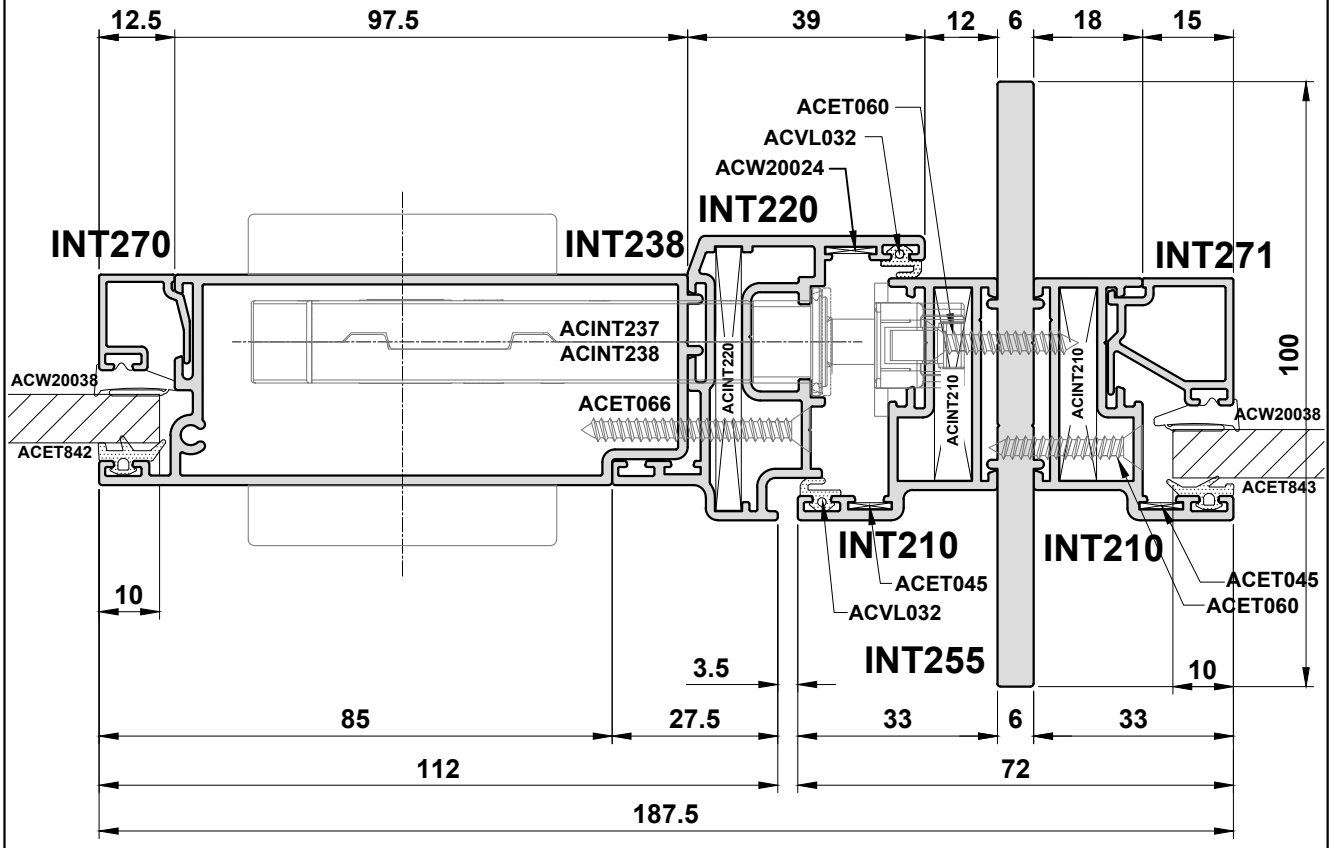

Scale 1:0.8

Do Not Scale From This Drawing

Detail 9

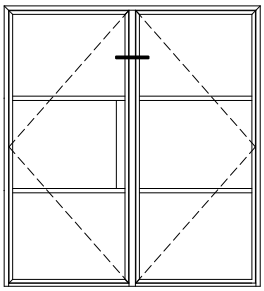

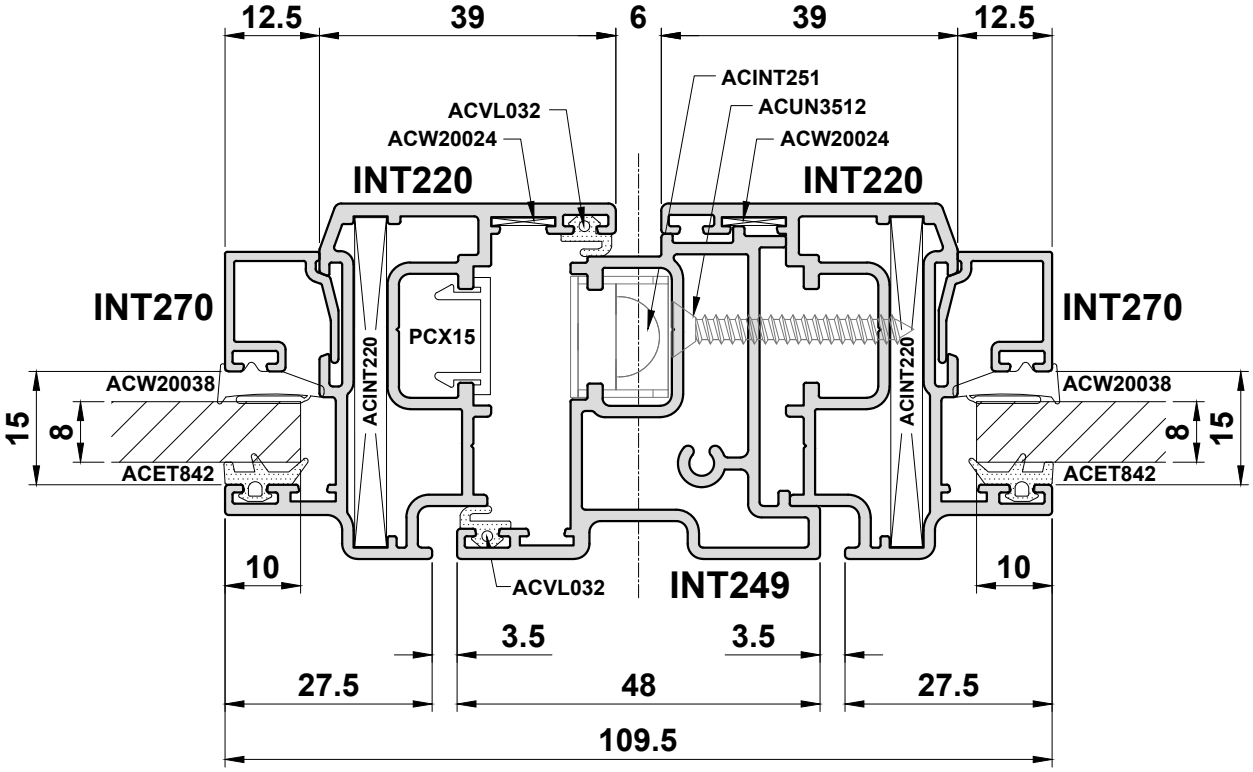

Do Not Scale From This Drawing

Detail 10

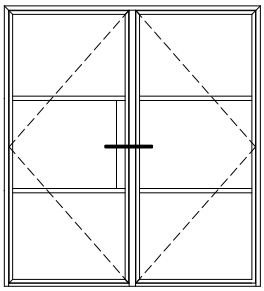

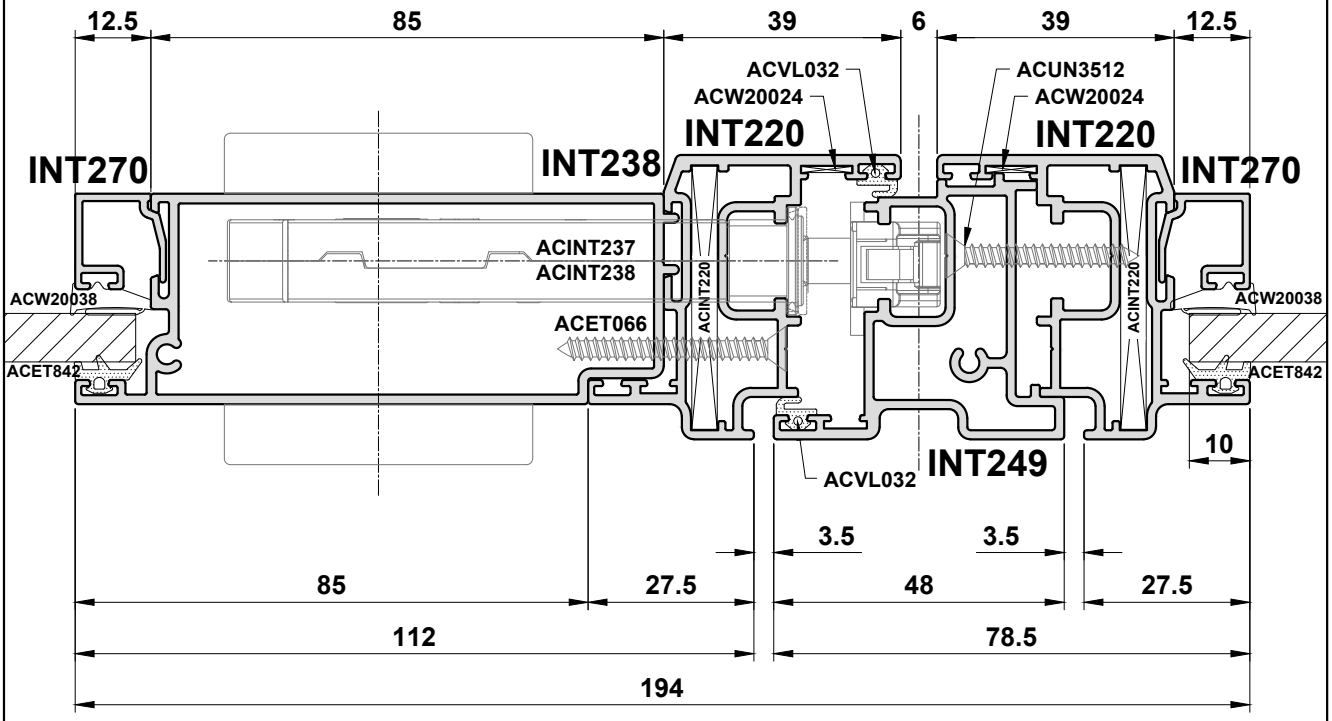

Scale 1:0.8

Do Not Scale From This Drawing

Detail 11

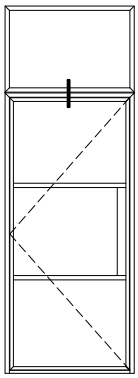

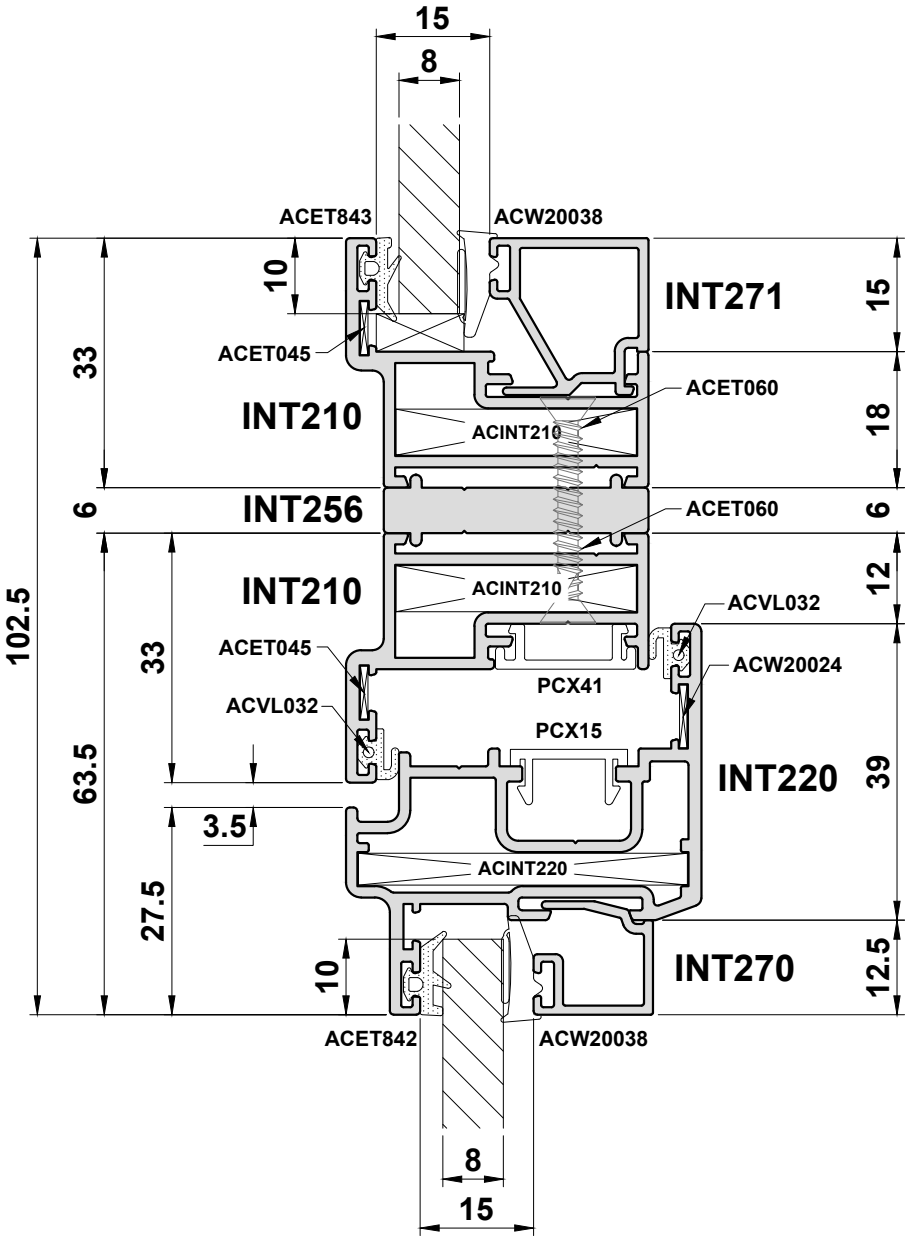

Do Not Scale From This Drawing

Detail 12

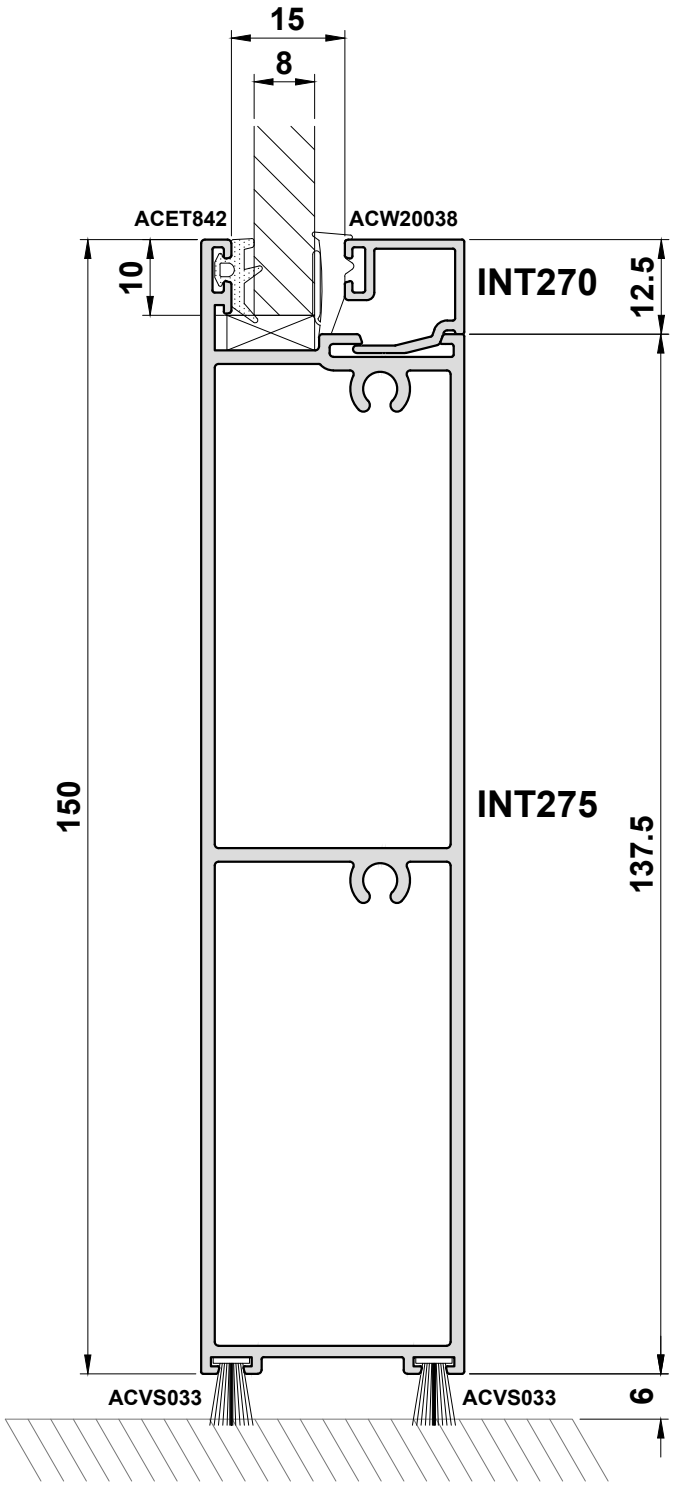

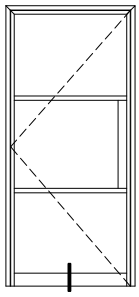

Do Not Scale From This Drawing

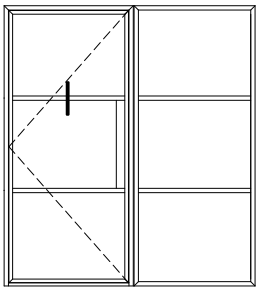

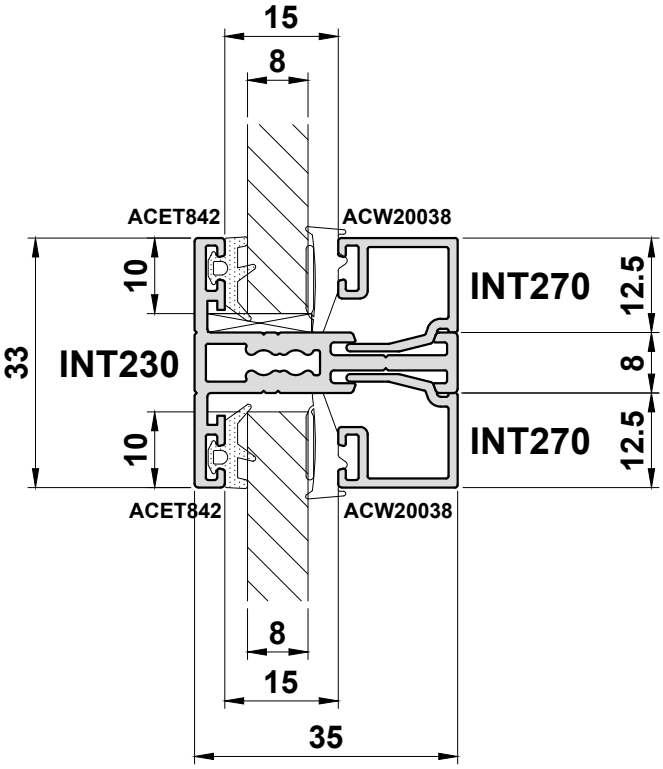

Do Not Scale From This Drawing

Detail 13B

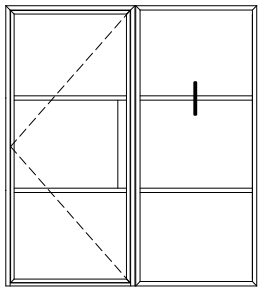

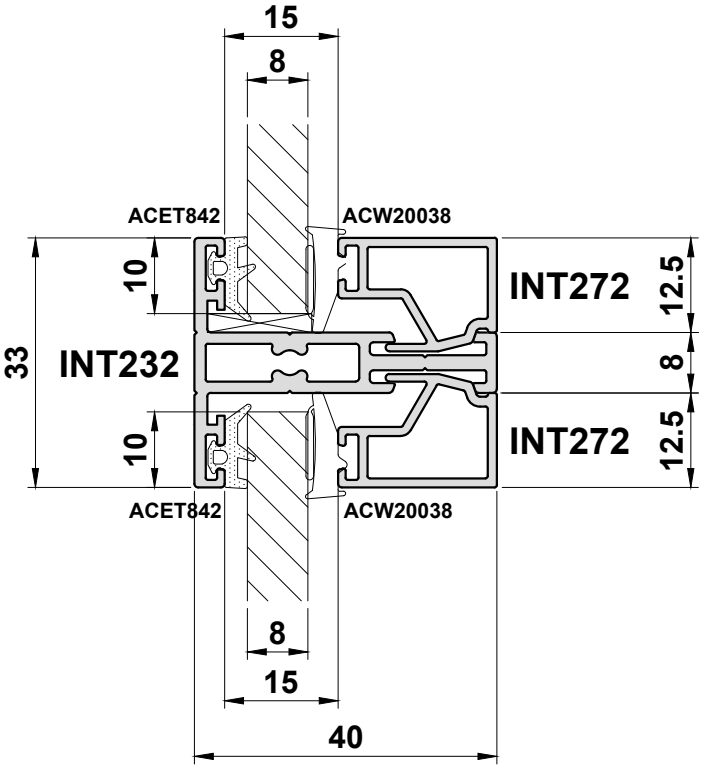

Do Not Scale From This Drawing

Sliding Door

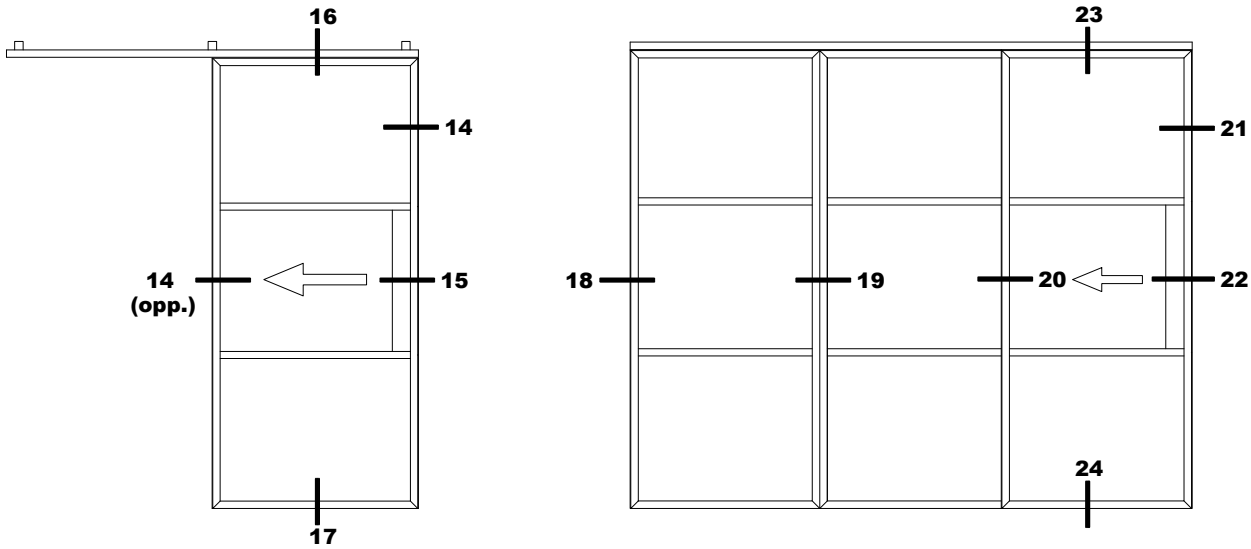

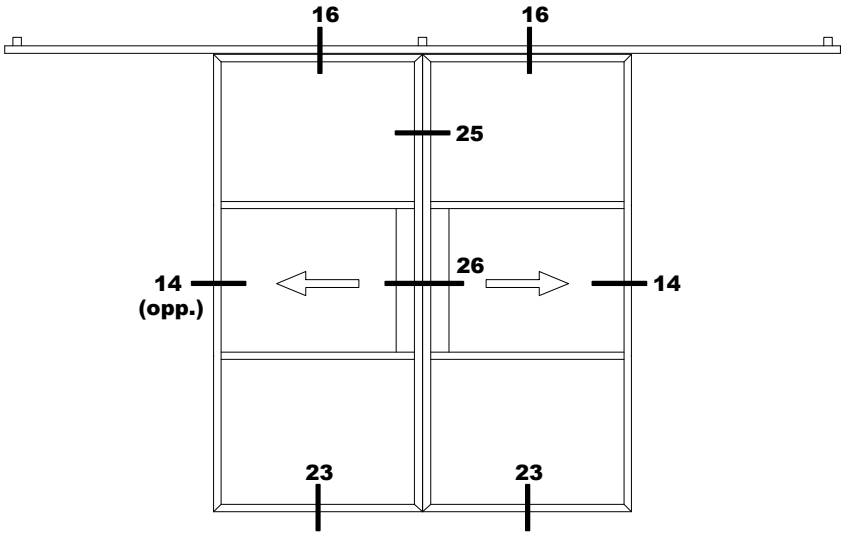

Do Not Scale From This Drawing

ISSUED: DECEMBER 2021

Detail 14

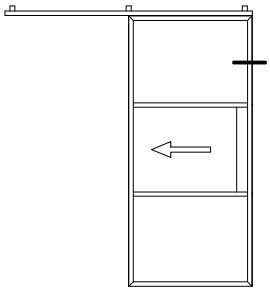

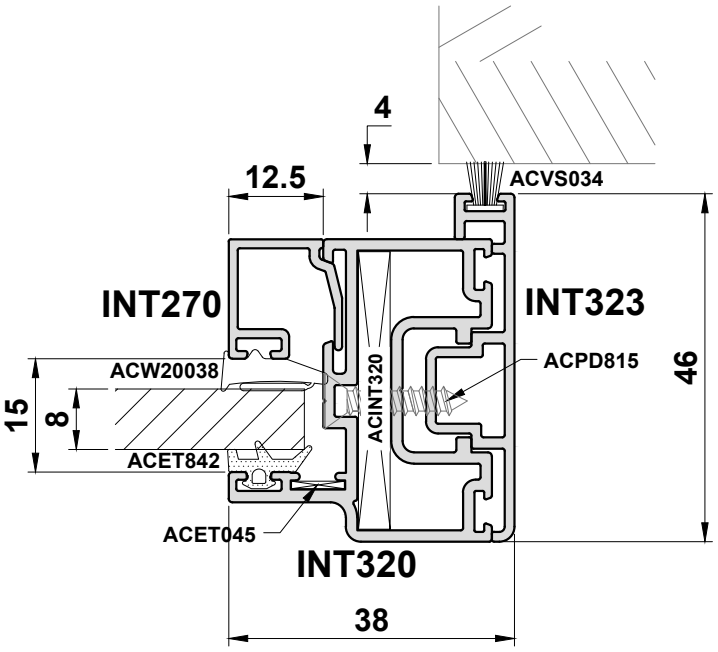

Do Not Scale From This Drawing

Detail 15

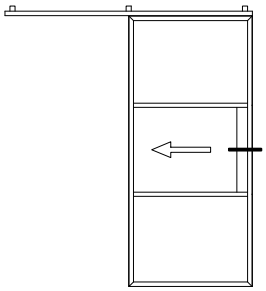

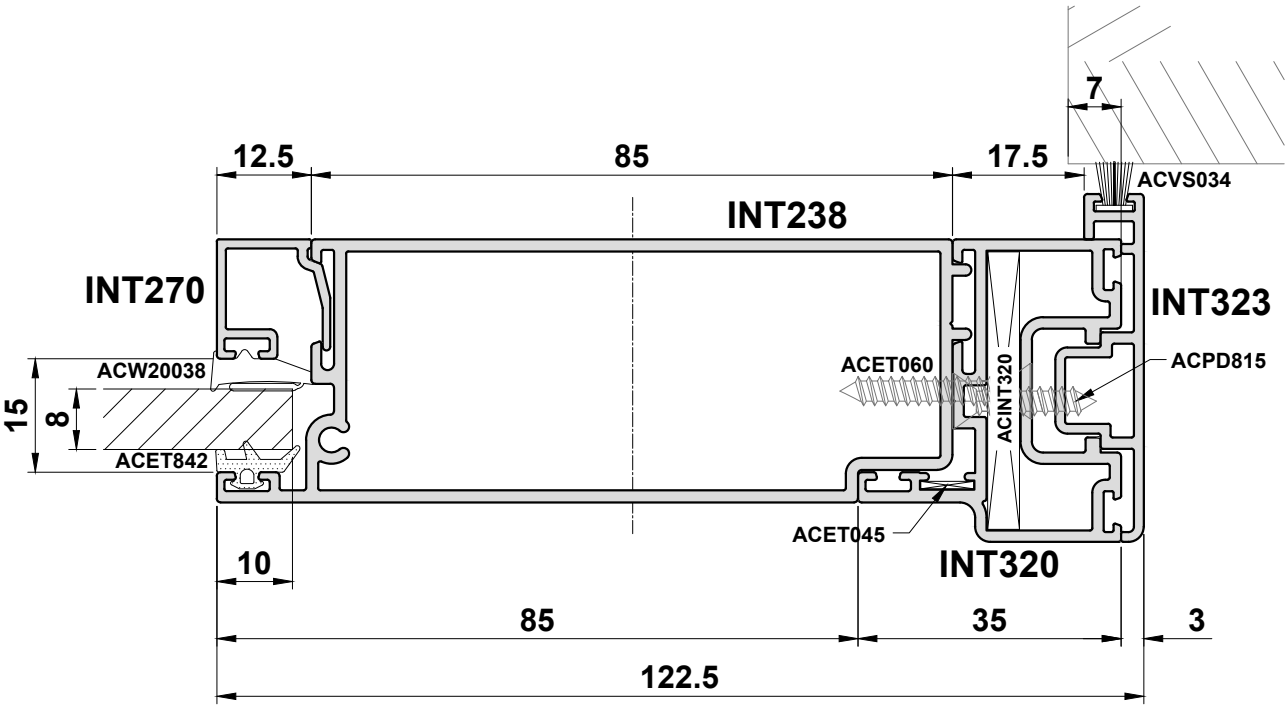

Do Not Scale From This Drawing

Detail 16

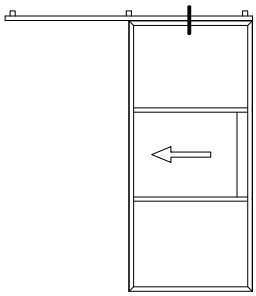

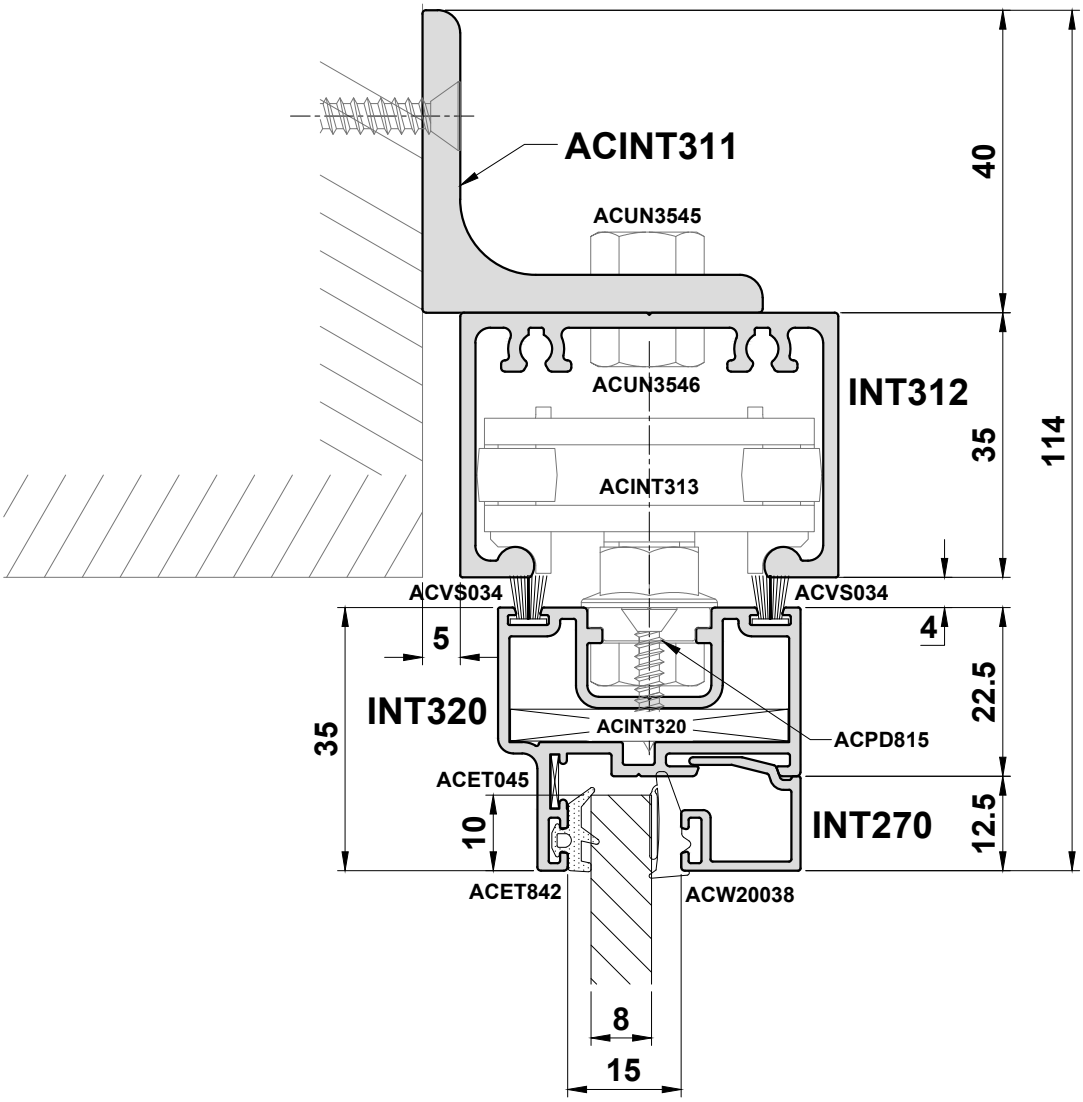

Do Not Scale From This Drawing

Detail 17

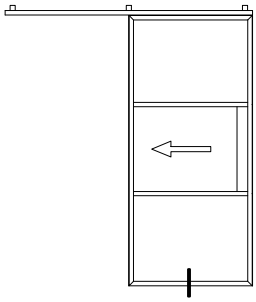

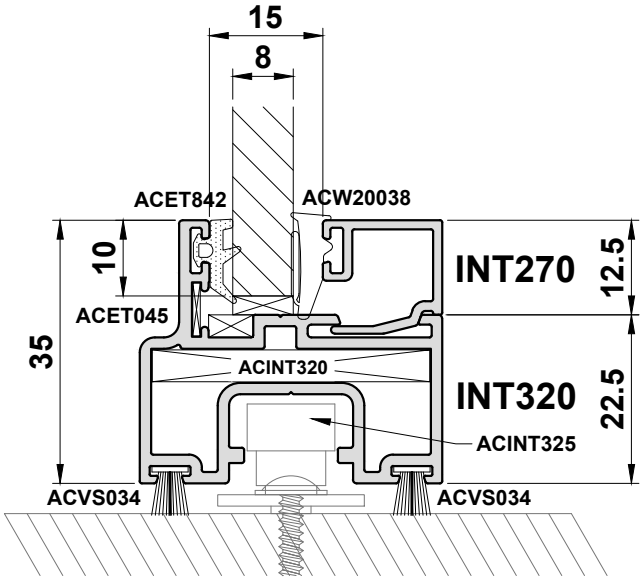

Do Not Scale From This Drawing

Detail 18

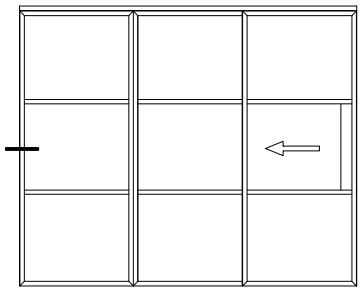

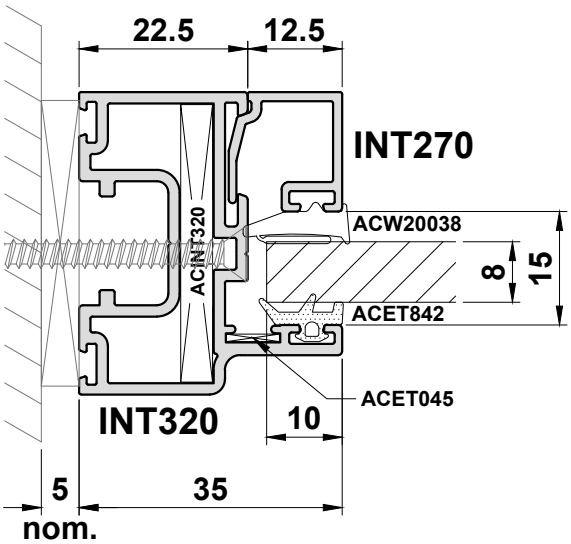

Do Not Scale From This Drawing

Detail 19

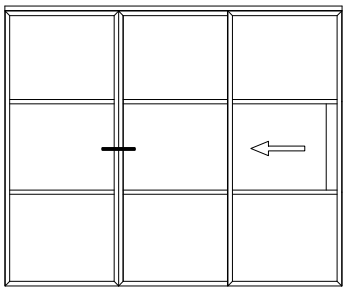

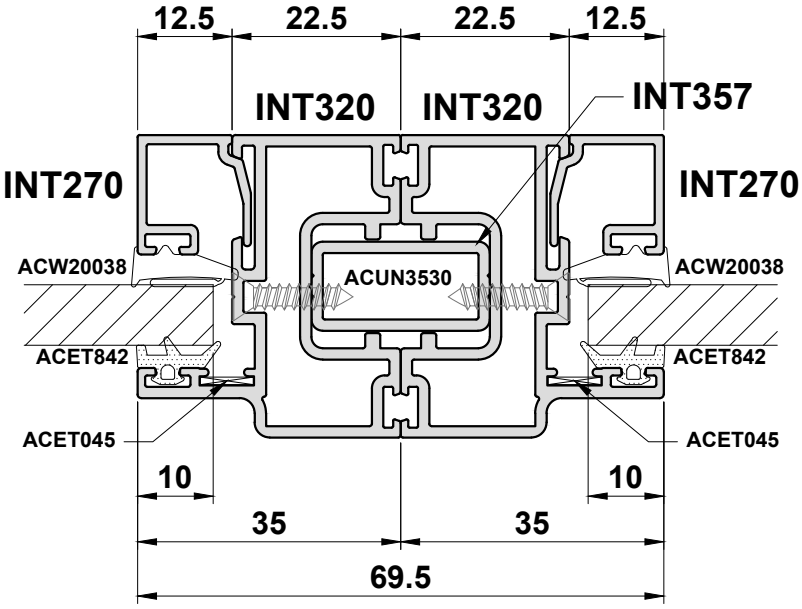

Do Not Scale From This Drawing

Detail 20

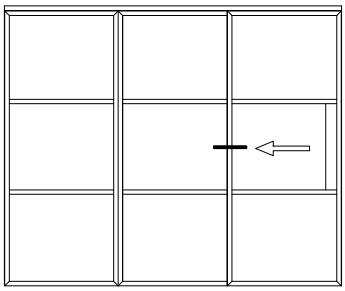

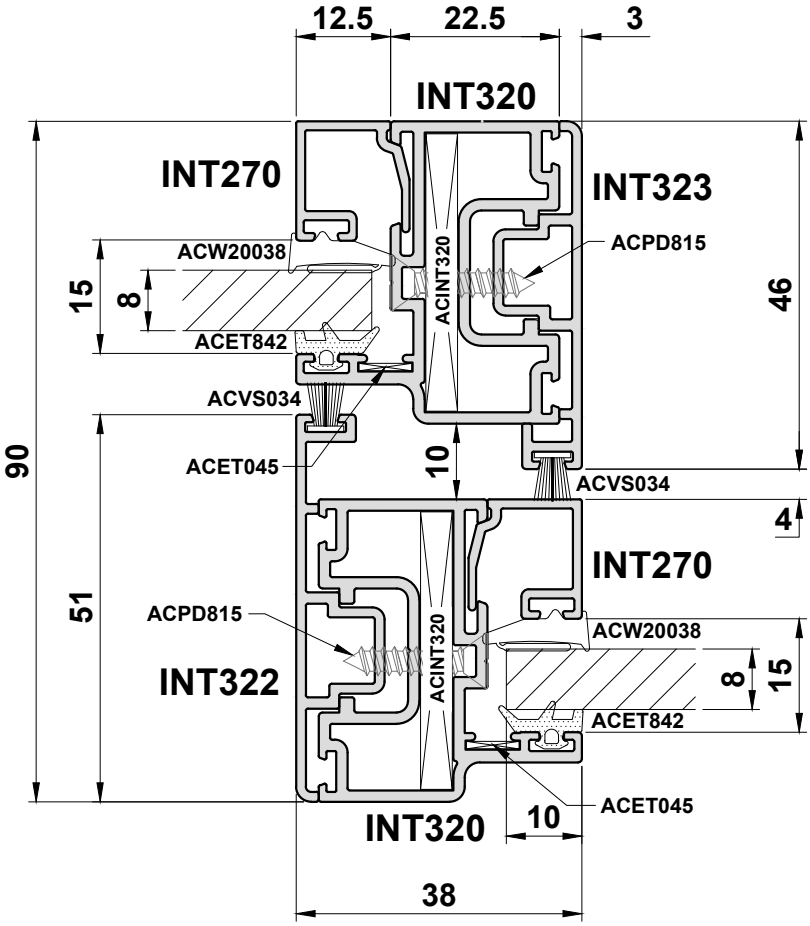

Do Not Scale From This Drawing

Detail 21

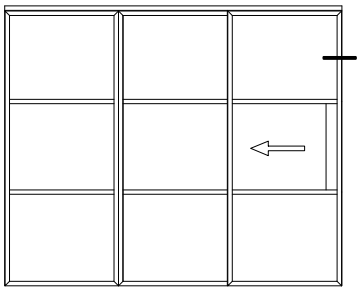

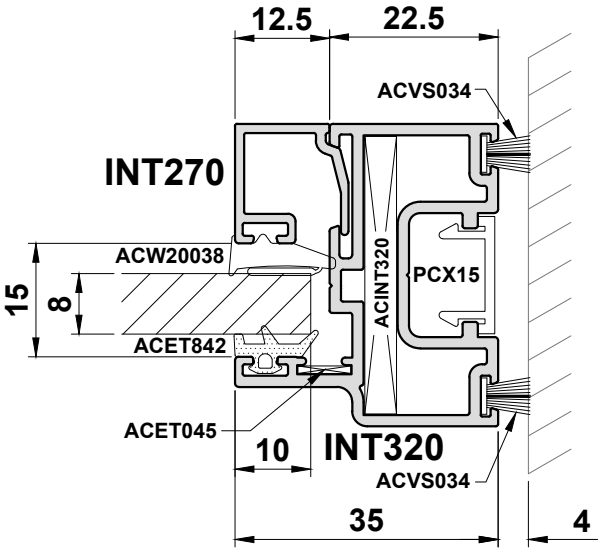

Do Not Scale From This Drawing

Detail 22

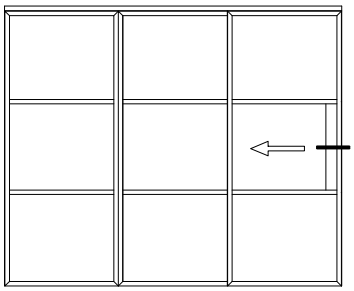

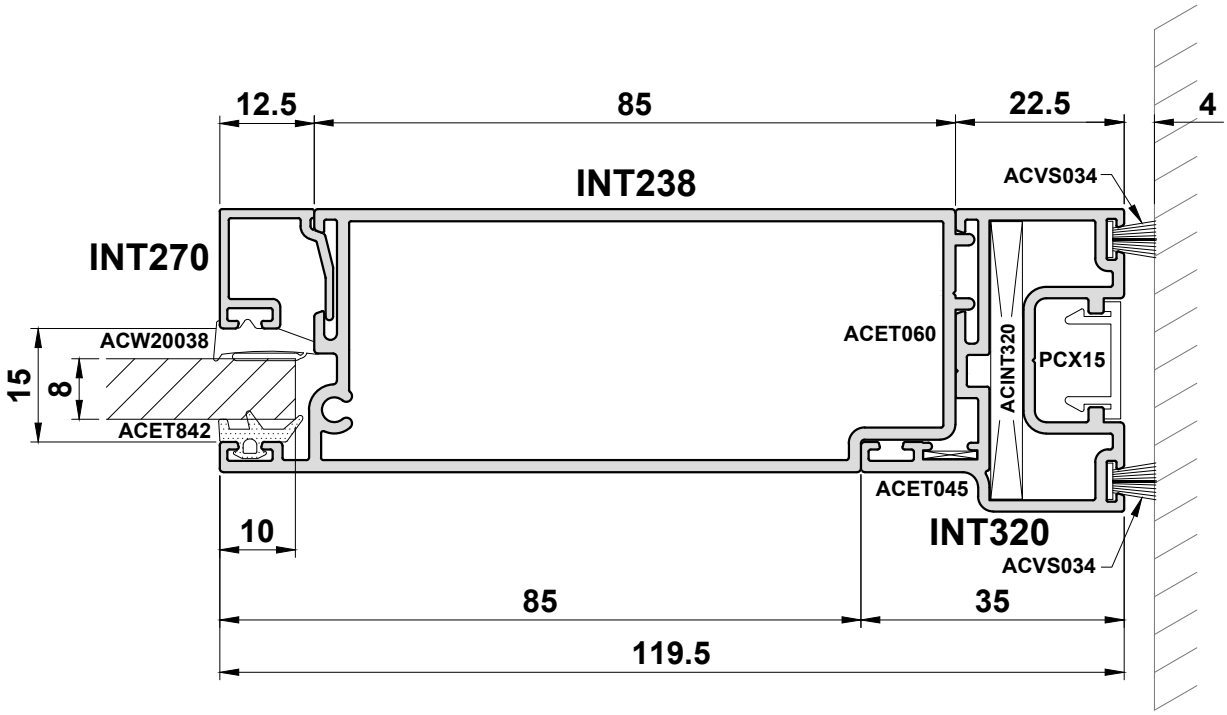

Do Not Scale From This Drawing

Detail 23

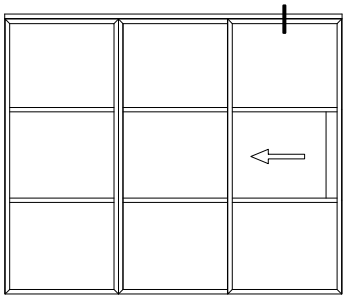

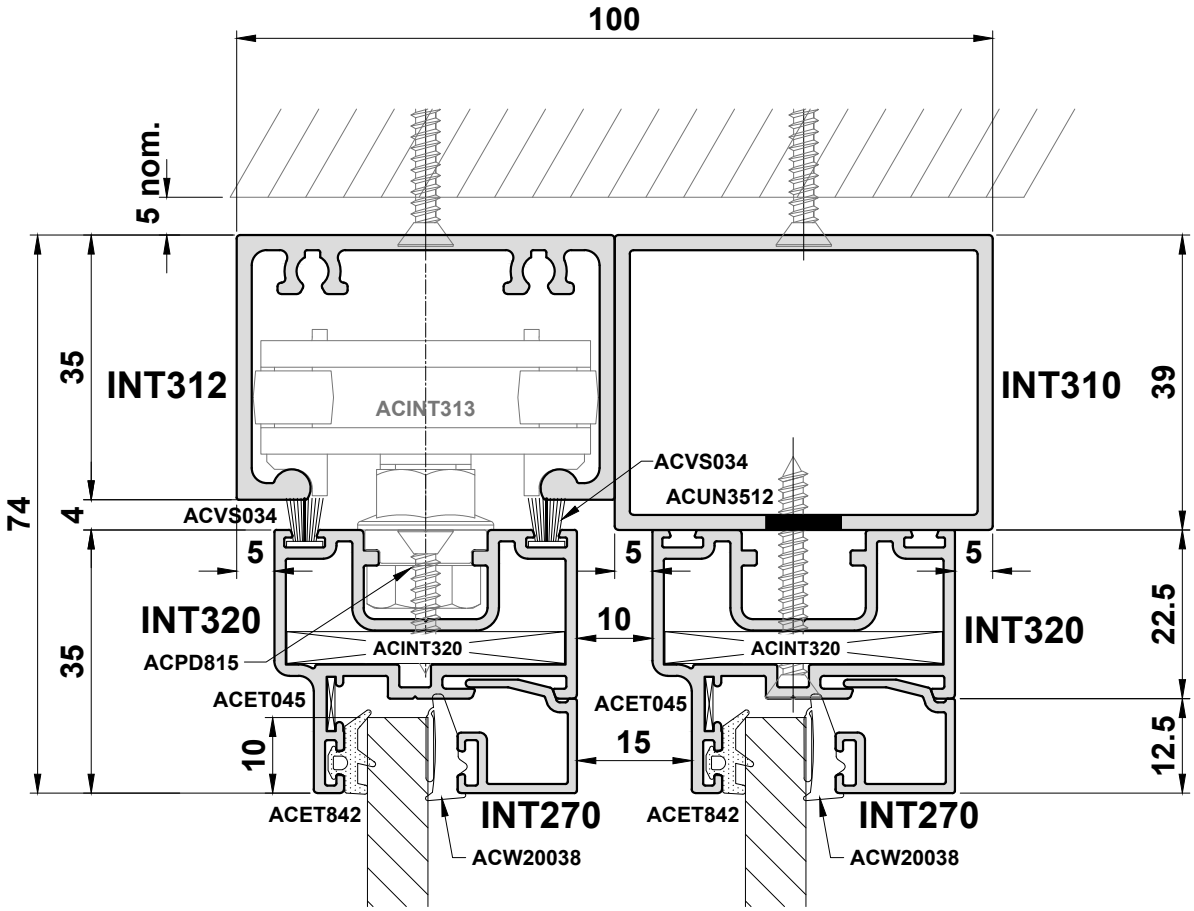

Do Not Scale From This Drawing

Detail 24

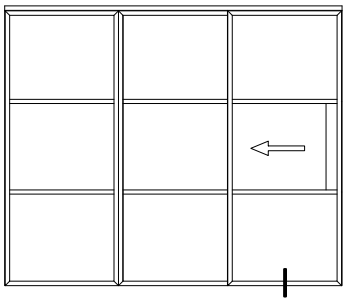

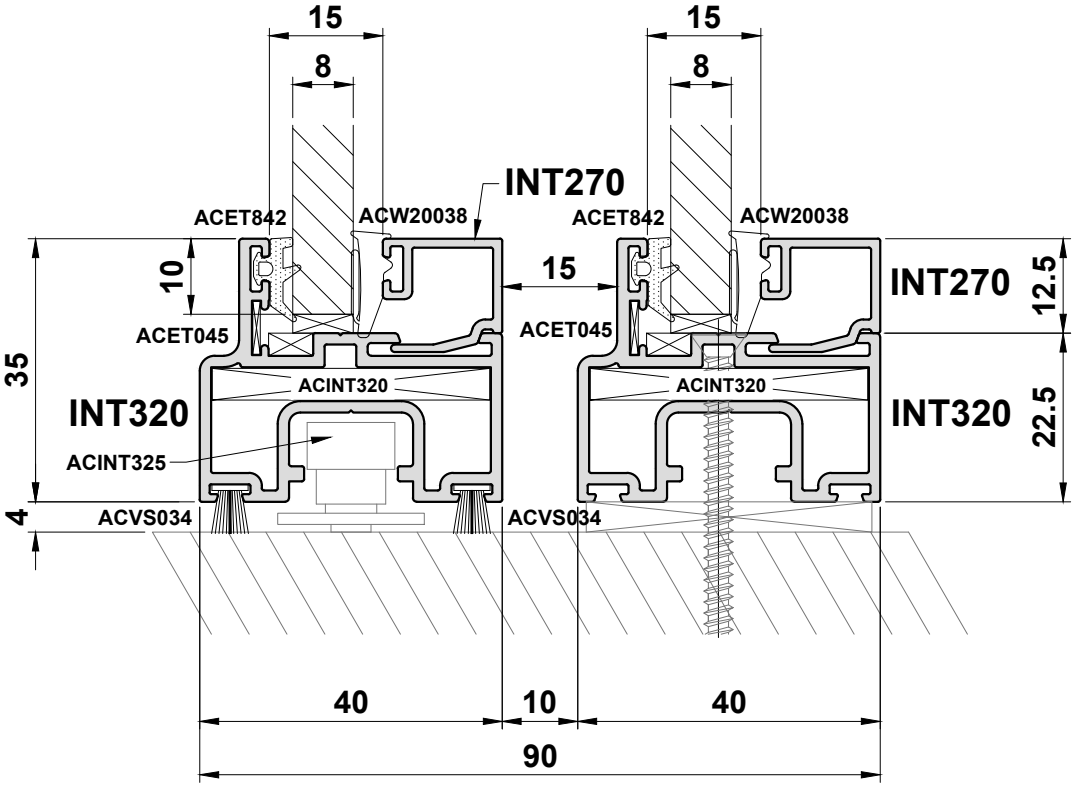

Do Not Scale From This Drawing

Detail 25

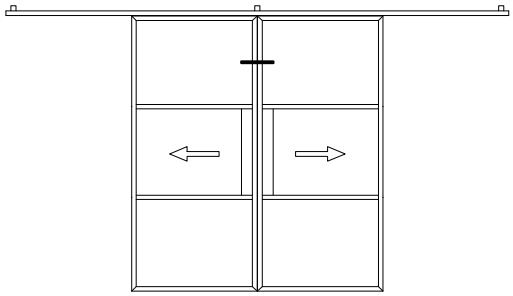

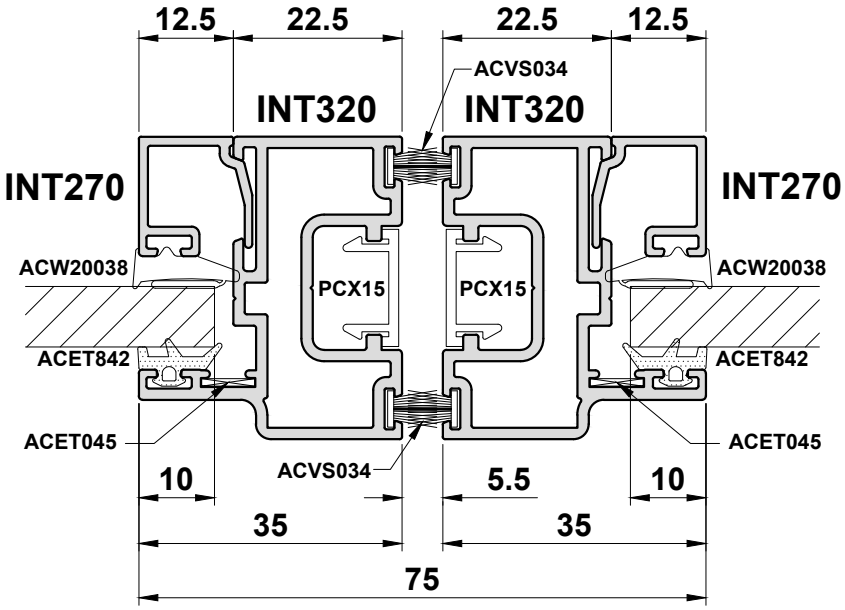

Do Not Scale From This Drawing

Detail 26

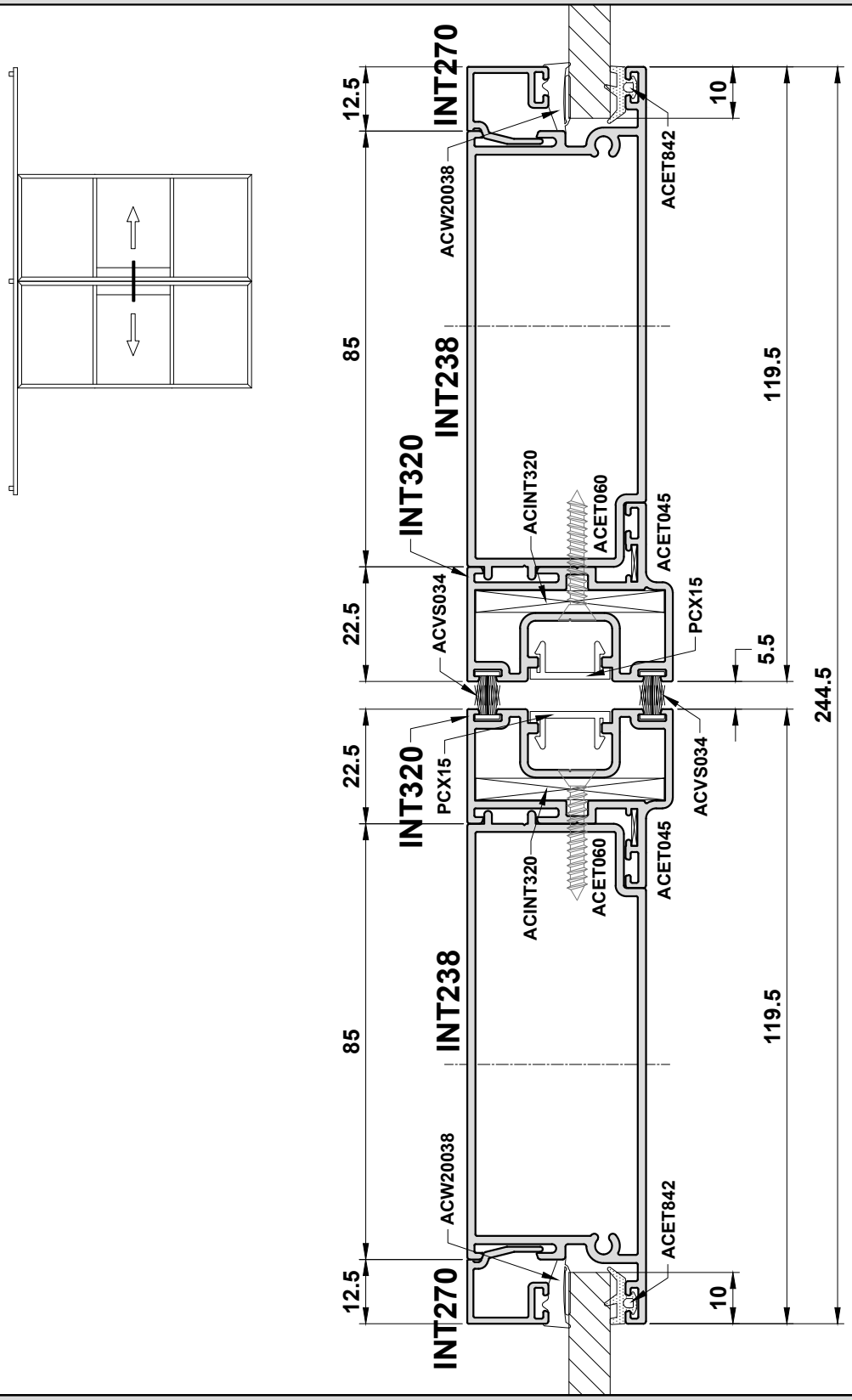

Scale 1:0.8

Do Not Scale From This Drawing

Pivot Door

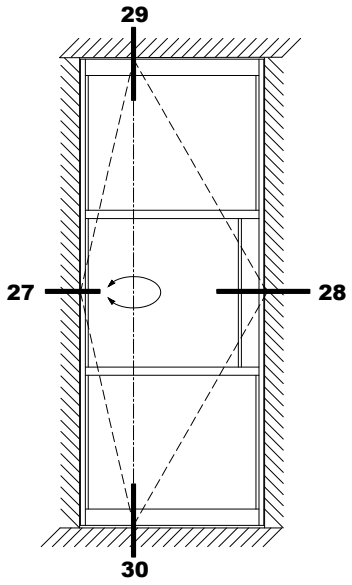

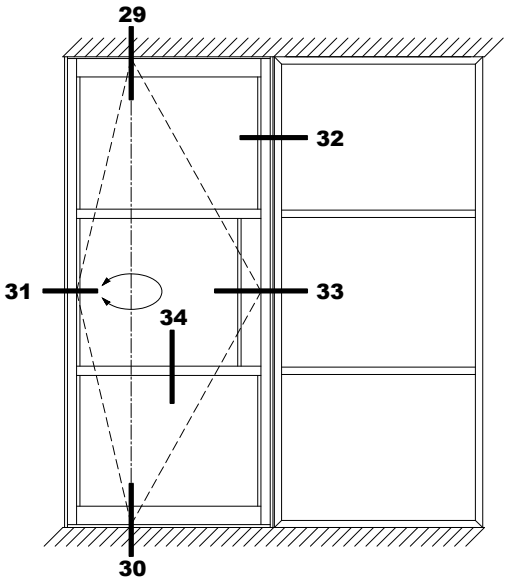

Do Not Scale From This Drawing

Detail 27

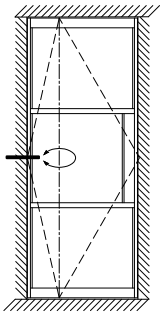

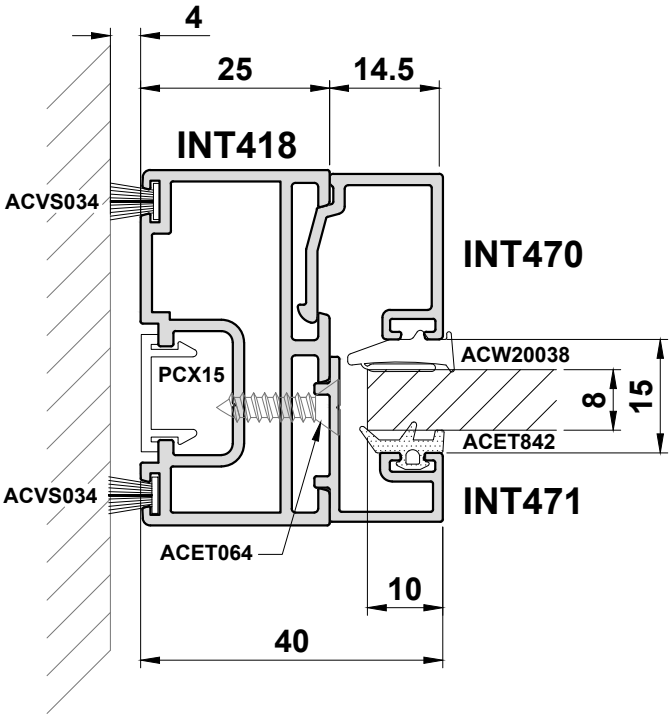

Do Not Scale From This Drawing

Detail 28

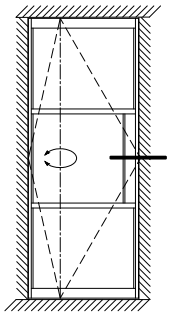

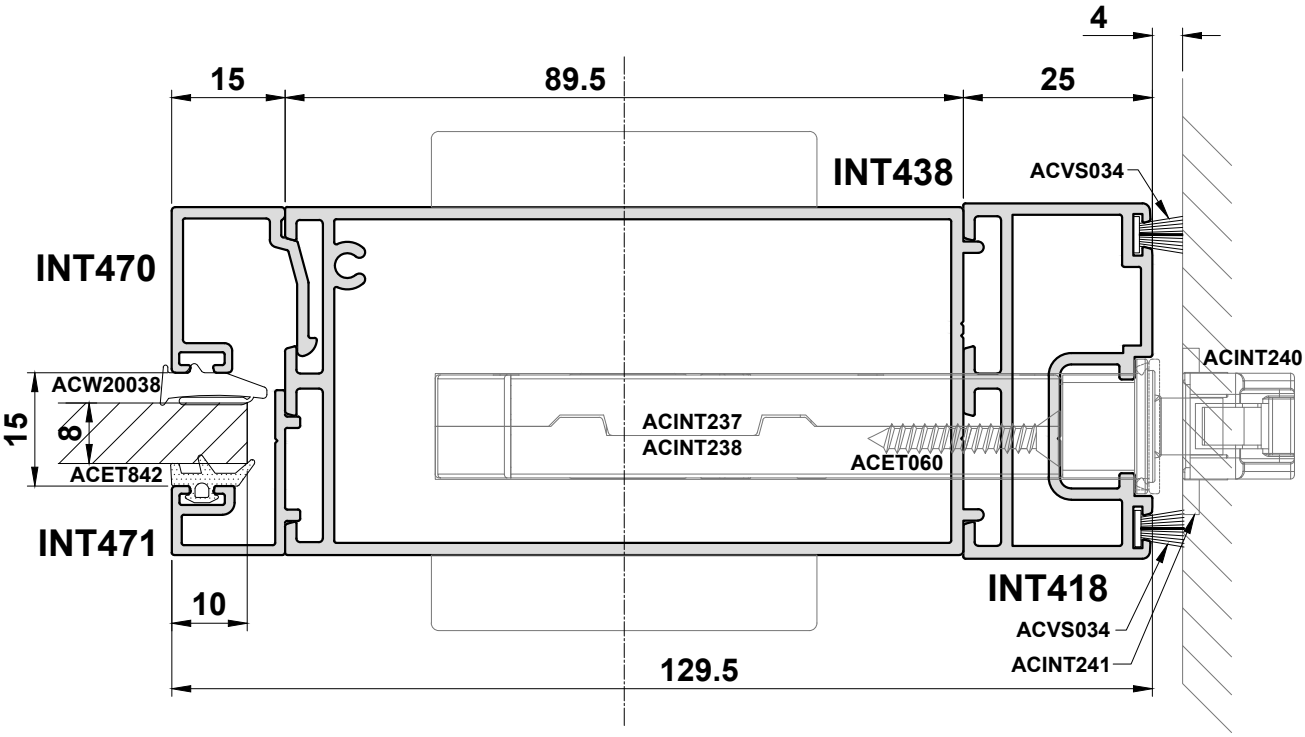

Do Not Scale From This Drawing

Detail 29

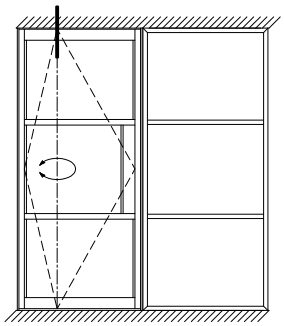

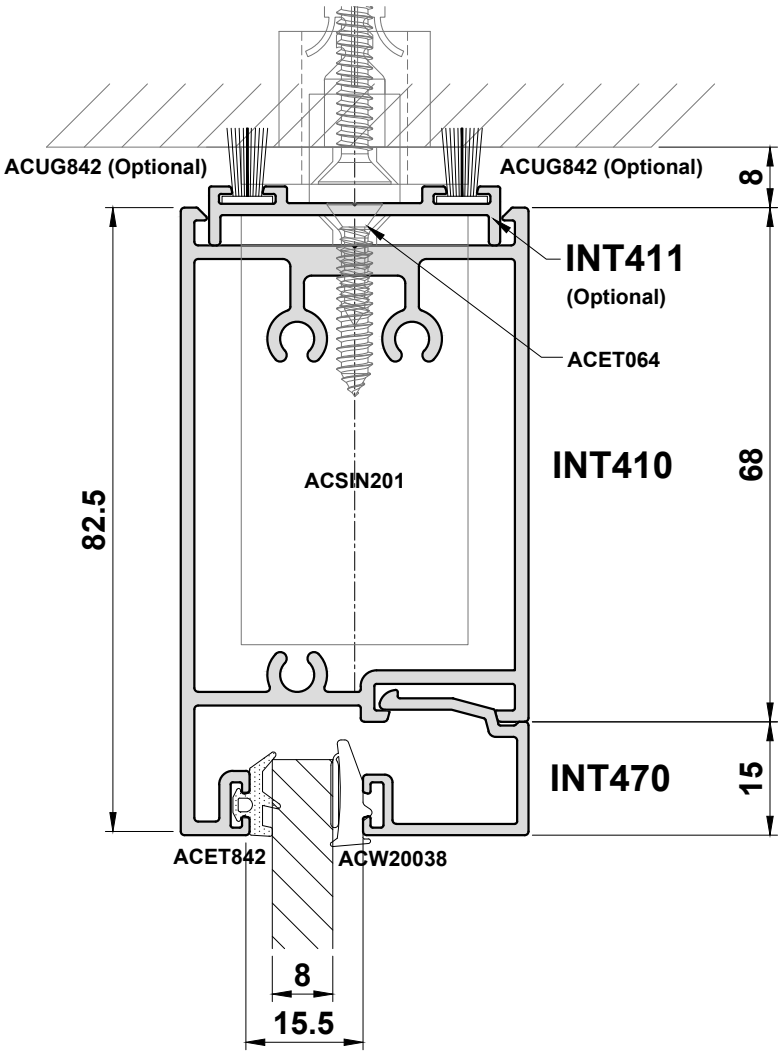

Do Not Scale From This Drawing

Detail 30

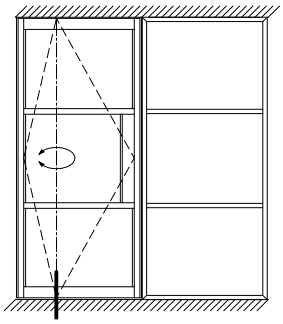

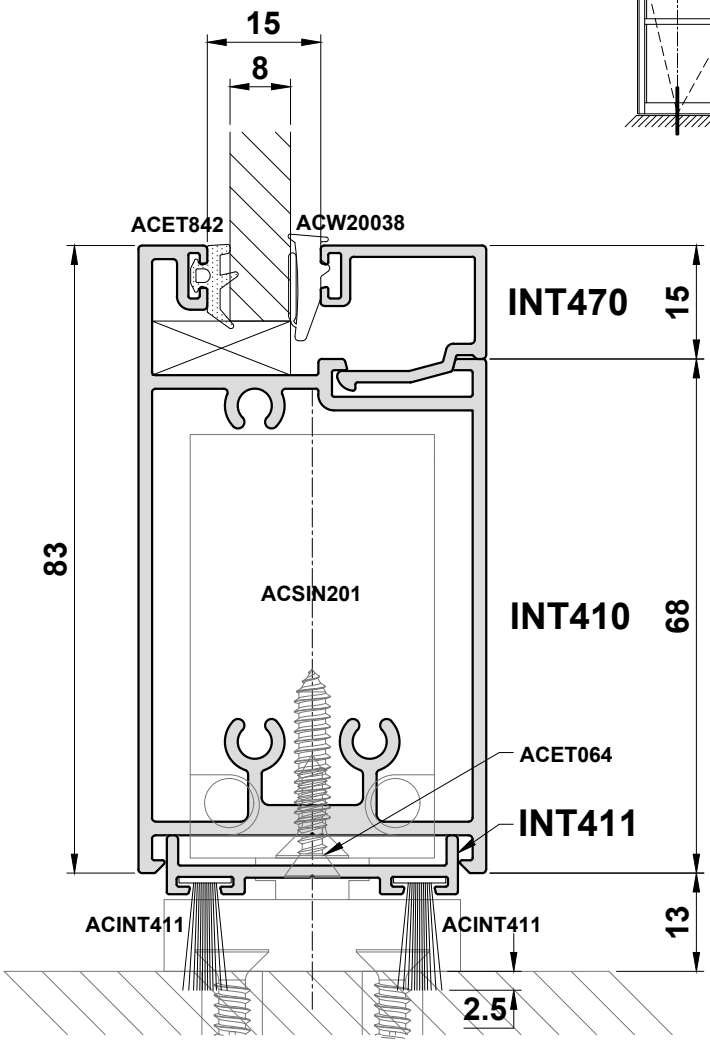

Do Not Scale From This Drawing

Detail 31

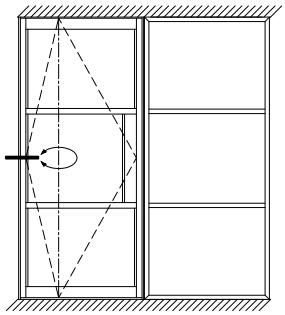

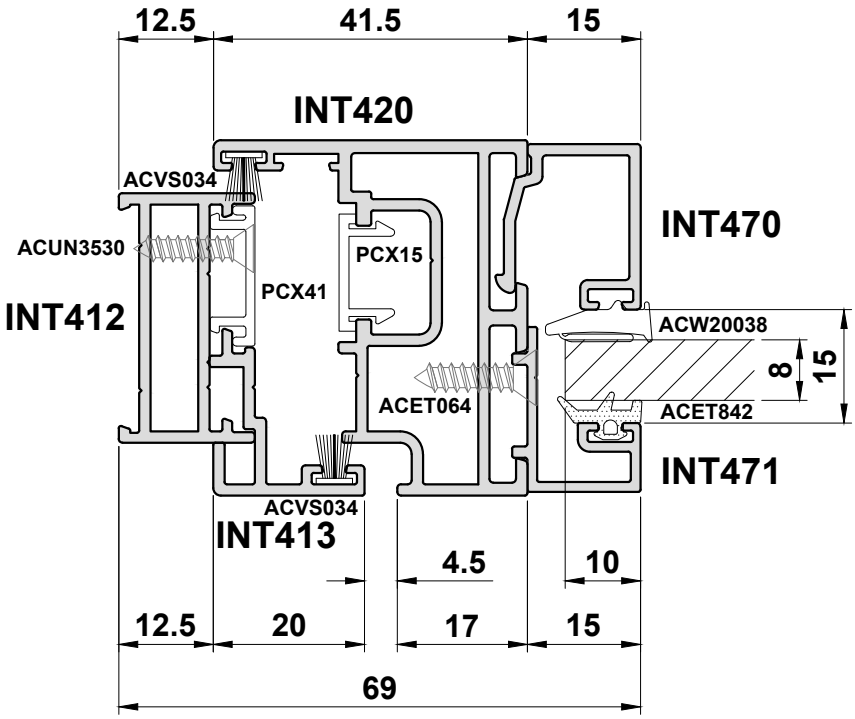

Do Not Scale From This Drawing

Detail 32

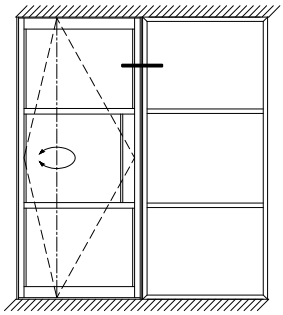

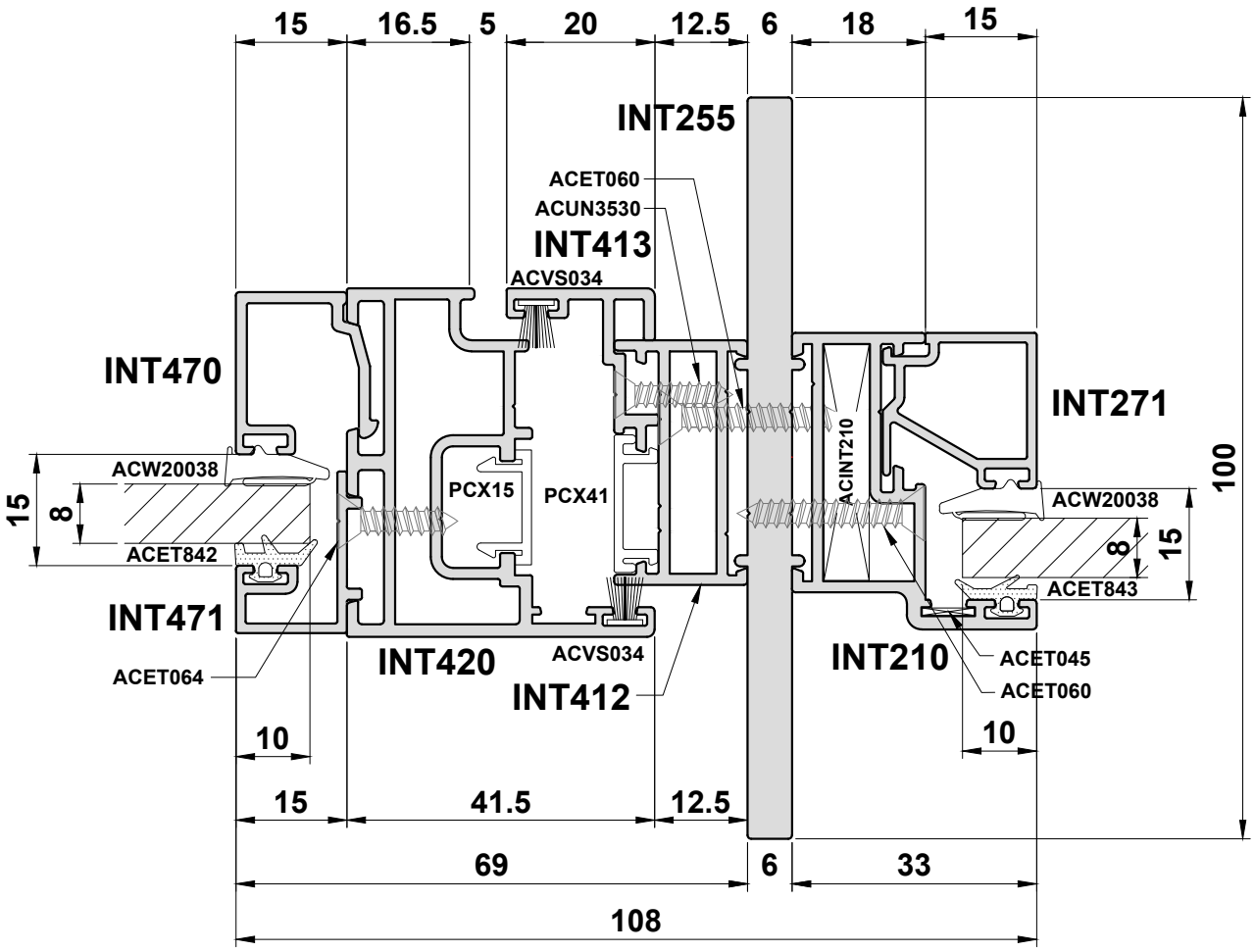

Do Not Scale From This Drawing

Detail 33

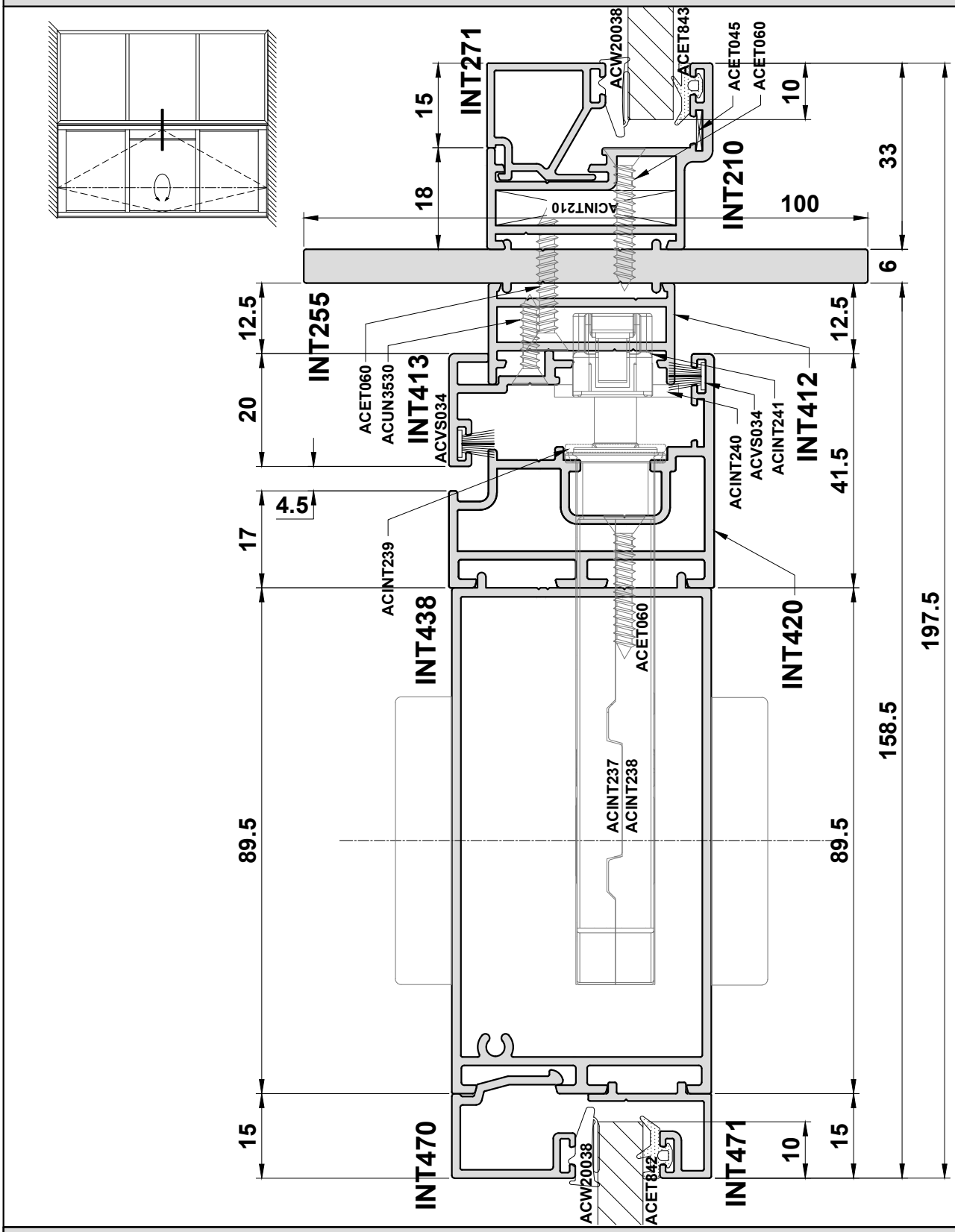

Do Not Scale From This Drawing

Detail 34

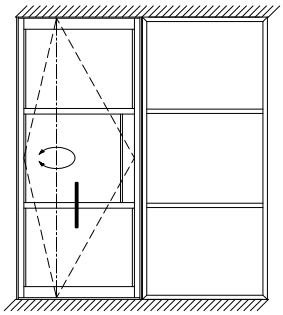

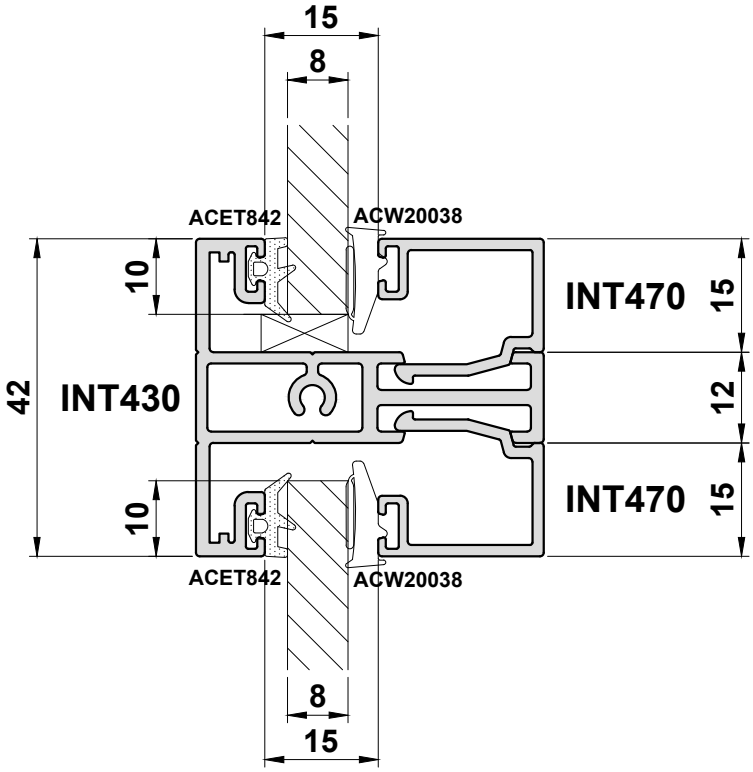

Do Not Scale From This Drawing

Section D

Statics

Fixed Screen - Couplers

General Size Limitations are shown on Page A03.

Section D

GENERAL INFORMATION - STATICS

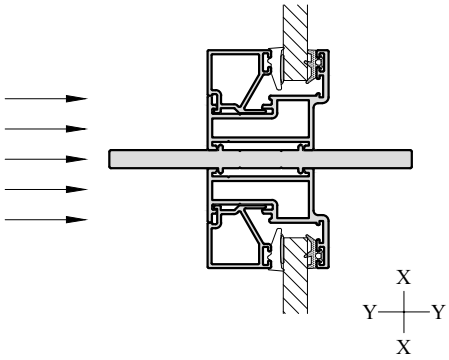

The position of the axes is an indication for the use and application of the moments of inertia (Ix and Iy) and the section modulus (Wx and Wy). We always choose the values of the axis perpendicular to the load to resist it.

To resist the loads we use the values Ix and Wx.

EXAMPLE

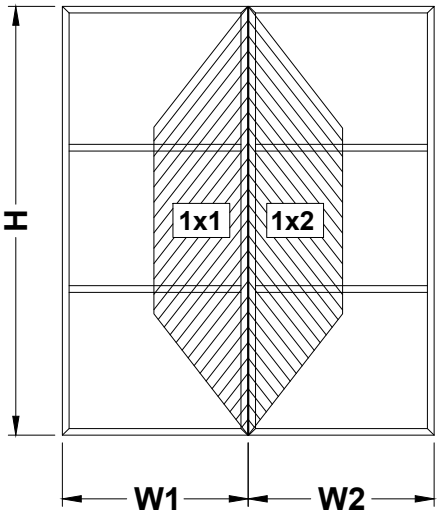

H = 210cm

W1 = 100cm

W2 = 100cm

P = 800 Pa

1) Determine Ixx value for the couplers (if required) using the Specification Wizard

Ixx = 27.6 cm^4

2) Determine profile combinations

Do Not Scale From This Drawing

Section D

PROFILE COMBINATIONS - IX - VERTICAL COUPLER : STATICS

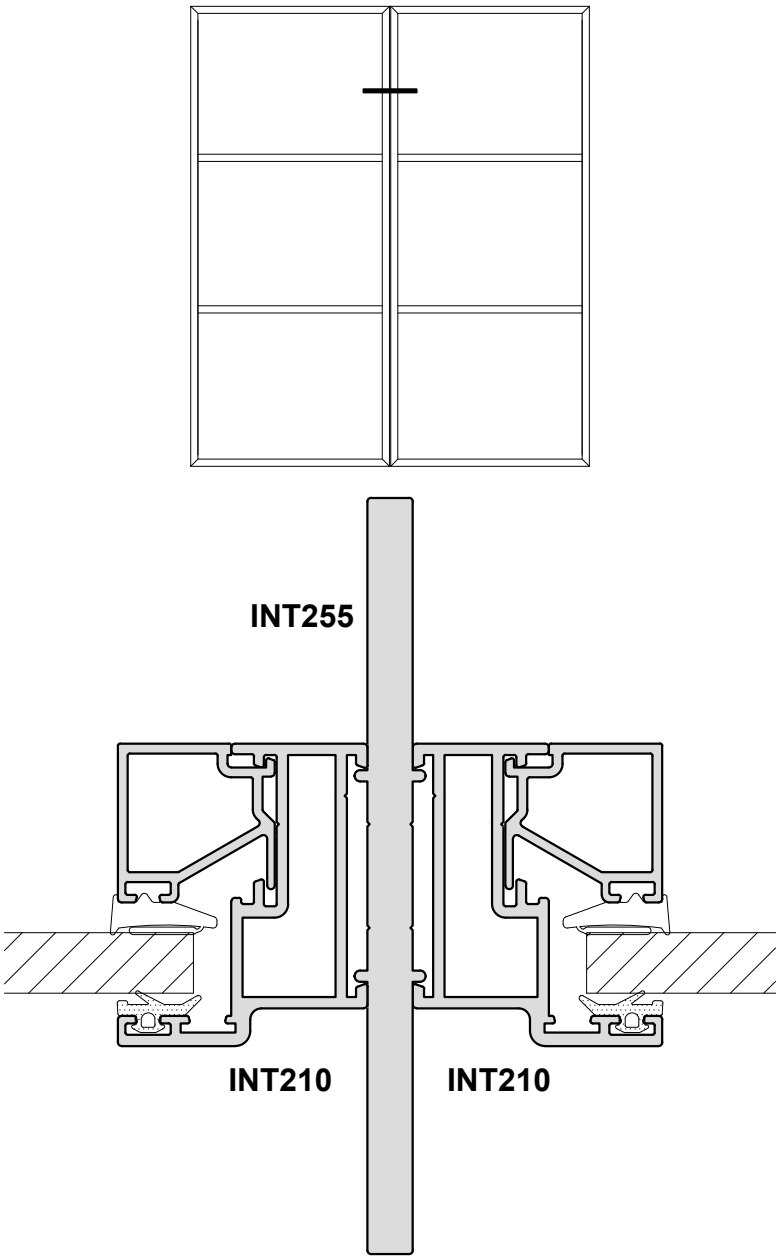

Ixx = 58.2 cm^4

Do Not Scale From This Drawing

Section D

PROFILE COMBINATIONS - IX - VERTICAL COUPLER : STATICS

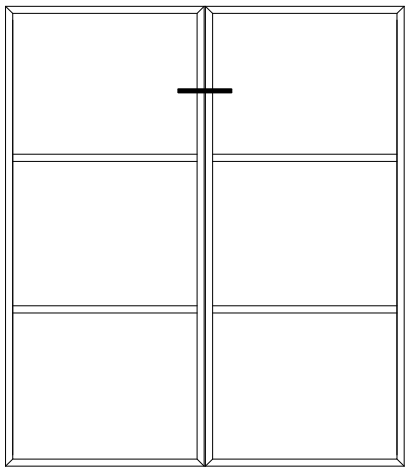

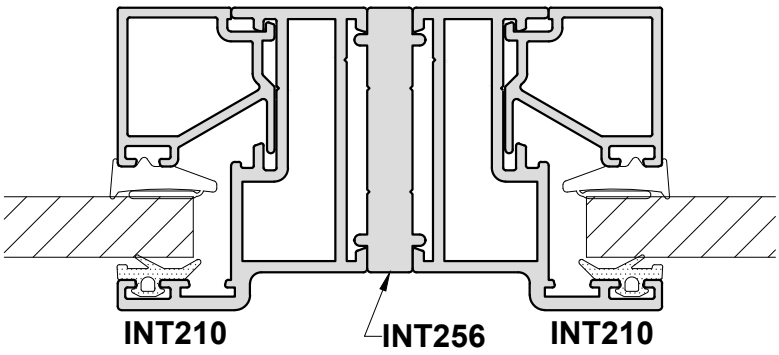

Ixx = 10.4 cm^4

Do Not Scale From This Drawing

Section D

PROFILE COMBINATIONS - IX - VERTICAL COUPLER : STATICS

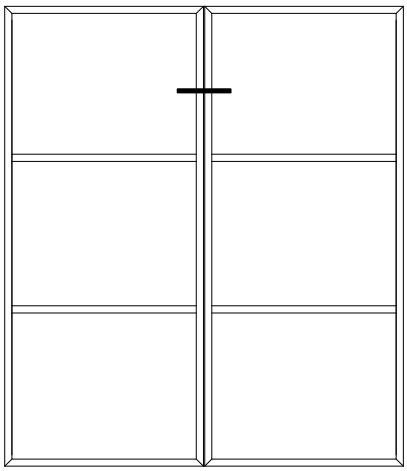

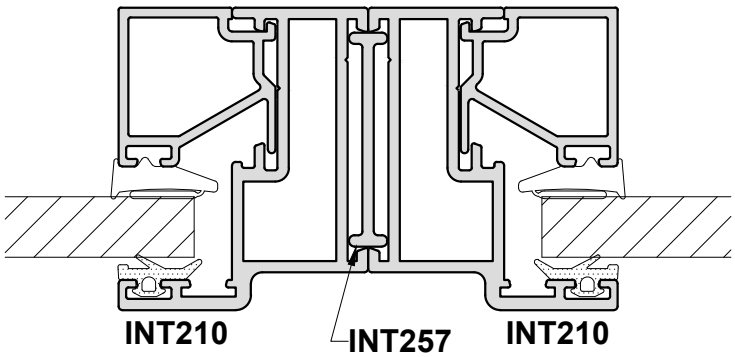

Ixx = 8.1 cm^4

Section D

RECOMMENDED DESIGN FIXED SCREENS LIMITATIONS

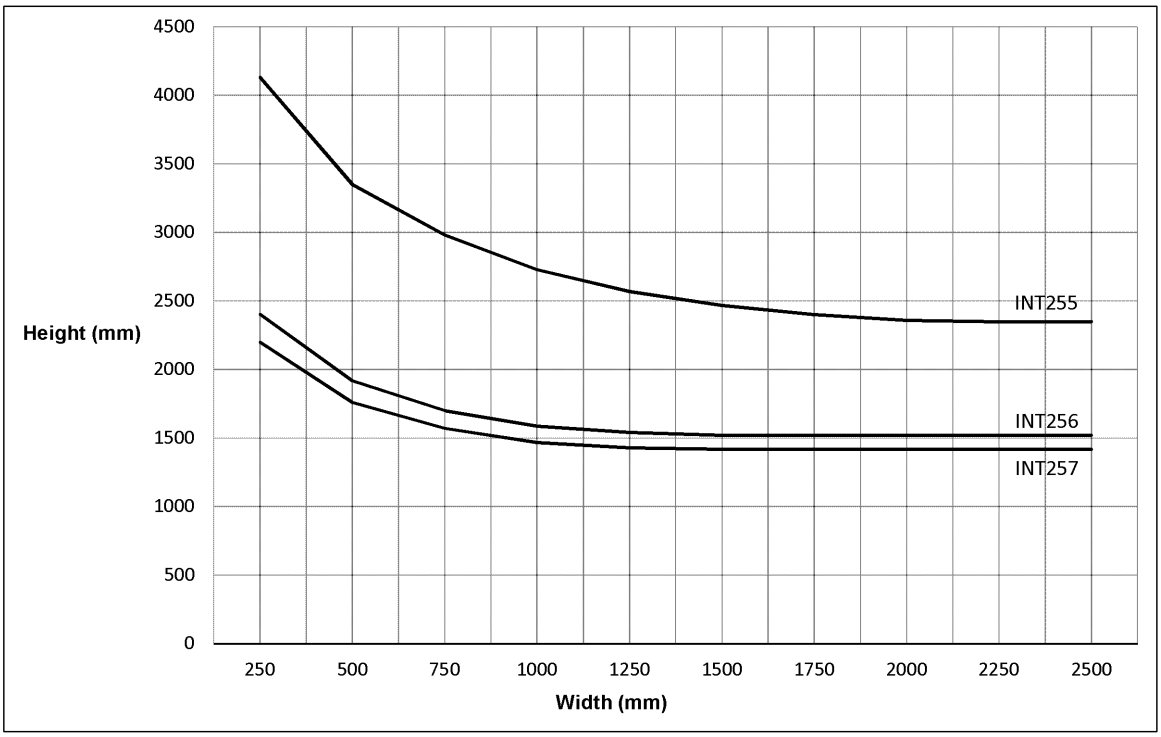

IMPORTANT NOTE:

Fixed screen sizes are based on a coupler limit at 0.8kN/m.

Size limits can vary depending on application and the category of building.

Please refer to Approved Document K and CWCT for further information on the required loading for your project.

For advise on screen sizes outside of the recommended design limitations, please contact the Technical Department at Smart Systems Ltd Tel: 01934 876100

Do Not Scale From This Drawing

Section D

PROFILE COMBINATIONS - IX - HORIZONTAL COUPLER : STATICS

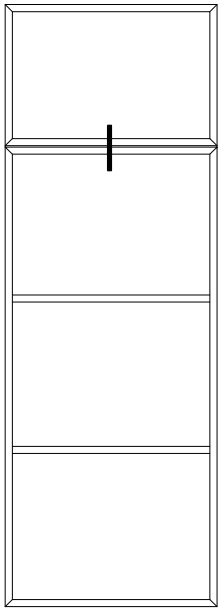

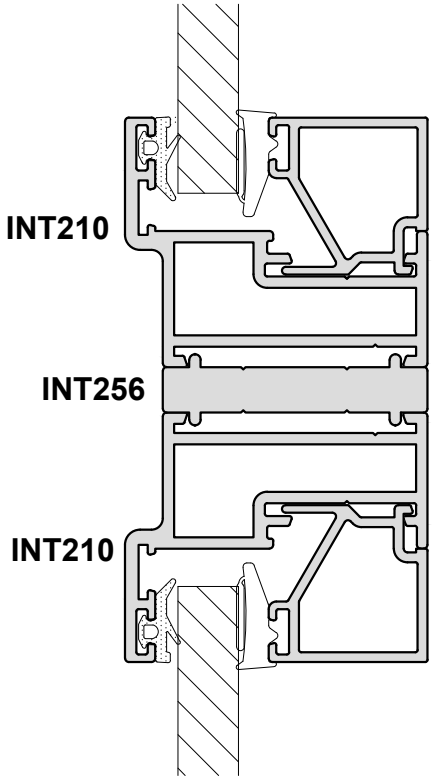

Ixx = 12.8 cm^4

Ixx = 10.4 cm^4
Iyy = 12.8 cm^4

Do Not Scale From This Drawing

ISSUED: DECEMBER 2021

Section D

PROFILE COMBINATIONS - IX - HORIZONTAL COUPLER : STATICS

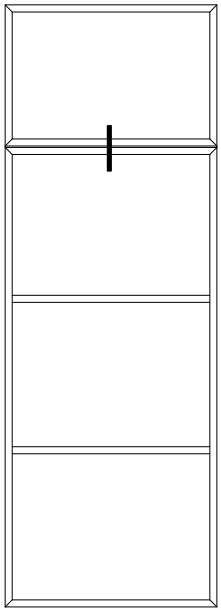

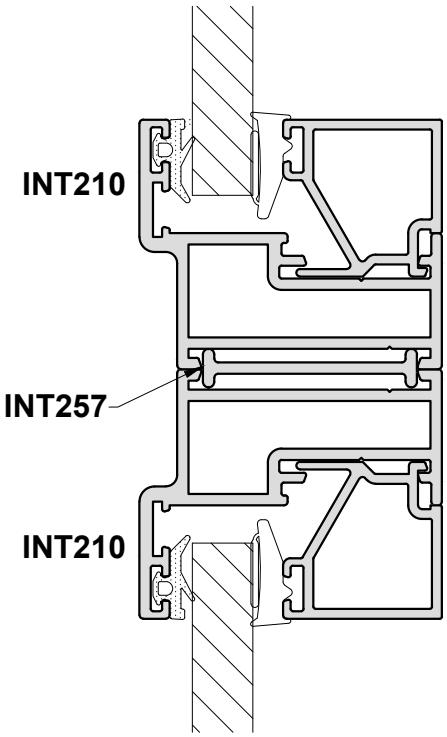

Ixx = 8.1 cm^4
Iyy = 9.2 cm^4

Do Not Scale From This Drawing

Section D

PROFILE COMBINATIONS - IX - VERTICAL COUPLER : STATICS

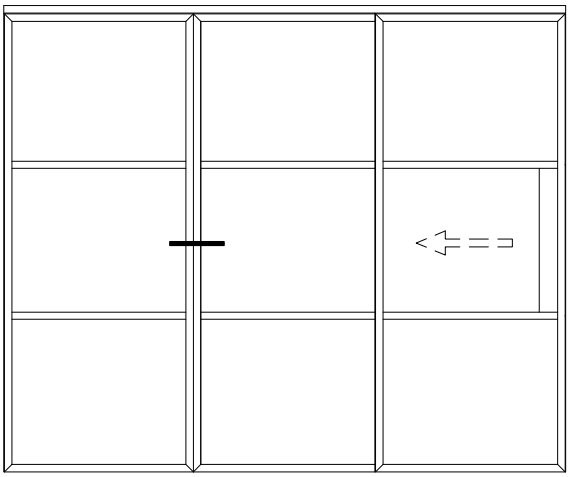

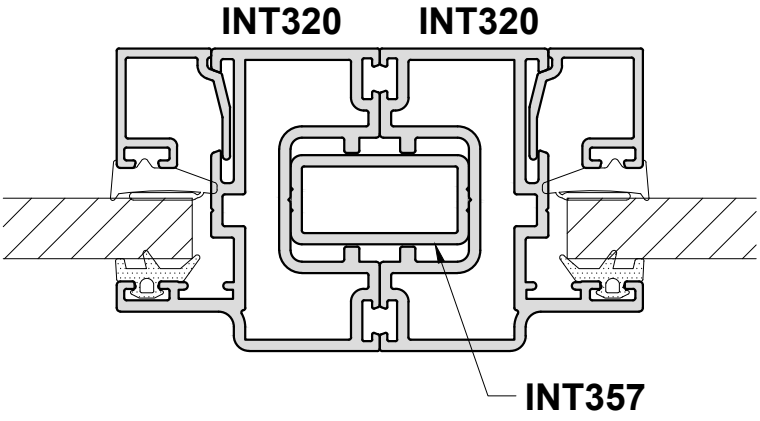

Ixx = 9.6 cm^4

Do Not Scale From This Drawing

Section E

E INT

Construction Drawings

Corner Joint Details..... E03
Crimping Details..... E04 - E05
Transom Details..... E06 - E07
Deep Bottom Rail Details..... E08
Hinged Door Lock Preparation..... E09
Pivot Door Lock Preparation..... E10
Open In Door Hinge Details..... E11
Open In Double Door - Bottom Detail..... E12
Open In Double Door - Top Detail..... E14
Sliding Door - Roller Fixing..... E14
Pivot Door - ACSIN201 Preparation & Fixing (Top Detail)..... E15
Pivot Door - ACSIN201 Preparation & Fixing (Bottom Detail)..... E16
Glazing Details - Fixed Screens, Hinged & Sliding Doors..... E17
Glazing Details - Pivot Doors..... E18

Corner Joint Details

Notes

1. Degrease mitre sections
2. Cover mitred faces with ACSIL04
3. Apply ACSIL013 to cleat chamber

Table 1

KL Colour	Sealant Part Number
Black	ACSIL04BL
White	ACSIL04WP
Clear	ACSIL04CL
KL001	ACSIL04KL001
KL002	ACSIL04KL002
KL003	ACSIL04KL003
KL004	ACSIL04KL004
KL005	ACSIL04KL005
KL006	ACSIL04KL006
KL007	ACSIL04KL007
KL010	ACSIL04KL010
KL011	ACSIL04KL011
KL012	ACSIL04KL012
KL013	ACSIL04KL013

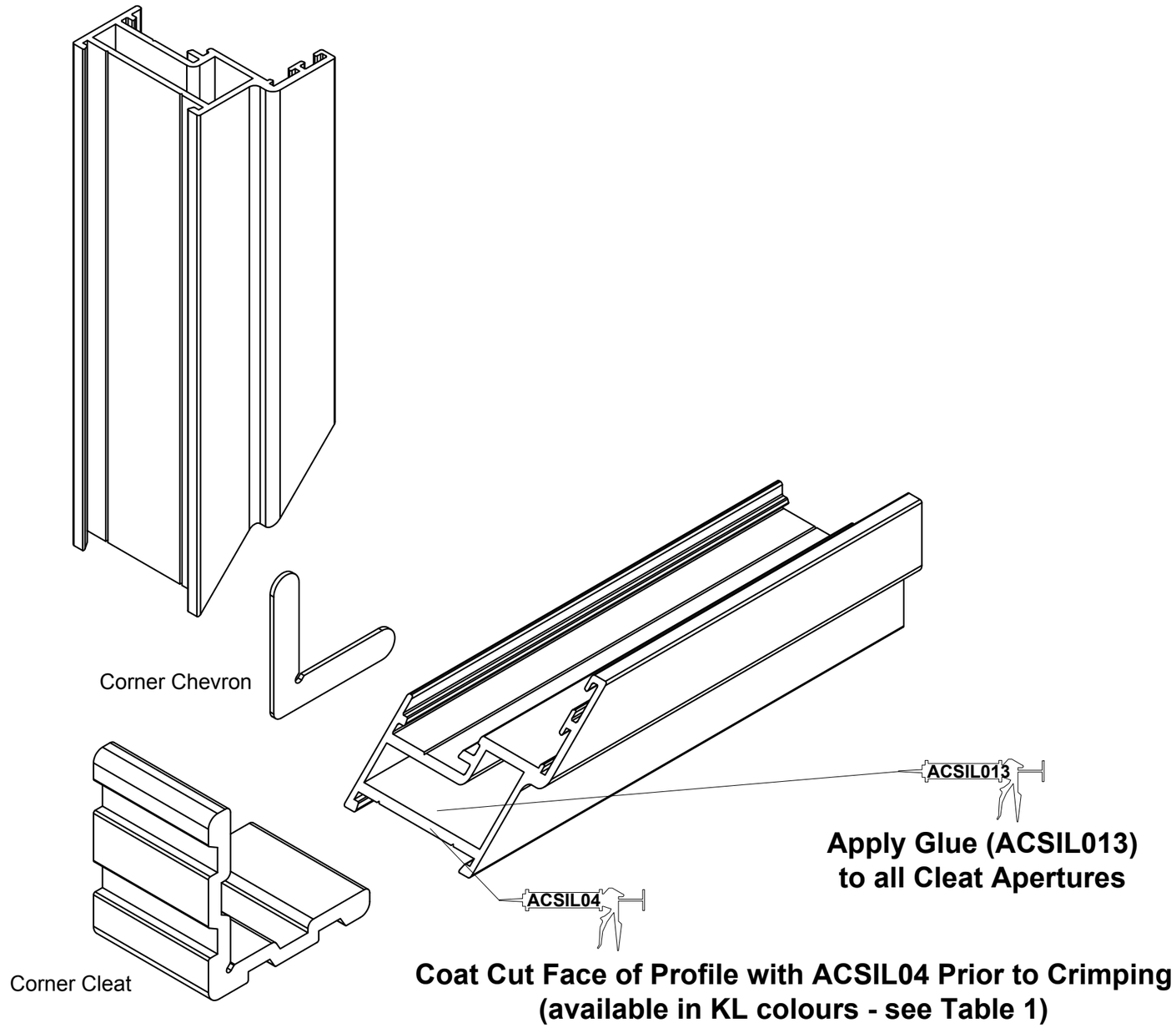

Do Not Scale From This Drawing

Crimping Details

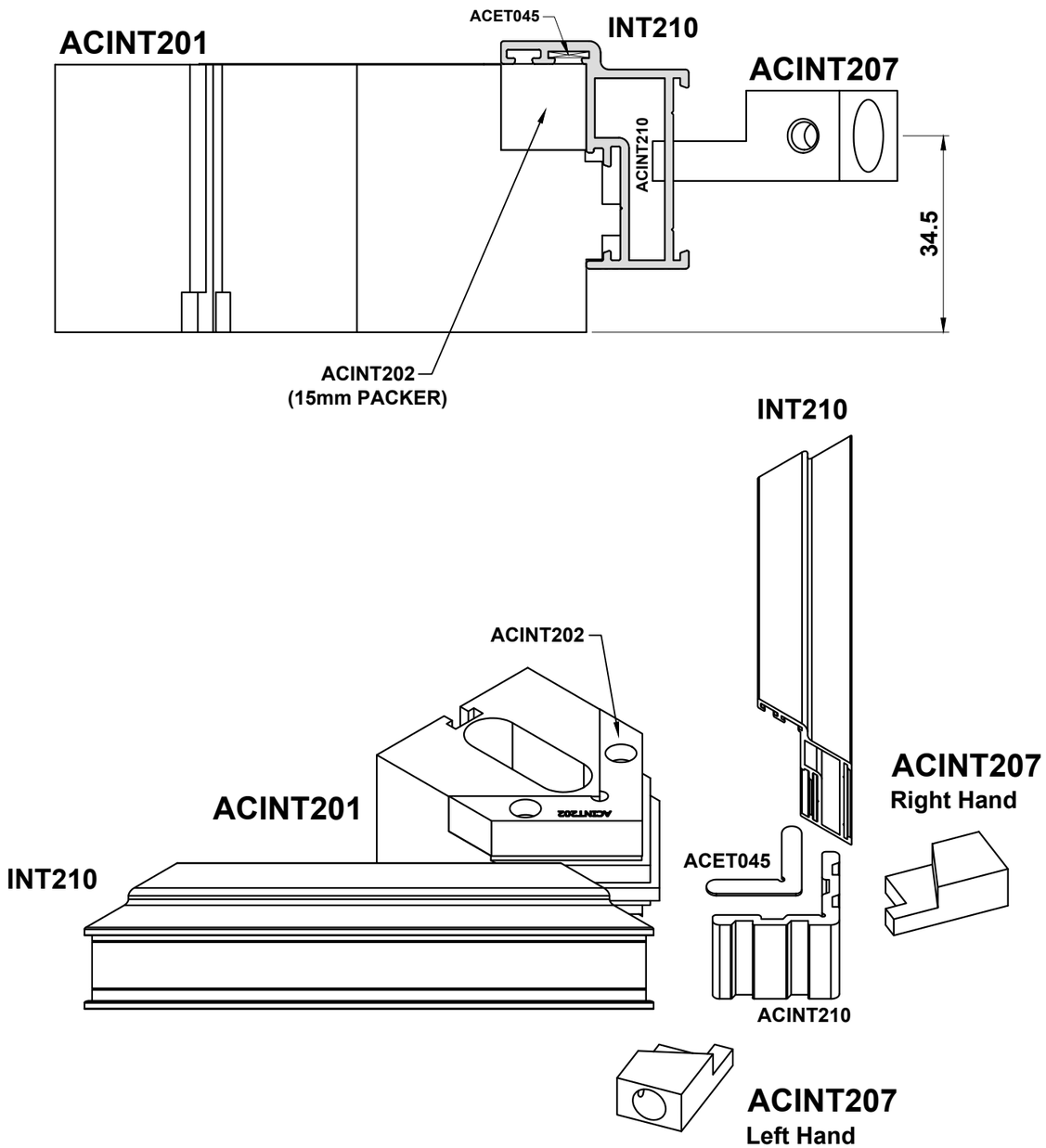

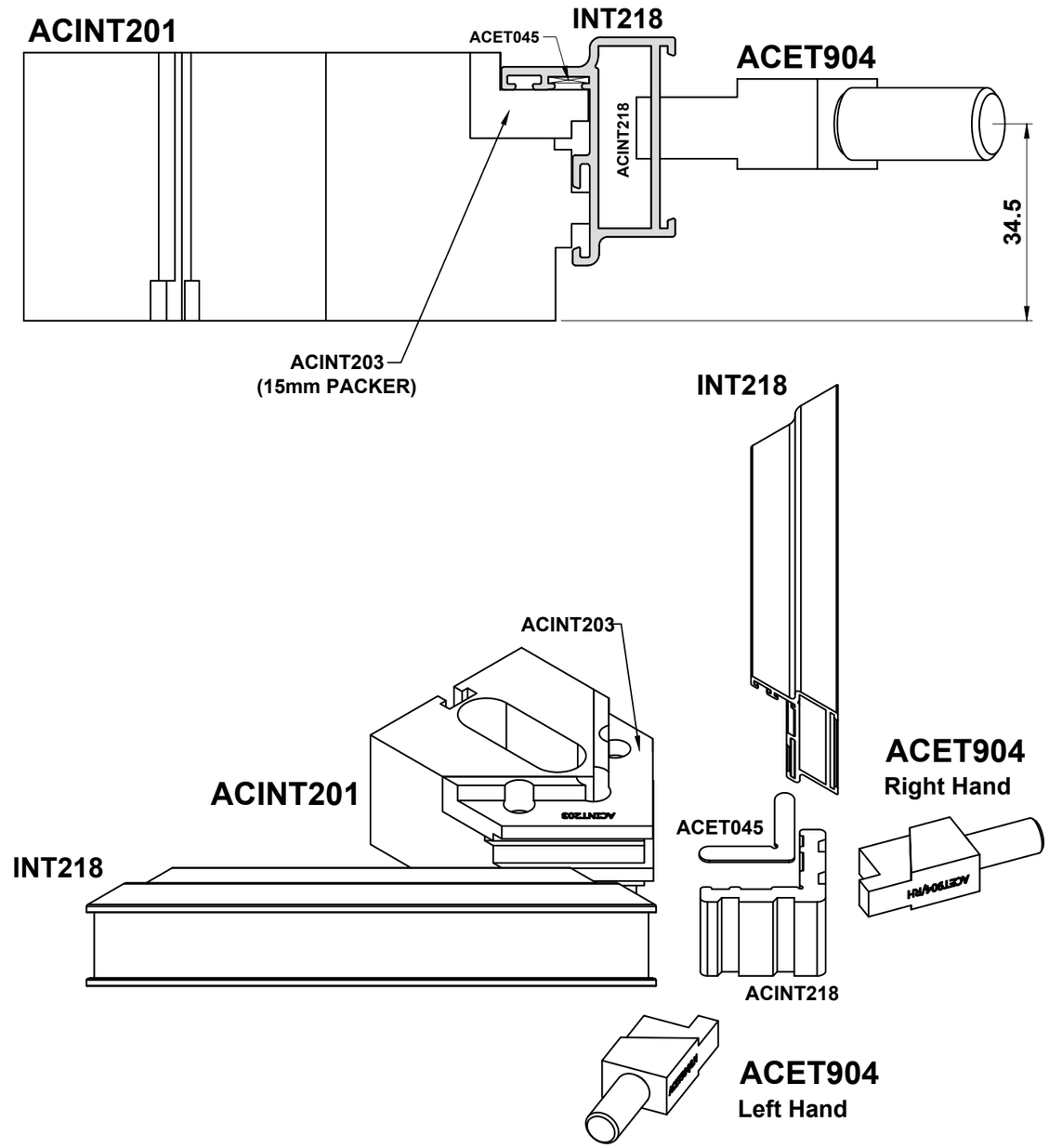

Do Not Scale From This Drawing

Crimping Details

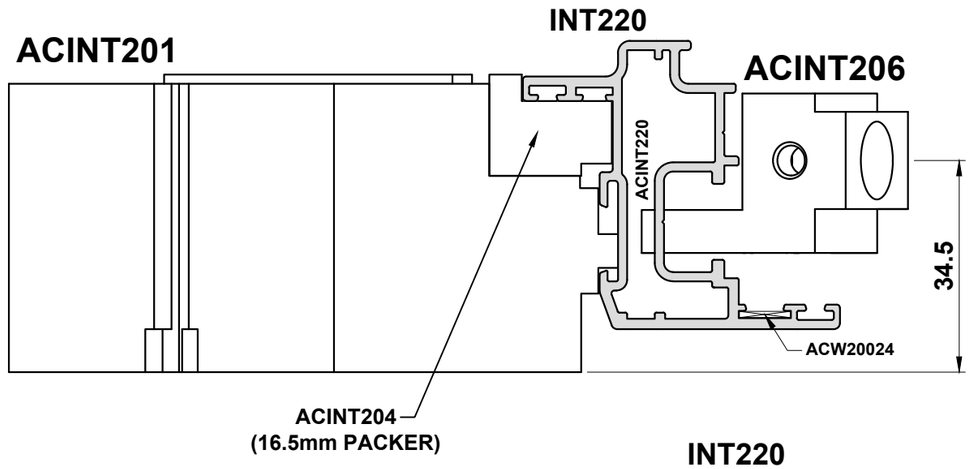

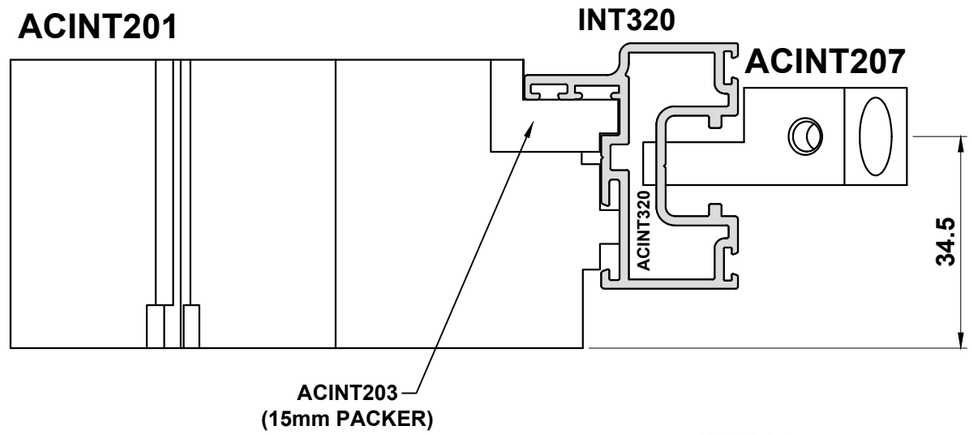

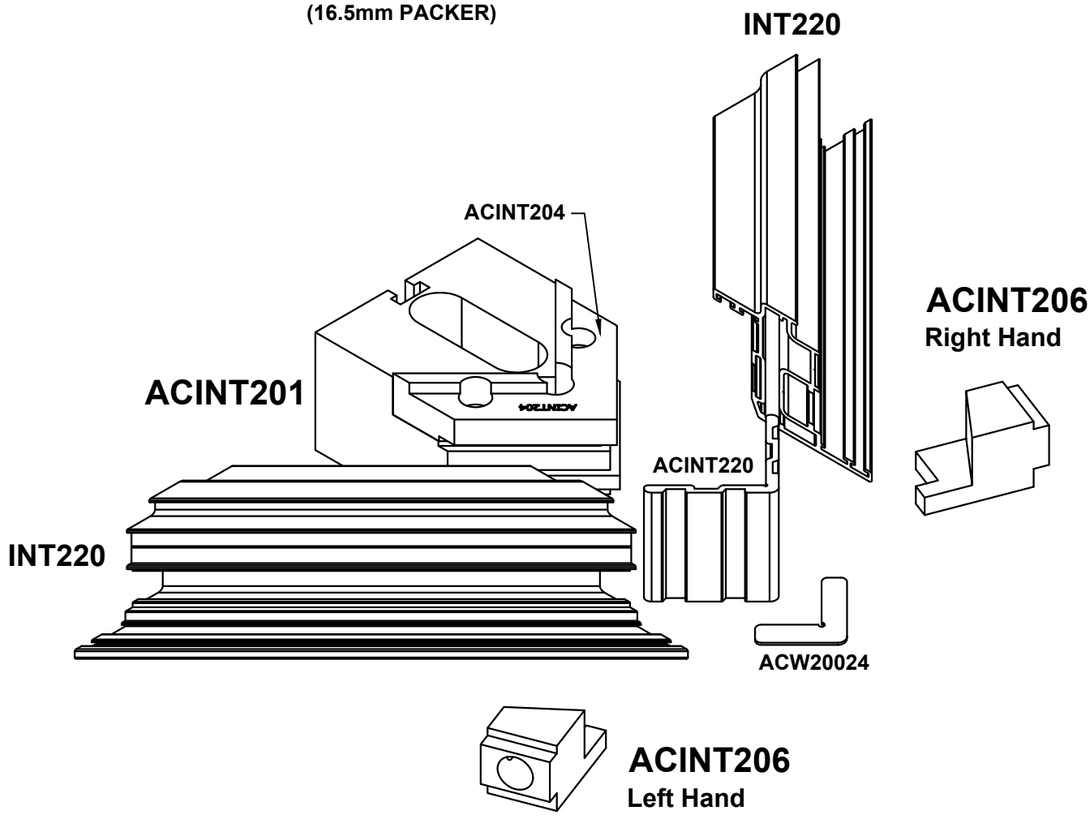

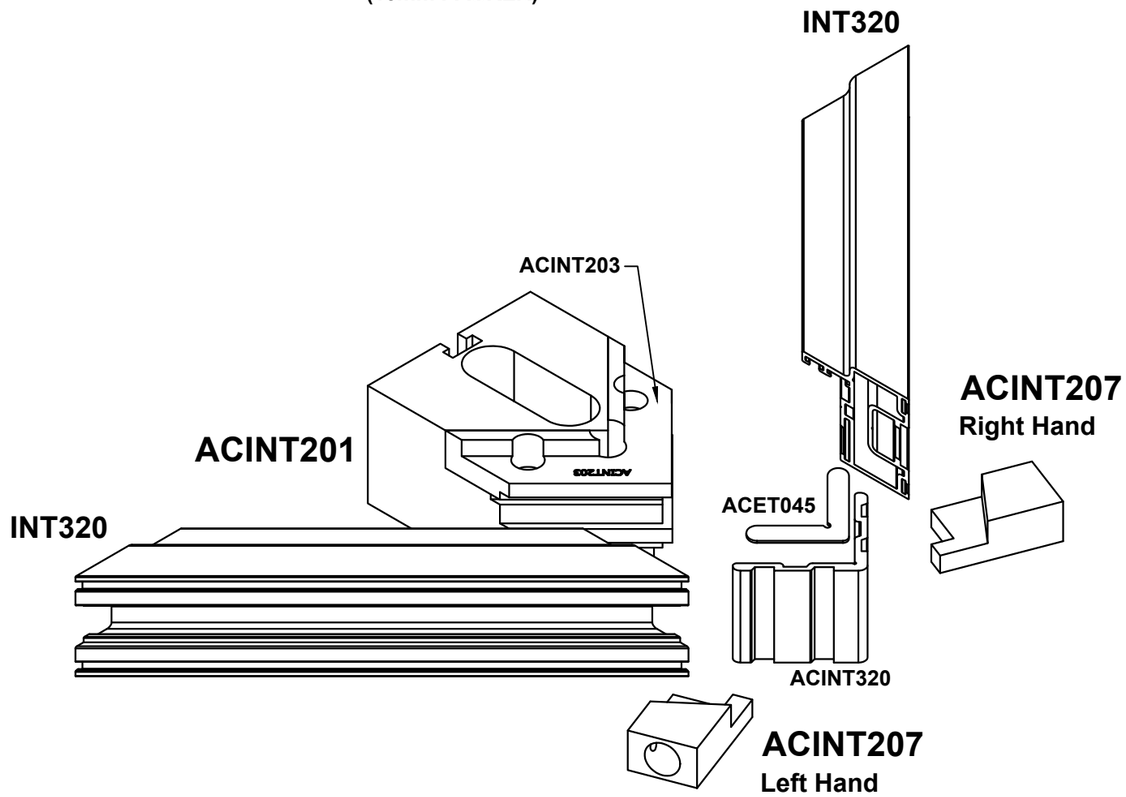

Do Not Scale From This Drawing

Transom Detail

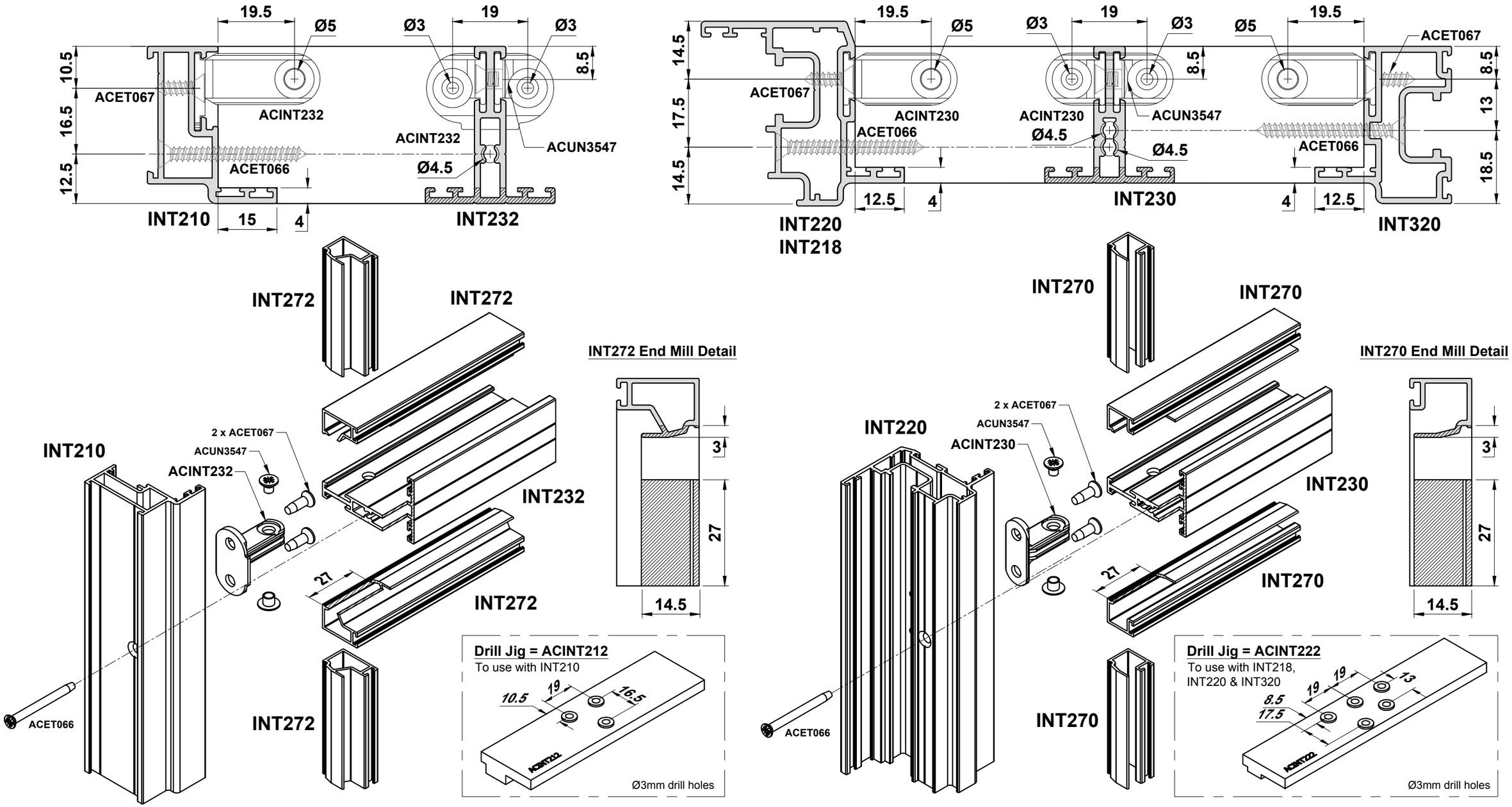

Do Not Scale From This Drawing

Sash / Transom - Transom Detail

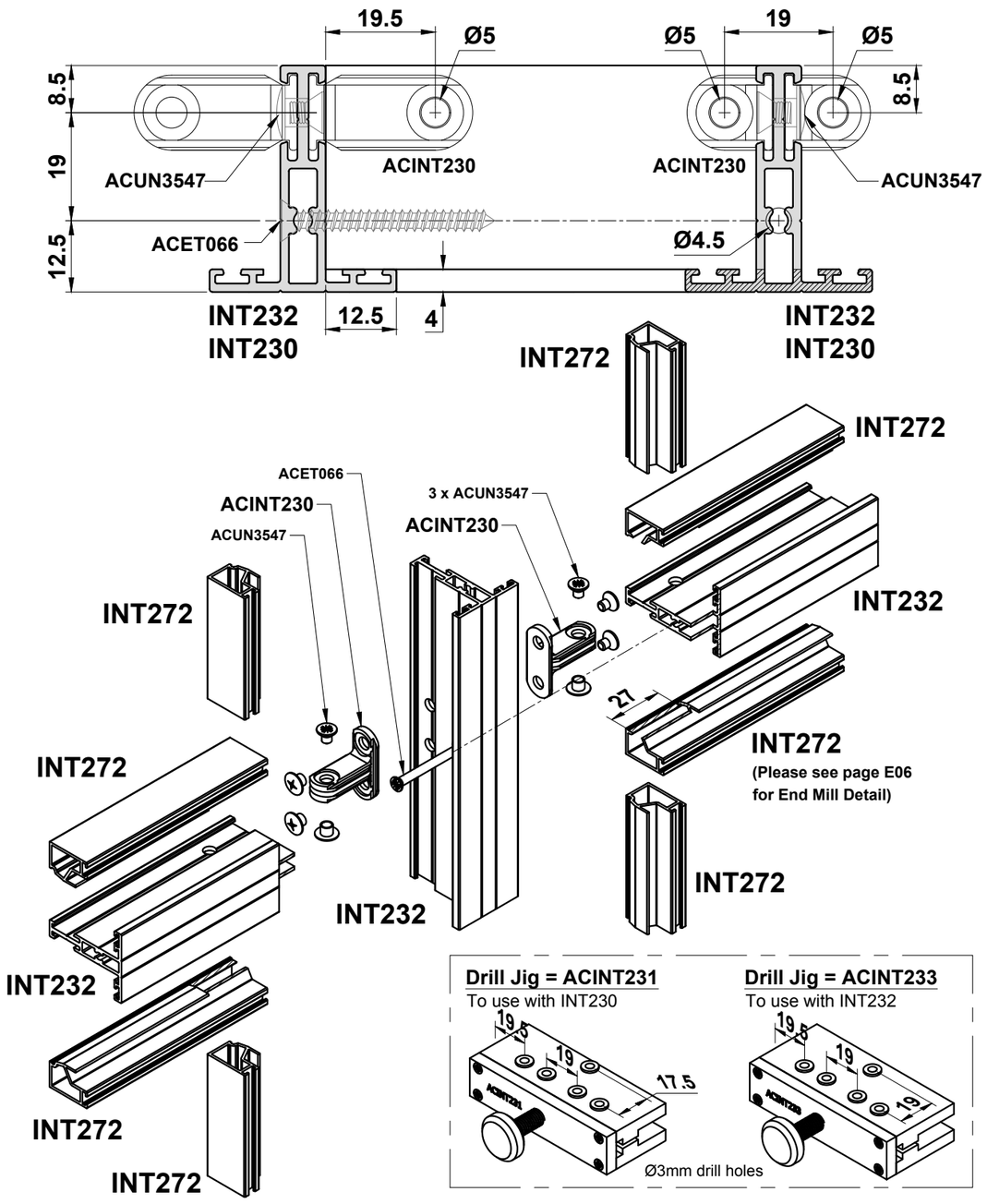

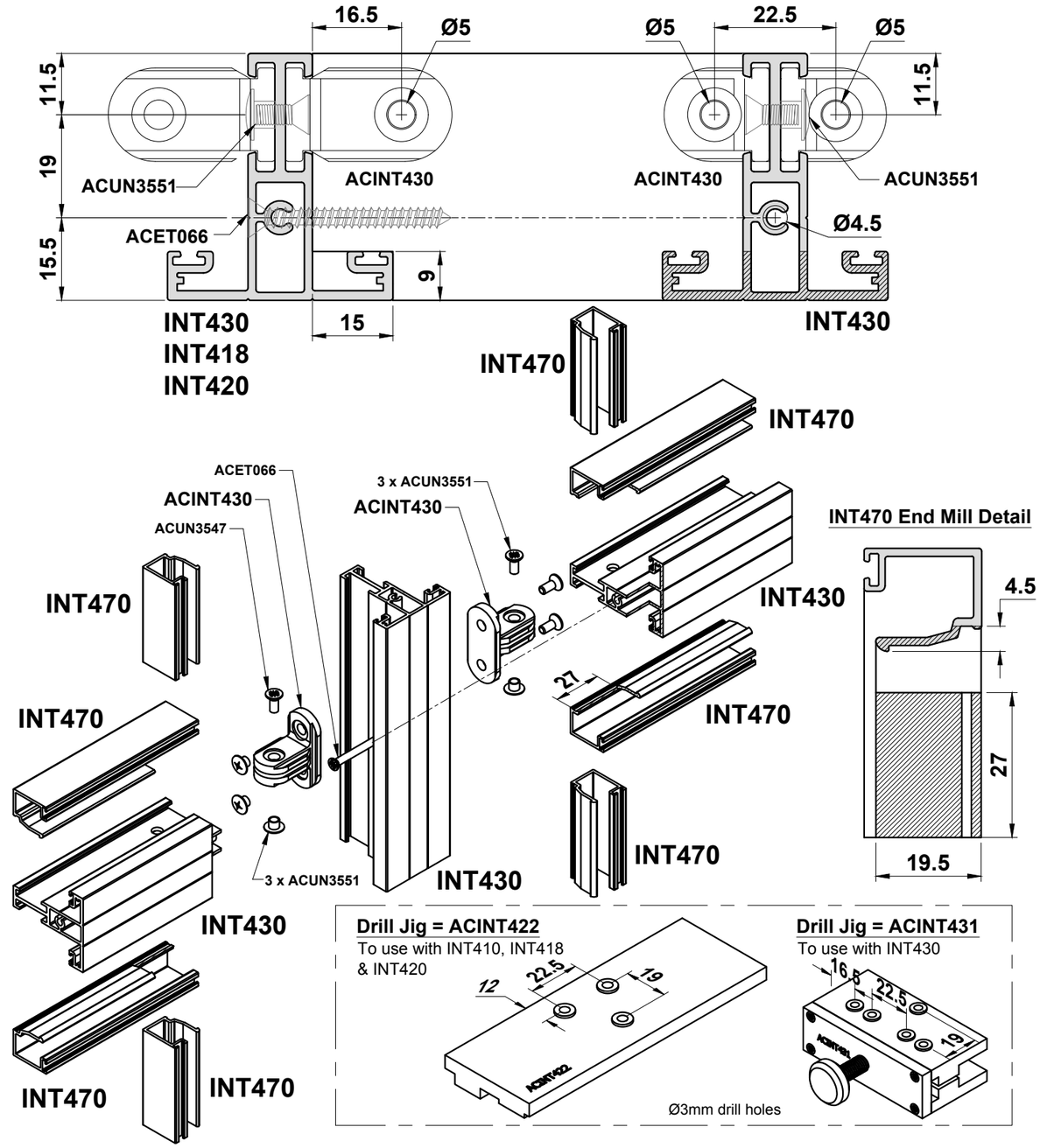

Do Not Scale From This Drawing

Deep Bottom Rail Detail

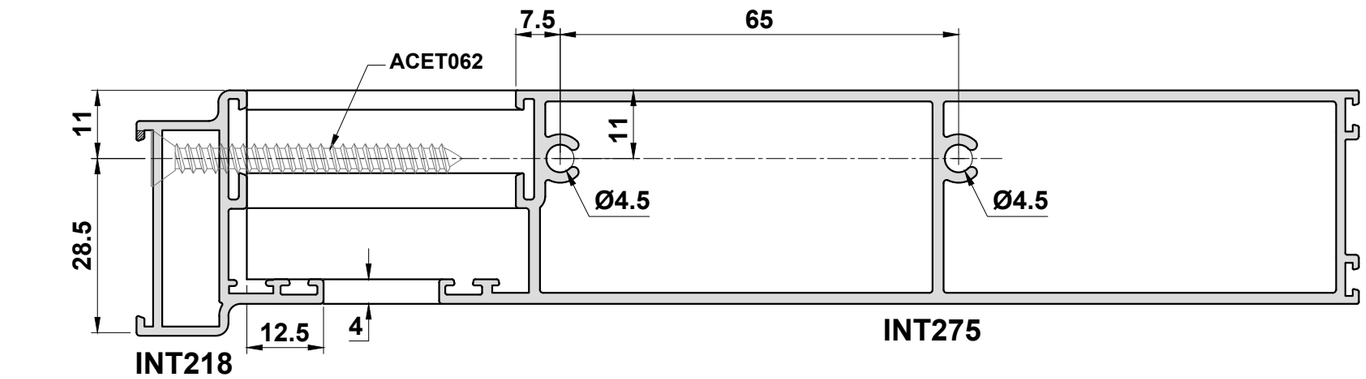

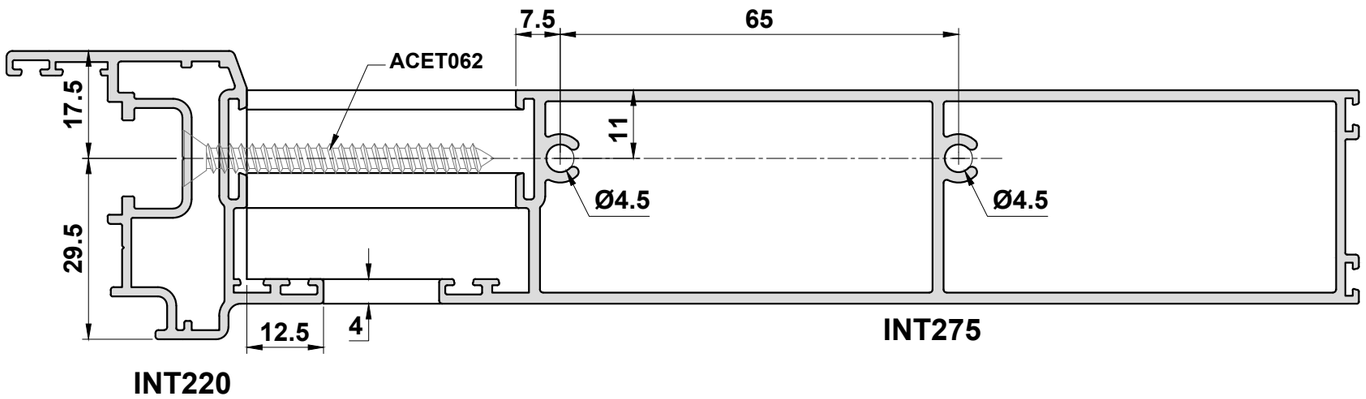

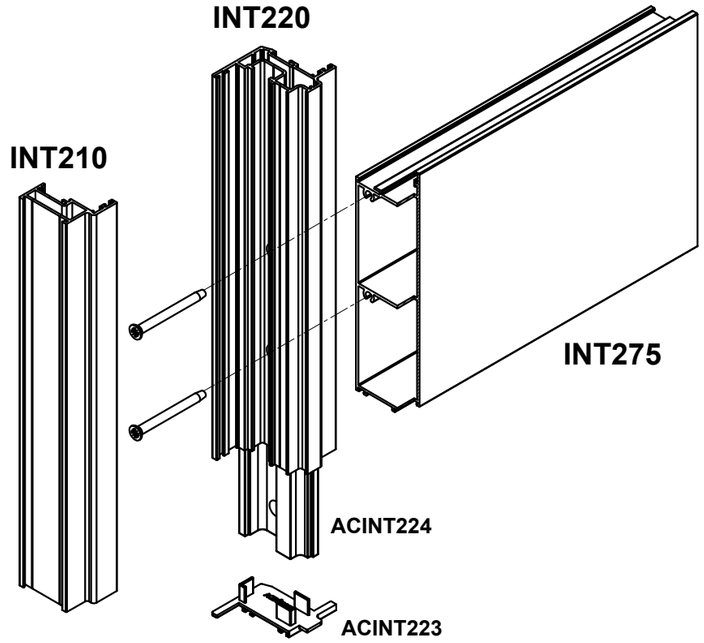

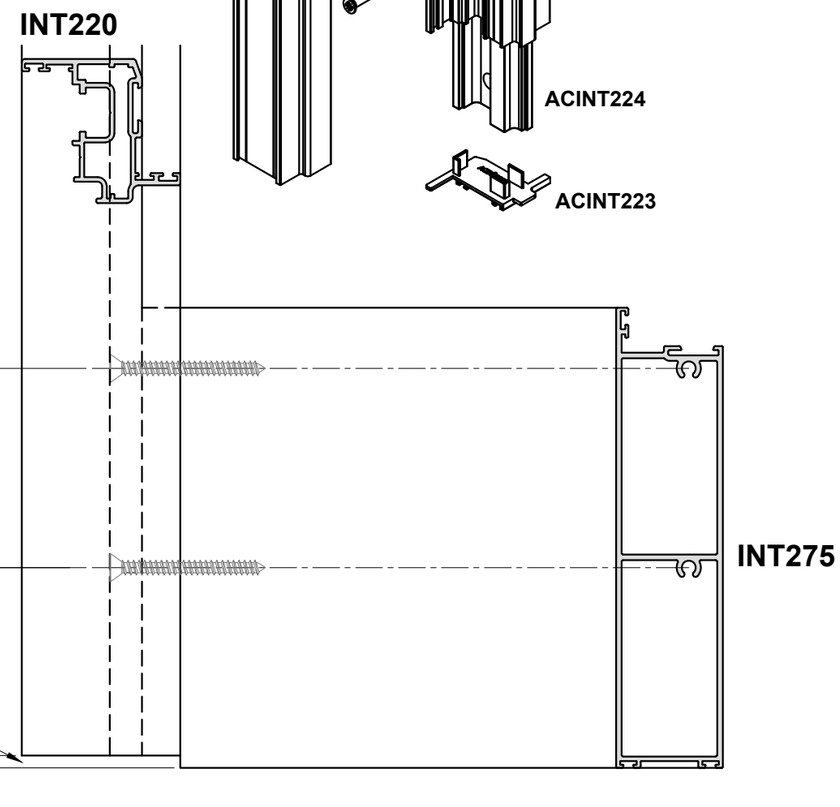

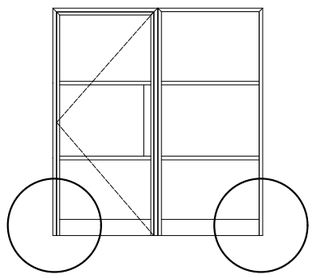

Do Not Scale From This Drawing

Hinged Door Lock Preparation

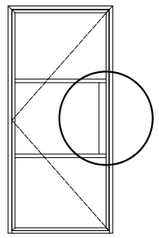

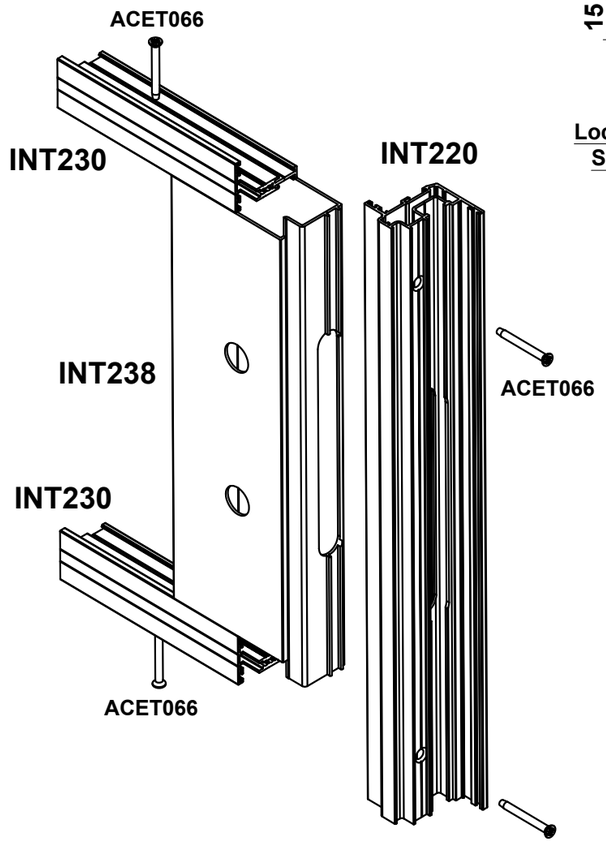

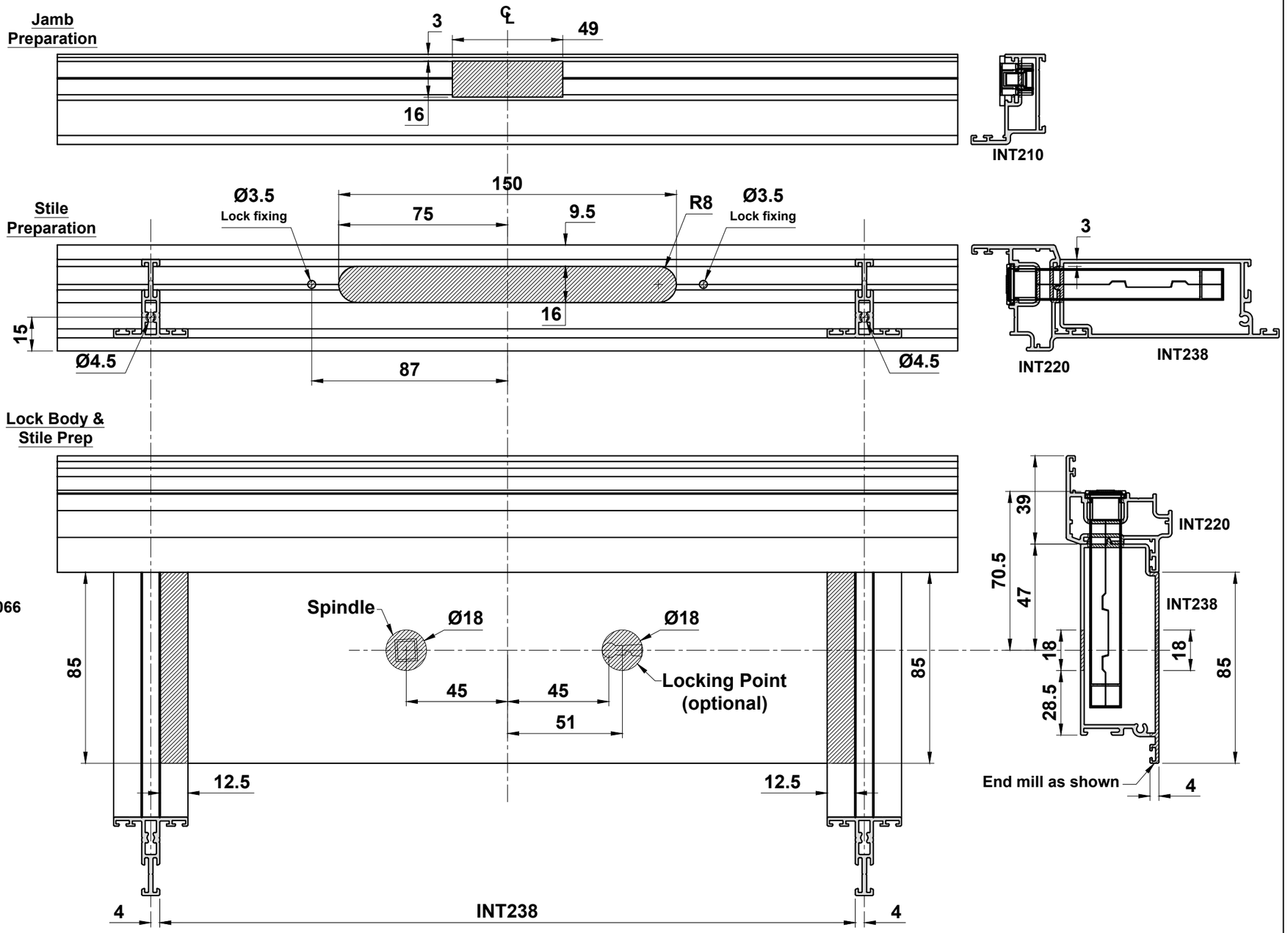

See page E06 for transoms/ sash joint details

Do Not Scale From This Drawing

Pivot Door Lock Preparation

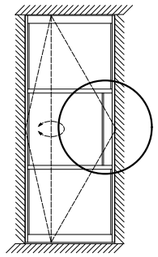

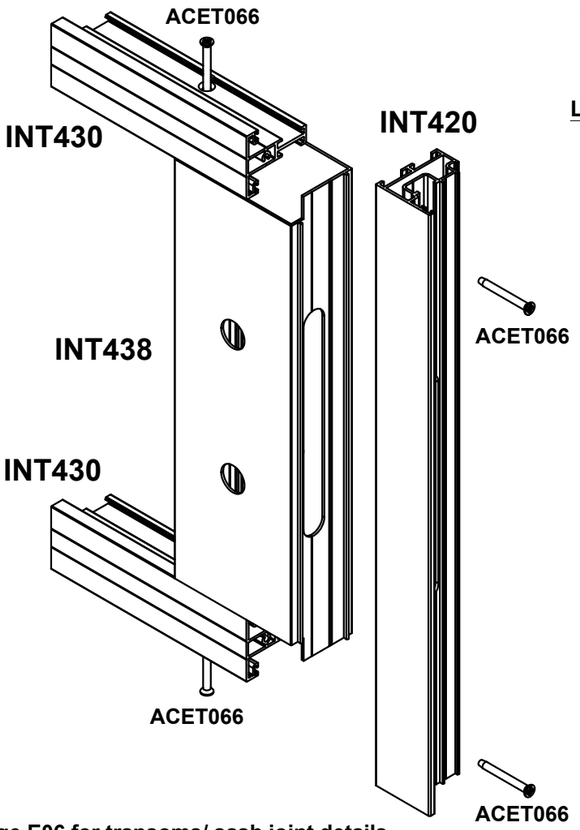

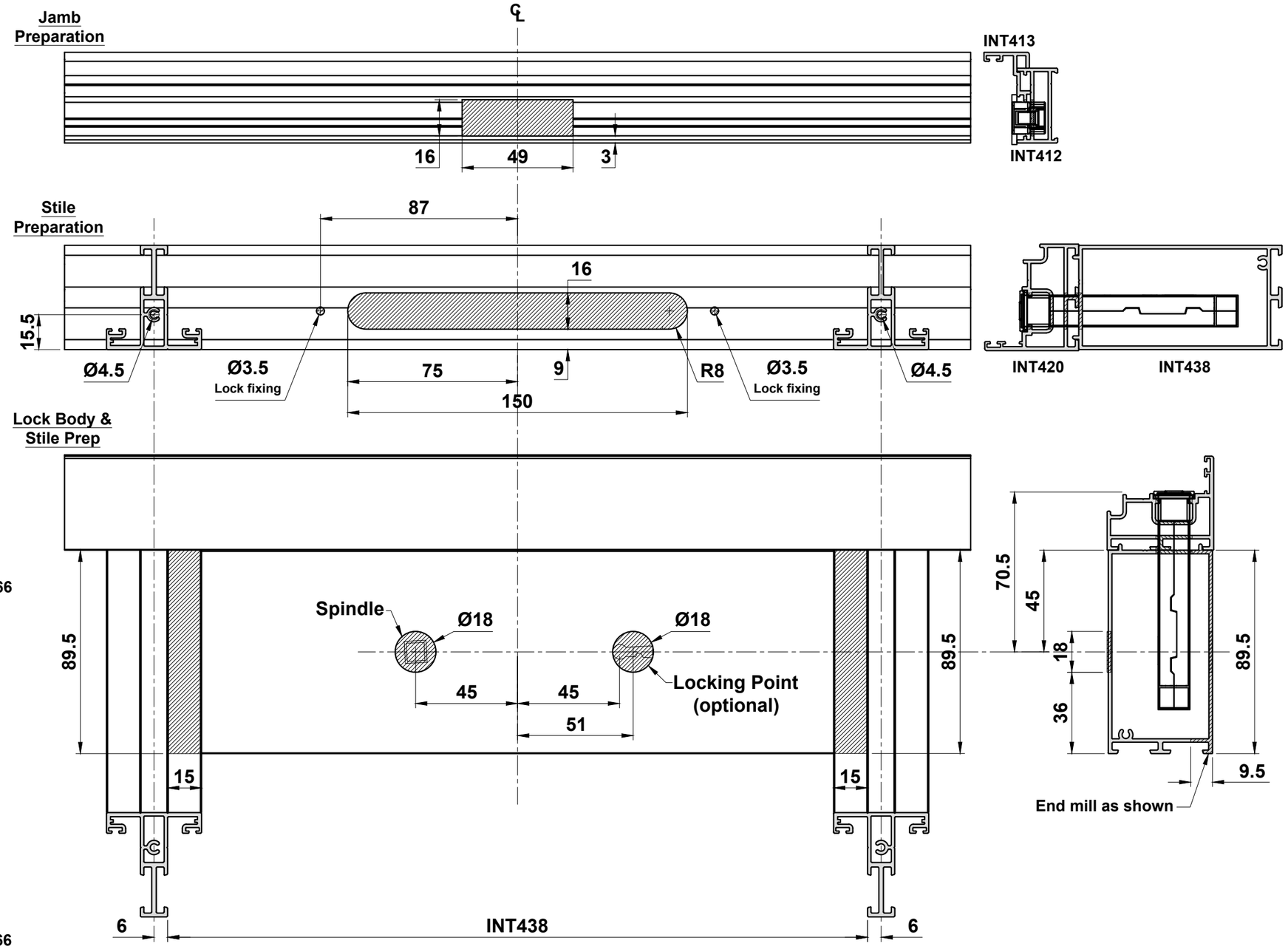

See page E06 for transoms/ sash joint details

Do Not Scale From This Drawing

Open In Door Hinge Details

Recommended hinge positions

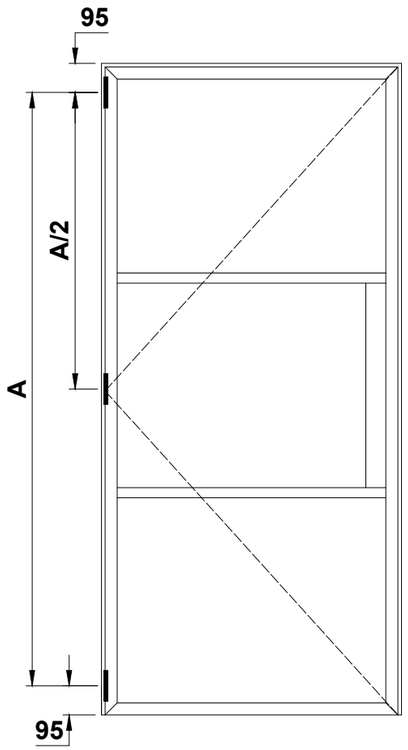

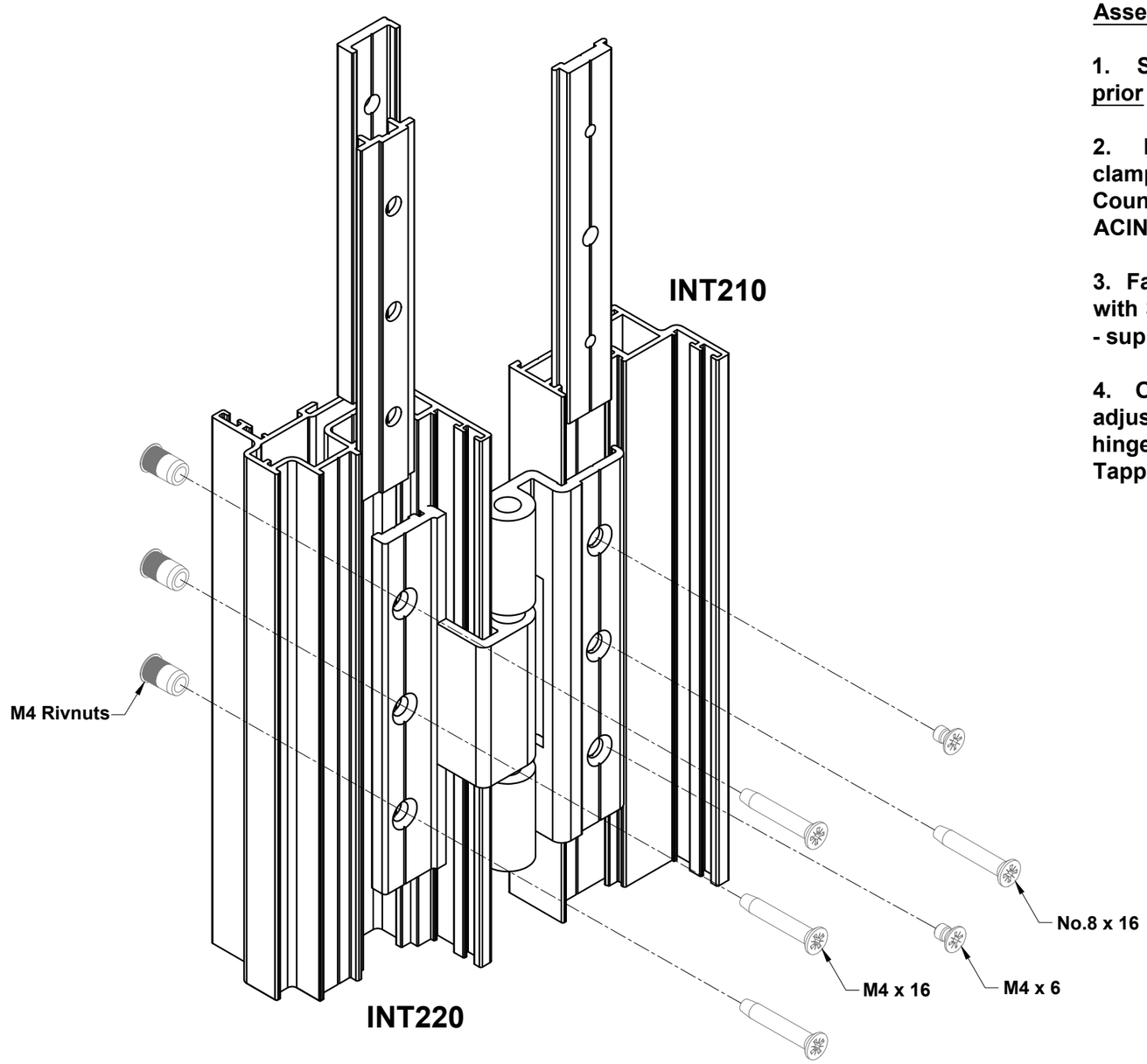

Assembly Instructions

1. Slide Hinge Backplates into outerframe prior to crimping.

2. Locate each hinge in outerframe and clamp in position using 2No. M4 x 6mm Countersunk screws - supplied with ACINT221.

3. Fasten Hinge to Sash through the adaptor with 3No. M4 x 16mm Screws into the rivnuts - supplied with ACINT221.

4. Once the sash requires no further adjustment fix the outerframe half of the hinge with 1 x No.8 x 16mm Pozi Csk Self Tapping screw.

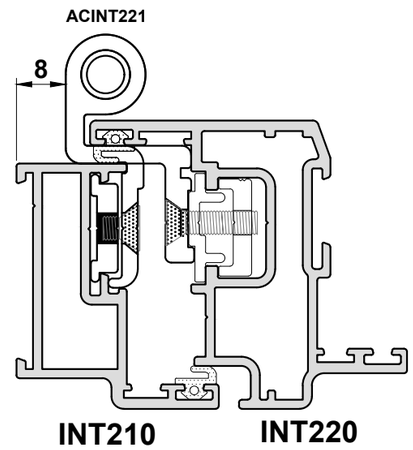

Do Not Scale From This Drawing

Open In Double Door - Bottom Detail

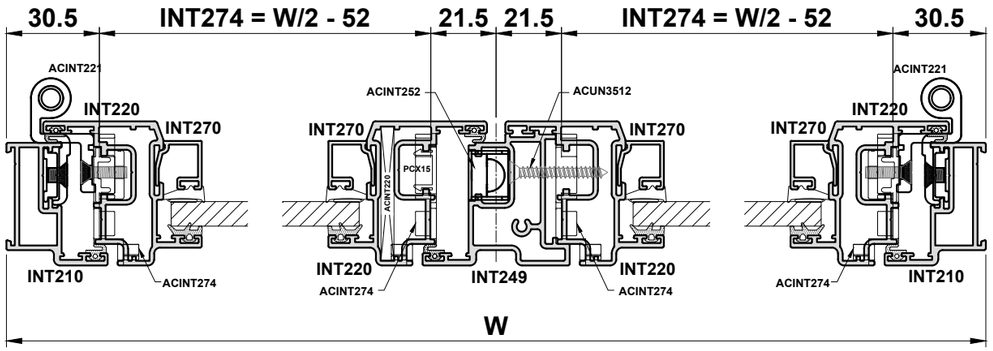

Keep Location

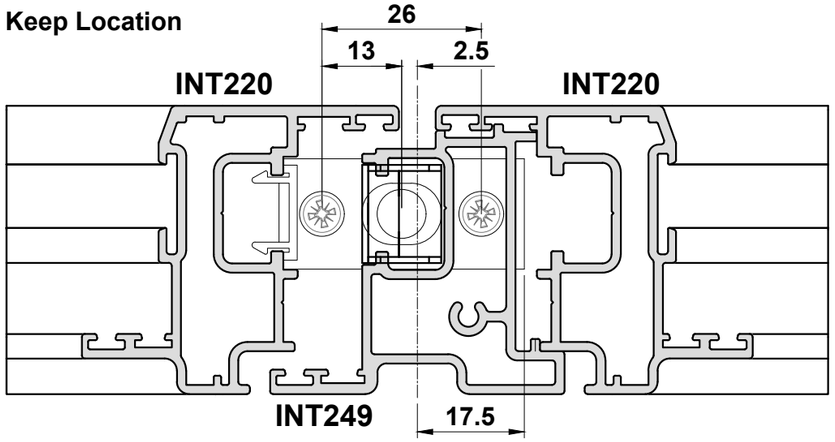

INT249 Machining Detail

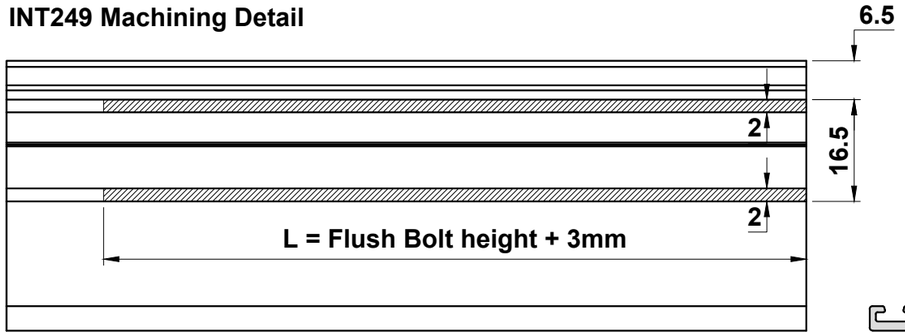

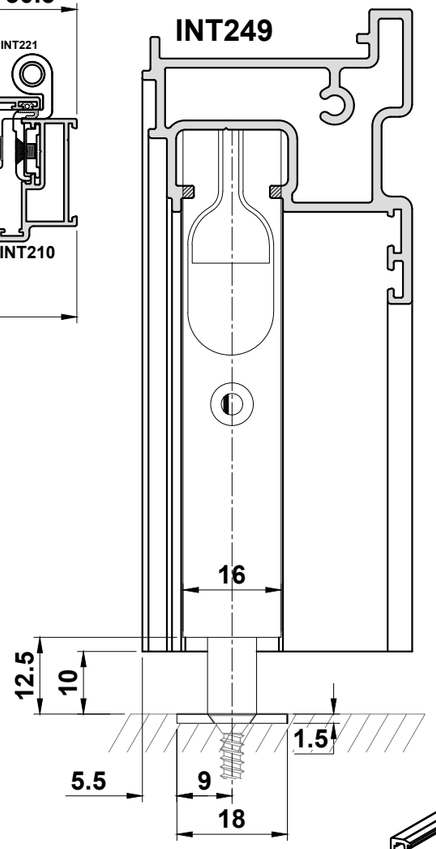

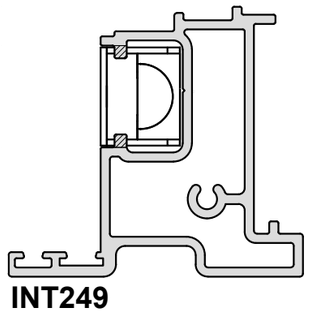

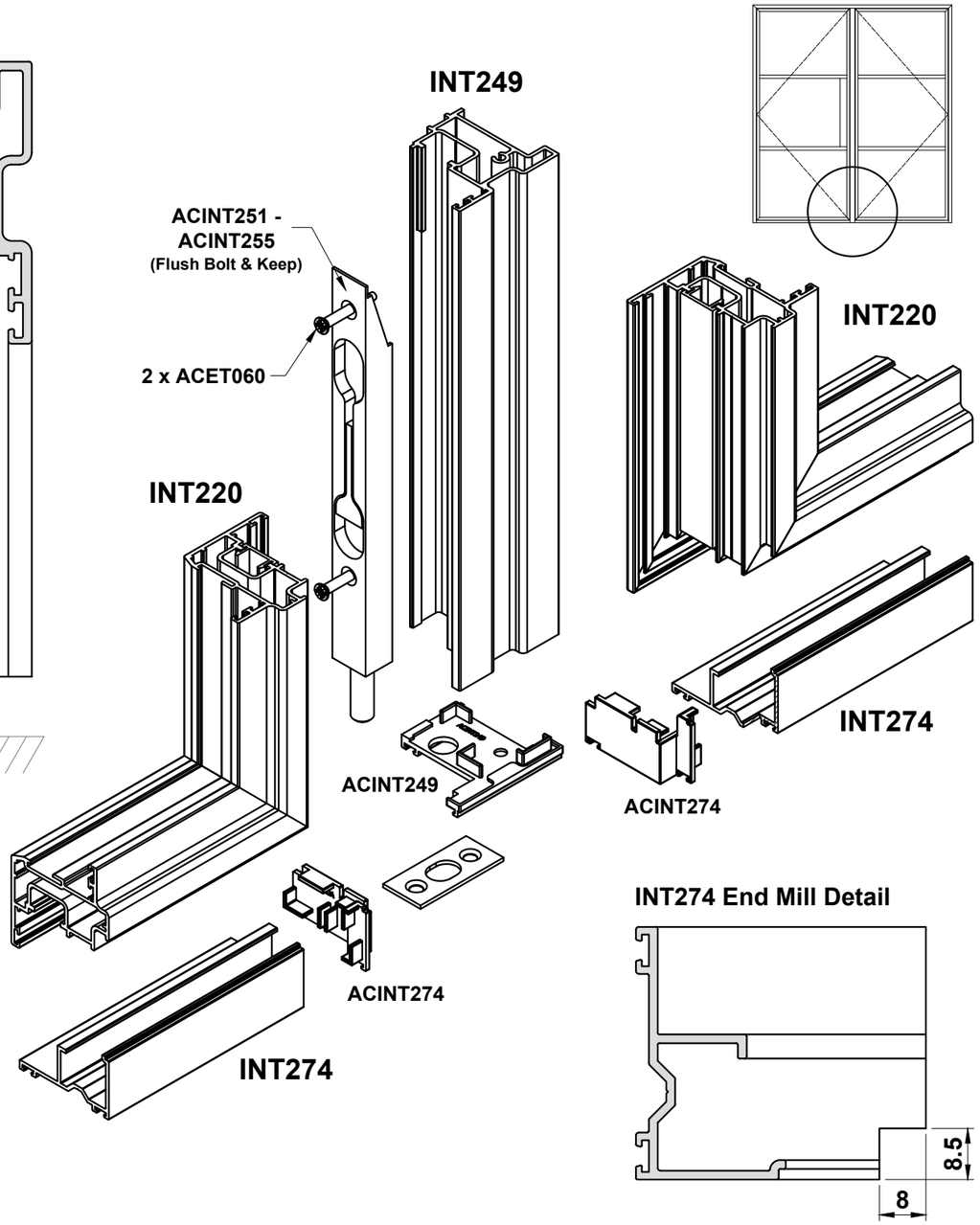

INT274 End Mill Detail

Do Not Scale From This Drawing

Open In Double Door - Top Detail

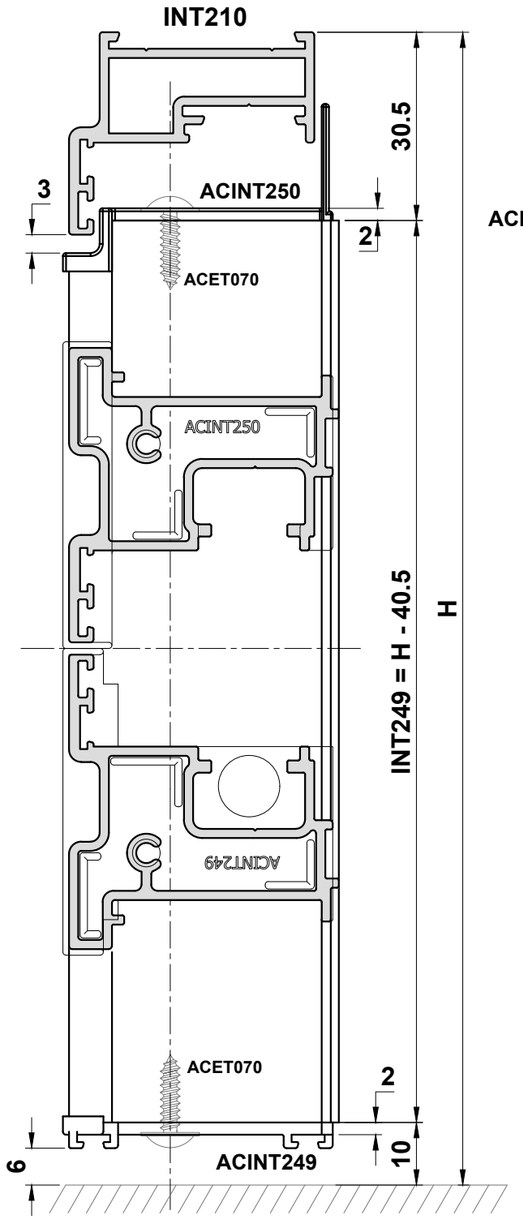

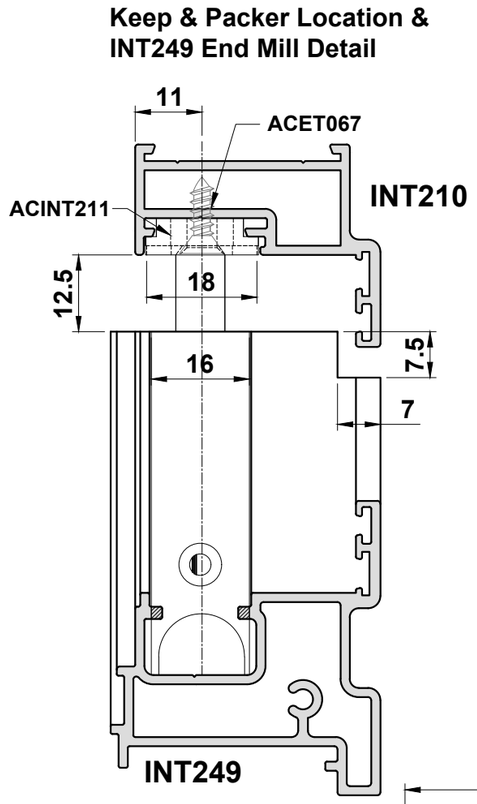

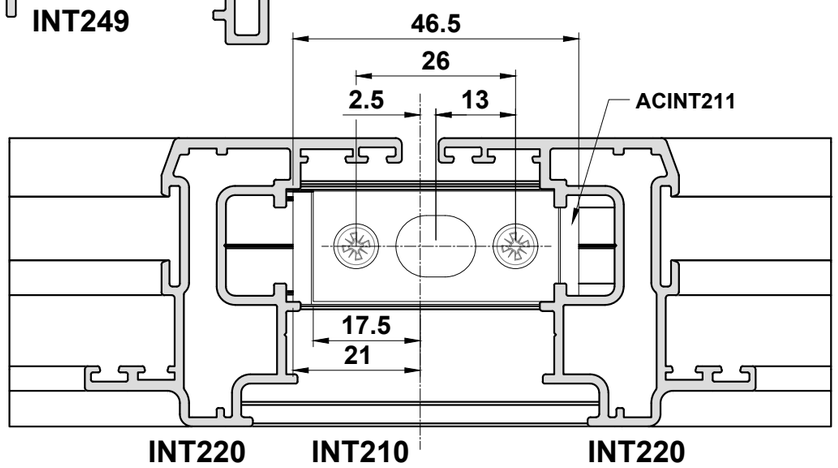

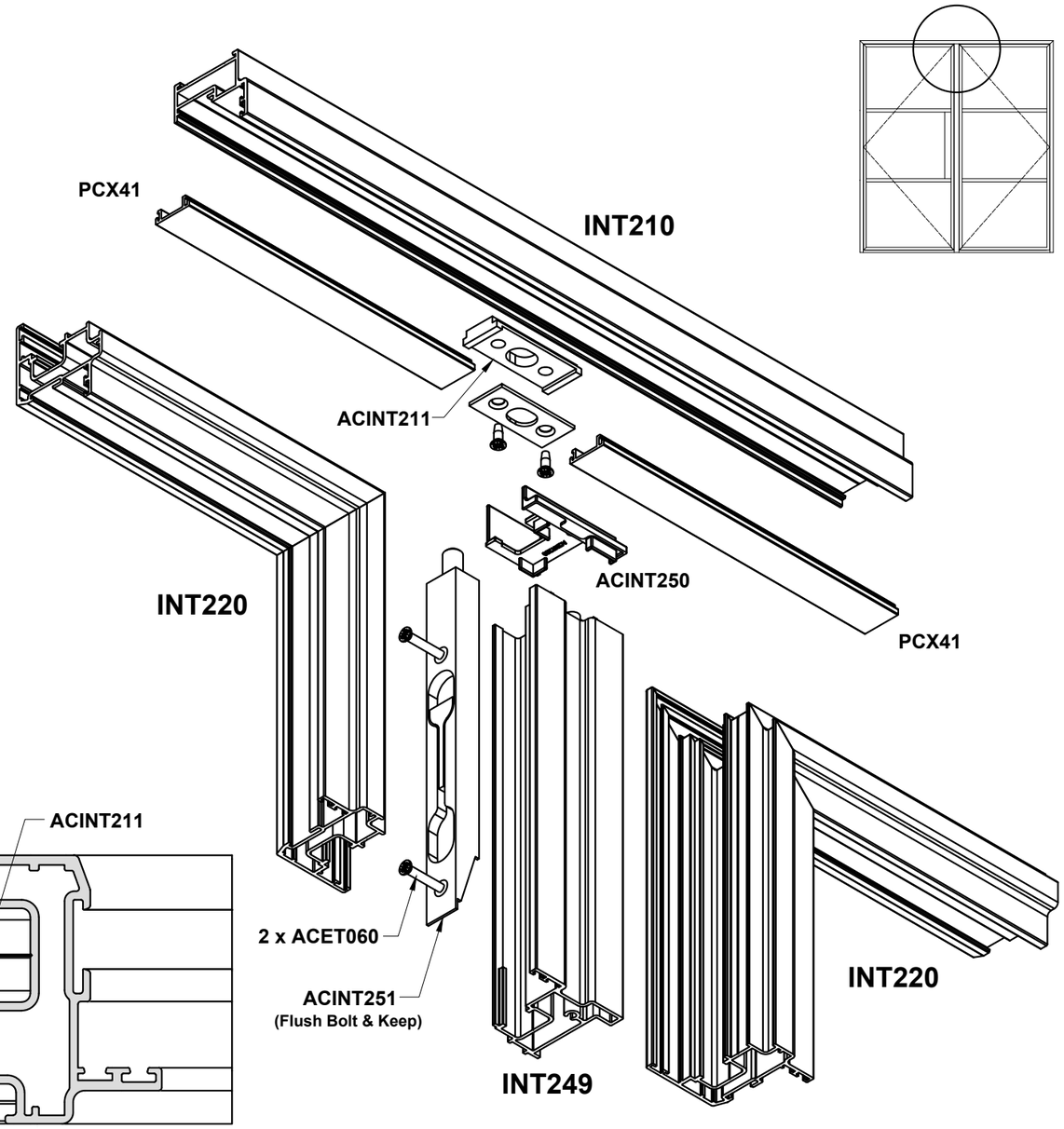

Do Not Scale From This Drawing

Sliding Door - Roller Fixing

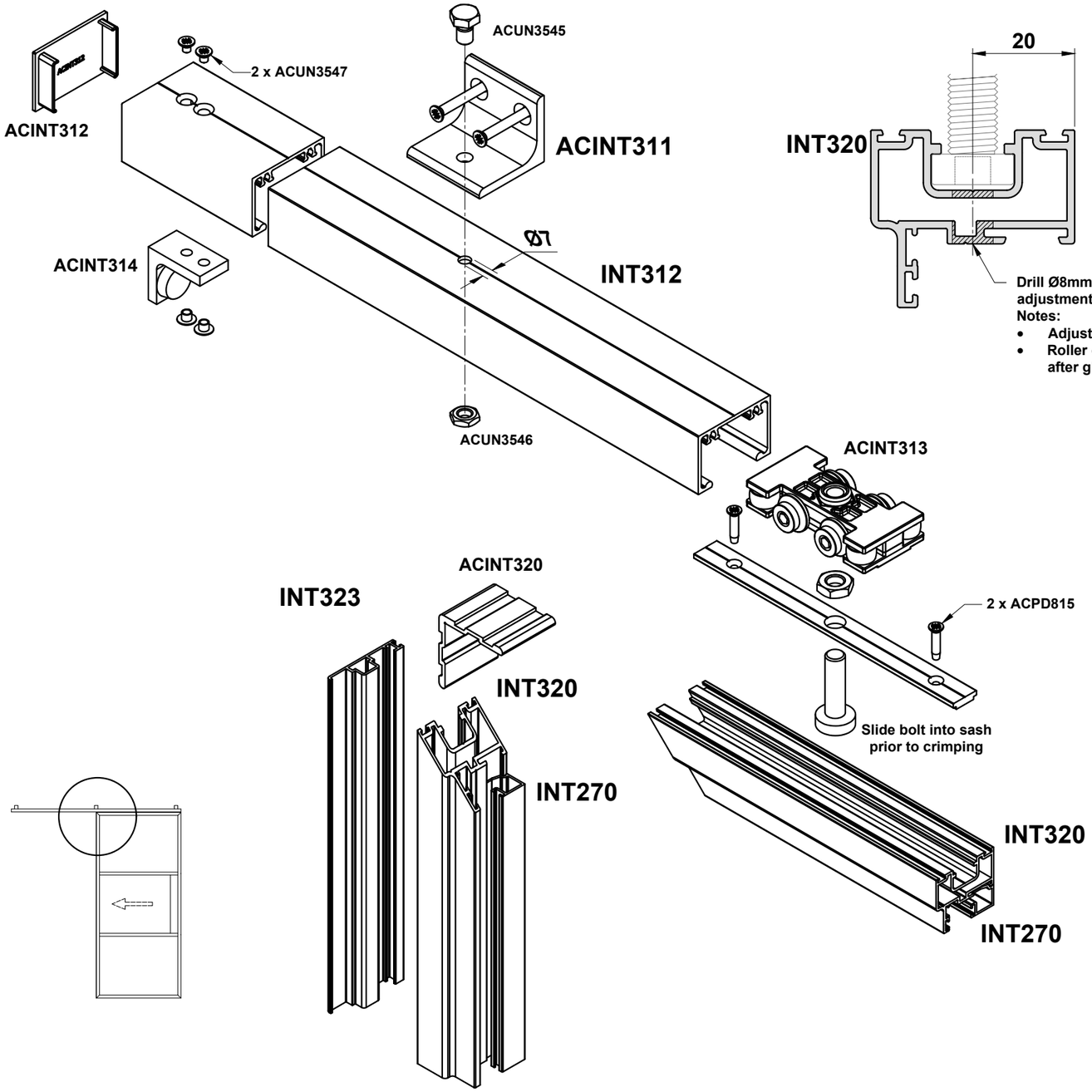

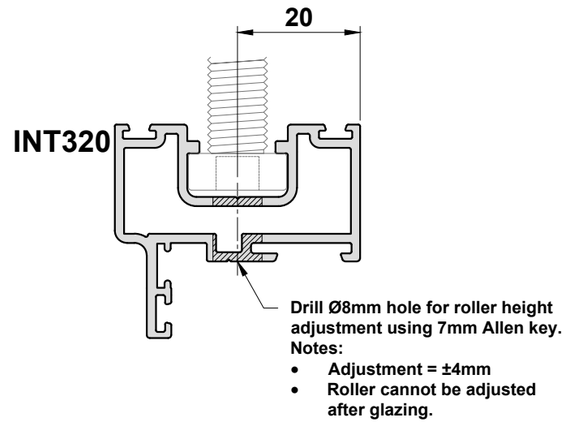

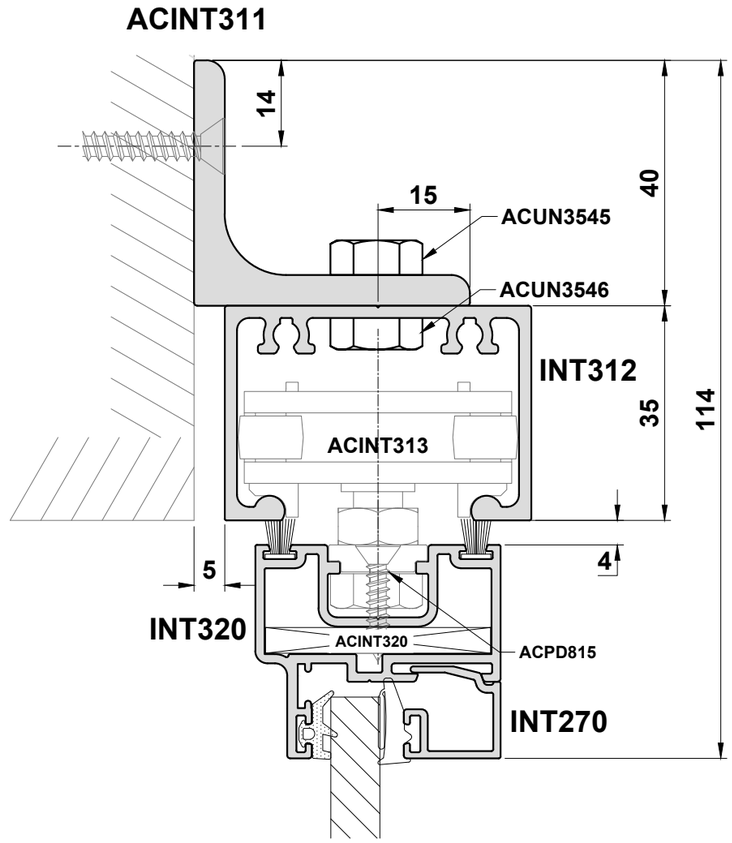

INT312 Preparation

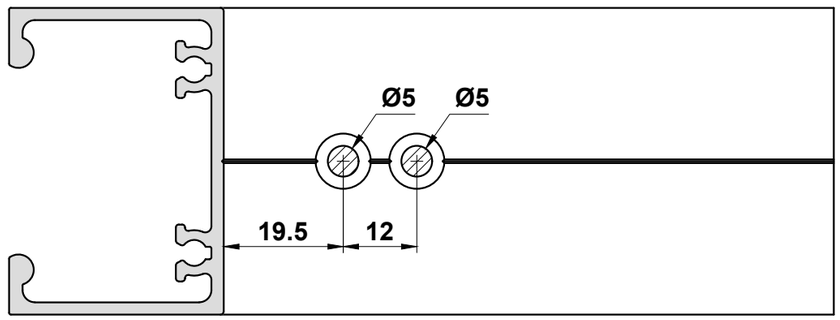

Do Not Scale From This Drawing

Pivot Door - ACSIN201 Preparation & Fixing (Top Detail)

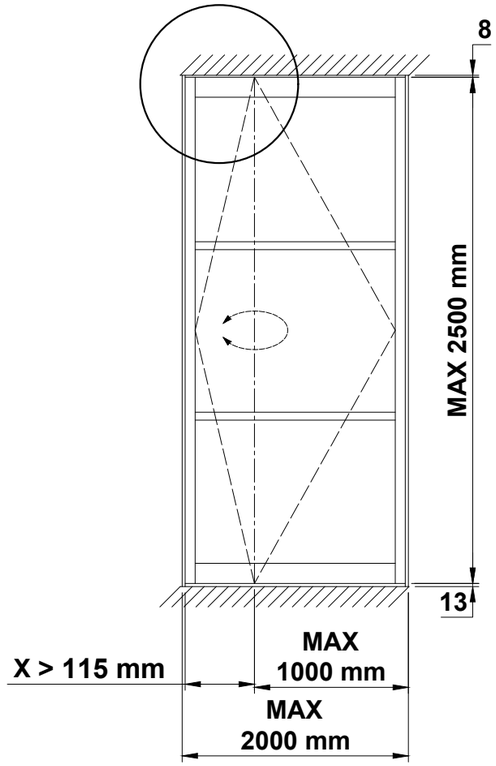

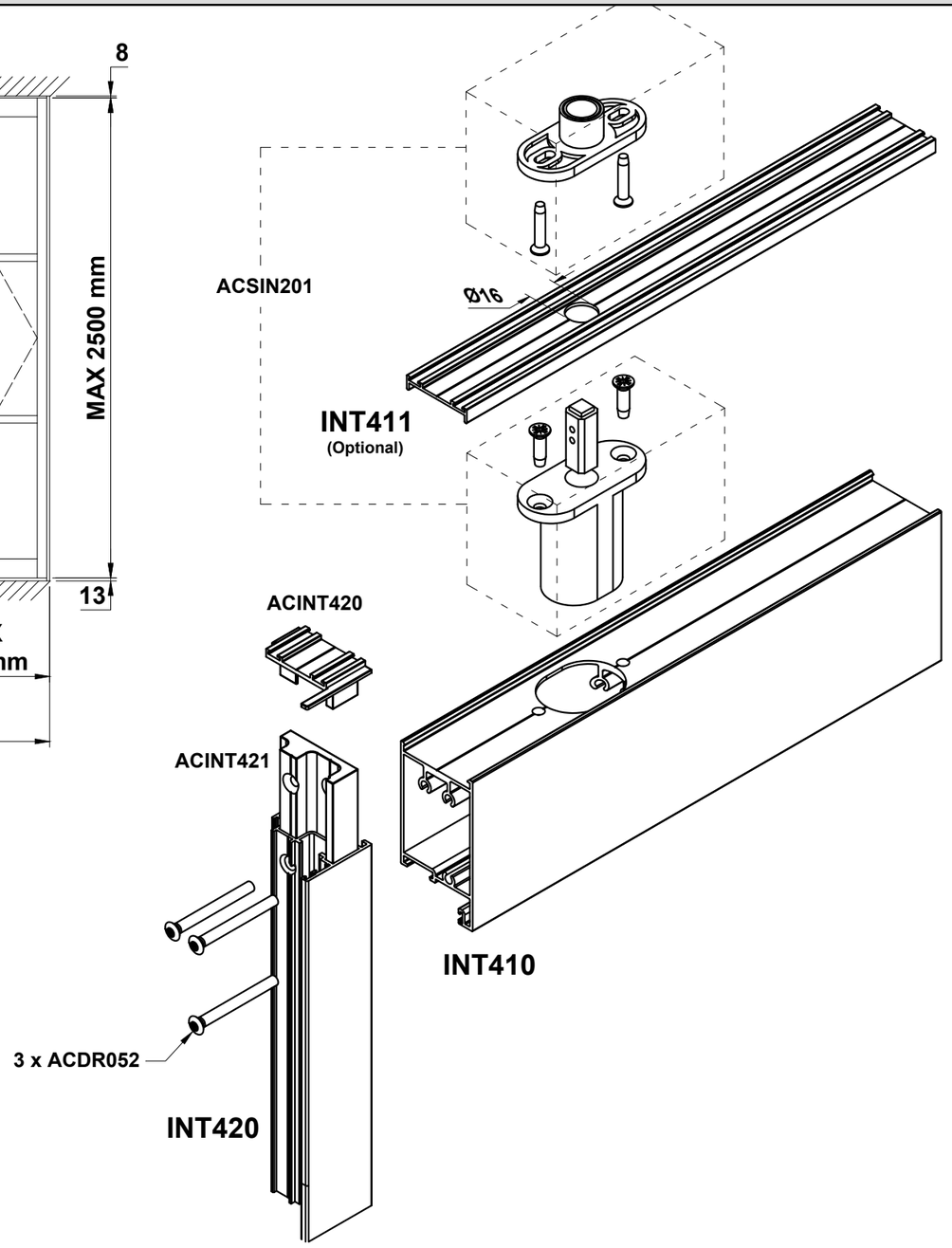

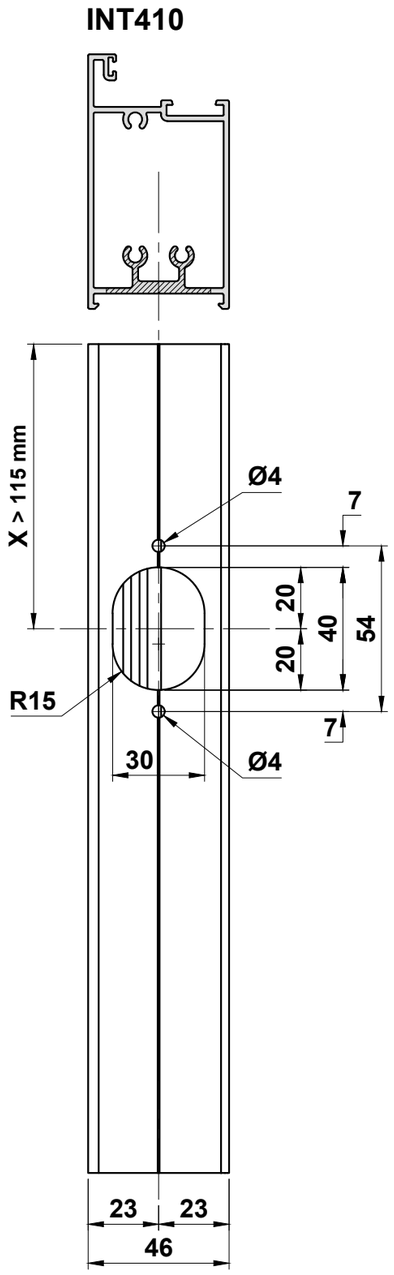

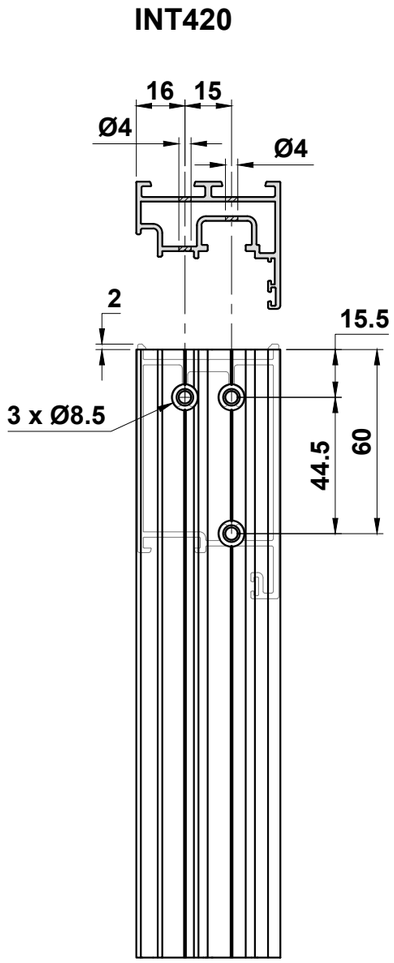

Do Not Scale From This Drawing

Pivot Door - ACSIN201 Preparation & Fixing (Bottom Detail)

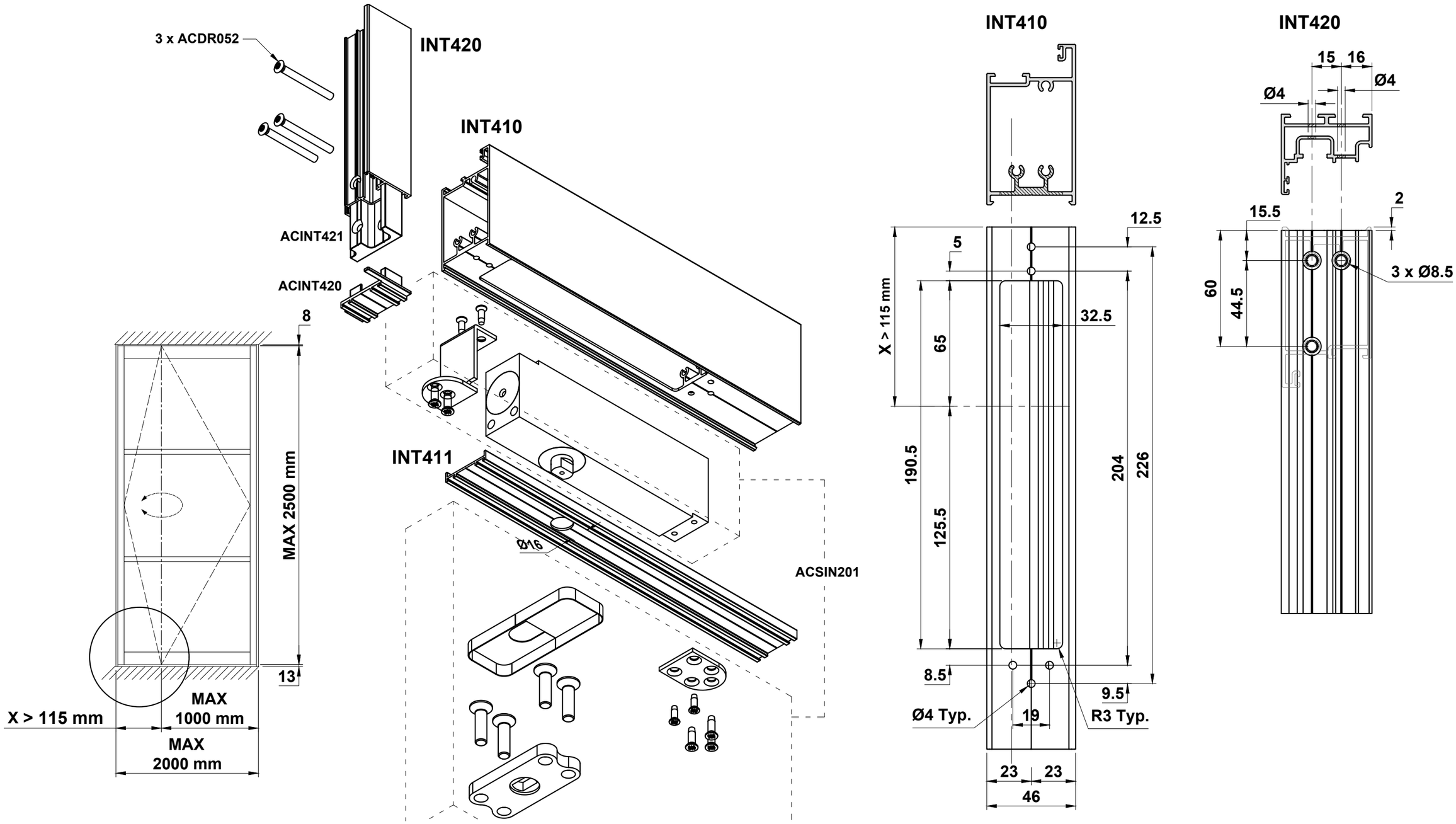

Do Not Scale From This Drawing

Glazing Details - Fixed Screens, Hinged & Sliding Doors

6mm Glazing

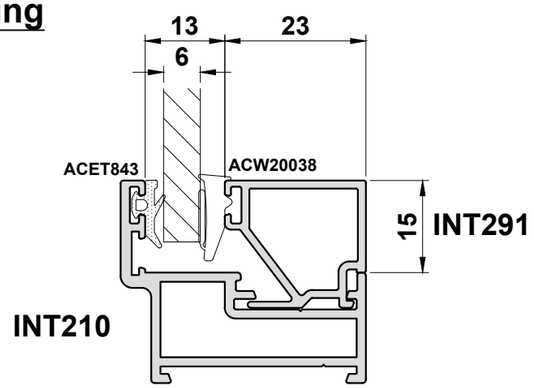

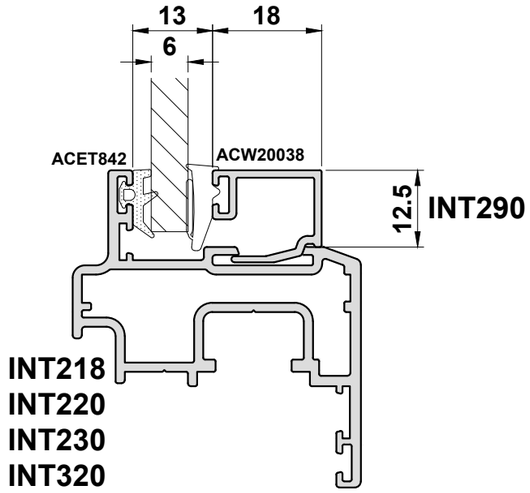

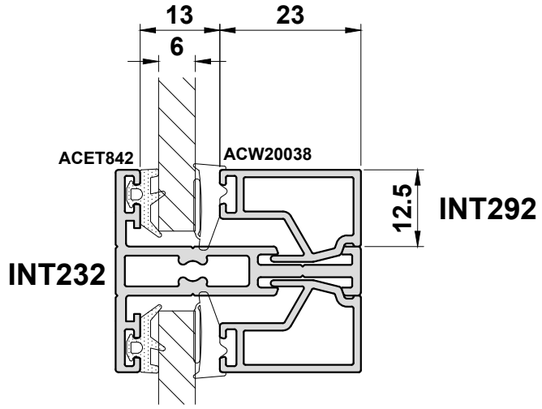

8mm Glazing

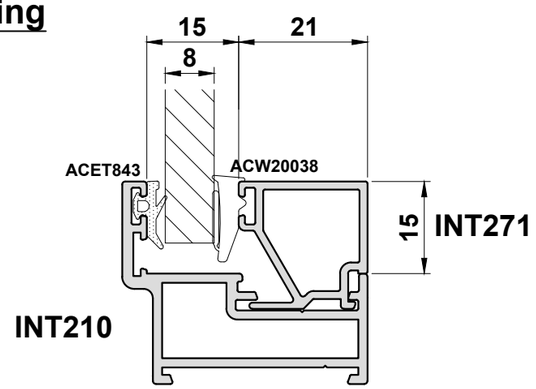

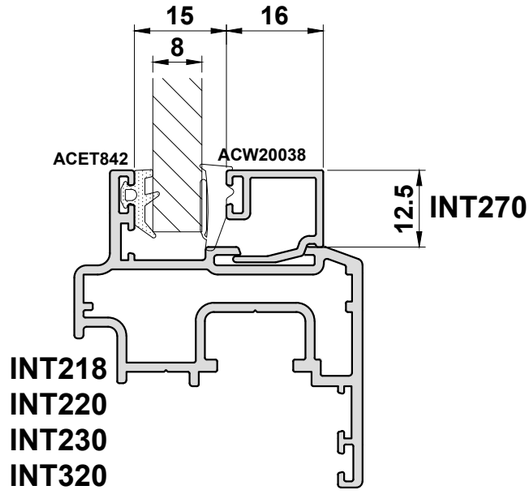

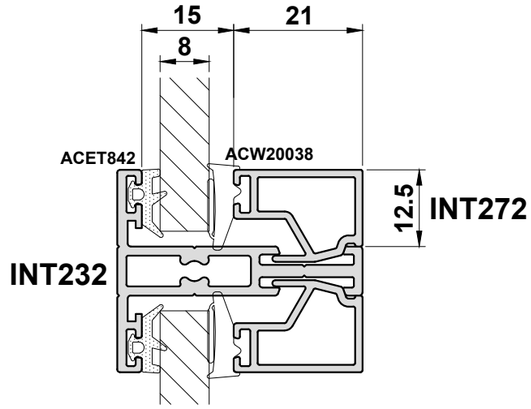

18mm Glazing

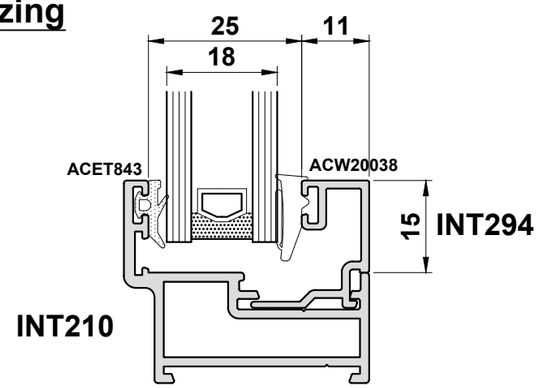

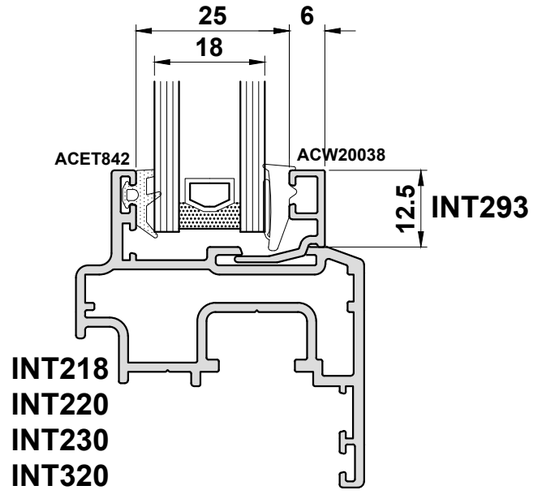

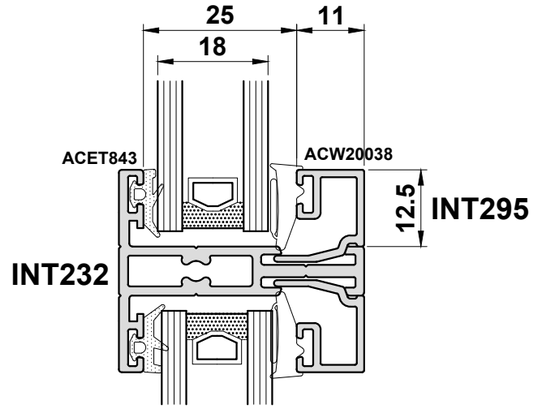

Do Not Scale From This Drawing

Glazing Details - Pivot Doors

6mm Glazing

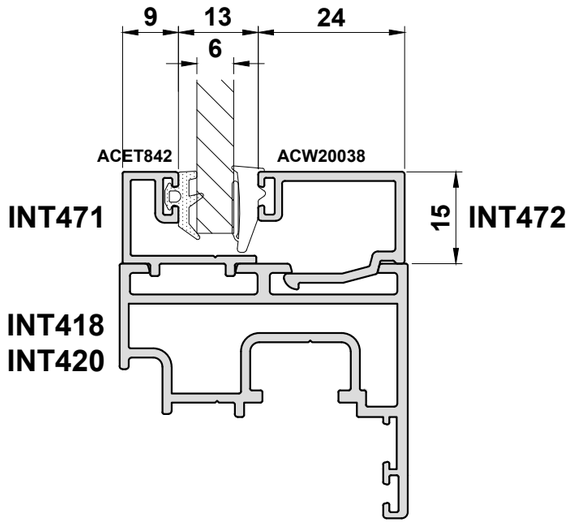

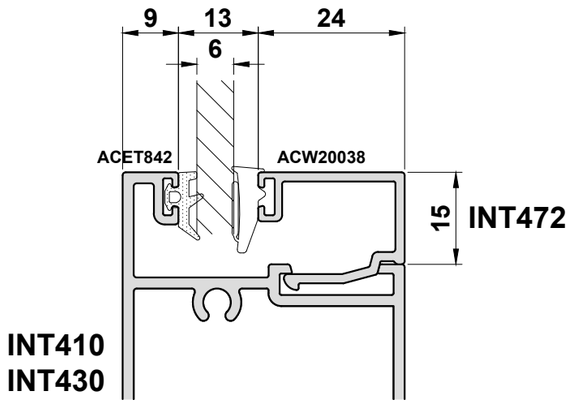

8mm Glazing

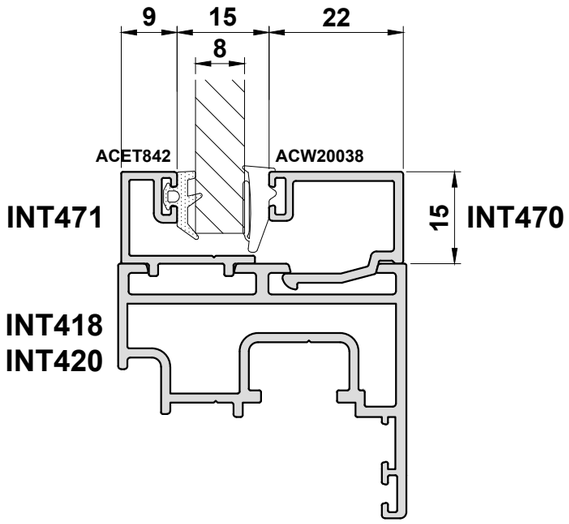

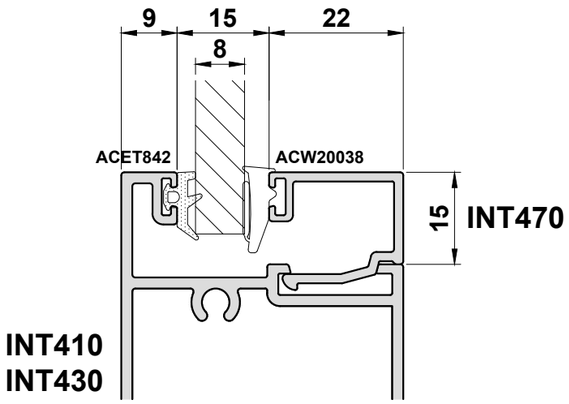

18mm Glazing

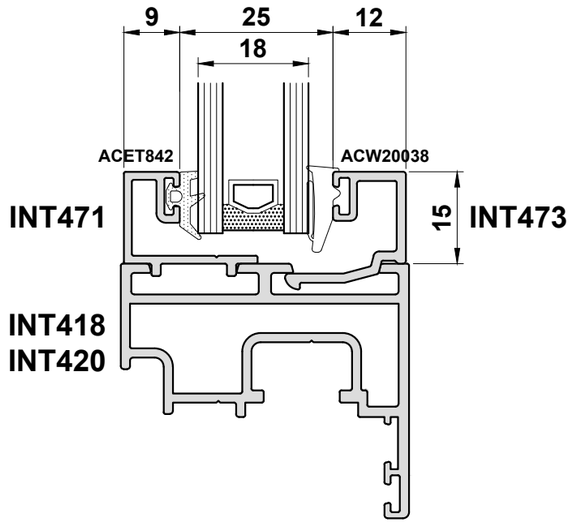

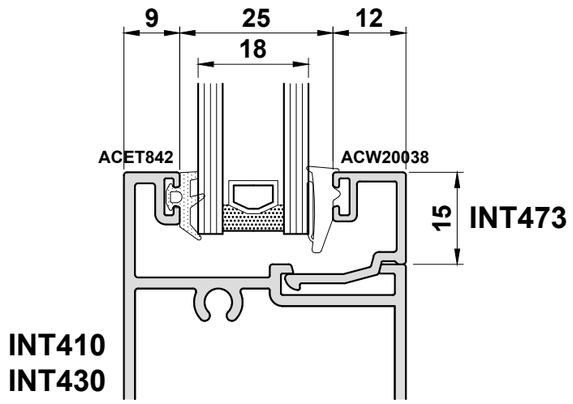

Do Not Scale From This Drawing

Section F

F INT

Sawing Tables

Fixed Screen..... F03
Hinged Door..... F04 - F08
Sliding Door..... F09 - F12
Pivot Door..... F13

Section F

Cutting Information - Fixed Screen

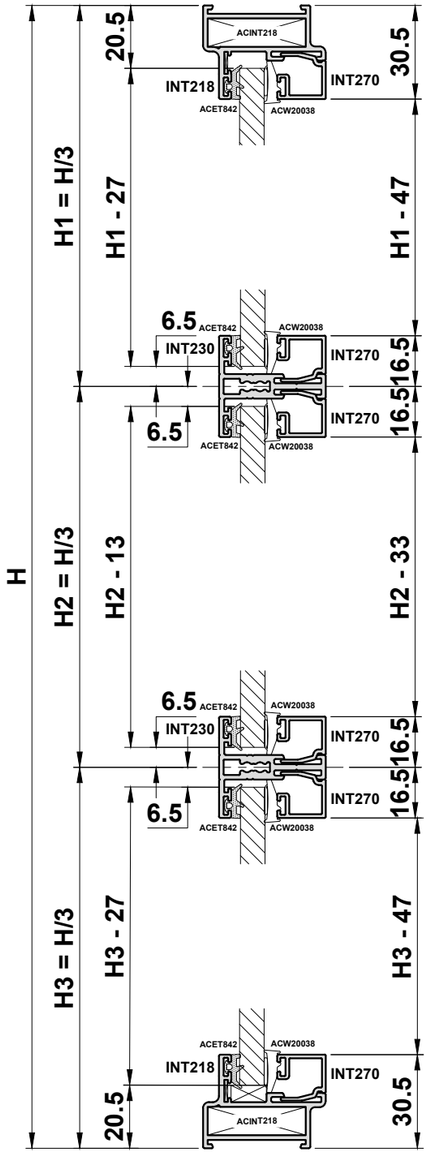

Profile Cutting Schedule				
INT218	4			W/2 - 3
INT218	4			H
INT230	4			W/2 - 39
INT255	1			H
INT270	12			W2 - 39
INT270	4			H3 - 47
INT270	4			H2 - 33
INT270	4			H1 - 47

Accessories		
ACET045	Chevrons	8
ACET060	Screws	300mm centres
ACET066	Screws	8
ACET067	Screws	16
ACET842	E Gasket	12(W/2-44) + 4(H-41)
ACINT218	Outer Frame Cleats	8
ACINT230	Transom Brackets	8
ACUN3547	M4 Connecting Screws	8
ACW20038	Wedge Gasket	12(W/2-44) + 4(H-41)

Glass		
G1	2	W/2 - 44 X H1 - 27
G2	2	W/2 - 44 X H2 - 13
G3	2	W/2 - 44 X H3 - 27

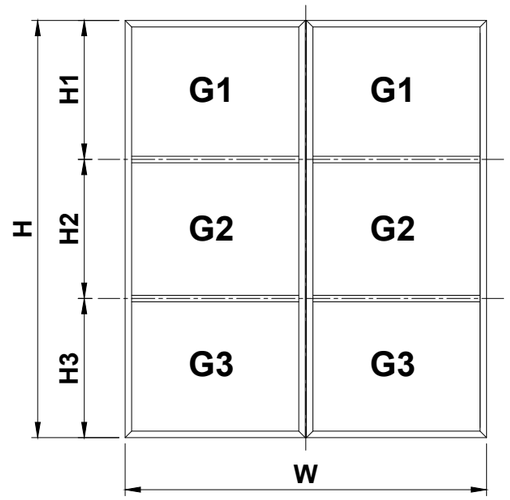

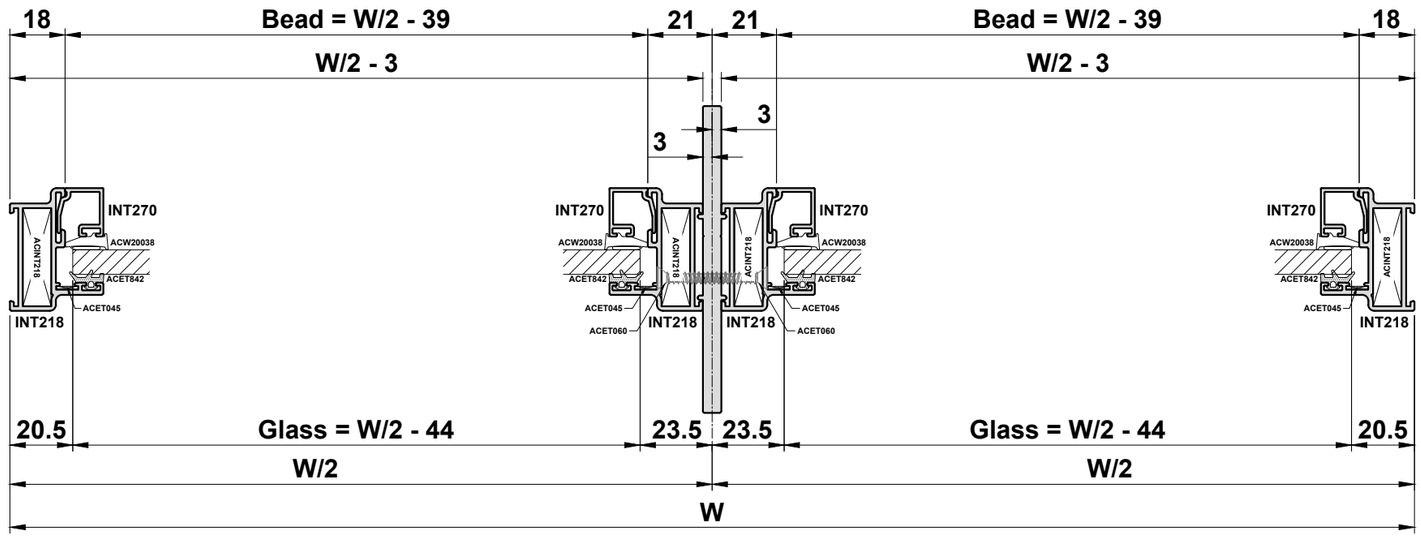

Do Not Scale From This Drawing

Cutting Information - Open In Single Door

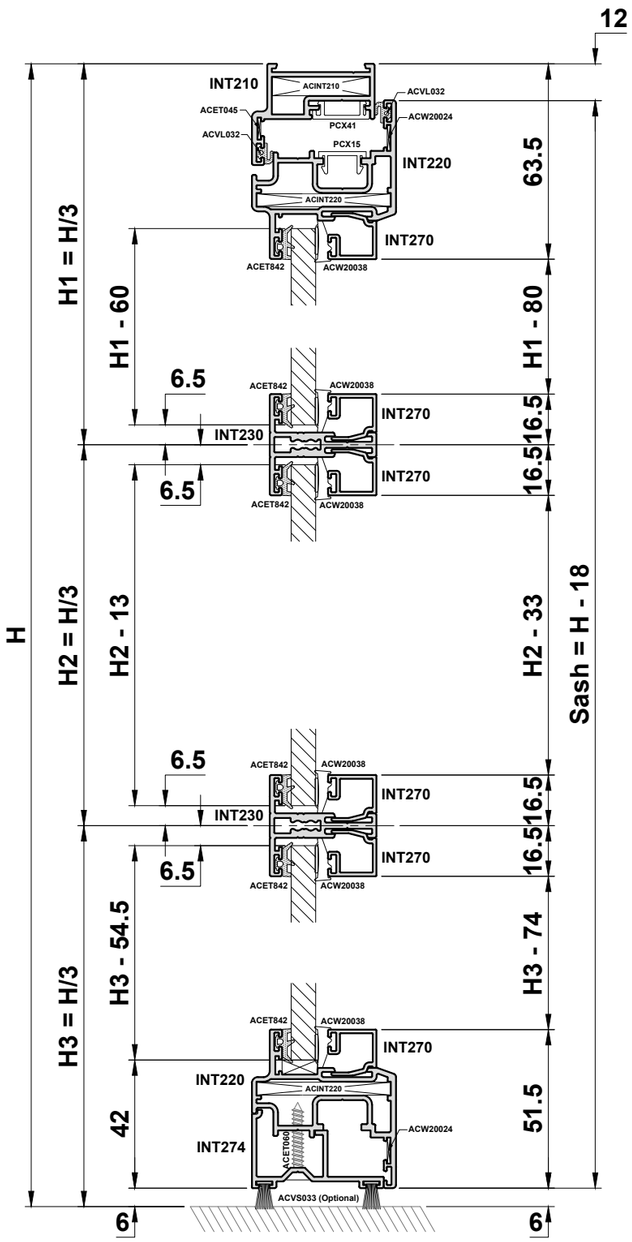

Profile Cutting Schedule				
INT210	1			W
INT210	2			H
INT220	2			W - 24
INT220	2			H - 18
INT230	2			W - 102
INT238	1			H2 - 8
INT270	4			W - 102
INT270	2			W - 187
INT270	2			H3 - 74
INT270	2			H2 - 33
INT270	2			H1 - 80
INT274	1			W - 61
PCX15	1			W - 72
PCX15	2			H - 55.5
PCX41	1			W - 36
PCX41	2			H - 12

Accessories		
ACET045	Chevrons	2
ACET060	Screws	300mm centres
ACET066	Screws	6
ACET067	Screws	8
ACET842	E Gasket	6(W-107) + 2(H-101.5)
ACINT210	Outer Frame Cleats	2
ACINT220	Sash Cleats	4
ACINT221	Hinge Kit	3
ACINT230	Transom Bracket	4
ACINT237/238	Magnetic Sash Lock	1
ACINT239	Forend Cover	1
ACINT240	Striker Cover Plate	1
ACINT241	Latch Cover Tray with magnet	1
ACINT274	End Cap	Pair
ACINT5__	Lever Handle (*)	Pair
ACUN3547	M4 Connecting Screws	4
ACVL032	Outer Frame Seal	1(W-58) + 2(H-29)
ACVL032	Sash Seal	2(W-32) + 2(H-18)
ACVS033	Woolpile (**)	2(W-61)
ACW20024	Chevrons	4
ACW20038	Wedge Gasket	6(W-107) + 2(H-101.5)

(*) See Section B for handle options.
(**) Optional

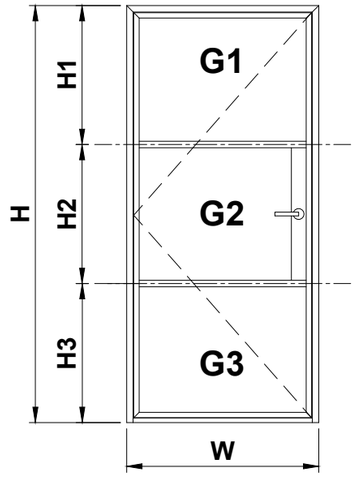

Glass		
G1	1	W - 107 X H1 - 60
G2	1	W - 192 X H2 - 13
G3	1	W - 107 X H3 - 54.5

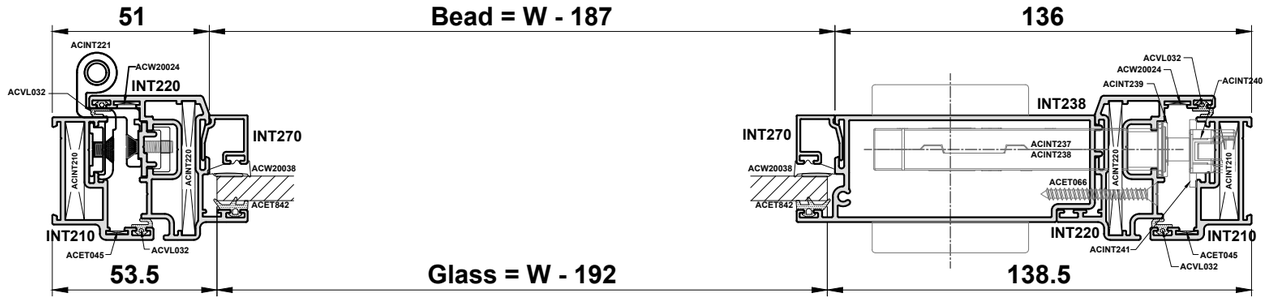

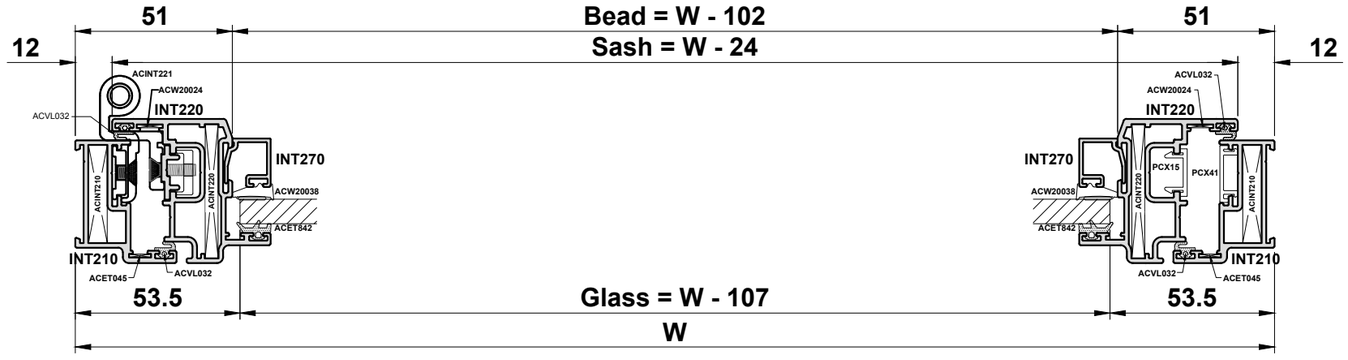

Do Not Scale From This Drawing

Cutting Information - Open In Single Door with Deep Bottom Rail

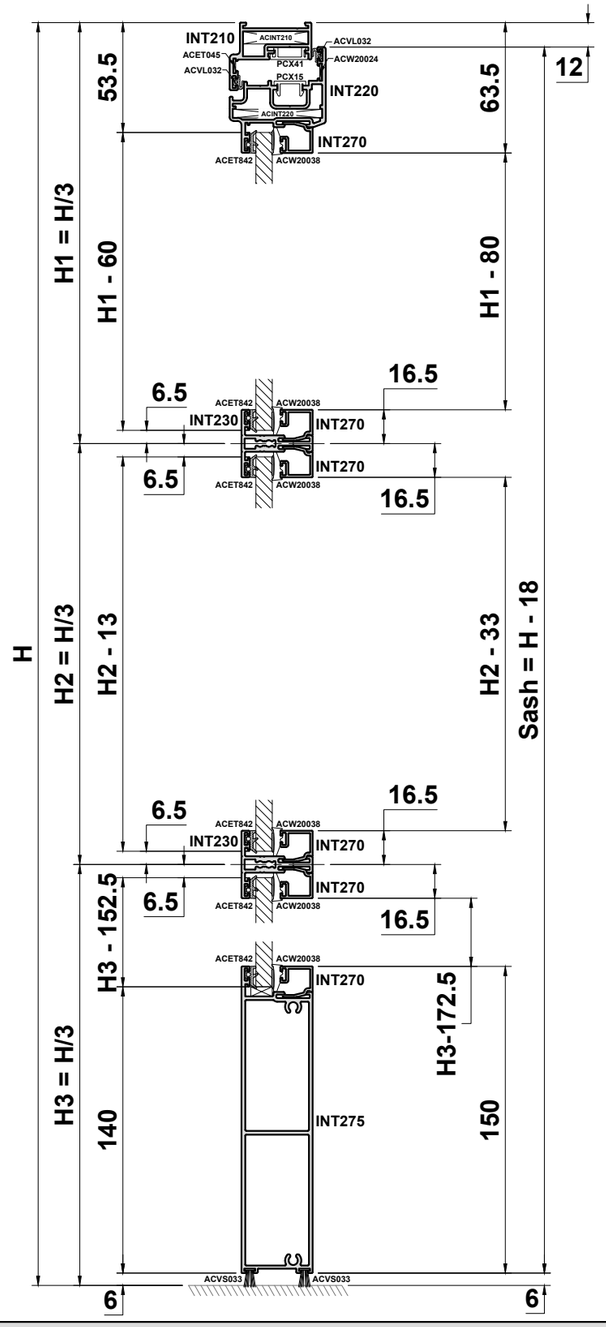

Profile Cutting Schedule				
INT210	1			W
INT210	2			H
INT220	1			W - 24
INT220	2			H - 22
INT230	2			W - 102
INT238	1			H2 - 8
INT270	4			W - 102
INT270	2			W - 187
INT270	2			H3 - 172.5
INT270	2			H2 - 33
INT270	2			H1 - 80
INT275	1			W - 102
PCX15	1			W - 72
PCX15	2			H - 28.5
PCX41	1			W - 36
PCX41	2			H - 12

Accessories		
ACET045	Chevrons	2
ACET062	Screws	4
ACET066	Screws	6
ACET067	Screws	8
ACET842	E Gasket	6(W-107) + 2(H-199.5)
ACINT210	Outer Frame Cleats	2
ACINT220	Sash Cleats	2
ACINT221	Hinge Kit	3
ACINT223	End Cap	1 Pair
ACINT224	Block	2
ACINT230	Transom Bracket	4
ACINT237/238	Magnetic Sash Lock	1
ACINT239	Forend Cover	1
ACINT240	Striker Cover Plate	1
ACINT241	Latch Cover Tray with magnet	1
ACINT5__	Lever Handle (*)	Pair
ACUN3547	M4 Connecting Screws	4
ACVL032	Outer Frame Seal	1(W-58) + 2(H-29)
ACVL032	Sash Seal	1(W-32) + 2(H-18)
ACVS033	Woolpile	2(W-102)
ACW20024	Chevrons	2
ACW20038	Wedge Gasket	6(W-107) + 2(H-199.5)

(*) See Section B for handle options.

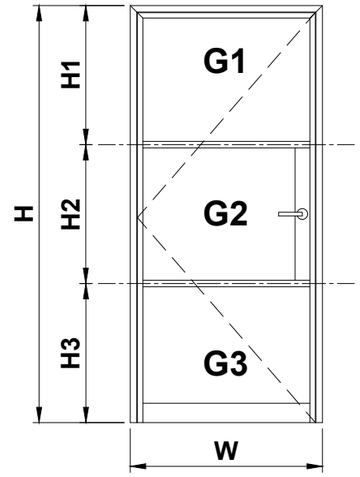

Glass		
G1	1	W - 107 X H1 - 60
G2	1	W - 192 X H2 - 13
G3	1	W - 107 X H3 - 152.5

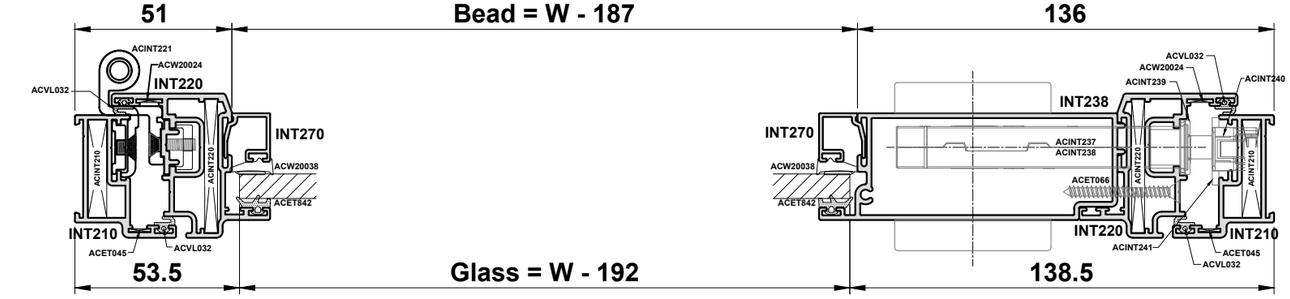

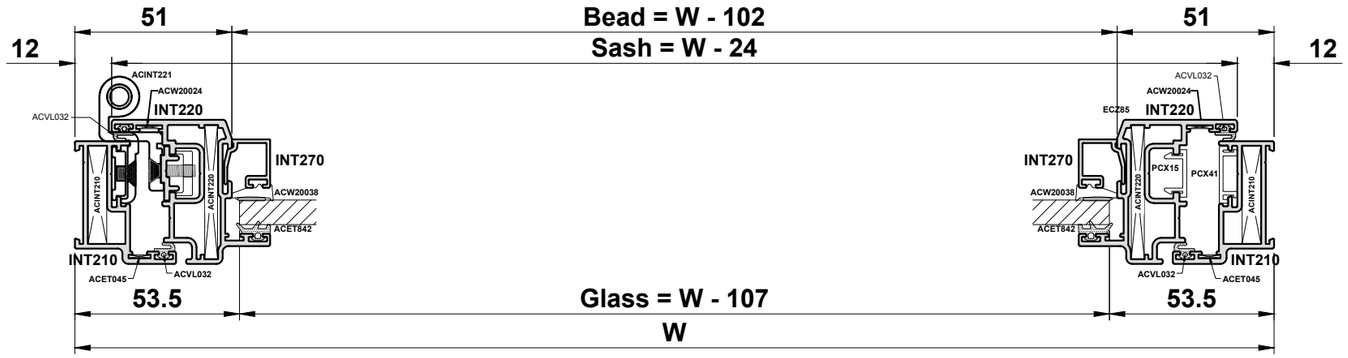

Do Not Scale From This Drawing

Cutting Information - Open In Single Door & Fixed Screen

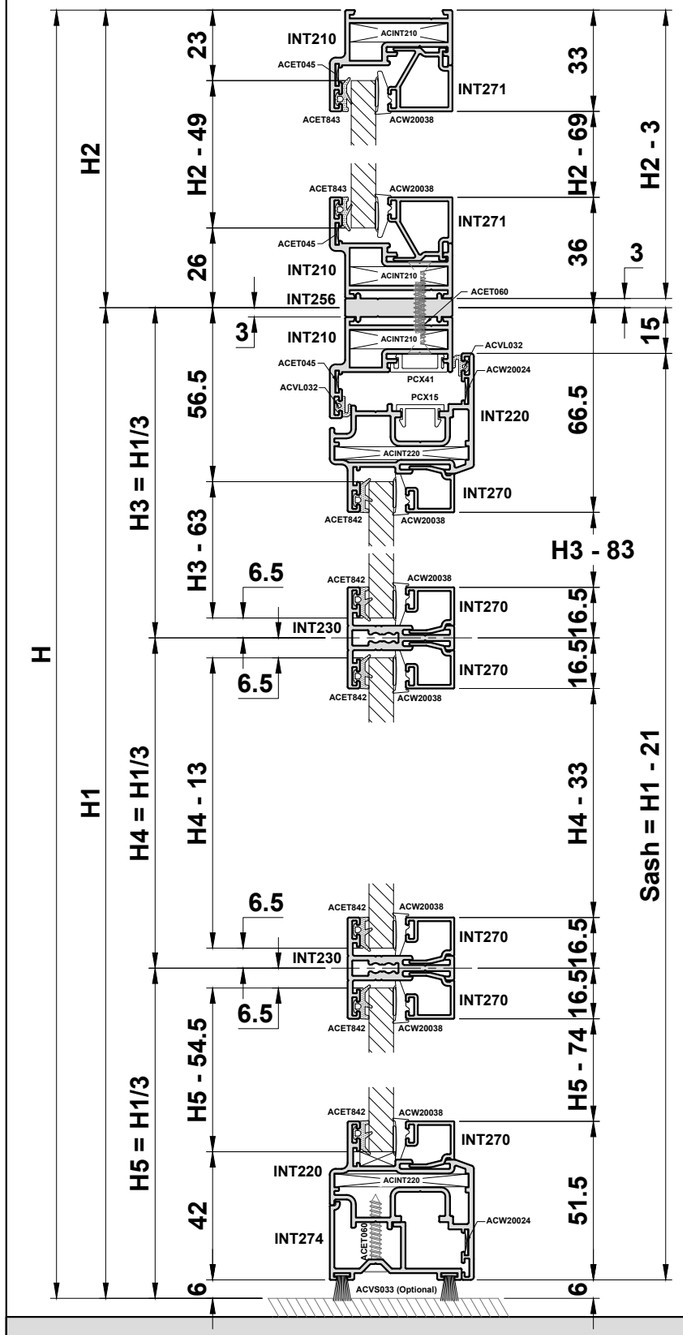

Profile Cutting Schedule				
INT210	3			W
INT210	2			H1 - 3
INT210	2			H2 - 3
INT220	2			W - 24
INT220	2			H1 - 21
INT230	2			W - 102
INT238	1			H4 -8
INT256	1			W
INT270	4			W - 102
INT270	2			W - 187
INT270	2			H5 - 74
INT270	2			H4 - 33
INT270	2			H3 - 83
INT271	2			W - 36
INT271	2			H2 - 69
INT274	1			W - 61
PCX15	1			W - 72
PCX15	2			H1 - 52.5
PCX41	1			W - 36
PCX41	2			H1 - 15

Accessories		
ACET045	Chevrons	6
ACET060	Screws	300mm centres
ACET066	Screws	6
ACET067	Screws	8
ACET842	E Gasket	6(W-107) + 2(H1-104.5)
ACET843	E Gasket	2(W-46) + 2(H2-49)
ACINT210	Outer Frame Cleats	6
ACINT220	Sash Cleats	4
ACINT221	Hinge Kit	3
ACINT230	Transom Bracket	4
ACINT237/238	Magnetic Sash Lock	1
ACINT239	Forend Cover	1
ACINT240	Striker Cover Plate	1
ACINT241	Latch Cover Tray with magnet	1
ACINT274	End Cap	Pair
ACINT5__	Lever Handle (*)	Pair
ACUN3547	M4 Connecting Screws	4
ACVL032	Outer Frame Seal	1(W-58) + 2(H1-32)
ACVL032	Sash Seal	2(W-32) + 2(H1-21)
ACVS033	Woolpile	2(W-61)
ACW20024	Chevrons	4
ACW20038	Wedge Gasket	6(W-107) + 2(H1-104.5)
ACW20038	Wedge Gasket	2(W-46) + 2(H2-49)

(*) See Section B for handle options.

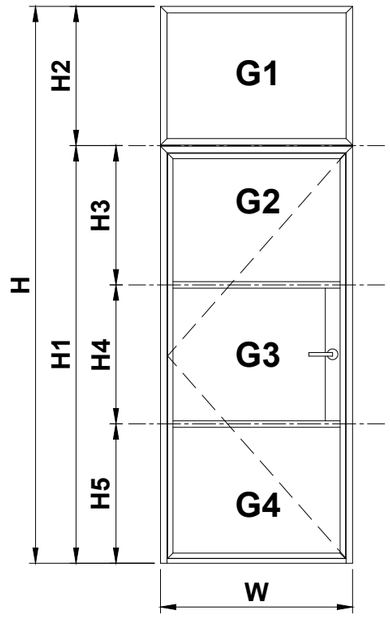

Glass		
G1	1	W - 46 X H2 - 49
G2	1	W - 107 X H3 - 63
G3	1	W - 192 X H4 - 13
G4	1	W - 107 X H5 - 54.5

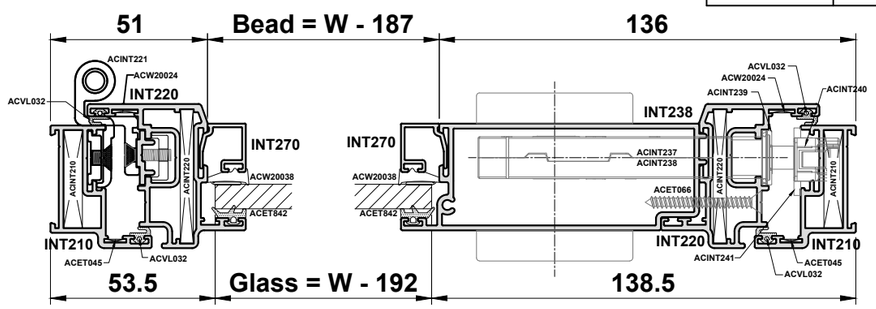

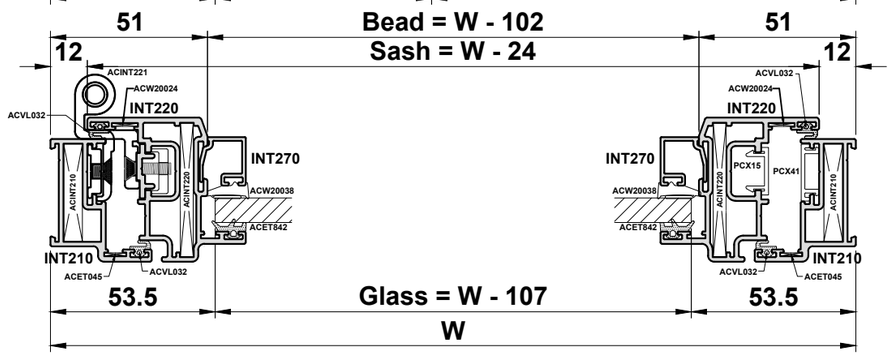

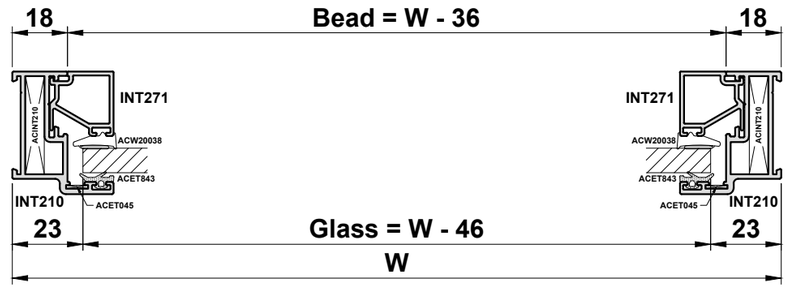

Do Not Scale From This Drawing

Cutting Information - Open In Single Door & Fixed Screen

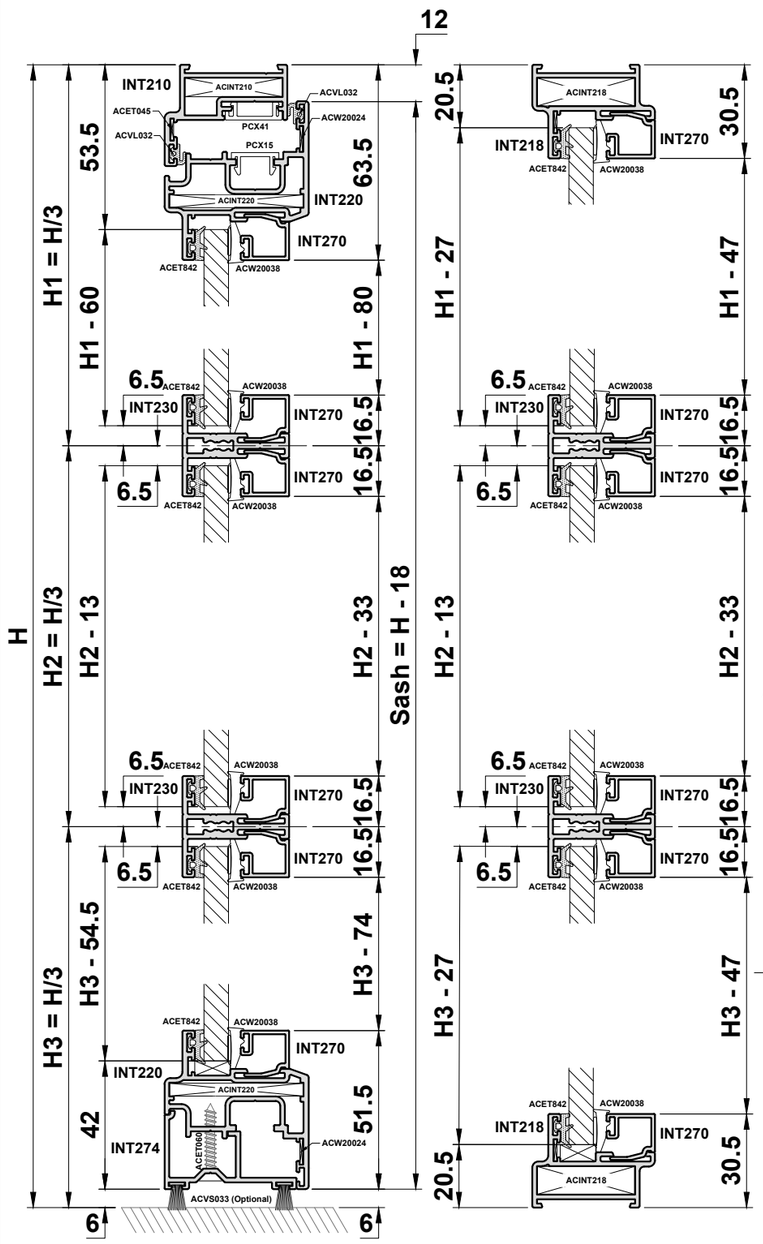

Profile Cutting Schedule		
INT210	1	W1 - 3
INT210	2	H
INT218	2	W2 - 3
INT218	2	H
INT220	2	W1 - 27
INT220	2	H - 18
INT230	2	W1 - 105
INT230	2	W2 - 39
INT238	1	H2 - 8
INT255	1	H
INT270	4	W1 - 105
INT270	2	W1 - 190
INT270	6	W2 - 39
INT270	2	H3 - 74
INT270	4	H2 - 33
INT270	2	H1 - 80
INT270	2	H3 - 47
INT270	2	H1 - 47
INT274	1	W1 - 64
PCX15	1	W1 - 75
PCX15	2	H - 55.5
PCX41	1	W1 - 39
PCX41	2	H - 12

Accessories		
ACET045	Chevrons	6
ACET060	Screws	300mm centres
ACET066	Screws	10
ACET067	Screws	16
ACET842	E Gasket	6(W1-110) + 2(H-101.5)
ACET842	E Gasket	6(W2-44) + 2(H-41)
ACINT210	Outer Frame Cleats	2
ACINT218	Outer Frame Cleats	4
ACINT220	Sash Cleats	4
ACINT221	Hinge Kit	3
ACINT230	Transom Brackets	6
ACINT237/238	Magnetic Sash Lock	1
ACINT239	Forend Cover	1
ACINT240	Striker Cover Plate	1
ACINT241	Latch Cover Tray with magnet	1
ACINT274	End Cap	Pair
ACINT5__	Lever Handle (*)	Pair
ACUN3547	M4 Connecting Screws	6
ACVL032	Outer Frame Seal	1(W/2-61) + 2(H-29)
ACVL032	Sash Seal	2(W/2-35) + 2(H-18)
ACVS033	Woolpile	2(W1-64)
ACW20024	Chevrons	4
ACW20038	Wedge Gasket	6(W1-110) + 2(H-101.5)
ACW20038	Wedge Gasket	6(W2-44) + 2(H-41)

(*) See Section B for handle options.

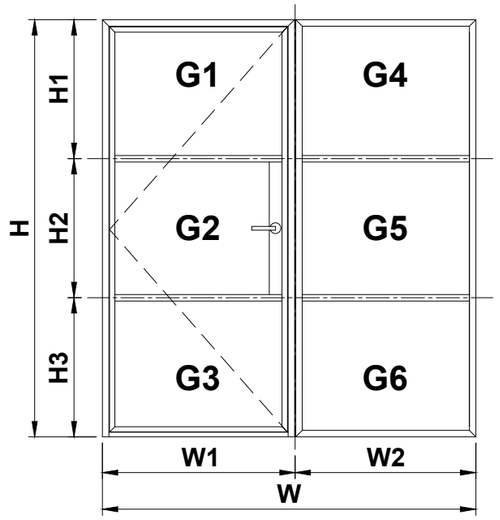

Glass		
G1	1	W1 - 110 X H1 - 60
G2	1	W1 - 195 X H2 - 13
G3	1	W1 - 110 X H3 - 54.5
G4	1	W2 - 44 X H1 - 27
G5	1	W2 - 44 X H2 - 13
G6	1	W2 - 44 X H3 - 27

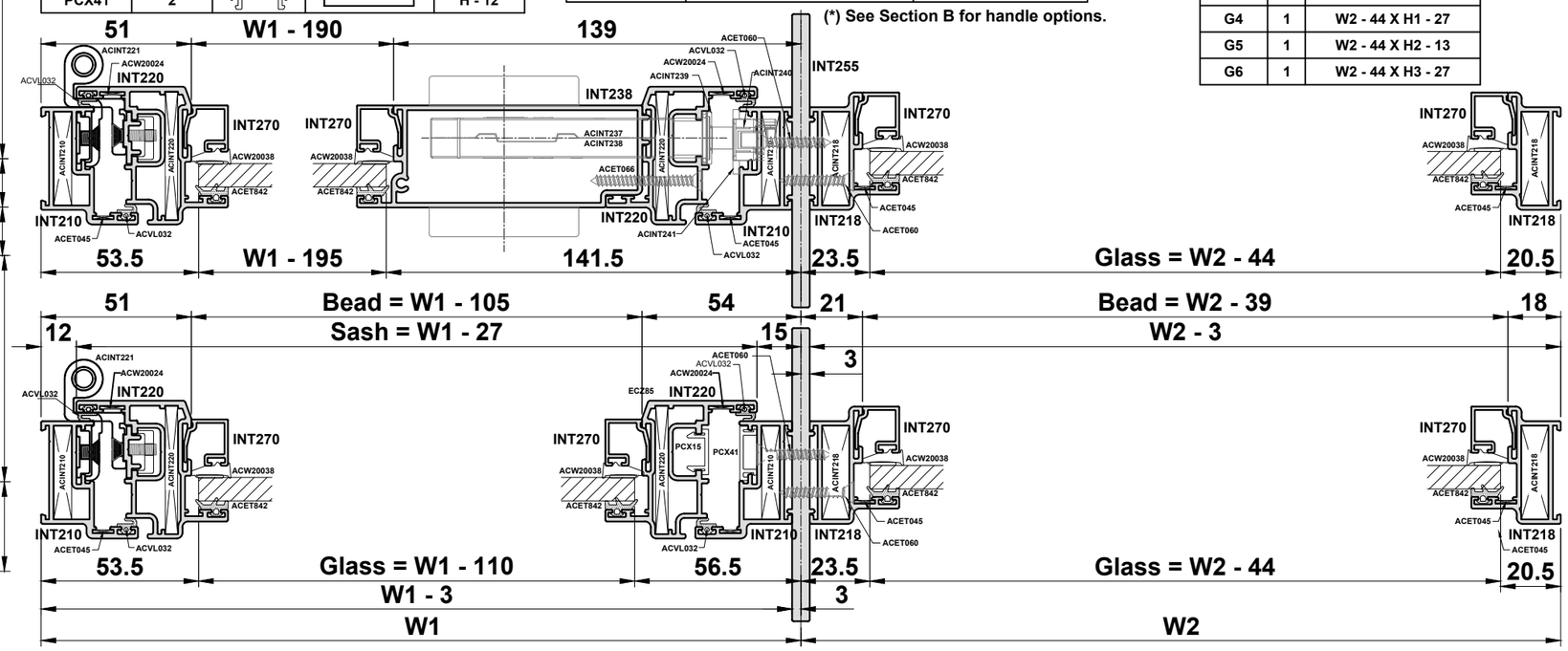

Do Not Scale From This Drawing

Cutting Information - Open In Double Door

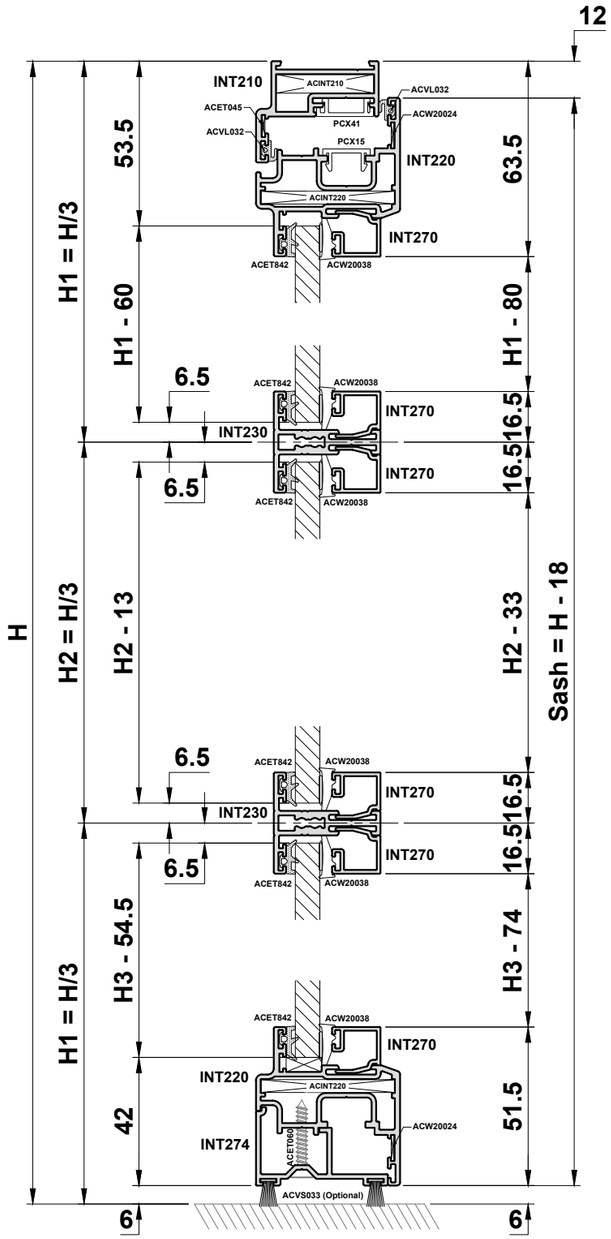

Profile Cutting Schedule				
INT210	1			W
INT210	2			H
INT220	4			W/2 - 15
INT220	4			H - 18
INT230	4			W/2 - 93
INT238	1			H2 - 8
INT249	1			H - 40.5
INT270	10			W/2 - 93
INT270	2			W/2 - 178
INT270	4			H3 - 74
INT270	4			H2 - 33
INT270	4			H1 - 80
INT274	2			W/2 - 52
PCX15	2			W/2 - 63
PCX15	3			H - 55.5
PCX41	1			W - 36
PCX41	2			H - 12

(*) See Section B for flush bolt options.
(**) See Section B for handle options.

Accessories		
ACET045	Chevrons	2
ACET066	Screws	10
ACET067	Screws	16
ACET842	E Gasket	12(W/2-98) + 4(H-101.5)
ACINT210	Outer Frame Cleats	2
ACINT211	Packer	1
ACINT220	Sash Cleats	8
ACINT221	Hinge Kit	6
ACINT230	Transom Brackets	8
ACINT237/238	Magnetic Sash Lock	1
ACINT239	Forend Cover	1
ACINT240	Striker Cover Plate	1
ACINT241	Latch Cover Tray with magnet	1
ACINT249	Bottom End Cap	1
ACINT250	Top End Cap	1
ACINT25_	Flush Bolt (*)	2
ACINT274	End Cap	2 Pairs
ACINT5__	Lever Handle (**)	Pair
ACUN3512	Screws	300mm centres
ACUN3547	M4 Connecting Screws	8
ACVL032	Outer Frame Seal	1(W-58) + 2(H-29)
ACVL032	Sash Seal	4(W/2-23) + 4(H-12)
ACVS033	Woolpile	4(W/2-52)
ACW20024	Chevrons	8
ACW20038	Wedge Gasket	12(W/2-98) + 4(H-101.5)

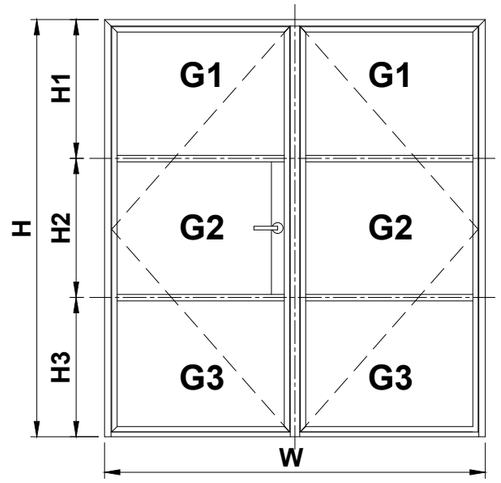

Glass		
G1	2	W/2 - 98 X H1 - 60
G2	2	W/2 - 183 X H2 - 13
G3	2	W/2 - 98 X H3 - 54.5

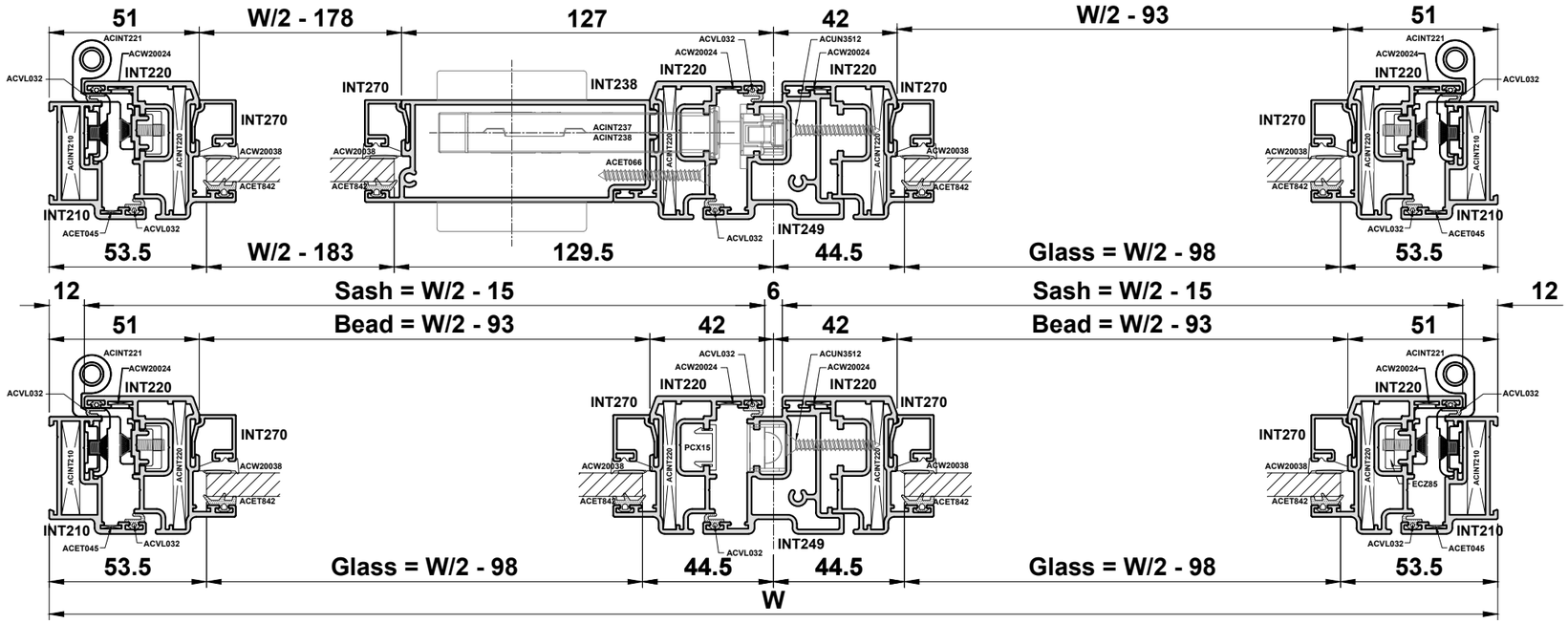

Do Not Scale From This Drawing

ISSUED: DECEMBER 2021

Cutting Information - Single Sliding Door

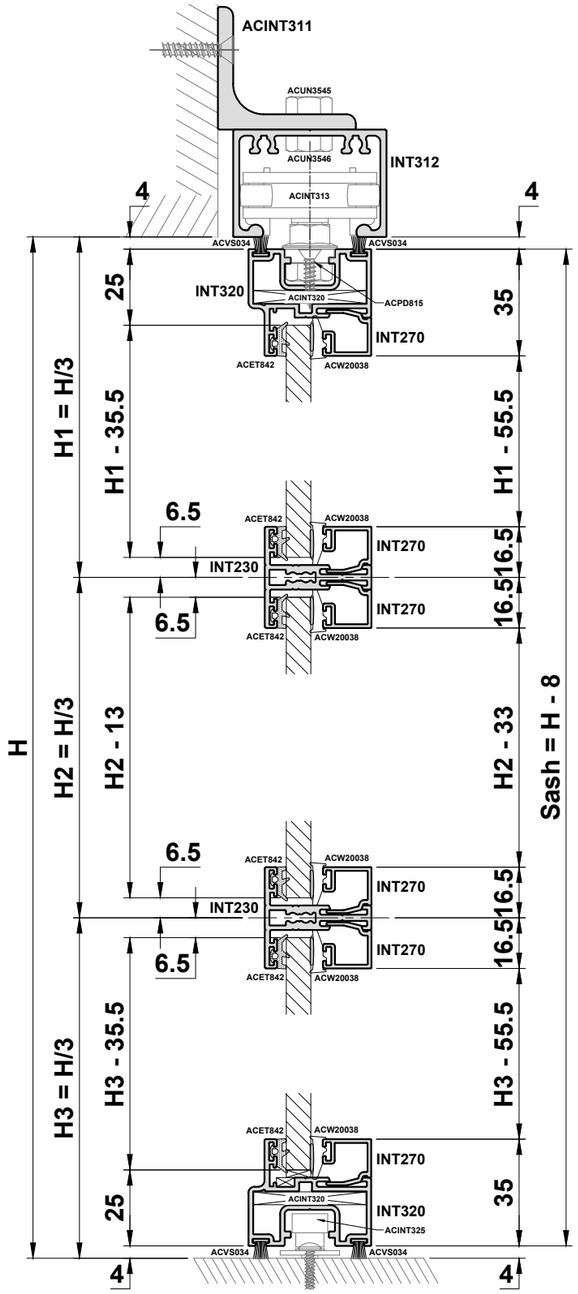

Profile Cutting Schedule		
INT230	2	W - 31
INT238	1	H2 - 8
INT270	4	W - 31
INT270	2	W - 115.5
INT270	2	H1 - 55.5
INT270	2	H2 - 33
INT270	2	H3 - 55.5
INT312	1	2(W + 20)
INT320	2	W + 14
INT320	2	H - 8
INT323	2	H - 8

Accessories		
ACET066	Screws	6
ACET067	Screws	8
ACET842	E Gasket	6(W-36) + 2(H-58)
ACINT230	Transom Bracket	4
ACINT311	Brackets	3
ACINT312	End Cap	1 Pack
ACINT313	Top Carrier Roller	2
ACINT314	Buffer Stop	2
ACINT320	Sash Cleats	4
ACINT325	Bottom Guide	1
ACINT52_	Pull Handle (*)	2
ACPD815	Screws	300mm centres
ACUN3545	M8 Screws	2
ACUN3546	M8 Nuts	2
ACUN3547	M4 Connecting Screws	4
ACVS034	Woolpile	4(W+14) + 2H
ACW20038	Wedge Gasket	6(W-36) + 2(H-58)

(*) See Section B for handle options.

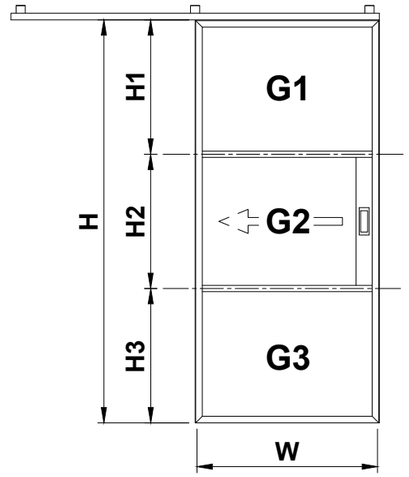

Glass		
G1	1	W - 36 X H1 - 35.5
G2	1	W - 120.5 X H2 - 13
G3	1	W - 36 X H3 - 35.5

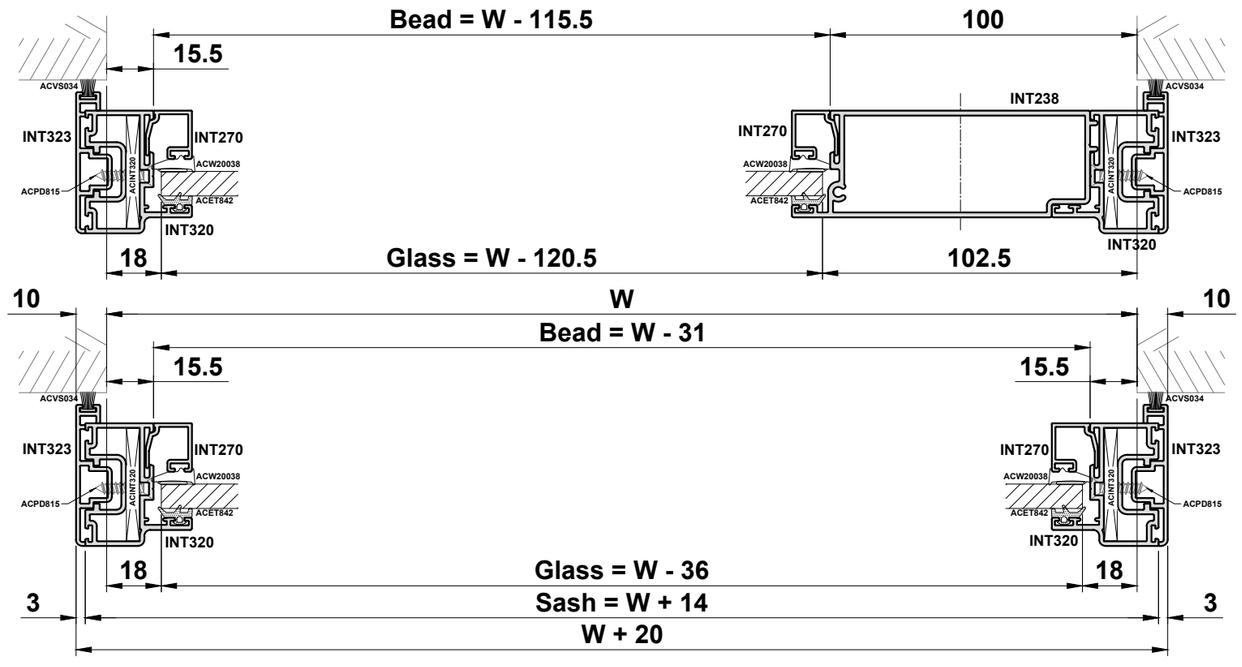

Do Not Scale From This Drawing

Cutting Information - Single Sliding Door & Fixed Screen

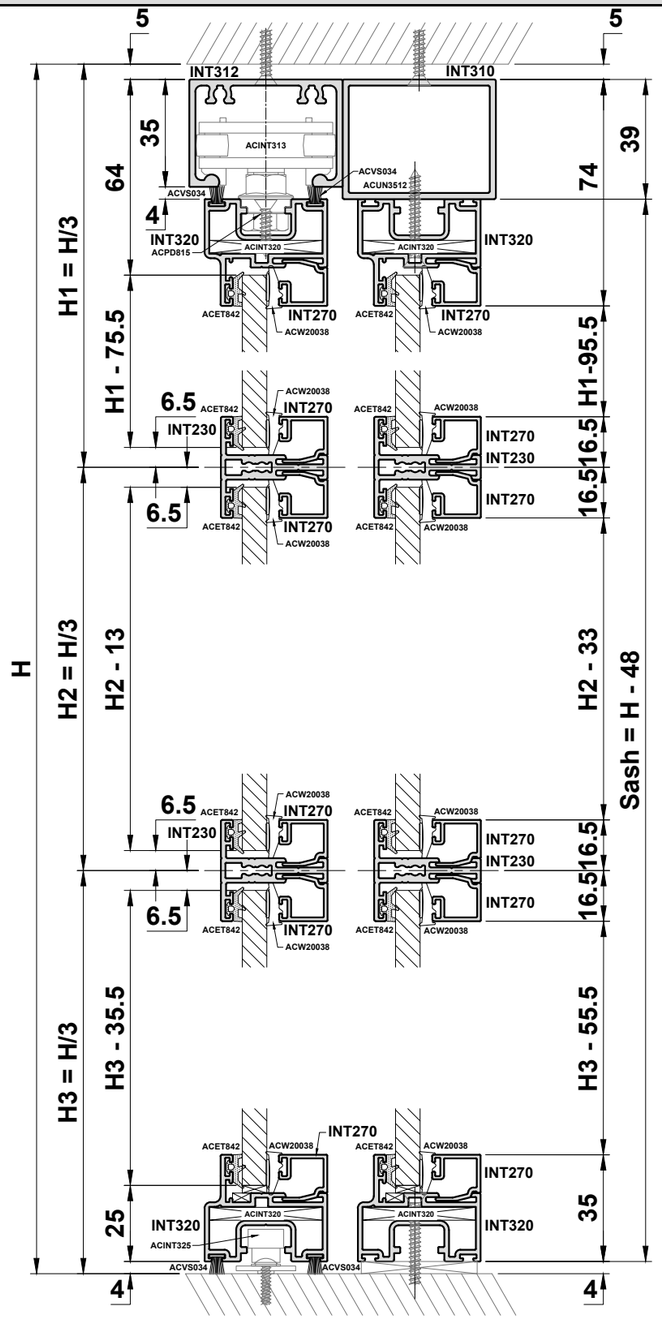

Profile Cutting Schedule		
INT230	2	W1 - 33
INT230	2	W2 - 34
INT238	1	H2 - 8
INT270	4	W1 - 33
INT270	2	W1 - 117.5
INT270	6	W2 - 34
INT270	4	H3 - 55.5
INT270	4	H2 - 33
INT270	4	H1 - 95.5
INT310	1	W
INT312	1	W
INT320	2	W1 + 12
INT320	2	W2 + 11
INT320	4	H - 48
INT322	1	H - 48
INT323	1	H - 48
PCX15	1	H - 48

Accessories		
ACET066	Screws	10
ACET067	Screws	16
ACET842	E Gasket	6(W1-38) + 2(H-98)
ACET842	E Gasket	6(W2-39) + 2(H-98)
ACINT230	Transom Bracket	8
ACINT312	End Cap	1 Pack
ACINT313	Top Carrier Roller	2
ACINT314	Buffer Stop	2
ACINT320	Sash Cleats	8
ACINT325	Bottom Guide	1
ACINT52_	Pull Handle	2
ACPD815	Screws	300mm centres
ACUN3512	Screws	300mm centres
ACUN3547	M4 Connecting Screws	8
ACVS034	Woolpile	4(W1+12) + 4(H-40)
ACW20038	Wedge Gasket	6(W1-38) + 2(H-98)
ACW20038	Wedge Gasket	6(W2-39) + 2(H-98)

(*) See Section B for handle options.

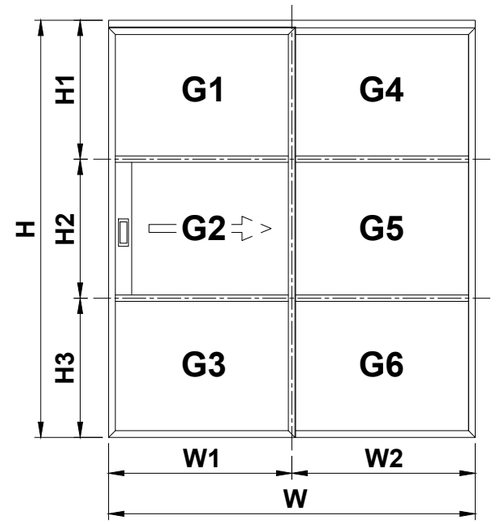

Glass						
G1	1	W1 - 38 X H1 - 75.5		G4	1	W2 - 39 X H1 - 75.5
G2	1	W1 - 122.5 X H2 - 13		G5	1	W2 - 39 X H2 - 13
G3	1	W1 - 38 X H3 - 35.5		G6	1	W2 - 39 X H3 - 35.5

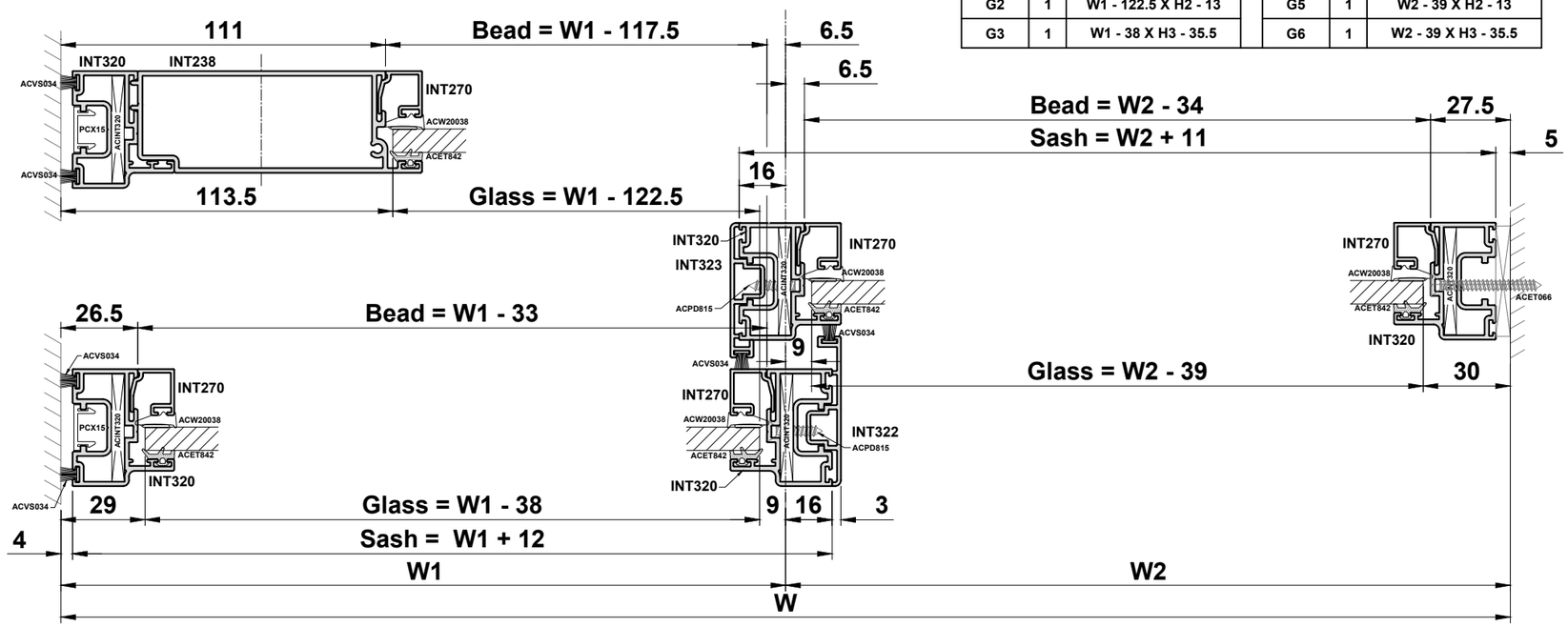

Do Not Scale From This Drawing

Cutting Information - Single Sliding Door & Fixed Screen

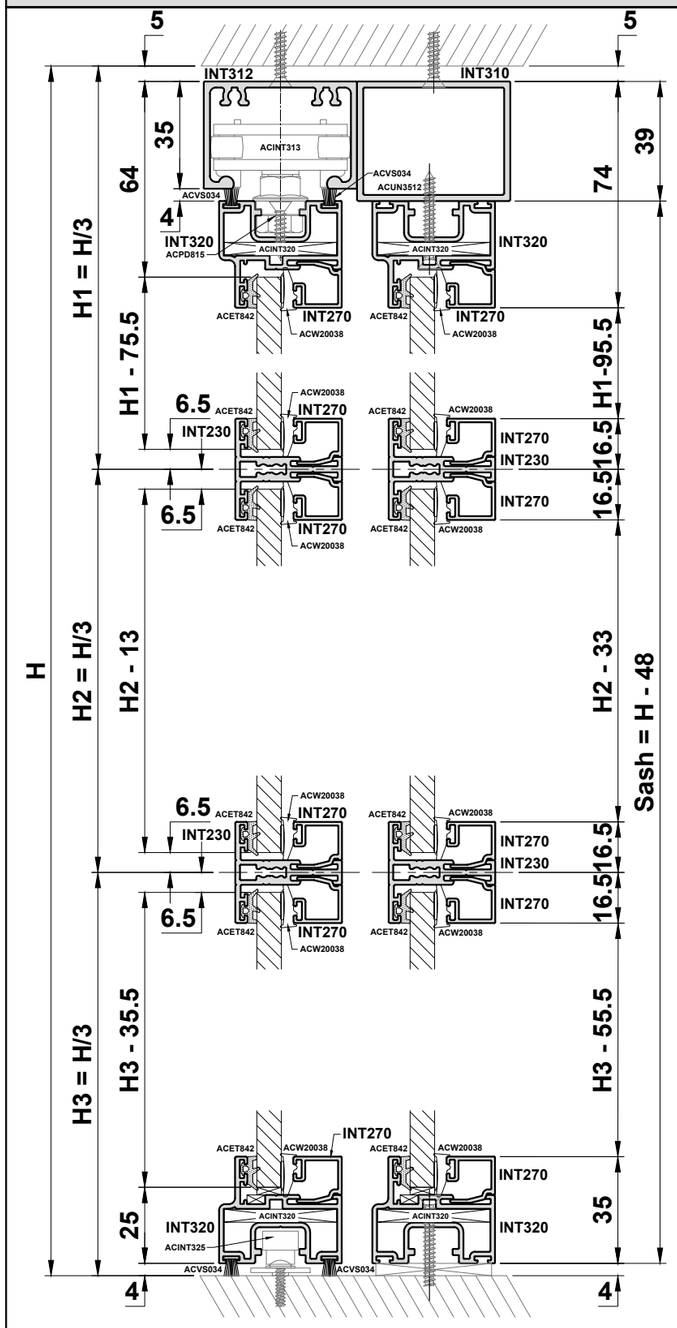

Profile Cutting Schedule		
INT230	2	W1 - 33
INT230	2	W2 - 29
INT230	2	W3 - 50
INT238	1	H2 - 8
INT270	4	W1 - 33
INT270	2	W1 - 117.5
INT270	6	W2 - 29
INT270	6	W3 - 50
INT270	6	H3 - 55.5
INT270	6	H2 - 33
INT270	6	H1 - 95.5
INT310	1	W
INT312	1	W
INT320	2	W1 + 12
INT320	2	W2 + 16
INT320	2	W3 - 5
INT320	6	H - 48
INT322	1	H - 48
INT323	1	H - 48
INT357	1	H - 48
PCX15	1	H - 48

Accessories		
ACET066	Screws	14
ACET067	Screws	24
ACET842	E Gasket	6(W1-38) + 2(H-98)
ACET842	E Gasket	6(W2-34) + 2(H-98)
ACET842	E Gasket	6(W3-55) + 2(H-98)
ACINT230	Transom Bracket	12
ACINT312	End Cap	1 Pack
ACINT313	Top Carrier Roller	2
ACINT314	Buffer Stop	2
ACINT320	Sash Cleats	12
ACINT325	Bottom Guide	1
ACINT52_	Pull Handle	2
ACPD815	Screws	300mm centres
ACUN3512	Screws	300mm centres
ACUN3530	Screws	300mm centres
ACUN3547	M4 Connecting Screws	12
ACVS034	Woolpile	4(W1+12) + 4(H-40)
ACW20038	Wedge Gasket	6(W1-38) + 2(H-98)
ACW20038	Wedge Gasket	6(W2-34) + 2(H-98)
ACW20038	Wedge Gasket	6(W3-55) + 2(H-98)

(*) See Section B for handle options.

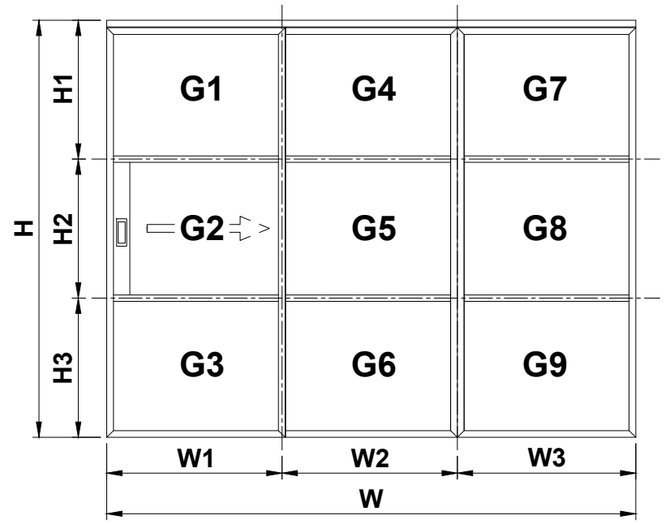

Glass								
G1	1	W1 - 38 X H1 - 75.5	G4	1	W2 - 34 X H1 - 75.5	G7	1	W3 - 55 X H1 - 75.5
G2	1	W1 - 122.5 X H2 - 13	G5	1	W2 - 34 X H2 - 13	G8	1	W3 - 55 X H2 - 13
G3	1	W1 - 38 X H3 - 35.5	G6	1	W2 - 34 X H3 - 35.5	G9	1	W3 - 55 X H3 - 35.5

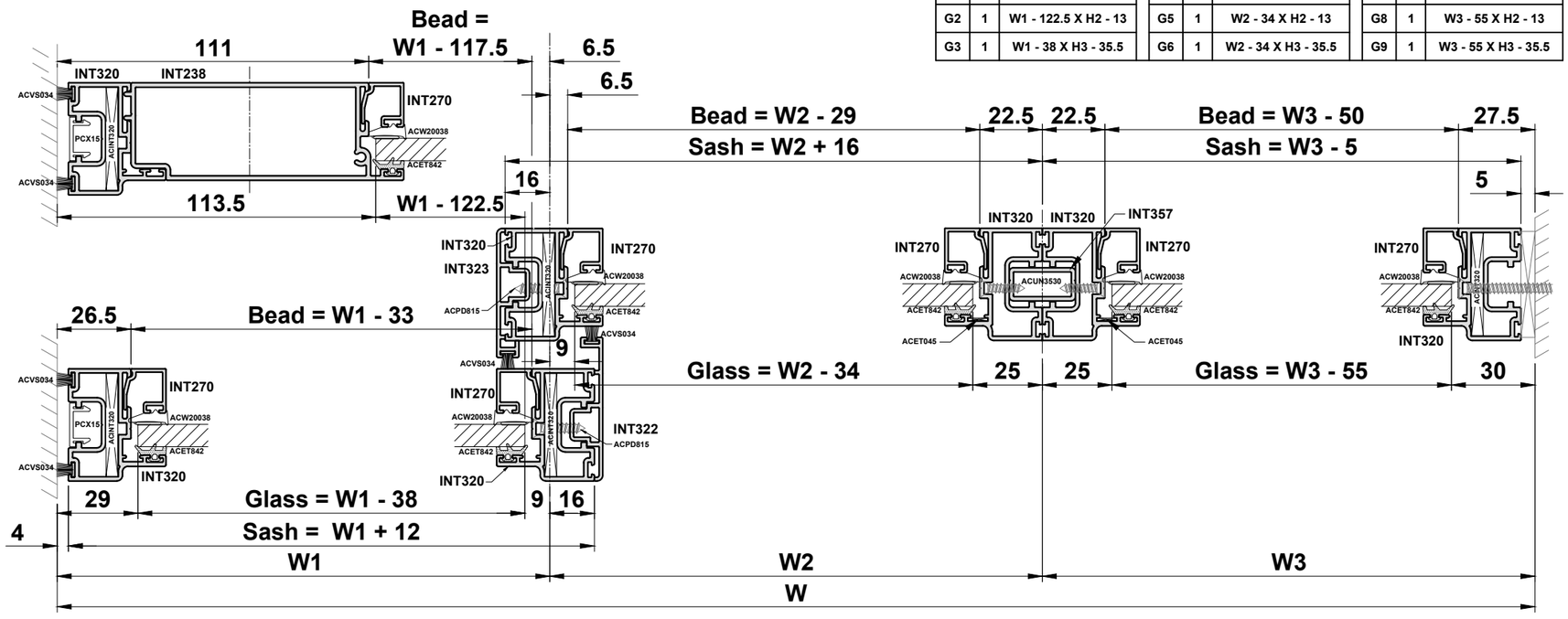

Do Not Scale From This Drawing

Cutting Information - Double Sliding Door

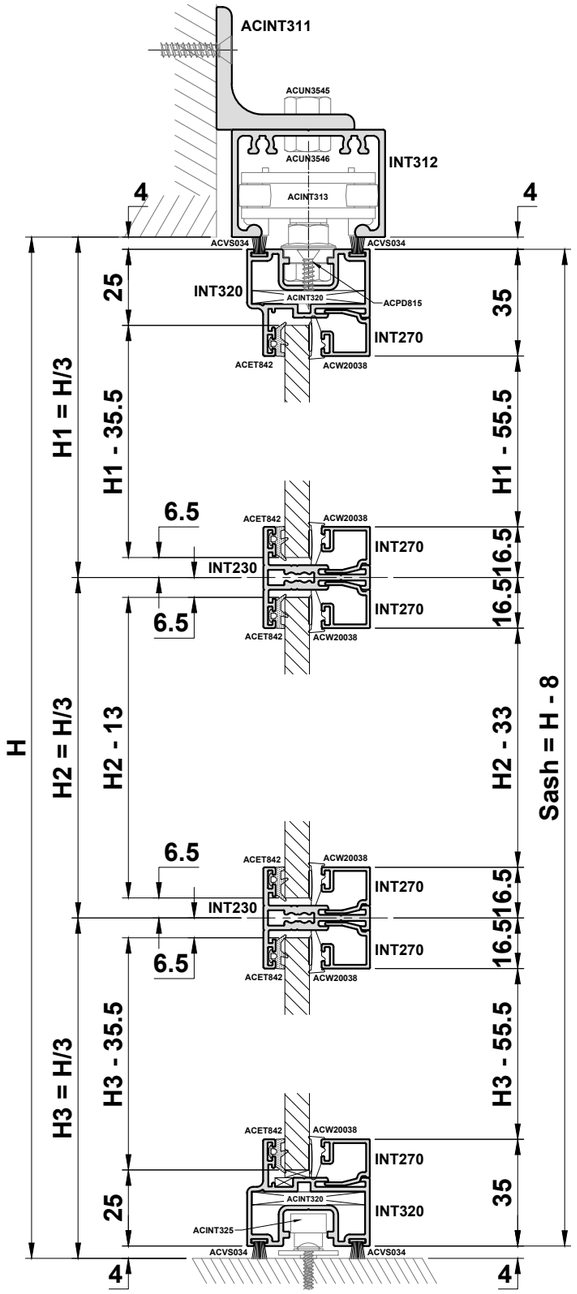

Profile Cutting Schedule		
INT230	4	W/2 - 40.5
INT238	2	H2 - 8
INT270	8	W/2 - 40.5
INT270	4	W/2 - 125.5
INT270	4	H3 - 55.5
INT270	4	H2 - 33
INT270	4	H1 - 55.5
INT312	1	2(W + 14)
INT320	4	W/2 + 4.5
INT320	4	H - 8
INT323	2	H - 8
PCX15	2	H - 8

Glass		
G1	2	W/2 - 45.5 X H1 - 35.5
G2	2	W/2 - 130.5 X H2 - 13
G3	2	W/2 - 45.5 X H3 - 35.5

Accessories		
ACET060	Screws	6
ACET066	Screws	12
ACET067	Screws	16
ACET842	E Gasket	12(W/2-40.5) + 4(H-58)
ACINT230	Transom Bracket	8
ACINT311	Brackets	3
ACINT312	End Cap	1 Pack
ACINT313	Top Carrier Roller	4
ACINT314	Buffer Stop	4
ACINT320	Sash Cleats	8
ACINT325	Bottom Guide	2
ACINT52_	Pull Handle (*)	4
ACPD815	Screws	300mm centres
ACUN3545	M8 Screws	3
ACUN3546	M8 Nuts	3
ACUN3547	M4 Connecting Screws	8
ACVS034	Woolpile	8(W/2+4.5) + 6H
ACW20038	Wedge Gasket	12(W/2-40.5) + 4(H-58)

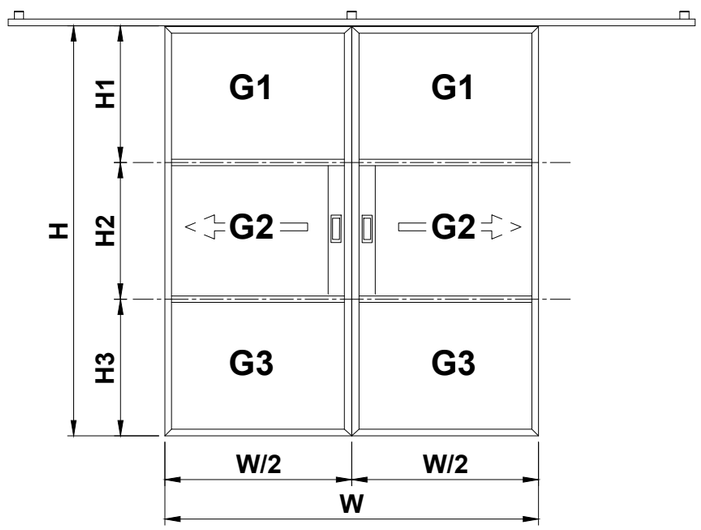

(*) See Section B for handle options.

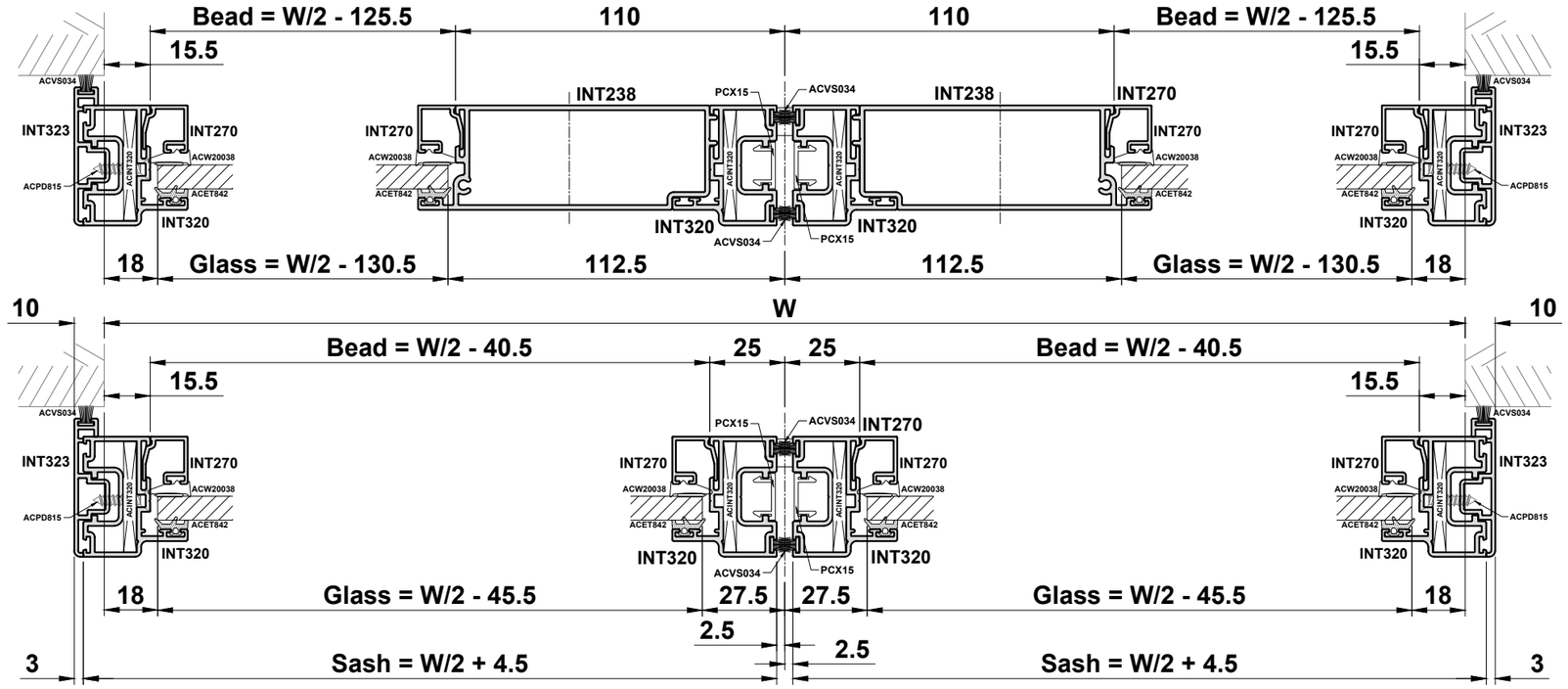

Do Not Scale From This Drawing

Cutting Information - Pivot Door

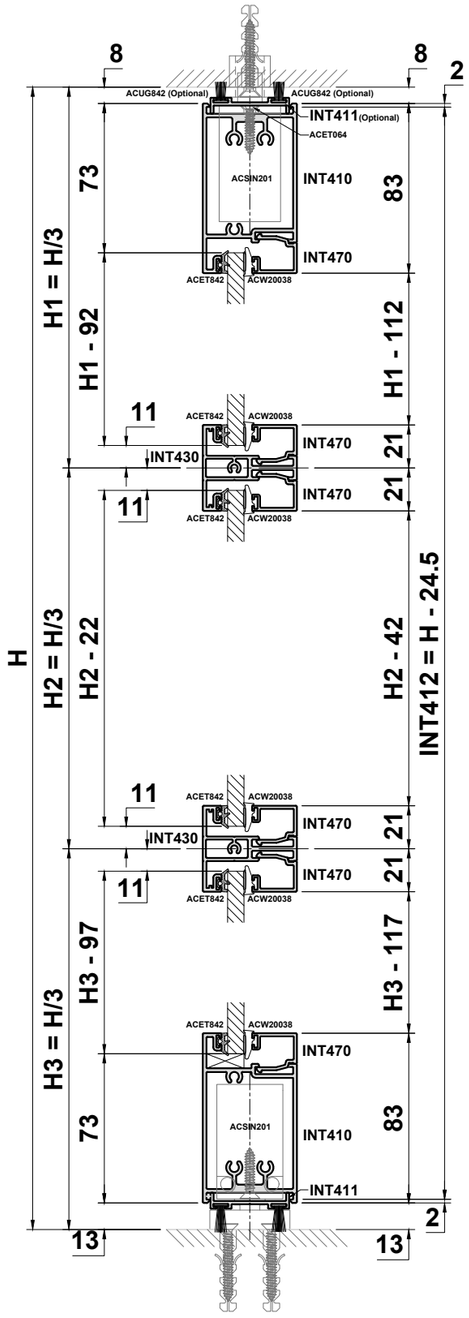

Profile Cutting Schedule				
INT410	2			W - 108
INT411	2 (**)			W - 108
INT412	2			H
INT413	2			H
INT420	2			H - 24.5
INT430	2			W - 108
INT438	1			H2 - 12
INT470	4			W - 108
INT470	2			W - 197.5
INT470	2			H3 - 117
INT470	2			H2 - 42
INT470	2			H1 - 112
INT471	2			H3 - 117
INT471	2			H2 - 42
INT471	2			H1 - 112
PCX15	2			H - 21
PCX41	2			H - 21

Accessories		
ACDR052	Screws	12
ACET064	Screws	300mm centres
ACET066	Screws	6
ACET067	Screws	8
ACET842	E Gasket	6(W-118) + 2(H-167)
ACINT237/238	Magnetic Sash Lock	1
ACINT239	Forend Cover	1
ACINT240	Striker Cover Plate	1
ACINT241	Latch Cover Tray with magnet	1
ACINT411	Woolpile	2(W - 108)
ACINT420	End Cap	2 Pairs
ACINT421	Block	1 Pack
ACINT430	Transom Bracket	4
ACINT5__	Lever Handle (*)	Pair
ACSIN201	Pivot System	1
ACUG842	Woolpile (**)	2(W - 108)
ACUN3530	Screws	300mm centres
ACUN3551	M4 Connecting Screws	4
ACVS034	Woolpile	2H
ACW20038	Wedge Gasket	6(W-118) + 2(H-167)

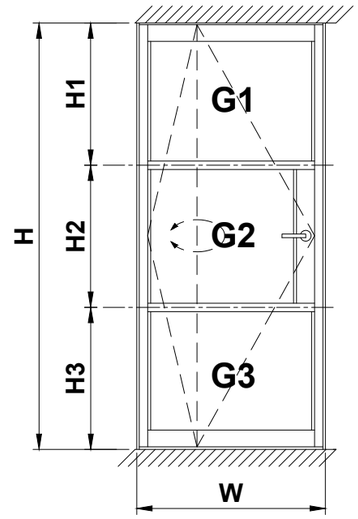

(*) See Section B for handle options.
(**) ACINT411 is optional on the top side as well as ACUG842)
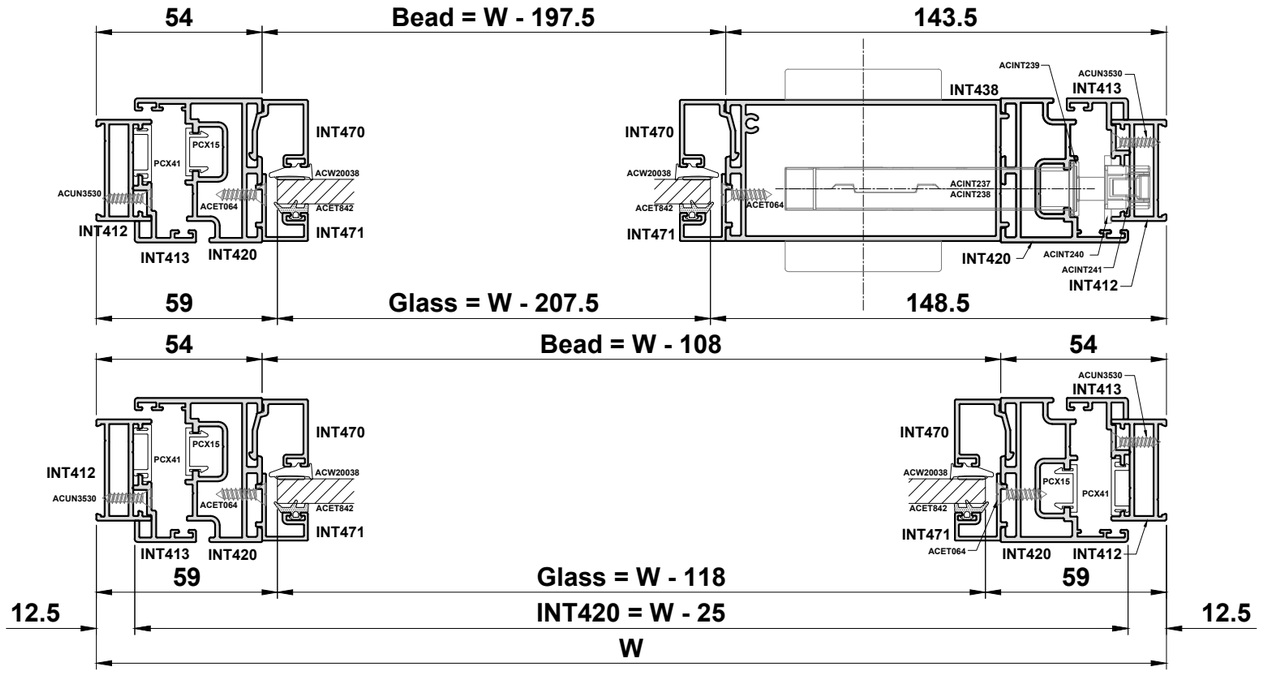
Glass		
G1	1	W - 118 X H1 - 92
G2	1	W - 207.5 X H2 - 22
G3	1	W - 118 X H3 - 97