Main Index

Main Index

E UL

Construction Drawings - Open Out

F UL

Sawing Tables

Specification

GENERAL DESCRIPTION

The Visotherm door system described in this manual is suitable for domestic or commercial applications as replacement doors for existing buildings, and for installation into new buildings.

The low line gaskets and extended polyamide thermal breaks help to provide excellent U-Values and window energy rating capable of achieving an 'A+' rating when used in conjunction with the correct triple glazed unit. Please refer to the WER calculator for guidance.

Visotherm uses Smart Systems punch tooling to mechanically join outer frame and sash corners.

Doors:

- Single Open In Doors
- Double Open In Doors
- Single Open Out Doors
- Double Open Out Doors

Visotherm Doors are tested to PAS24 without the need for hinge protectors or keep reinforcement

PROFILE SPECIFICATION

The window frame are constructed of aluminium alloy extrusion to BS EN 755-9 and BS EN 12020, extruded to 6063 T6 alloy. The internal and external extrusions are separated with a polyamide thermal break.

The external aluminium alloy extrusion is pre-treated and finished either:-

a) Anodised to BS 3987: 1987, grade AA25 to a natural self colour.

b) Polyester powder organic coating to BS 6496. Dual colour is available.

Specification

GENERAL MANUFACTURING

Outer and vent frames are made by cutting the frame profiles with accurate 45° mitred ends using Tungsten Carbide Tipped Saw Blades, operating at approximately 3000 rpm.

The outer frame corner joints can be made using mechanically fixed corner cleats by punching holes in the corners using the relevant punch tooling shown in section E of this manual.

The ends of transoms and mullions are profiled to fit the frame and fixed using self-tapping screws with a small joint sealant.

On polyester powder coated finishes, great care should be taken to avoid getting gap sealer on visible surfaces and should be removed as soon as possible with a clean cloth.

Important Note: All exposed aluminium should be coated using ACSIL014 or painted to match the frame.

Care should be exercised when using products not supplied by Smart Systems Ltd as no responsibility can be accepted.

SIZE LIMITATIONS

Door Type	Max Leaf Width (mm)	Max Leaf Height (mm)	Overall Width (mm)	Overall Height (mm)
Single Door Open In	1100	2400	1164	2464
Double Door Open In	1100	2400	2276	2464
Single Door Open Out	1100	2400	1164	2464
Double Door Open Out	1100	2400	2276	2464

Important Notes:

1. Max leaf weight 100kg
2. Size limitations are based on current profiles using full frame

For advise on door sizes outside of the recommended design limitations, please contact the Technical Department at Smart Systems Ltd Tel: 01934 876100

Specification

DOOR DRAINAGE

As with all dry glazed systems, it is recommended that the door system is adequately drained and ventilated. Refer to drainage details in manual, if in doubt ask the technical department.

In order to get maximum performance and weather resistance, it is recommended that drips are used above all open-out door leaves and at the bottom of all open-in doors. it is also recommended to use at the bottom of open-out doors where the low ramp threshold are used.

OUTER FRAME MANUFACTURING INFORMATION

The outer frame members are cut with 45° mitred ends to the overall size required, measured to the longest point of the metal.

Using the marked centre line, Drill the transom/mullion fixing holes using a 5mm dia. drill bit.

Corners are formed by either drilling or punching, the corners ready for the cleat machine screws. Then, coating the cut faces to be joined with ACSIL04. Into the mitred corner insert the ACSIL013 and the required corner cleats. The two mitred ends are then brought together and screwed. ACSIL04 ensures a permanent joint and guards against the ingress of moisture and joint movement. After screwing the corner joint, special care should be taken to ensure any excess ACSIL04 is removed from painted surfaces

Transoms or mullions are cut with square ends to the sizes calculated on the cutting formula sheets. The ends are then profiled to allow them to fit into the outer frame. 3rd Party tooling is available on request to profile the end of transom/mullion.

Prior to fixing of transoms and mullions, cover the cut ends with ACSIL04. After fixing, special care should be taken to ensure any excess is cleared from painted surfaces.

Specification

SASH

Corners are formed by either drilling or punching, the corners ready for the cleat machine screws. Then, coating the cut faces to be joined with ACSIL04. Into the mitred corner insert the ACSIL013 and the required corner cleats. The two mitred ends are then brought together and screwed. ACSIL04 ensures a permanent joint and guards against the ingress of moisture and joint movement. After screwing the corner joint, special care should be taken to ensure any excess ACSIL04 is removed from painted surfaces

GLAZING

All beads are cut to suit the glazing aperture on the fully assembled window for glazing either at factory or on site as required.

INTERNALLY BEADED GLAZING

Glazing beads are fitted to openings by cutting the horizontal beads square to head and cill of each sash and reverse adaptor area. Vertical beads are cut square at both ends. Insert bottom beads and two setting blocks to ensure glass will be centralized in vertical dimension of opening (glazing blocks must be full width of cavity to fully support glass or sealed unit), then insert top bead followed by side beads. Finish glazing by insertion of internal gaskets all round.

VISOTHERM DOOR WEATHER PERFORMANCE (BS6375-1)

Low thresholds have not been weather tested as they are unlikely to exceed UK exposure category 800 X shown below:

See pages A07 & A08.

VISOTHERM DOOR SECURITY (PAS24:2016)

Visotherm door standard parts are able to achieve PAS24 requirement.

VISOTHERM DOOR U VALUES

Please refer to the Smart Systems Document L White Paper or contact the Technical Department.

Specification

Kitemark™ Certificate

Aluminium Alloy Residential Door System (Slam lock/Key wind/Lift lever)

BS 6375:2016 / PAS 24:2016 - General and enhanced security performance requirements for door assemblies.

Profiles:

Outer Frame: All Outer Frames.
Sash: All Sashes.
Mid-rail: All Mid-rails.
Meeting Stile: UL248

Hardware:

Locking: ACUL272, ACUL273, ACUL280, ACUL281, ACUL282, ACUL383, ACUL360, ACUL361, ACUL263, ACUL374, ACUL375, ACUL377, ACUL378, ACUL380, ACUL381, ACUL382 & ACUL383.
Keep: ACUL390.
Hinges: All Hinges.
Handle: All Handles.
Cylinder: All Cylinders.

Size Limitations And Performance Characteristics

Door Type	Leaf Width (mm) - Maximum	Leaf Height (mm) - Maximum	Air Permeability Classification	Watertightness Classification	Resistance To Wind Classification	Exposure Category As Given In Table 1 Of BS6375-1:2009
Double Leaf Open In Full Frame	1100	2400	Class 2 Air	Class 3A Water	C3	1800
Double Leaf Open Out Full Frame	1100	2400	Class 2 Air	Class 9A Water	A3	1200
Double Leaf Open In Low Rebate Threshold	1100	2400	Class 3 Air	Class 3A Water	A3	1200
Double Leaf Open Out Low Rebate Threshold	1100	2400	Class 2 Air	Class 4A Water	C3	1200

Specification

Kitemark™ Certificate

Aluminium Alloy Residential Door System (Lift Lever with Shootbolts)

BS 6375:2016 / PAS 24:2016 - General and enhanced security performance requirements for door assemblies.

Profiles:

Outer Frame: All Outer Frames.
Sash: All Sashes.
Mid-rail: All Mid-rails.
Meeting Stile: UL247

Hardware:

Locking: ACUL276, ACUL277 & ACUL278.
Keep: ACUL279.
Hinges: All Hinges.
Handle: All Handles.
Cylinder: All Cylinders.

Size Limitations And Performance Characteristics

Door Type	Leaf Width (mm) - Maximum	Leaf Height (mm) - Maximum	Air Permeability Classification	Watertightness Classification	Resistance To Wind Classification	Exposure Category As Given In Table 1 Of BS6375-1:2009
Double Leaf Open In Full Frame	1100	2400	Class 4 Air	Class 3A Water	C3	1200
Double Leaf Open Out Full Frame	1100	2400	Class 3 Air	Class E 900 Water	C3	1200
Double Leaf Open In Low Rebate Threshold	NOT TESTED					
Double Leaf Open Out Low Rebate Threshold						

Important note: Visotherm Doors can acheive higher wind classification with the use of hinge protectors. Please contact technical department for further information.

Number	Picture	Page	Perim. mm	Mec. mm	Ix(cm4) wx(cm3)	Iy(cm4) wy(cm3)	Length	Pack pr.	MF	SA	KL	HP	M
UL048	A 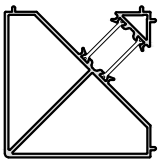 B	A24	428	161	67.01 / 14.96	67.01 / 17.59	6.5	1	✓	✓	✓	✓	✓
UL050	A 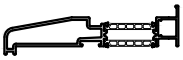 B	A28	427	211	168.01 / 21.16	6.22 / 3.42	6.5	1	✓	✓	✓	✓	✓
UL051	A 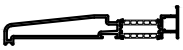 B	A28	507	290	330.03 / 32.58	8.14 / 4.55	6.5	1	✓	✓	✓	✓	✓
UL055	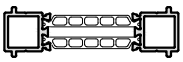	A29	224	37	26.65 / 6.66	1.29 / 1.13	6.5	1	✓	✓	✓	✓	✓
UL056	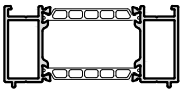	A29	300	71	38.49 / 9.62	5.74 / 3.15	6.5	1	✓	✓	✓	✓	✓
UL063	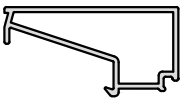	A25	142	63	- / -	- / -	6.5	1	✓	✓	✓	✓	
UL064	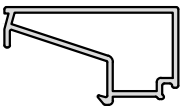	A25	135	59	- / -	- / -	6.5	1	✓	✓	✓	✓	
UL065	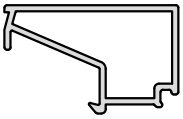	A25 A26	127	56	- / -	- / -	6.5	1	✓	✓	✓	✓	
UL066	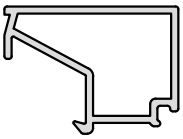	A25 A26	118	51	- / -	- / -	6.5	1	✓	✓	✓	✓	

A = Outside
B = Inside

GOZ = Gold
W = White
Z = Black

MF = Mill Finish
SA = Silver Anodised
KL = Basic Colour
HP = Special Colour
M = Dual Colour

Number	Picture	Page	Perim. mm	Mec. mm	Ix(cm4) wx(cm3)	Iy(cm4) wy(cm3)	Length	Pack pr.	MF	SA	KL	HP	M
UL067	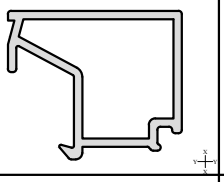	A26	110	46	- — -	- — -	6.5	1	✓	✓	✓	✓	
UL068	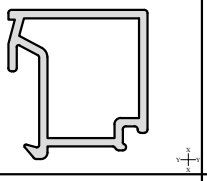	A27	101	40	- — -	- — -	6.5	1	✓	✓	✓	✓	
UL069	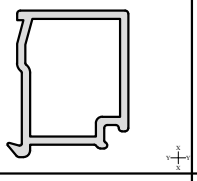	A27	87	48	- — -	- — -	6.5	1	✓	✓	✓	✓	
UL078	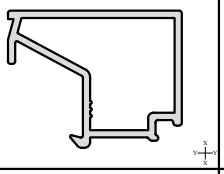	A27	120	51.9	- ---- -	- ---- -	6.5	1	✓	✓	✓	✓	
UL204	A 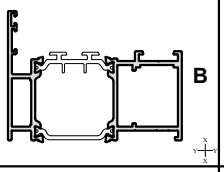 B	A30	420	105	48.50 — 11.31	12.27 — 5.22	6.5	1	✓	✓	✓	✓	✓
UL206	A 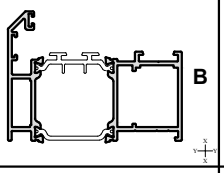 B	A30	442	109	49.89 — 11.36	14.38 — 5.82	6.5	1	✓	✓	✓	✓	✓
UL210	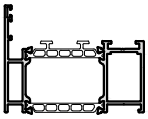 **Open In Shown Reverse for Open Out**	A13	404	114	51.10 — 12.08	12.14 — 5.04	6.5	1	✓	✓	✓	✓	✓
UL224	A 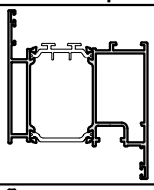 B	A14	559	164	69.18 — 17.12	37.54 — 7.82	6.5	1	✓	✓	✓	✓	✓
UL225	A 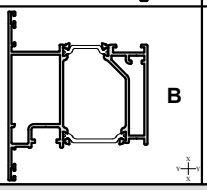 B	A16	567	167	70.94 — 16.65	40.75 — 8.63	6.5	1	✓	✓	✓	✓	✓

A = Outside
B = Inside

GOZ = Gold
W = White
Z = Black

MF = Mill Finish
SA = Silver Anodised
KL = Basic Colour
HP = Special Colour
M = Dual Colour

Number	Picture	Page	Perim. mm	Mec. mm	Ix(cm4) wx(cm3)	Iy(cm4) wy(cm3)	Length	Pack pr.	MF	SA	KL	HP	M
UL226	A 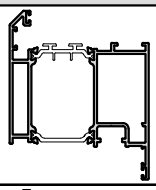 B	A15	581	171	70.97 — 17.52	41.68 — 8.76	6.5	1	✓	✓	✓	✓	✓
UL227	A 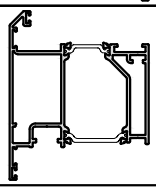 B	A17	585	170	70.85 — 16.18	44.28 — 9.56	6.5	1	✓	✓	✓	✓	✓
UL230	A 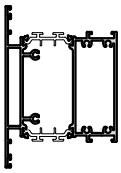 B	A22	711	204	88.55 — 20.13	81.07 — 13.98	6.5	1	✓	✓	✓	✓	✓
UL231	A 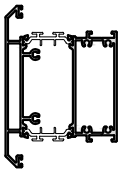 B	A23	724	211	—	91.87 — 15.84	6.5	1	✓	✓	✓	✓	✓
UL232	A 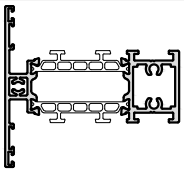 B	A21	435	125	41.48 ---- 10.78	11.37 ---- 3.07	6.5	1	✓	✓	✓	✓	✓
UL247	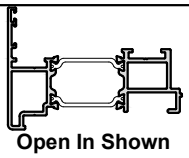 **Open In Shown Reverse for Open Out**	A18	419	100	—	8.67 — 3.5	6.5	1	✓	✓	✓	✓	✓
UL248	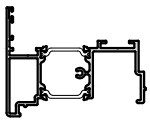 **Open In Shown Reverse for Open Out**	A18	547	126	51.81 — 10.34	13.04 — 4.43	6.5	1	✓	✓	✓	✓	✓
UL290	A 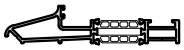 B	A19	335	66	56.7 — 9.71	1.45 — 0.25	6.5	1	✓	✓			
UL292	A 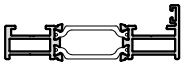 B	A19	282	47	24.66 — 6.15	0.87 — 0.89	6.5	1	✓	✓	✓	✓	✓

A = Outside
B = Inside

GOZ = Gold
W = White
Z = Black

MF = Mill Finish
SA = Silver Anodised
KL = Basic Colour
HP = Special Colour
M = Dual Colour

smart architectural aluminium

Visotherm Door

PROFILES : TECHNICAL INFORMATION

Number	Picture	Page	Perim. mm	Mec. mm	Ix(cm4) wx(cm3)	Iy(cm4) wy(cm3)	Length	Pack pr.	MF	SA	KL	HP	M
UL295	 **Open In Shown Reverse for Open Out**	A20	306	78	44.83 —— 8.93	1.06 —— 1.29	6.5	1	✓	✓			
UL296	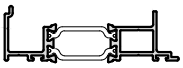 **Open In Shown Reverse for Open Out**	A20	286	26	16.01 —— 4.1	0.92 —— 1.07	6.5	1	✓	✓	✓	✓	✓
UL297	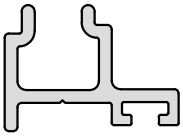	A19	106	12	- —— -	- —— -	6.5	1	✓	✓	✓	✓	
EUD03		A20	113	39	- ----- -	- ----- -	4	1	✓	✓			
PCX15	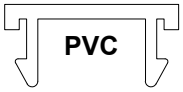 **PVC**	A19	43.4	---	- —— -	- —— -	6.5	1					
PCX47	 **PVC**	A19	43.4	---	- —— -	- —— -	6.5	1					
VL72	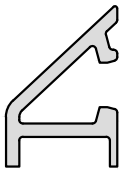	A20	99.5	30.6	- —— -	- —— -	6.5	1	✓	✓	✓	✓	

A = Outside
B = Inside

GOZ = Gold
W = White
Z = Black

MF = Mill Finish
SA = Silver Anodised
KL = Basic Colour
HP = Special Colour
M = Dual Colour

ISSUED: OCTOBER 2022

Primary Visible Side - - - - - - - - - - - - - - - - - - Secondary Visible Side — · — · — · — · — · — · — · —

UL210
Outer Frame

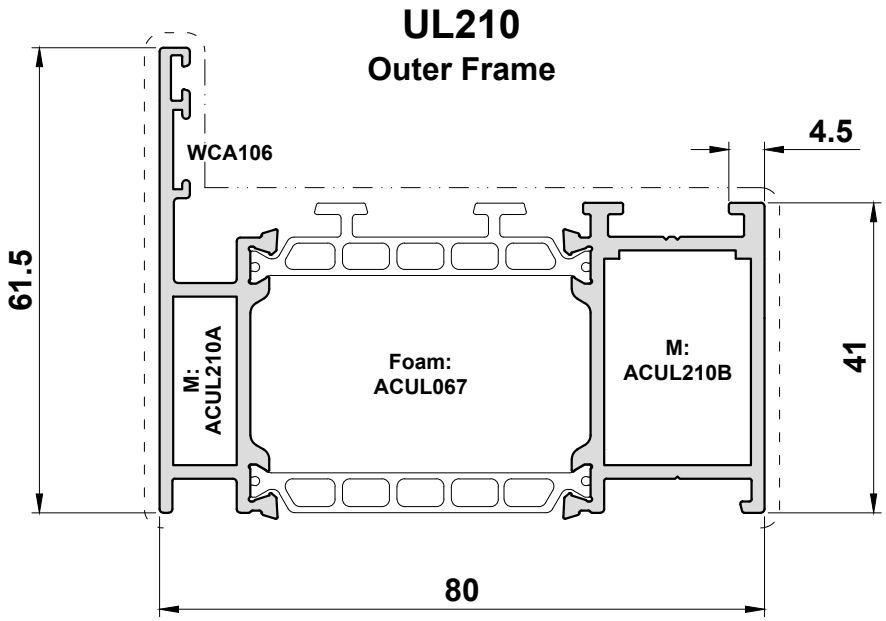

SCALE 1:1

Primary Visible Side - - - - - - - - - - - - - - - - Secondary Visible Side — · — · — · — · — · — · — · —

UL224
Open In
Flat Sash

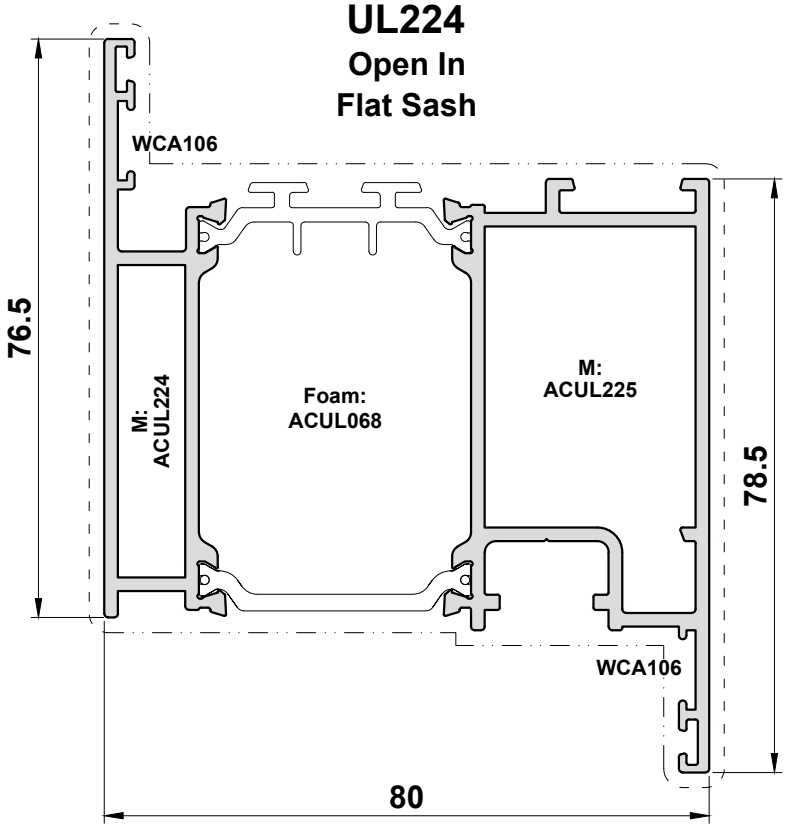

SCALE 1:1

Primary Visible Side - - - - - - - - - - - - - - - - - - Secondary Visible Side — · — · — · — · — · — · — · —

UL226
Open In
Chamfered Sash

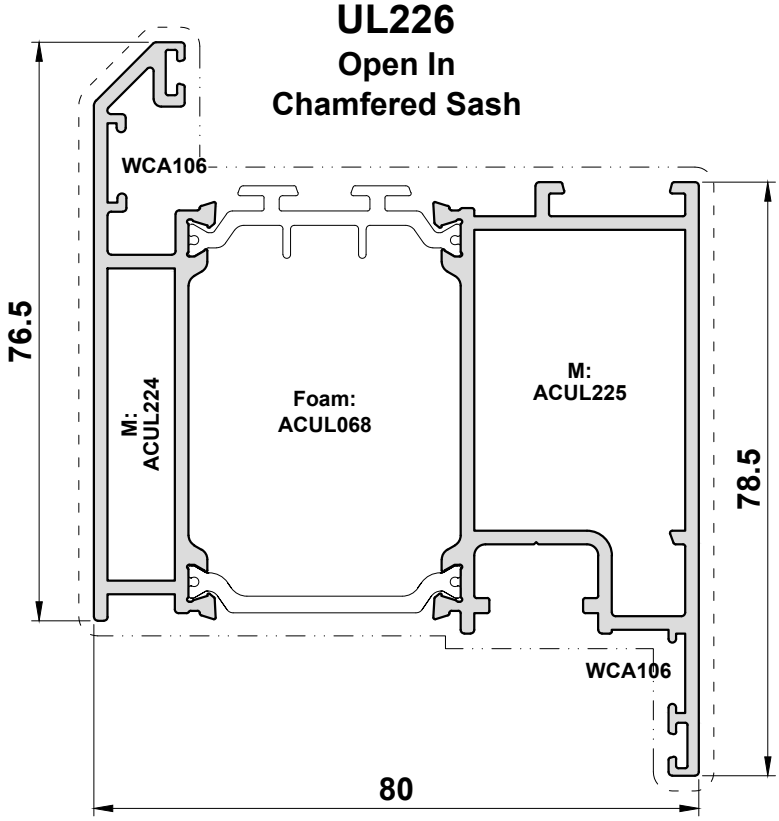

Primary Visible Side - - - - - - - - - - - - - - - - - - Secondary Visible Side — · — · — · — · — · — · — · —

UL225
Open Out
Flat Sash

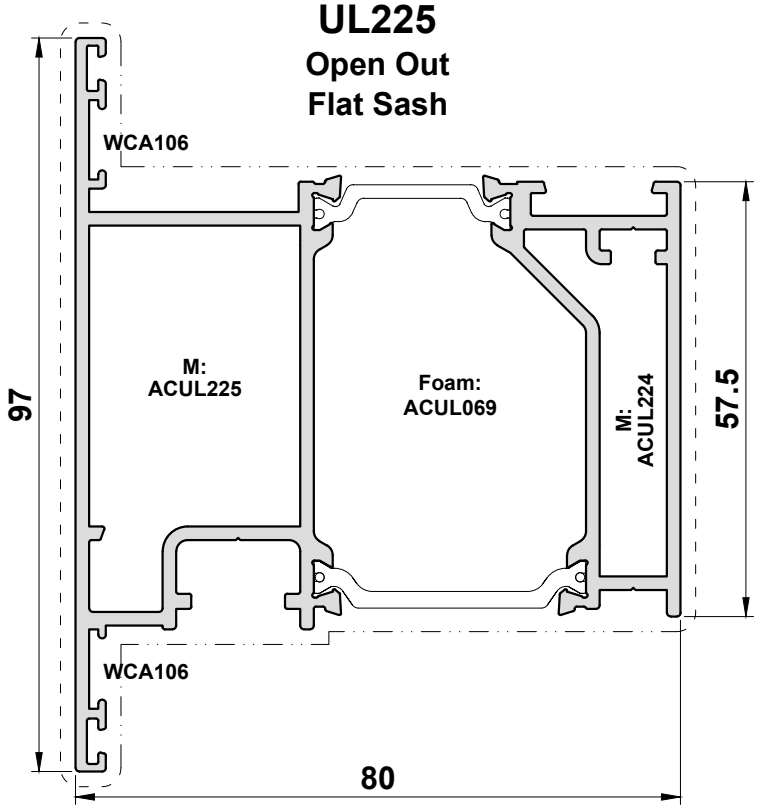

Primary Visible Side - - - - - - - - - - - - - - - - - - Secondary Visible Side — · — · — · — · — · — · — · —

UL227
Open Out
Chamfered Sash

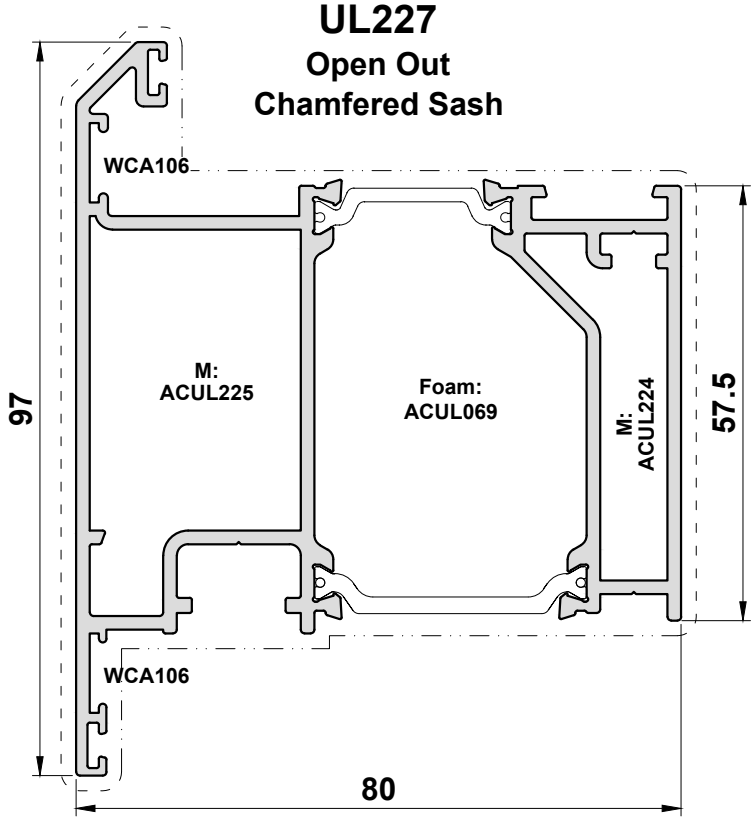

Primary Visible Side - - - - - - - - - - - - - - - - - - Secondary Visible Side — · — · — · — · — · — · — · —

UL247
Double Door Meeting Stile

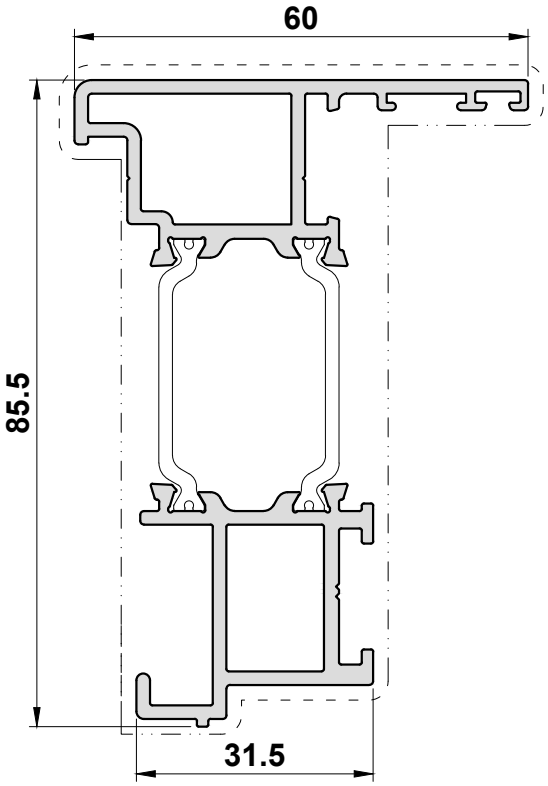

End Caps: ACUL247
ACUL248 /
ACUL249

UL248
Double Door Meeting Stile

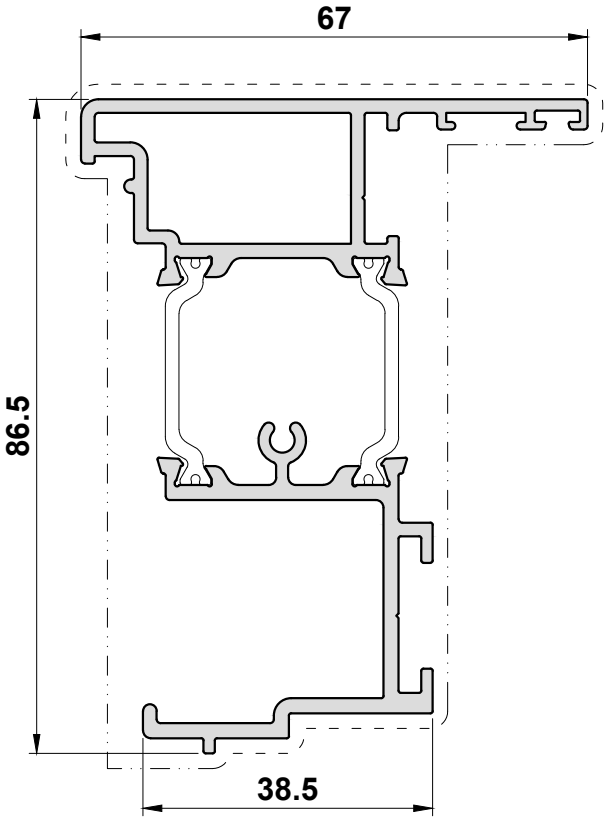

End Caps: ACUL244
ACUL245 /
ACUL246

Primary Visible Side - - - - - - - - - - - - - - - - Secondary Visible Side — · — · — · — · — · — · — · —

UL290
Open In
Low Threshold

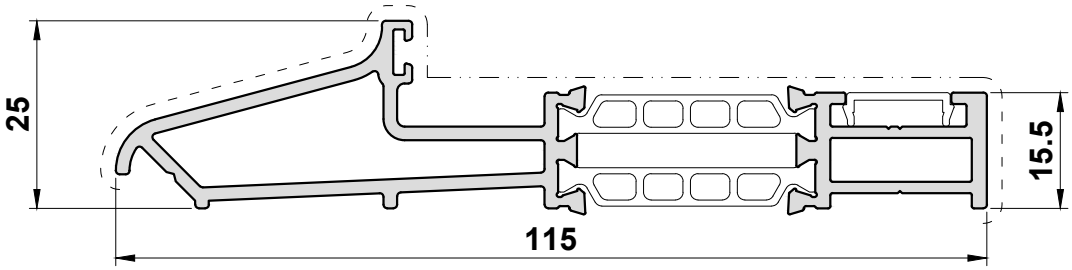

End Cap: ACUL290

UL292
Open Out
Low Threshold

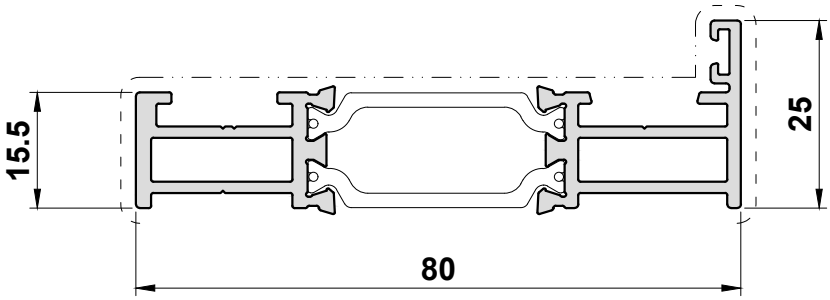

End Cap: ACUL292

PCX47
PVC Infill

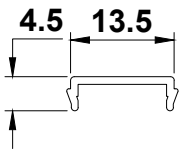

PCX15
PVC Infill

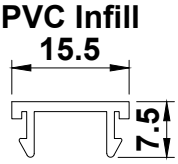

UL297
Low Threshold Adaptor

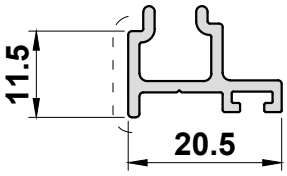

End Cap:
ACUL297

Primary Visible Side - - - - - - - - - - - - - - - - - - Secondary Visible Side — · — · — · — · — · — · — · —

UL296
Ramp Adaptor

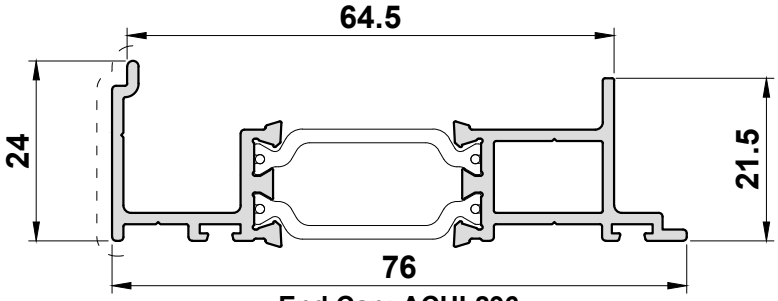

End Cap: ACUL296

UL295
Ramp Threshold

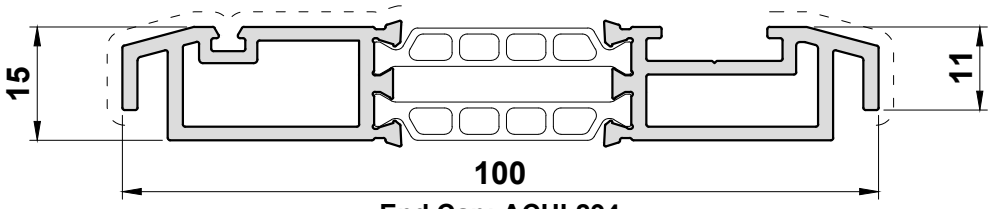

End Cap: ACUL294

EUD03
Ramp

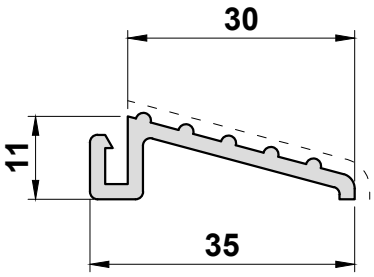

VL72
Weather Drip

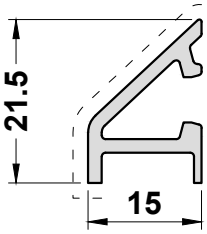

End Cap: ACVL059
Rivet: ACVL061

Primary Visible Side - - - - - - - - - - - - - - - - - - Secondary Visible Side — · — · — · — · — · — · — · —

UL232
Door Mullion

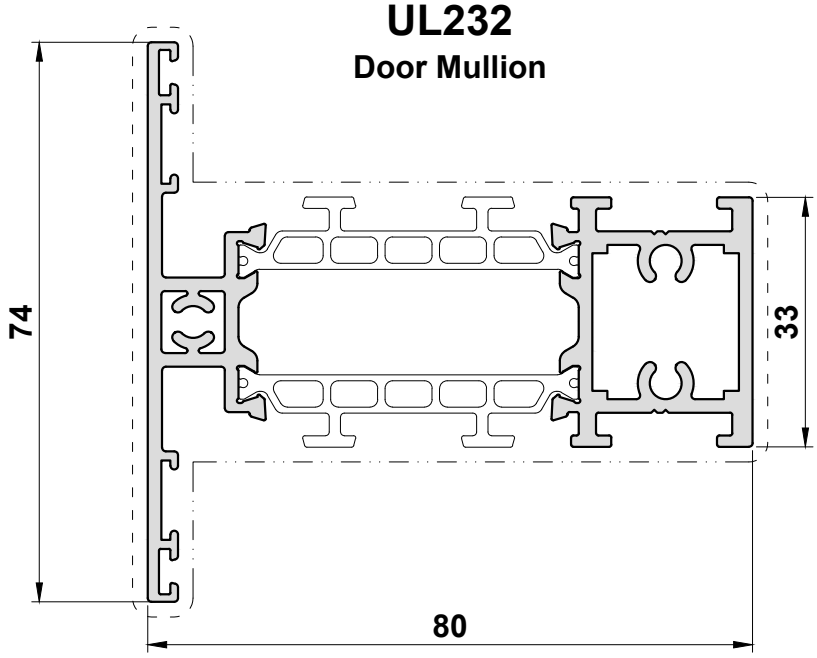

Primary Visible Side - - - - - - - - - - - - - - - - - - Secondary Visible Side — · — · — · — · — · — · — · —

UL230
Flat Mid Rail

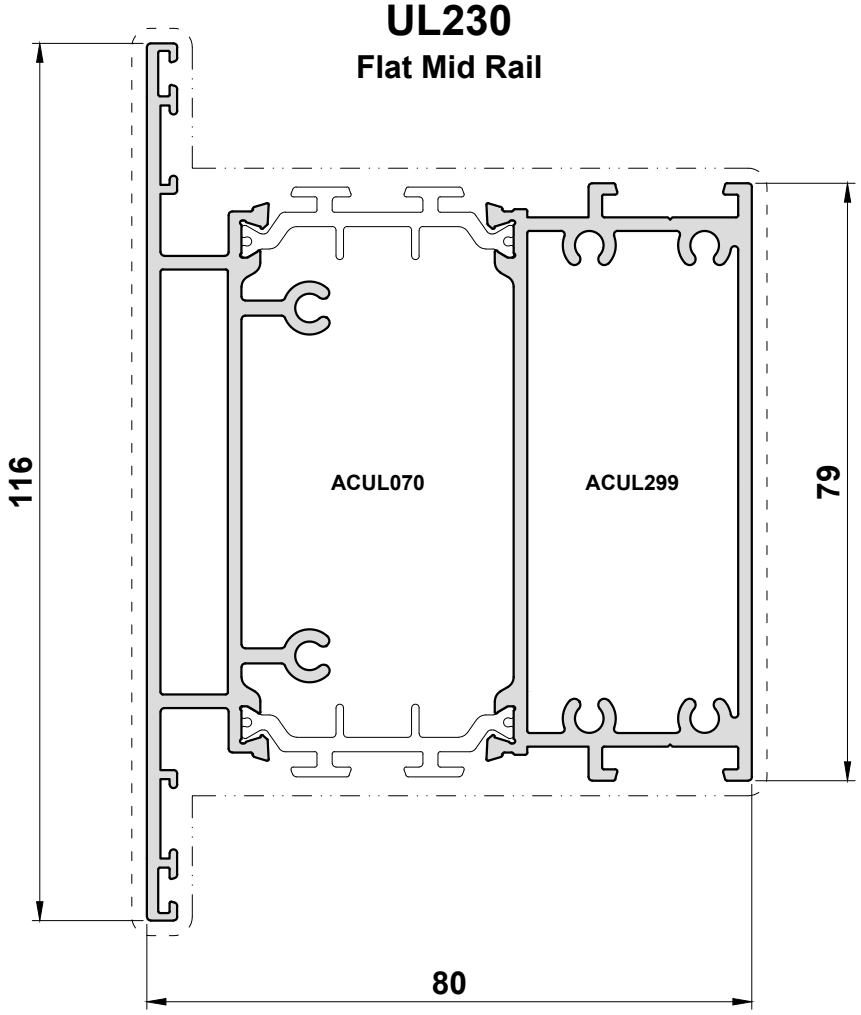

Primary Visible Side - - - - - - - - - - - - - - - - - - Secondary Visible Side — · — · — · — · — · — · — · — · —

UL231
Chamfered Mid Rail

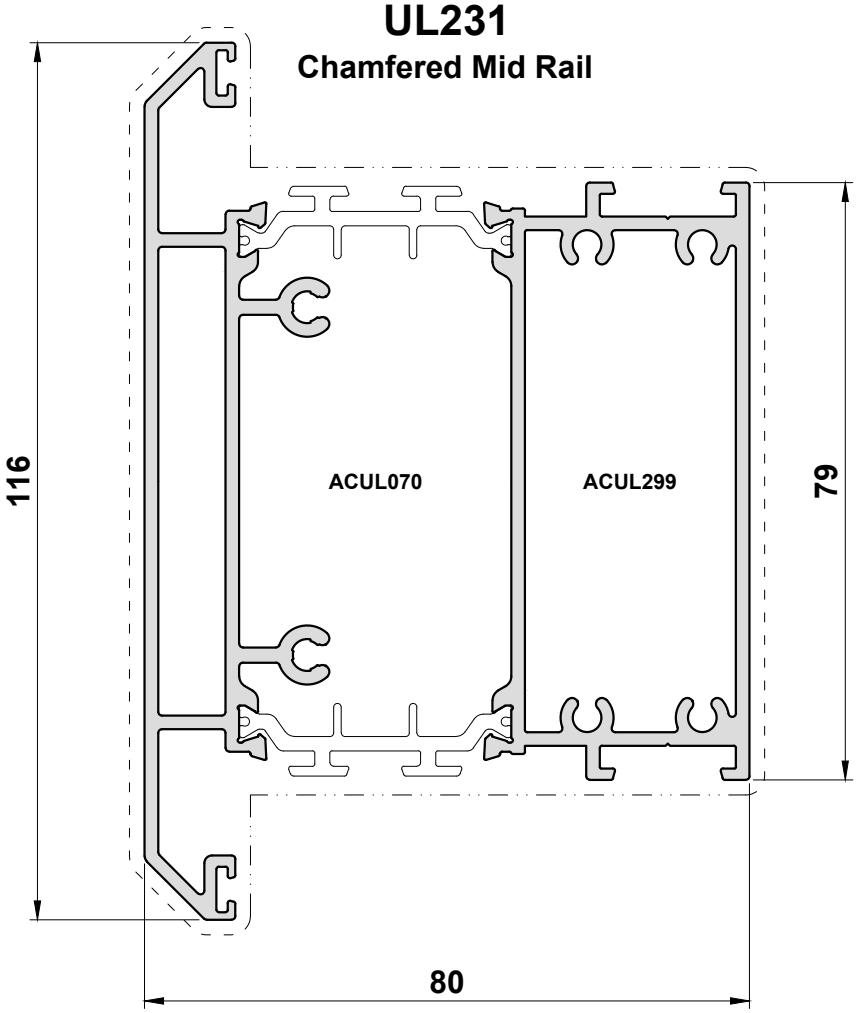

Primary Visible Side - - - - - - - - - - - - - - - - - - Secondary Visible Side — · · — · · — · · — · · — · · — · · — · · —

UL048

90° Corner Post

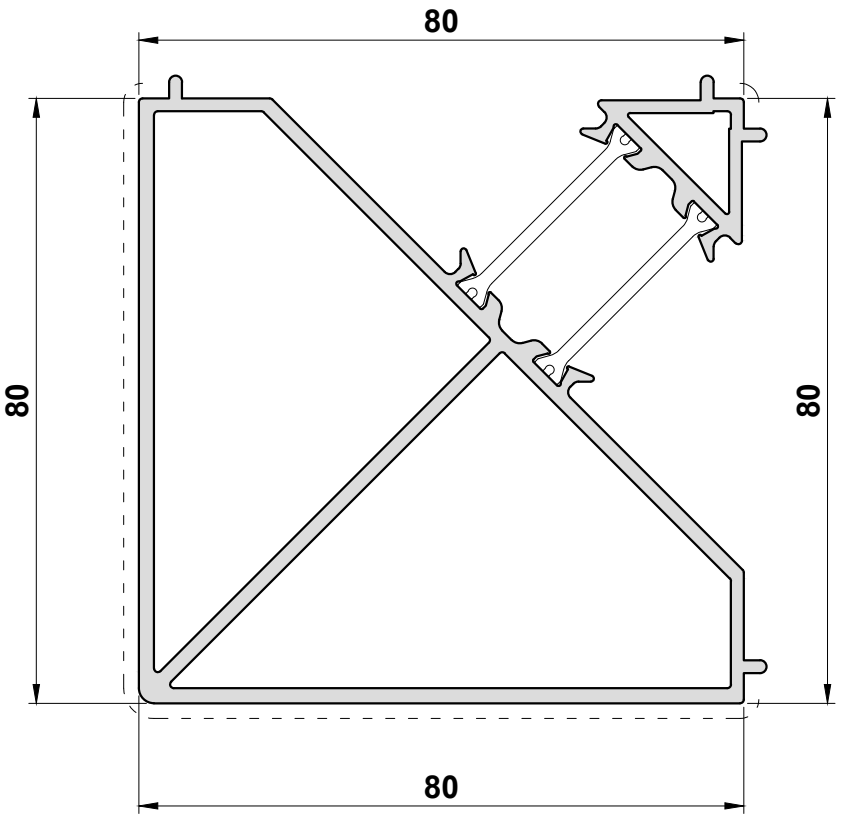

Primary Visible Side - - - - - - - - - - - - - - - - - - Secondary Visible Side — · — · — · — · — · — · — · —

UL063

24mm Glazing Bead

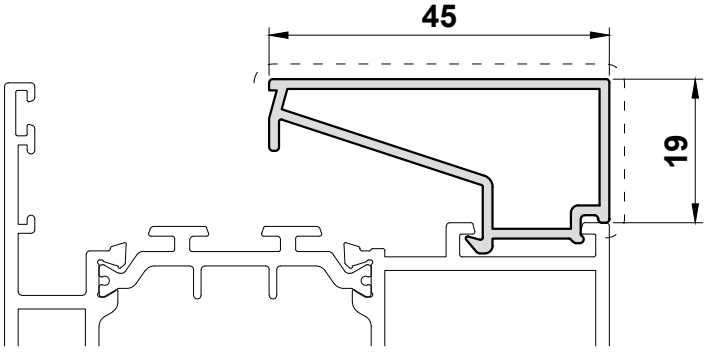

UL064

28mm Glazing Bead

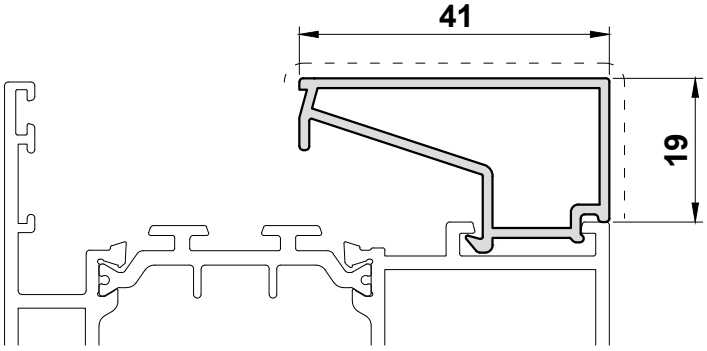

UL065

32mm Glazing Bead

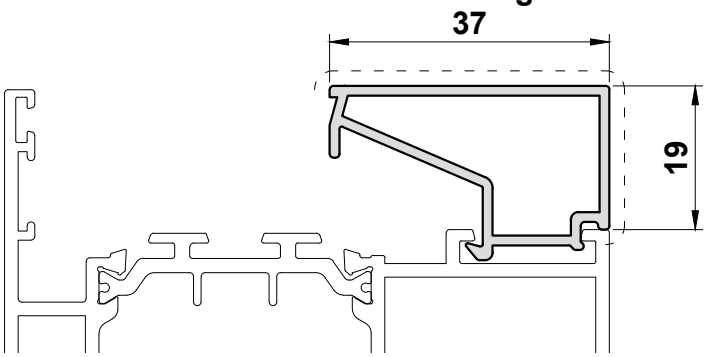

Primary Visible Side - - - - - - - - - - - - - - - - - - Secondary Visible Side — · · — · · — · · — · · — · · — · · — · · —

UL066

36mm Glazing Bead

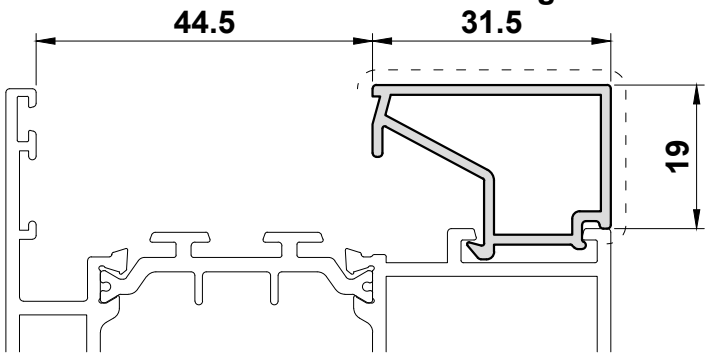

UL067

40mm Glazing Bead

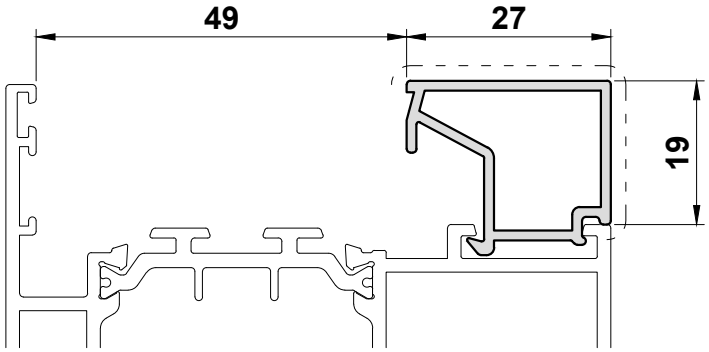

Primary Visible Side - - - - - - - - - - - - - - - - Secondary Visible Side — · — · — · — · — · — · — · —

UL068

36mm Glazing Bead

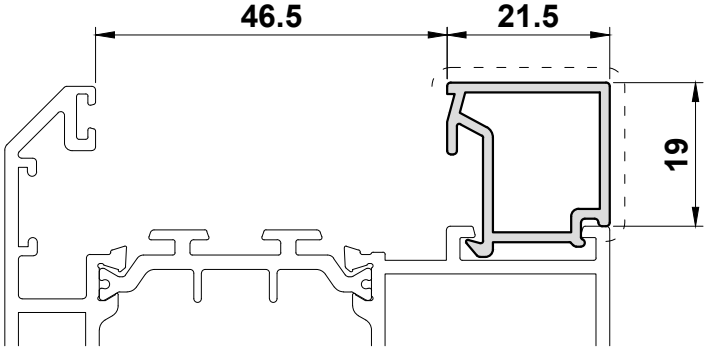

UL069

40mm Glazing Bead

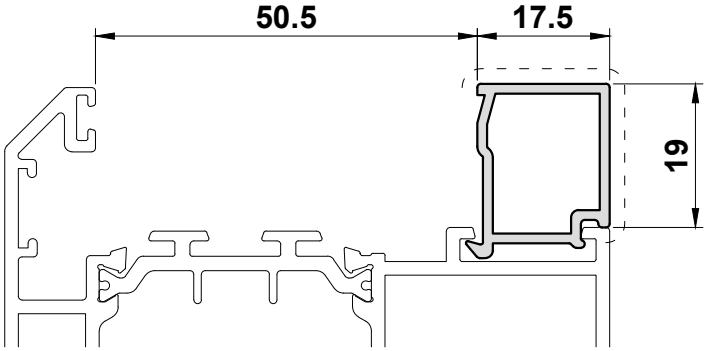

UL078

36mm Glazing Bead

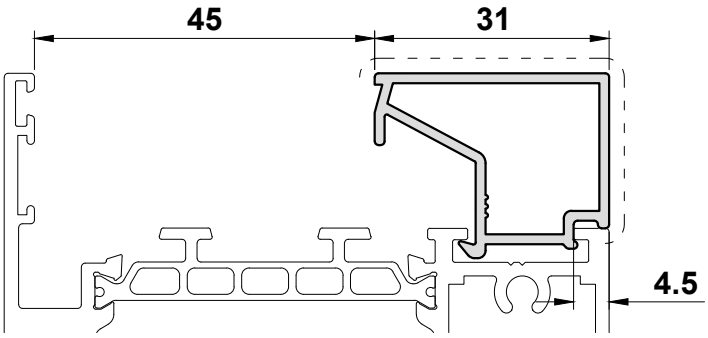

Primary Visible Side - - - - - - - - - - - - - - - - - - Secondary Visible Side — · — · — · — · — · — · — · —

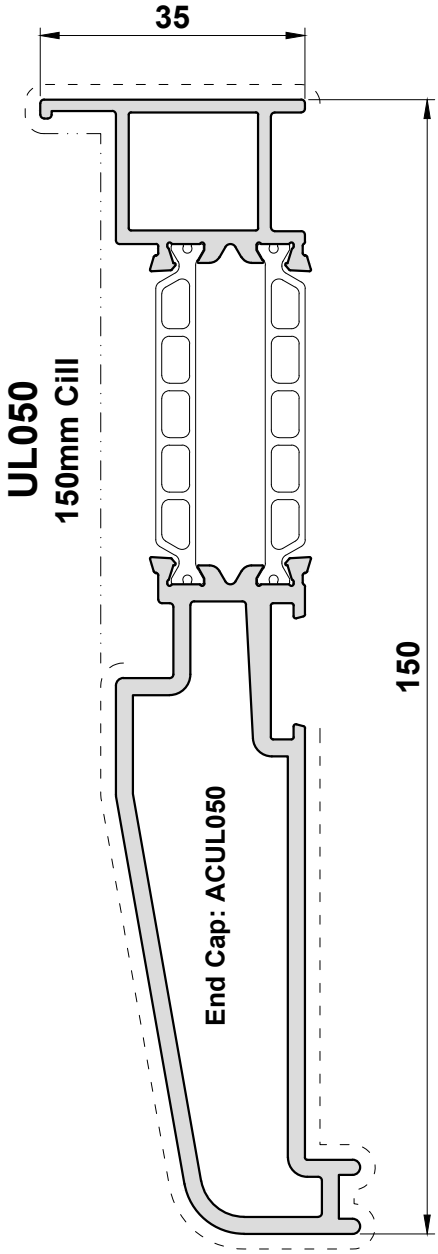

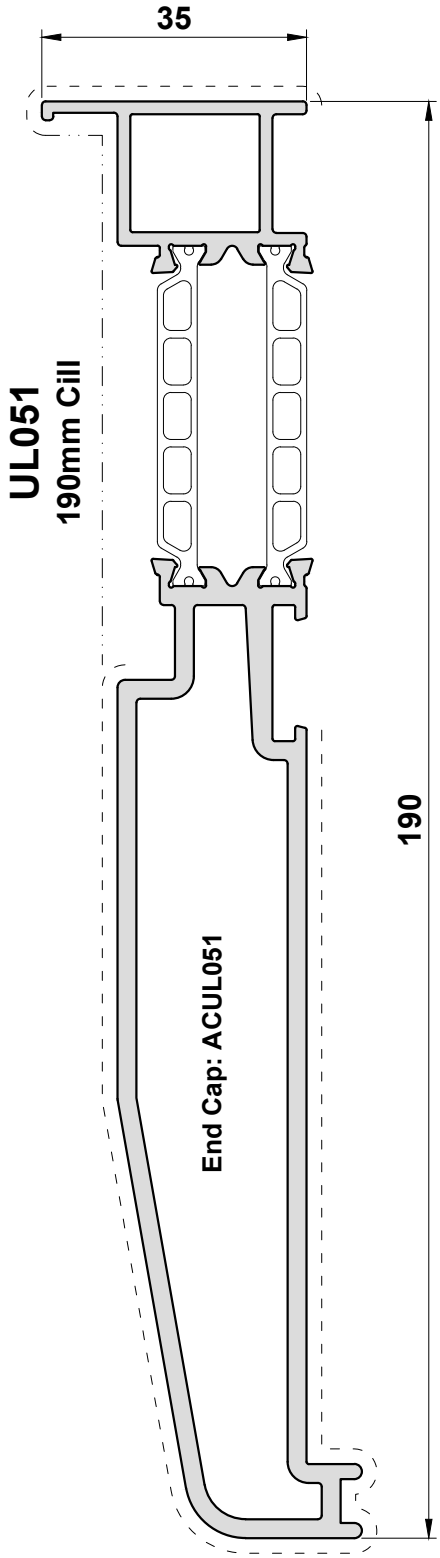

Primary Visible Side - - - - - - - - - - - - - - - - - - Secondary Visible Side — · · — · · — · · — · · — · · — · · — · · —

UL055

18mm Coupler

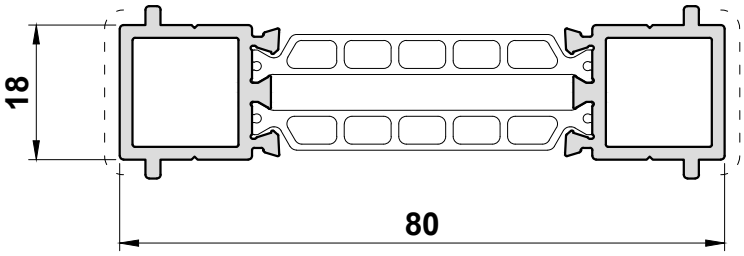

UL056

35mm Head Extension

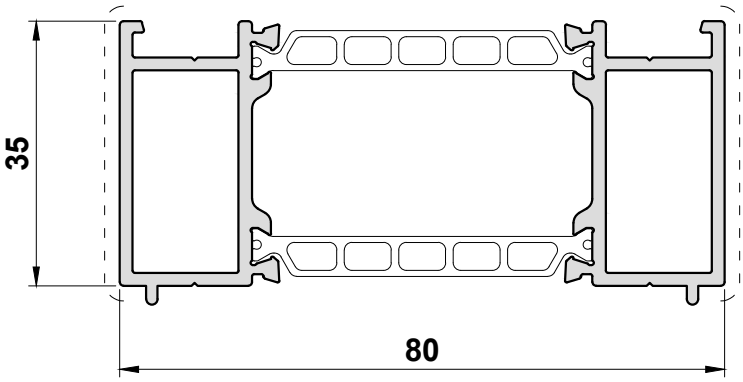

Primary Visible Side - - - - - - - - - - - - - - - - Secondary Visible Side — · — · — · — · — · — · — · —

UL204

Flat Fixed Light

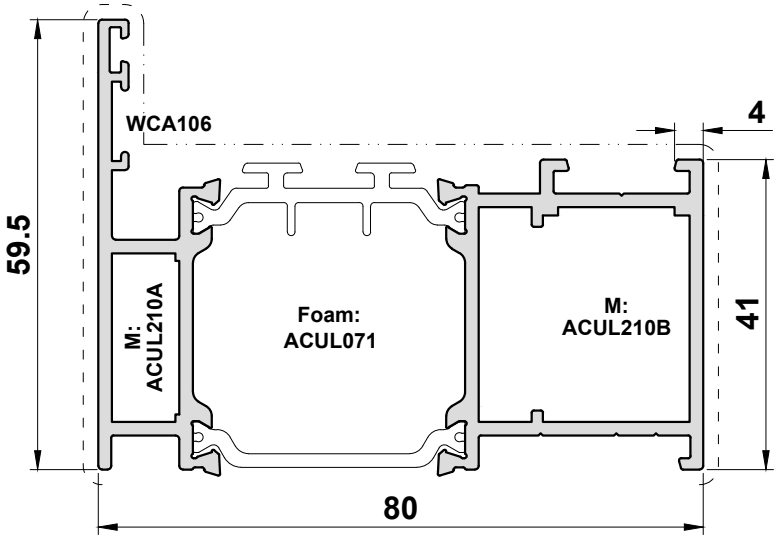

UL206

Chamfered Fixed Light

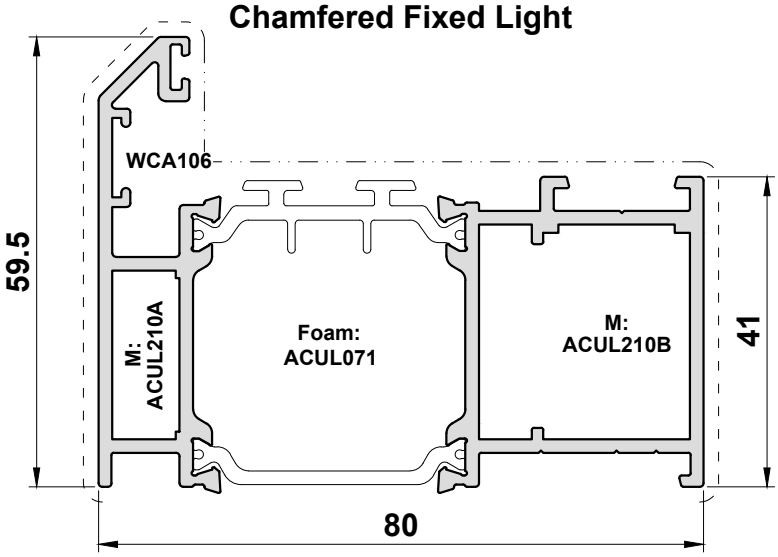

Section B

Accessories

Photos & Drawings

Punch Tool

Part Number : ACUL900

Usage

- Station 1, 2, 3 & 4 - Creates preps in outer frame and sashes for mechanical corner joints.
- Station 5 - Creates hole for joining outer frame to low threshold.

Maintenance

- Apply ACVL158 to pillars and bushes periodically.
- Tool should be returned to Smart Engineering for any service/ refurbishment.

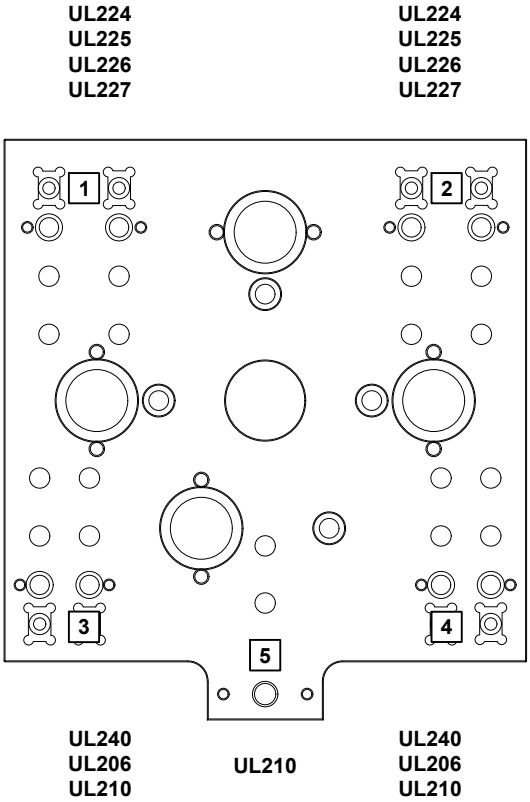

Spray Oil: ACVL158

Punch Tool Base : ACIP529

Countersunk Screws

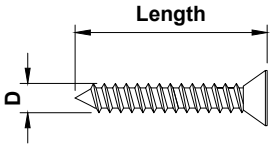

Gauge	'D' (mm)
No.6	3.5
No.7	3.8
No.8	4
No.10	5
No.12	6

Part Number	Gauge	X	Length	Description	Box Qty.
ACUN3530	No.6	X	5/8"	Countersunk Pozi Self Tapper S/S	100
MUA025SSZ	No.6	X	1"	Countersunk Pozi Self Tapper S/S	100
ACET067	No.7	X	1/2"	Countersunk Pozi Self Tapper S/S	100
ACET060	No.7	X	1"	Countersunk Pozi Self Tapper S/S	100
ACET066	No.7	X	1 1/2"	Countersunk Pozi Self Tapper S/S	100
MUA067SSZ	No.7	X	2"	Countersunk Pozi Self Tapper S/S	100
ACUN3544	No.7	X	3/4"	Countersunk Pozi Self Tapper S/S	100
ACET064	No.8	X	5/8"	Countersunk Pozi Self Tapper S/S	100
ACUN3512	No.8	X	1 1/4"	Countersunk Pozi Self Tapper S/S	100
ACUN3513	No.8	X	1 3/4"	Countersunk Pozi Self Tapper S/S	100
ACET072	No.8	X	2 1/2"	Countersunk Pozi Self Tapper S/S	100
ACET490	4.3mm	X	16mm	Countersunk PH2 Polyamide Screw	1000
ACET290	4.3mm	X	20mm	Countersunk PH2 Polyamide Screw	100
ACET390	4.3mm	X	25mm	Countersunk PH2 Polyamide Screw	200
ACET190	4.3mm	X	45mm	Countersunk PH2 Polyamide Screw	1000
ACVS062	4.3mm	X	65mm	Countersunk PH2 Polyamide Screw	1000
ACET048	No.10	X	3/8"	Countersunk Pozi Self Tapper S/S	100
ACIM062	No.10	X	1 1/4"	Countersunk Pozi Self Tapper S/S	100
ACET062	No.10	X	2"	Countersunk Pozi Self Tapper S/S	100
ACET076	No.10	X	2 1/2"	Countersunk Pozi Self Tapper S/S	100

Pan Head Screws

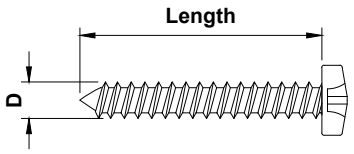

Gauge	'D' (mm)
No.6	3.5
No.7	3.8
No.8	4
No.10	5
No.12	6

Part Number	Gauge	X	Length	Description	Box Qty.
ACET068	No.8	X	3/8"	Pozi Flange AB	100
ACET063	No.8	X	1/2"	Pan Head Self Tapper	100
ACET070	No.8	X	1/2"	Pozi Flange Self Tapper S/S	100
ACUN3535	No.8	X	5/8"	Pan Head Pozi S/S	100
ACET099	No.8	X	3/4"	Pozi Flange Self Tapper S/S	100
ACDR050	4.8mm	X	32mm	Pan Head Pozi S/S	200
PUA028	No.10	X	1"	Pan Head Pozi S/S	100
ACDR052	No.10	X	2"	Pan Head Self Tapper S/S	200
ACET079	No.10	X	2 1/2"	Pan Head Pozi S/S	100
ACW20160	No.12	X	1"	Flange Head Self Tapper S/S	100
ACMC109	6.3mm	X	38mm	DIN7981 - Pan Head Self Tapper	200

Machine Screws

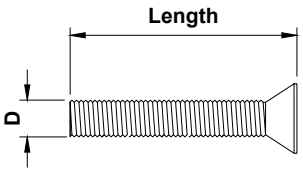

Thread	'D' (mm) Nominal
M4	4
M5	5
M6	6
M8	8
M10	10

Part Number	Thread	X	Length	Description	Box Qty.
ACET122	M4	X	10	CSK Pozi Machine Screw	100
ACET123	M4	X	20	CSK Pozi Machine Screw	100
ACDV264	M4	X	35	CSK Pozi Machine Screw	100
ACSG071	M4	X	40	CSK Pozi Machine Screw	100
ACDV266	M4	X	45	CSK Pozi Machine Screw	100
ACDV262	M4	X	50	CSK Pozi Machine Screw	100
ACDV265	M4	X	60	CSK Pozi Machine Screw	100
ACDR051	M5	X	10	CSK Pozi Machine Screw	100
ACET069	M5	X	12	CSK Pozi Machine Screw	100
HEA132	M5	X	16	CSK Pozi Machine Screw	100
WCA134	M5	X	20	CSK Pozi Machine Screw	100
WCA143	M5	X	25	CSK Pozi Machine Screw	50
ACVS061	M5	X	40	CSK Pozi Machine Screw	100
ACET133	M5	X	50	CSK Pozi Machine Screw	100
ACET220	M5	X	60	CSK Pozi Machine Screw	100
ACET238	M5	X	70	CSK Pozi Machine Screw	100
ACMX861	M5	X	80	DIN965 - CSK Machine Screw	10
ACMX862	M5	X	90	DIN965 - CSK Machine Screw	10
ACUN3503	M6	X	10	CSK Socket Machine Screw	24
ACUN3501	M6	X	13	CSK Flange Socket Machine Screw	48
ACMX852	M6	X	16	DIN965 - CSK Machine Screw	10
HEA390	M6	X	16	CSK Socket Machine Screw	32
ACET235	M6	X	60	CSK Pozi Machine Screw	100
ACET237	M6	X	70	CSK Pozi Machine Screw	100

Glazing Gaskets

Retaining Gasket

Commonly known as an E Gasket. Retaining gaskets create a seal between the Glass and the Aluminium Profile.

High Line	2mm		**ACVG231**
			200m
			BL
	3mm		**ACVG31**
			200m
			BL
	4mm		**ACVG131**
			100m
			BL
Low Line	2mm		**ACET843**
			200m
			BL
	3mm		**ACET842**
			200m
			BL
	3mm		**ACVG31N**
			200m
			BL
	4mm		**ACET841**
			200m
			BL
	4mm	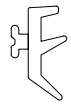	**ACET835**
			200m
			BL

Thickness	Drawing 1:1	**Part number**
		Coil length
		Available Colours

Wedge Gasket

Wedge Gaskets help to hold the bead in place by providing tension between the bead and the glazing unit.

High Line	3mm		**ACVG32**
			100m
			BL
	3mm		**ACVG32N**
			100m
			BL
	4mm		**ACVG33**
			100m
			BL
	4mm		**ACVG33N**
			100m
			BL
	5mm		**ACVG34**
			100m
			BL
	5mm		**ACVG34N**
			100m
			BL
	6mm		**ACVG340**
			100m
			BL
	6mm		**ACVG340N**
			100m
			BL
	6mm - 8mm		**ACUN036**
			100m
			BL
Low Line	4mm - 3mm		**ACW20038**
			50m
			BL
	5mm		**ACET840N**
			200m
			BL

Locks

	Lock	Hand	Description	D[1]	D[2]	Sash Height Limits Min	Sash Height Limits Max	Lock Usage Prim.	Lock Usage Sec.	Keep Incl.
Lift Lever	ACUL377	LH	Short Lift Lever Lock - Fingerbolt	529	766	1820	2029	✓		✓
	ACUL378	RH	Short Lift Lever Lock - Fingerbolt	529	766	1820	2029	✓		✓
	ACUL272	LH	Standard Lift Lever Lock - Fingerbolt	743	766	2030	2230	✓		✓
	ACUL273	RH	Standard Lift Lever Lock - Fingerbolt	743	766	2030	2230	✓		✓
	ACUL374	LH	Tall Lift Lever Lock - Fingerbolt	943	766	2231	2450	✓		✓
	ACUL375	RH	Tall Lift Lever Lock - Fingerbolt	943	766	2231	2450	✓		✓
Slam	ACUL360	LH	Short Slam Lock - Fingerbolt	529	766	1820	2029	✓		✓
	ACUL361	RH	Short Slam Lock - Fingerbolt	529	766	1820	2029	✓		✓
	ACUL280	LH	Standard Slam Lock - Fingerbolt	743	766	2030	2230	✓		✓
	ACUL281	RH	Standard Slam Lock - Fingerbolt	743	766	2030	2230	✓		✓
	ACUL380	LH	Tall Slam Lock - Fingerbolt	943	766	2231	2450	✓		✓
	ACUL381	RH	Tall Slam Lock - Fingerbolt	943	766	2231	2450	✓		✓
Key Wind	ACUL362	LH	Short Key Wind Lock - Fingerbolt	529	766	1820	2029	✓		✓
	ACUL363	RH	Short Key Wind Lock - Fingerbolt	529	766	1820	2029	✓		✓
	ACUL282	LH	Standard Key Wind Lock - Fingerbolt	743	766	2030	2230	✓		✓
	ACUL283	RH	Standard Key Wind Lock - Fingerbolt	743	766	2030	2230	✓		✓
	ACUL383	LH	Tall Key Wind Lock - Fingerbolt	943	766	2231	2450	✓		✓
	ACUL383	RH	Tall Key Wind Lock - Fingerbolt	943	766	2231	2450	✓		✓
Lift Lever	ACUL277	LH	Primary Double Door Lock	473	542	980	2450	✓		✓
	ACUL278	RH	Primary Double Door Lock	473	542	980	2450	✓		✓
	ACUL279	-	Secondary Door Lock	-	-	980	2450		✓	✓

[1] Fingerbolt Adaptor, Rods, Guides and Fingerbolt Keeps are sold separately. Please see page overleaf.
[2] Double Door Primary Shootbolts and Shootbolt Extensions are sold separately. Please see page overleaf.
[3] Lock Limitations may exceed Smart Systems tested limitations and may not meet Kitemark requirements.

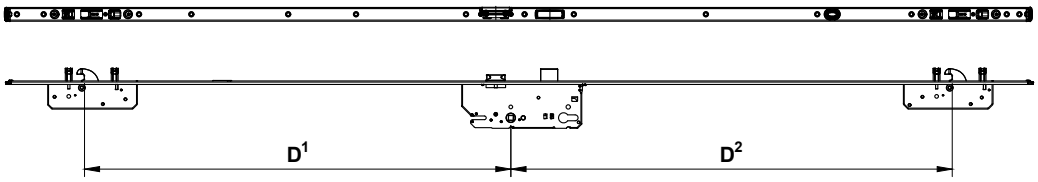

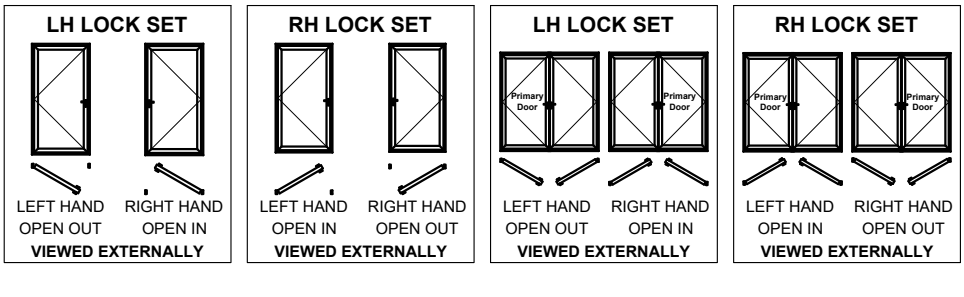

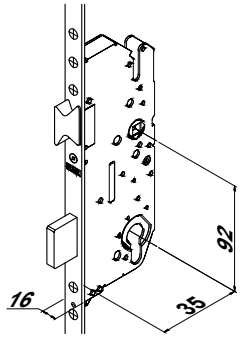

Fingerbolt Locking Accessories				
Part Number	**Description**	**pack**	**Unit**	**Image**
ACPD844	35mm Backset Fingerbolt Adaptor	1	ea.	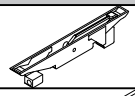
ACPD846	1000mm Locking Rod	1	ea.	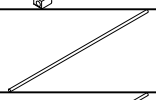
ACPD847	1250mm Locking Rod	1	ea.	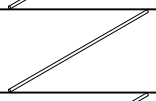
ACPD848	1500mm Locking Rod	1	ea.	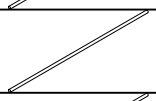
ACPD849	2000mm Locking Rod	1	ea.	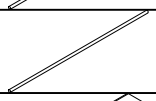
ACUL390	Fingerbolt Keep	1	ea.	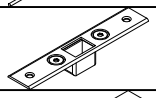
ACUL242	Fingerbolt Guide	1	ea.	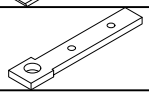

Lift Lever Locking Accessories				
Part Number	**Description**	**pack**	**Unit**	**Image**
ACUL279	Double Door Keep	2	pair	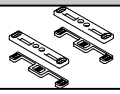
ACDV737	Bottom Shootbolt	1	ea.	
ACDV738	Top Shootbolt	1	ea.	
ACDV742	200mm Extension for ACDV738	1	ea.	
ACDV744	400mm Extension for ACDV738	1	ea.	

Hinges

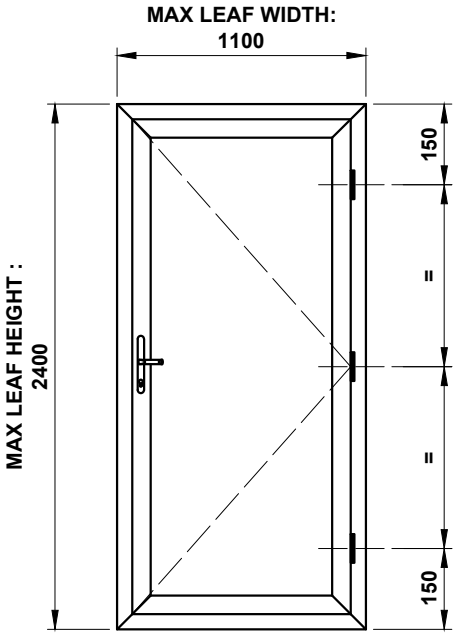

Hinge	Max Weight	Location	Colours
ACUL250	100kg	Top, Middle, Bottom	BL, KL, MC, W, MF

Image	Part Code	Pack	Unit	Application	Colour	
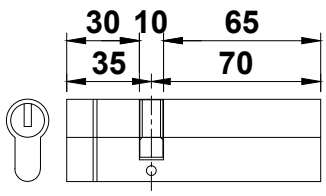	**ACCY3570S3** **35/70 TS007 3 Star Euro Profile Cylinder** **Supplied with 3 Keys**	**1**	**each**	**Open Out**	MF SA KL HP SSC SMC W Z PC	
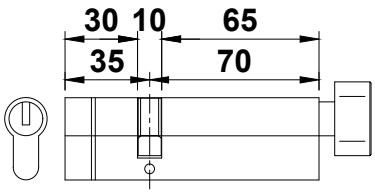	**ACCY3570TTS3** **35/70 TS007 3 Star Euro Profile Cylinder with Thumbturn** **Supplied with 3 Keys**	**1**	**each**	**Open Out**	MF SA KL HP SSC SMC W Z PC	
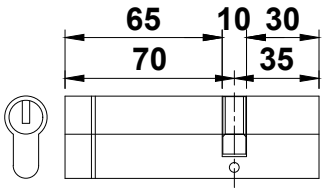	**ACCY7035S3** **70/35 TS007 3 Star Euro Profile Cylinder** **Supplied with 3 Keys**	**1**	**each**	**Open In**	MF SA KL HP SSC SMC W Z PC	
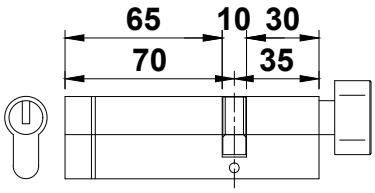	**ACCY7035TTS3** **70/35 TS007 3 Star Euro Profile Cylinder with Thumbturn** **Supplied with 3 Keys**	**1**	**each**	**Open In**	MF SA KL HP SSC SMC W Z PC	
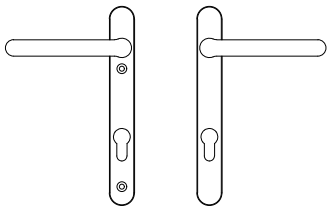	**ACDV251** **Lever / Lever Handle Set**	**1**	**pair**		MF ✓ SA KL ✓ HP SSC SMC W ✓ Z ✓ PC ✓	

T-BARS
ACVG65=2.5mm
ACVG66=3.0mm
ACVL150=4.0mm

Screw (Grub)

MF = Mill Finish
SA = Silver Anodised
KL = Basic Colour
HP = Special Colour
SSC = Smooth Satin Chrome
SMC = Smokey Chrome
PC = Polished Chrome
W = White
Z = Black

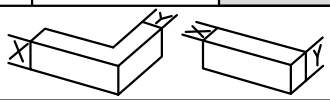

Image	Part Code	Pack	Unit	Application	Colour	
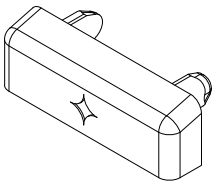	**ACET131** **PVC Drainage Cap**	**100**	**pack**		MF	
					SA	
					KL	
					HP	
					SSC	
					SMC	
					W	✓
					Z	✓
					PC	
	**ACET149** **Slimline Restrictor**	**1**	**each**	**UL210** **UL224** **UL225** **UL226** **UL227**	MF	
					SA	
					KL	
					HP	
					SSC	
					SMC	
					W	
					Z	
					PC	
	**ACET252** **Hinge Protector Kit**	**1**	**kit**		MF	
					SA	
					KL	
					HP	
					SSC	
					SMC	
					W	
					Z	
					PC	
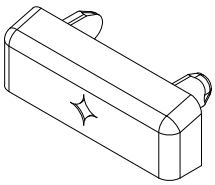	**ACET432** **Colour Match Drainage Cover Cap**	**8**	**pack**		MF	✓
					SA	✓
					KL	✓
					HP	✓
					SSC	
					SMC	
					W	✓
					Z	✓
					PC	
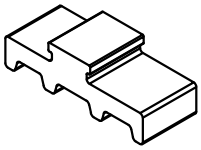	**ACET855** **Insulation**	**100**	**m**	**UL224** **UL226**	MF	
					SA	
					KL	
					HP	
					SSC	
					SMC	
					W	
					Z	
					PC	

T-BARS
ACVG65=2.5mm
ACVG66=3.0mm
ACVL150=4.0mm

Screw (Grub)

MF = Mill Finish
SA = Silver Anodised
KL = Basic Colour
HP = Special Colour
SSC = Smooth Satin Chrome
SMC = Smokey Chrome
PC = Polished Chrome
W = White
Z = Black

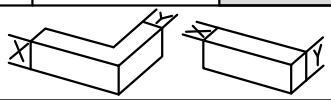

Image	Part Code	Pack	Unit	Application	Colour	
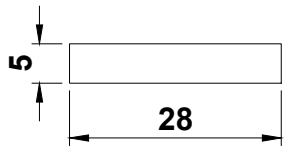	**ACET4082** **Foam**	**100**	**m**	**UL225** **UL227**	MF	
					SA	
					KL	
					HP	
					SSC	
					SMC	
					W	
					Z	
					PC	
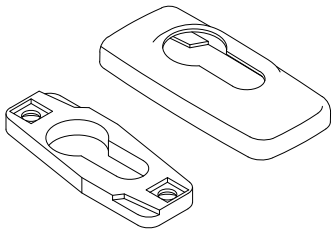	**ACMX208** **Escutcheon** **(Protection / Shield)**	**1**	**each**		MF	✓
					SA	✓
					KL	✓
					HP	✓
					SSC	
					SMC	
					W	
					Z	✓
					PC	
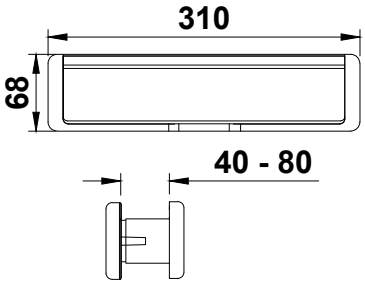	**ACPD6051** **Letterplate** **Available in:** **- Satin** **- Black**	**1**	**each**	**UL230** **UL231**	MF	
					SA	
					KL	
					HP	
					SSC	
					SMC	
					W	
					Z	
					PC	
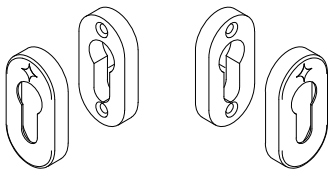	**ACSM015** **Oval Escutcheon** **Stainless Steel**	**1**	**Pair**	**UL224** **UL225** **UL226**	MF	
					SA	
					KL	
					HP	
					SSC	
					SMC	
					W	
					Z	
					PC	
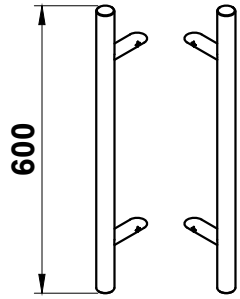	**ACSM020** **Off-Set 600mm Bar Handle** **Stainless Steel**	**1**	**Pair**	**UL224** **UL225** **UL226**	MF	
					SA	
					KL	
					HP	
					SSC	
					SMC	
					W	
					Z	
					PC	

T-BARS
ACVG65=2.5mm
ACVG66=3.0mm
ACVL150=4.0mm

Screw (Grub)

MF = Mill Finish
SA = Silver Anodised
KL = Basic Colour
HP = Special Colour
SSC = Smooth Satin Chrome
SMC = Smokey Chrome
PC = Polished Chrome
W = White
Z = Black

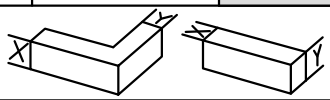

Image	Part Code	Pack	Unit	Application	Colour
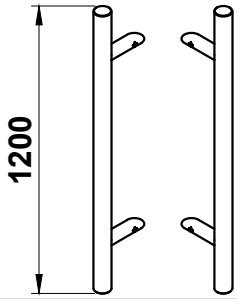	**ACSM021** **Off-Set 1200mm Bar Handle Stainless Steel**	1	Pair	UL224 UL225 UL226	MF SA KL HP SSC SMC W Z PC
	**ACSM030** **Single Sided Fixing for Bar Handles**	1	Pair	ACSM037 ACSM038 UL224 UL225 UL226	MF SA KL HP SSC SMC W Z PC
	**ACSM031** **Back to Back Fixing for Bar Handles**	1	Pair	ACSM037 ACSM038 UL224 UL225 UL226	MF SA KL HP SSC SMC W Z PC
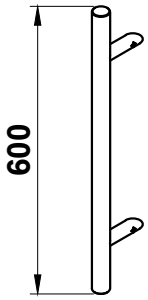	**ACSM037** **Off-Set 600mm Bar Handle Stainless Steel**	1	each	ACSM030 ACSM031 UL224 UL225 UL226	MF SA KL HP SSC SMC W Z PC
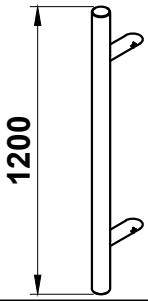	**ACSM038** **Off-Set 1200mm Bar Handle Stainless Steel**	1	each	ACSM030 ACSM031 UL224 UL225 UL226	MF SA KL HP SSC SMC W Z PC

T-BARS
ACVG65=2.5mm
ACVG66=3.0mm
ACVL150=4.0mm

Screw (Grub)

MF = Mill Finish
SA = Silver Anodised
KL = Basic Colour
HP = Special Colour
SSC = Smooth Satin Chrome
SMC = Smokey Chrome
PC = Polished Chrome
W = White
Z = Black

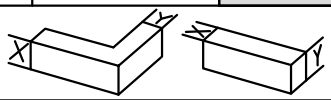

Visotherm Door

ACCESSORIES : PHOTOS & DRAWINGS

Image	Part Code	Pack	Unit	Application	Colour	
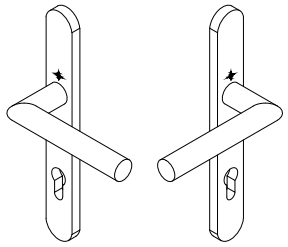	**ACSM056** **Stainless Steel Lever Handle on Oval Backplate 80mm Doors (Not Handed)**	1	Pair	UL224 UL225 UL226	MF SA KL HP SSC SMC W Z PC	
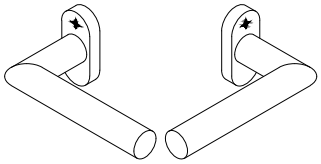	**ACSM057** **Stainless Steel Lever Handle on Oval Backplate 80mm Doors (Not Handed)** **Only Suitable for Slam & Key Wind Locks**	1	Pair	UL224 UL225 UL226	MF SA KL HP SSC SMC W Z PC	
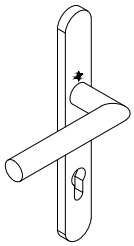	**ACSM058** **Stainless Steel Lever Handle on Oval Backplate - Single Sided (Not Handed)**	1	each	UL224 UL225 UL226	MF SA KL HP SSC SMC W Z PC	
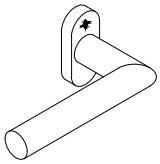	**ACSM059** **Stainless Steel Lever Handle on Oval Backplate - Single Sided (Not Handed)** **Only Suitable for Slam & Key Wind Locks**	1	each	UL224 UL225 UL226	MF SA KL HP SSC SMC W Z PC	
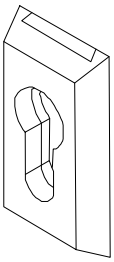	**ACSZ400** **Safety Lock Plate** **Door Handle - External**	1	each		MF SA KL HP SSC SMC W Z PC	 ✓ ✓ ✓ ✓ ✓

T-BARS
ACVG65=2.5mm
ACVG66=3.0mm
ACVL150=4.0mm

Screw (Grub)

MF = Mill Finish
SA = Silver Anodised
KL = Basic Colour
HP = Special Colour
SSC = Smooth Satin Chrome
SMC = Smokey Chrome
PC = Polished Chrome
W = White
Z = Black

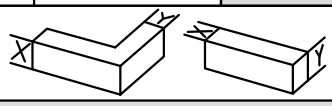

Image	Part Code	Pack	Unit	Application	Colour	
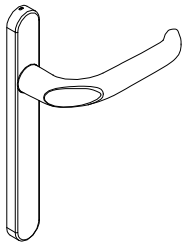	**ACSZ800** **External Lever Handle Without Cylinder**	1	each	ACSZ55* ACSZ801 ACSZ803 ACSZ830 ACMX309	MF SA KL HP SSC SMC W Z PC	 ✓ ✓ ✓ ✓ ✓
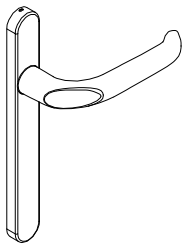	**ACSZ801** **Internal Lever Handle Without Cylinder**	1	each	ACSZ55* ACSZ800 ACSZ803 ACMX309	MF SA KL HP SSC SMC W Z PC	 ✓ ✓ ✓ ✓ ✓
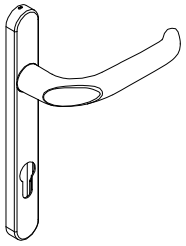	**ACSZ802** **External Handle With Cylinder**	1	each	ACSZ55* ACSZ800 ACSZ803 ACMX309	MF SA KL HP SSC SMC W Z PC	 ✓ ✓ ✓ ✓ ✓
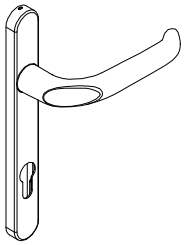	**ACSZ803** **Internal Handle With Cylinder**	1	each	ACSZ55* ACSZ801 ACSZ803 ACMX309	MF SA KL HP SSC SMC W Z PC	 ✓ ✓ ✓ ✓ ✓
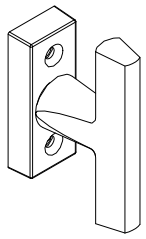	**ACSZ827** **Internal 'T' Door Handle With Short Backplate**	1	each		MF SA KL HP SSC SMC W Z PC	 ✓ ✓ ✓ ✓ ✓

T-BARS
ACVG65=2.5mm
ACVG66=3.0mm
ACVL150=4.0mm

Screw (Grub)

MF = Mill Finish
SA = Silver Anodised
KL = Basic Colour
HP = Special Colour
SSC = Smooth Satin Chrome
SMC = Smokey Chrome
PC = Polished Chrome
W = White
Z = Black

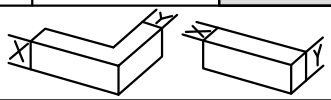

Image	Part Code	Pack	Unit	Application	Colour	
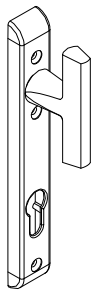	**ACSZ830** **Internal 'T' Door Handle With Long Backplate**	**1**	**each**		MF	
					SA	✓
					KL	✓
					HP	✓
					SSC	
					SMC	
					W	
					Z	✓
					PC	✓
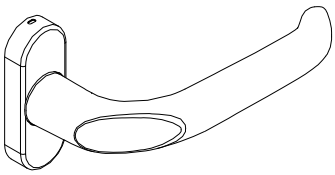	**ACSZ836** **Internal Door Handle With Short Backplate**	**1**	**each**		MF	
					SA	✓
					KL	✓
					HP	✓
					SSC	
					SMC	
					W	
					Z	✓
					PC	✓
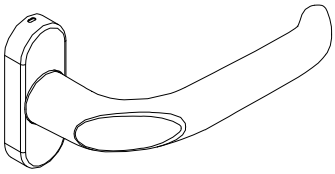	**ACSZ837** **External Door Handle With Short Backplate**	**1**	**each**		MF	
					SA	✓
					KL	✓
					HP	✓
					SSC	
					SMC	
					W	
					Z	✓
					PC	✓
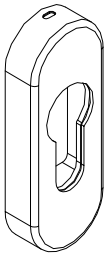	**ACSZ839** **Escutcheon (Cylinder Cover)**	**1**	**each**		MF	
					SA	✓
					KL	✓
					HP	✓
					SSC	
					SMC	
					W	
					Z	✓
					PC	✓
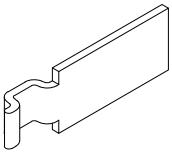	**ACUL025** **Anti Twist Clip**	**1**	**each**	**UL230** **UL232** **UL290** **UL292**	MF	
					SA	
					KL	
					HP	
					SSC	
					SMC	
					W	
					Z	
					PC	

T-BARS
ACVG65=2.5mm
ACVG66=3.0mm
ACVL150=4.0mm

Screw (Grub)

MF = Mill Finish
SA = Silver Anodised
KL = Basic Colour
HP = Special Colour
SSC = Smooth Satin Chrome
SMC = Smokey Chrome
PC = Polished Chrome
W = White
Z = Black

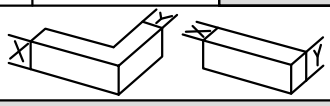

Visotherm Door

ACCESSORIES : PHOTOS & DRAWINGS

Image	Part Code	Pack	Unit	Application	Colour	
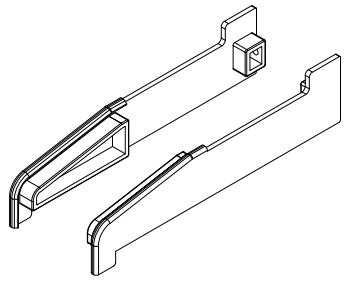	**ACUL050** **Cast Cill End Cap**	**10**	**pair**	**UL050**	MF SA KL HP SSC SMC W Z PC	 ✓ ✓ ✓ ✓
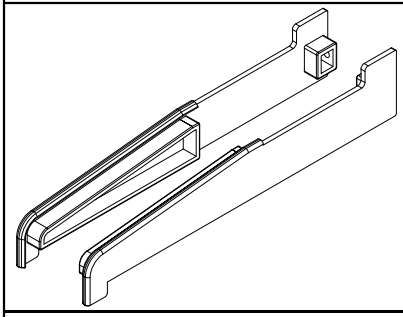	**ACUL051** **Cast Cill End Cap**	**10**	**pair**	**UL051**	MF SA KL HP SSC SMC W Z PC	 ✓ ✓ ✓ ✓
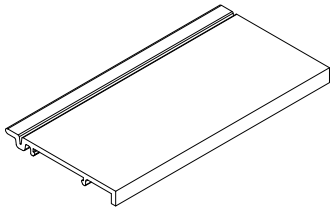	**ACUL064** **52mm Bridge packer**	**10**	**pack**	**UL204** **UL206** **UL224** **UL226** **UL230** **UL231**	MF SA KL HP SSC SMC W Z PC	 ✓
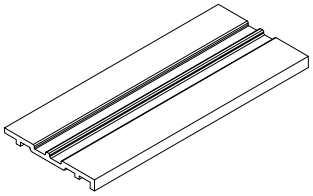	**ACUL065** **42mm Bridge packer**	**10**	**pack**	**UL304** **UL306** **UL324** **UL326** **UL330** **UL331**	MF SA KL HP SSC SMC W Z PC	 ✓
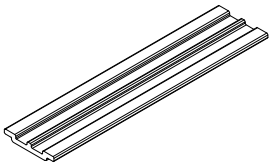	**ACUL066** **23mm Bridge packer**	**10**	**pack**	**UL225** **UL227** **UL325** **UL327**	MF SA KL HP SSC SMC W Z PC	 ✓

T-BARS
ACVG65=2.5mm
ACVG66=3.0mm
ACVL150=4.0mm

Screw (Grub)

MF = Mill Finish
SA = Silver Anodised
KL = Basic Colour
HP = Special Colour
SSC = Smooth Satin Chrome
SMC = Smokey Chrome
PC = Polished Chrome
W = White
Z = Black

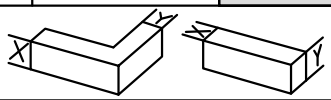

ISSUED: OCTOBER 2022

Visotherm Door

ACCESSORIES : PHOTOS & DRAWINGS

Image	Part Code	Pack	Unit	Application	Colour
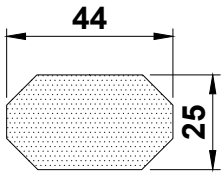	**ACUL067** **Infill Foam**	**1.25**	**m**	**UL210**	MF SA KL HP SSC SMC W Z PC
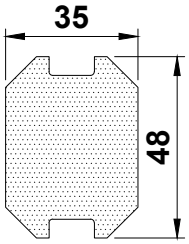	**ACUL068** **Infill Foam**	**1.25**	**m**	**UL224** **UL226**	MF SA KL HP SSC SMC W Z PC
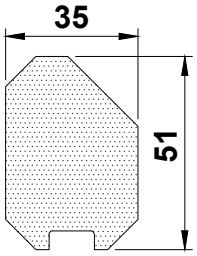	**ACUL069** **Infill Foam**	**1.25**	**m**	**UL225** **UL227**	MF SA KL HP SSC SMC W Z PC
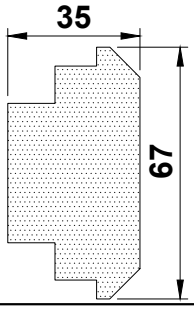	**ACUL070** **Infill Foam**	**1.25**	**m**	**UL230** **UL231**	MF SA KL HP SSC SMC W Z PC
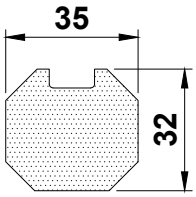	**ACUL071** **Infill Foam**	**1.25**	**m**	**UL204** **UL206**	MF SA KL HP SSC SMC W Z PC

T-BARS
ACVG65=2.5mm
ACVG66=3.0mm
ACVL150=4.0mm

Screw (Grub)

MF = Mill Finish
SA = Silver Anodised
KL = Basic Colour
HP = Special Colour
SSC = Smooth Satin Chrome
SMC = Smokey Chrome
PC = Polished Chrome
W = White
Z = Black

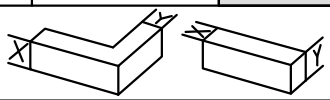

Visotherm Door

ACCESSORIES : PHOTOS & DRAWINGS

Image	Part Code	Pack	Unit	Application	Colour
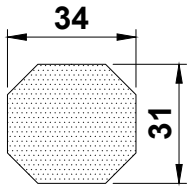	**ACUL077** **Infill Foam**	**1.25**	**m**	**UL310**	MF SA KL HP SSC SMC W Z PC
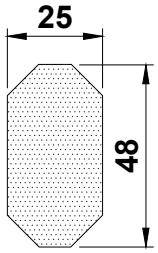	**ACUL078** **Infill Foam**	**1.25**	**m**	**UL324** **UL326**	MF SA KL HP SSC SMC W Z PC
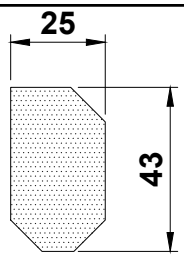	**ACUL079** **Infill Foam**	**1.25**	**m**	**UL325** **UL327**	MF SA KL HP SSC SMC W Z PC
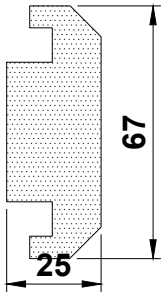	**ACUL080** **Infill Foam**			**UL330** **UL331**	MF SA KL HP SSC SMC W Z PC
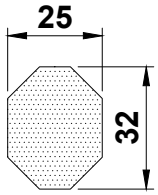	**ACUL081** **Infill Foam**			**UL304** **UL306**	MF SA KL HP SSC SMC W Z PC

T-BARS
ACVG65=2.5mm
ACVG66=3.0mm
ACVL150=4.0mm

Screw (Grub)

MF = Mill Finish
SA = Silver Anodised
KL = Basic Colour
HP = Special Colour
SSC = Smooth Satin Chrome
SMC = Smokey Chrome
PC = Polished Chrome
W = White
Z = Black

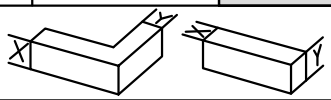

ISSUED: OCTOBER 2022

Image	Part Code	Pack	Unit	Application	Colour	
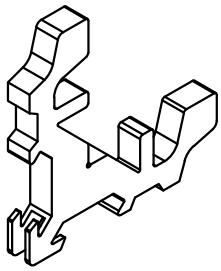	**ACUL210A** **Mechanical Cleat**	**24**	**pack**	**UL210** **UL310**	MF	✓
					SA	
					KL	
					HP	
					SSC	
					SMC	
					W	
					Z	
					PC	
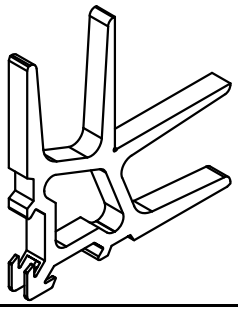	**ACUL210B** **Mechanical Cleat**	**24**	**pack**	**UL210** **UL310**	MF	✓
					SA	
					KL	
					HP	
					SSC	
					SMC	
					W	
					Z	
					PC	
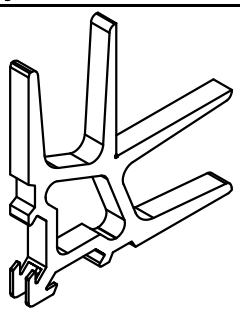	**ACUL224** **Mechanical Cleat**	**24**	**pack**	**UL224** **UL225** **UL226** **UL227** **UL324** **UL325** **UL326** **UL327**	MF	✓
					SA	
					KL	
					HP	
					SSC	
					SMC	
					W	
					Z	
					PC	
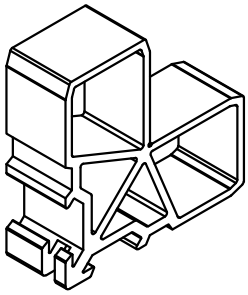	**ACUL225** **Mechanical Cleat**	**24**	**pack**	**UL224** **UL225** **UL226** **UL227** **UL324** **UL325** **UL326** **UL327**	MF	✓
					SA	
					KL	
					HP	
					SSC	
					SMC	
					W	
					Z	
					PC	
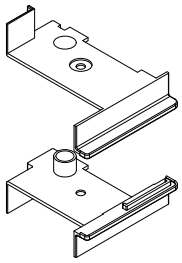	**ACUL244** **Full Frame Threshold** **Fingerbolt Mullion End Cap**	**1**	**pair**	**UL248** **UL210**	MF	
					SA	
					KL	
					HP	
					SSC	
					SMC	
					W	✓
					Z	✓
					PC	

T-BARS
ACVG65=2.5mm
ACVG66=3.0mm
ACVL150=4.0mm

Screw (Grub)

MF = Mill Finish
SA = Silver Anodised
KL = Basic Colour
HP = Special Colour
SSC = Smooth Satin Chrome
SMC = Smokey Chrome
PC = Polished Chrome
W = White
Z = Black

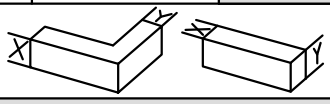

Image	Part Code	Pack	Unit	Application	Colour	
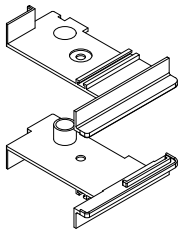	**ACUL245** **Rebated Threshold Fingerbolt Mullion End Cap**	**1**	**pair**	**UL248** **UL290** **UL292**	MF SA KL HP SSC SMC W Z PC	 ✓ ✓
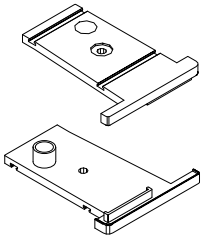	**ACUL246** **Ramped Threshold Fingerbolt Mullion End Cap**	**1**	**pair**	**UL248** **UL295**	MF SA KL HP SSC SMC W Z PC	 ✓ ✓
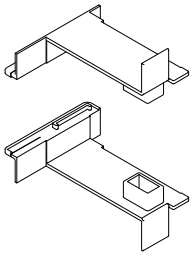	**ACUL247** **Full Frame Threshold Shootbolt Mullion End Cap**	**1**	**pair**	**UL247** **UL210**	MF SA KL HP SSC SMC W Z PC	 ✓ ✓
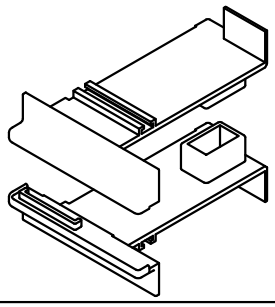	**ACUL248** **Rebated Threshold Shootbolt Mullion End Cap**	**1**	**pair**	**UL247** **UL290** **UL292**	MF SA KL HP SSC SMC W Z PC	 ✓ ✓
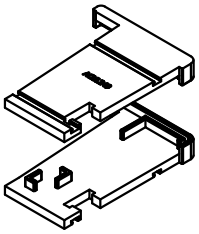	**ACUL249** **Ramped Threshold Shootbolt Mullion End Cap Kit**	**1**	**pair**	**UL247** **UL295** **UL296**	MF SA KL HP SSC SMC W Z PC	 ✓ ✓

T-BARS
ACVG65=2.5mm
ACVG66=3.0mm
ACVL150=4.0mm

Screw (Grub)

MF = Mill Finish
SA = Silver Anodised
KL = Basic Colour
HP = Special Colour
SSC = Smooth Satin Chrome
SMC = Smokey Chrome
PC = Polished Chrome
W = White
Z = Black

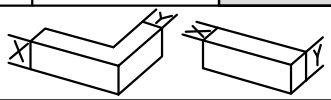

Image	Part Code	Pack	Unit	Application	Colour	
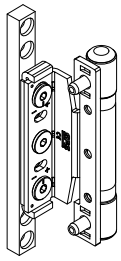	**ACUL250** **Door Hinge**	**12**	**pack**		MF	✓
					SA	
					KL	✓
					HP	
					SSC	
					SMC	
					W	✓
					Z	✓
					PC	
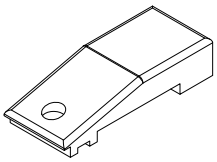	**ACUL257** **Run Up Block**	**2**	**pack**	**UL210**	MF	
					SA	
					KL	
					HP	
					SSC	
					SMC	
					W	✓
					Z	✓
					PC	
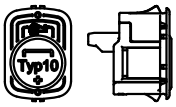	**ACUL286** **Magnetic Keep Insert**	**1**	**each**	**ACUL280** **ACUL281** **ACUL371** **ACUL373**	MF	
					SA	
					KL	
					HP	
					SSC	
					SMC	
					W	
					Z	
					PC	
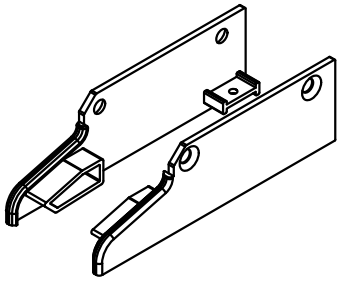	**ACUL290** **UL290 End Cap**	**1**	**pair**	**UL290**	MF	
					SA	
					KL	
					HP	
					SSC	
					SMC	
					W	✓
					Z	✓
					PC	
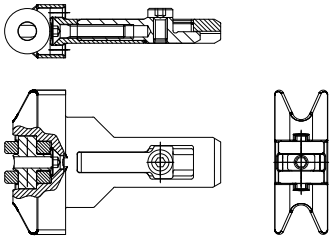	**ACUL291** **Roller Latch**	**1**	**each**	**UL292**	MF	
					SA	
					KL	
					HP	
					SSC	
					SMC	
					W	
					Z	
					PC	

T-BARS
ACVG65=2.5mm
ACVG66=3.0mm
ACVL150=4.0mm

Screw (Grub)

MF = Mill Finish
SA = Silver Anodised
KL = Basic Colour
HP = Special Colour
SSC = Smooth Satin Chrome
SMC = Smokey Chrome
PC = Polished Chrome
W = White
Z = Black

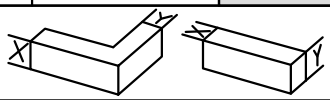

Image	Part Code	Pack	Unit	Application	Colour	
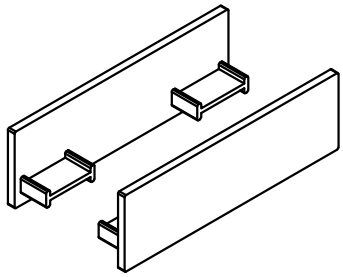	**ACUL292** **UL292 End Cap**	**1**	**pair**	**UL292**	MF	
					SA	
					KL	
					HP	
					SSC	
					SMC	
					W	✓
					Z	✓
					PC	
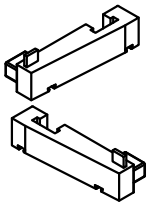	**ACUL293** **UL296 End Cap**	**1**	**pair**	**UL296**	MF	
					SA	
					KL	
					HP	
					SSC	
					SMC	
					W	✓
					Z	✓
					PC	
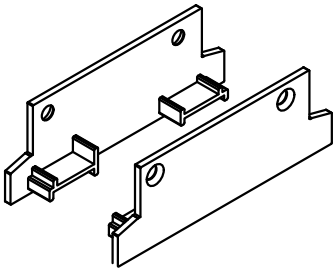	**ACUL294** **UL295 End Cap**	**1**	**Pair**	**UL295**	MF	
					SA	
					KL	
					HP	
					SSC	
					SMC	
					W	✓
					Z	✓
					PC	
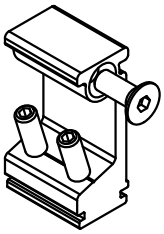	**ACUL295** **Low Threshold Bracket**	**1**	**Pair**	**UL290** **UL292**	MF	
					SA	
					KL	
					HP	
					SSC	
					SMC	
					W	
					Z	
					PC	
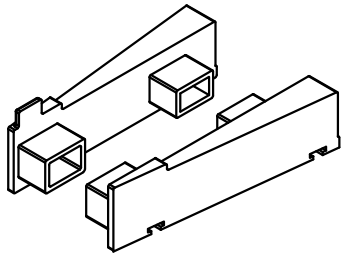	**ACUL296** **UL296 End Cap**	**1**	**Pair**	**UL296**	MF	
					SA	
					KL	
					HP	
					SSC	
					SMC	
					W	✓
					Z	✓
					PC	

T-BARS
ACVG65=2.5mm
ACVG66=3.0mm
ACVL150=4.0mm

Screw (Grub)

MF = Mill Finish
SA = Silver Anodised
KL = Basic Colour
HP = Special Colour
SSC = Smooth Satin Chrome
SMC = Smokey Chrome
PC = Polished Chrome
W = White
Z = Black

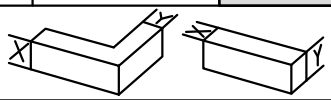

Visotherm Door

ACCESSORIES : PHOTOS & DRAWINGS

Image	Part Code	Pack	Unit	Application	Colour	
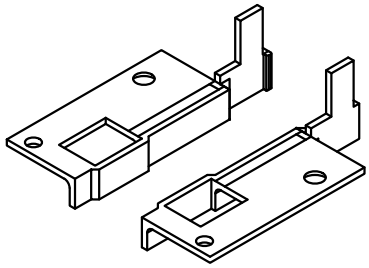	**ACUL297** **Low Threshold Adapter End Cap**	**1**	**Pair**	**UL297**	MF	
					SA	
					KL	
					HP	
					SSC	
					SMC	
					W	✓
					Z	✓
					PC	
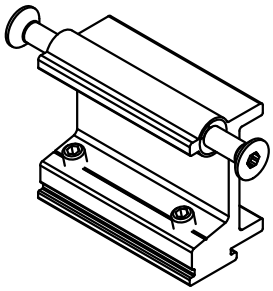	**ACUL299** **Transom/Mullion Bracket**	**10**	**pack**		MF	✓
					SA	
					KL	
					HP	
					SSC	
					SMC	
					W	
					Z	
					PC	
	**ACUN3035** **Door Gasket**	**100**	**m**		MF	
					SA	
					KL	
					HP	
					SSC	
					SMC	
					W	
					Z	✓
					PC	
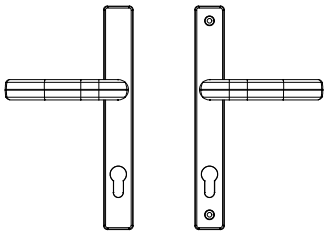	**ACUN3557** **Architectural Handle** **Available in:** **Chrome & Graphite**	**1**	**Pair**		MF	
					SA	
					KL	
					HP	
					SSC	
					SMC	
					W	
					Z	
					PC	
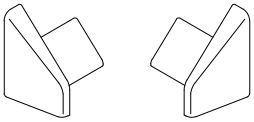	**ACVL059** **End Caps**	**1**	**Pair**	**VL72**	MF	
					SA	
					KL	
					HP	
					SSC	
					SMC	
					W	✓
					Z	✓
					PC	

T-BARS
ACVG65=2.5mm
ACVG66=3.0mm
ACVL150=4.0mm

Screw (Grub)

MF = Mill Finish
SA = Silver Anodised
KL = Basic Colour
HP = Special Colour
SSC = Smooth Satin Chrome
SMC = Smokey Chrome
PC = Polished Chrome
W = White
Z = Black

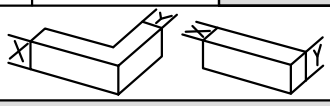

Visotherm Door

ACCESSORIES : PHOTOS & DRAWINGS

Image	Part Code	Pack	Unit	Application	Colour	
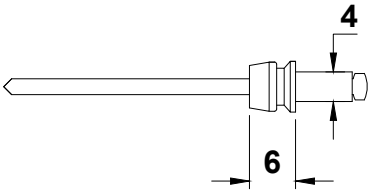	**ACVL061** **Rivet to secure VL72**	**100**	**pack**	**VL72**	MF	
					SA	
					KL	
					HP	
					SSC	
					SMC	
					W	
					Z	
					PC	
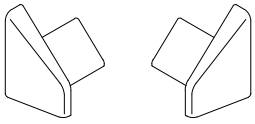	**ACVL072** **Cast End Caps**	**1**	**Pair**	**VL72**	MF	✓
					SA	
					KL	✓
					HP	✓
					SSC	
					SMC	
					W	
					Z	
					PC	
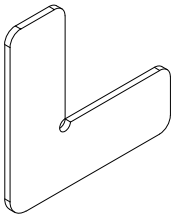	**WCA106** **Stainless Steel Chevrons**	**50**	**pack**		MF	
					SA	
					KL	
					HP	
					SSC	
					SMC	
					W	
					Z	
					PC	
					MF	
					SA	
					KL	
					HP	
					SSC	
					SMC	
					W	
					Z	
					PC	
					MF	
					SA	
					KL	
					HP	
					SSC	
					SMC	
					W	
					Z	
					PC	

T-BARS
ACVG65=2.5mm
ACVG66=3.0mm
ACVL150=4.0mm

Screw (Grub)

MF = Mill Finish
SA = Silver Anodised
KL = Basic Colour
HP = Special Colour
SSC = Smooth Satin Chrome
SMC = Smokey Chrome
PC = Polished Chrome
W = White
Z = Black

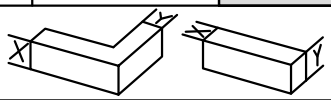

ISSUED: OCTOBER 2022

Visotherm Door

STANDARD ACCESSORIES

Image	Part Code	Pack	Unit	Application	Colour
	**ACMX09700** **Alu. Polish**	1	each		MF ✓ SA KL HP SSC SMC W Z PC
	**ACMX09761** **Maxi Gloss**	1	each		MF SA KL HP SSC SMC W Z PC
	**ACMX09762** **Alu. Bright**	1	each		MF SA KL HP SSC SMC W Z PC
	**ACMX09763** **Teflon Spray**	1	each		MF SA KL HP SSC SMC W Z PC
	**ACMX09764** **Maxi Clean**	1	each		MF SA KL HP SSC SMC W Z PC

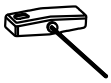

T-BARS
ACVG65=2.5mm
ACVG66=3.0mm
ACVL150=4.0mm

Screw (Grub)

MF = Mill Finish
SA = Silver Anodised
KL = Basic Colour
HP = Special Colour
SSC = Smooth Satin Chrome
SMC = Smokey Chrome
PC = Polished Chrome
W = White
Z = Black

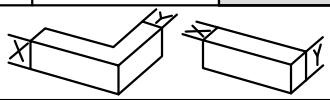

Visotherm Door

STANDARD ACCESSORIES

Image	Part Code	Pack	Unit	Application	Colour
	**ACMX09765** **Alu. Cleaner**	1	each		MF SA KL HP SSC SMC W Z PC
	**ACMX09770** **Roll & Wrap 100mm**	1	each		MF SA KL HP SSC SMC W Z PC
	**ACMX09775** **Grip Handwrap**	1	each		MF SA KL HP SSC SMC W Z PC
	**ACMX09801** **Protective Tape 50mm**	1	each		MF SA KL HP SSC SMC W Z PC
	**ACMX09802** **Protective Tape 70mm**	1	each		MF SA KL HP SSC SMC W Z PC

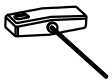

T-BARS
ACVG65=2.5mm
ACVG66=3.0mm
ACVL150=4.0mm

Screw (Grub)

MF = Mill Finish
SA = Silver Anodised
KL = Basic Colour
HP = Special Colour
SSC = Smooth Satin Chrome
SMC = Smokey Chrome
PC = Polished Chrome
W = White
Z = Black

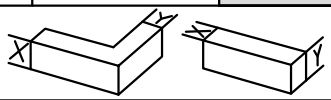

ISSUED: OCTOBER 2022

Visotherm Door

STANDARD ACCESSORIES

Image	Part Code	Pack	Unit	Application	Colour	
	**ACMX09803** **Protective Tape 100mm**	**1**	**each**		MF	
					SA	
					KL	
					HP	
					SSC	
					SMC	
					W	
					Z	
					PC	
	**ACMX09830** **Rubber Sealant**	**1**	**each**		MF	
					SA	
					KL	
					HP	
					SSC	
					SMC	
					W	
					Z	
					PC	
	**ACSIL04** **Sealing Glue** **Order with suffix of KL colour (eg.ACSIL04KL005) or BL=Black/WP=White/ CL=Clear**	**1**	**each**		MF	
					SA	
					KL	✓
					HP	
					SSC	
					SMC	
					W	✓
					Z	✓
					PC	
	**ACSIL08** **Silicon Gun**	**1**	**each**		MF	
					SA	
					KL	
					HP	
					SSC	
					SMC	
					W	
					Z	
					PC	
	**ACSIL013** **Glue for Mitre**	**1**	**each**		MF	
					SA	
					KL	
					HP	
					SSC	
					SMC	
					W	
					Z	
					PC	

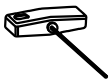

T-BARS
ACVG65=2.5mm
ACVG66=3.0mm
ACVL150=4.0mm

Screw (Grub)

MF = Mill Finish
SA = Silver Anodised
KL = Basic Colour
HP = Special Colour
SSC = Smooth Satin Chrome
SMC = Smokey Chrome
PC = Polished Chrome
W = White
Z = Black

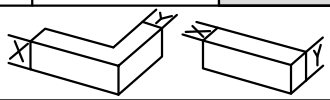

Visotherm Door

STANDARD ACCESSORIES

Image	Part Code	Pack	Unit	Application	Colour
	**ACSIL014** **Anti-Corrosion Coating**	1	each		MF ✓ SA KL HP SSC SMC W Z PC
	**ACUN3900** **Gasket Roller**	1	each		MF SA KL HP SSC SMC W Z PC
					MF SA KL HP SSC SMC W Z PC
					MF SA KL HP SSC SMC W Z PC
					MF SA KL HP SSC SMC W Z PC

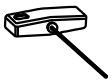

T-BARS
ACVG65=2.5mm
ACVG66=3.0mm
ACVL150=4.0mm

Screw (Grub)

MF = Mill Finish
SA = Silver Anodised
KL = Basic Colour
HP = Special Colour
SSC = Smooth Satin Chrome
SMC = Smokey Chrome
PC = Polished Chrome
W = White
Z = Black

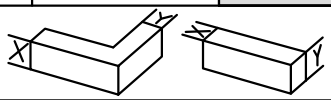

ISSUED: OCTOBER 2022

Section C

Sections

Scale Elevations

Open In Scale Elevations

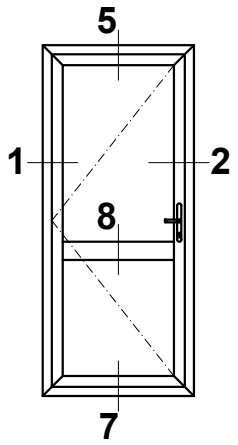

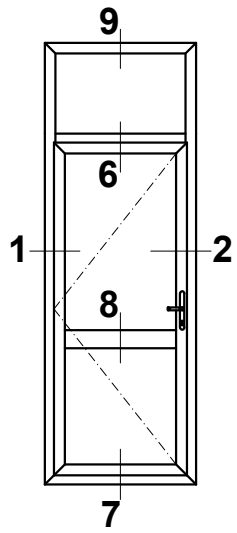

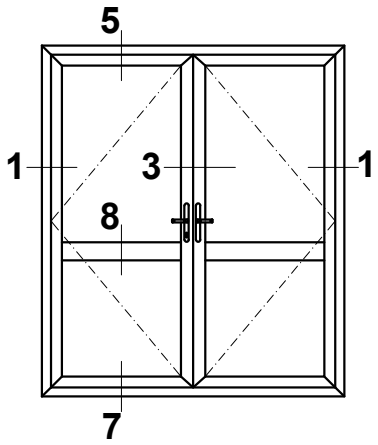

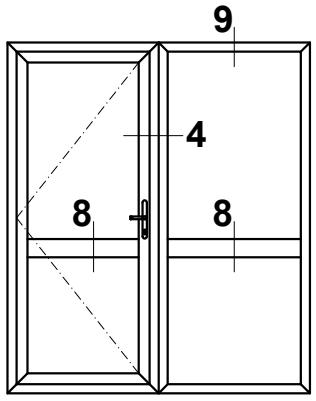

Do Not Scale From This Drawing

Open In - Detail 1A

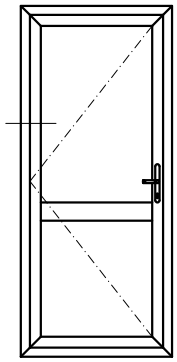

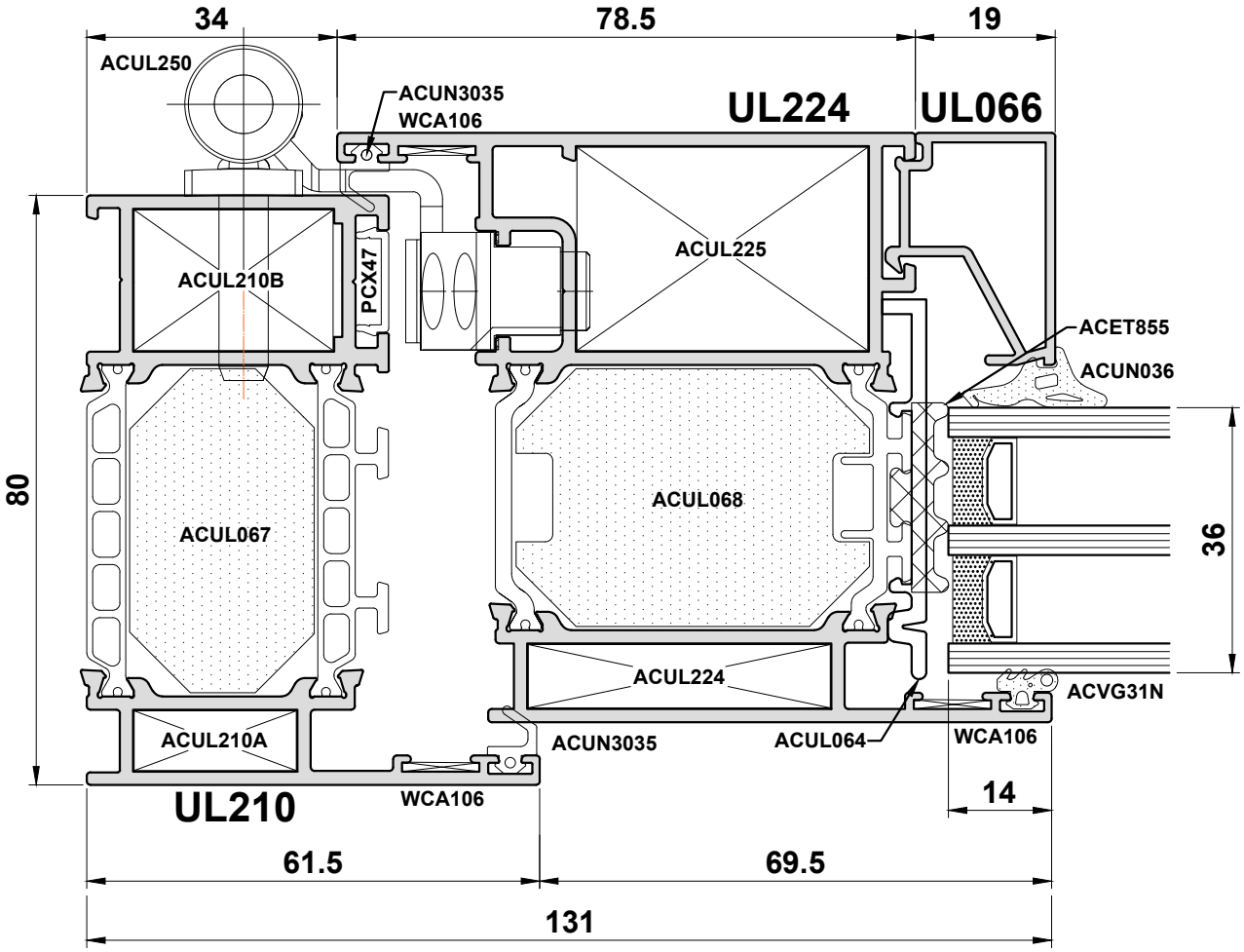

Do Not Scale From This Drawing

Open In - Detail 1B

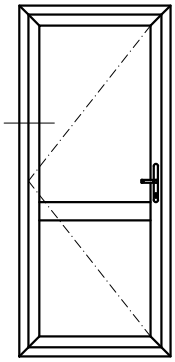

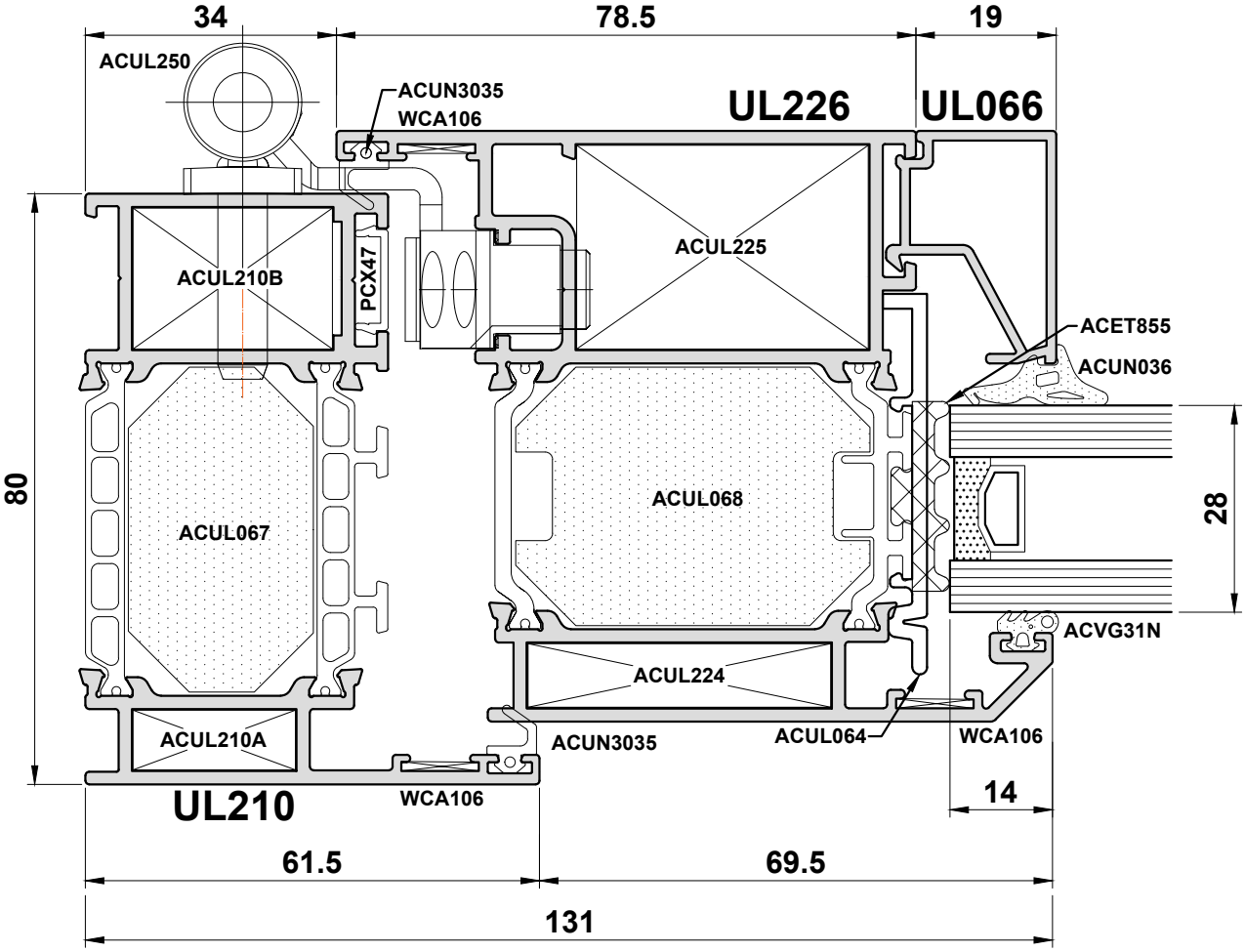

Do Not Scale From This Drawing

Open In - Detail 2A

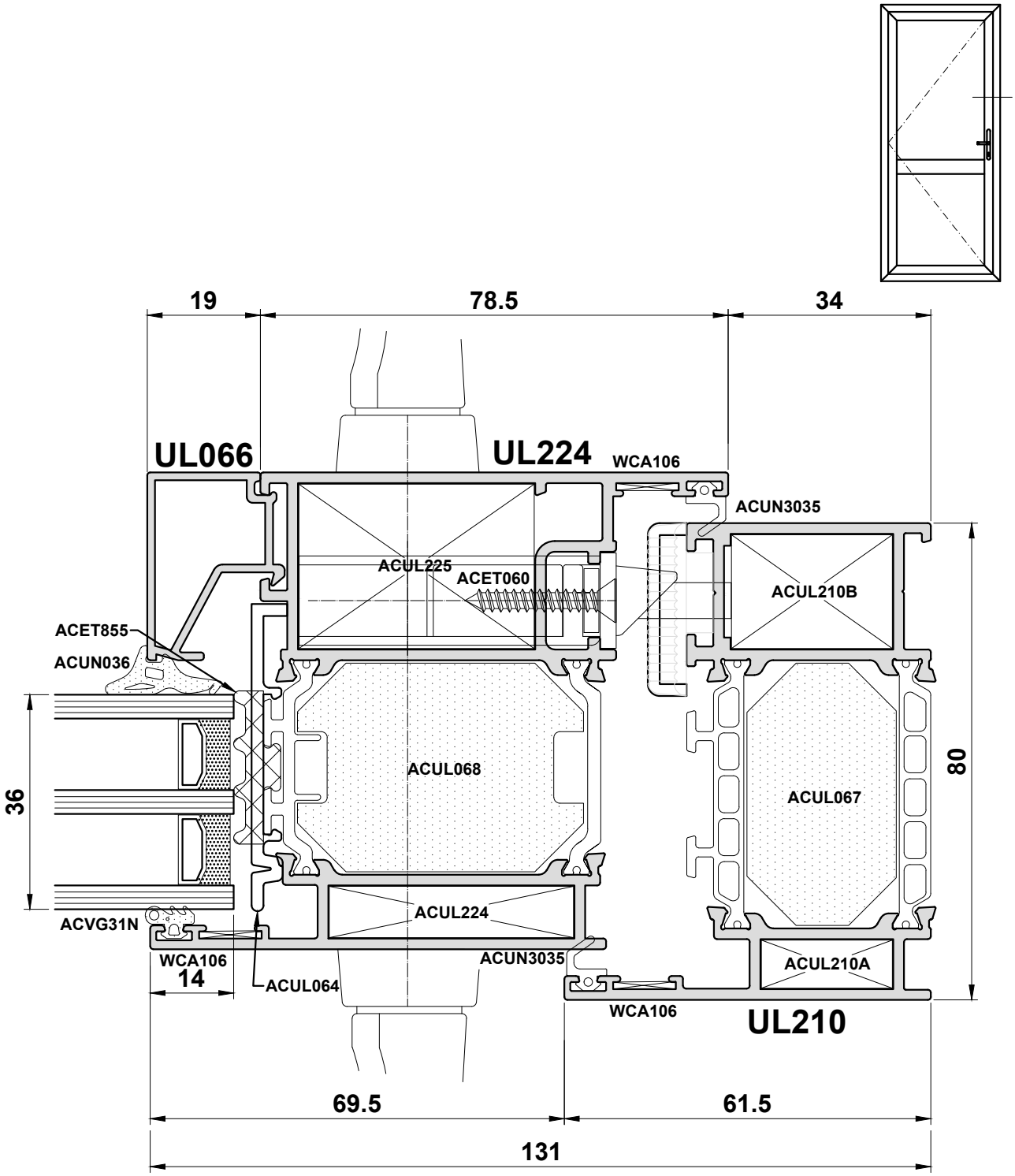

Do Not Scale From This Drawing

Open In - Detail 2B

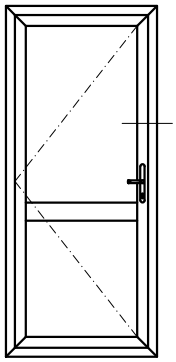

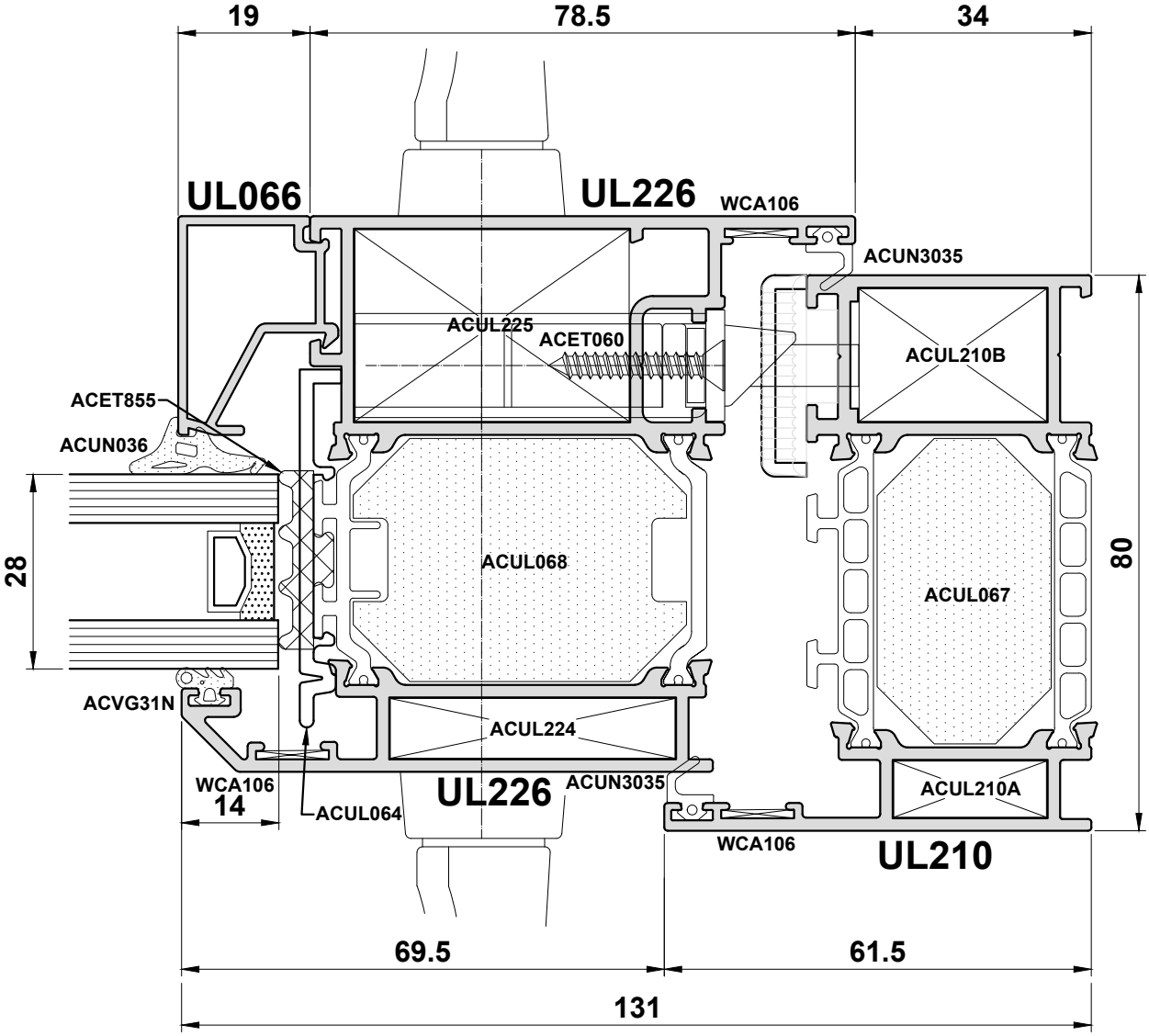

Do Not Scale From This Drawing

Open In - Detail 3A

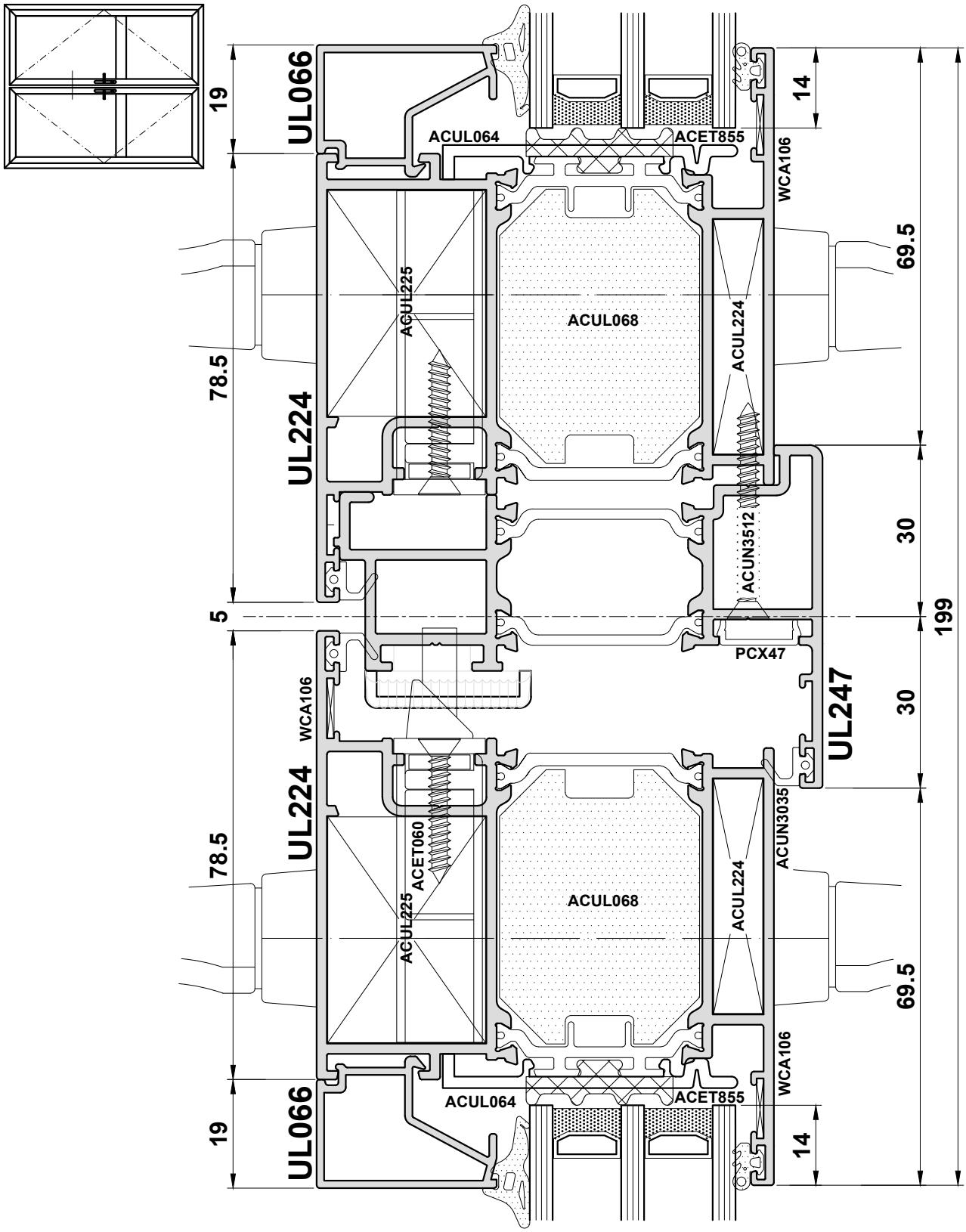

Do Not Scale From This Drawing

Open In - Detail 3B

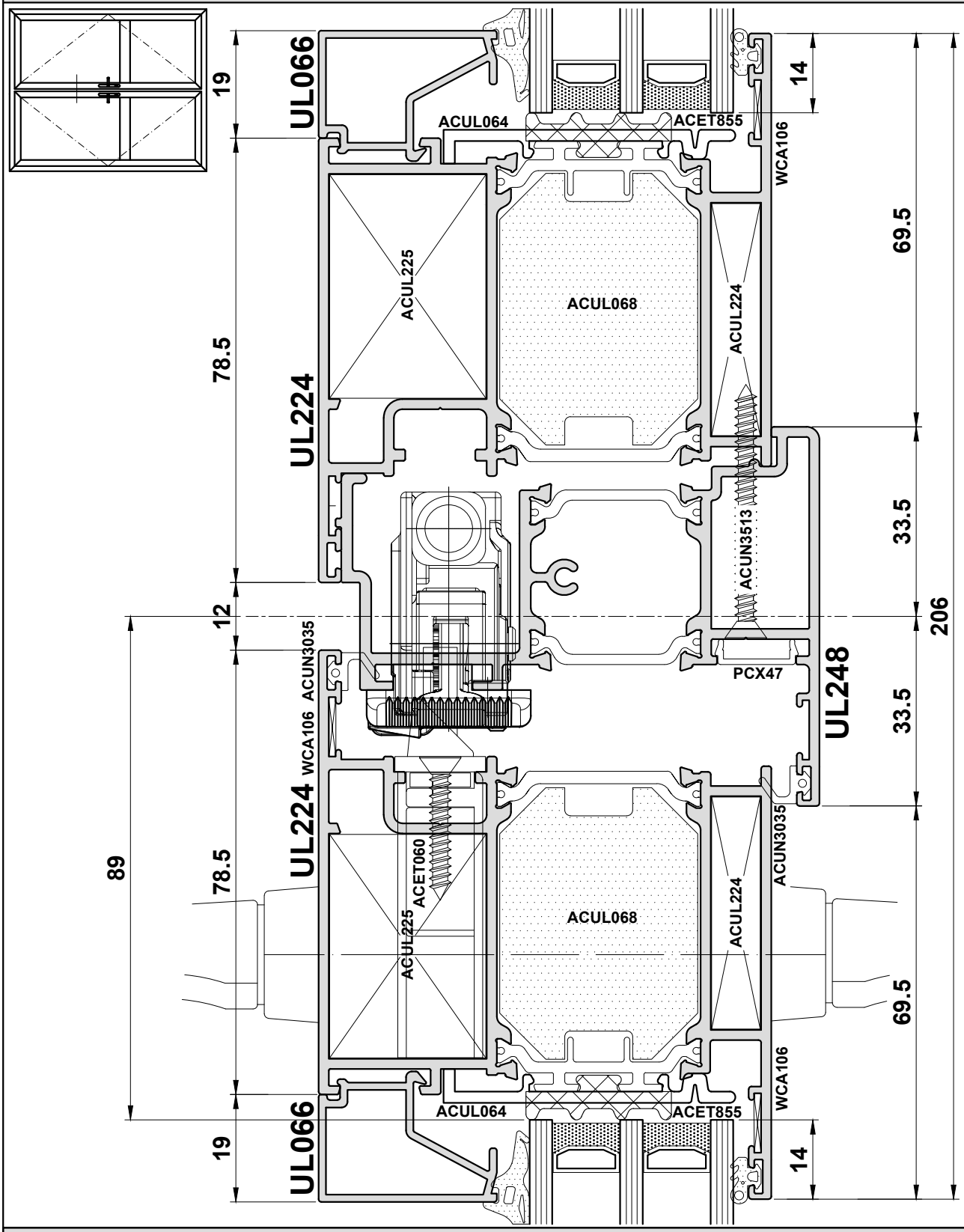

Do Not Scale From This Drawing

Open In - Detail 4A

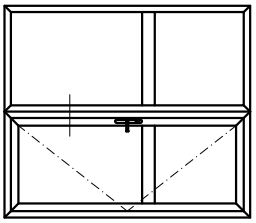

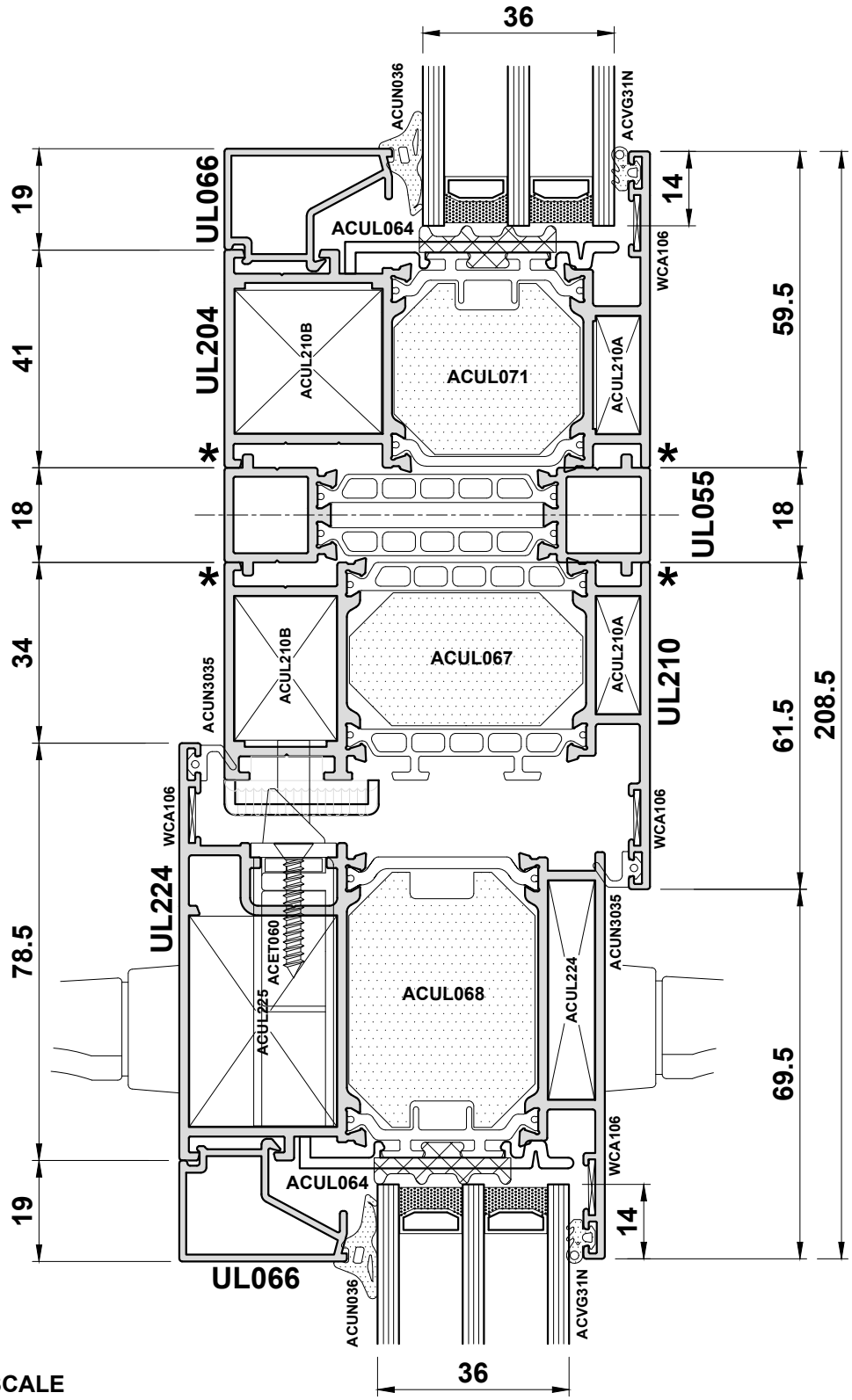

DRAWING NOT TO SCALE

Do Not Scale From This Drawing

Open In - Detail 4B

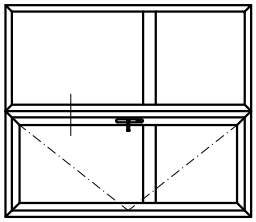

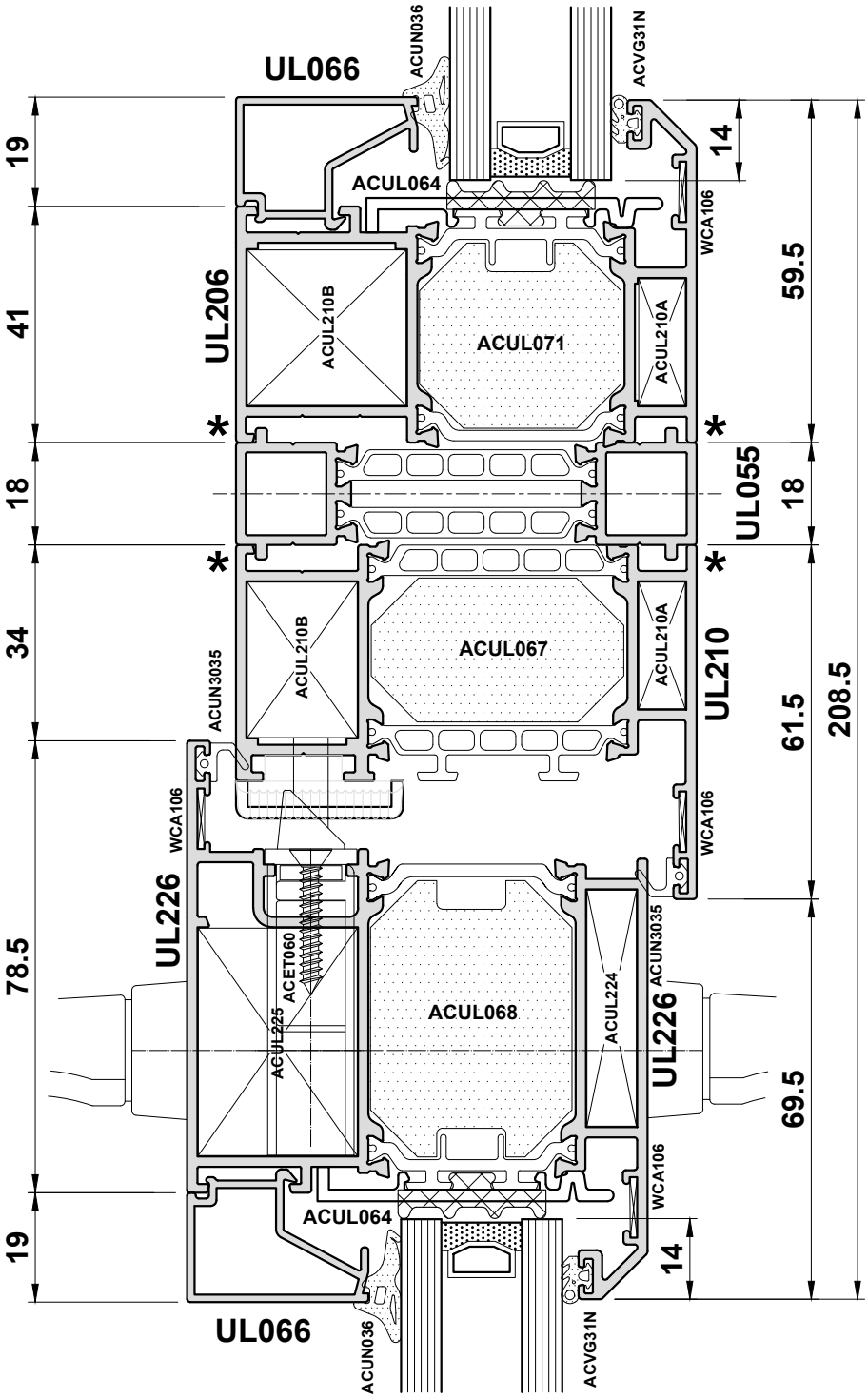

DRAWING NOT TO SCALE

Do Not Scale From This Drawing

Open In - Detail 5

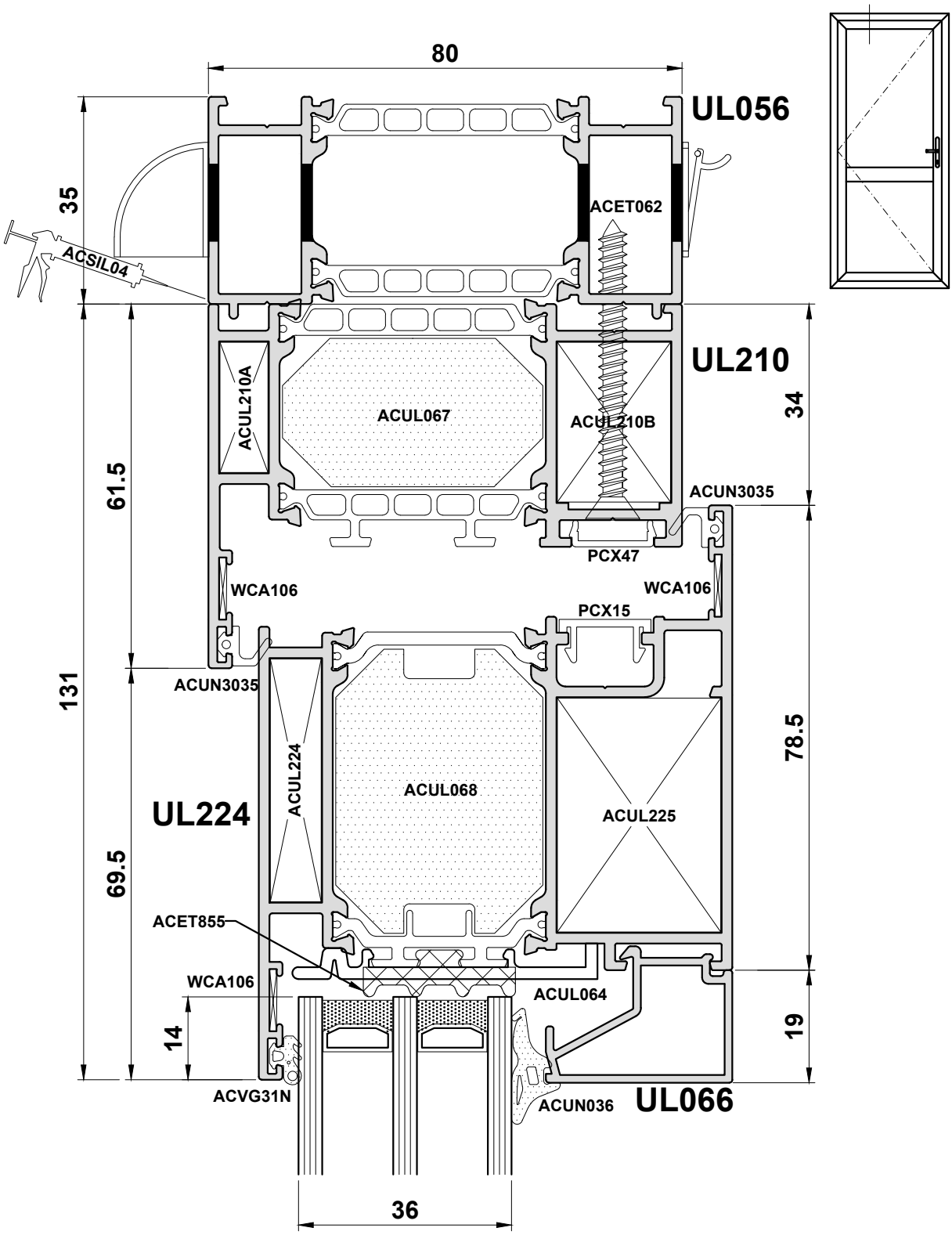

Do Not Scale From This Drawing

Open In - Detail 6A

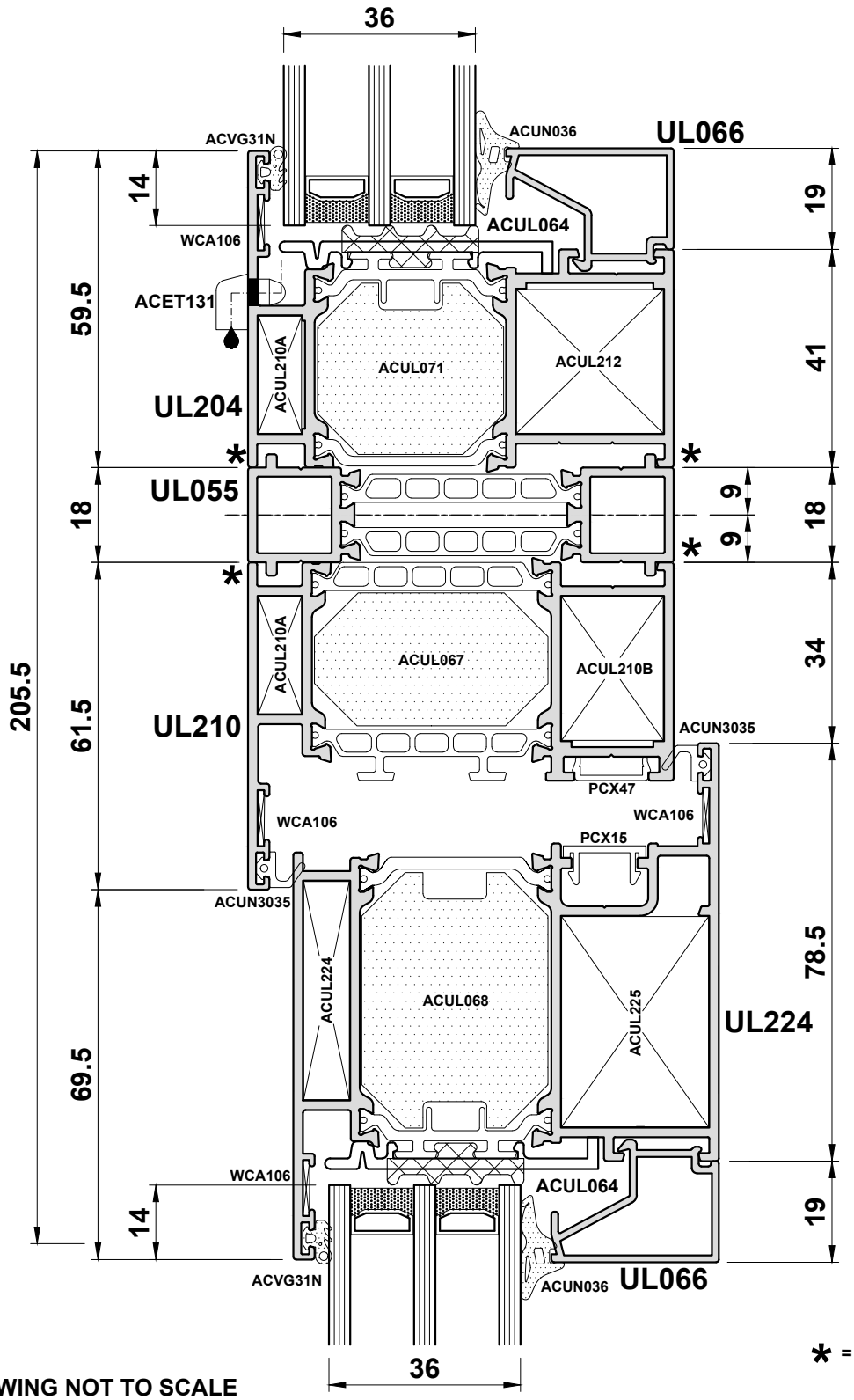

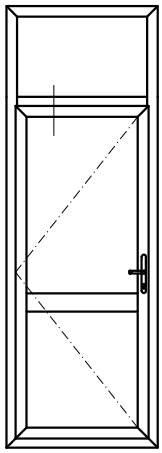

* = ACSIL04

DRAWING NOT TO SCALE

Do Not Scale From This Drawing

Open In - Detail 6B

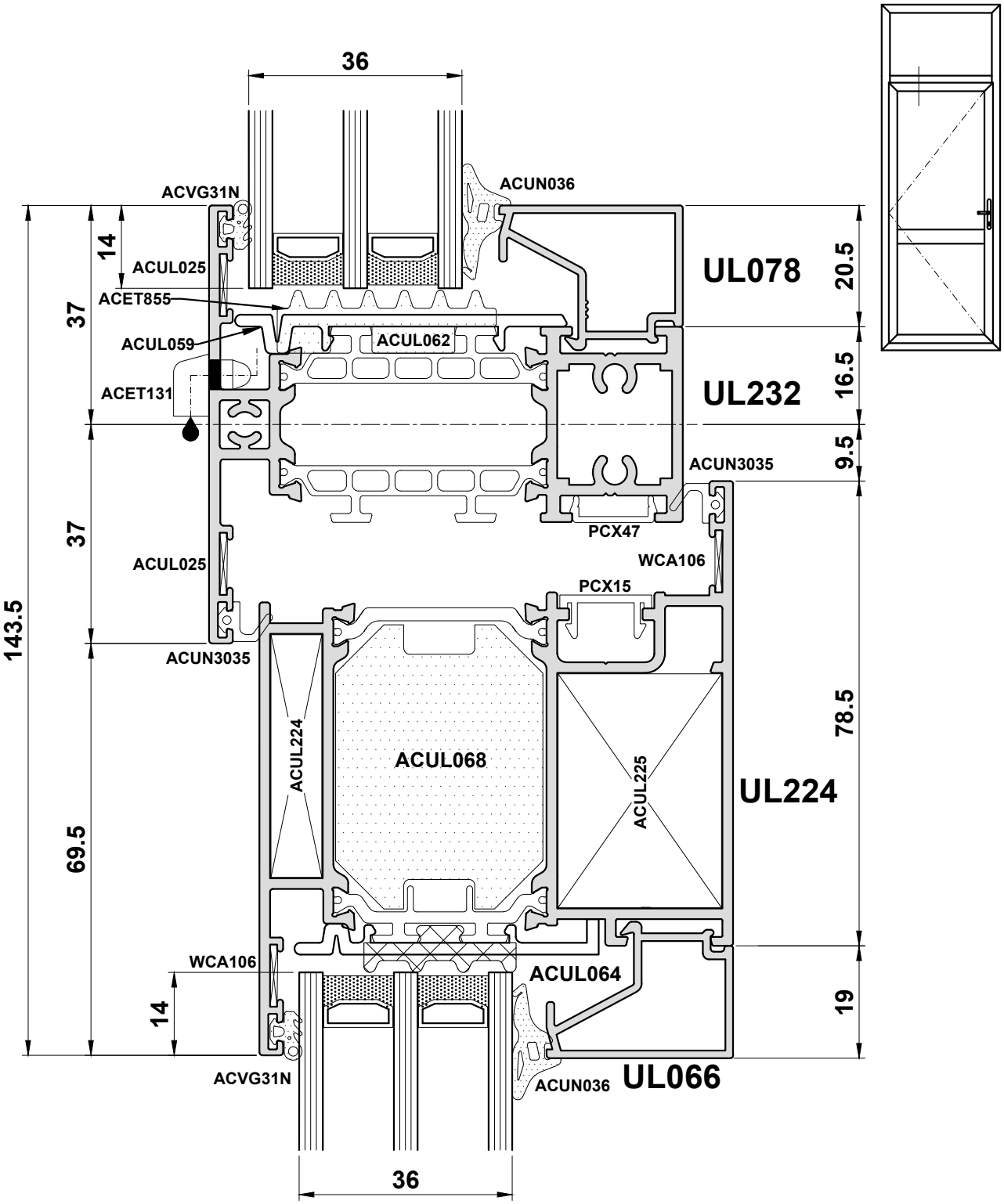

Do Not Scale From This Drawing

Open In - Detail 7A

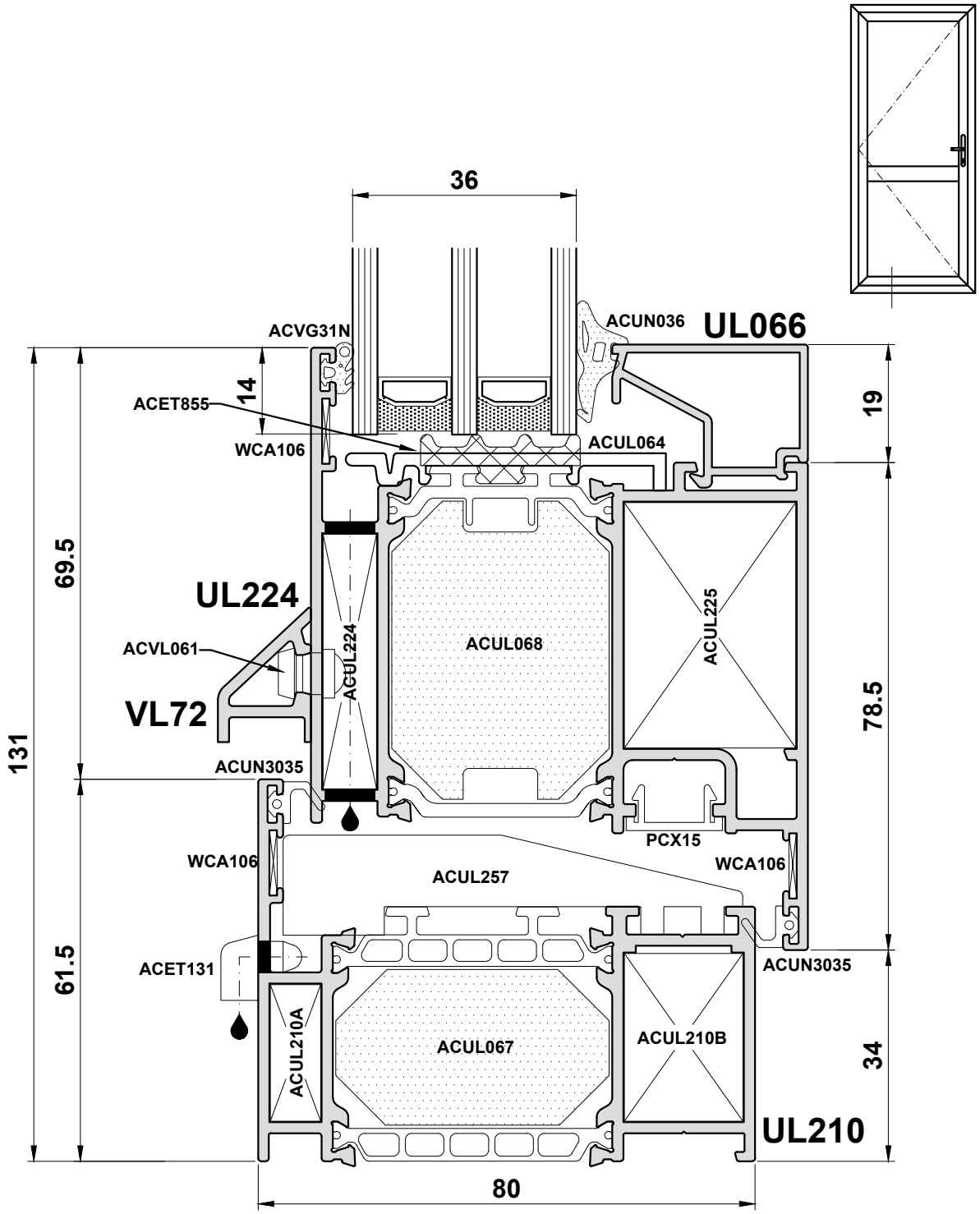

Do Not Scale From This Drawing

Open In - Detail 7B

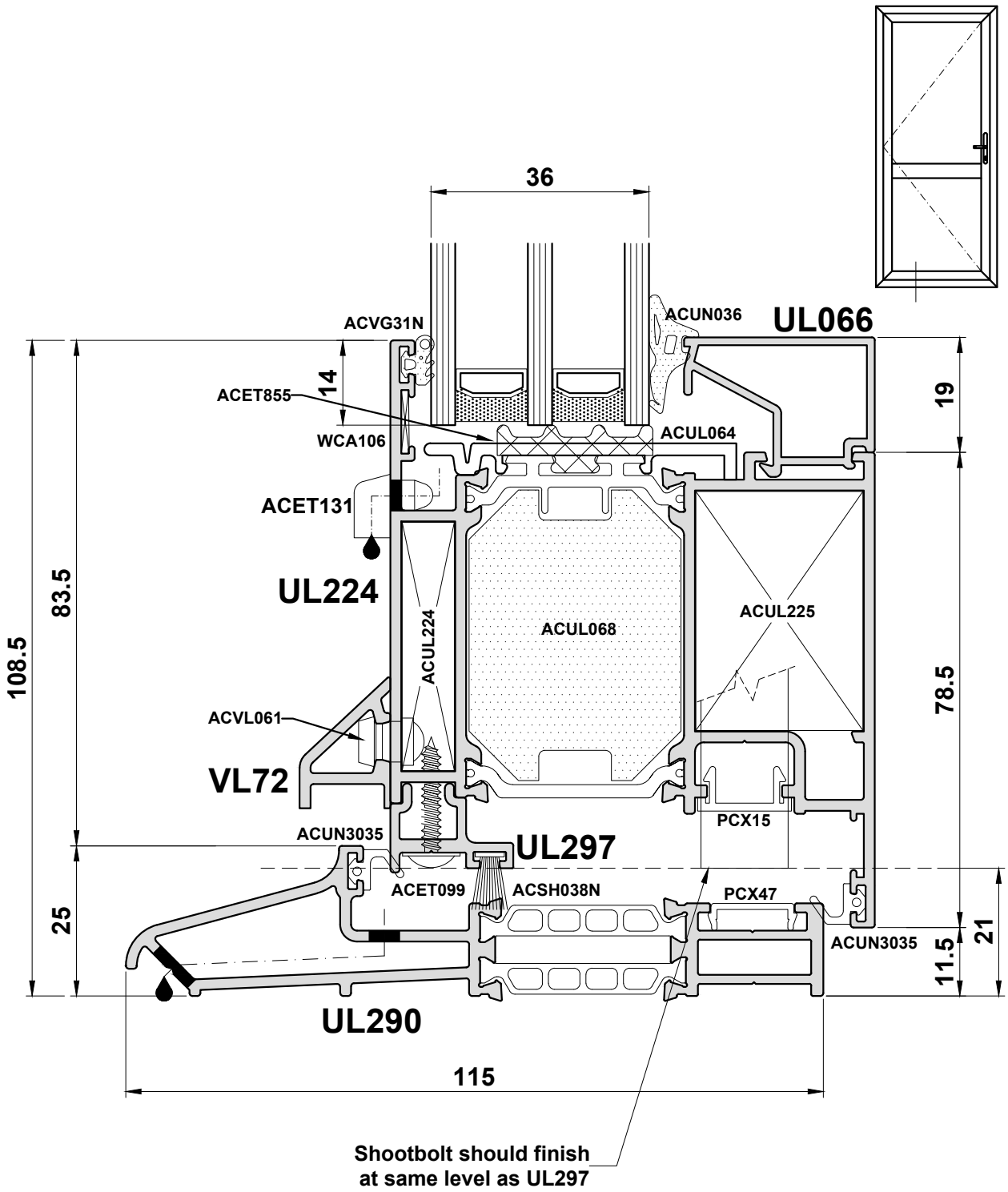

Do Not Scale From This Drawing

Open In - Detail 7C

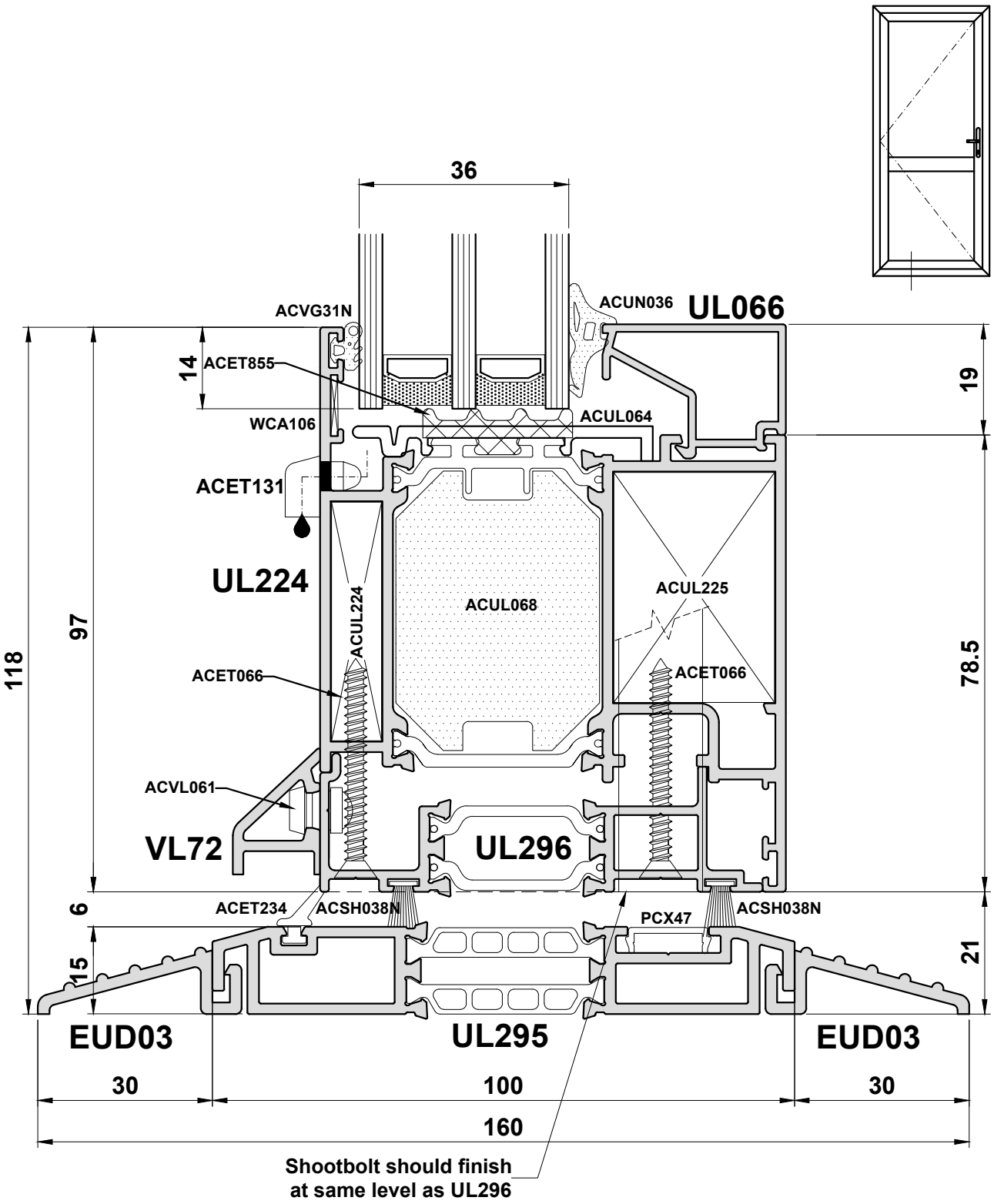

Do Not Scale From This Drawing

Open In - Detail 8A

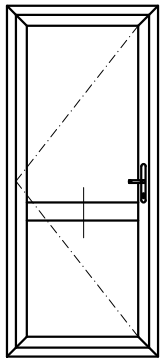

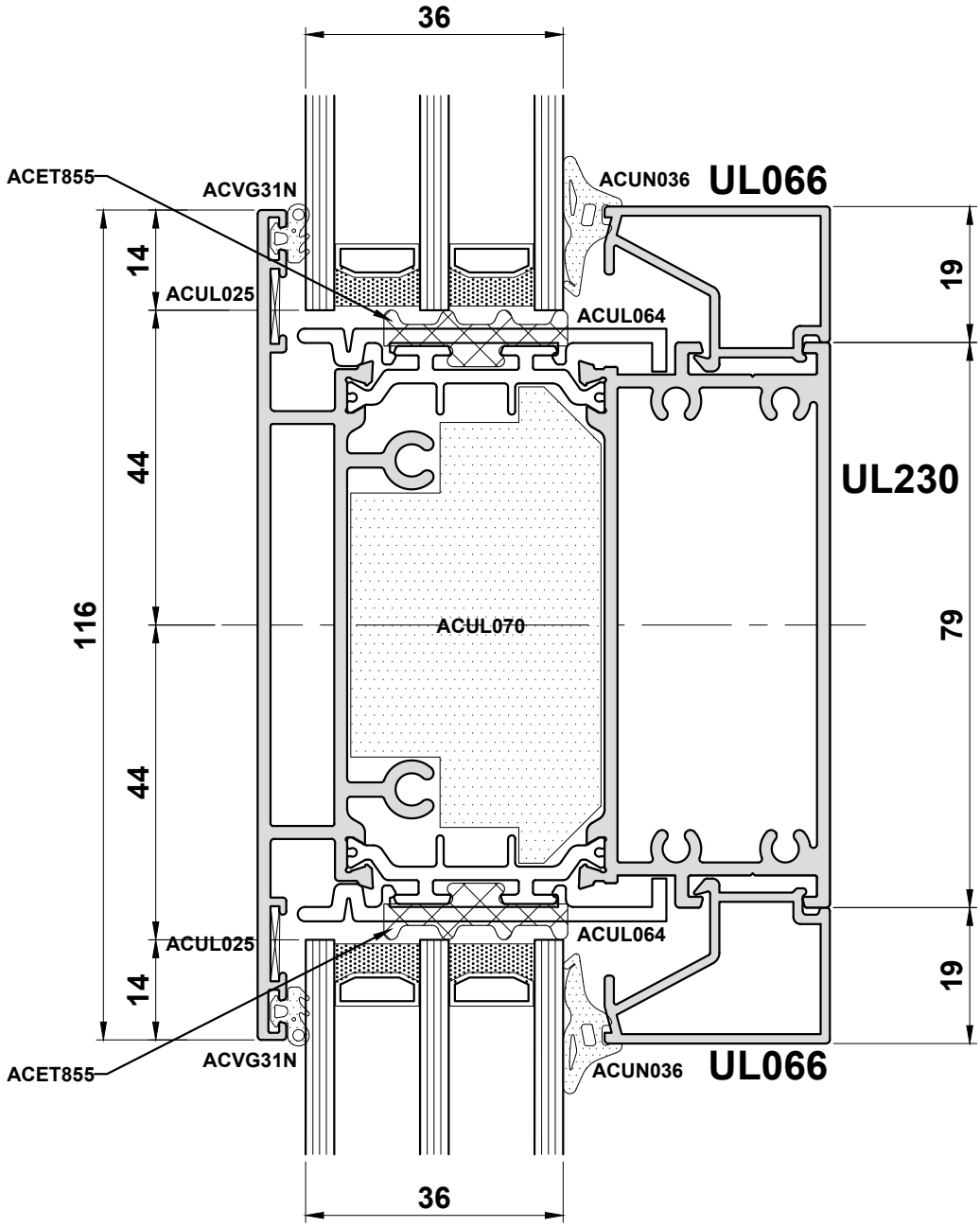

Do Not Scale From This Drawing

Open In - Detail 8B

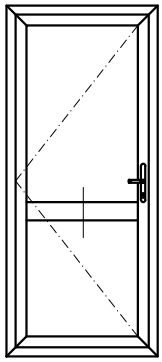

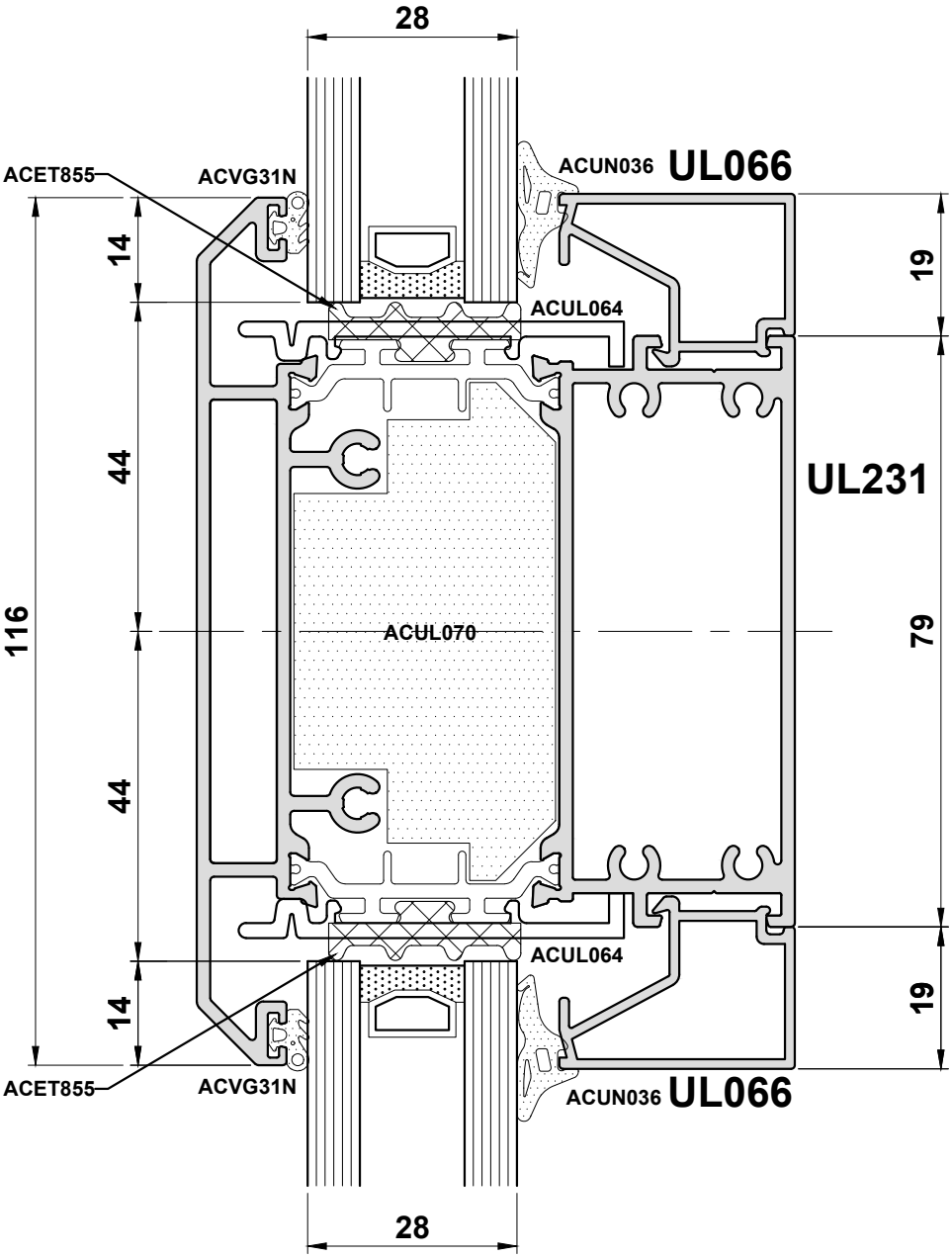

Do Not Scale From This Drawing

Open In - Detail 9A

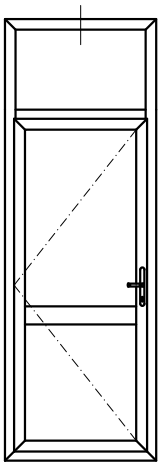

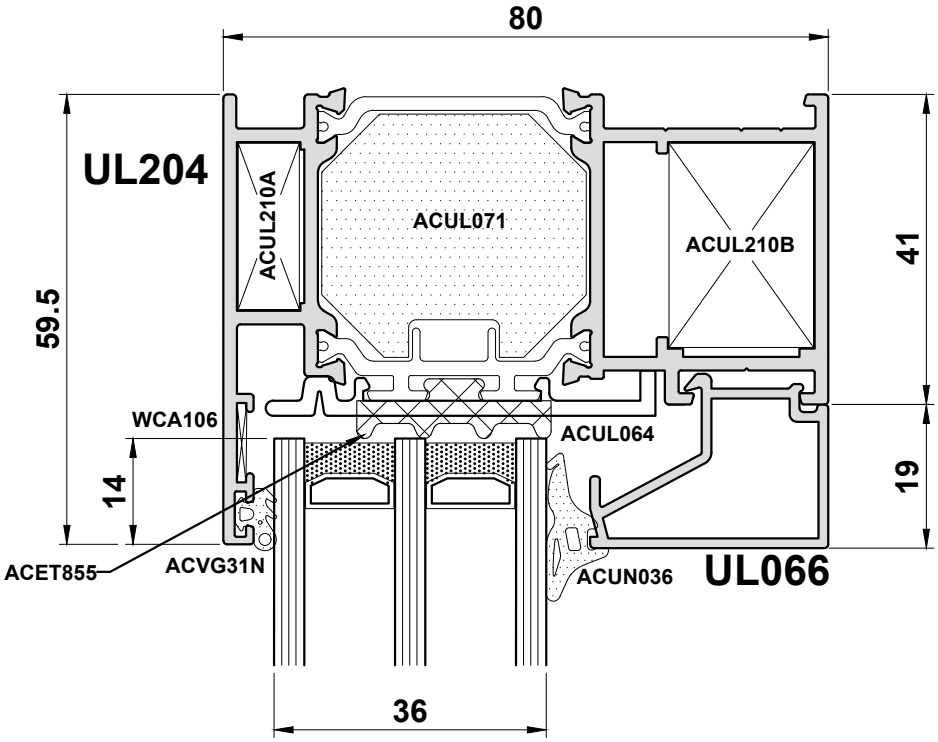

Do Not Scale From This Drawing

Open In - Detail 9B

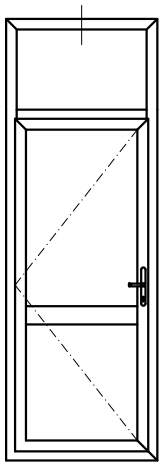

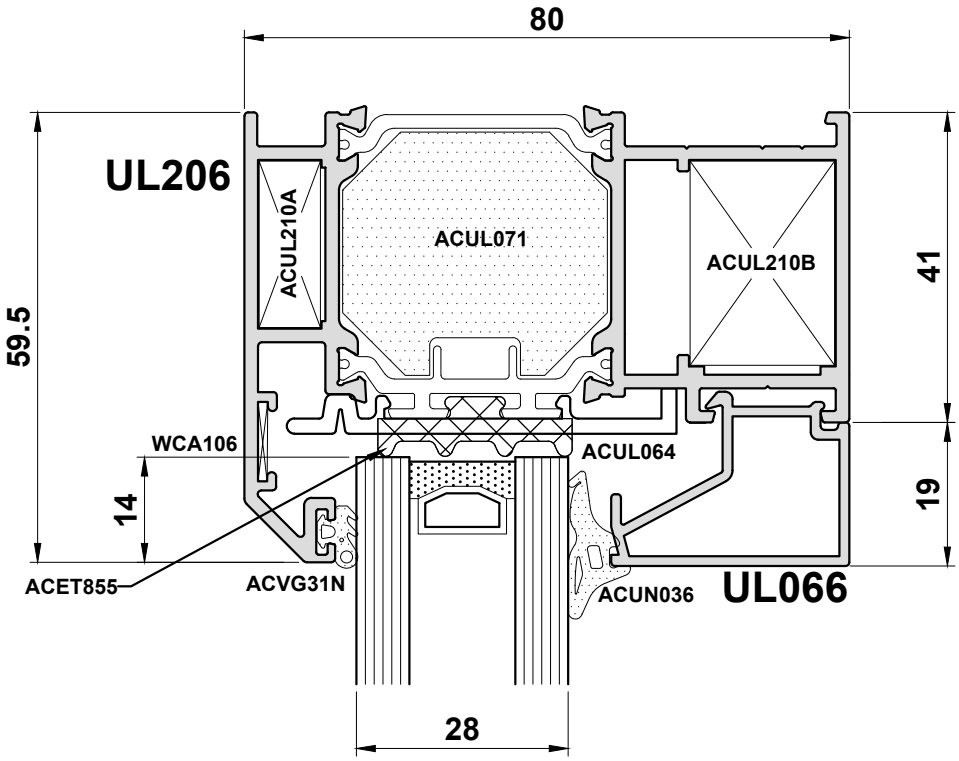

Do Not Scale From This Drawing

Open Out Scale Elevations

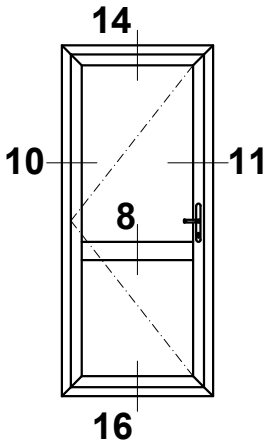

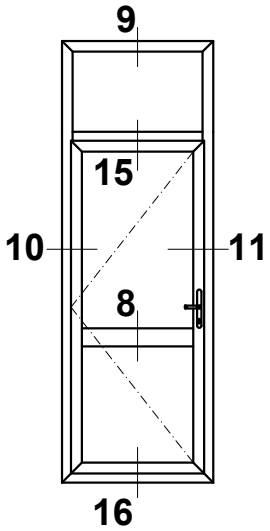

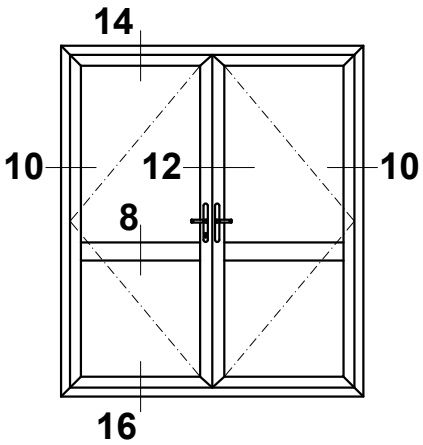

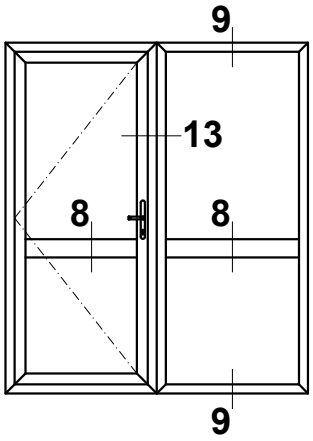

Do Not Scale From This Drawing

Open Out - Detail 10A

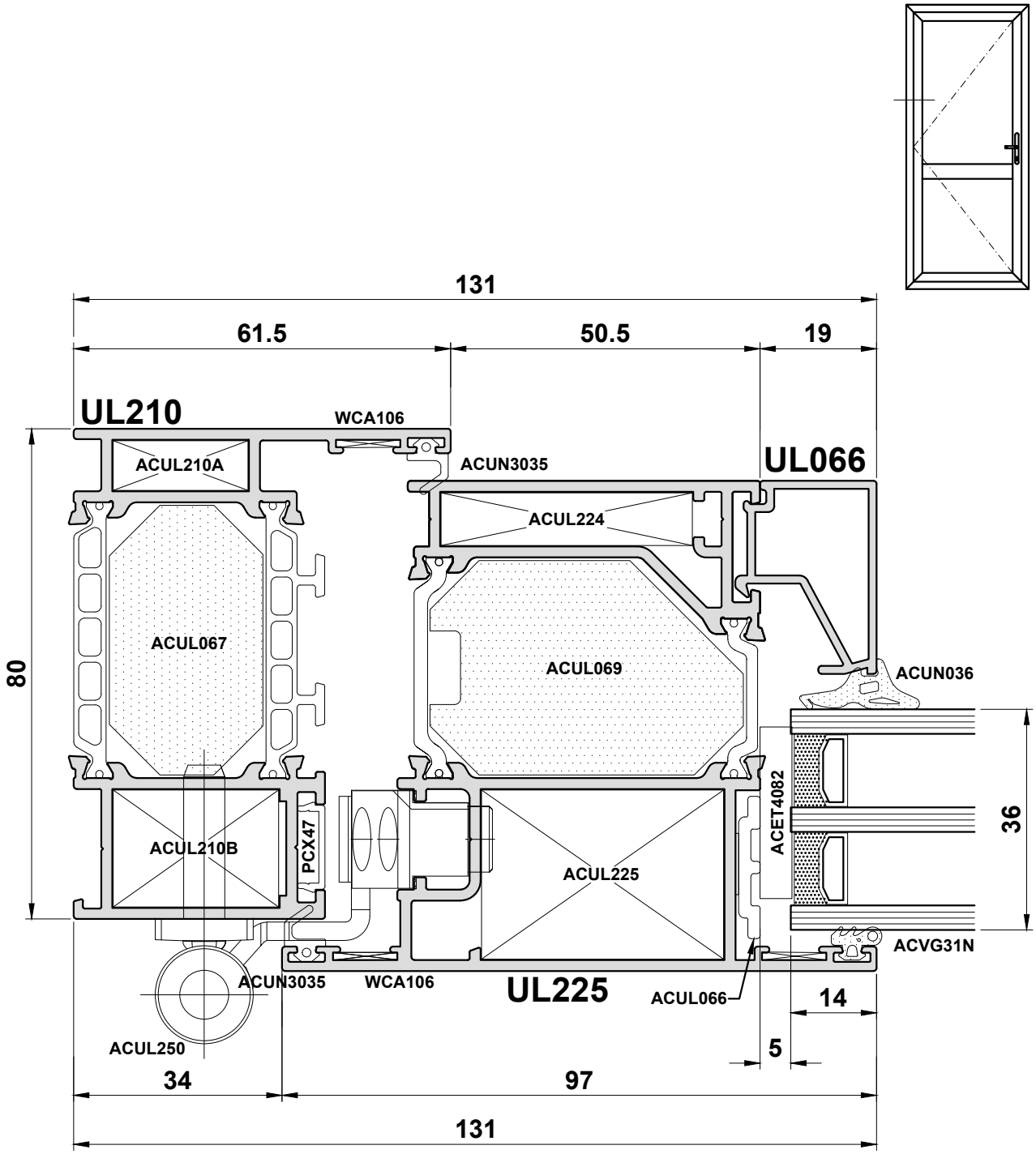

Do Not Scale From This Drawing

Open Out - Detail 10B

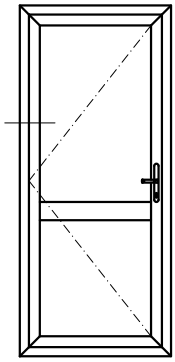

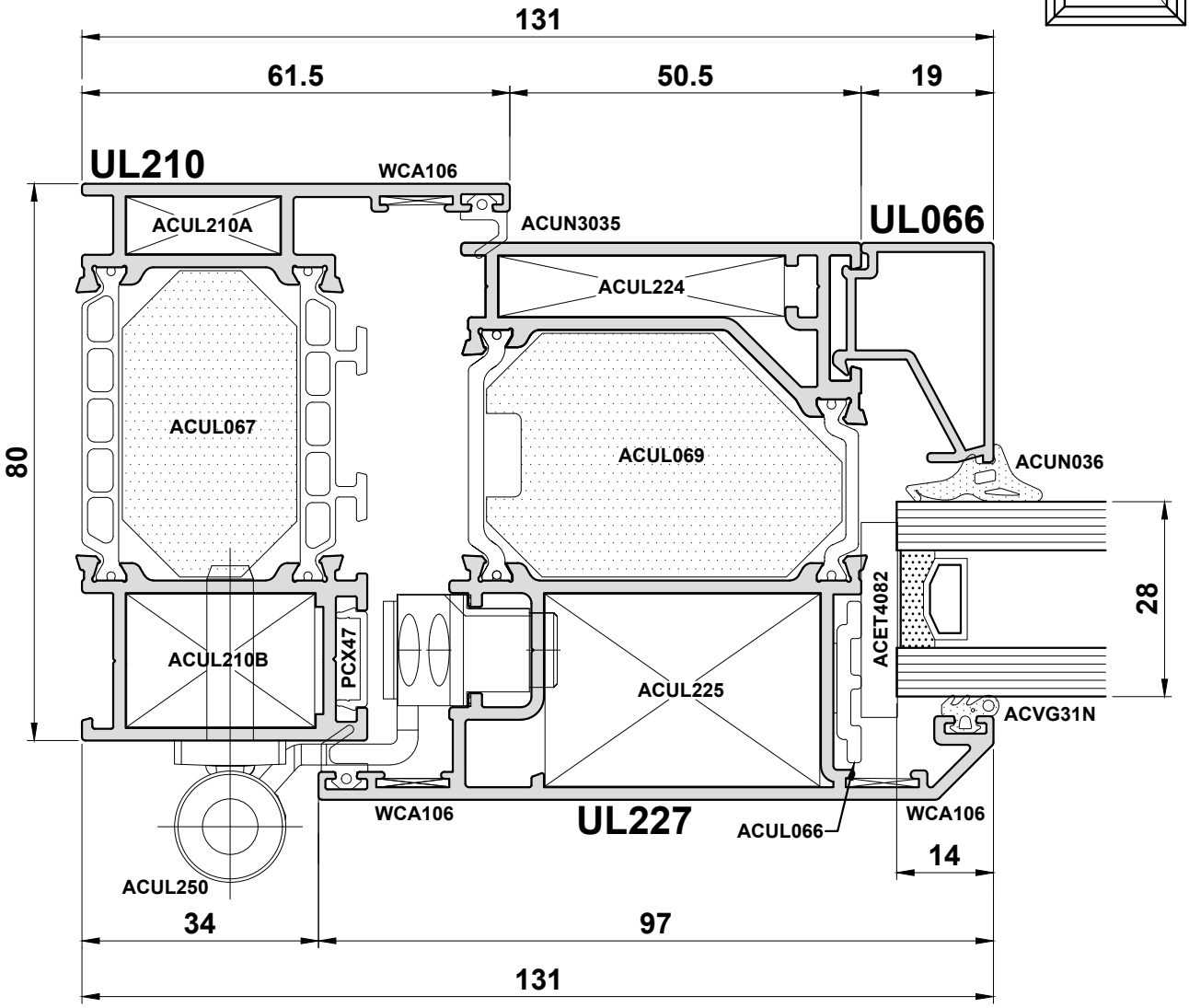

Do Not Scale From This Drawing

Open Out - Detail 11A

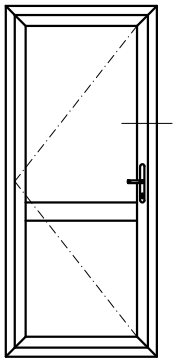

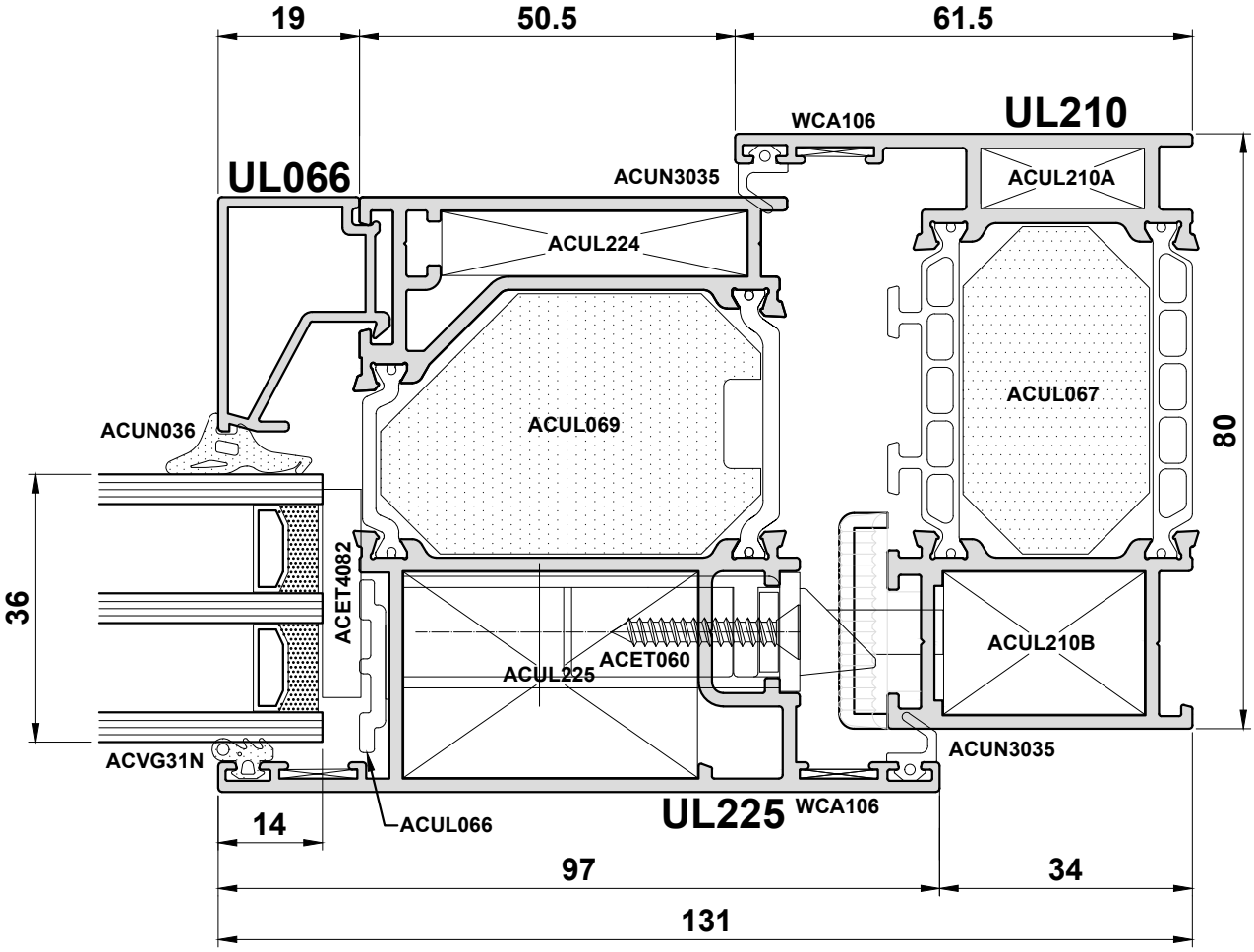

Do Not Scale From This Drawing

Open Out - Detail 11B

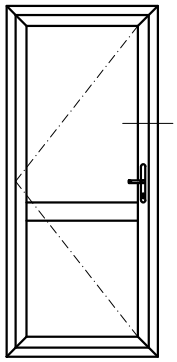

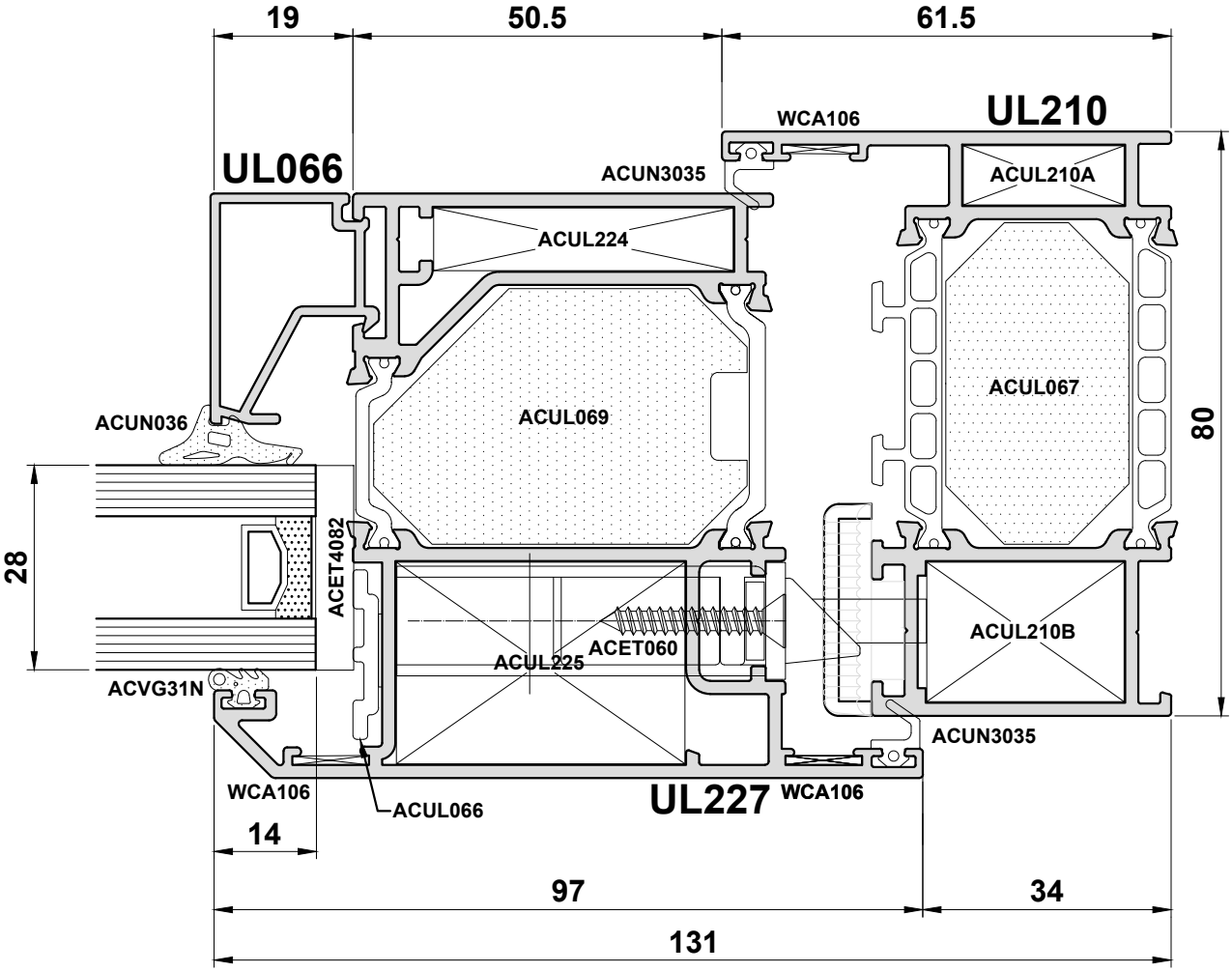

Do Not Scale From This Drawing

Open Out - Detail 12A

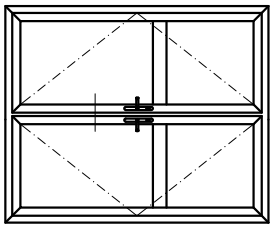

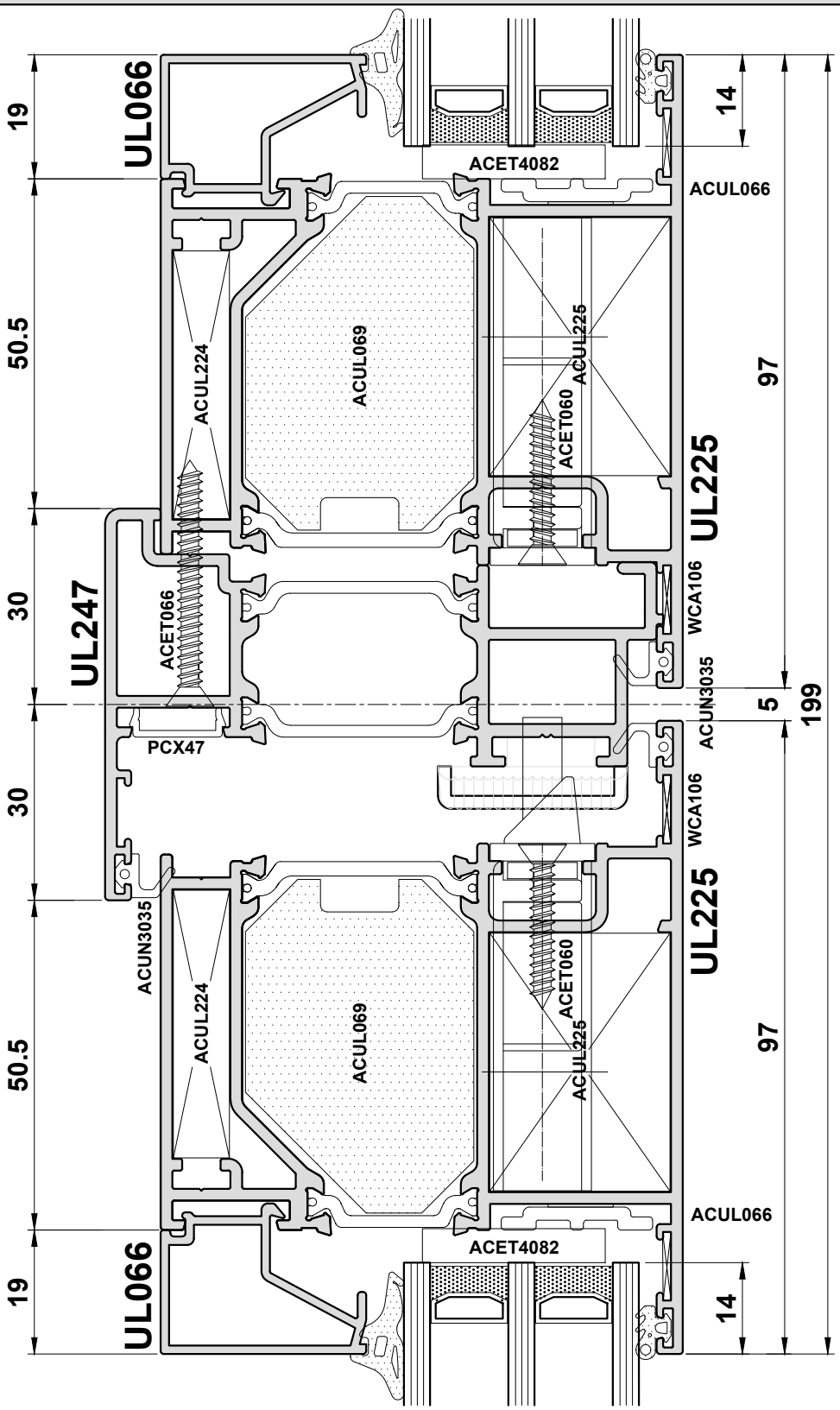

Do Not Scale From This Drawing

Open Out - Detail 12B

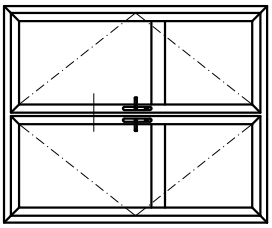

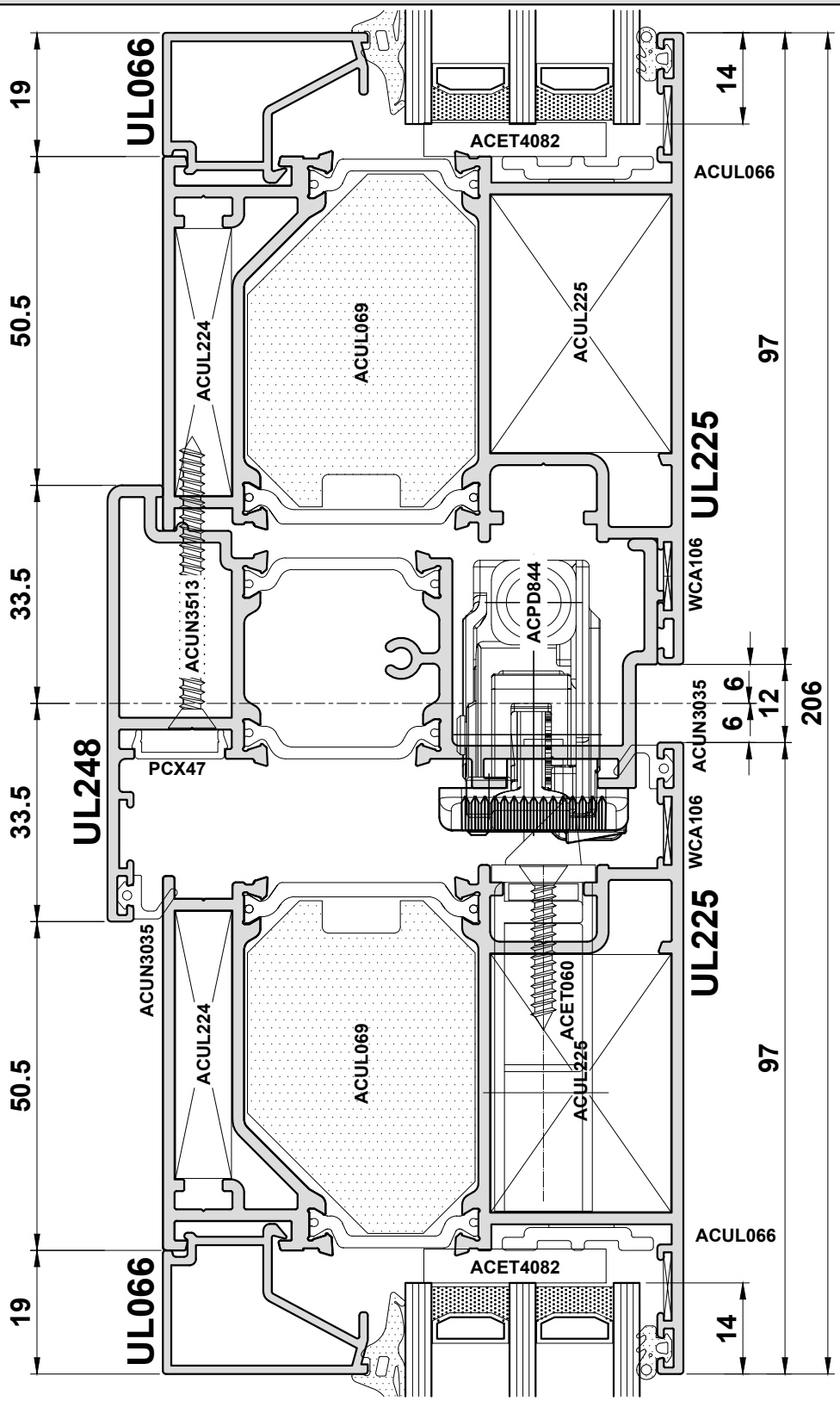

Do Not Scale From This Drawing

Open Out - Detail 13A

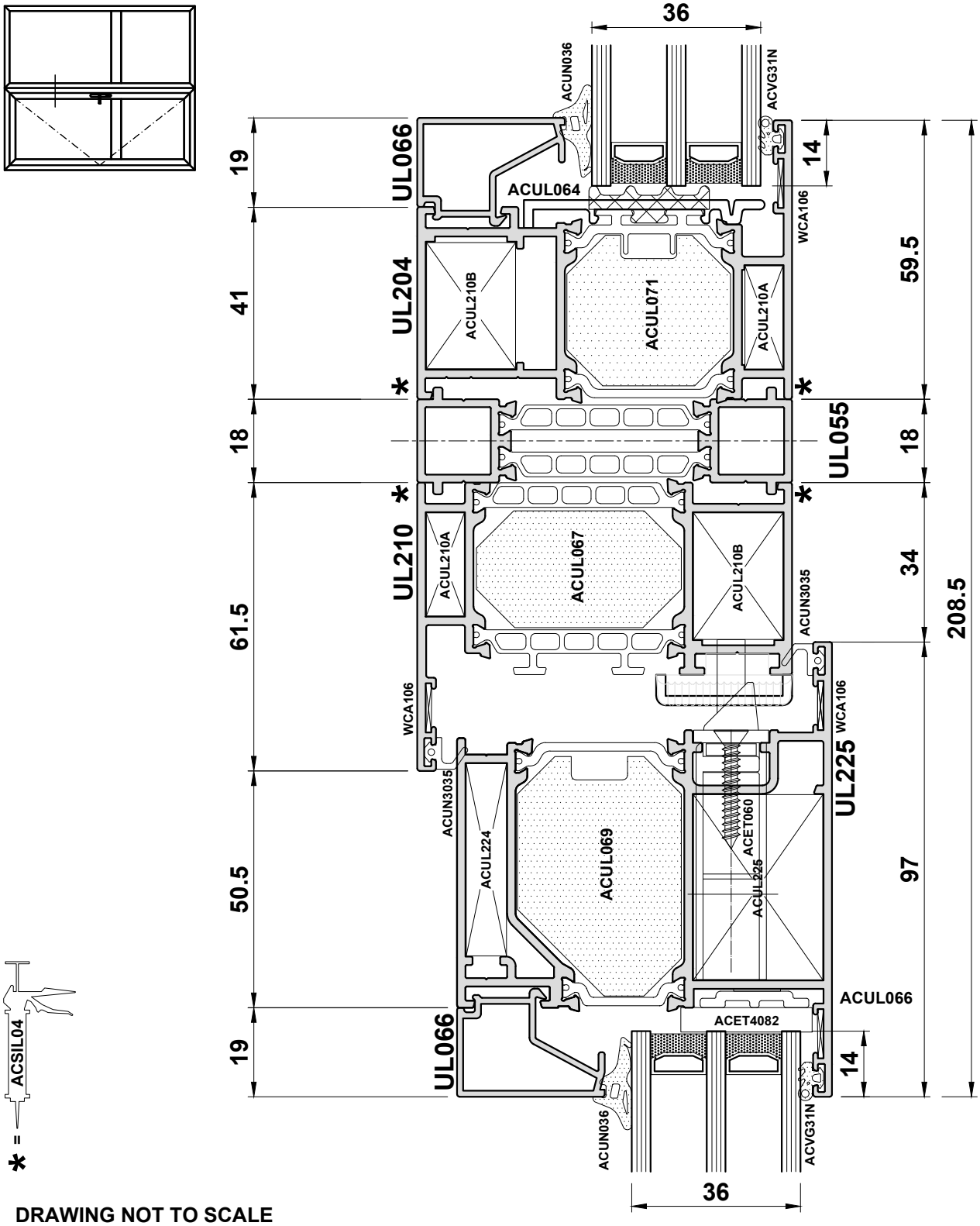

DRAWING NOT TO SCALE

Do Not Scale From This Drawing

Open Out - Detail 13B

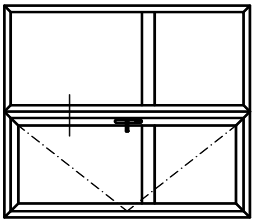

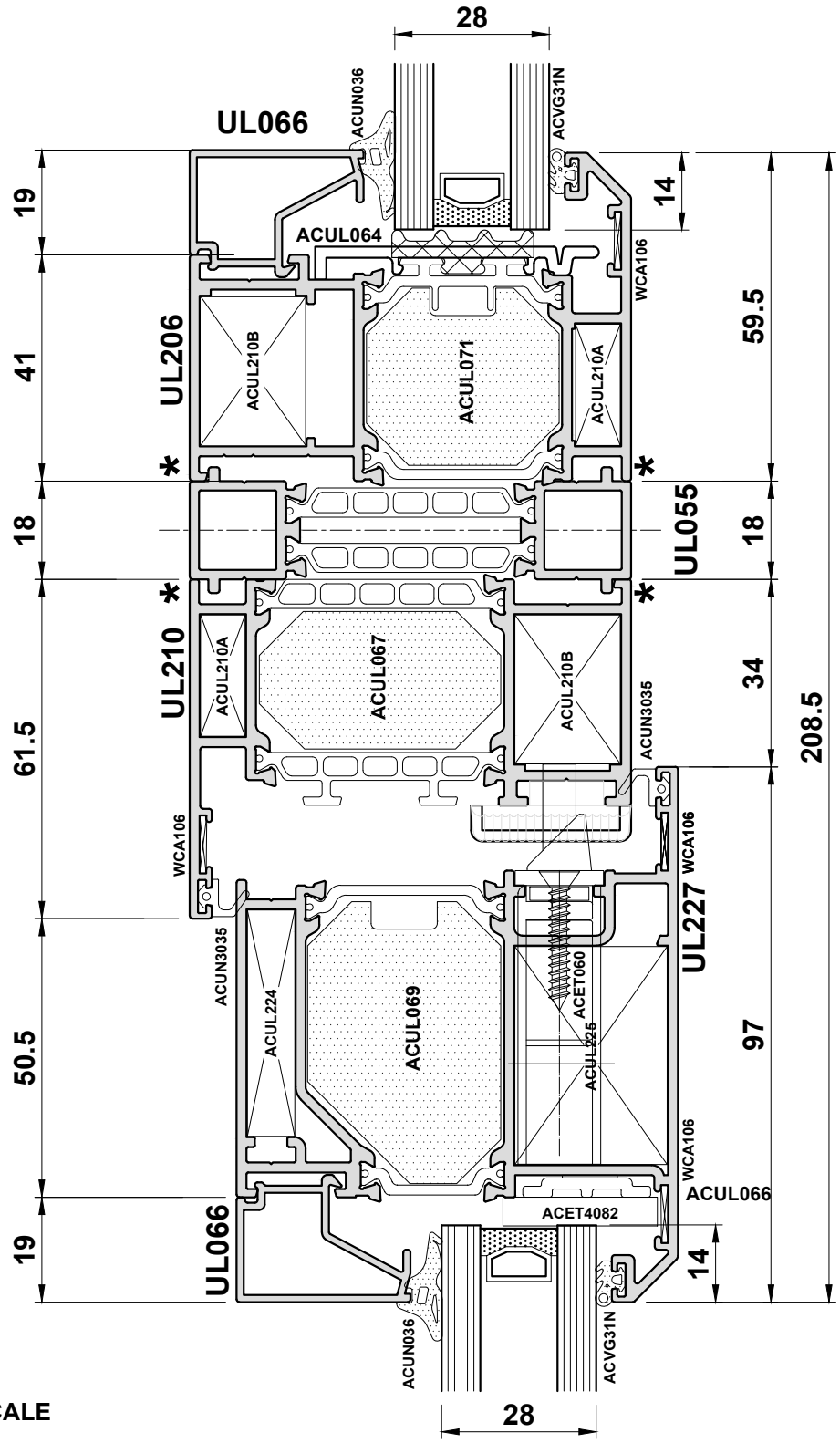

DRAWING NOT TO SCALE

Do Not Scale From This Drawing

Open Out - Detail 14

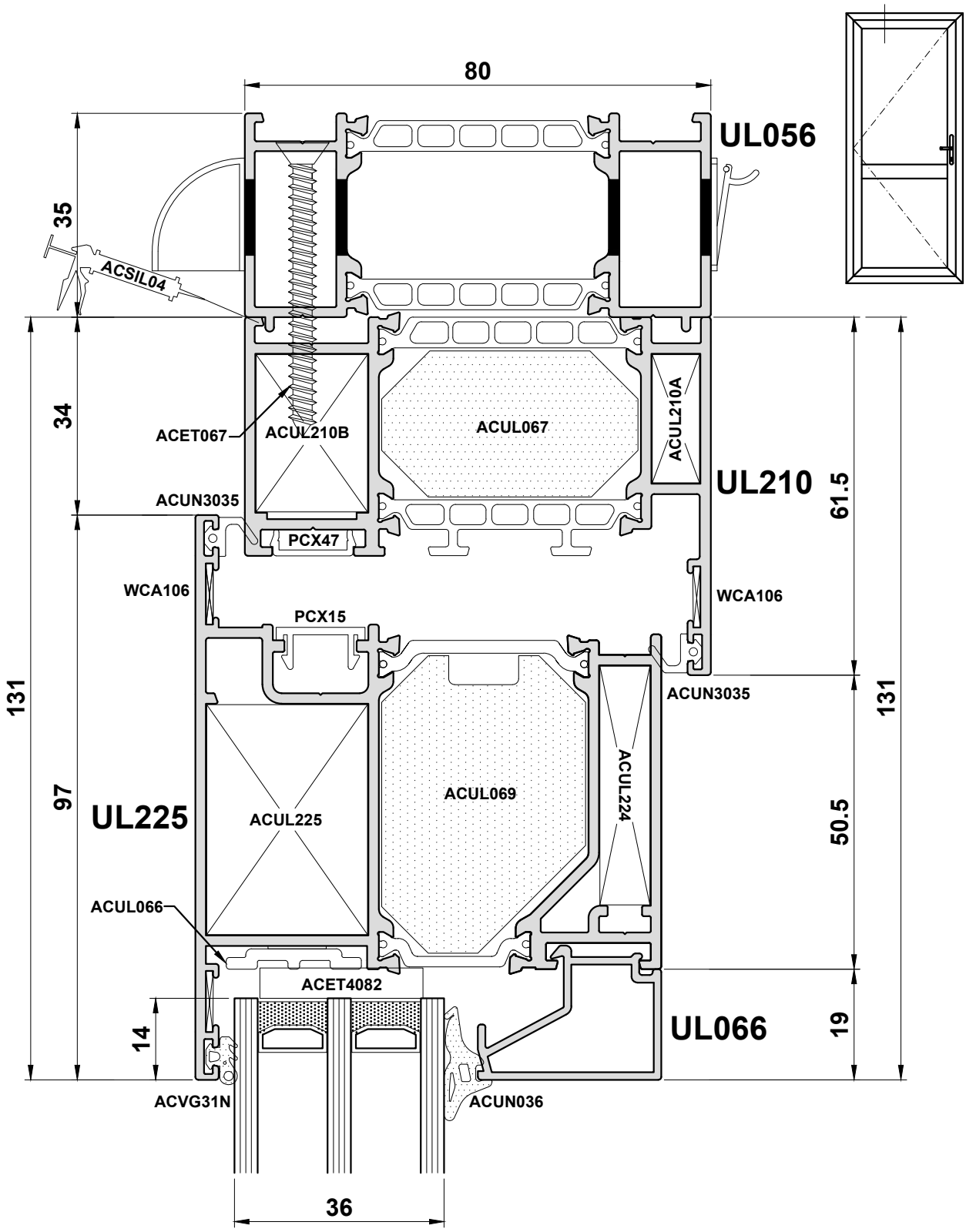

Do Not Scale From This Drawing

Open Out - Detail 15

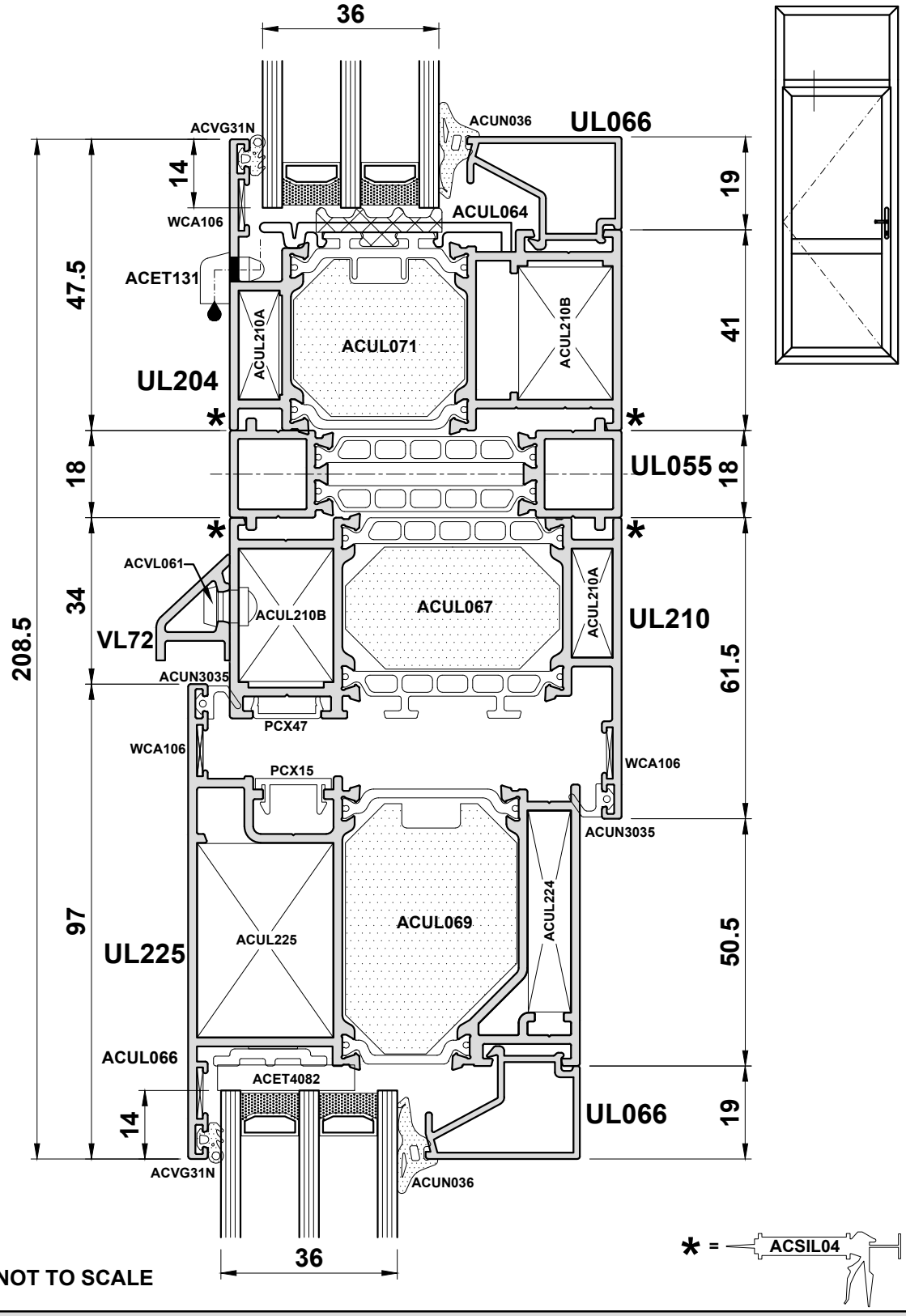

DRAWING NOT TO SCALE

Do Not Scale From This Drawing

Open Out - Detail 16A

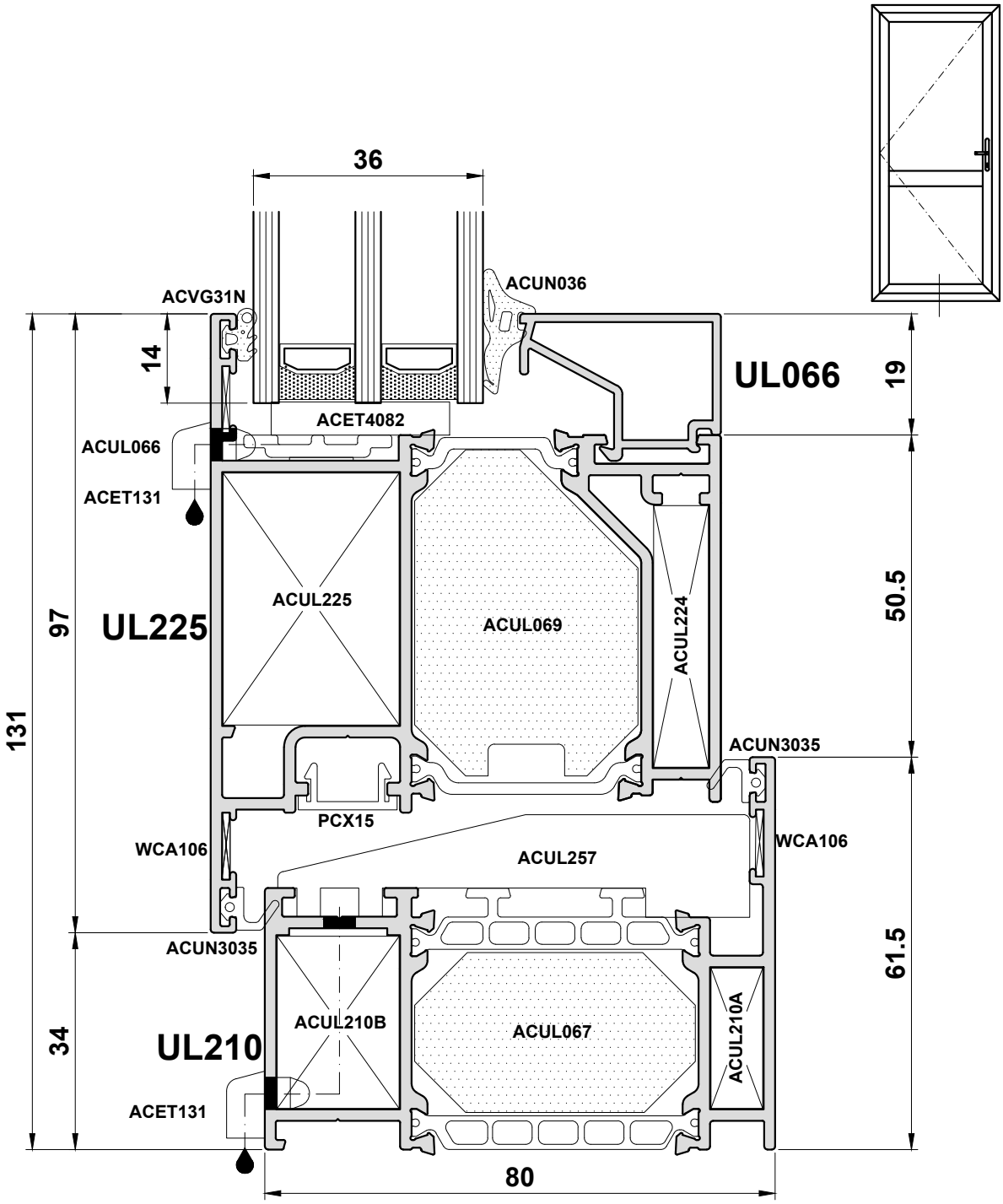

Do Not Scale From This Drawing

Open Out - Detail 16B

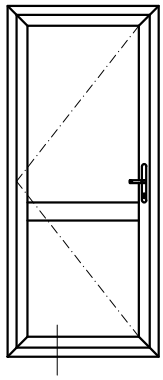

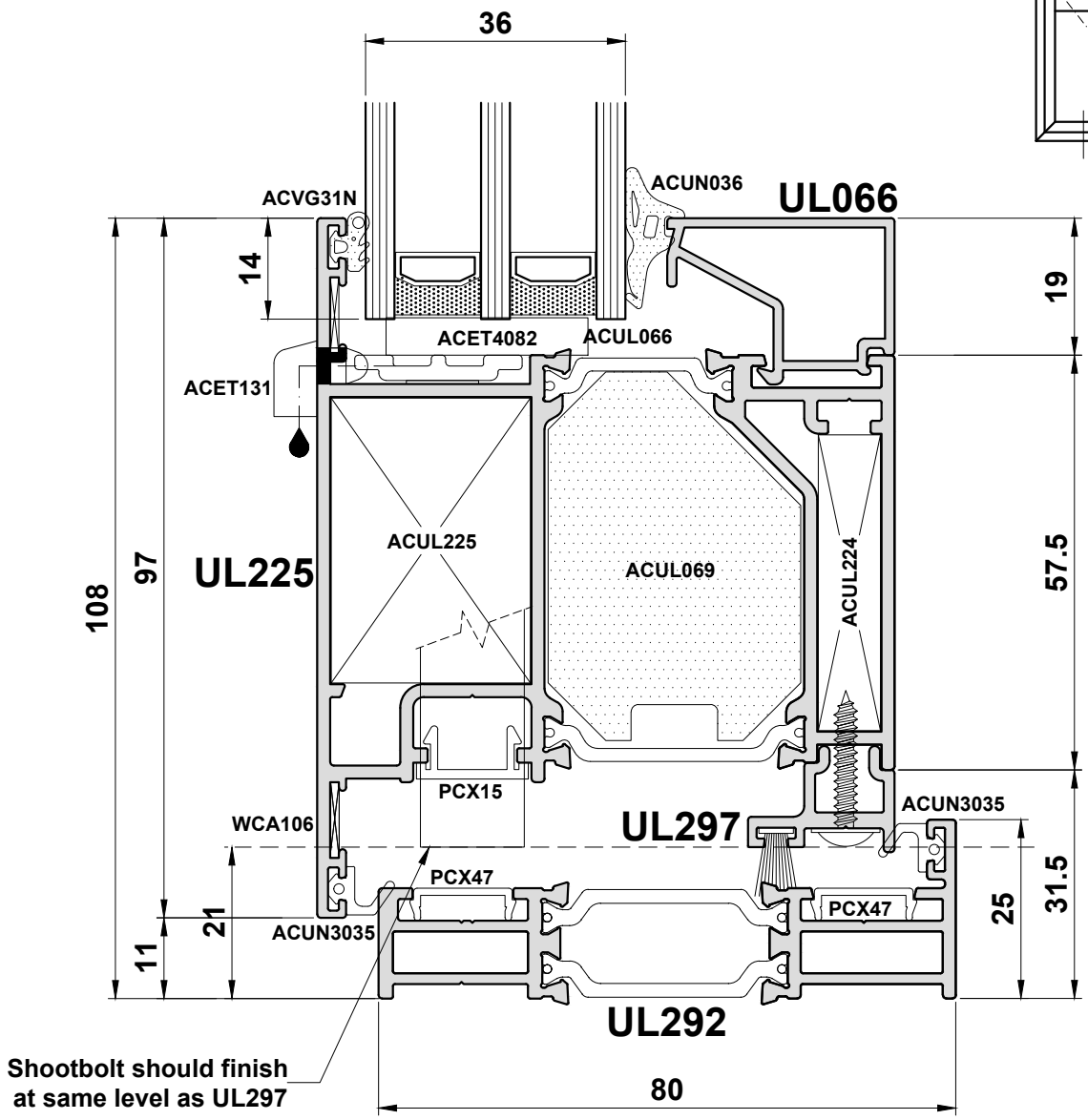

Do Not Scale From This Drawing

Open Out - Detail 16C

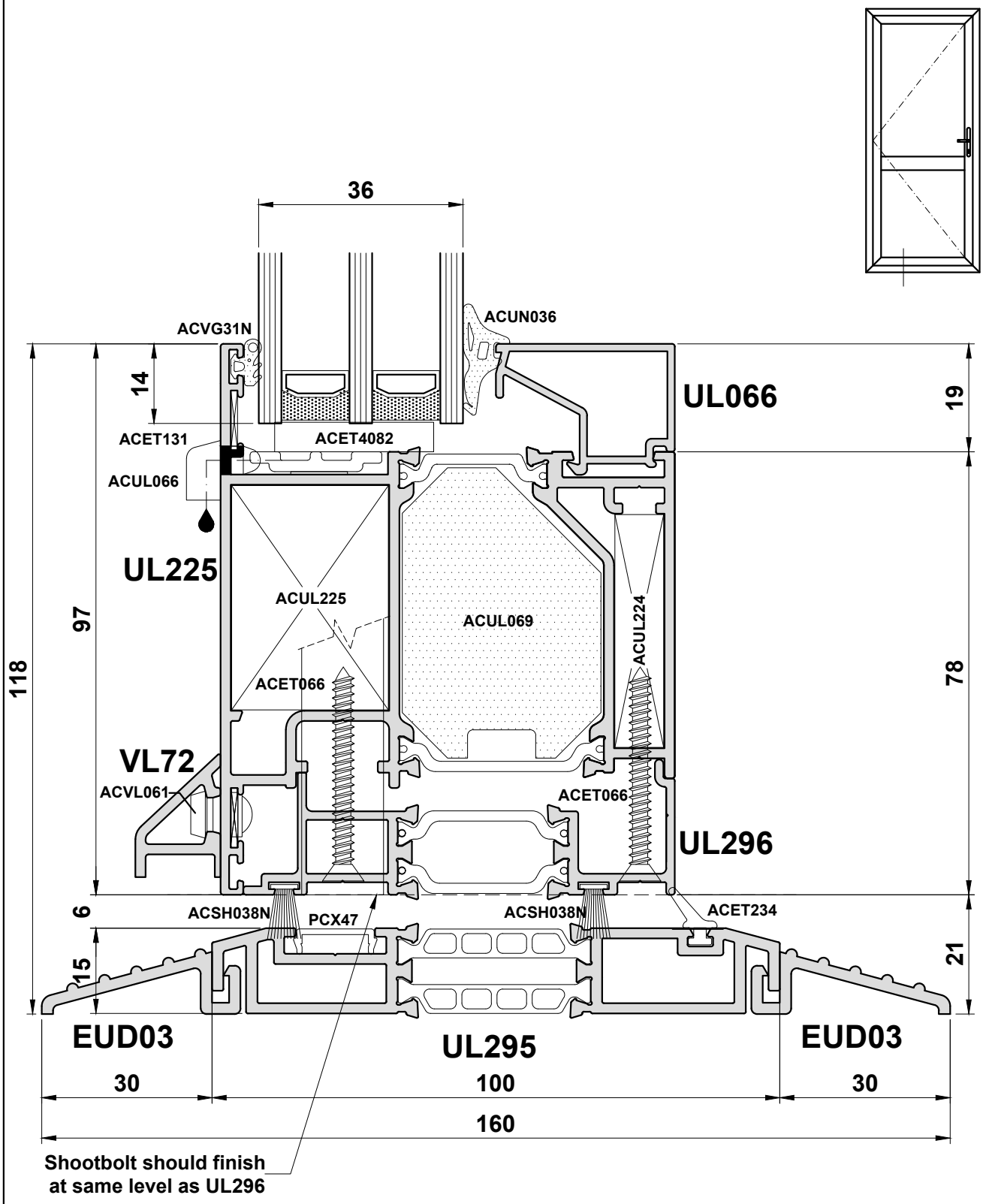

Do Not Scale From This Drawing

Do Not Scale From This Drawing

Section D

Statics

Open Out & In

General Size Limitations are shown on Page A02.

**For Wind Loading Limitations, Please Contact
The Technical Department - T: 01934 833100**

Section E

E UL

Construction Drawings - Open In

General

Corner Joint Details

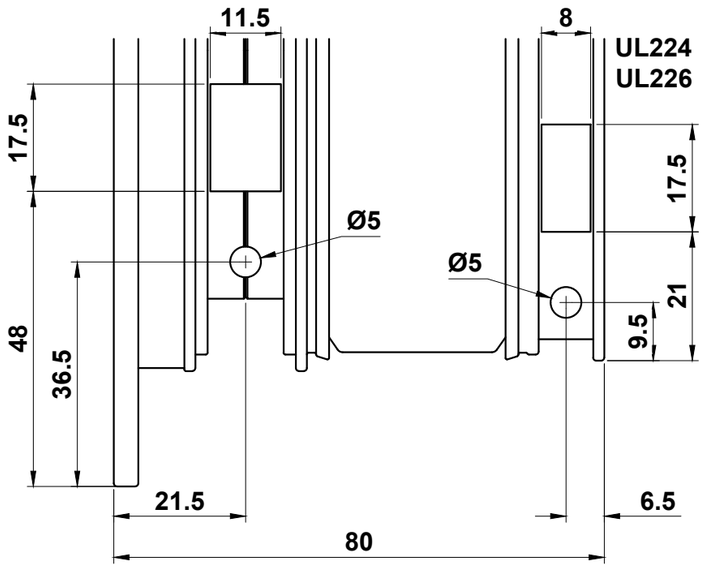

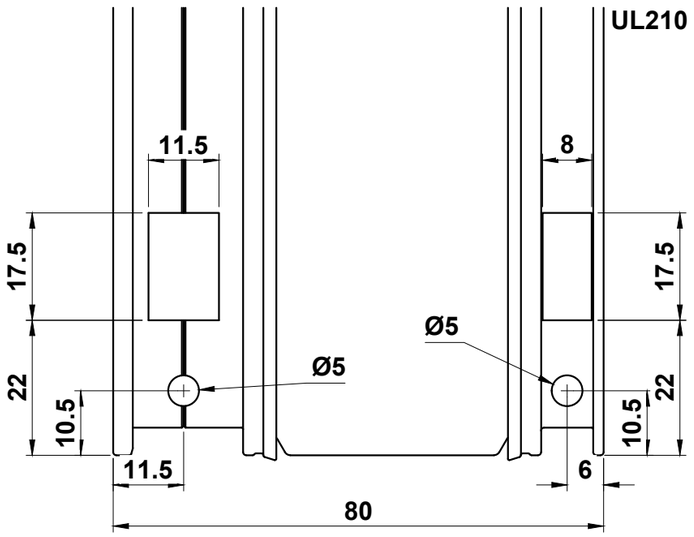

Notes

1. Degrease mitre sections
2. Cover mitred faces with ACSIL04
3. Apply ACSIL013 to cleat chambers
4. Apply ACSIL04 to any fractures formed by crimping to make watertight

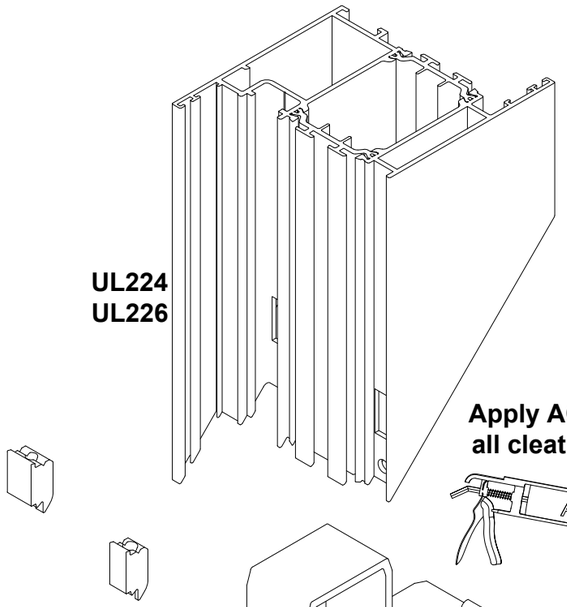

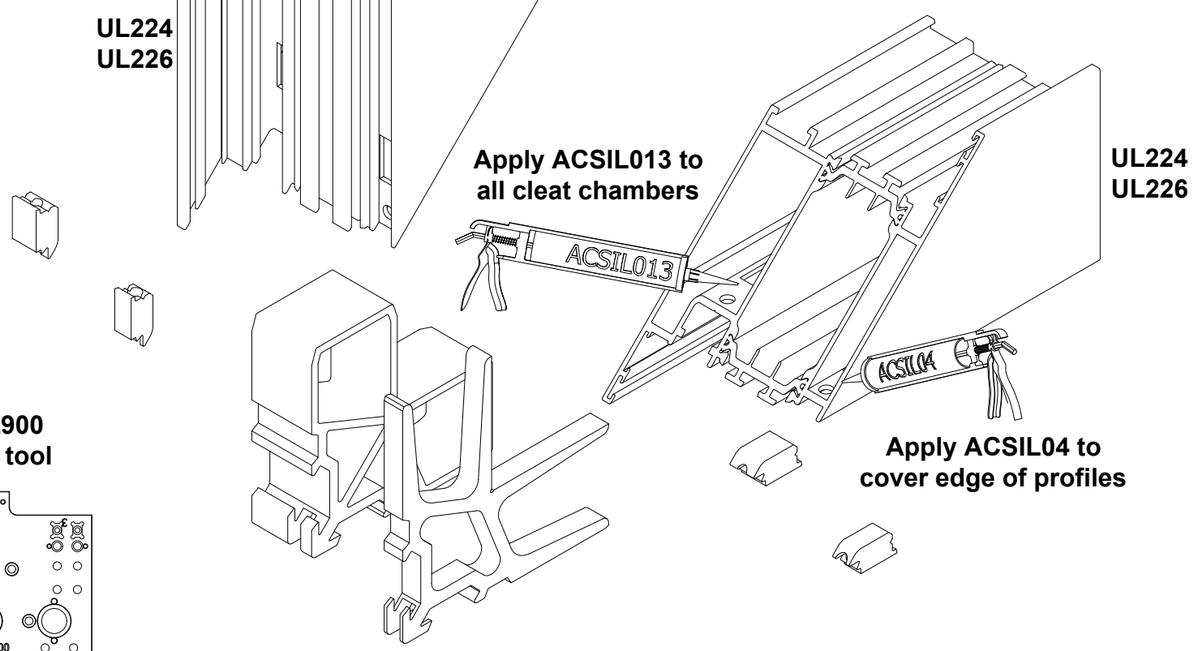

ACUL900
Punch tool

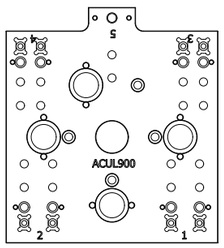

To ensure accurate corners, we recommend the use of support blocks (by others) whilst cutting.

Do Not Scale From This Drawing

ACUL900 Punch Tool

STATION 3 **STATION 4**

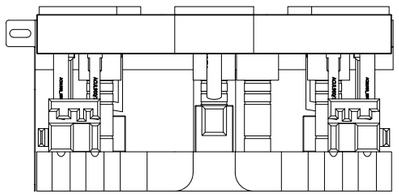

STATION 2 **STATION 1**

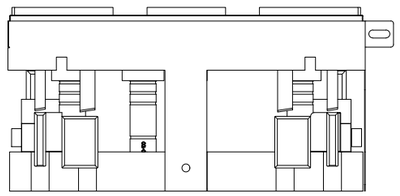

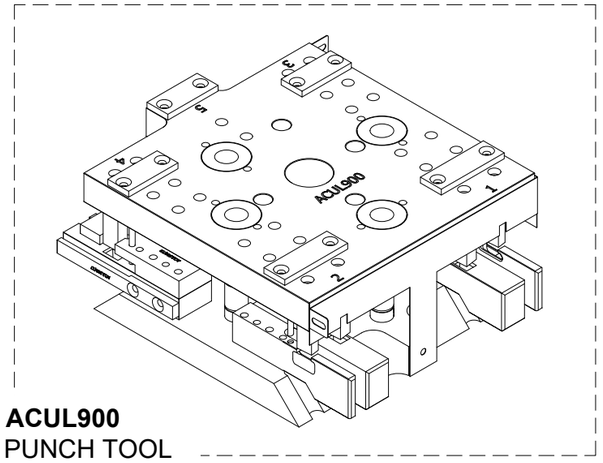

ACUL900
PUNCH TOOL

STATION 3 **STATION 4**

UL204

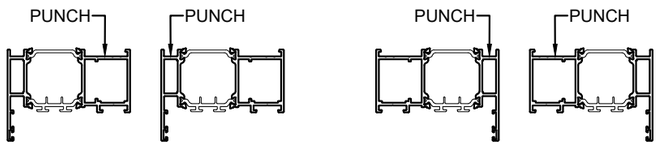

UL206

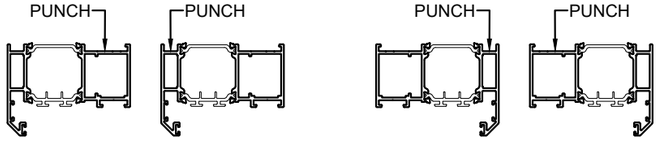

UL210

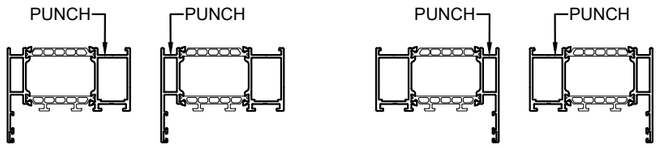

STATION 2 **STATION 1**

UL224

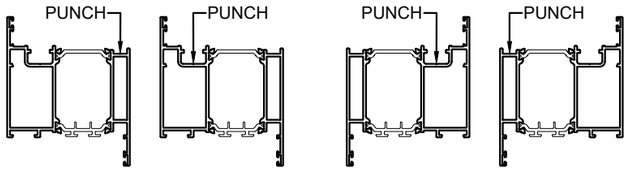

UL225

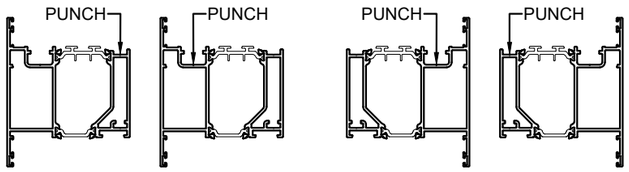

UL226

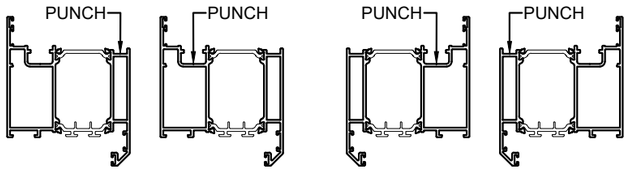

UL227

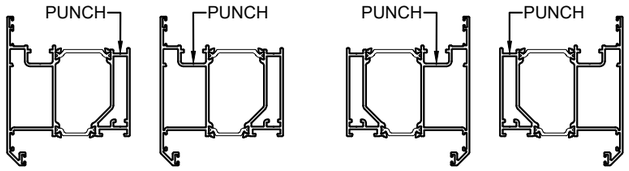

STATION 5

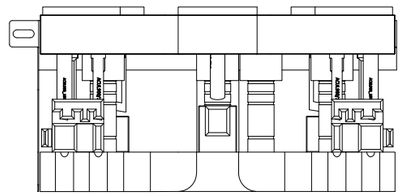

UL210

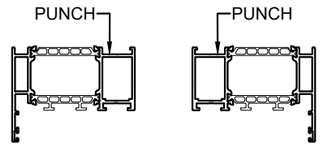

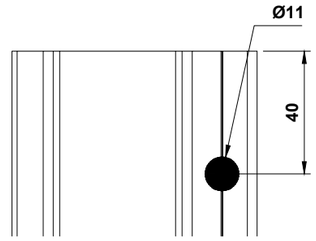

STATION 3 & 4 PREP

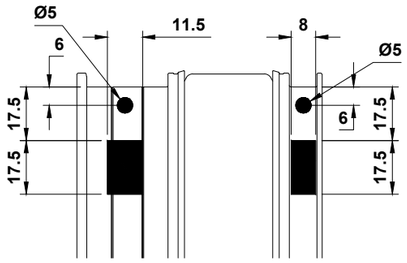

STATION 1 & 2 PREP

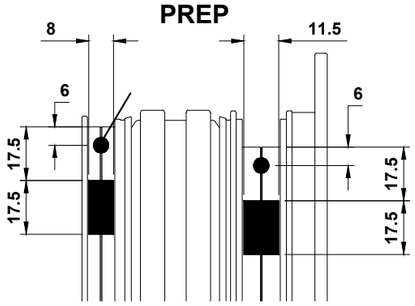

IMPORTANT NOTES:
Do not over-tighten punch tool fixing nut.
Longer profiles should be supported with stands.

Do Not Scale From This Drawing

Low Rebate Threshold Assembly

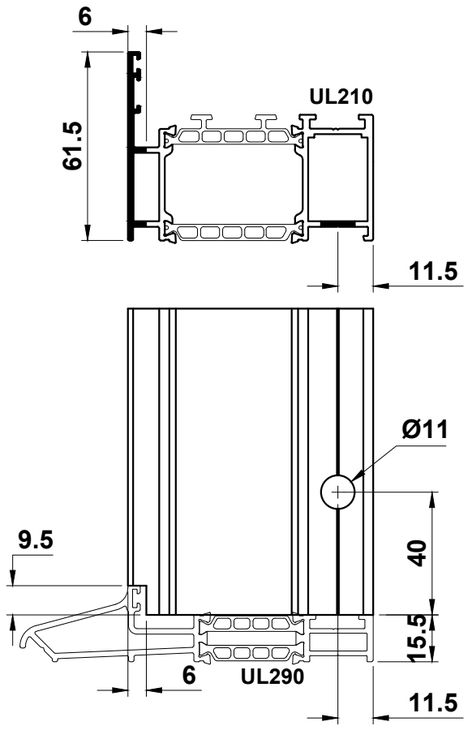

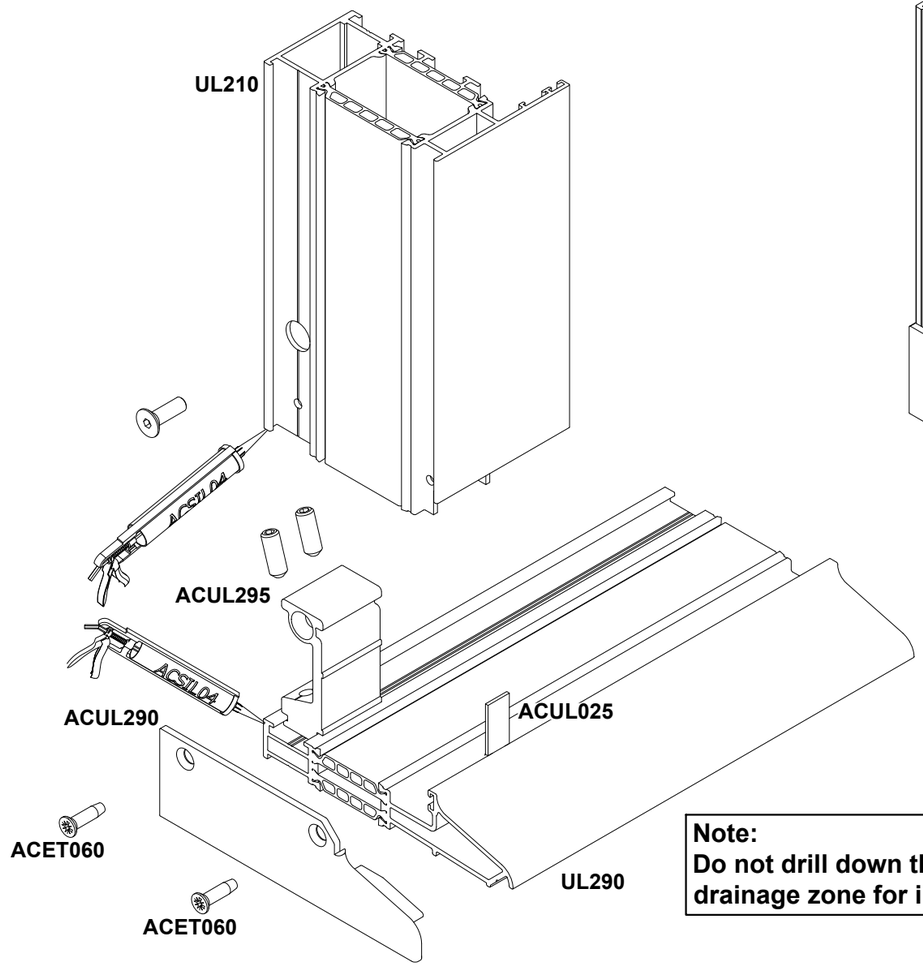

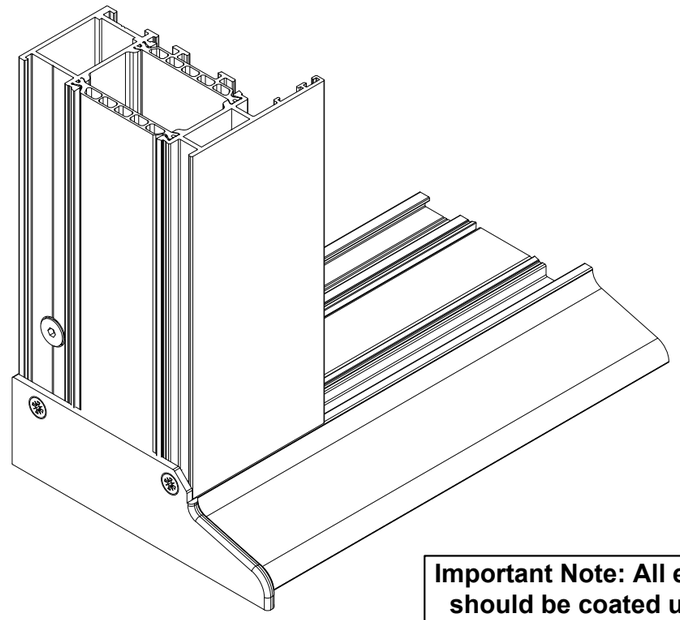

Important Note: All exposed aluminium should be coated using ACSIL014 or painted to match the frame.

Note:
Do not drill down through drainage zone for installation.

Important Note:
Ensure end cap is sealed against threshold to prevent water egress.

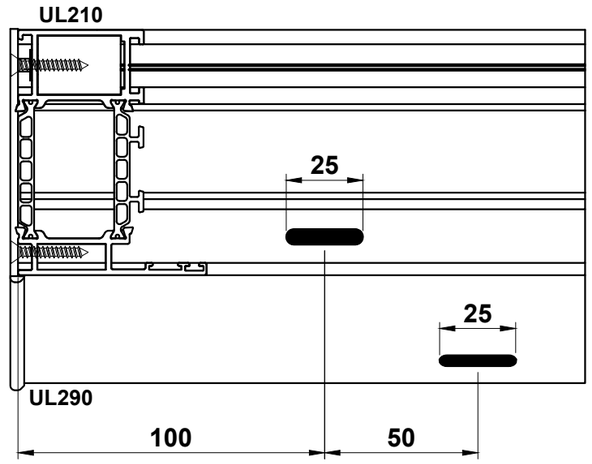

Do Not Scale From This Drawing

Low Ramp Threshold Assembly

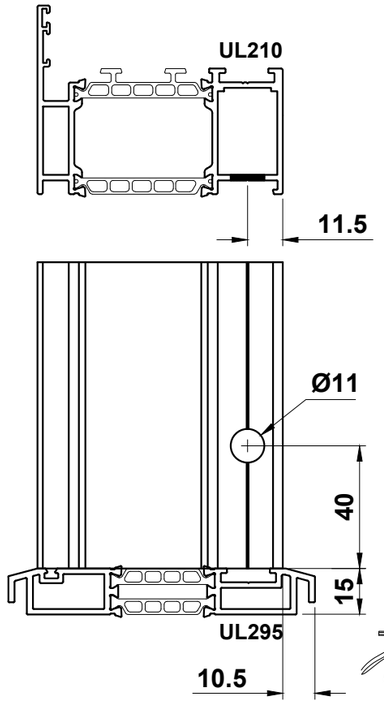

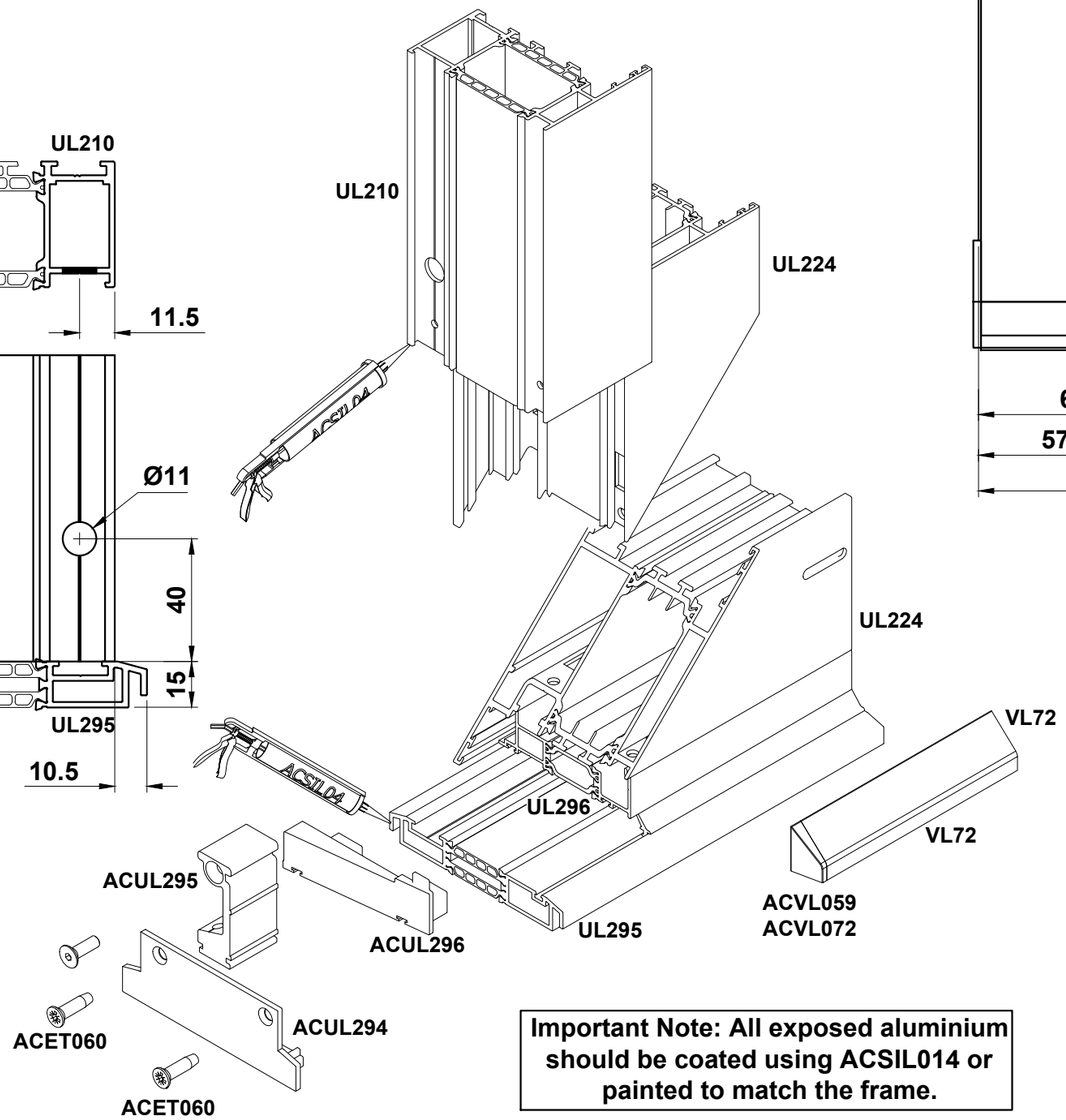

Important Note: All exposed aluminium should be coated using ACSIL014 or painted to match the frame.

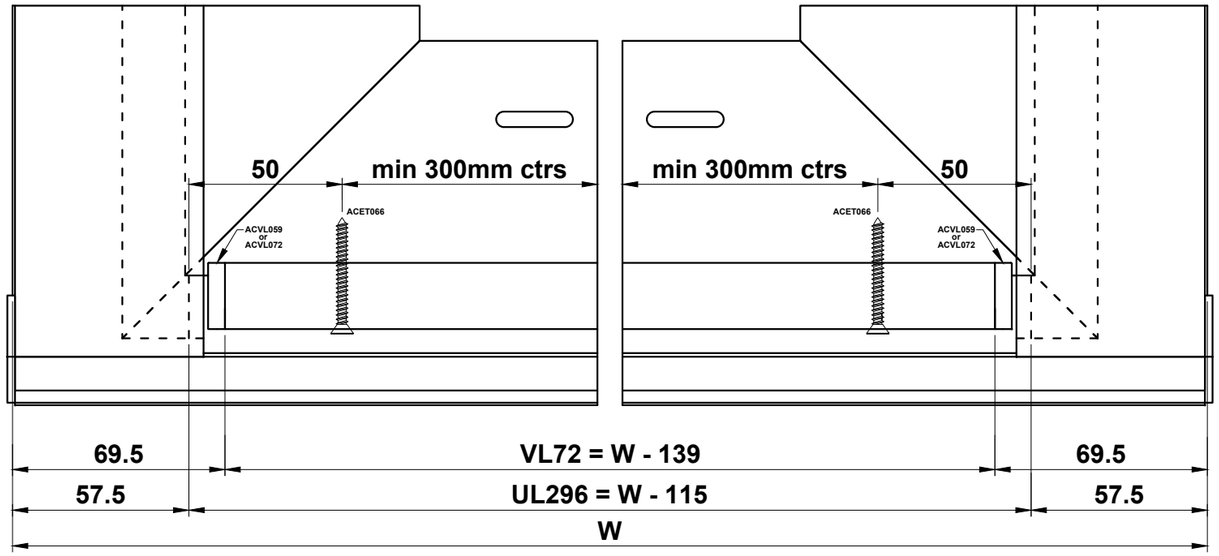

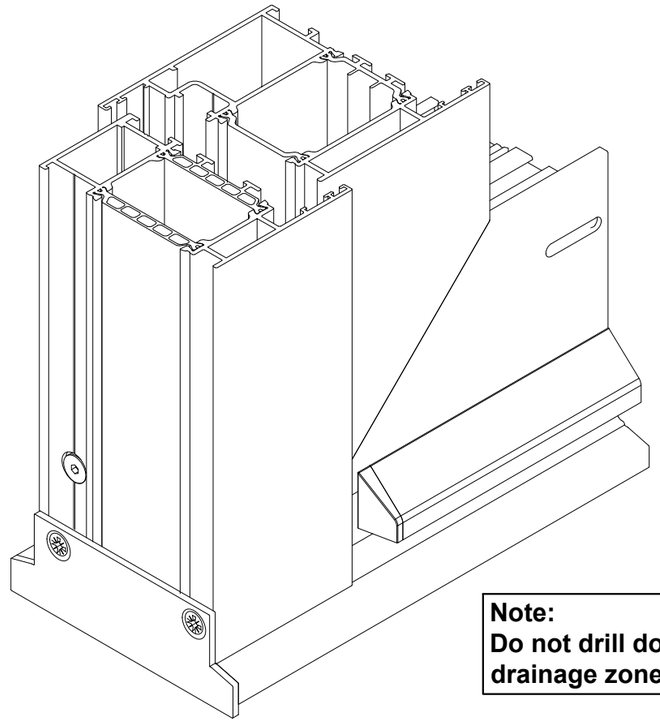

Note:
Do not drill down through drainage zone for installation.

Do Not Scale From This Drawing

Drainage

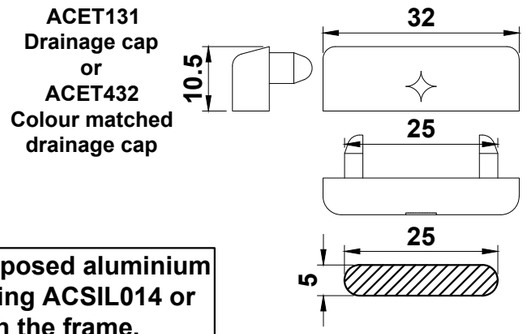

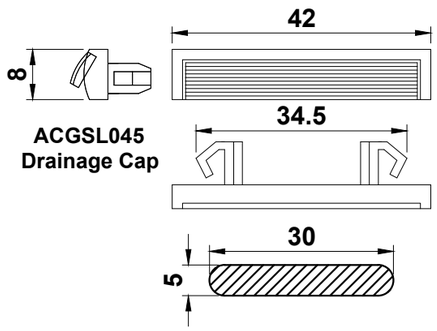

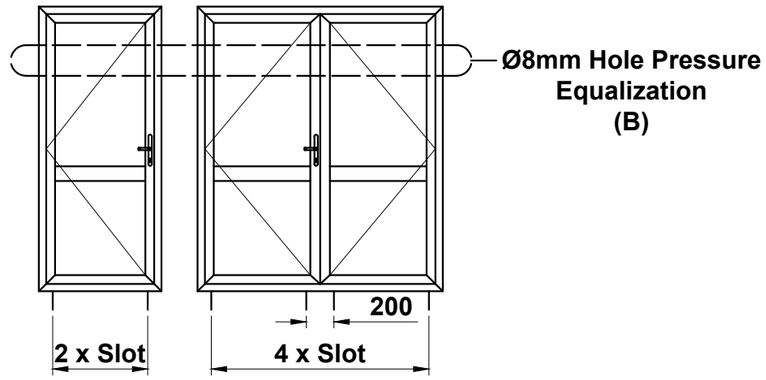

Important Note: All exposed aluminium should be coated using ACSIL014 or painted to match the frame.

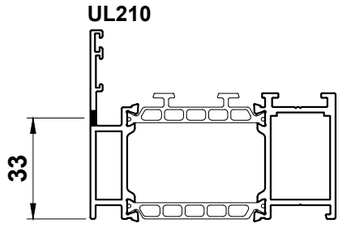

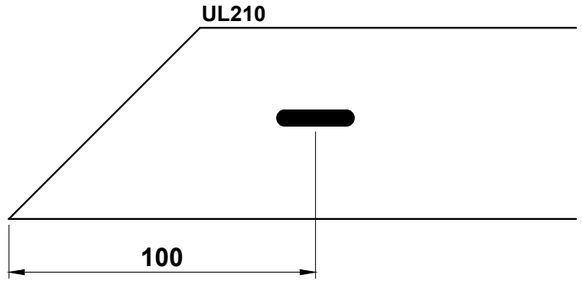

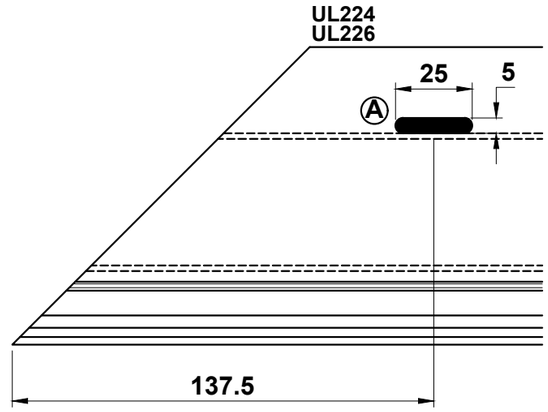

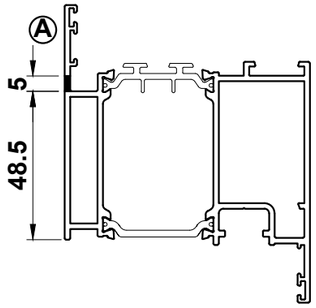

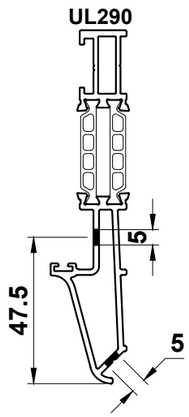

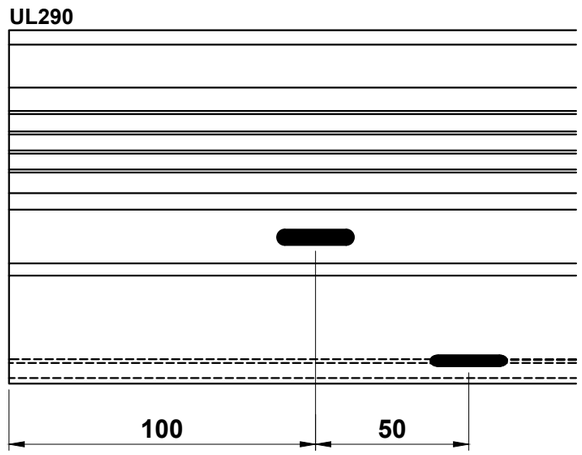

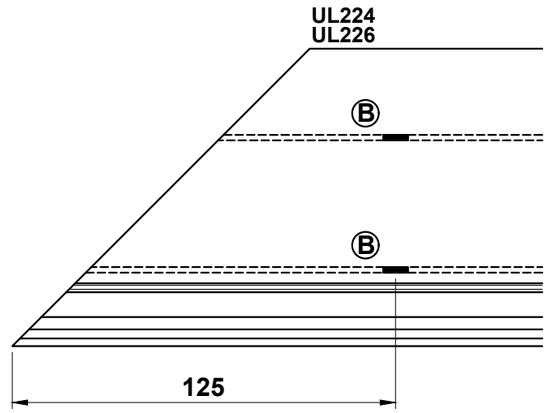

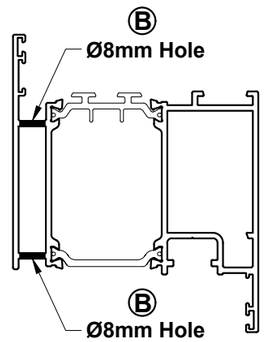

Do Not Scale From This Drawing

Sub Cill Drainage

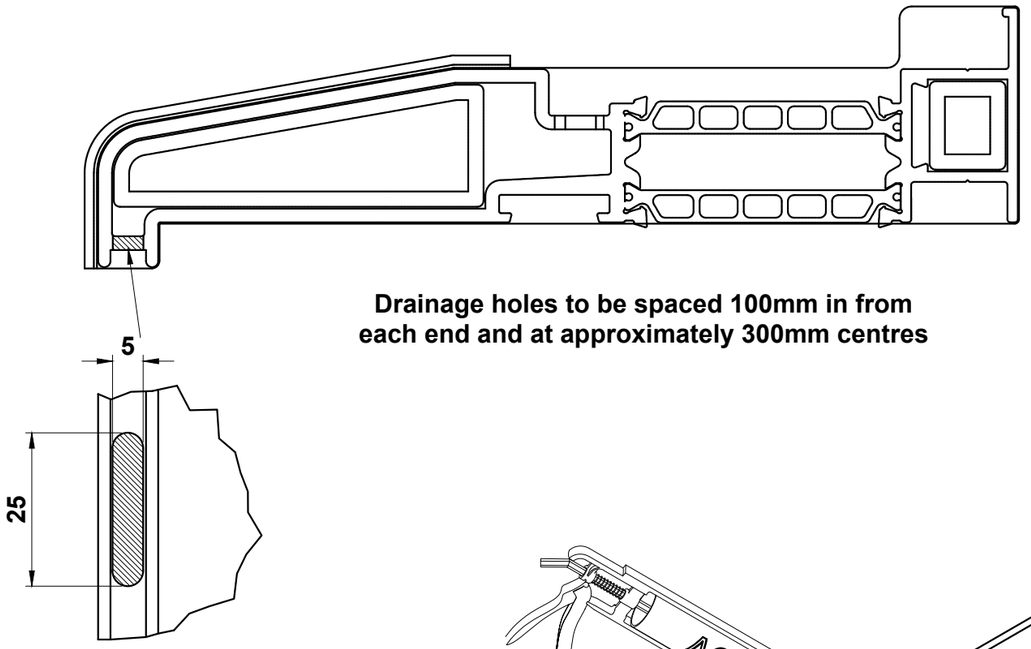

Drainage holes to be spaced 100mm in from each end and at approximately 300mm centres

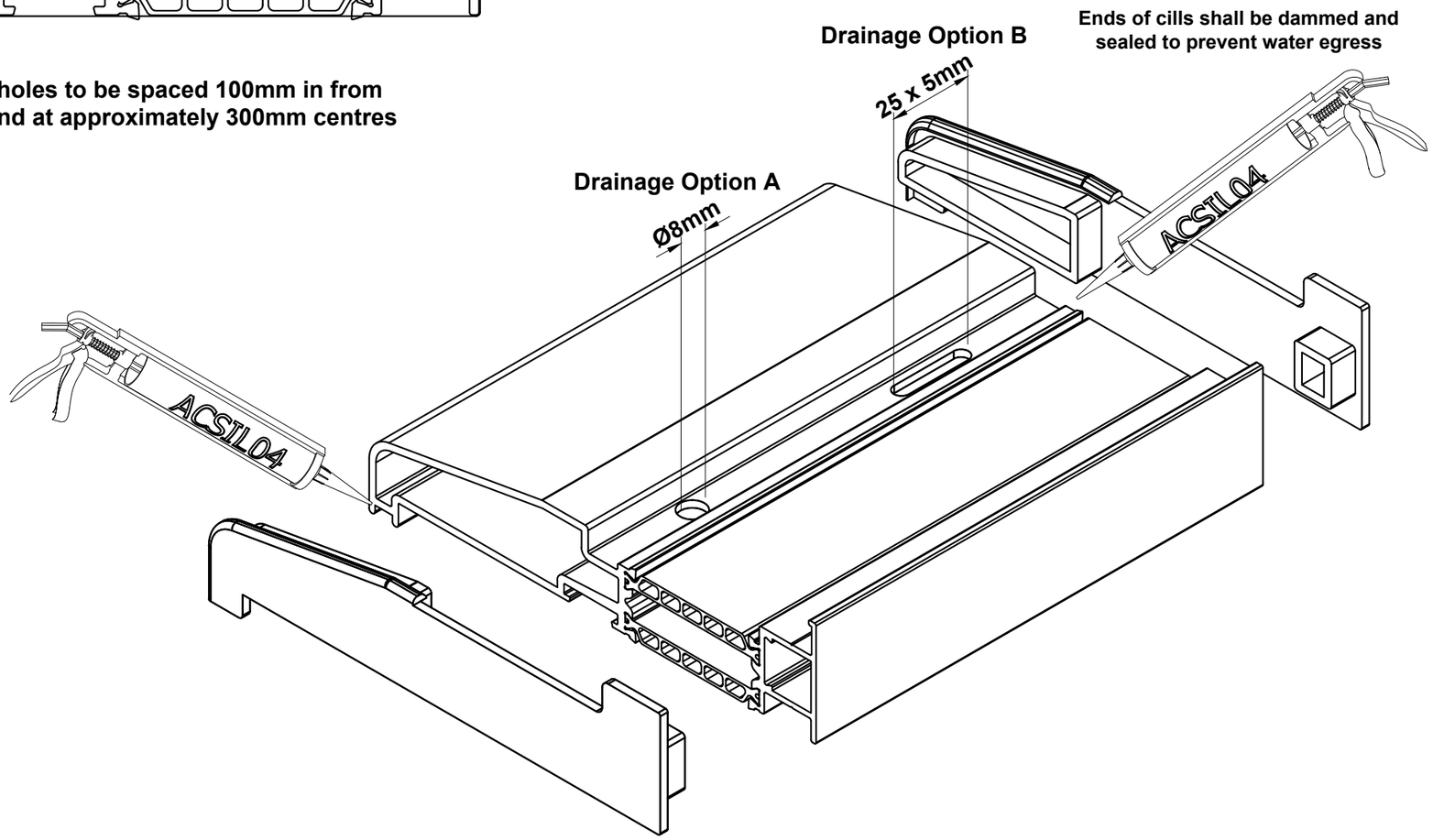

Do Not Scale From This Drawing

Sash - Transom Assembly

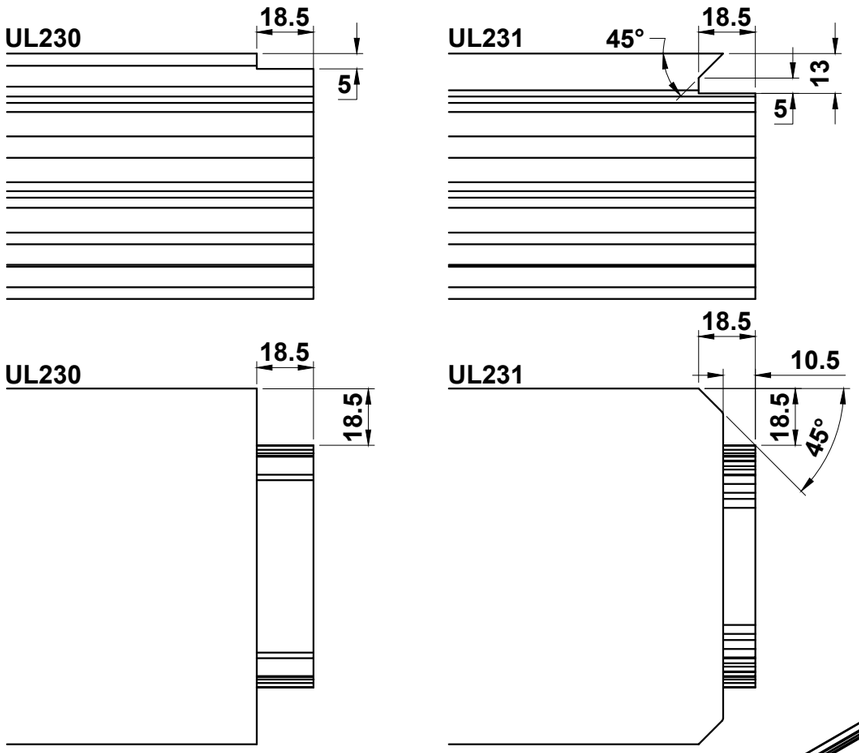

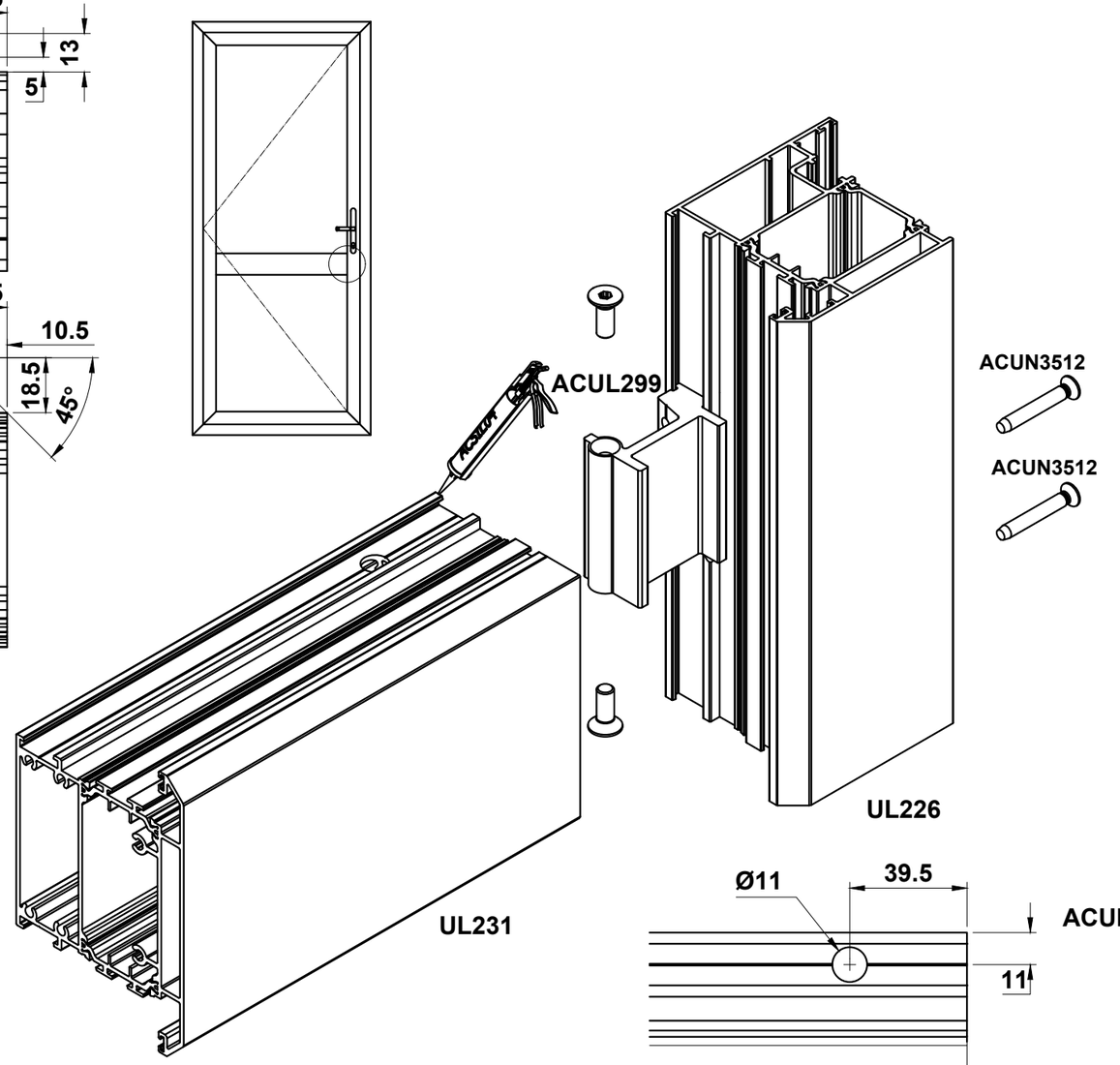

Note: 4 X ACUN3512 can be used to replace ACUL299.

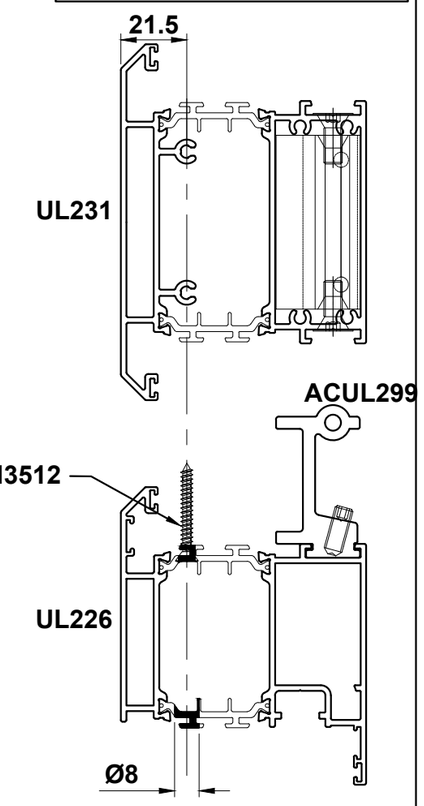

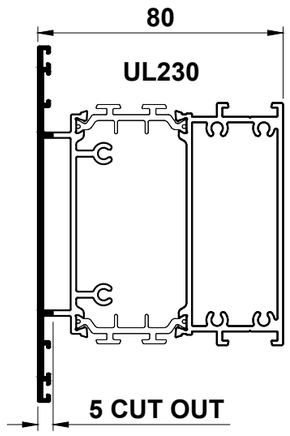

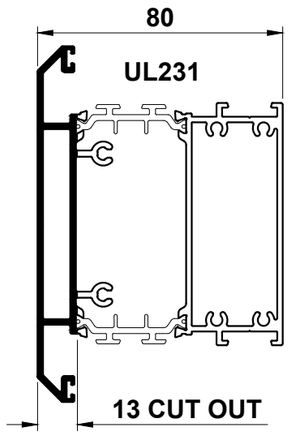

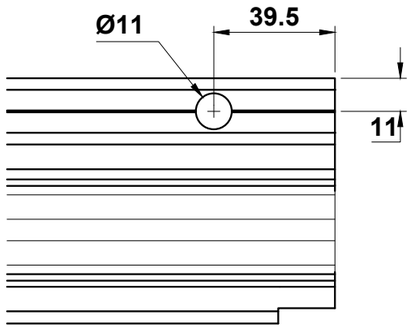

Do Not Scale From This Drawing

Outerframe - Transom Assembly

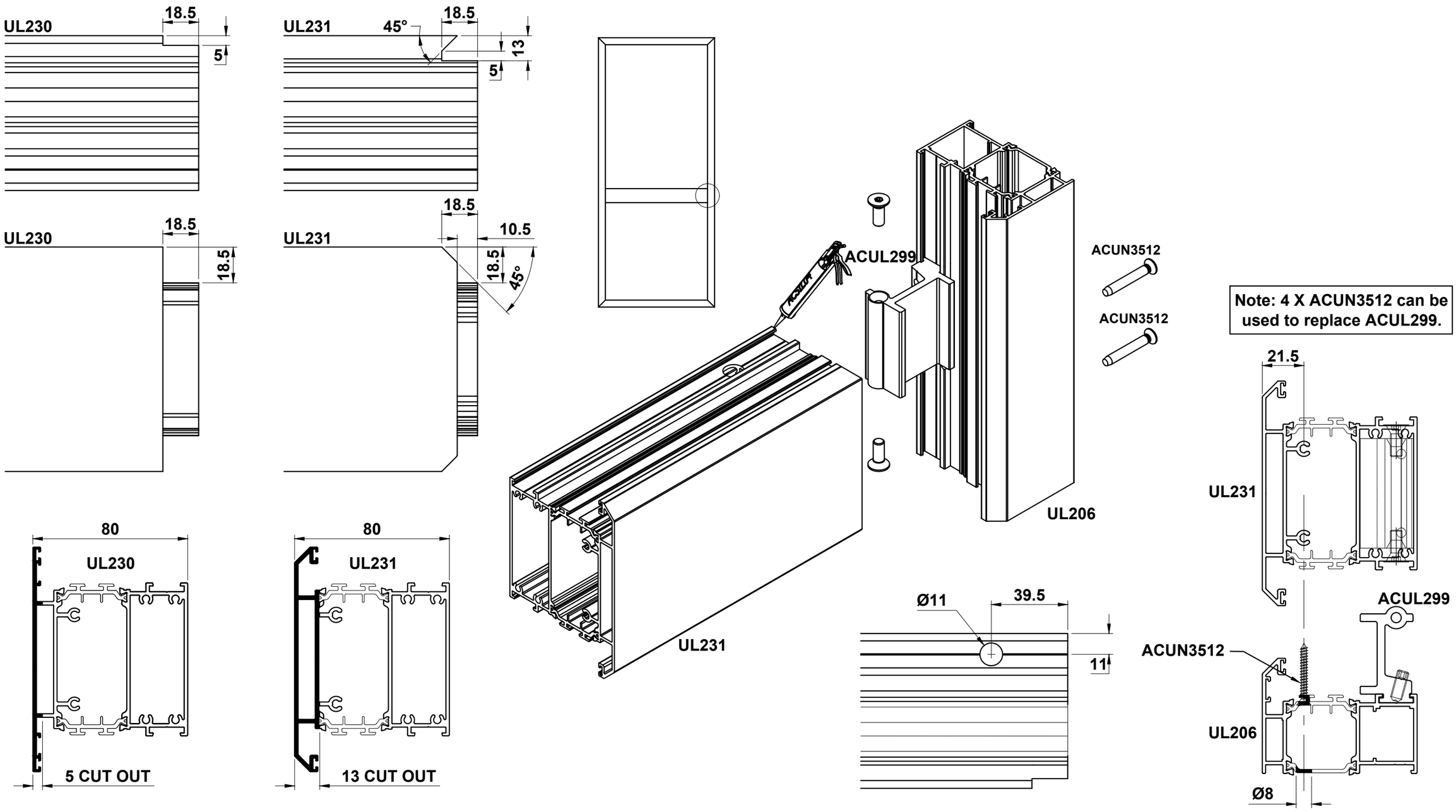

Do Not Scale From This Drawing

Stainless Steel Hardware - ACSM015, ACSM056, ACSM057, ACSM058, ACSM059 Fitting Detail

Please Note:
ACSM057 is compatible with slam locks and key operated locks only.
Slam locks must not have an external handle.

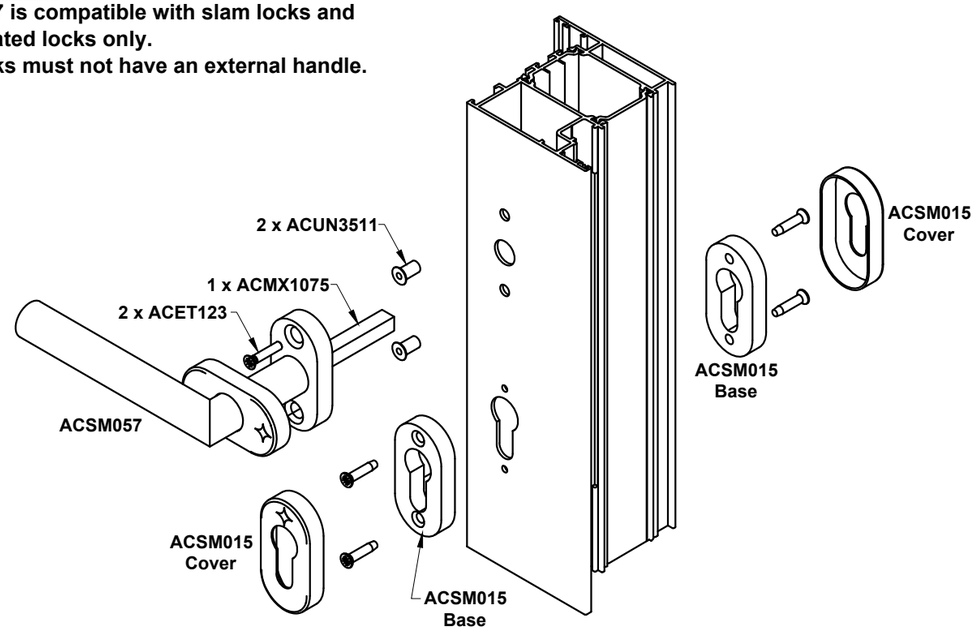

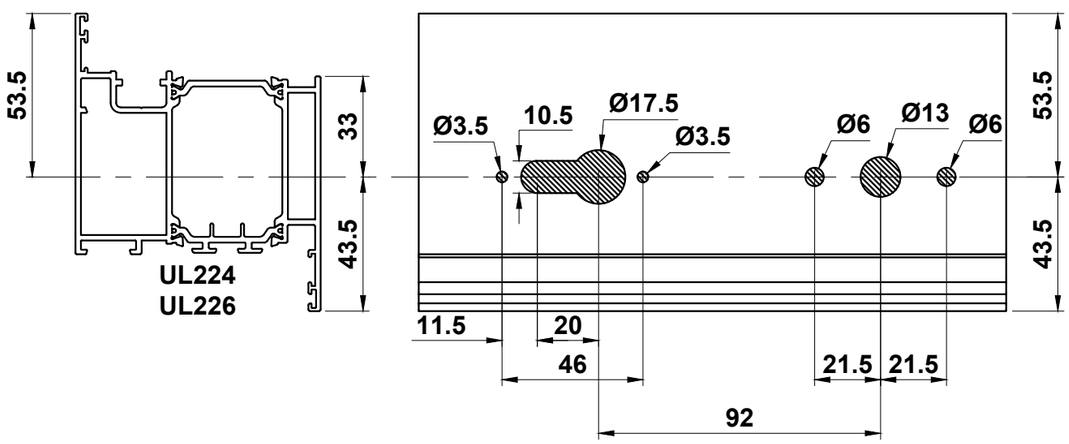

Please Note:
ACSM056 is compatible with all locks.
Slam locks must not have an external handle therefore require WCA134 & ACUN3509 for single side fixing and the spindle will need to be cut down.

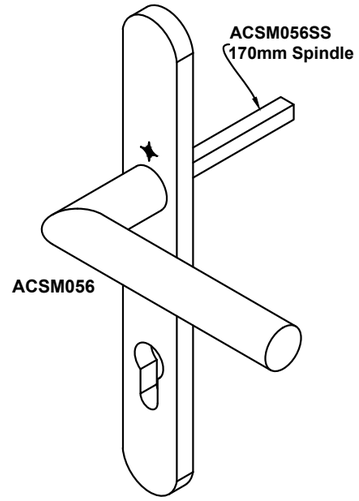

Please Note:
ACSM056SS pack contains;
2 x Universal Backplate & Lever
2 x Cover Plate
2 x Bolt Receiver Sleeve
2 x 40mm M5 Machine Screws
2 X 60mm M5 Machine Screws
1 x 3mm Allen Key
1 x 170mm Spindle

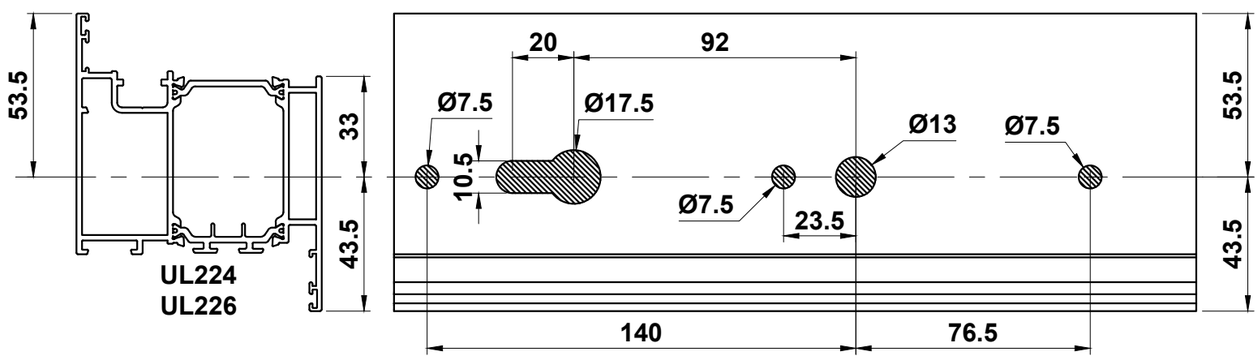

Do Not Scale From This Drawing

Stainless Steel Hardware - Panel Door Details with ACSM020 & ACSM021 Fitting Detail

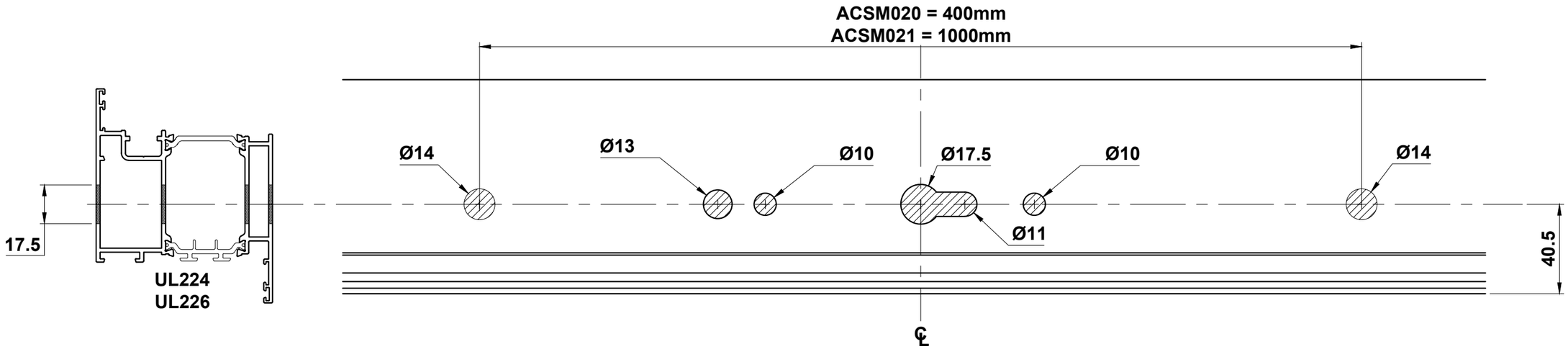

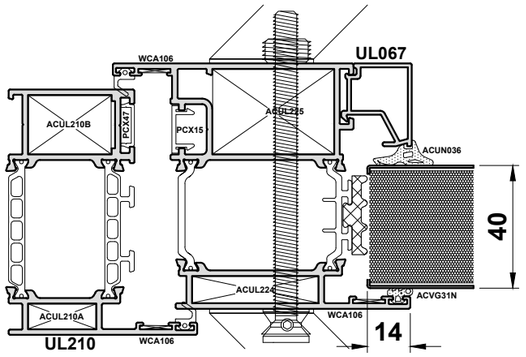

ACSM031 fixing kit is to be used when fixing two back to back handles. Screw will need to be cut down to size.

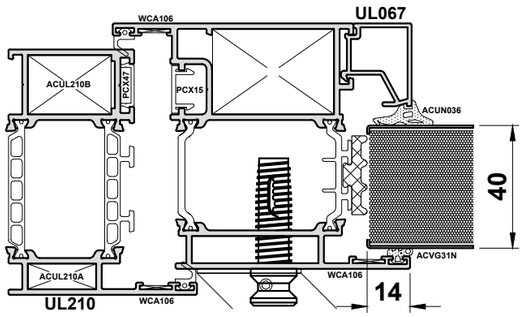

If a single handle is required, please use ACSM037 (400mm) or ACSM038 (1200mm) single handle with ACSM032 Secret fixing.

ACSM015

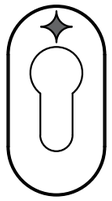

We recommend to use ACSM015 escutcheon and position centre of handle and inline with handle fixings as per prep above

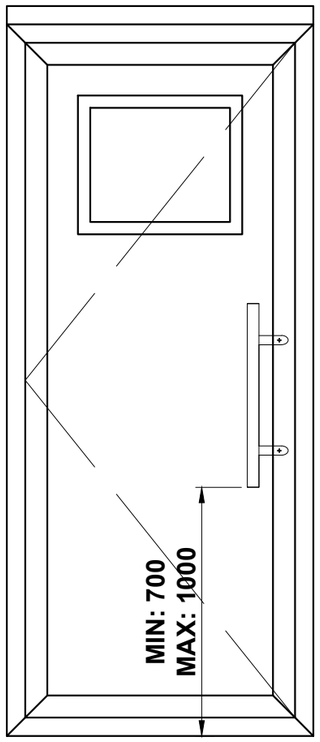

	Length (mm)	Single Handles
	600	ACSM037SS
	1200	ACSM038SS
		Pair Handles
	600	ACSM020SS
	1200	ACSM021SS

Single Sided Fixings
ACSM030
Back to Back Fixings
ACSM031

Do Not Scale From This Drawing

ACUL250 Hinge Preparation

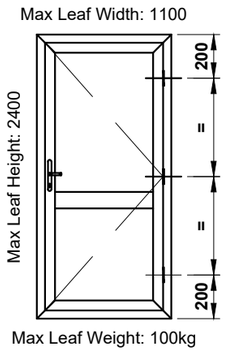

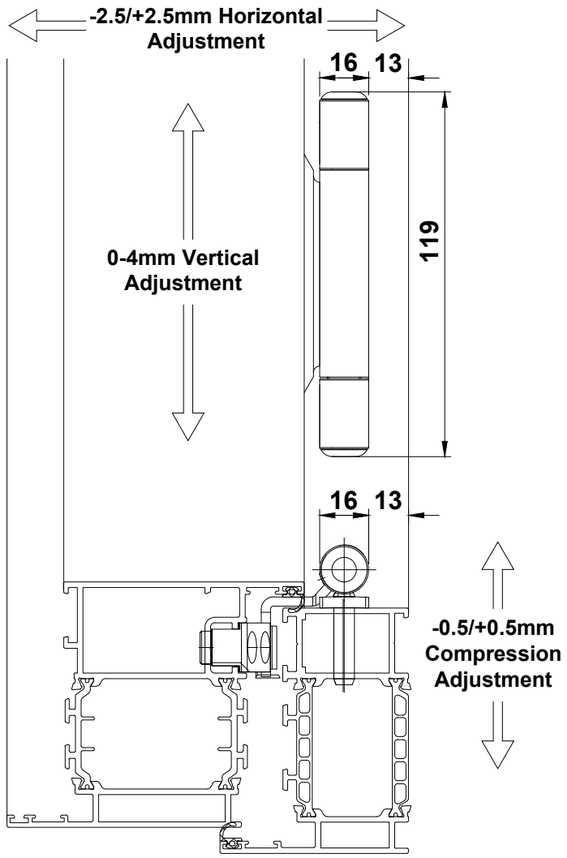

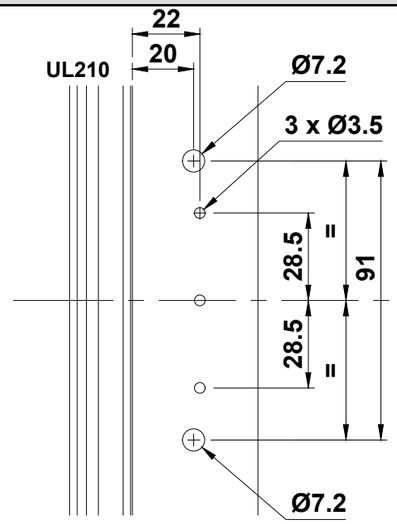

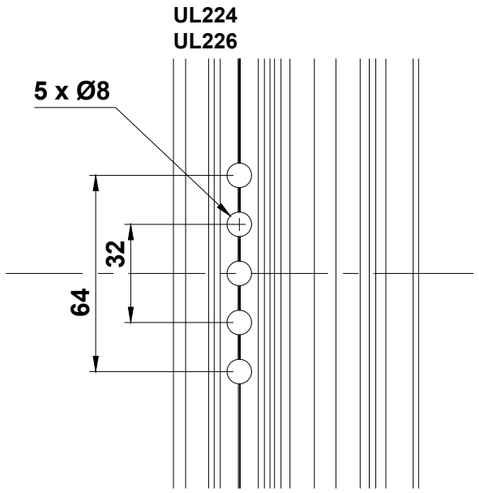

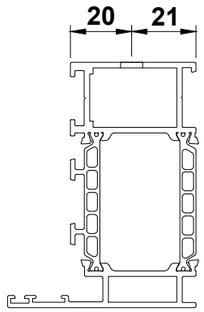

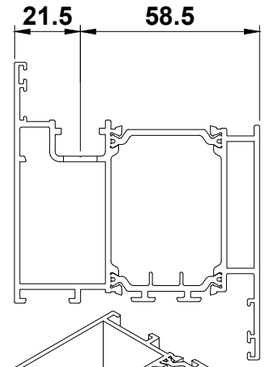

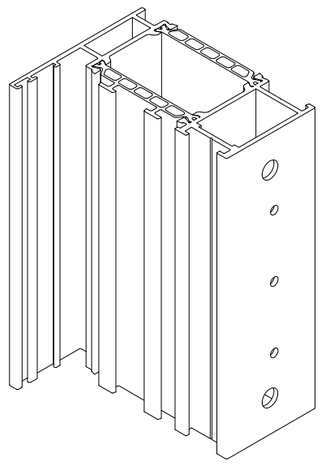

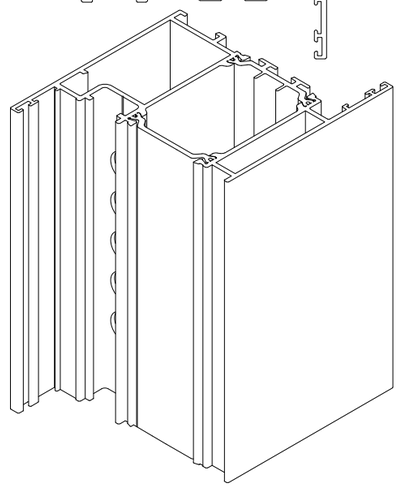

Fitting Instructions:
(Full instructions are supplied with each ACUL250 Hinge)

1. Align outer frame and sash in correct position
2. Clamp drill jig ACUL950 over the centre line of the hinge
3. Drill through all bushes marked '1' with a Ø7.2mm drill bit (supplied) and through all bushes marked '2' with a Ø3.5mm drill bit (not supplied)
4. Fasten the sash plate using ACIM062
5. Fasten the frame plate using ACUN3512 screws ensuring the grub screws are positioned towards the door sash
6. Drive in the central barrel until it lines up with the rings on the frame plate
7. Drive in pin 'B' to the top of the hinge and then drive in pin 'A' to the bottom of the hinge
8. Open the door and lightly tighten the security screws
9. Adjust hinge as required then insert caps and cover caps.

Door Locking & SZ Hardware Options

Slam Lock Guide

Overall Door Height	Spindle Height (X)	Kit Part Number	
		Left Hand	Right Hand
2030-2230	1050	ACUL280	ACUL281
1820-2029	1050	ACUL360	ACUL361
2231-2450	1050	ACUL380	ACUL381

Key Operated Lock Guide

Overall Door Height	Spindle Height (X)	Kit Part Number	
		Left Hand	Right Hand
2030-2230	1050	ACUL282	ACUL283
1820-2029	1050	ACUL362	ACUL363
2231-2450	1050	ACUL382	ACUL383

Note: 1. Height limits apply to all threshold options.
2. The handles shown here are not compatible with lift lever locks.

Handle With Large Backplate Guide

Ext. Handle	Int. Handle	Spindle	Cylinder	Screw	Rivnuts
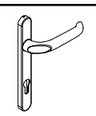	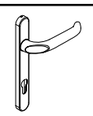	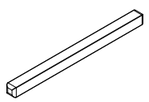	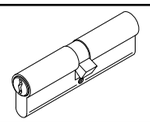	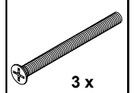 3 x	
ACSZ800	ACSZ801 ACSZ803 ACSZ830 T	ACMX409Sq. Spindle 150mm	ACCY0035 Half Cylinder	ACMX861 M5 x 75mm	
ACSZ802	ACSZ803 ACSZ830		ACCY7035S3 70/35 Cylinder		
ACSZ400	ACSZ803 ACSZ830	ACMX008 Sq. Spindle 60mm	ACCY7035S3 70/35 Cylinder	WCA134 M5 x 20mm	ACUN3509 M5

Keep Handing Guide

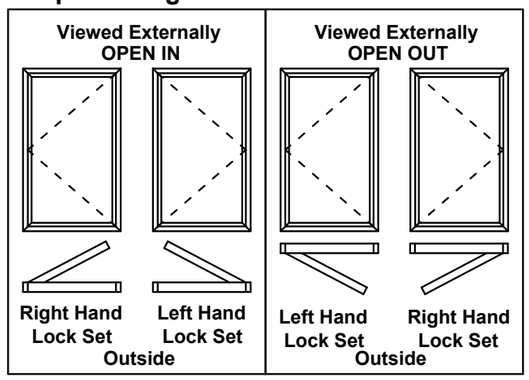

Handle with Small Backplate Guide

Ext. Handle	Ext. Escutcheon	Int. Handle	Int. Escutcheon	Spindle	Cylinder	Screw	Rivnuts
	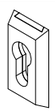		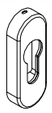	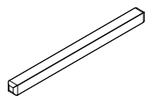	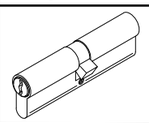		
ACSZ837	ACSZ400	ACSZ836	ACMX208	ACMX409Sq. Spindle 150mm	ACCY3570S3 ACCY0035	WCA134 M5 x 20mm	ACUN3509 M5
	ACSZ400			ACMX008 Sq. Spindle 60mm	ACCY3570S3 ACCY0035	WCA134 M5 x 20mm	ACUN3509 M5
ACSZ837	ACSZ400	ACSZ827		ACMX409Sq. Spindle 150mm	ACCY3570S3 ACMX0035	WCA134 M5 x 20mm	ACUN3509 M5

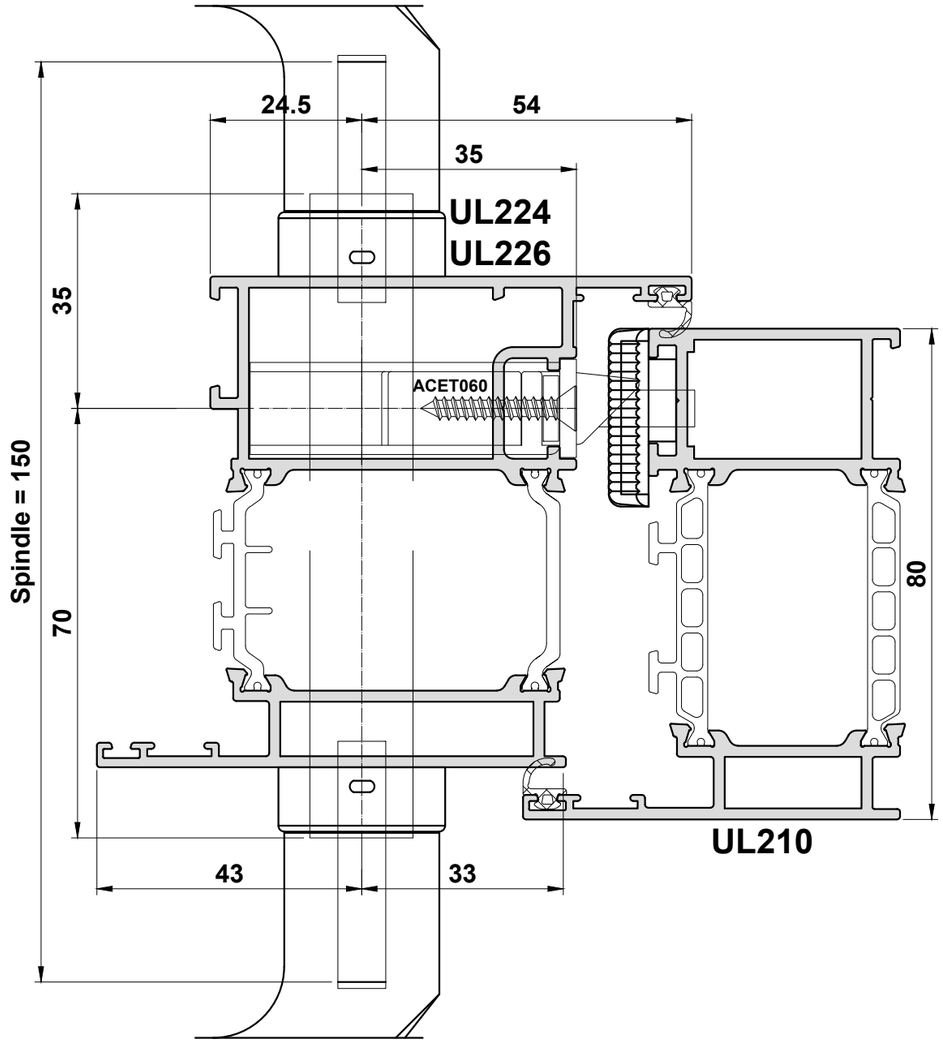

With Cylinder
Without Cylinder
T Handle With Cylinder
T Handle Without Cylinder

Do Not Scale From This Drawing

Lock Overview of Single and Double Doors

Finger Bolt Locking Options

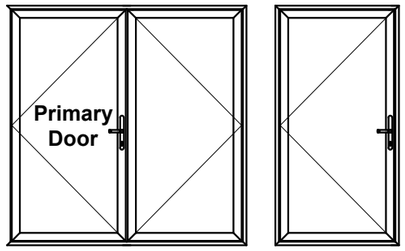

Single & Primary Door Lock Selection

Overall Sash Height	Lift Lever		Slam Lock		Key Wind	
	Left	Right	Left	Right	Left	Right
2030-2230 (Standard)	ACUL272	ACUL273	ACUL280	ACUL281	ACUL282	ACUL283
1820-2029 (Short)	ACUL377	ACUL378	ACUL360	ACUL361	ACUL362	ACUL363
2231-2450* (Tall)	ACUL374	ACUL375	ACUL380	ACUL381	ACUL382	ACUL383

*Any doors above 2450mm are above the tested limit.

Secondary Door Accessory Selection

35mm Backset Shootbolt Adaptor	Bottom 10mm Dia Rod	Top 10mm Dia Rod		Keep	Shootbolt Guide
		Overall Size	Rod Part No.		
ACPD844 	ACPD846 (1000mm)	1820 - 1923	ACPD846 (1000mm)	ACUL390 (2 Required)	ACUL242 (2 Required)
		1923 - 2173	ACPD847 (1250mm)		
		2174 - 2323	ACPD848 (1500mm)		
		2323 - 2423*	ACPD848 (1500mm)		

*For doors above 2423mm, use ACPD849 (2000mm)

Lift Lever Locking Options

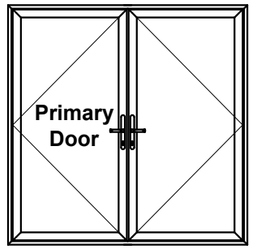

Double Handle Lift Lever Lock Option

Overall Sash Height	Primary Door Lift Lever		Secondary Door Lift Lever	Double Door Keep	Shootbolts	Shootbolt Extensions
	Left	Right				
980-2450*	ACUL277	ACUL278	ACUL276	ACUL279	ACDV737 ACDV738	ACDV742 ACDV744

*Any doors above 2450mm are above the tested limit.
**Please see page E17 for shootbolt layout.

Keep Handing Guide

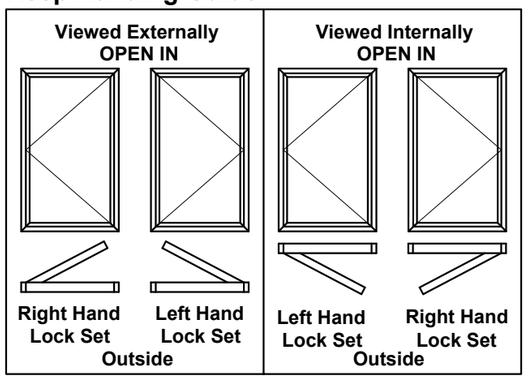

Do Not Scale From This Drawing

Single Door Lock Preparation

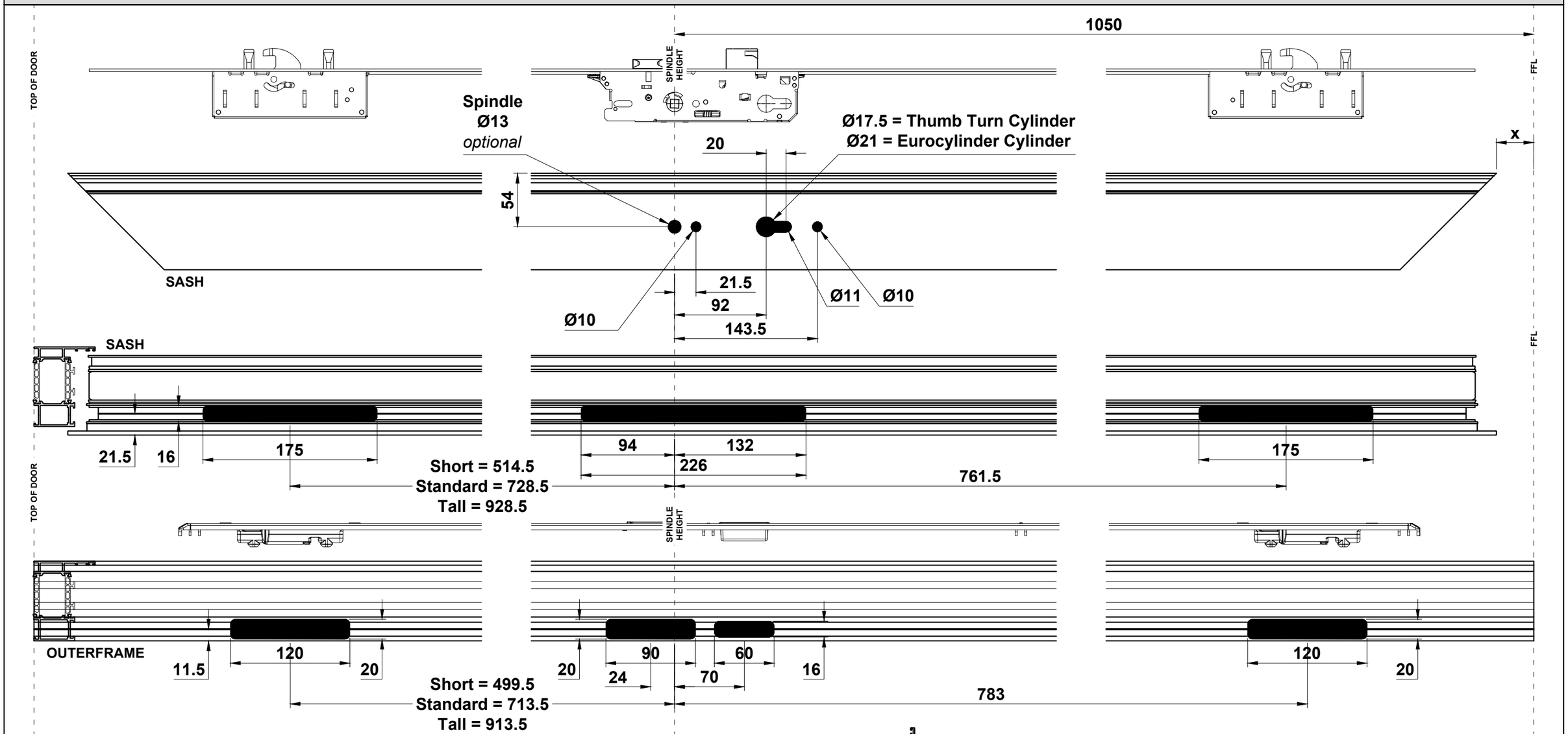

	Slam Lock		Key Wind		Lift Lever	
	LH	RH	LH	RH	LH	RH
Short	ACUL360	ACUL361	ACUL362	ACUL363	ACUL377	ACUL378
Standard	ACUL280	ACUL281	ACUL282	ACUL283	ACUL272	ACUL273
Tall	ACUL380	ACUL381	ACUL382	ACUL383	ACUL374	ACUL375

Important Note: All exposed aluminium should be coated using ACSIL014 or painted to match the frame.

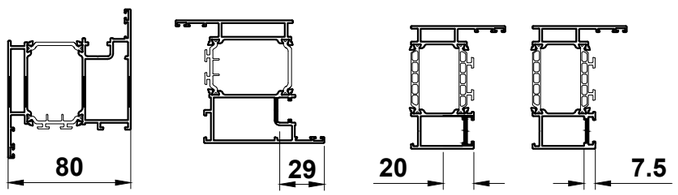

Profile	x
UL210	34
UL290	11.5
UL295	21

Do Not Scale From This Drawing

Double Door Lift Lever Shootbolt Layout

Note: ACDV742 & ACDV744 extensions may used with all locks

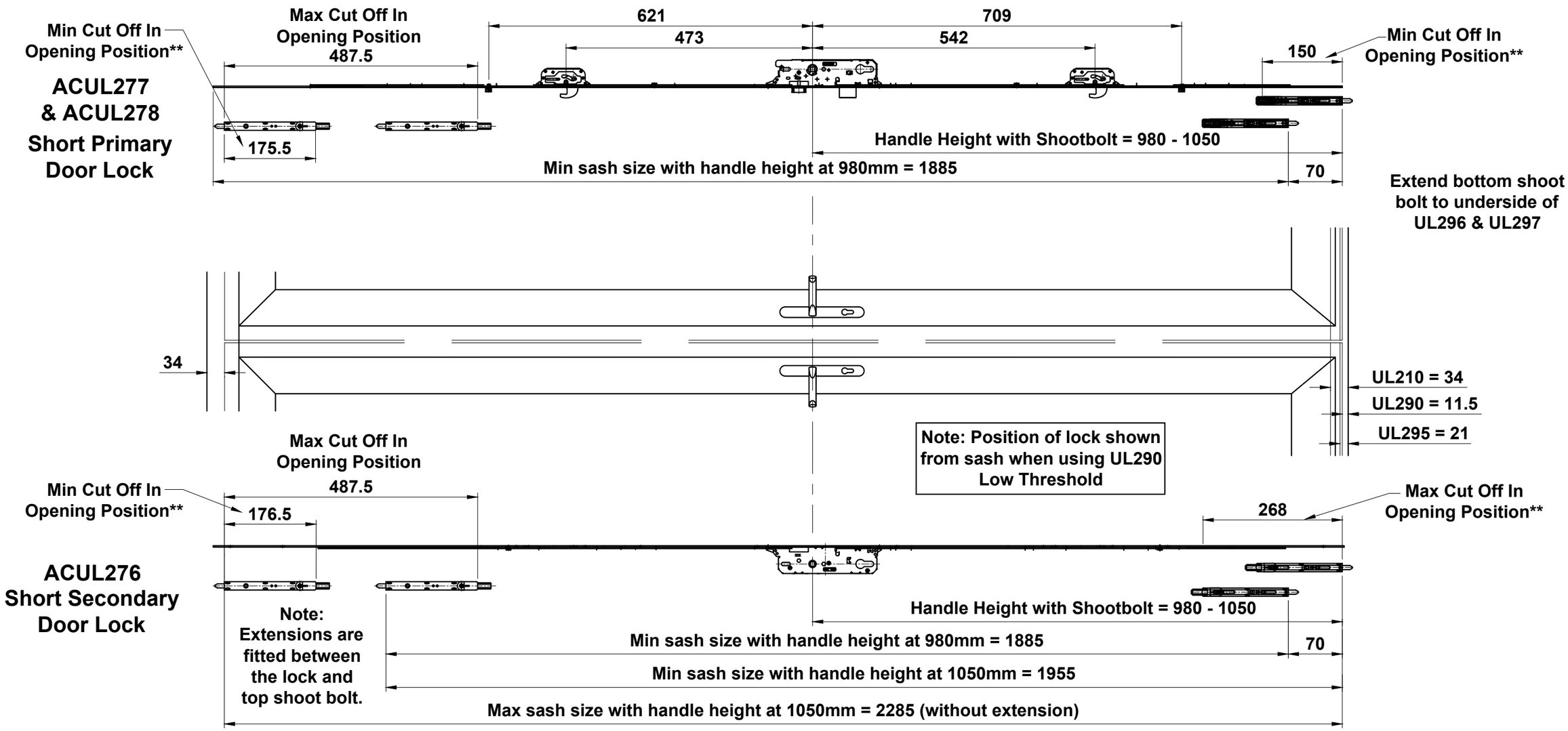

*Maximum sash height is 2500mm. Sizes shown here only indicate sizes with ACDV744.
**Minimum cut off positions are required to fit the shoot bolts.

Do Not Scale From This Drawing

Double Door Lift Lever Lock Preparation

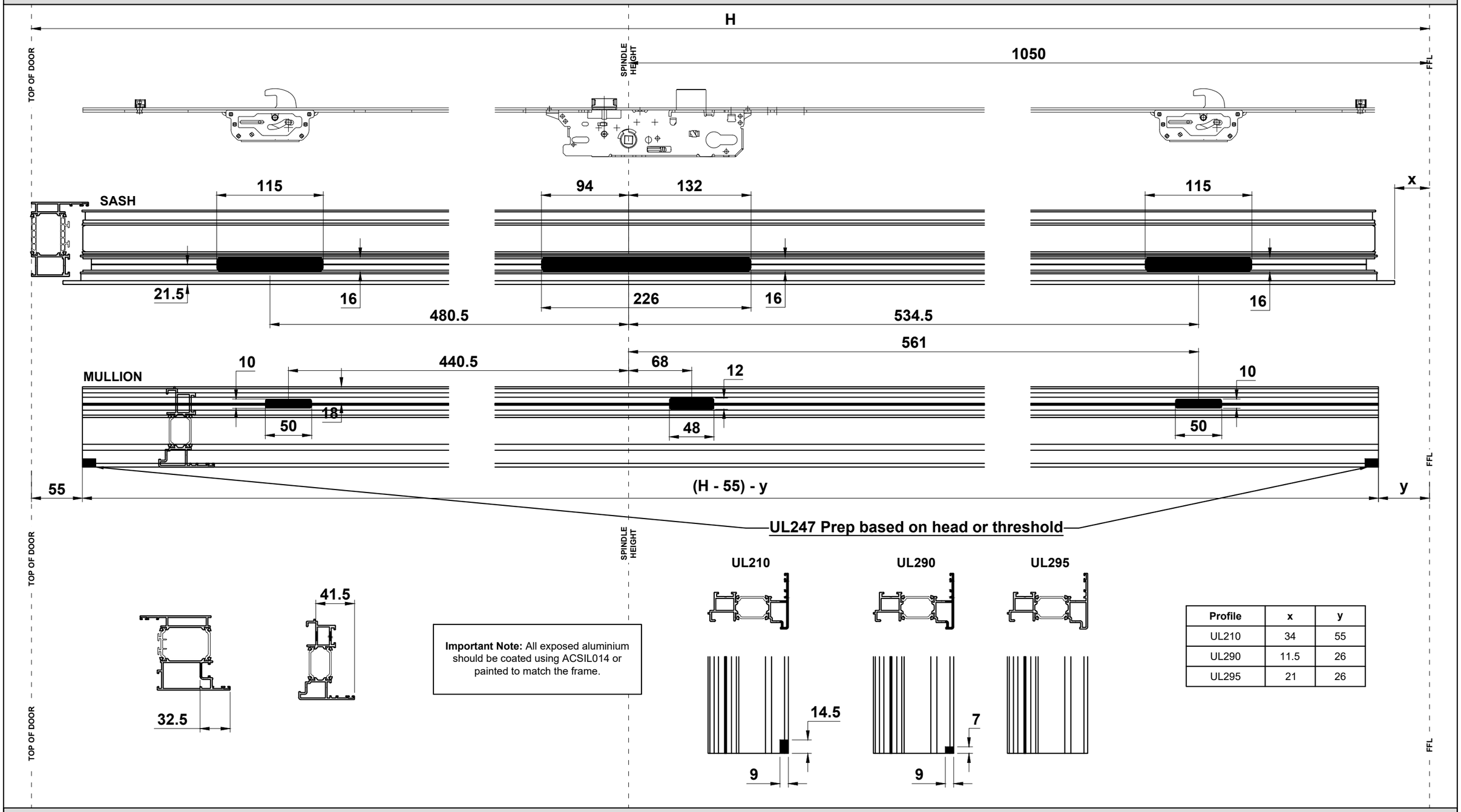

Important Note: All exposed aluminium should be coated using ACSIL014 or painted to match the frame.

Profile	x	y
UL210	34	55
UL290	11.5	26
UL295	21	26

Do Not Scale From This Drawing

Double Door Lift Lever Meeting Stile Assembly - Full Frame

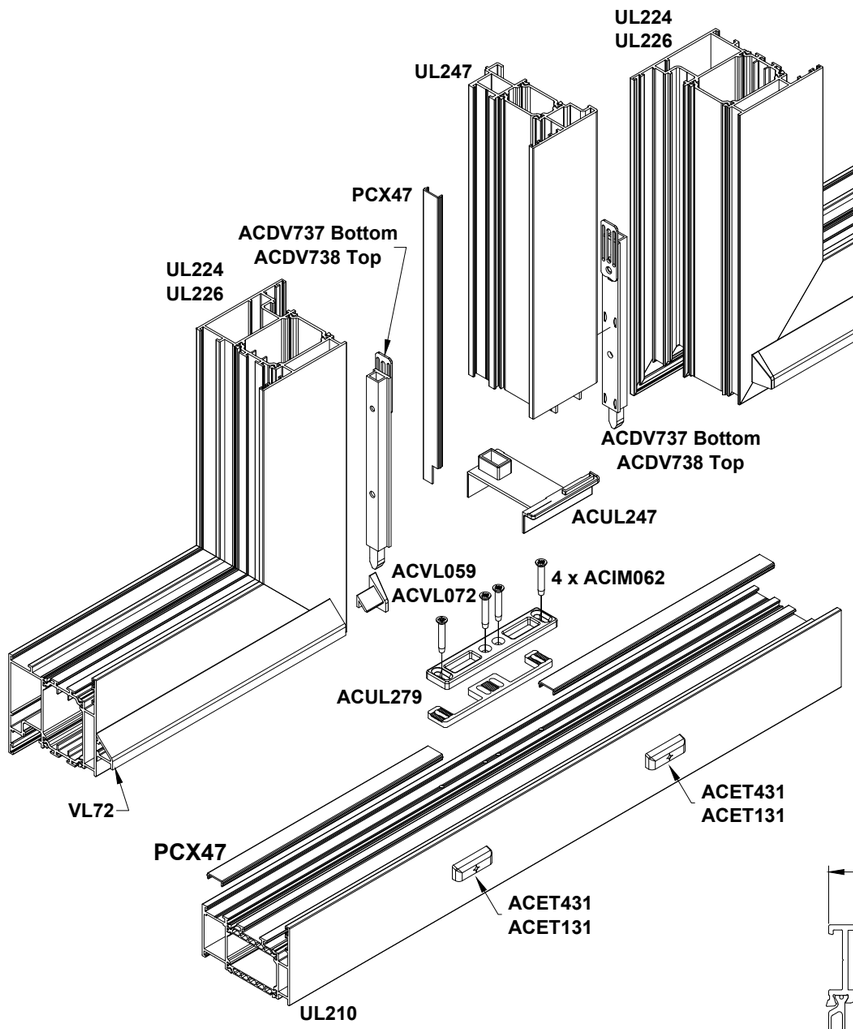

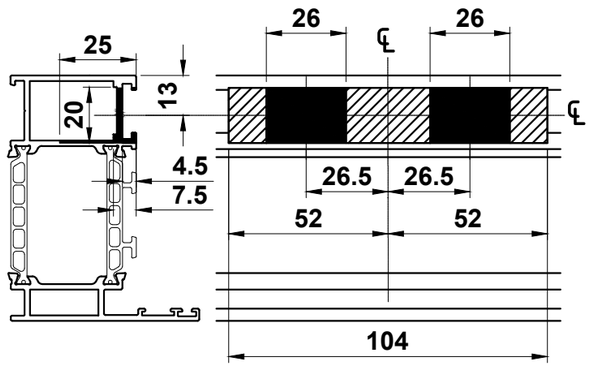

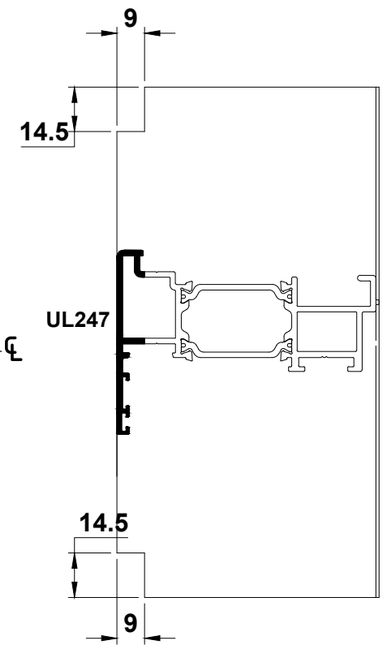

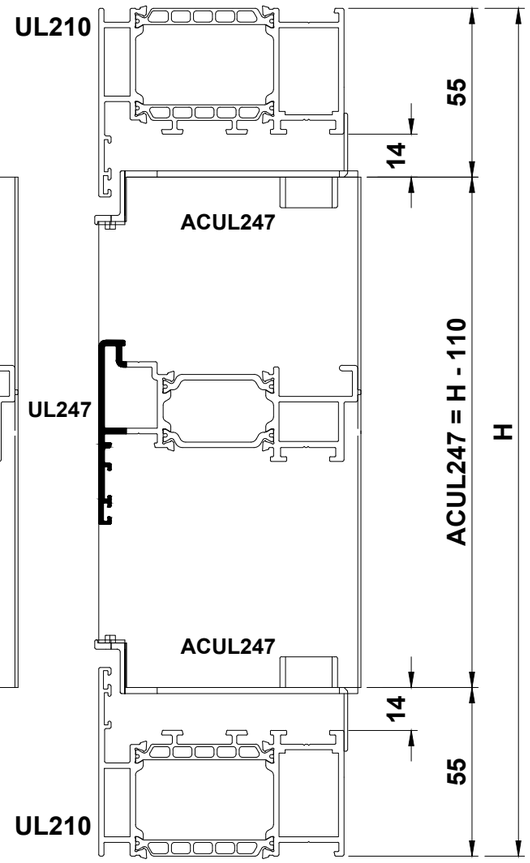

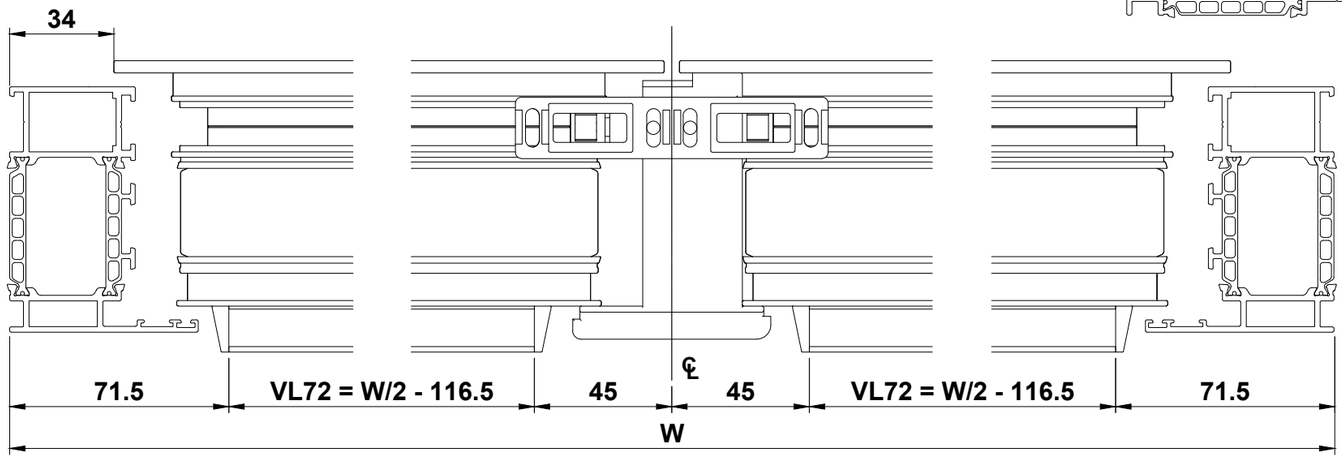

Note: All routing on outer frame require sealant to stop water leakage

Do Not Scale From This Drawing

Double Door Lift Lever Meeting Stile Assembly - Low Rebate Threshold

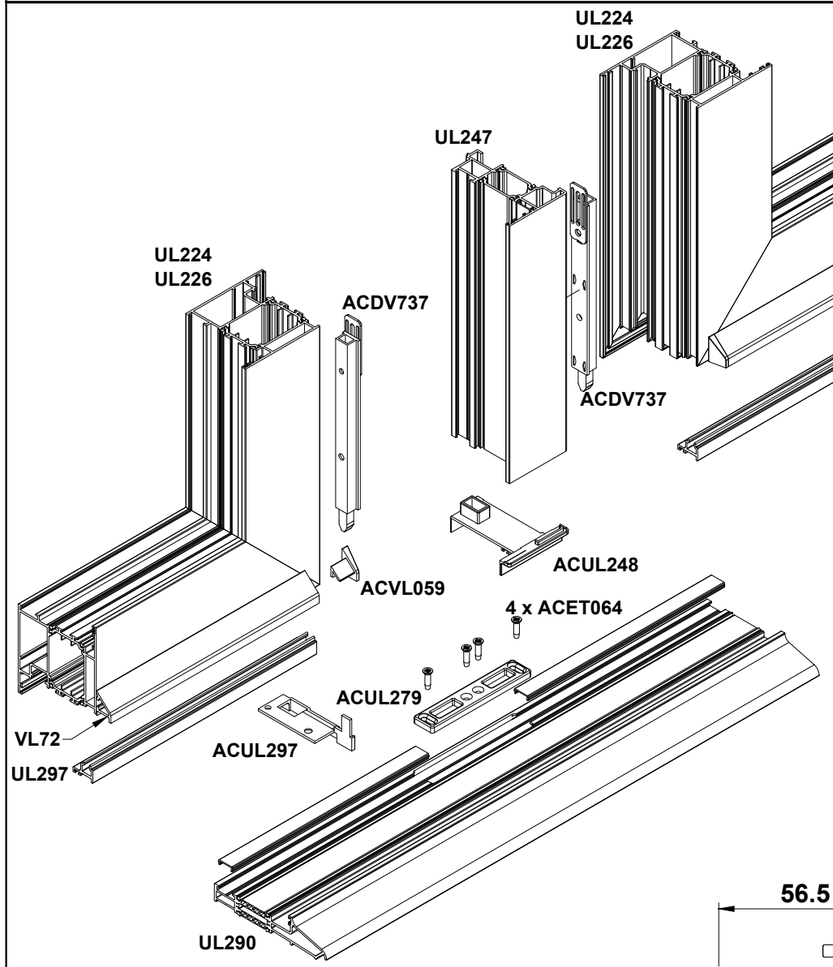

Note: All routing on low threshold to require sealant to stop water leakage

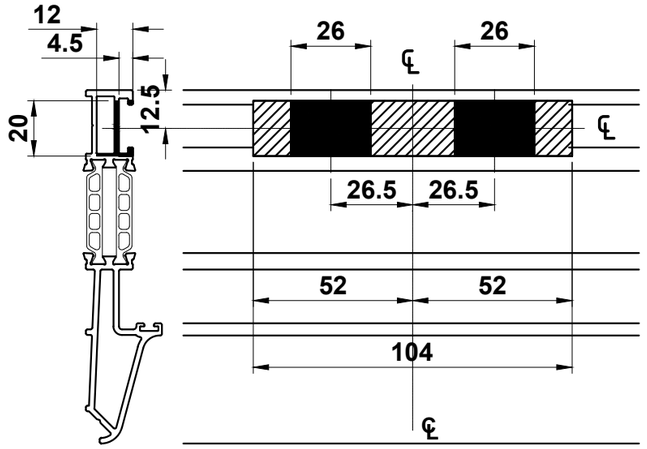

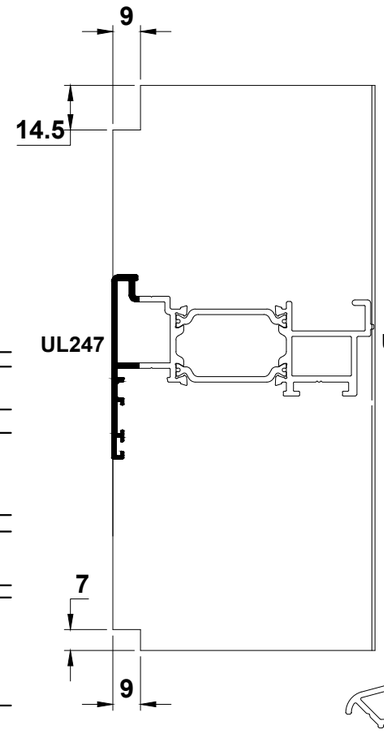

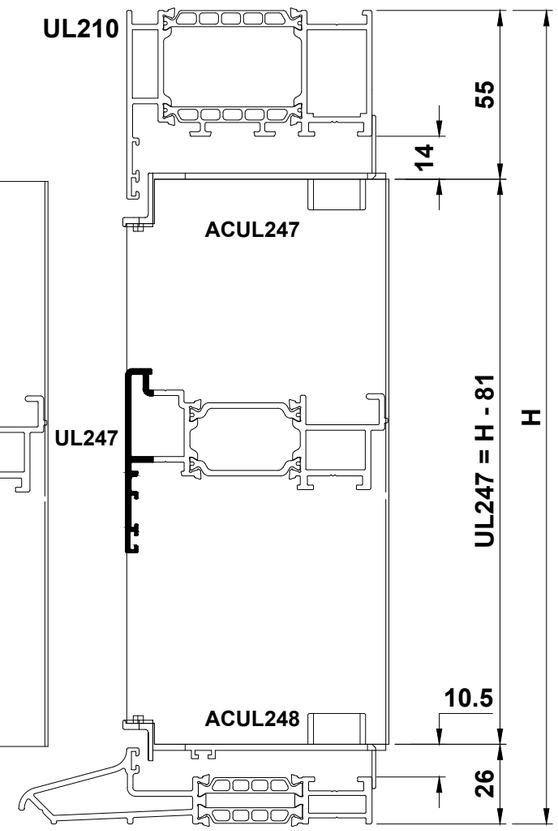

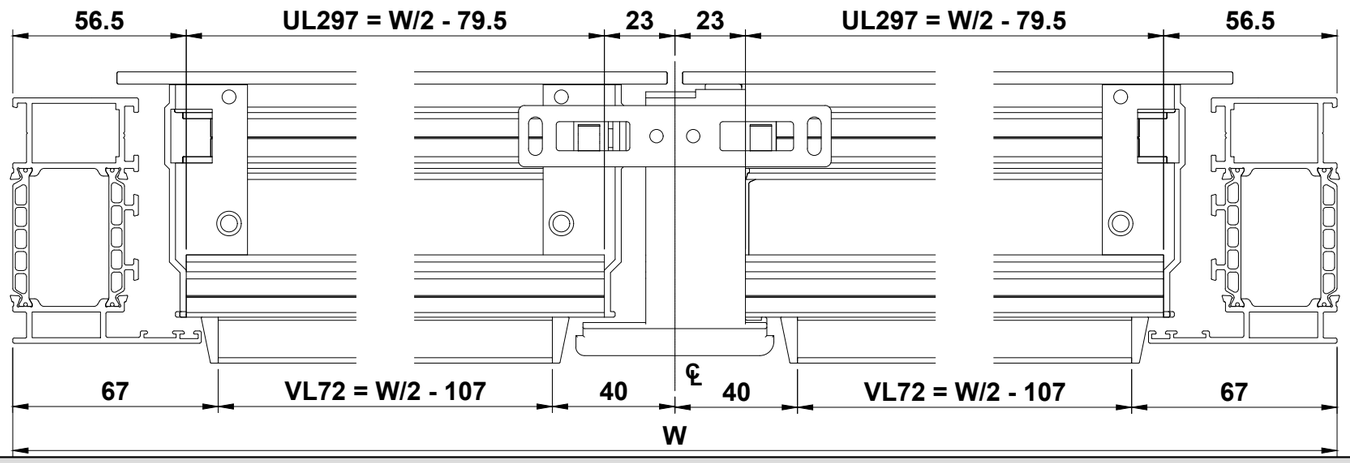

Do Not Scale From This Drawing

Double Door Lift Lever Lock Preparation - Low Ramp Threshold

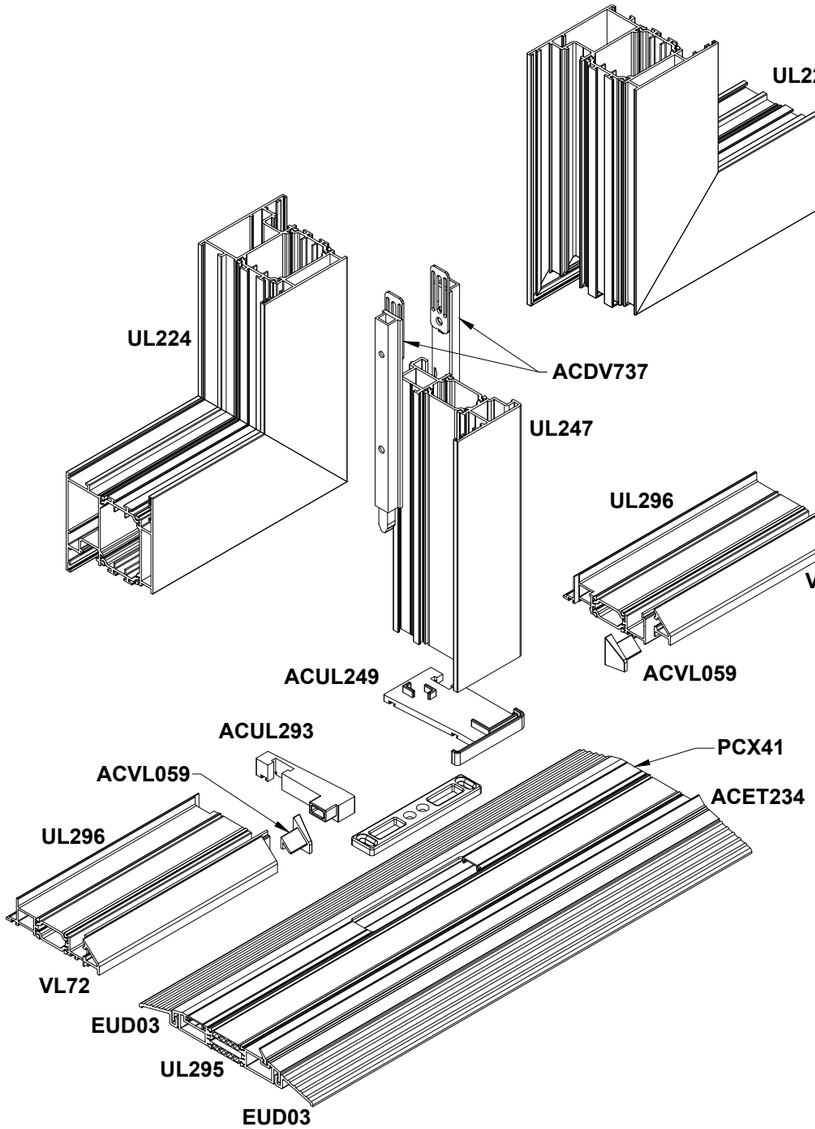

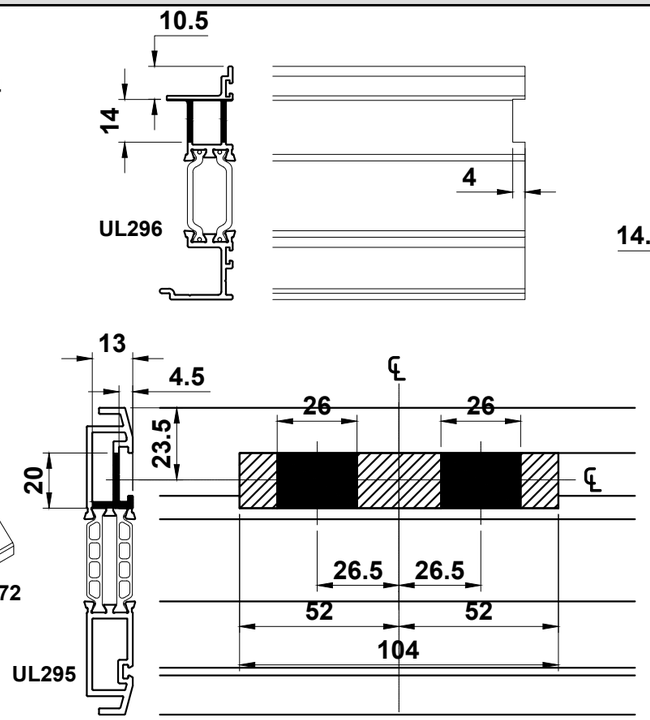

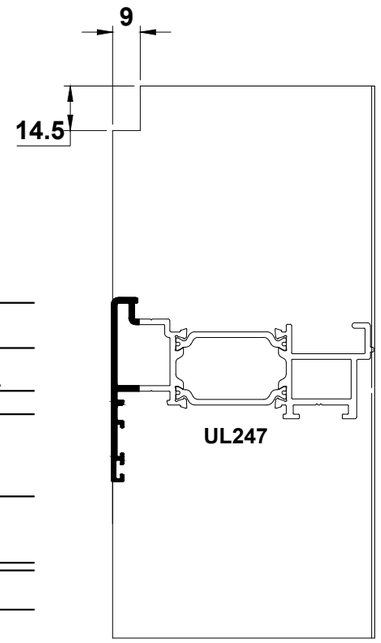

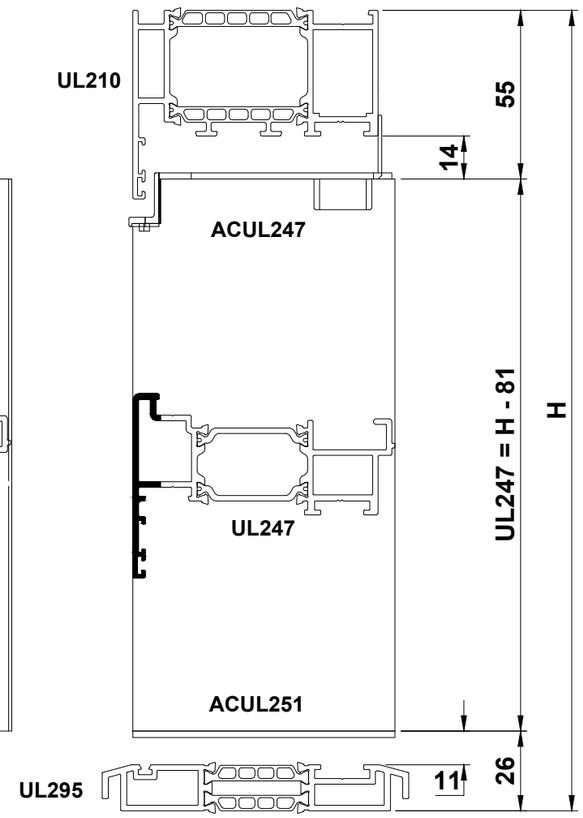

Note: All routing on low threshold require sealant to stop water leakage

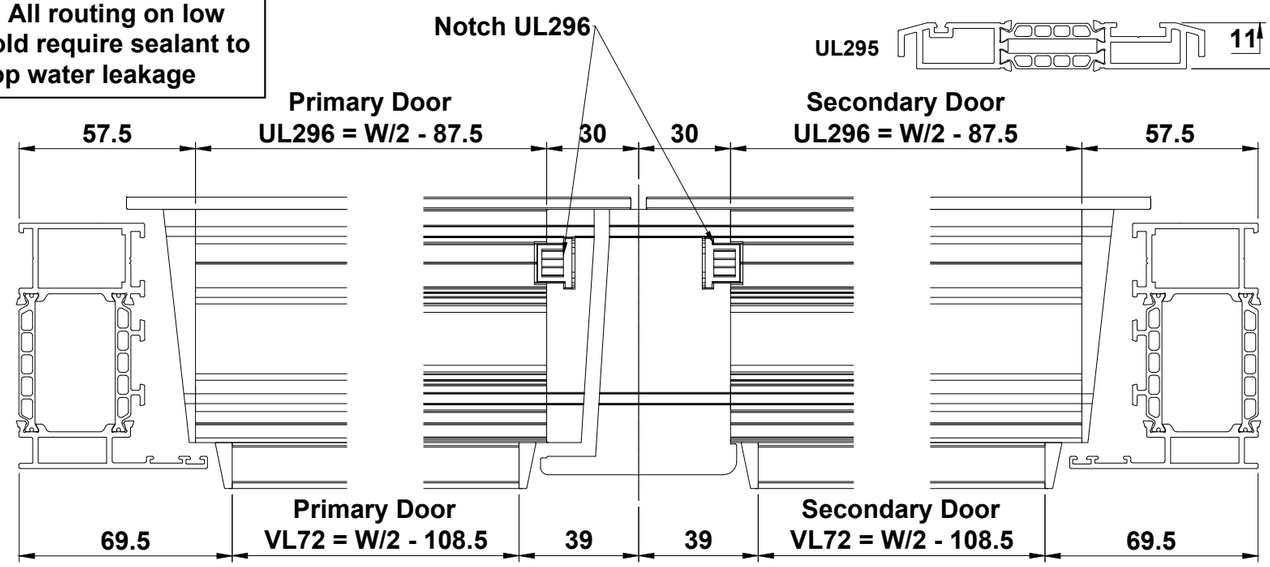

Double Door Finger Bolt Lock Preparation

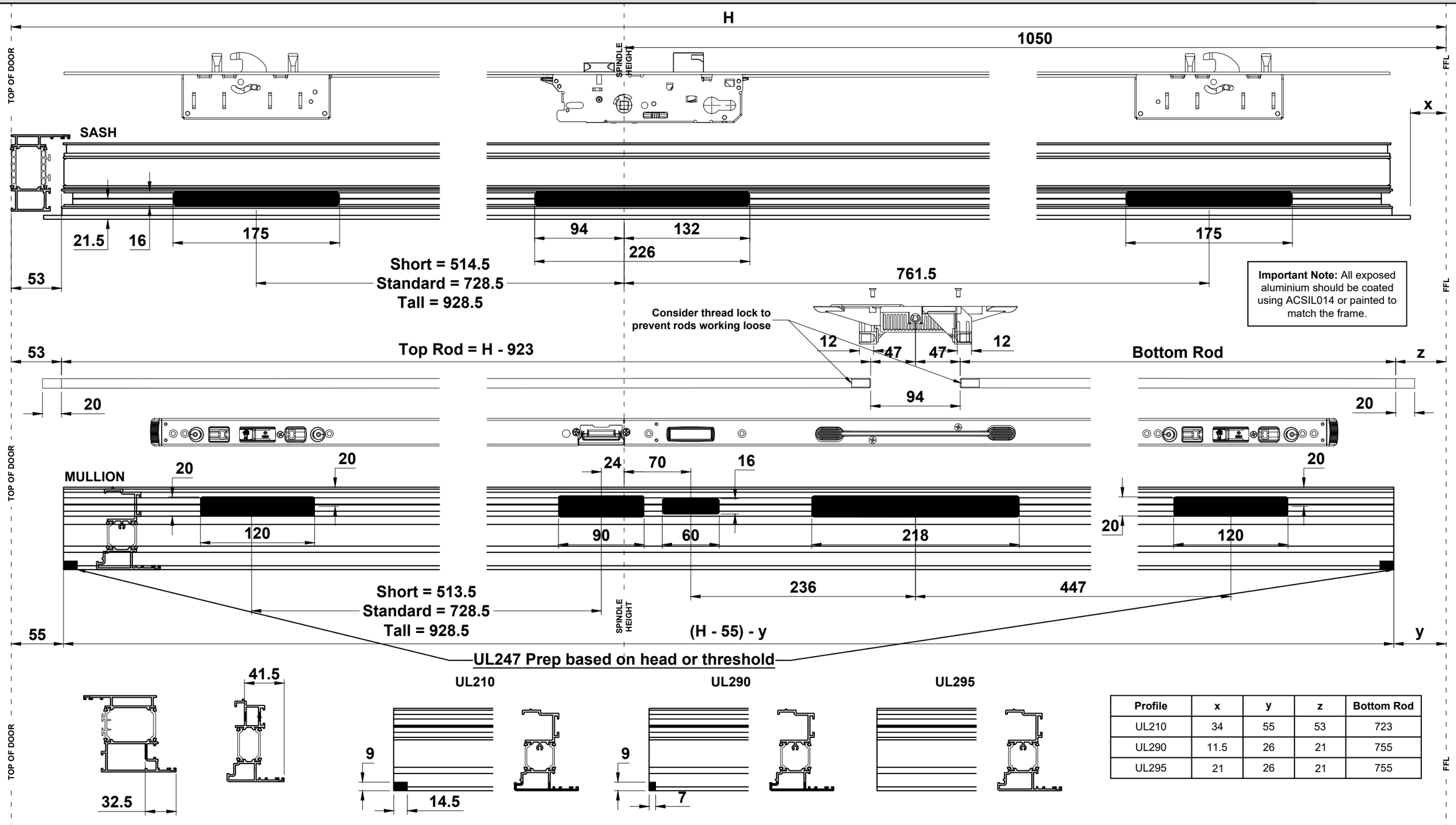

Profile	x	y	z	Bottom Rod
UL210	34	55	53	723
UL290	11.5	26	21	755
UL295	21	26	21	755

Do Not Scale From This Drawing

Double Door Finger Bolt Meeting Stile Assembly - Full Frame

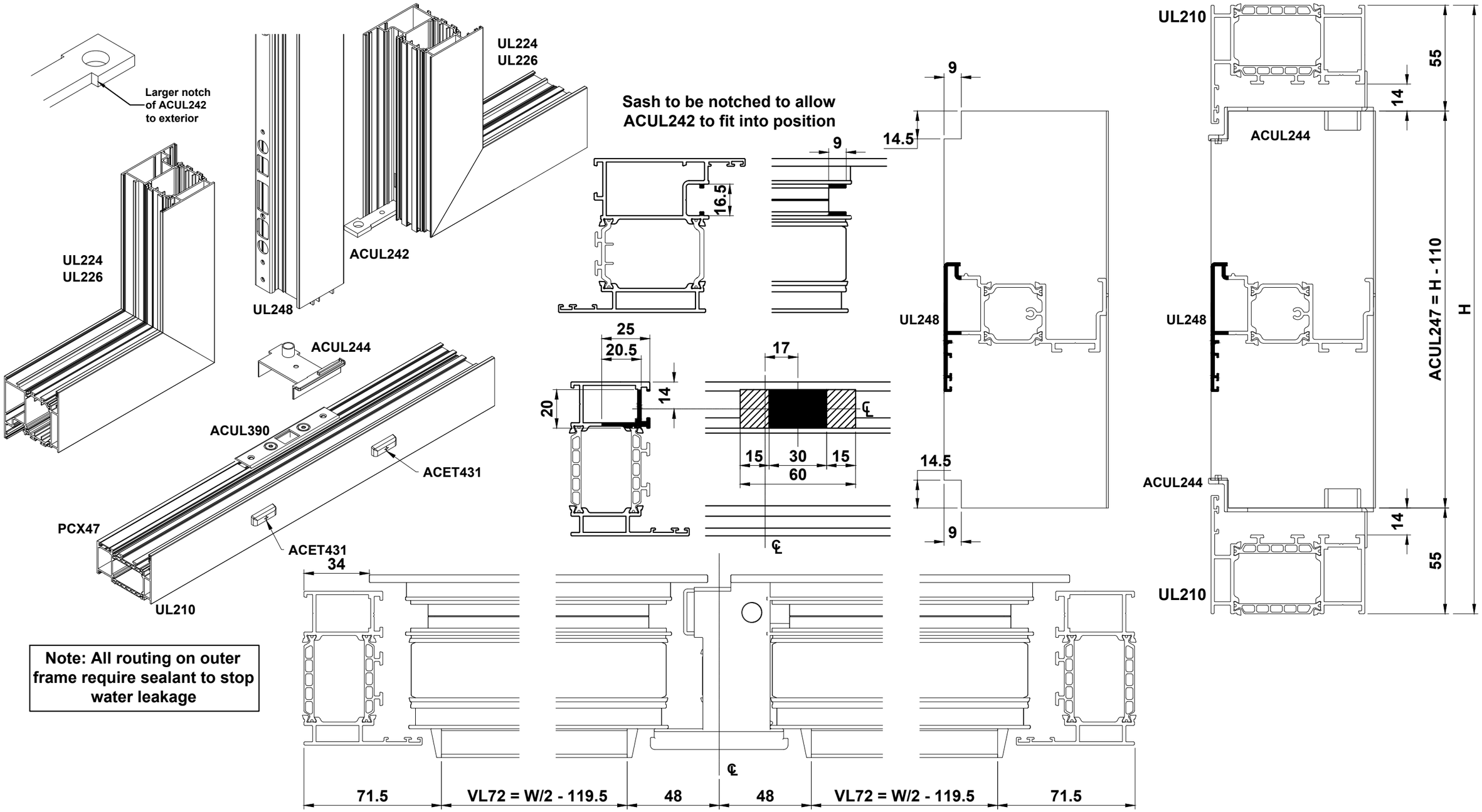

Note: All routing on outer frame require sealant to stop water leakage

Double Door Finger Bolt Meeting Stile Assembly - Low Rebate Threshold

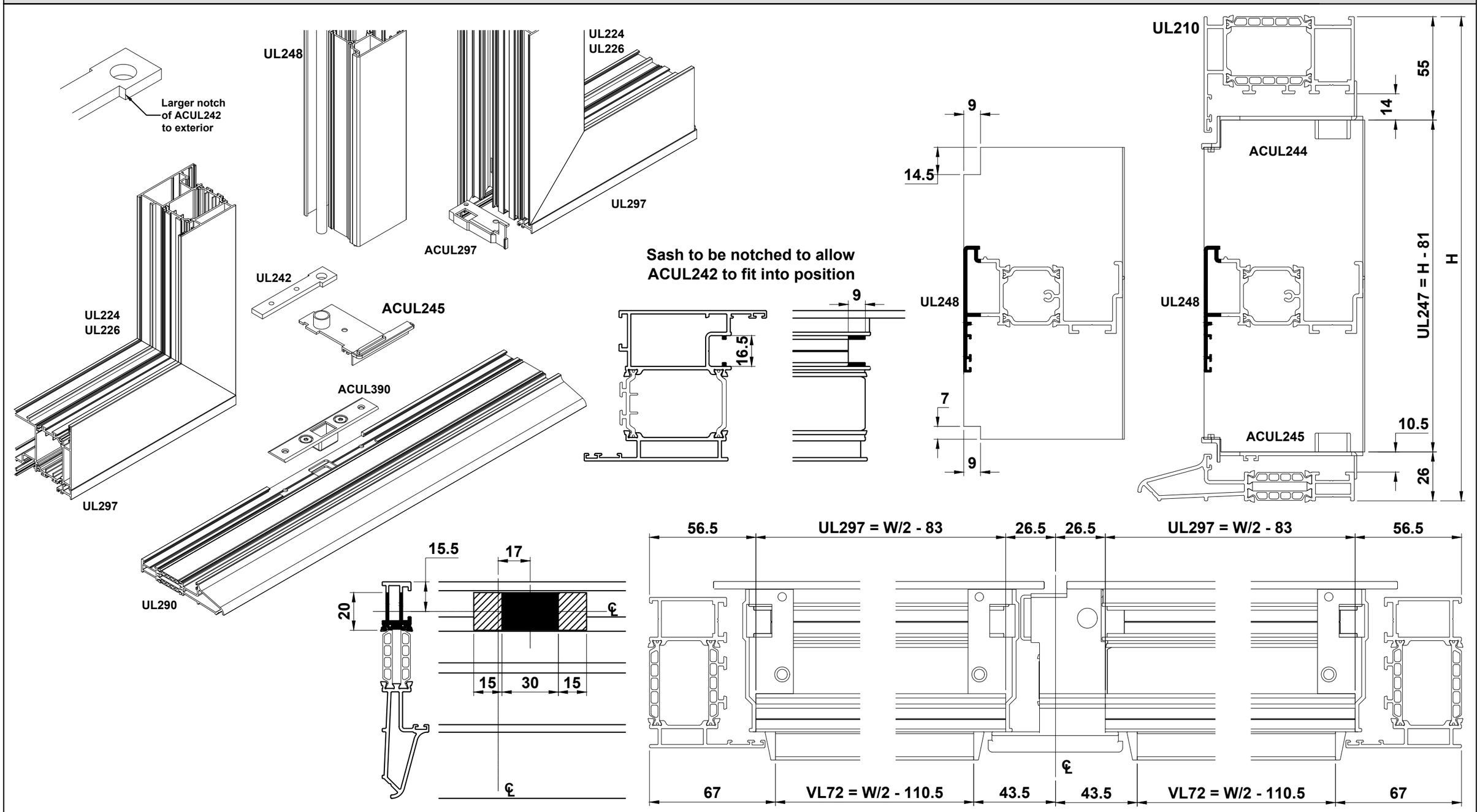

Do Not Scale From This Drawing

Double Door Meeting Stile Assembly - Low Ramp Threshold

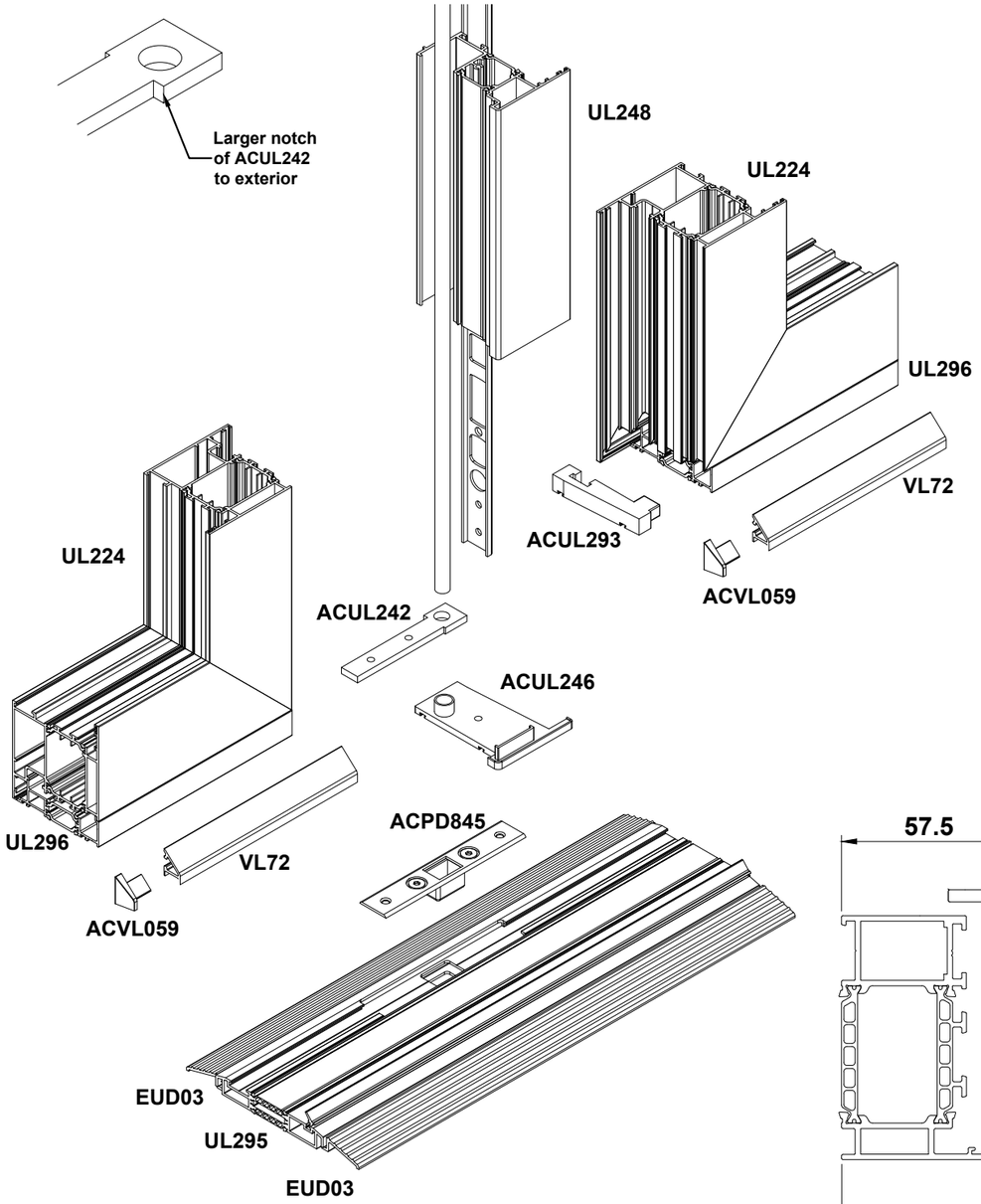

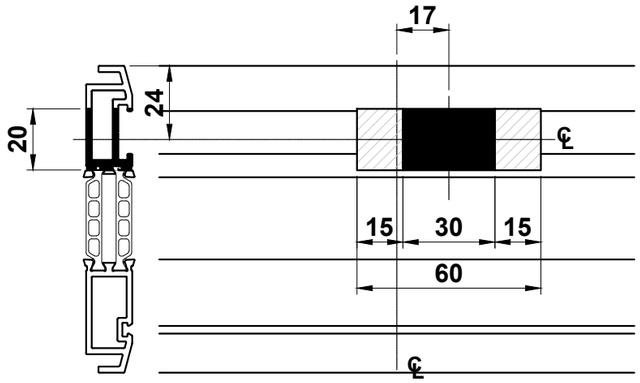

Sash to be notched to allow
ACUL242 to fit into position

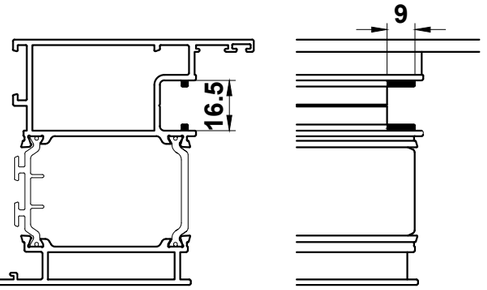

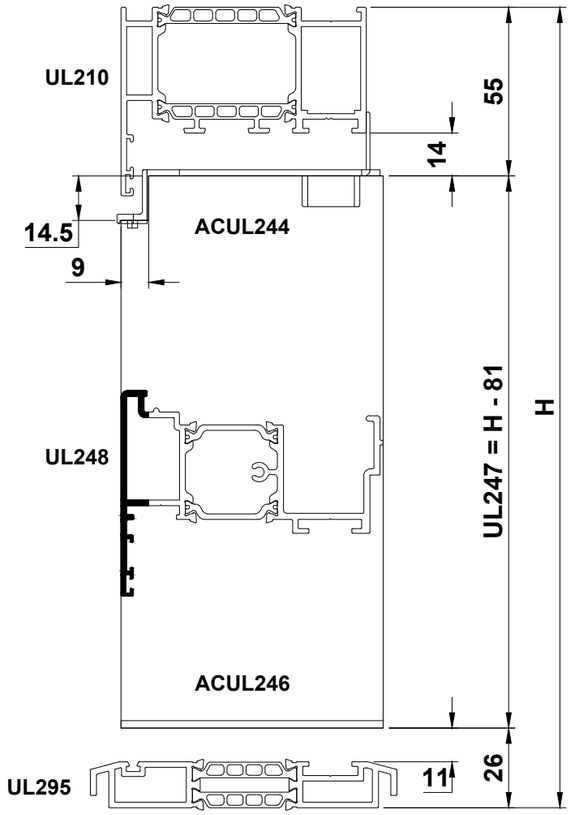

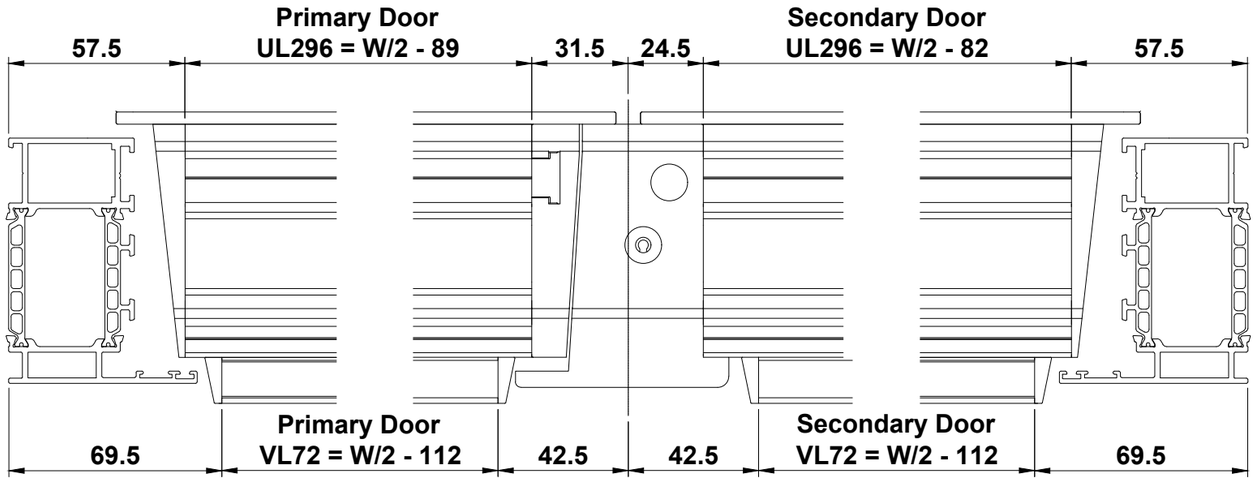

Glazing Chart

UL210

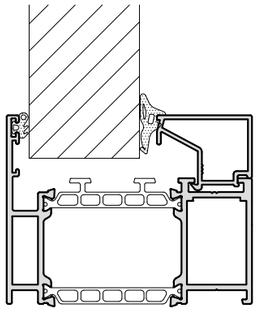

Glazing Chart: UL210			
Glass Thickness	External Gasket	Internal Gasket	Bead
36	ACVG31N	ACUN036	UL078

UL204
UL224
UL230

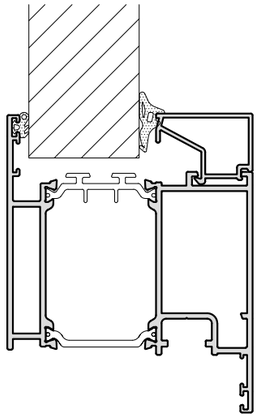

Glazing Chart: UL204 UL224 UL230			
Glass Thickness	External Gasket	Internal Gasket	Bead
24	ACVG31N	ACUN033	UL063
28	ACVG31N	ACUN033	UL064
32	ACVG31N	ACUN033	UL065
36	ACVG31N	ACUN036	UL066
40	ACVG31N	ACUN036	UL067

UL206
UL226
UL231

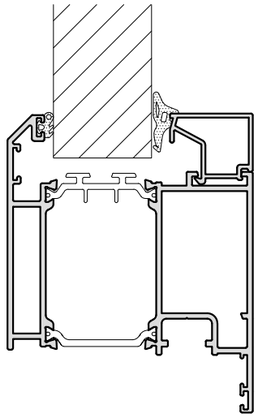

Glazing Chart: UL206 UL226 UL231			
Glass Thickness	External Gasket	Internal Gasket	Bead
24	ACVG31N	ACUN033	UL065
28	ACVG31N	ACUN036	UL066
32	ACVG31N	ACUN036	UL067
36	ACVG31N	ACUN036	UL068
40	ACVG31N	ACUN036	UL069

UL232

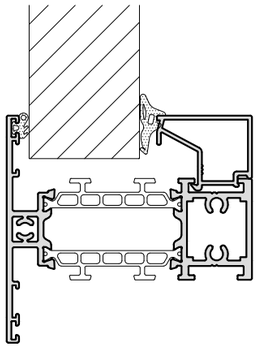

Glazing Chart: UL232			
Glass Thickness	External Gasket	Internal Gasket	Bead
36	ACVG31N	ACUN036	UL078

Do Not Scale From This Drawing

Panel Door Details

We offer a range of designs in panel doors from traditional Victorian, Georgian and Edwardian designs to contemporary chic. Here are just a select few we can offer:

PM002P

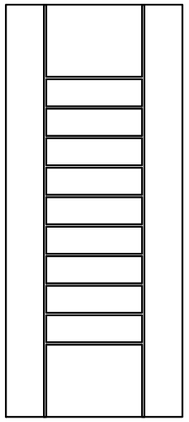

PM009T

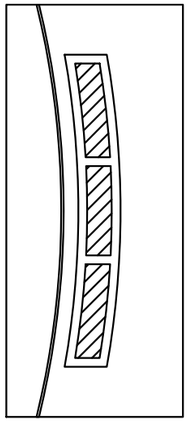

PM003P

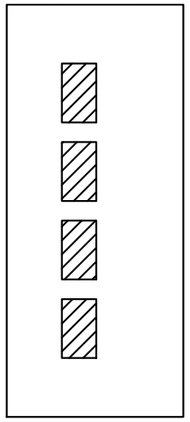

PM0015P

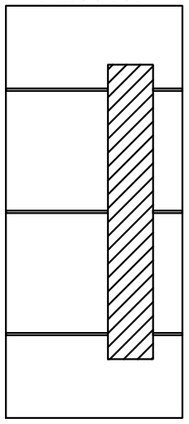

PM0017P

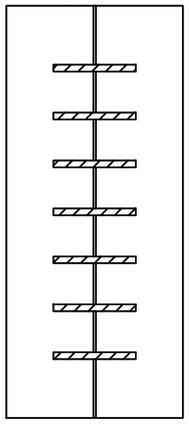

PM001P

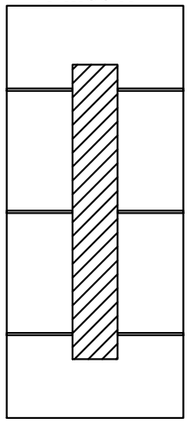

For more information and panel designs please visit our website, www.smartsystems.co.uk or call our sales team on 01934 876100.

An overall U-value of 1.2 W/m²K may be achieved by specifying glaze-in panels. Below are the centre pane U-values and overall U-values of the examples shown:

40mm Panel Thickness

Panel Number	CP U-Value (W/m2K)	Door U-Value (W/m2K)
PM002P	0.8	1.1
PM009T	0.9	1.2
PM003P	0.9	1.2
PM0015P	0.9	1.2
PM0017P	0.9	1.2
PM001P	0.9	1.2

32mm Panel Thickness

Panel Number	CP U-Value (W/m2K)	Door U-Value (W/m2K)
PM002P	1.0	1.3
PM009T	1.1	1.3
PM003P	1.1	1.3
PM0015P	1.1	1.3
PM0017P	1.1	1.3
PM001P	1.1	1.3

28mm Panel Thickness

Panel Number	CP U-Value (W/m2K)	Door U-Value (W/m2K)
PM002P	1.1	1.3
PM009T	1.2	1.4
PM003P	1.2	1.4
PM0015P	1.2	1.4
PM0017P	1.2	1.4
PM001P	1.2	1.4

Letter Plate Fitting

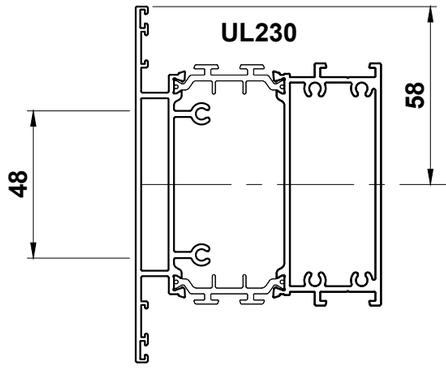

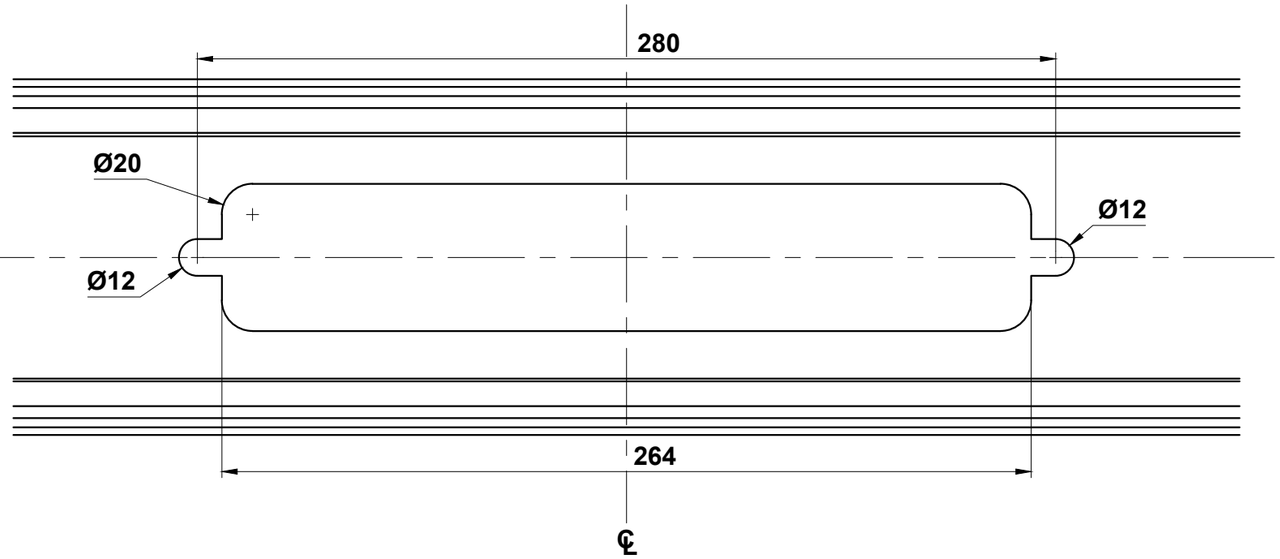

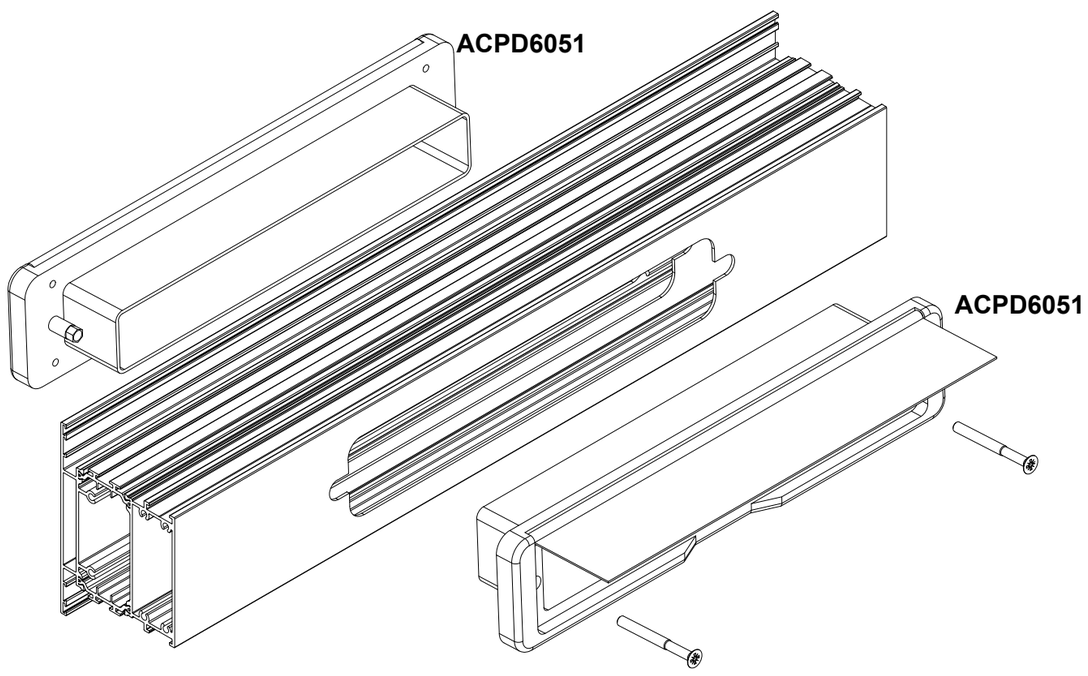

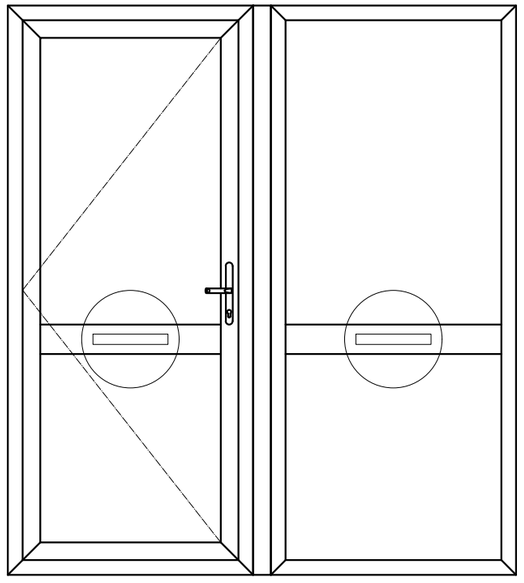

Do Not Scale From This Drawing

Fixing Strap Detail

Note:
Fixing straps should be spaced a minimum of 150mm in from each end & at a maximum of 300mm apart.

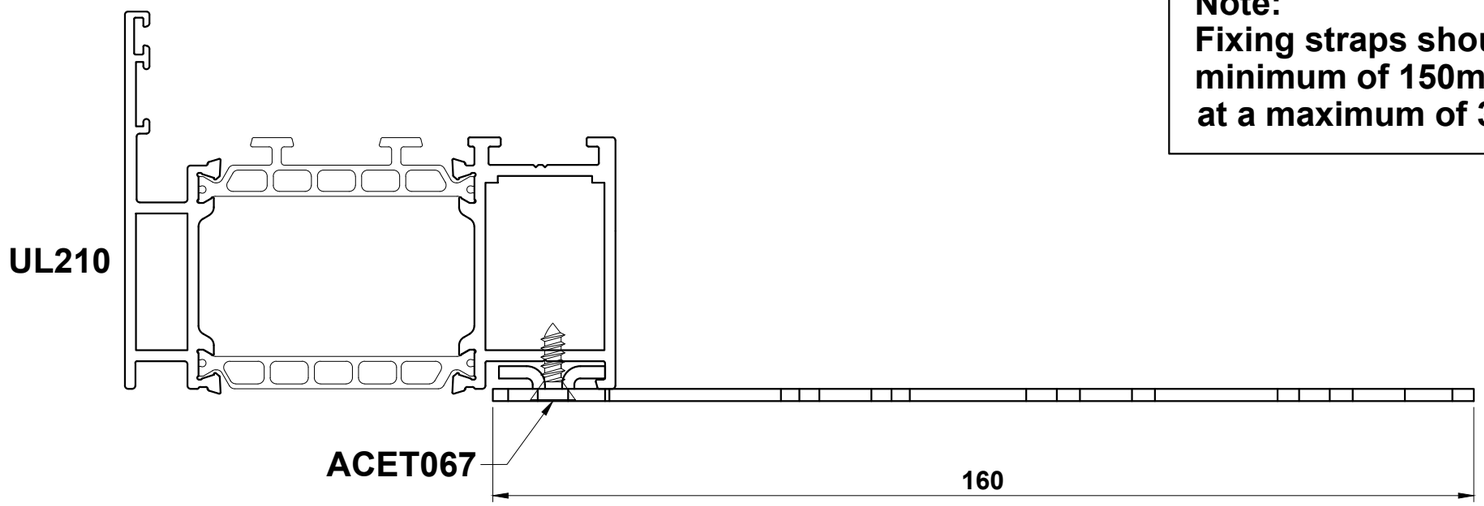

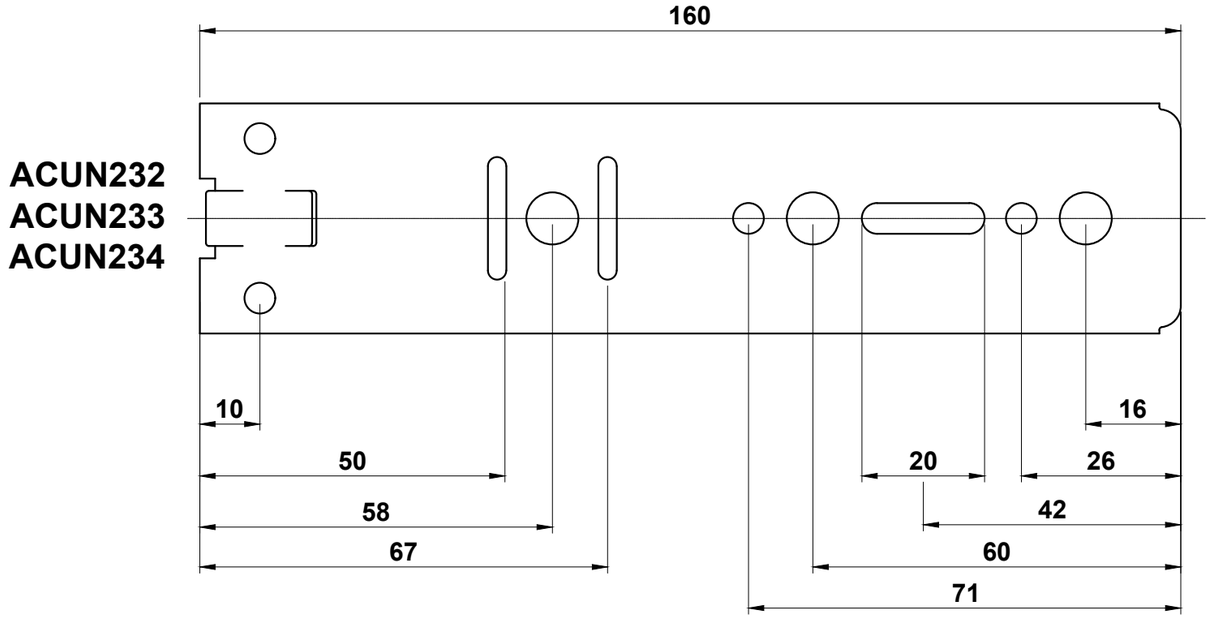

Do Not Scale From This Drawing

Example Layout

AA

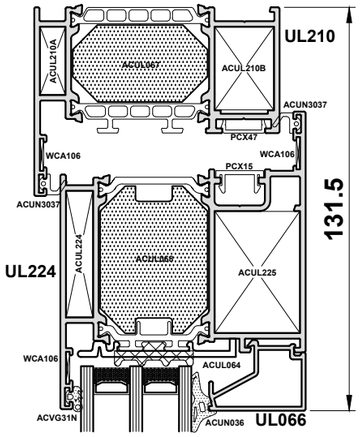

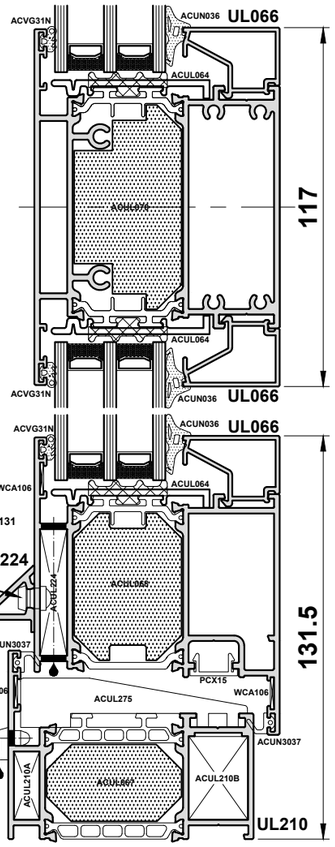

CC

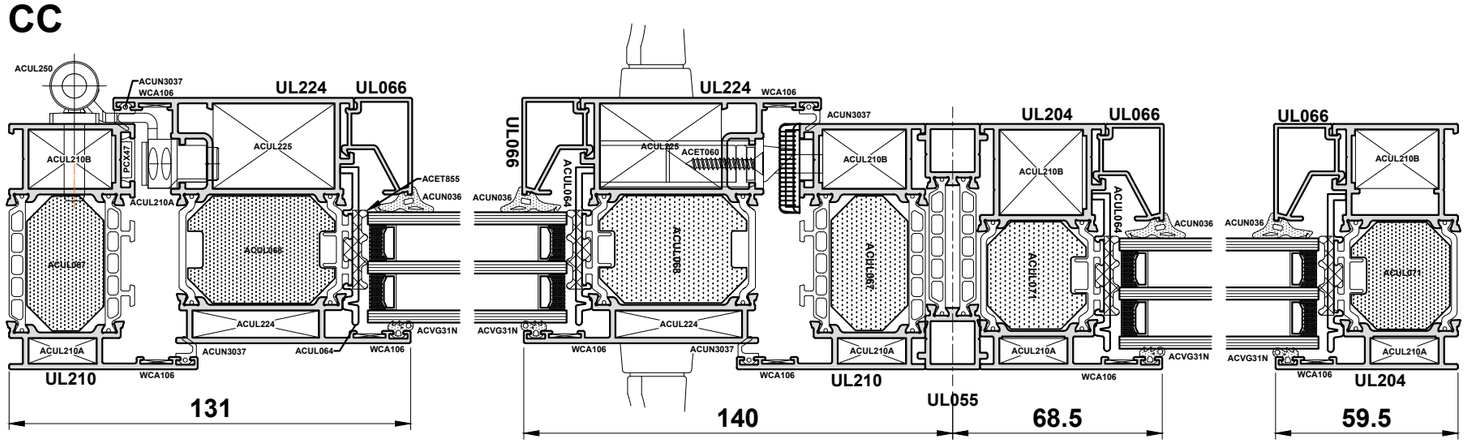

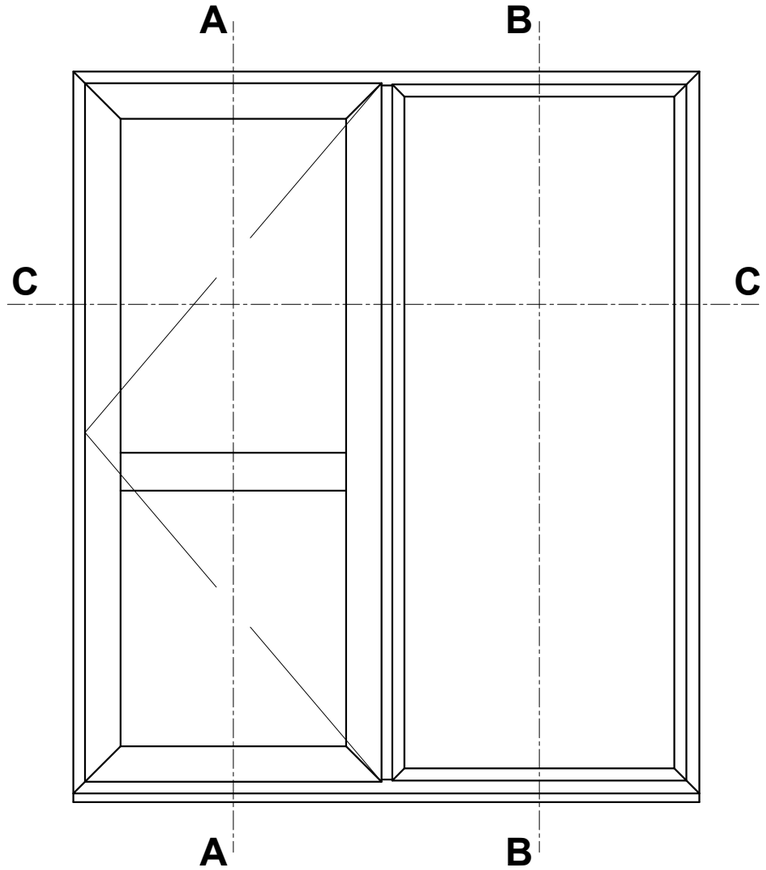

BB

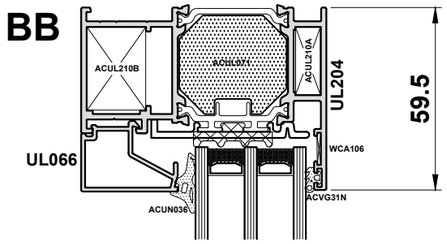

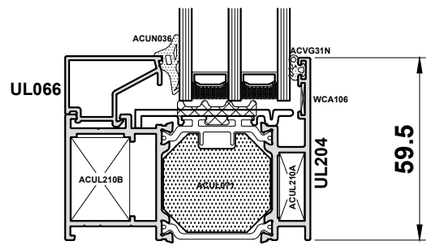

Do Not Scale From This Drawing

Section E

E UL

Construction Drawings - Open Out

General

Do Not Scale From This Drawing

Do Not Scale From This Drawing

Corner Joint Details

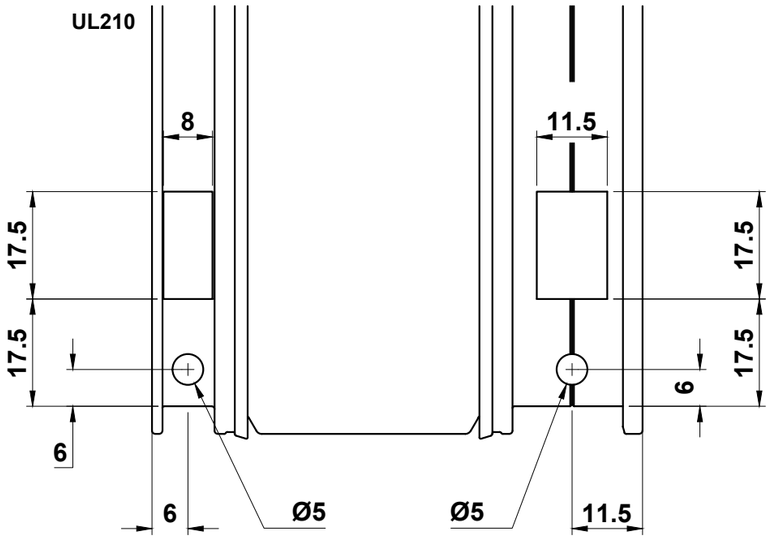

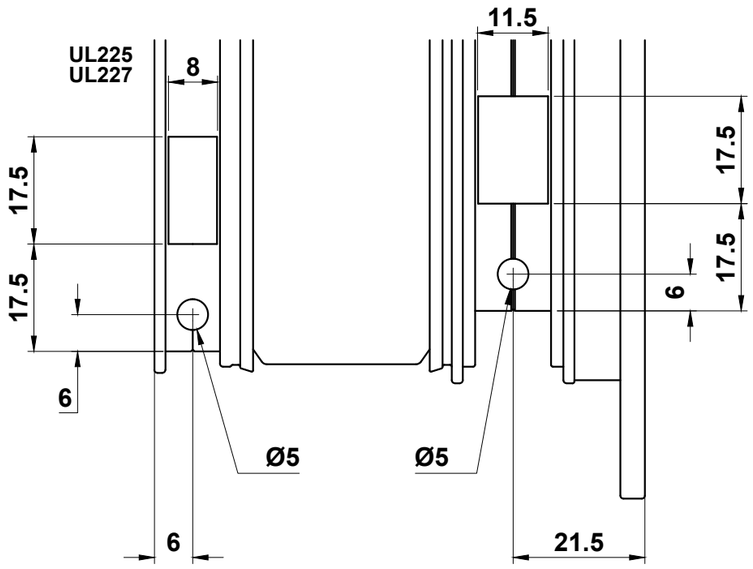

ACUL900
Punch tool

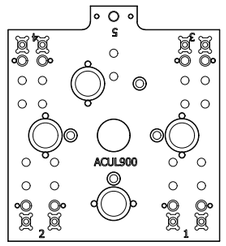

Notes

1. Degrease mitre sections
2. Cover mitred faces with ACSIL04
3. Apply ACSIL013 to cleat chambers
4. Apply ACSIL04 to any fractures formed by crimping to make watertight

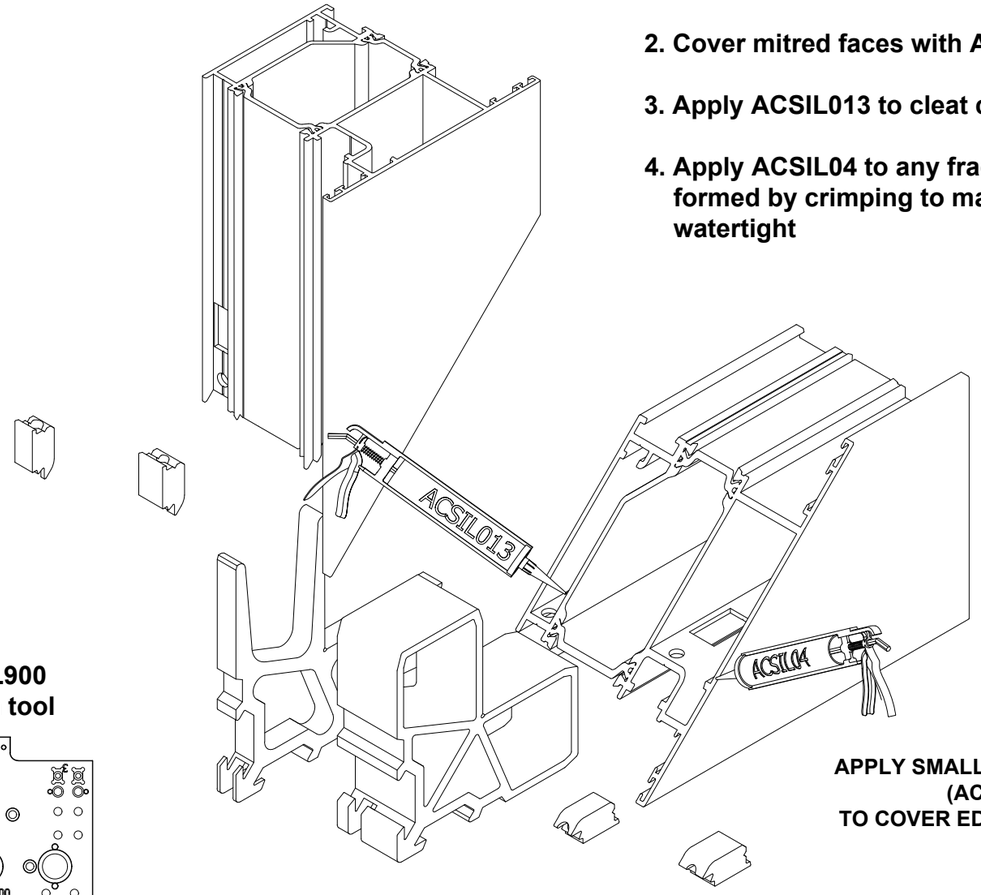

APPLY SMALL JOINT SEALANT
(ACSIL04)
TO COVER EDGE OF PROFILE.

APPLY CLEAT GLUE (ACSIL013)
TO ALL CLEAT CHAMBERS

To ensure accurate corners, we recommend the use of support blocks (by others) whilst cutting.

Do Not Scale From This Drawing

ACUL900 Punch Tool

STATION 3 **STATION 4**

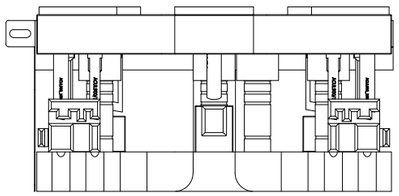

STATION 2 **STATION 1**

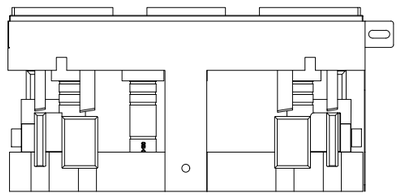

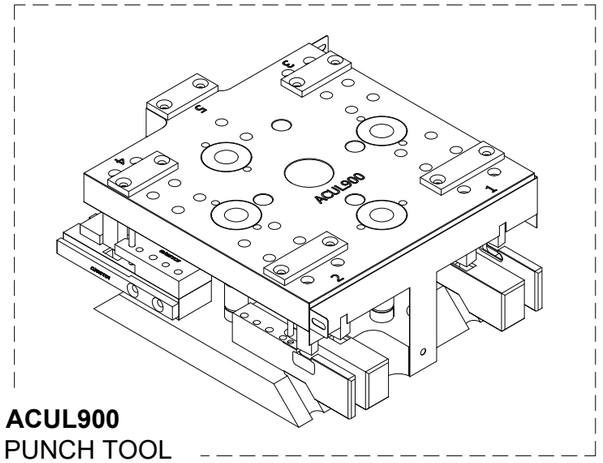

ACUL900
PUNCH TOOL

STATION 3 **STATION 4**

UL204

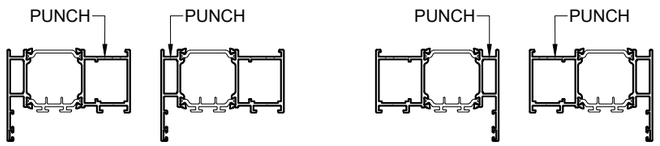

UL206

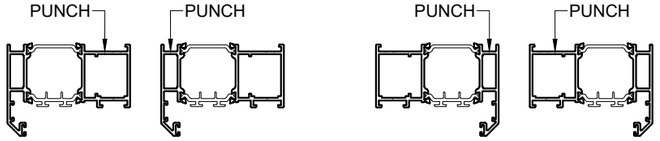

UL210

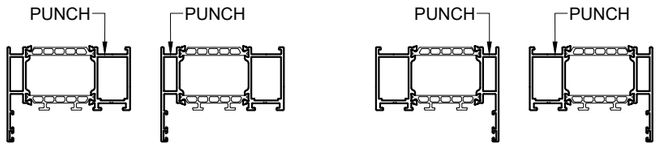

STATION 2 **STATION 1**

UL224

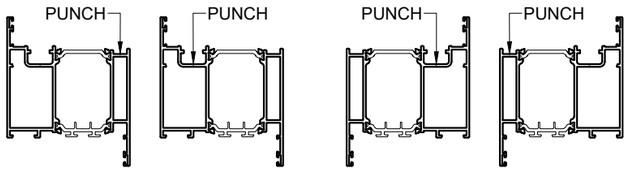

UL225

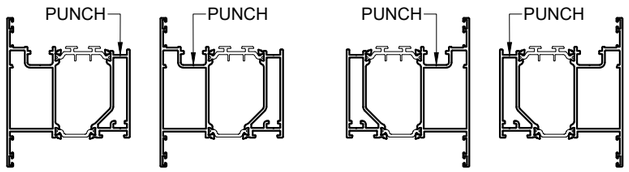

UL226

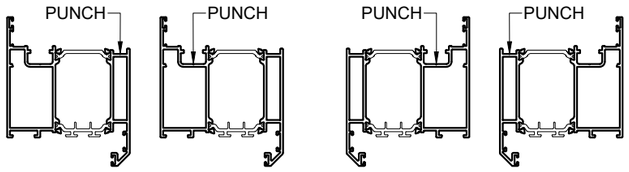

UL227

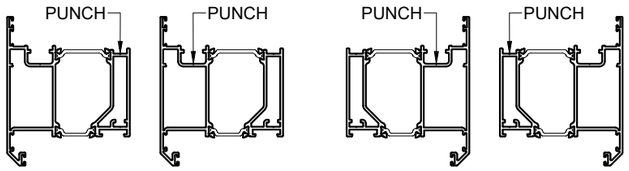

STATION 5

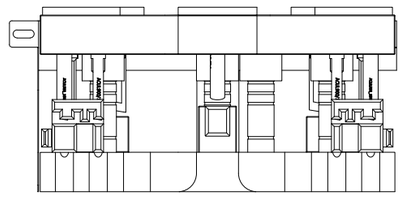

UL210

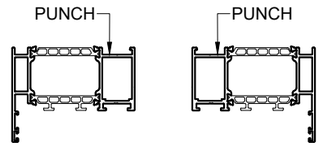

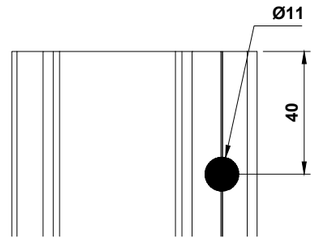

STATION 3 & 4 PREP

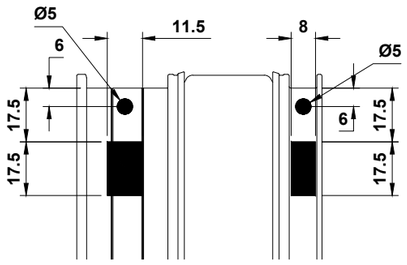

STATION 1 & 2 PREP

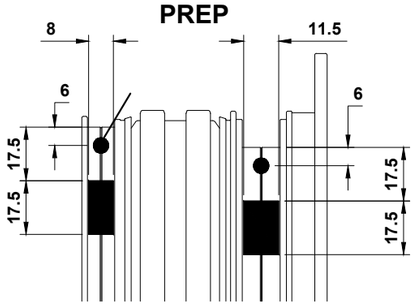

IMPORTANT NOTES:
Do not over-tighten punch tool fixing nut.
Longer profiles should be supported with stands.

Do Not Scale From This Drawing

Low Rebate Threshold Assembly

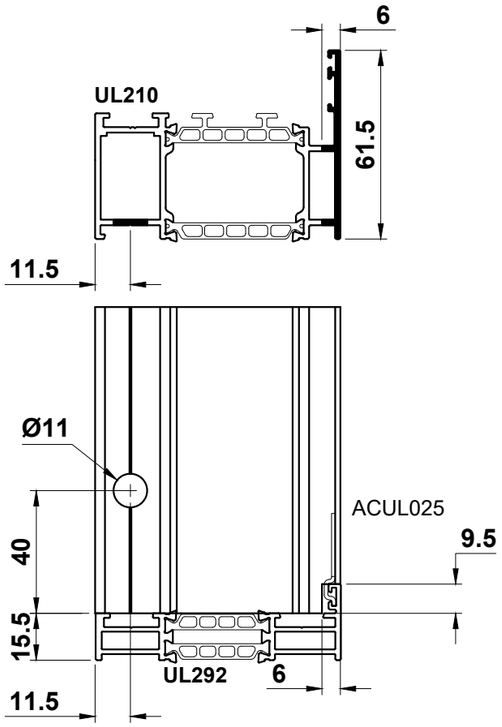

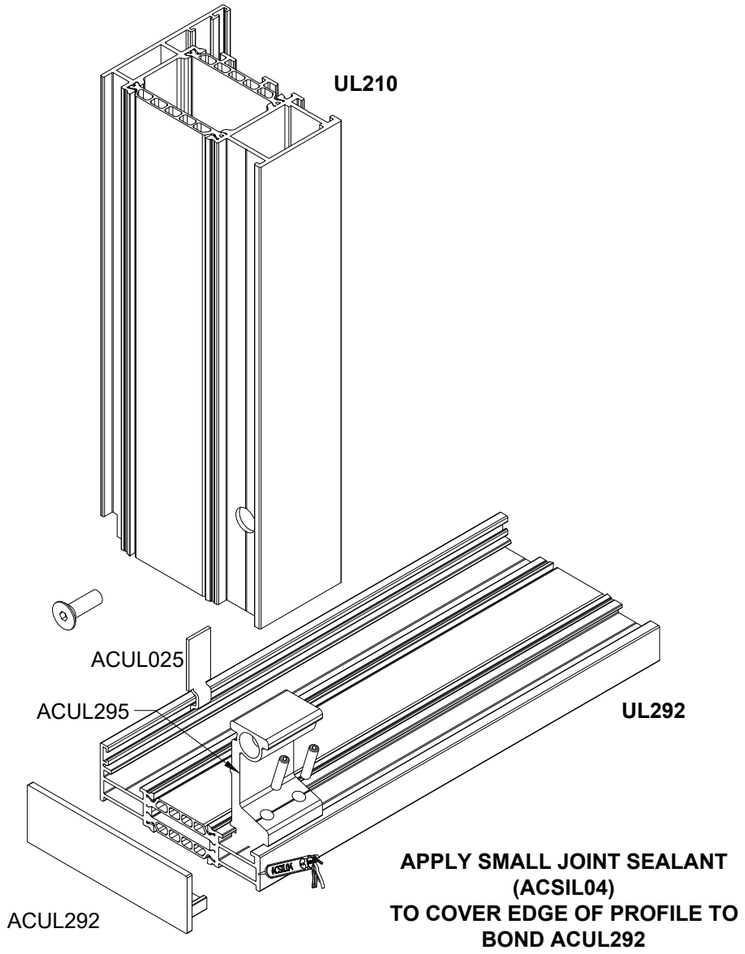

APPLY SMALL JOINT SEALANT
(ACSIL04)
TO COVER EDGE OF PROFILE TO
BOND ACUL292

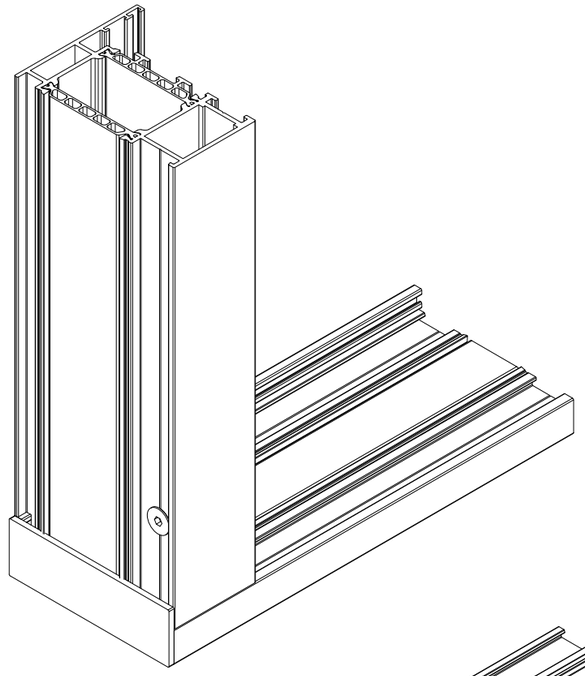

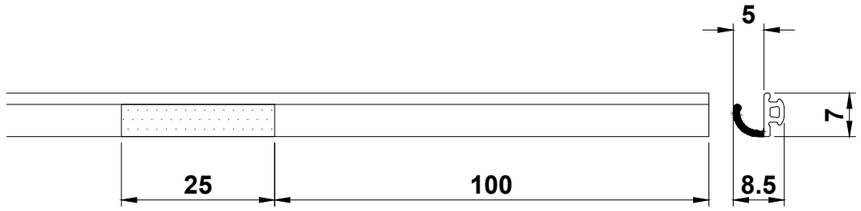

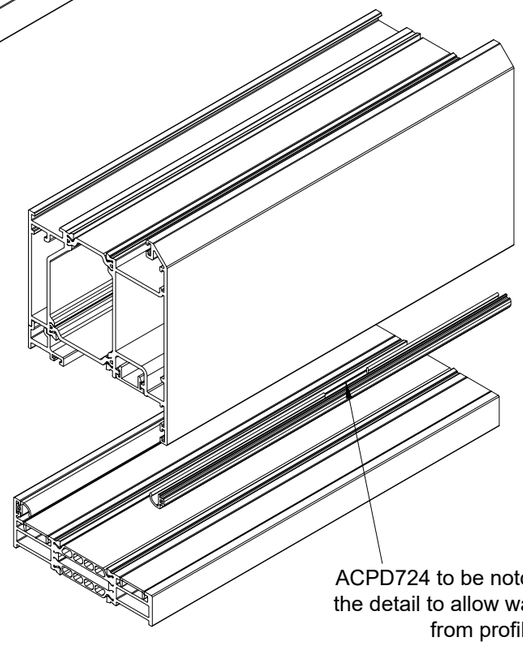

ACPD724 to be notched as per
the detail to allow water to drain
from profile

Do Not Scale From This Drawing

Low Ramp Threshold Assembly

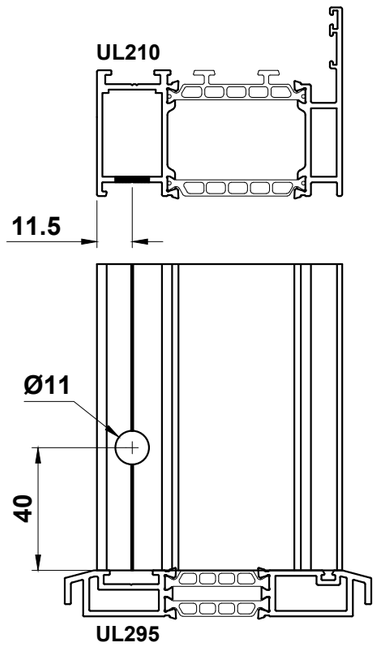

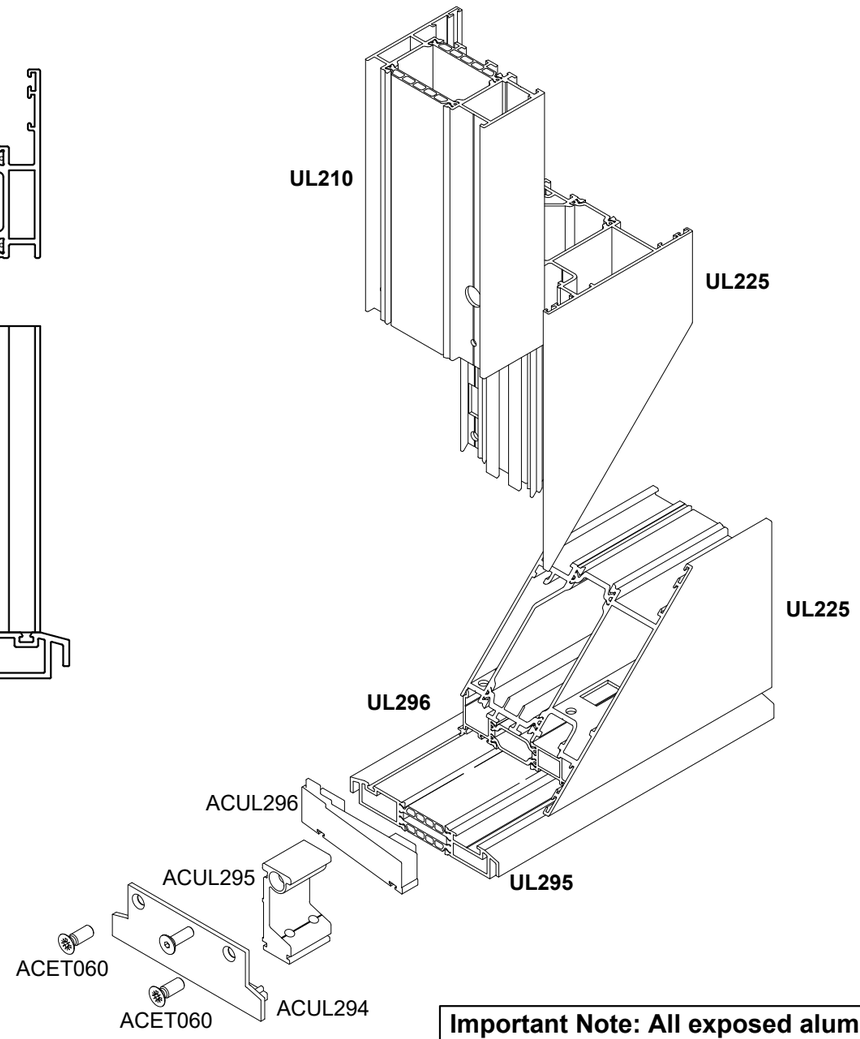

Important Note: All exposed aluminium should be coated using ACSIL014 or painted to match the frame.

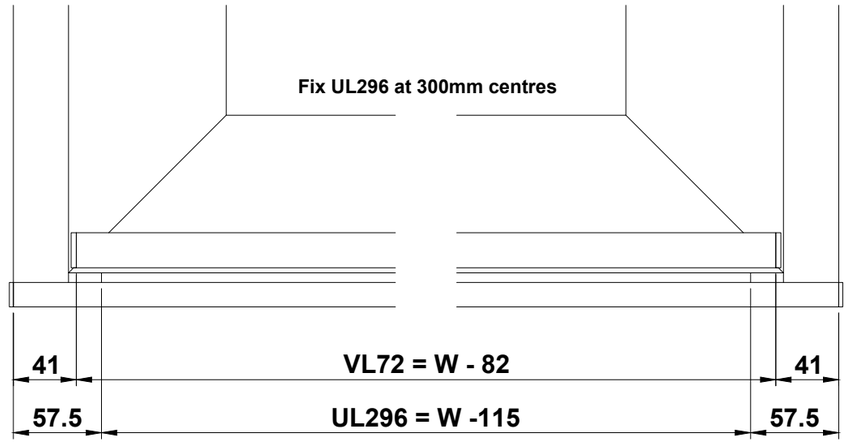

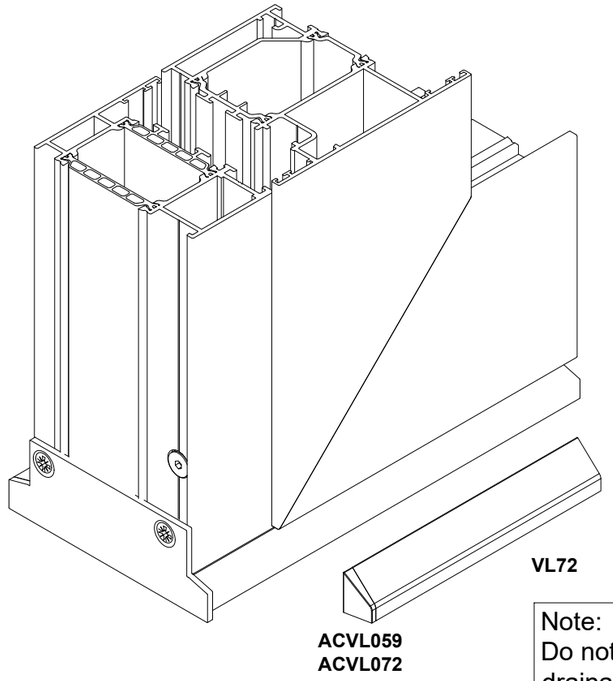

Note:
Do not drill down through drainage zone for installation.

Do Not Scale From This Drawing

Drainage

ACET131
Drainage cap
or
ACET432
Colour matched
drainage cap

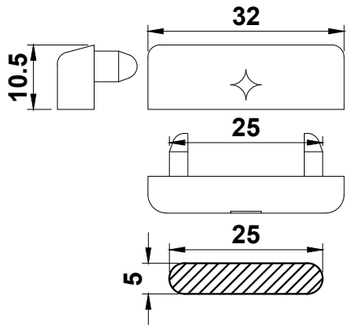

ACGSL045
Drainage Cap

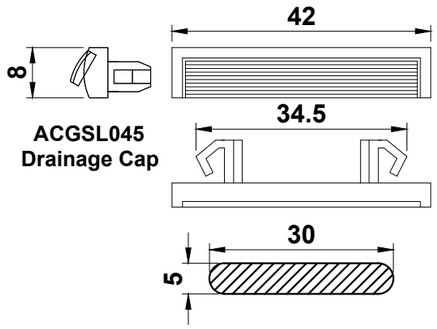

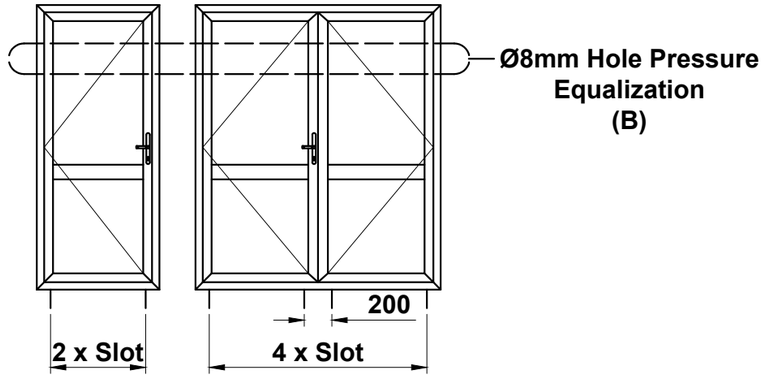

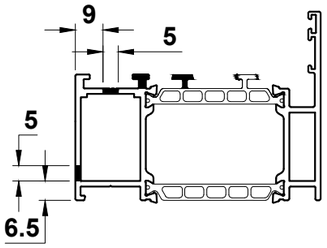

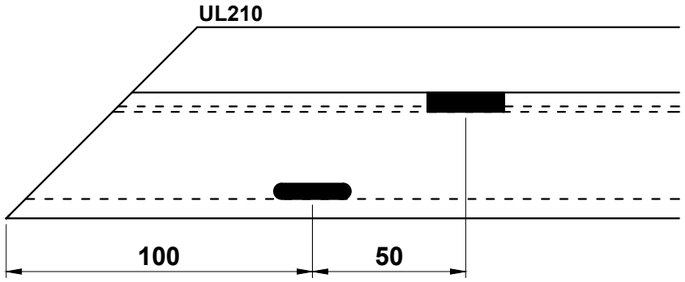

Option A

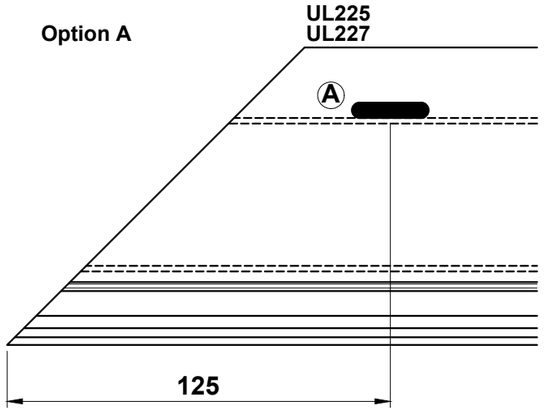

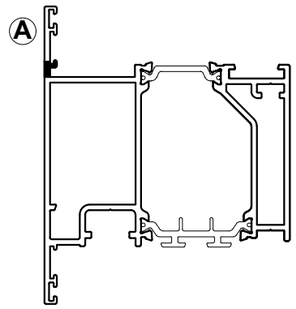

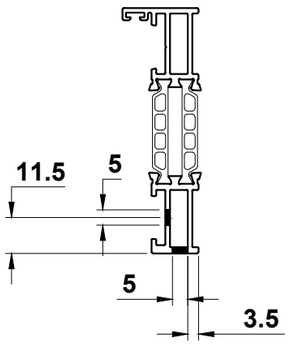

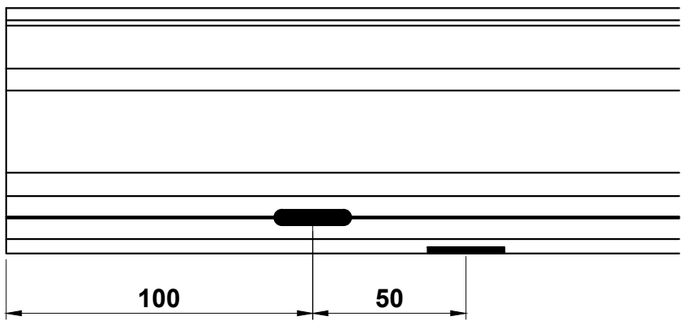

Option B

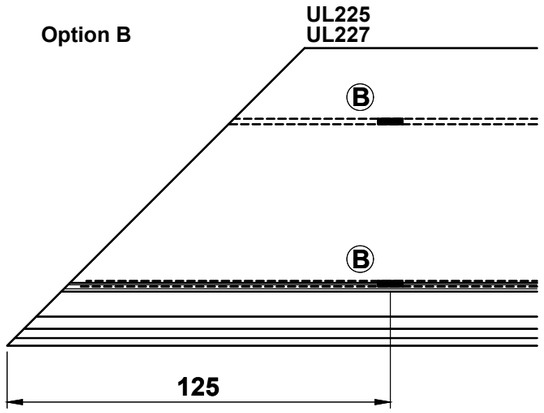

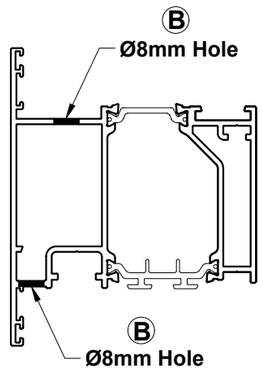

Sub Cill Drainage

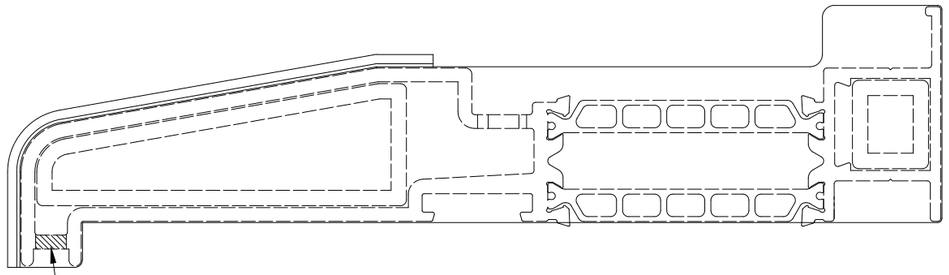

Drainage holes to be spaced 100mm in from each end and at approximately 300mm centres

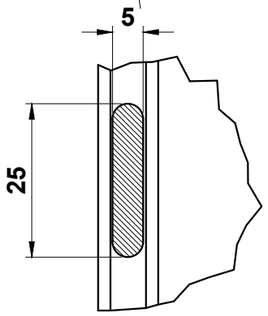

Drainage Option A

Drainage Option B

Ends of cills shall be dammed and sealed to prevent water egress

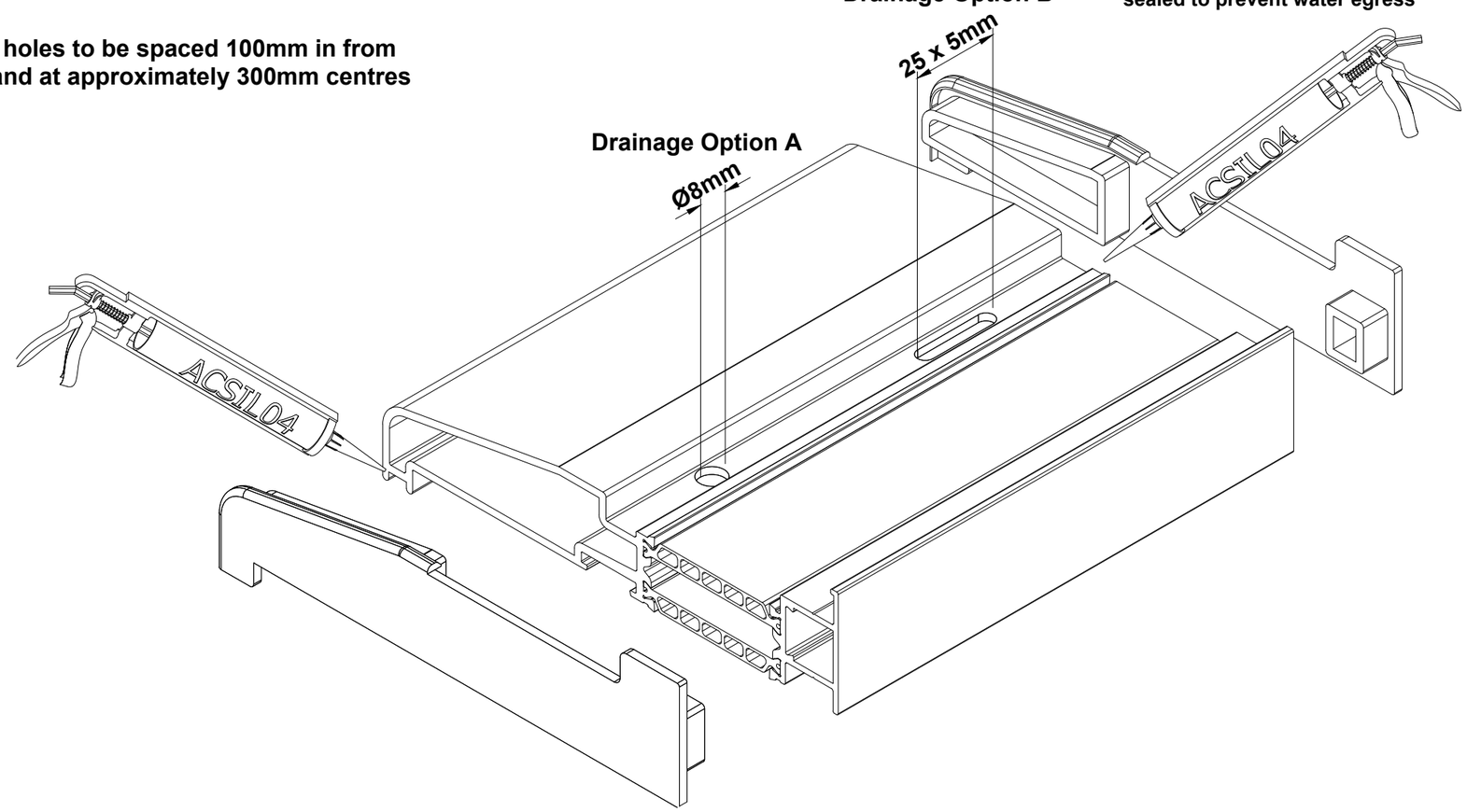

Do Not Scale From This Drawing

Sash - Transom Assembly

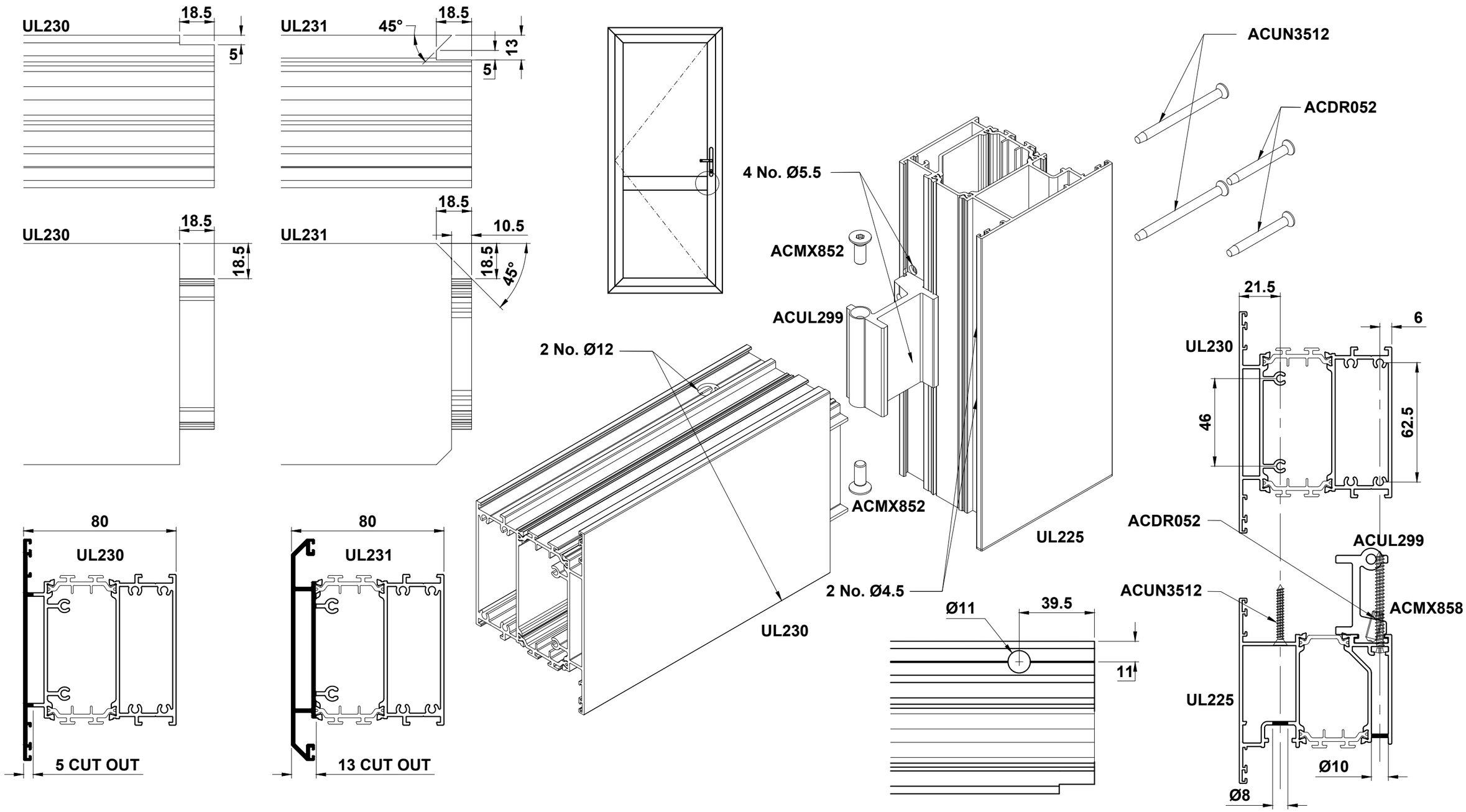

Do Not Scale From This Drawing

Outerframe - Transom Assembly

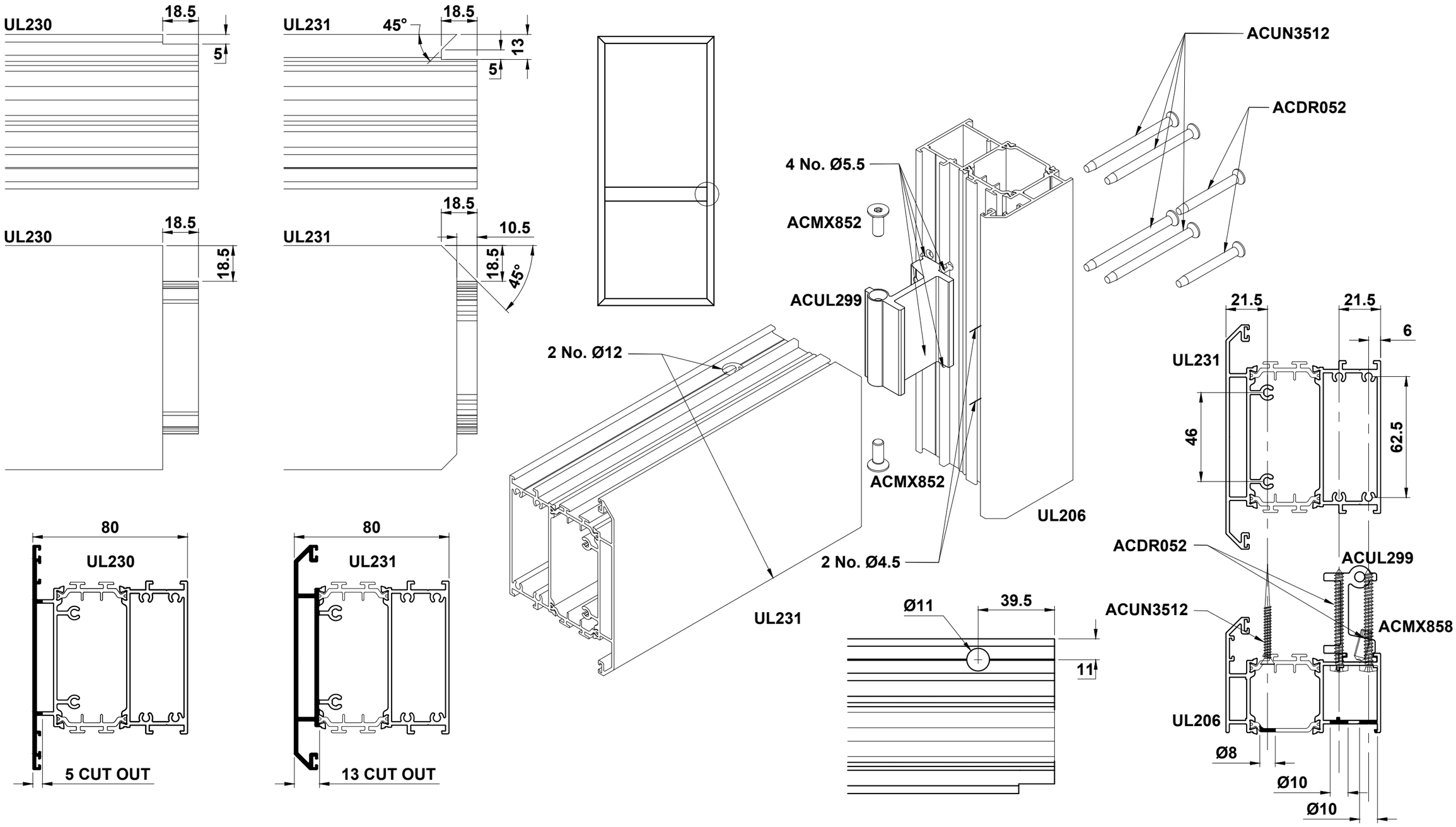

Do Not Scale From This Drawing

Stainless Steel Hardware - ACSM015, ACSM056, ACSM057, ACSM058, ACSM059 Fitting Detail

Please Note:
ACSM057 is compatible with slam locks and key operated locks only.
Slam locks must not have an external lever handle.

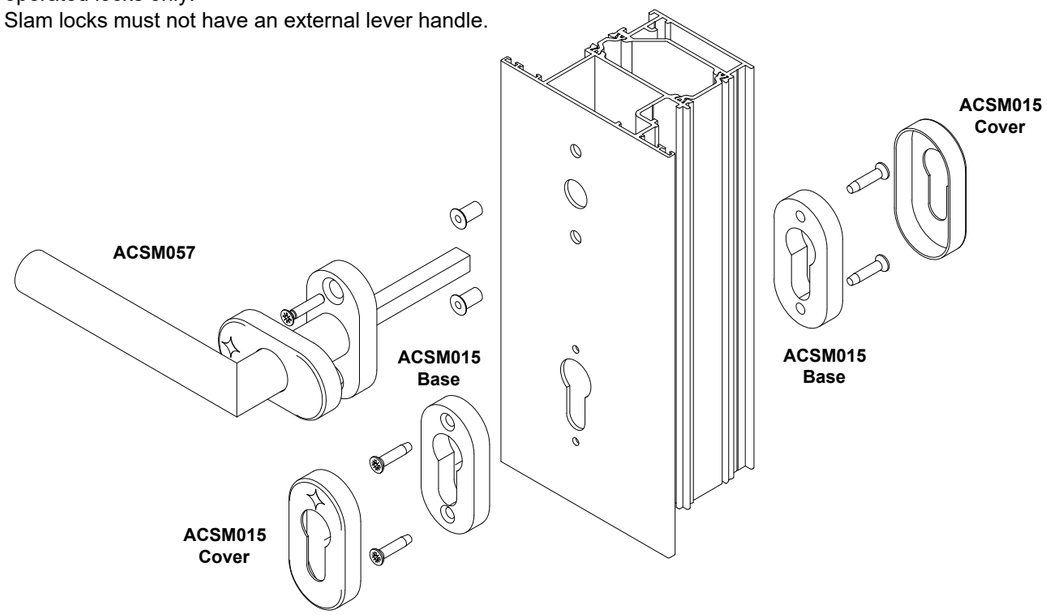

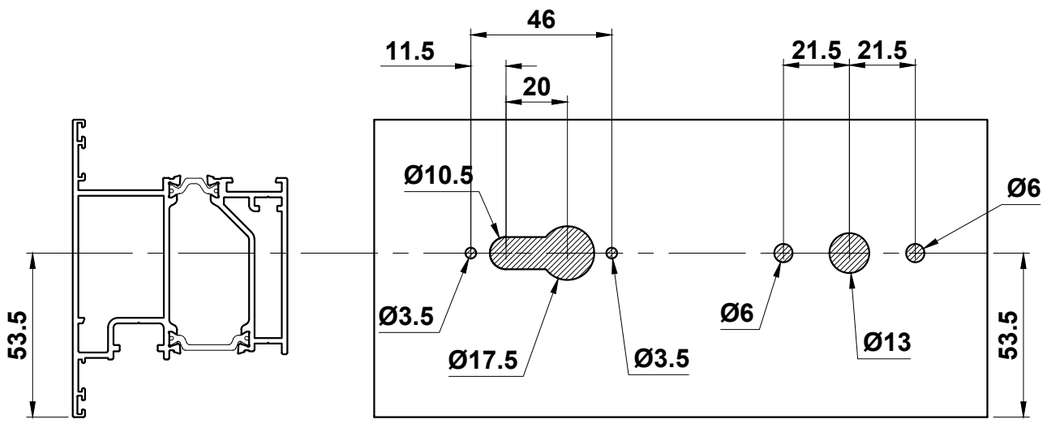

Please Note:
ACSM056 is compatible with all locks.
Slam locks must not have an external lever handle therefore require WCA134 & ACUN3509 for single side fixing and the spindle will need to be cut down.

Important Note: All exposed aluminium should be coated using ACSIL014 or painted to match the frame.

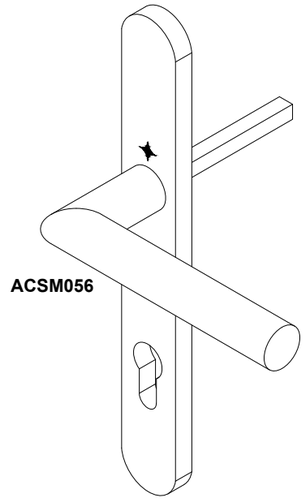

Please Note:
ACSM056SS pack contains;
2 x Universal Backplate & Lever
2 x Cover Plate
2 x Bolt Receiver Sleeve
2 x 40mm M5 Machine Screws
2 X 60mm M5 Machine Screws
1 x 3mm Allen Key
1 x 170mm Spindle

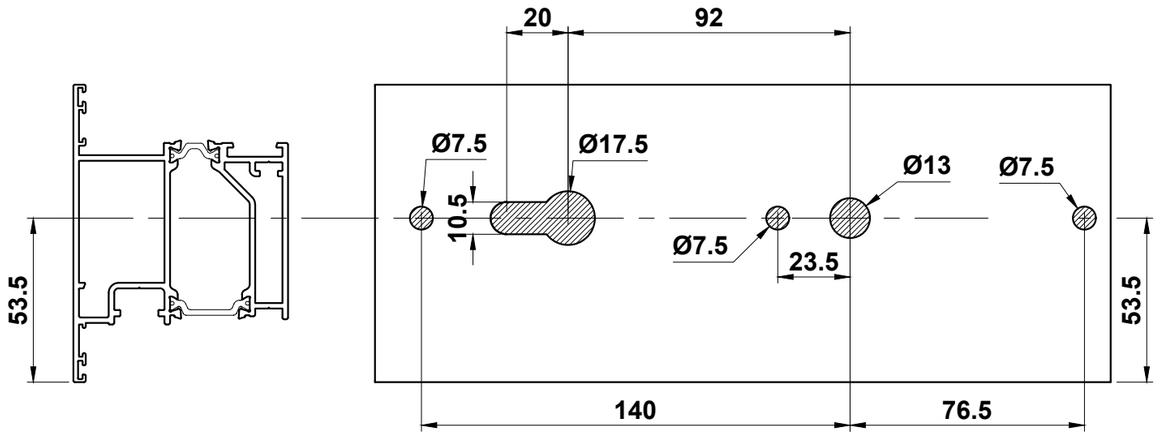

Do Not Scale From This Drawing

Panel Door Details with ACSM020 & ACSM021 Fitting Detail

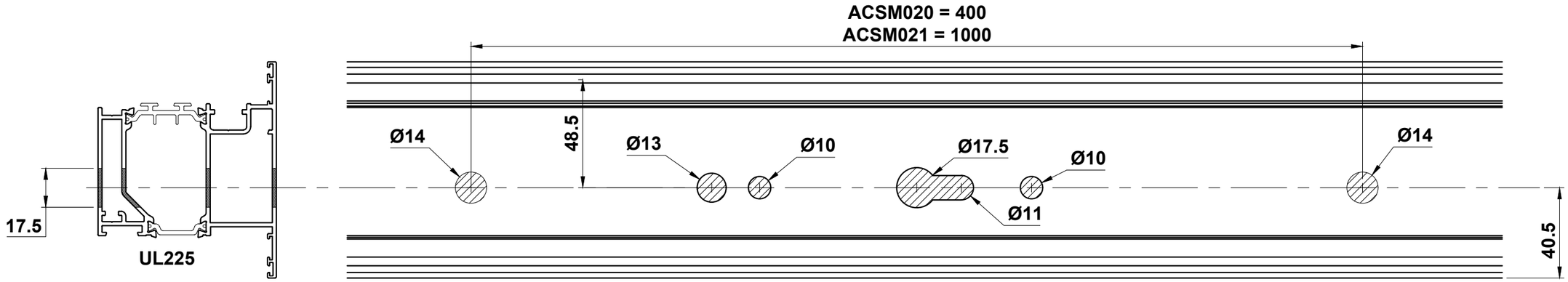

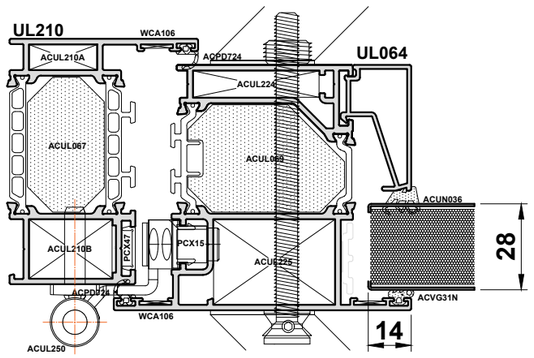

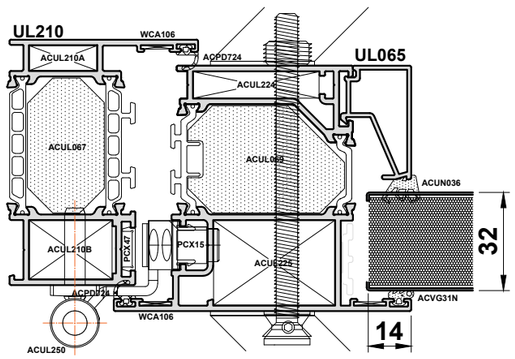

Panel will come as one piece with glass already bonded. Panel can range from 28mm, 32mm and 40mm thick and to be glazed as per details.

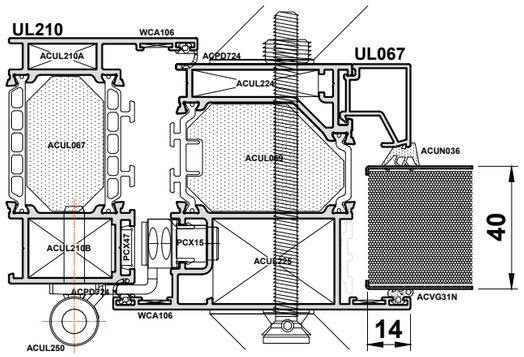

ACSM031 fixing kit is to be used when fixing two back to back handles. Screw will need to be cut down to size.

	Length (mm)	Single Handles
	600	ACSM037SS
	1200	ACSM038SS
		Pair Handles
	600	ACSM020SS
	1200	ACSM021SS

Single Sided Fixings
ACSM030
Back to Back Fixings
ACSM031

ACSM015

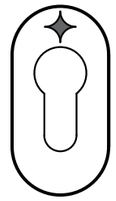

We recommend to use ACSM015 escutcheon and position centre of handle and inline with handle fixings as per prep above

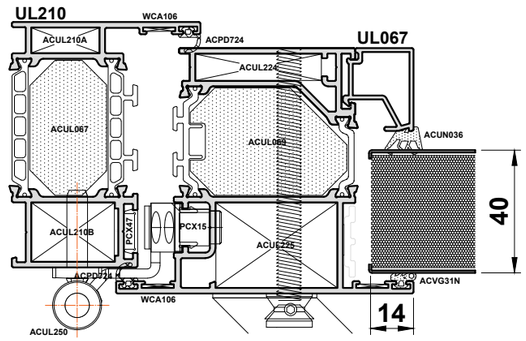

If a single handle is required, please use ACSM037 (400mm) or ACSM038 (1200mm) single handle with ACSM032 Secret fixing.

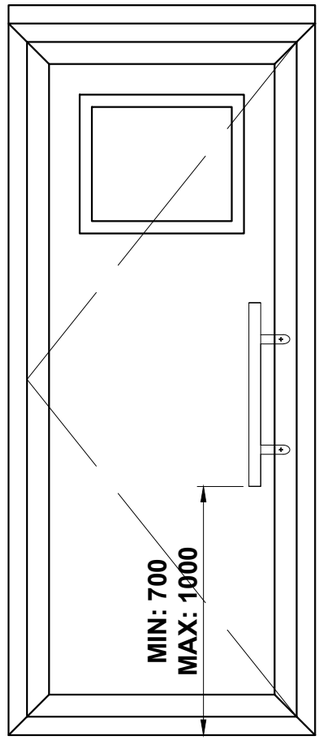

Do Not Scale From This Drawing

ACUL250 Hinge Preparation

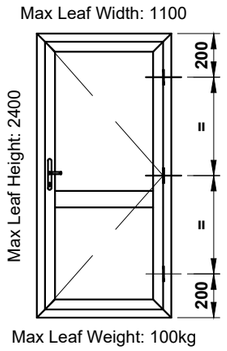

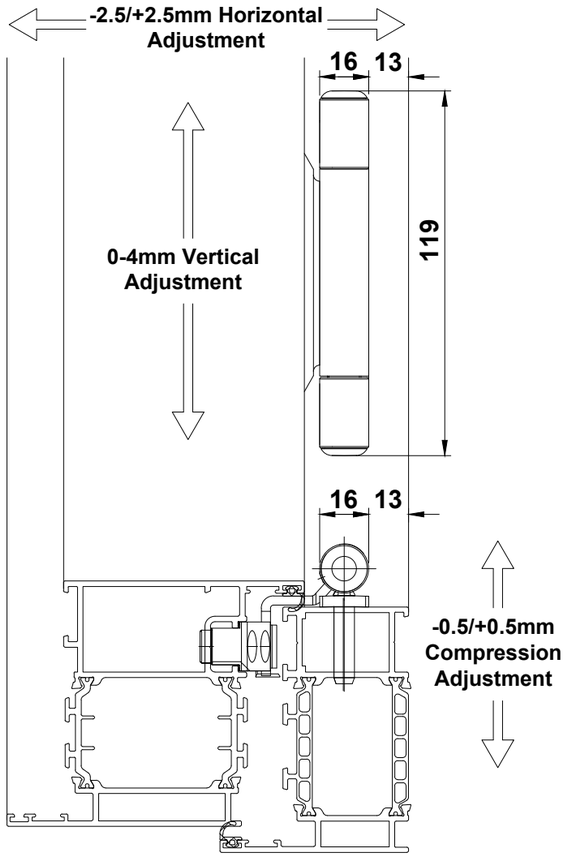

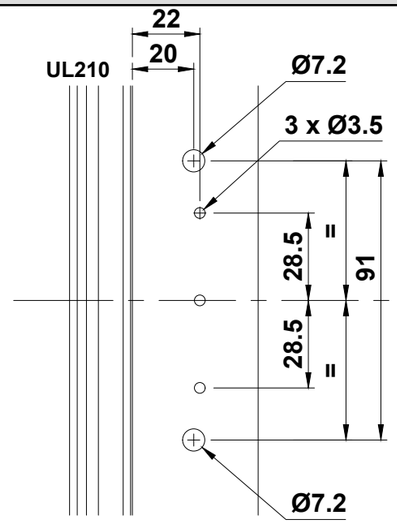

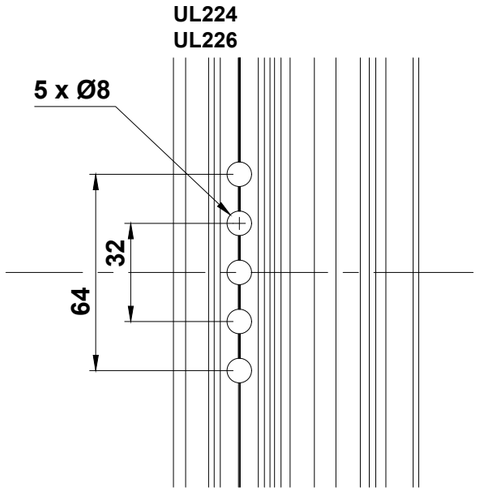

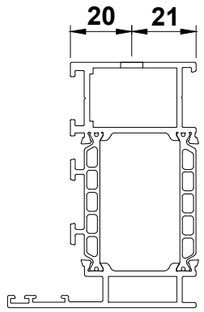

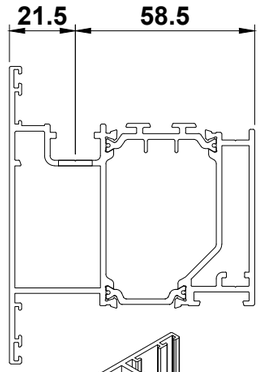

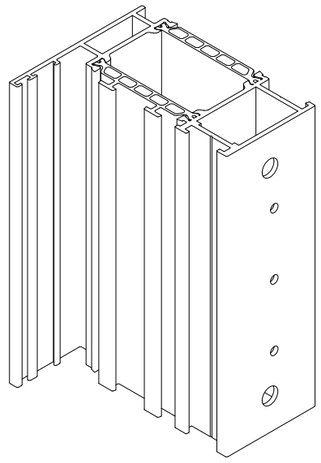

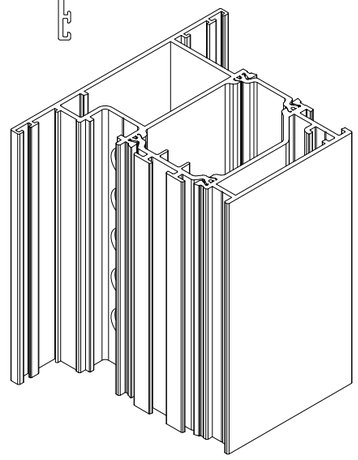

Fitting Instructions:
(Full instructions are supplied with each ACUL250 Hinge)

1. Align outer frame and sash in correct position
2. Clamp drill jig ACUL950 over the centre line of the hinge
3. Drill through all bushes marked '1' with a Ø7.2mm drill bit (supplied) and through all bushes marked '2' with a Ø3.5mm drill bit (not supplied)
4. Fasten the sash plate using ACIM062
5. Fasten the frame plate using ACUN3512 screws ensuring the grub screws are positioned towards the door sash
6. Drive in the central barrel until it lines up with the rings on the frame plate
7. Drive in pin 'B' to the top of the hinge and then drive in pin 'A' to the bottom of the hinge
8. Open the door and lightly tighten the security screws
9. Adjust hinge as required then insert caps and cover caps.

Do Not Scale From This Drawing

Single Door Locking & SZ Hardware Options

Slam Lock Guide

Overall Door Height	Spindle Height (X)	Kit Part Number	
		Left Hand	Right Hand
2030-2230	1050	ACUL280	ACUL281
1820-2029	1050	ACUL360	ACUL361
2231-2450	1050	ACUL380	ACUL381

Key Operated Lock Guide

Overall Door Height	Spindle Height (X)	Kit Part Number	
		Left Hand	Right Hand
2030-2230	1050	ACUL282	ACUL283
1820-2029	1050	ACUL362	ACUL363
2231-2450	1050	ACUL382	ACUL383

Note: 1. Height limits apply to all threshold options.
2. The handles shown here are not compatible with lift lever locks.

Handle With Large Backplate Guide

Ext. Handle	Int. Handle	Spindle	Cylinder	Screw	Rivnuts
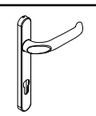		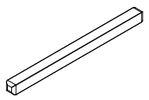	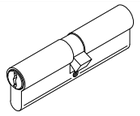	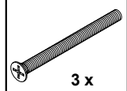 3 x	
ACSZ800	ACSZ801 ACSZ803 ACSZ830 T	ACMX409Sq. Spindle 150mm	ACCY0035 Half Cylinder	ACMX861 M5 x 75mm	
ACSZ802	ACSZ803 ACSZ830		ACCY3570S3 35/70 Cylinder		
ACSZ400	ACSZ803 ACSZ830	ACMX008 Sq. Spindle 60mm	ACCY3570S3 35/70 Cylinder	WCA134 M5 x 20mm	ACUN3509 M5

Keep Handing Guide

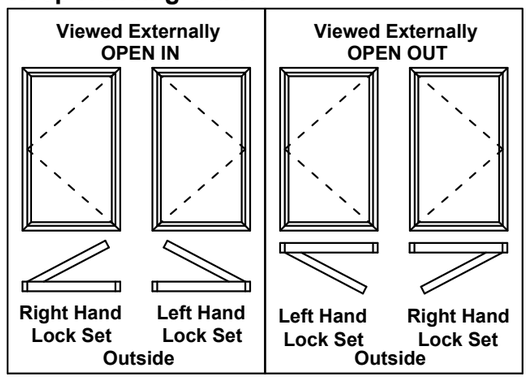

Handle with Small Backplate Guide

Ext. Handle	Ext. Escutcheon	Int. Handle	Int. Escutcheon	Spindle	Cylinder	Screw	Rivnuts
	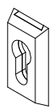		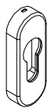	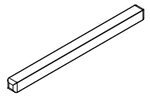	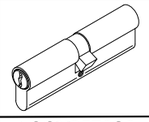		
ACSZ837	ACSZ400	ACSZ836	ACMX208	ACMX409Sq. Spindle 150mm	ACCY3570S3 ACCY0035	WCA134 M5 x 20mm	ACUN3509 M5
	ACSZ400			ACMX008 Sq. Spindle 60mm	ACCY3570S3 ACCY0035	WCA134 M5 x 20mm	ACUN3509 M5
ACSZ837	ACSZ400	ACSZ827 T		ACMX409Sq. Spindle 150mm	ACCY3570S3 ACMX0035	WCA134 M5 x 20mm	ACUN3509 M5

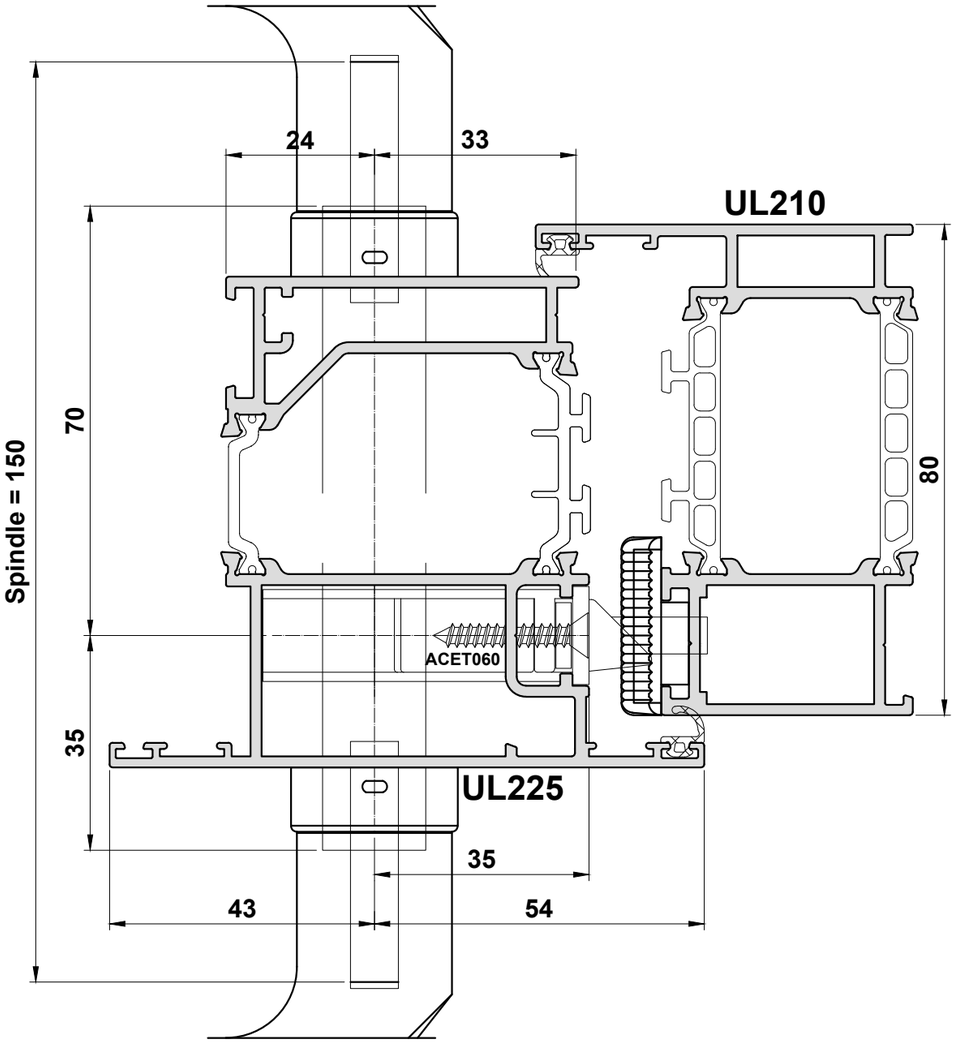

With Cylinder
Without Cylinder
T Handle With Cylinder
T Handle Without Cylinder

Do Not Scale From This Drawing

ISSUED: OCTOBER 2022

Lock Overview of Single and Double Doors

Finger Bolt Locking Options

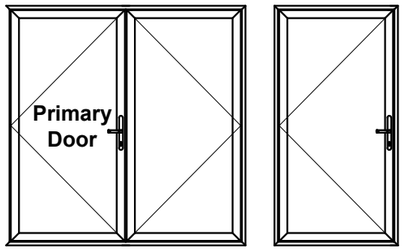

Single & Primary Door Lock Selection

Overall Sash Height	Lift Lever		Slam Lock		Key Wind	
	Left	Right	Left	Right	Left	Right
2030-2230 (Standard)	ACUL272	ACUL273	ACUL280	ACUL281	ACUL282	ACUL283
1820-2029 (Short)	ACUL377	ACUL378	ACUL360	ACUL361	ACUL362	ACUL363
2231-2450* (Tall)	ACUL374	ACUL375	ACUL380	ACUL381	ACUL382	ACUL383

*Any doors above 2450mm are above the tested limit.

Secondary Door Accessory Selection

35mm Backset Shootbolt Adaptor	Bottom 10mm Dia Rod	Top 10mm Dia Rod		Keep	Shootbolt Guide
		Overall Size	Rod Part No.		
ACPD844 	ACPD846 (1000mm)	1820 - 1923	ACPD846 (1000mm)	ACUL390 (2 Required)	ACUL242 (2 Required)
		1923 - 2173	ACPD847 (1250mm)		
		2174 - 2323	ACPD848 (1500mm)		
		2323 - 2423*	ACPD848 (1500mm)		

*For doors above 2423mm, use ACPD849 (2000mm)

Lift Lever Locking Options

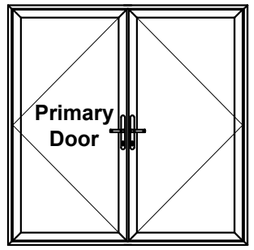

Double Handle Lift Lever Lock Option

Overall Sash Height	Primary Door Lift Lever		Secondary Door Lift Lever	Double Door Keep	Shootbolts	Shootbolt Extensions
	Left	Right				
980-2450*	ACUL277	ACUL278	ACUL276	ACUL279	ACDV737 ACDV738	ACDV742 ACDV744

*Any doors above 2450mm are above the tested limit.
**Please see page E17 for shootbolt layout.

Keep Handing Guide

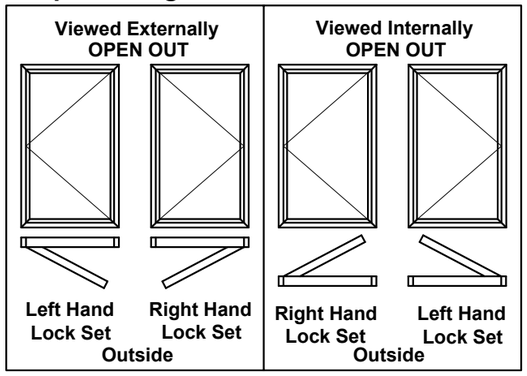

Do Not Scale From This Drawing

Single Door Lock Prep

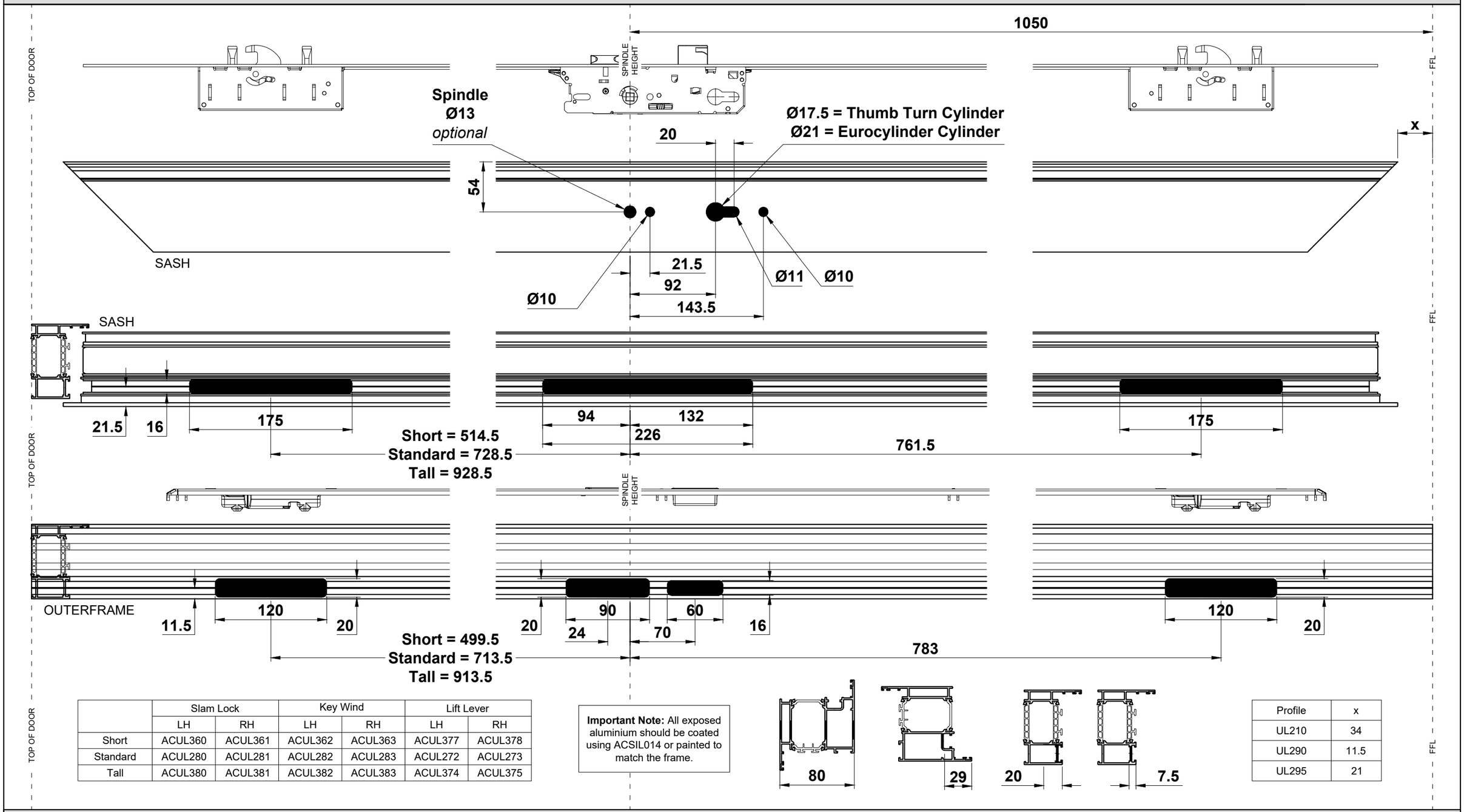

	Slam Lock		Key Wind		Lift Lever	
	LH	RH	LH	RH	LH	RH
Short	ACUL360	ACUL361	ACUL362	ACUL363	ACUL377	ACUL378
Standard	ACUL280	ACUL281	ACUL282	ACUL283	ACUL272	ACUL273
Tall	ACUL380	ACUL381	ACUL382	ACUL383	ACUL374	ACUL375

Important Note: All exposed aluminium should be coated using ACSIL014 or painted to match the frame.

Profile	x
UL210	34
UL290	11.5
UL295	21

Do Not Scale From This Drawing

Double Door Shootbolt Layout

Note: ACDV742 & ACDV744 extensions may used with all locks

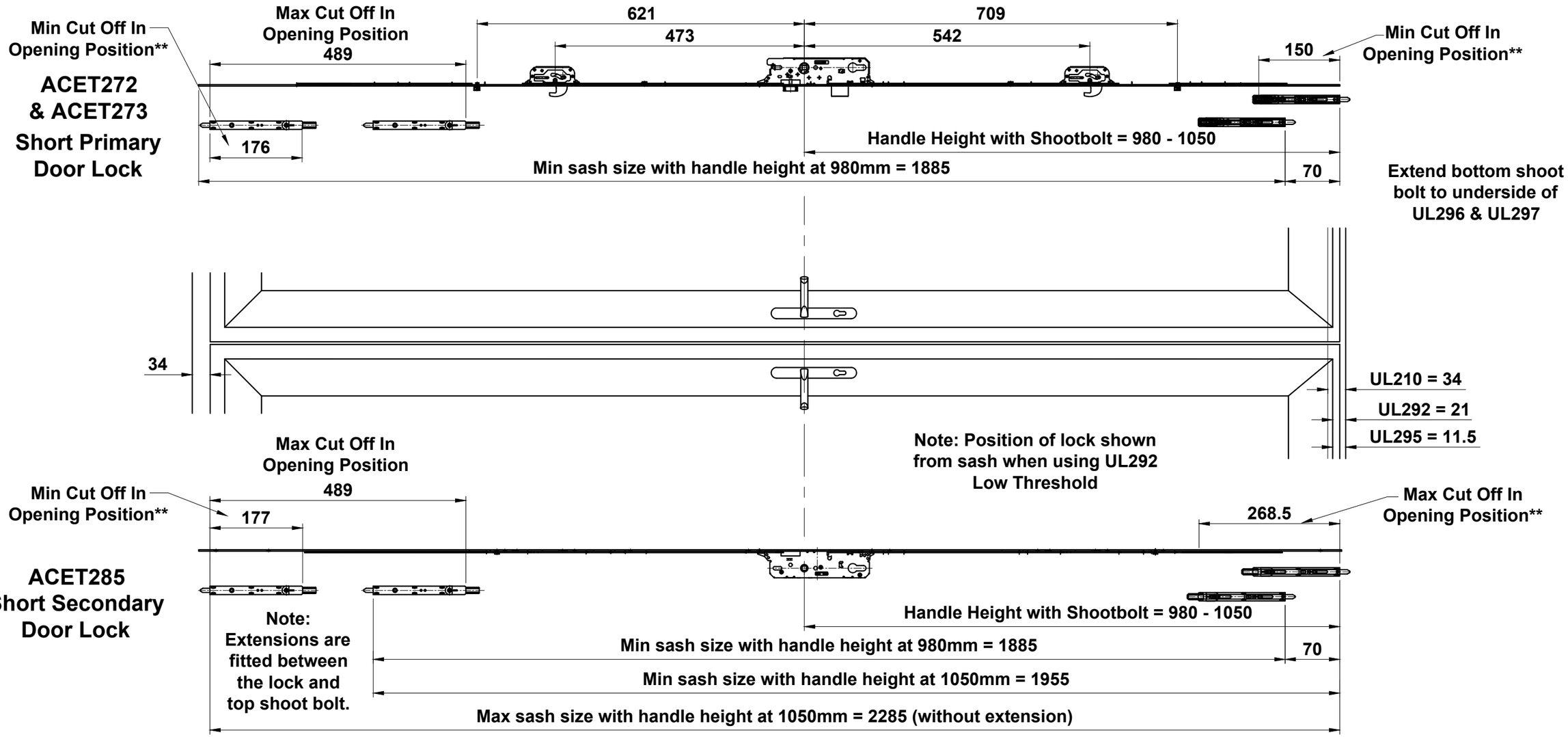

*Maximum sash height is 2500mm. Sizes shown here only indicate sizes with ACDV744.
**Minimum cut off positions are required to fit the shoot bolts.

Double Door Lift Lever Lock Preparation

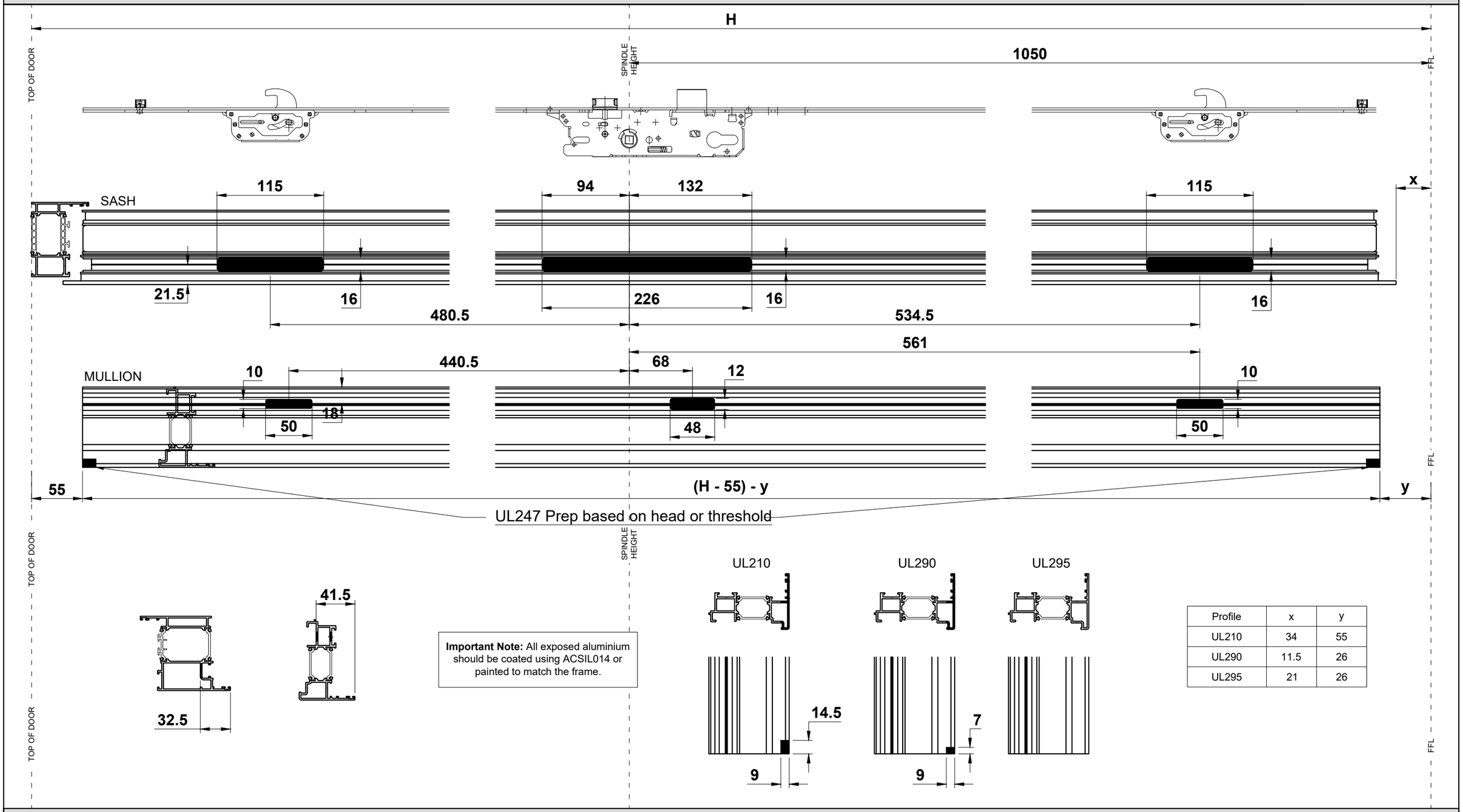

Important Note: All exposed aluminium should be coated using ACSIL014 or painted to match the frame.

Profile	x	y
UL210	34	55
UL290	11.5	26
UL295	21	26

Do Not Scale From This Drawing

Double Door Lift Lever Meeting Stile Assembly - Full Frame

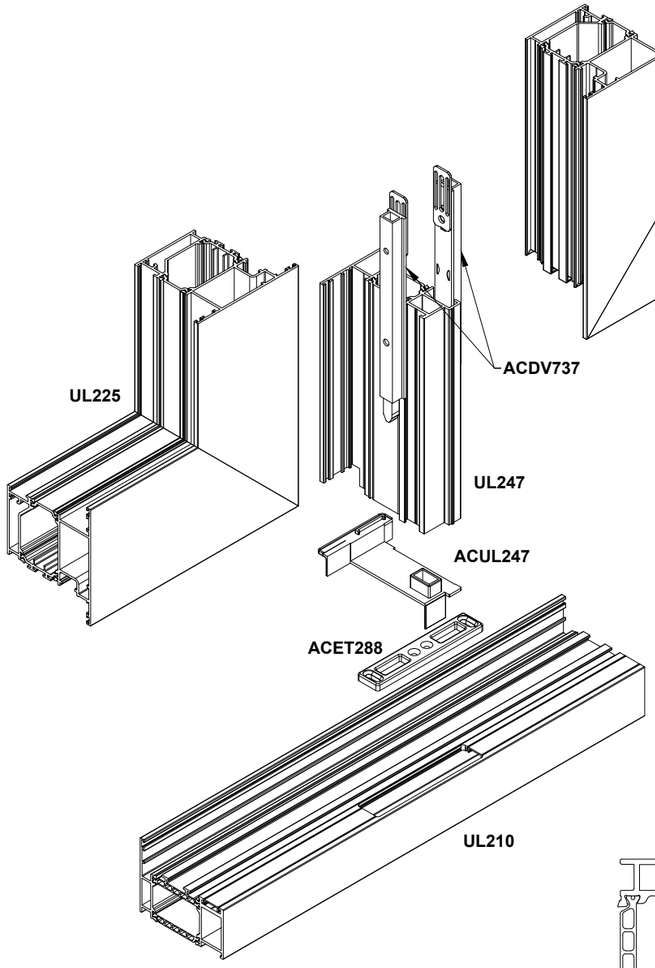

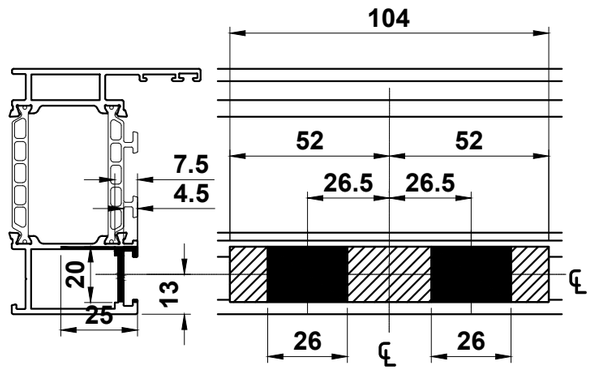

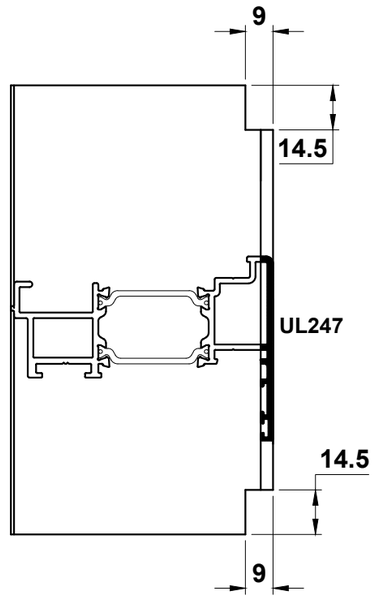

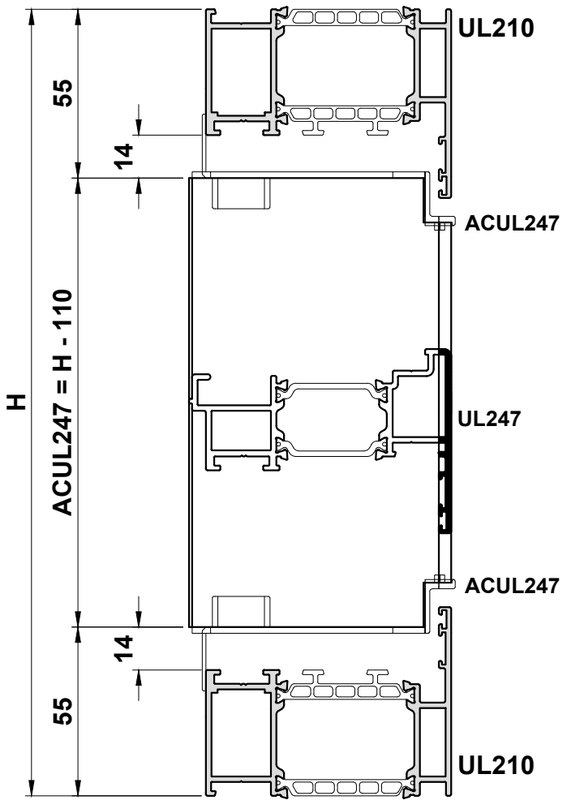

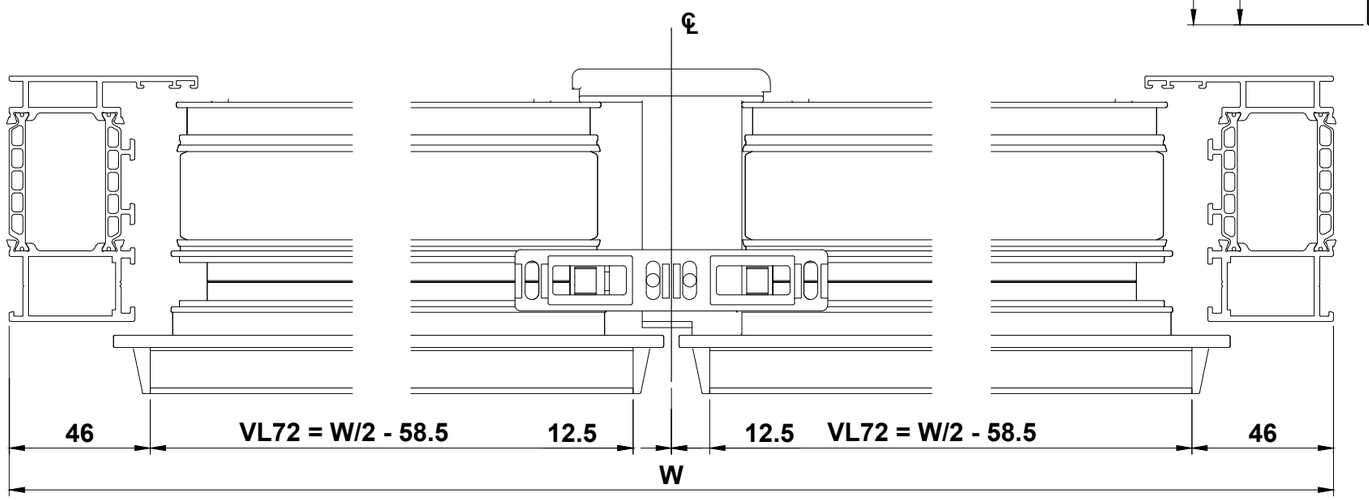

Note: All routing on outer frame require sealant to stop water leakage

Double Door Lift Lever Meeting Stile Assembly - Low Rebated Threshold

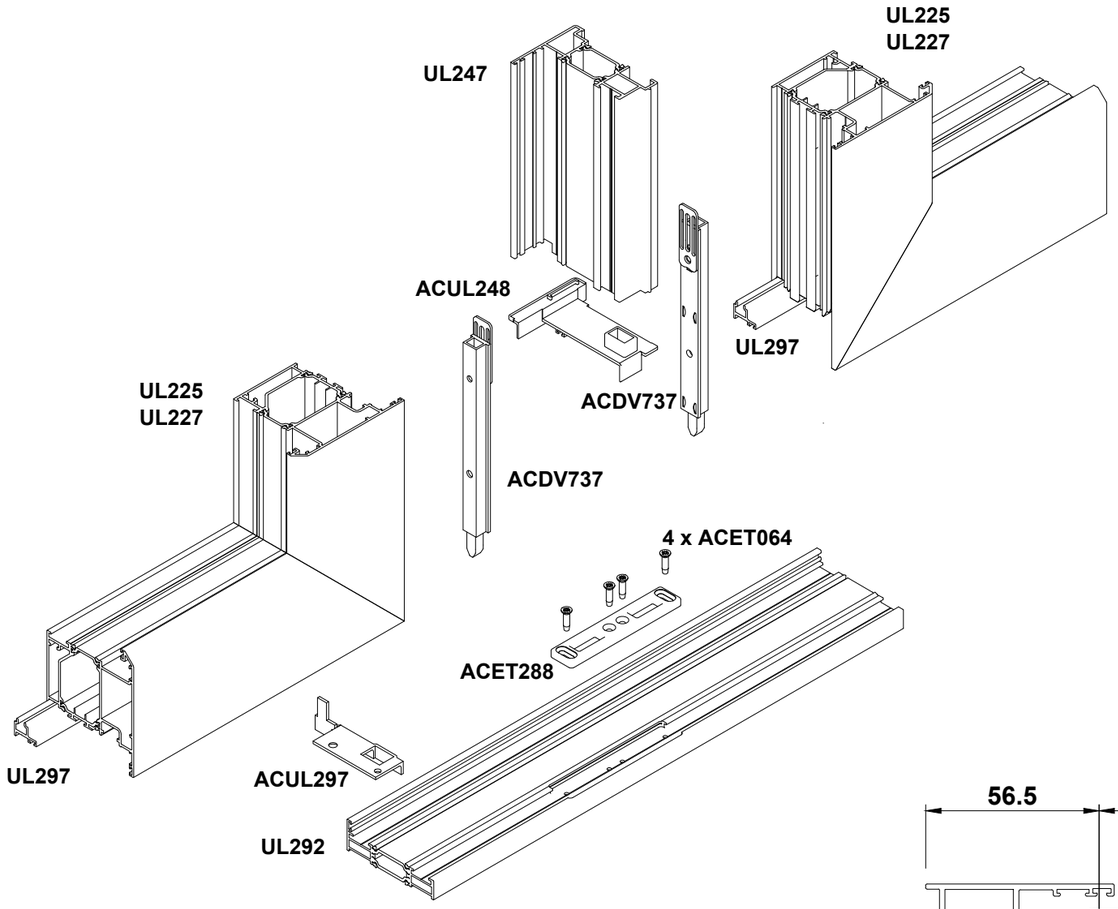

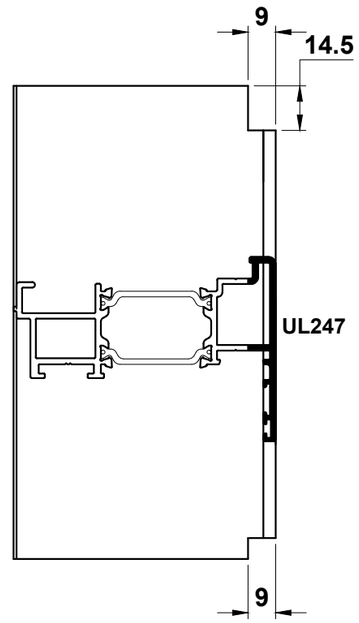

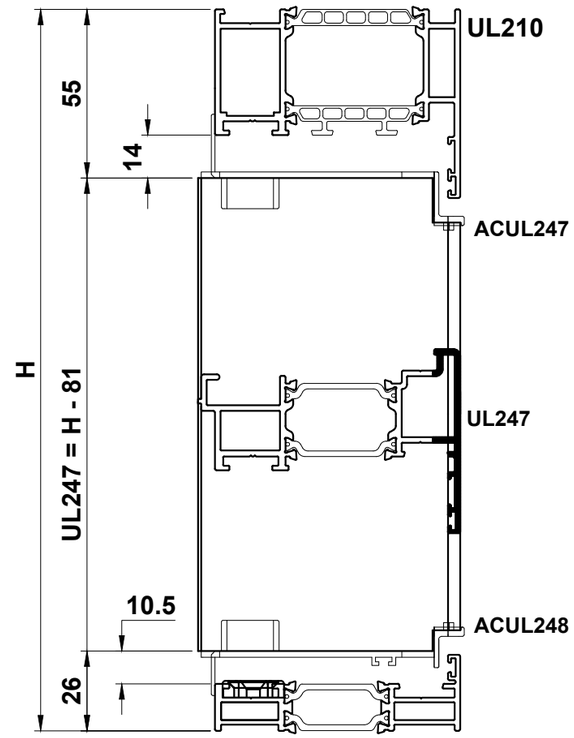

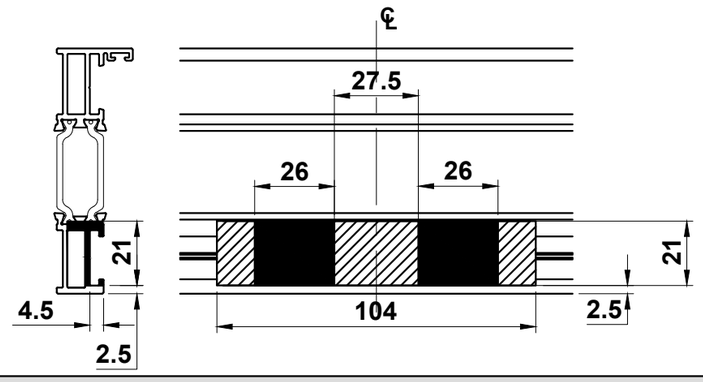

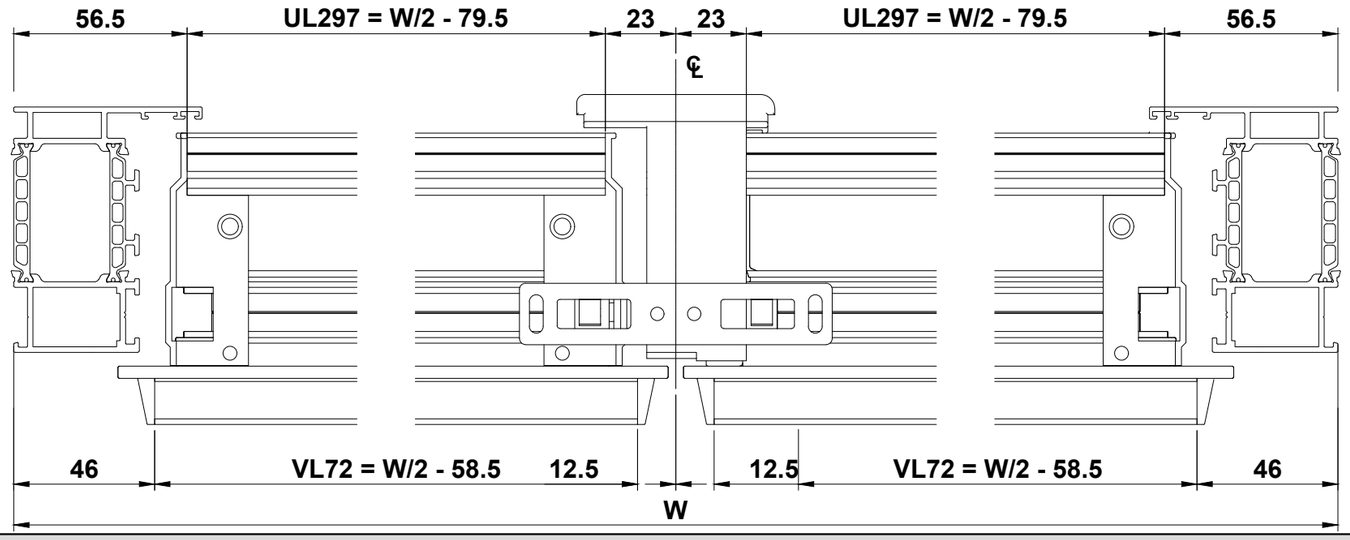

Do Not Scale From This Drawing

Double Door Lift Lever Meeting Stile Assembly - Low Rebated Threshold

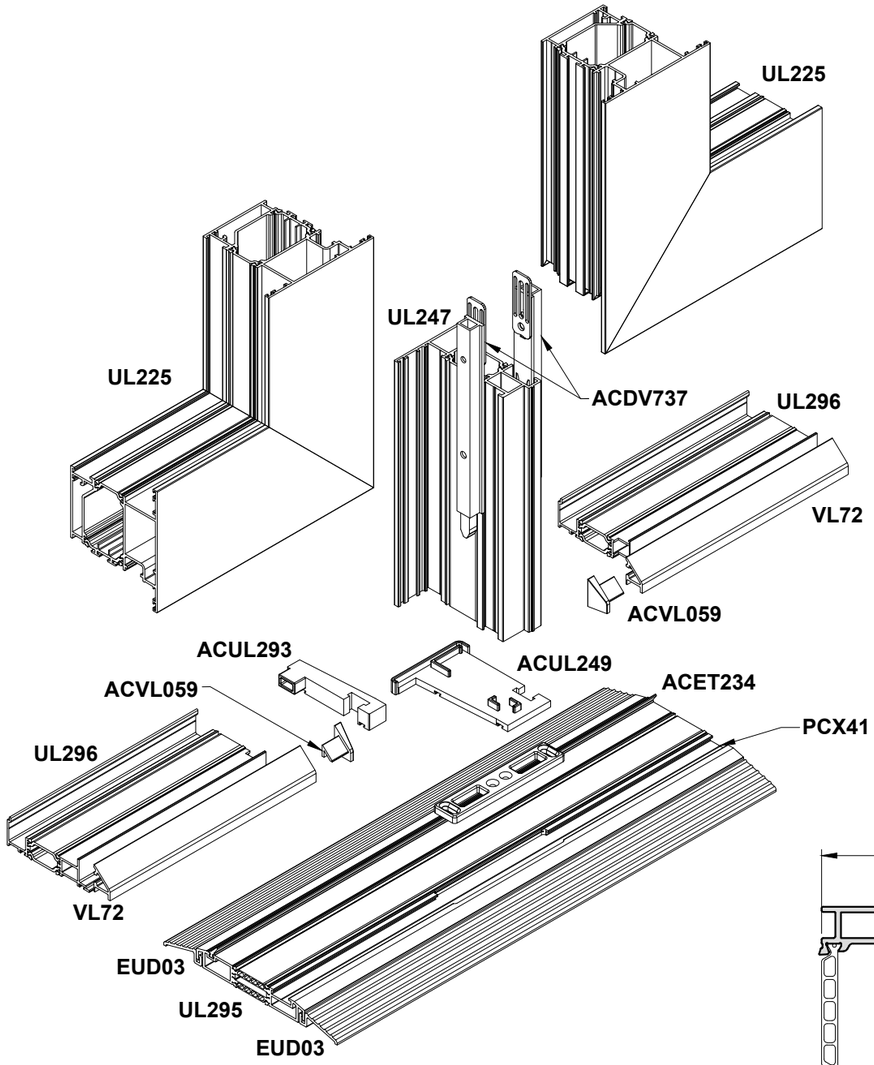

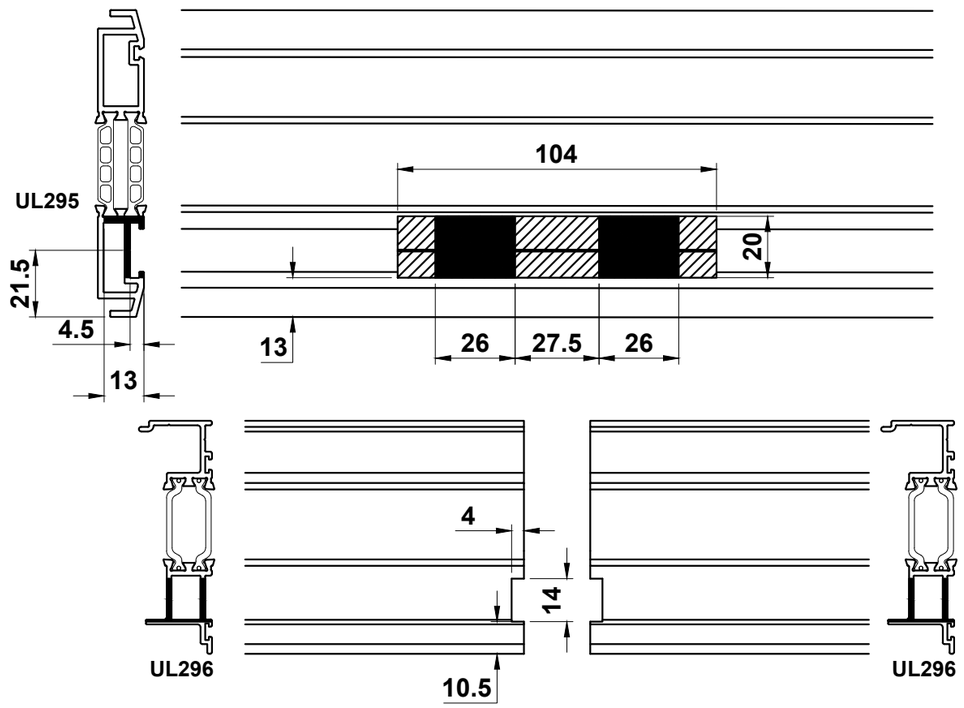

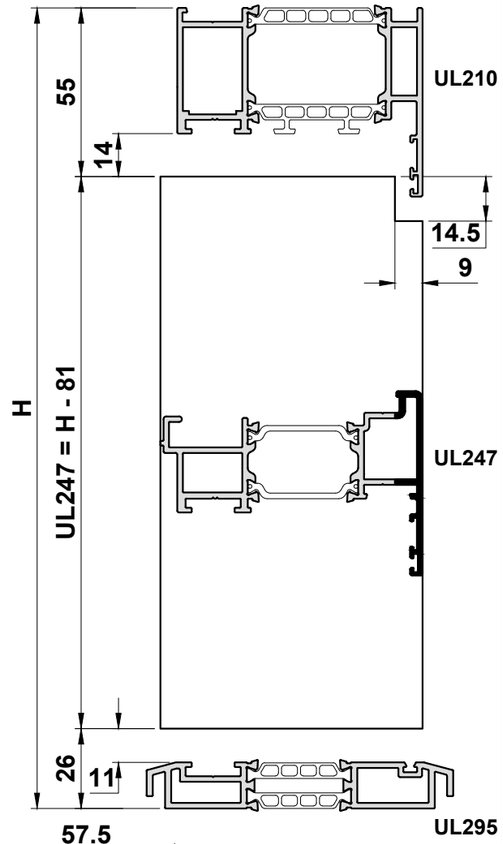

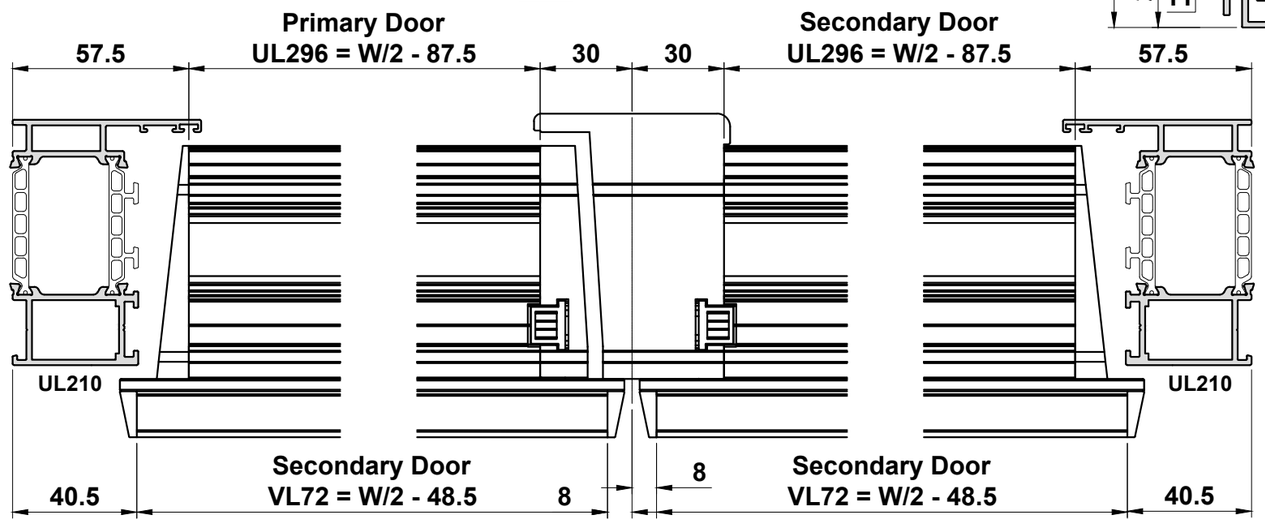

Double Door Finger Bolt Lock Preparation

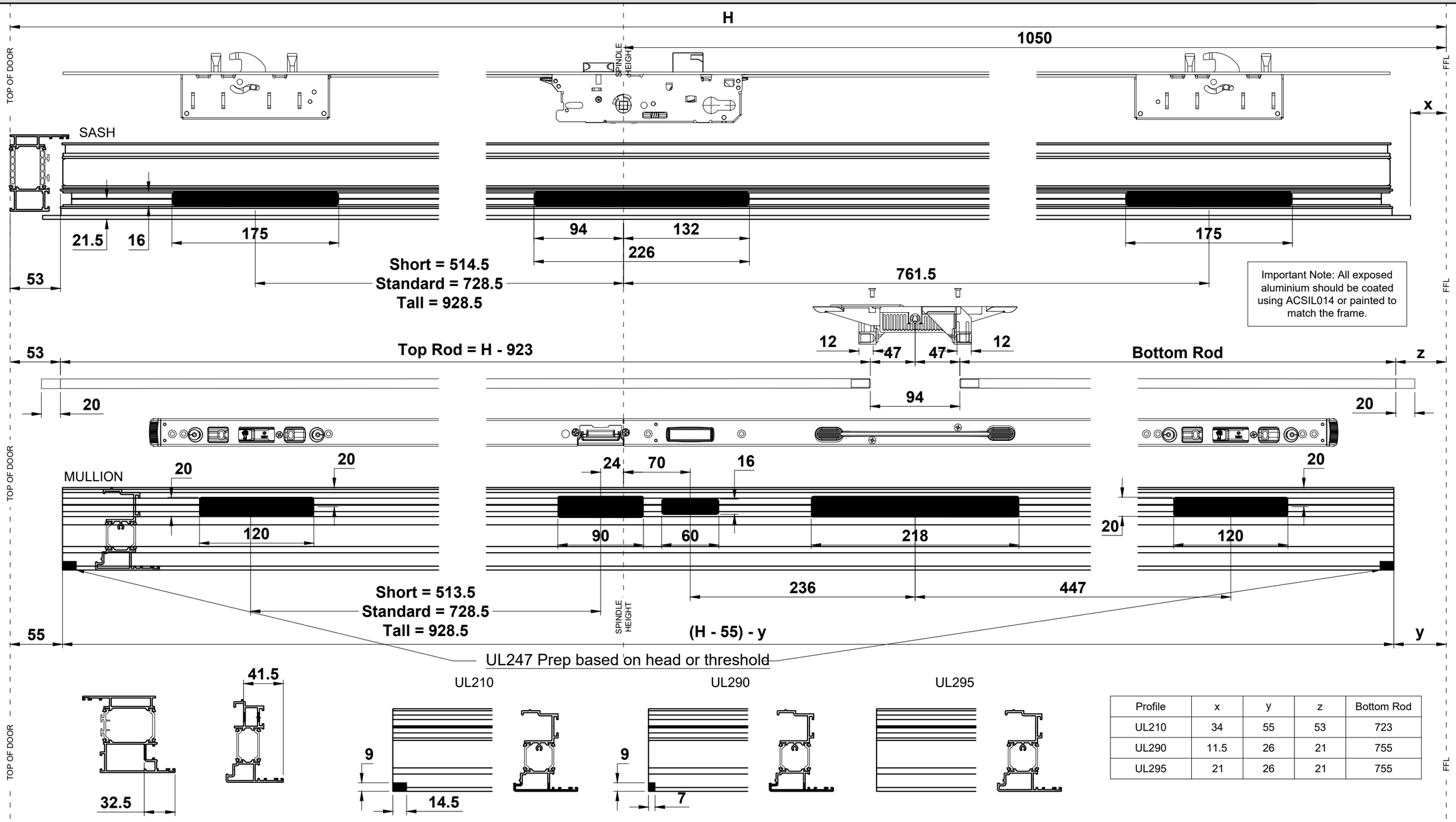

Profile	x	y	z	Bottom Rod
UL210	34	55	53	723
UL290	11.5	26	21	755
UL295	21	26	21	755

Do Not Scale From This Drawing

Double Door Finger Bolt Meeting Stile Assembly - Full Frame

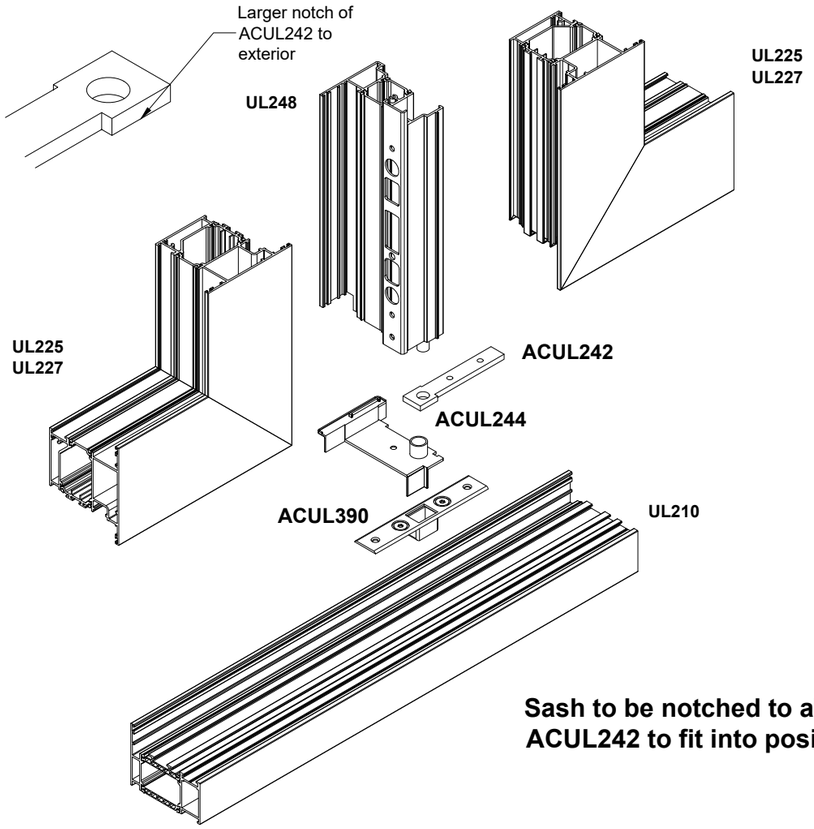

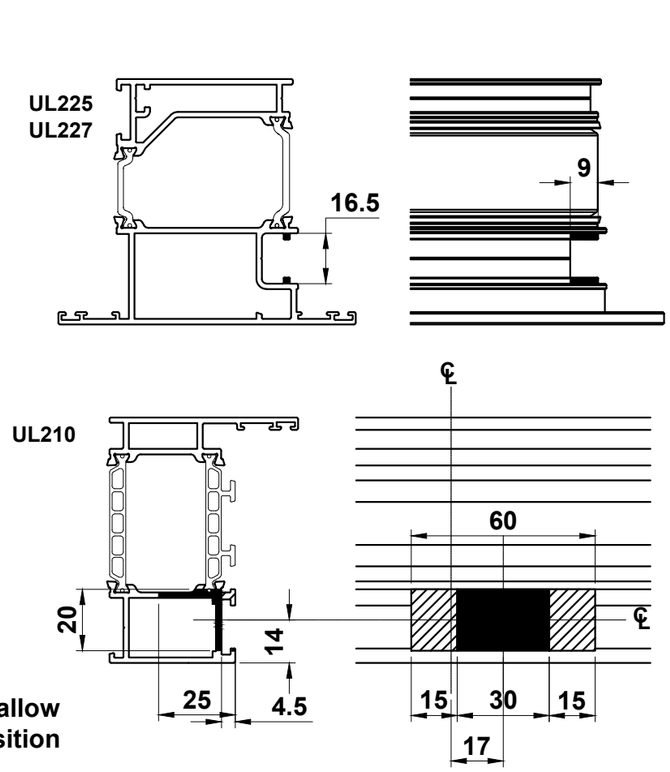

Sash to be notched to allow ACUL242 to fit into position

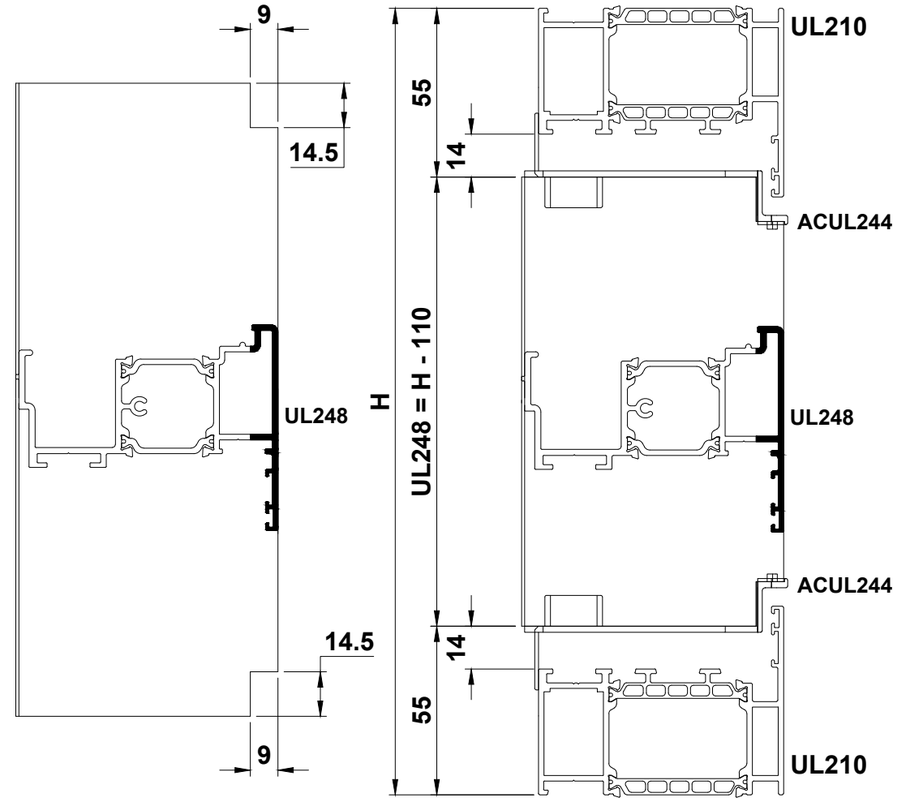

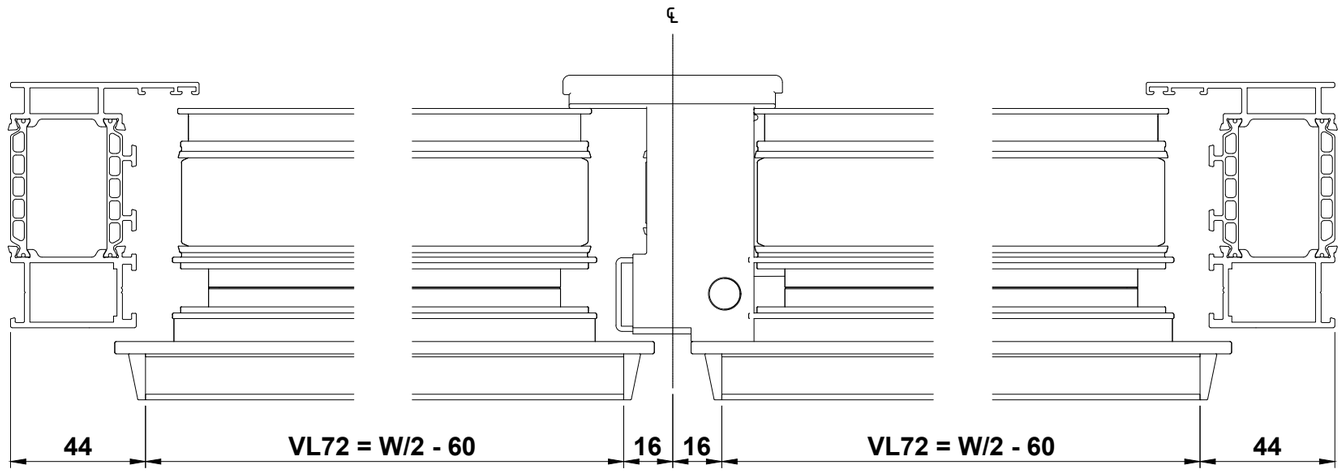

Note: All routing on outer frame require sealant to stop water leakage

Double Door Finger Bolt Meeting Stile Assembly - Low Rebated Threshold

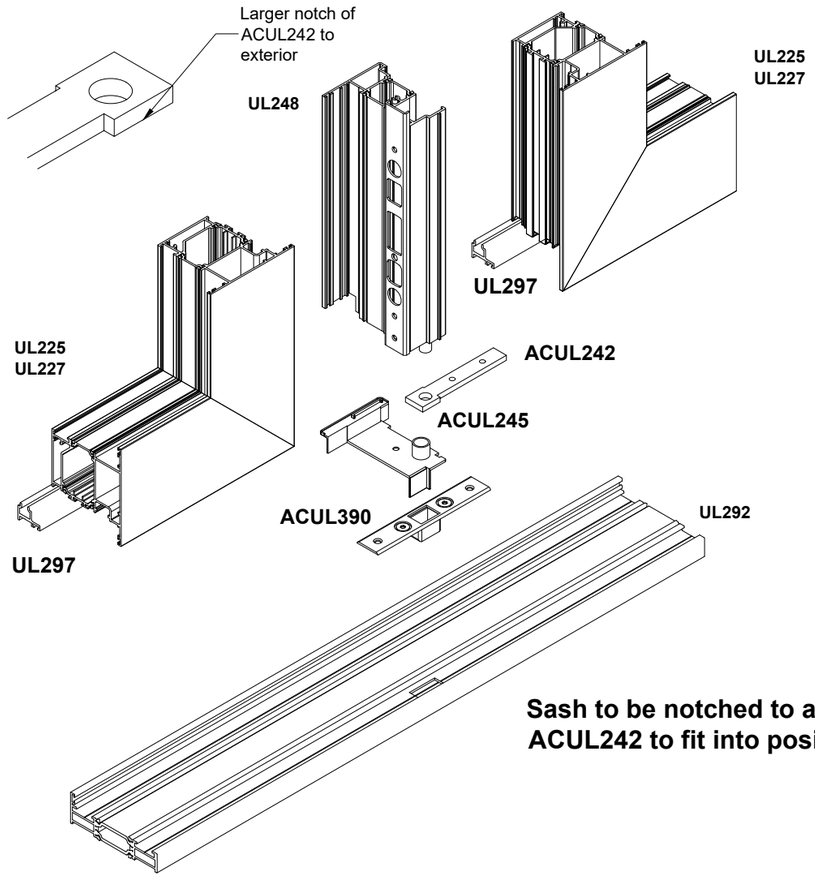

Sash to be notched to allow ACUL242 to fit into position

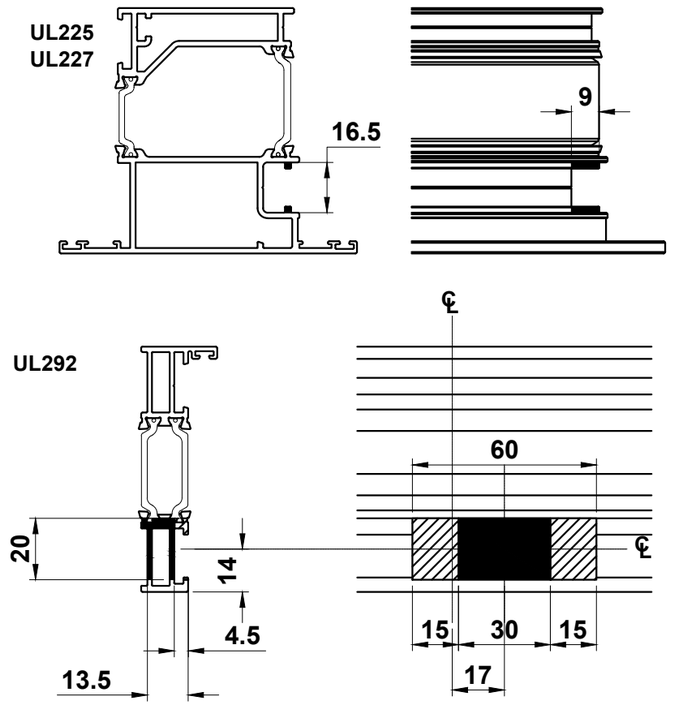

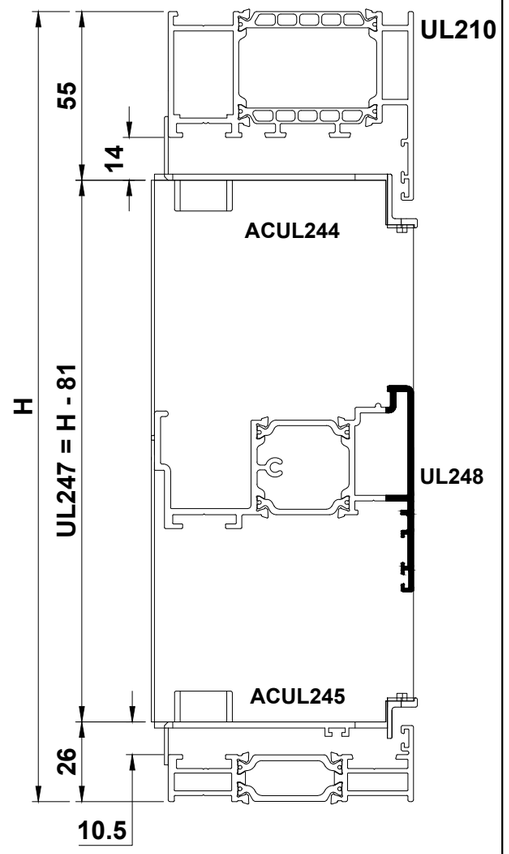

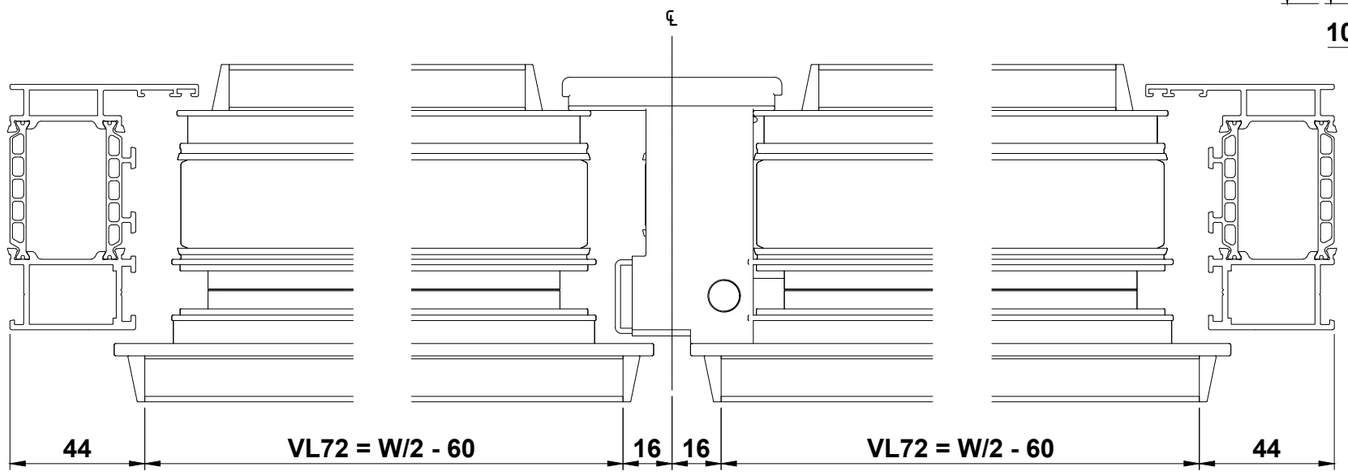

Note: All routing on outer frame require sealant to stop water leakage

Do Not Scale From This Drawing

Double Door Finger Bolt Meeting Stile Assembly - Low Rebated Threshold

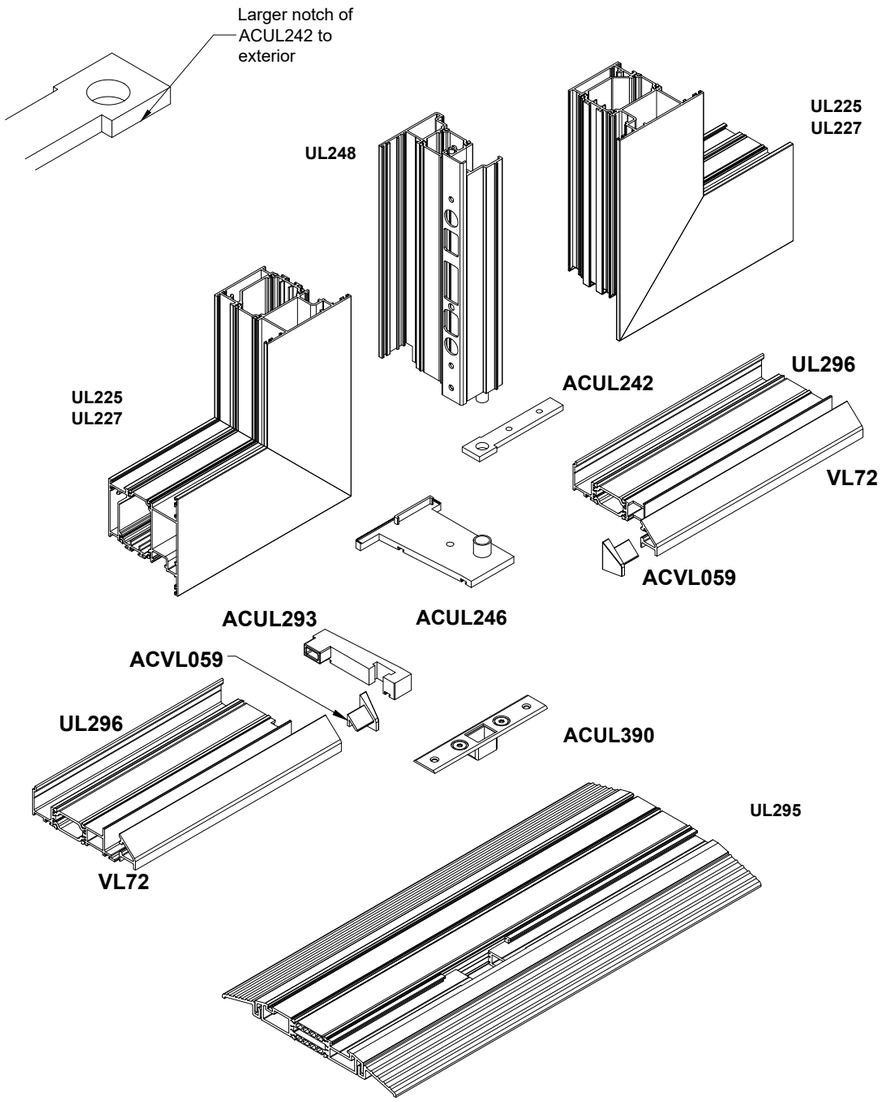

Note: All routing on outer frame require sealant to stop water leakage

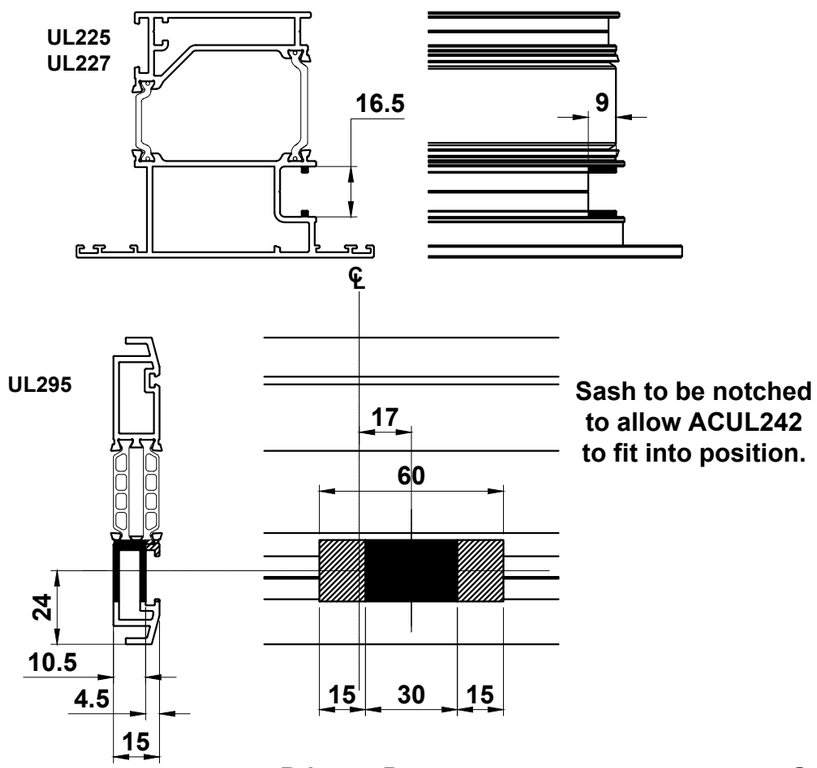

Sash to be notched to allow ACUL242 to fit into position.

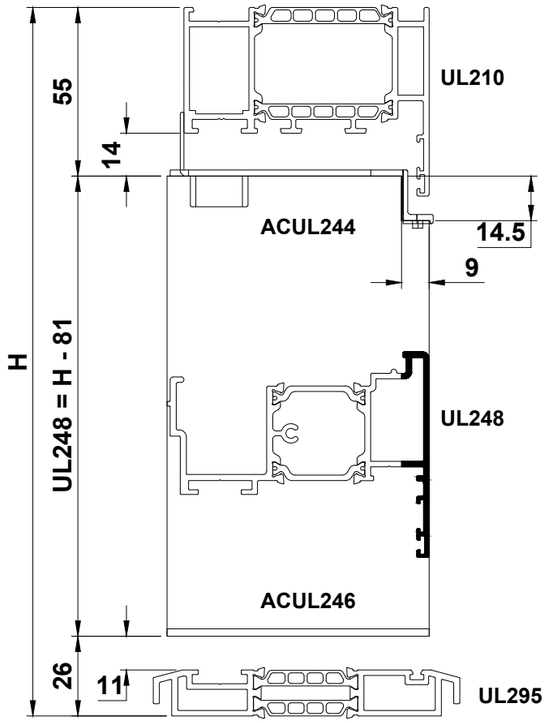

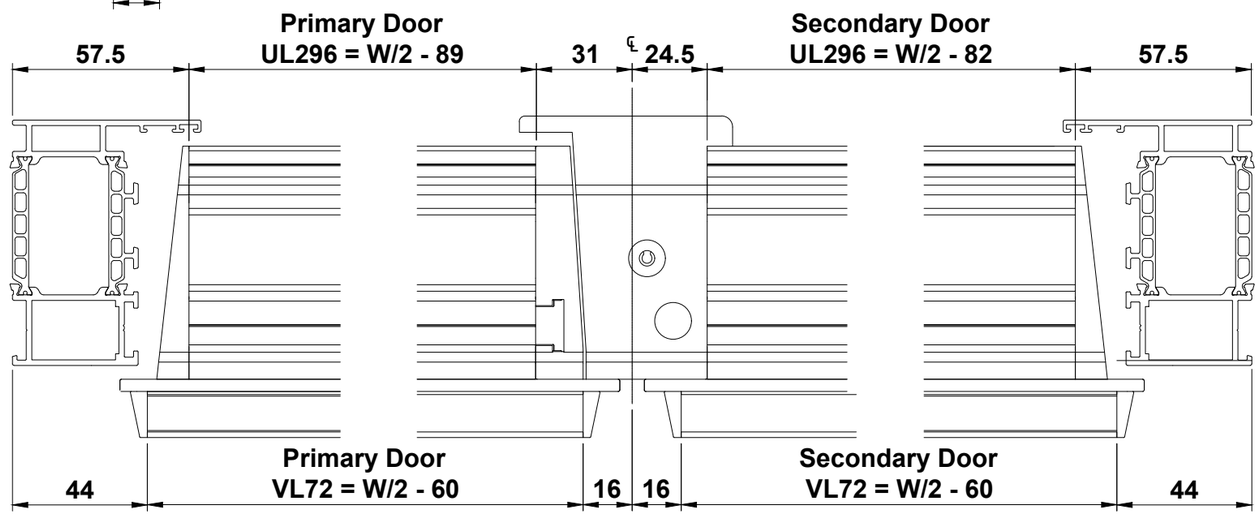

Do Not Scale From This Drawing

Glazing Chart

UL210

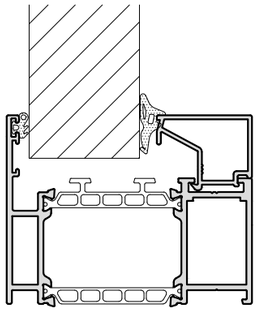

Glazing Chart: UL210			
Glass Thickness	External Gasket	Internal Gasket	Bead
36	ACVG31N	ACUN036	UL078

UL204
UL225
UL230

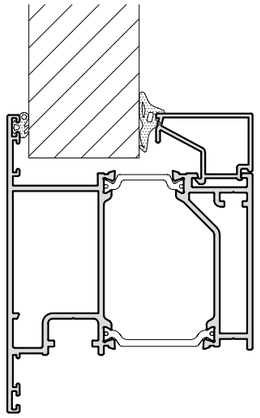

Glazing Chart: UL204 UL225 UL230			
Glass Thickness	External Gasket	Internal Gasket	Bead
24	ACVG31N	ACUN033	UL063
28	ACVG31N	ACUN033	UL064
32	ACVG31N	ACUN033	UL065
36	ACVG31N	ACUN036	UL066
40	ACVG31N	ACUN036	UL067

UL206
UL227
UL231

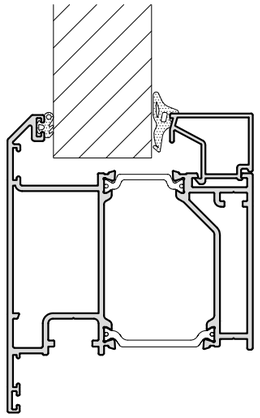

Glazing Chart: UL206 UL227 UL231			
Glass Thickness	External Gasket	Internal Gasket	Bead
24	ACVG31N	ACUN033	UL065
28	ACVG31N	ACUN036	UL066
32	ACVG31N	ACUN036	UL067
36	ACVG31N	ACUN036	UL068
40	ACVG31N	ACUN036	UL069

UL232

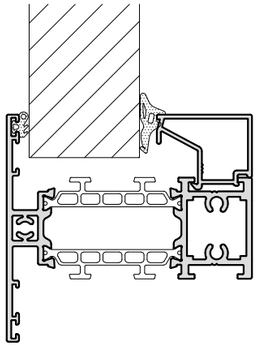

Glazing Chart: UL232			
Glass Thickness	External Gasket	Internal Gasket	Bead
36	ACVG31N	ACUN036	UL078

Do Not Scale From This Drawing

Panel Door Details

We offer a range of designs in panel doors from traditional Victorian, Georgian and Edwardian designs to contemporary chic. Here are just a select few we can offer:

PM002P

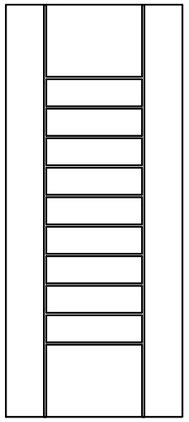

PM009T

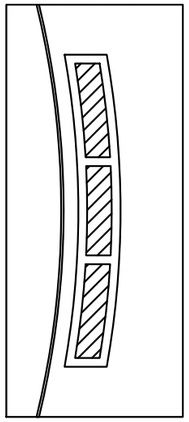

PM003P

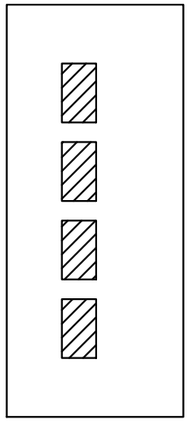

PM0015P

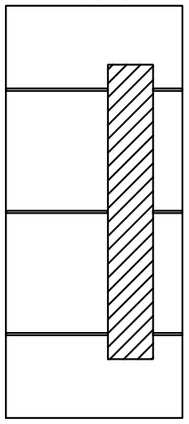

PM0017P

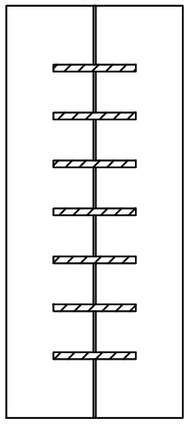

PM001P

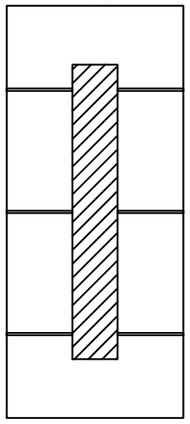

For more information and panel designs please visit our website, www.smartsystems.co.uk or call our sales team on 01934 876100.

An overall U-value of 1.2 W/m²K may be achieved by specifying glaze-in panels. Below are the centre pane U-values and overall U-values of the examples shown:

40mm Panel Thickness

Panel Number	CP U-Value (W/m2K)	Door U-Value (W/m2K)
PM002P	0.8	1.1
PM009T	0.9	1.2
PM003P	0.9	1.2
PM0015P	0.9	1.2
PM0017P	0.9	1.2
PM001P	0.9	1.2

32mm Panel Thickness

Panel Number	CP U-Value (W/m2K)	Door U-Value (W/m2K)
PM002P	1.0	1.3
PM009T	1.1	1.3
PM003P	1.1	1.3
PM0015P	1.1	1.3
PM0017P	1.1	1.3
PM001P	1.1	1.3

28mm Panel Thickness

Panel Number	CP U-Value (W/m2K)	Door U-Value (W/m2K)
PM002P	1.1	1.3
PM009T	1.2	1.4
PM003P	1.2	1.4
PM0015P	1.2	1.4
PM0017P	1.2	1.4
PM001P	1.2	1.4

Letter Plate Fitting

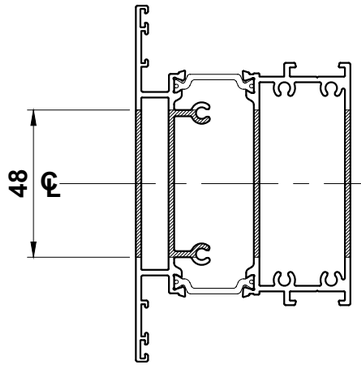

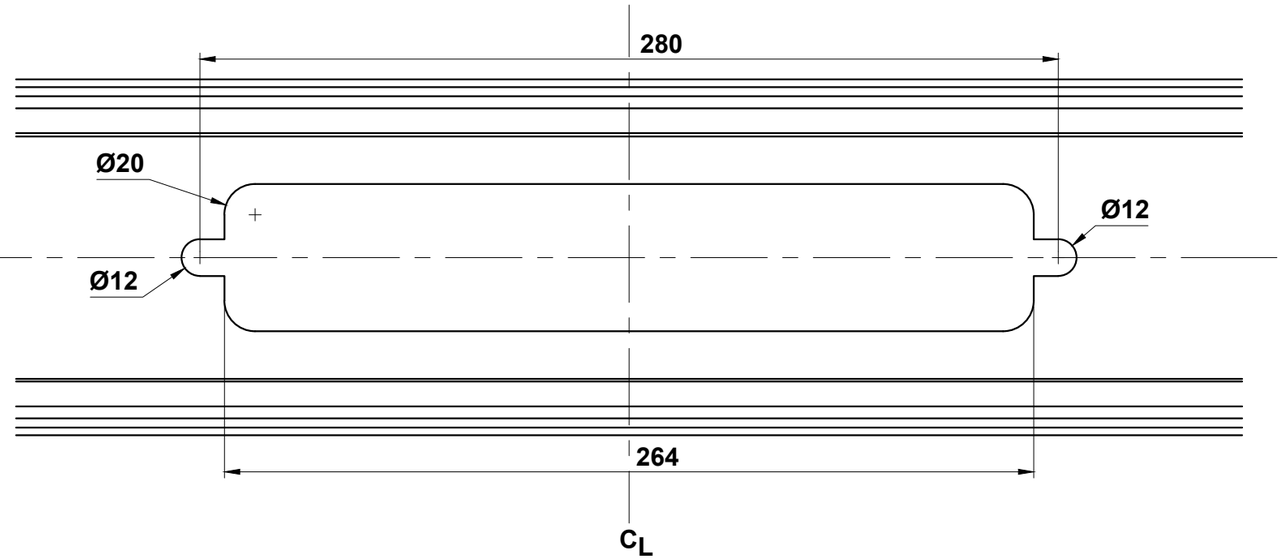

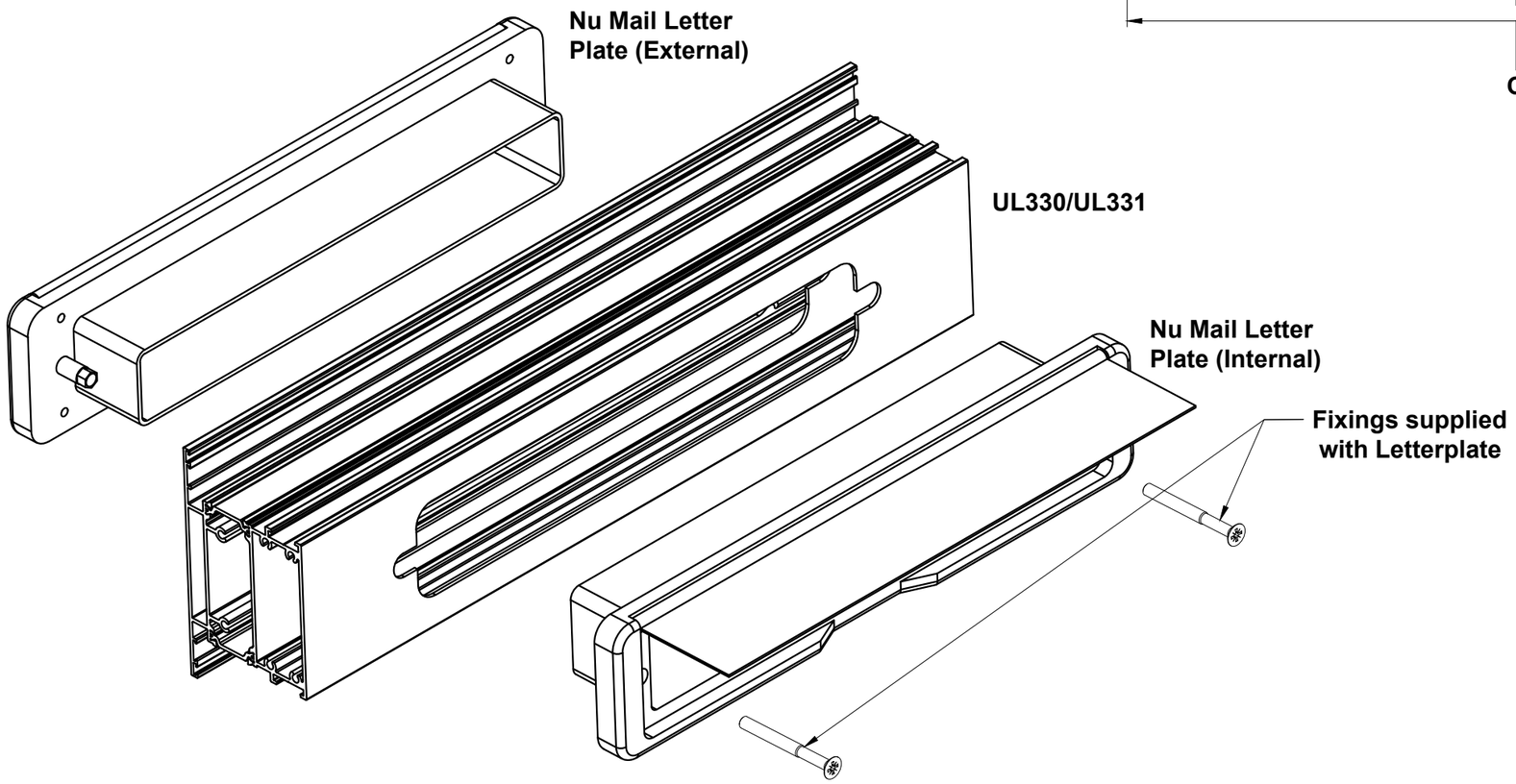

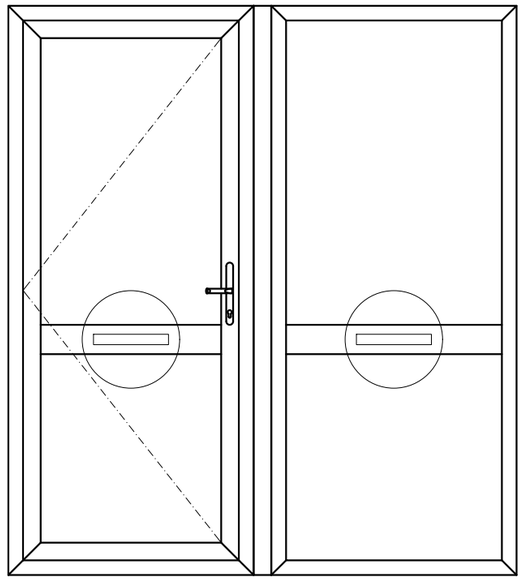

Do Not Scale From This Drawing

Fixing Strap Detail

Note:
Fixing straps should be spaced a minimum of 150mm in from each end & at a maximum of 300mm apart.
If using a cill i.e ETC452, please use ACUL232, ACUL233 or ACUL234 fixing strap.

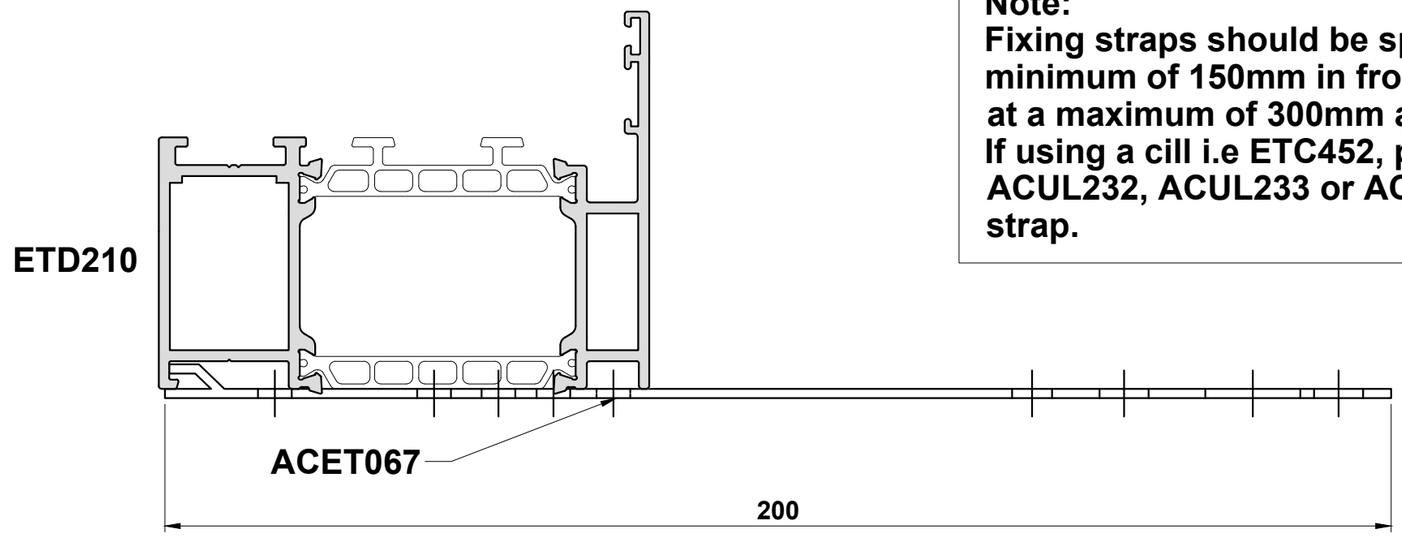

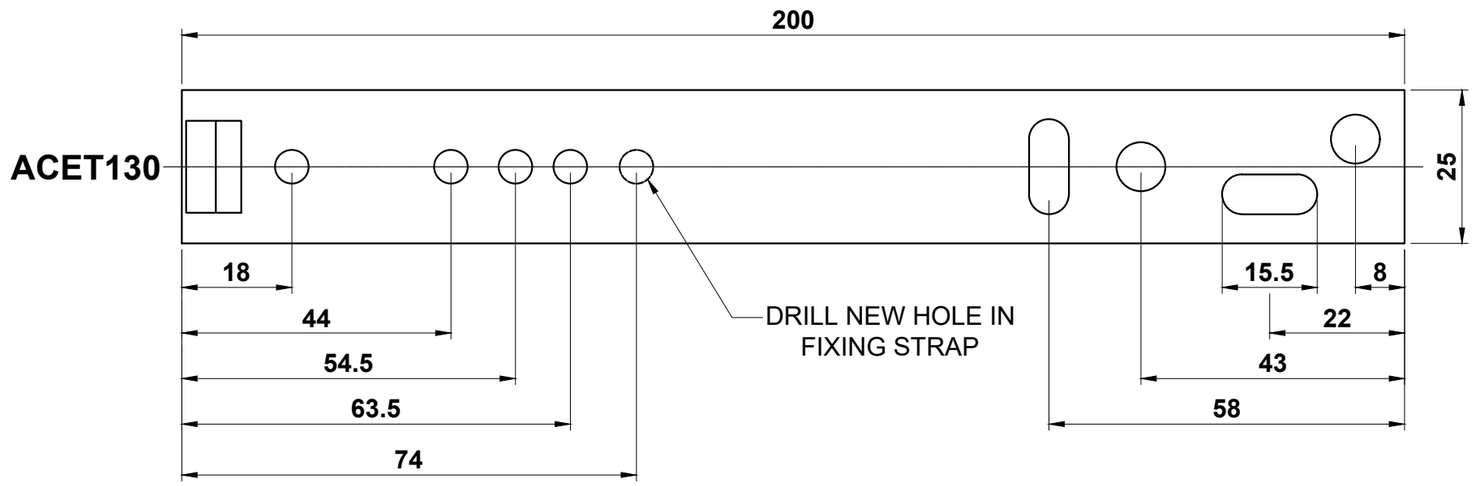

Example Layout

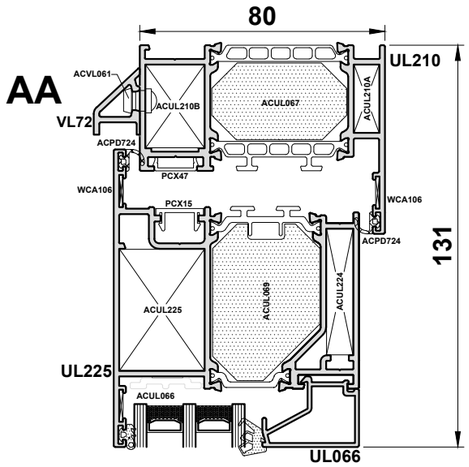

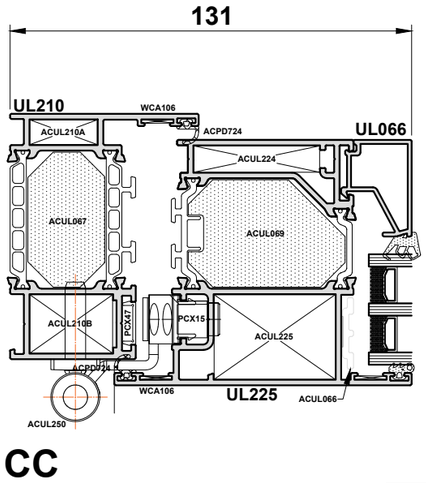

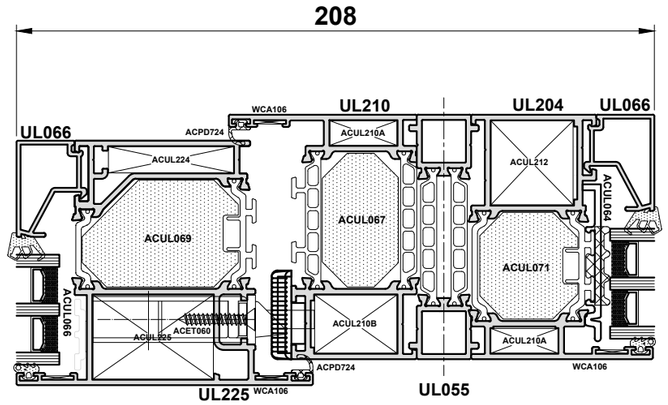

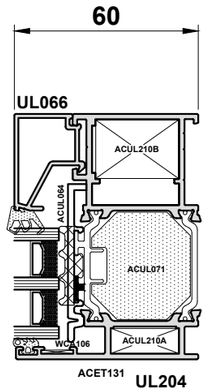

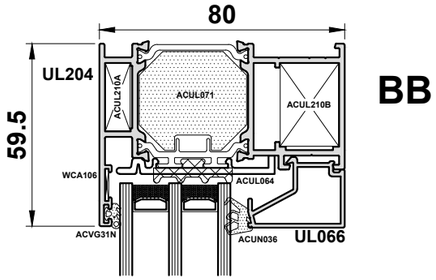

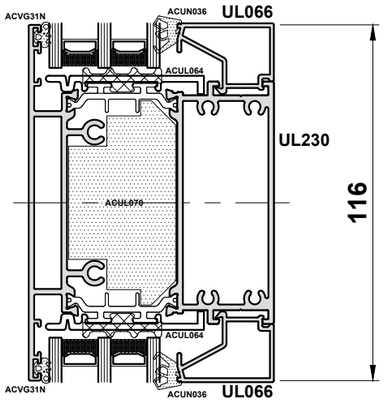

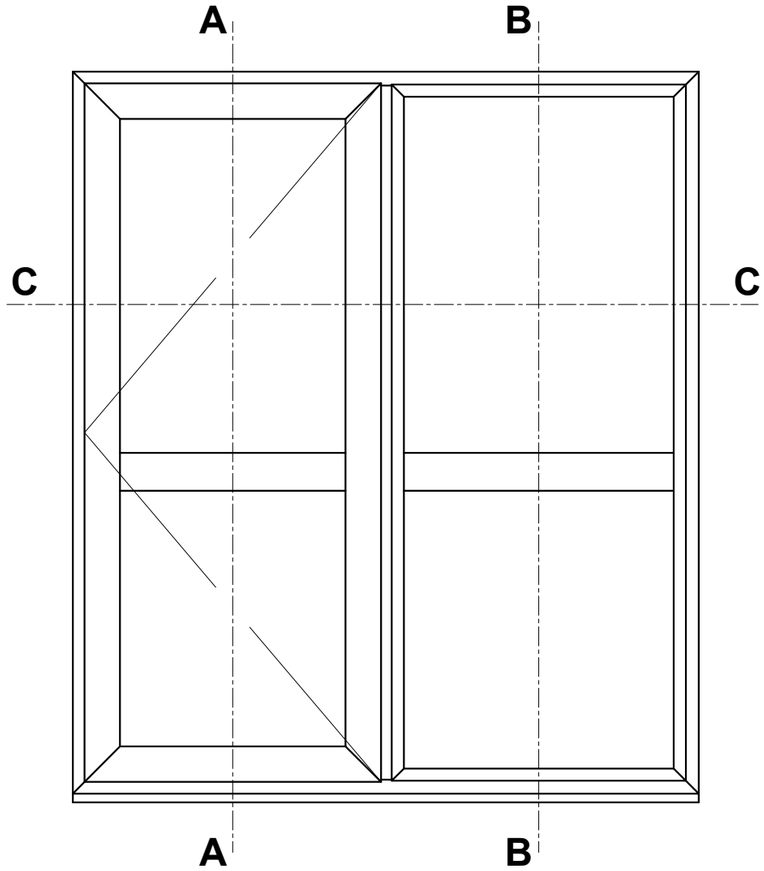

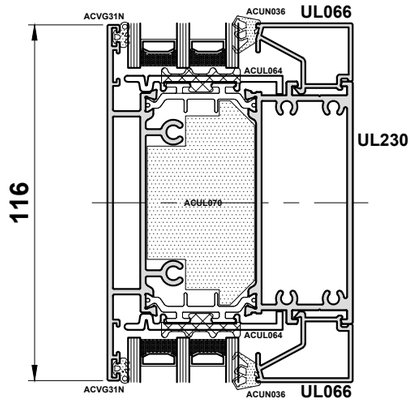

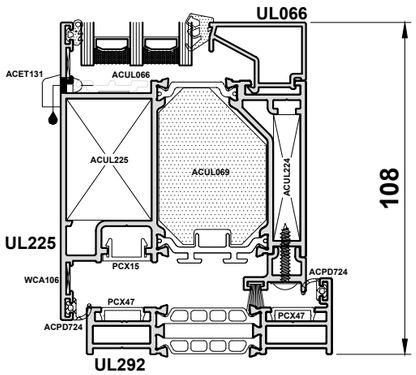

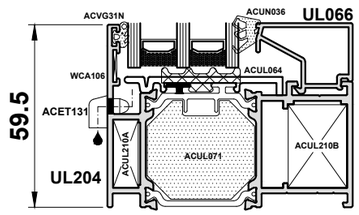

Do Not Scale From This Drawing

Section F

F UL

Sawing Tables

Section F

Open In Single Door with Low Rebate Threshold

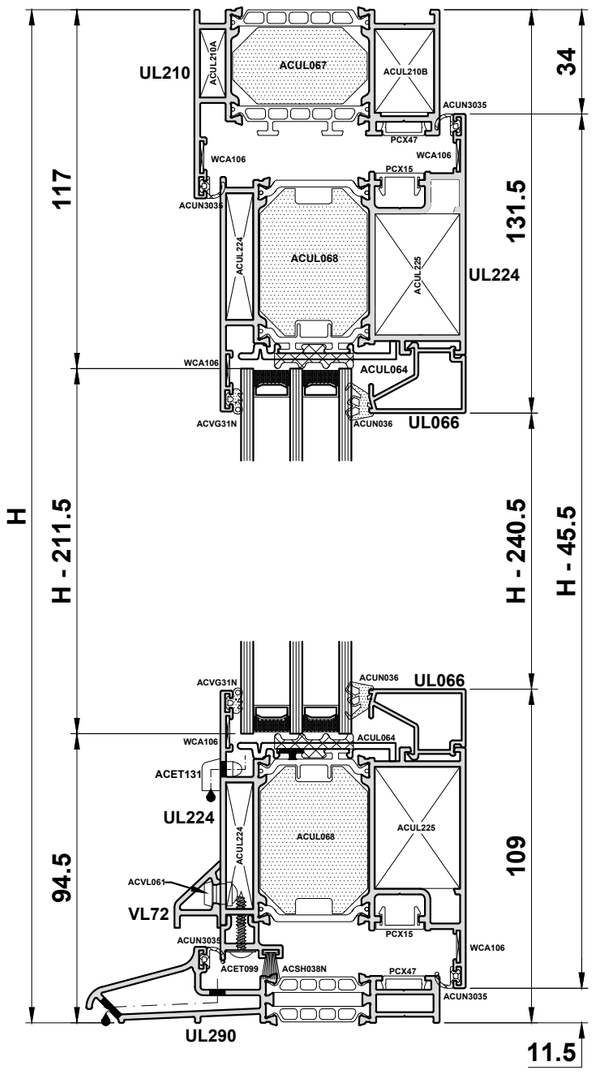

PROFILE CUTTING SCHEDULE

UL210	2		H - 15.5
UL210	1		W
UL224	2		H - 45.5
UL224	2		W - 68
UL290	1		W
UL297	1		W-116
BEAD	2		H - 240.5
BEAD	2		W - 225
PCX15	2		H - 83
PCX15	2		W - 106
PCX47	2		H - 56
PCX47	2		W - 82
VL72	1		W - 137
UL230/1	1		W - 225

GLASS SIZES

Without Midrail	W - 234	H - 211.5
With Midrail G1	W - 234	H1 - 161
With Midrail G2	W - 234	H2 - 138.5

ACCESSORIES

ACCY3570S3	1	Euro Cylinder
ACDV251	Pair	Handles
ACUN3035	4 x W & 4 x H	Flipper Gasket
ACSH038N	1 x W-95	Woolpile
ACUL064	4 (+4 if using midrail)	Glass Packers
ACUL067	1 x W & 2 x H	Outer Frame Foam
ACUL068	2 x W & 2 x H	Sash Foam
ACUL210A	2	Outer Frame Cleat
ACUL210B	2	Outer Frame Cleat
ACUL224	4	Sash Cleat
ACUL225	4	Sash Cleat
ACUL250	3	Hinge
ACUL272/3	1	Primary Lock
ACUL290	1 Pair	UL290 End Cap
ACUL295	2	Low Threshold Bracket
ACUL297	1 Pair	UL297 End Cap
ACUN036	2 x W & 2 x H	Wedge Gasket
ACVG31N	2 x W & 2 x H	E Gasket
ACVL059	1 Pair	VL72 End Cap
ACVL061	2(W/300)	VL72 Rivet
WCA106	6	Chevrons

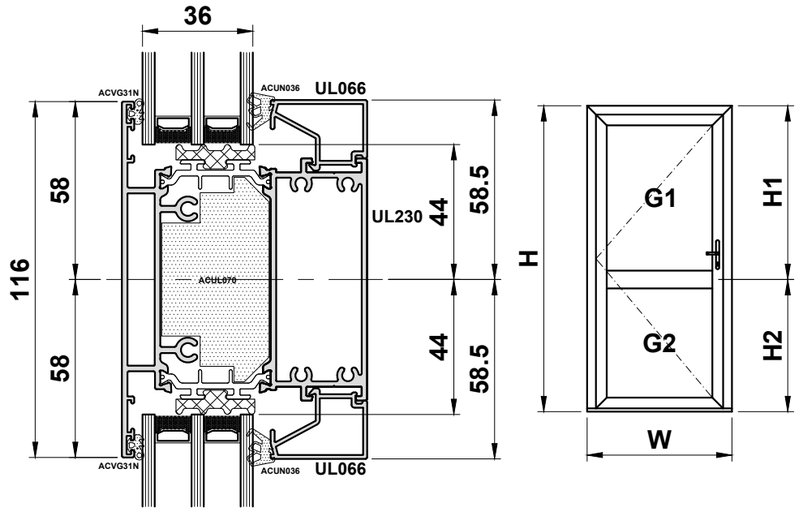

ACCESSORIES FOR MID RAIL

ACUL070	1W	UL230 Foam
ACUL299	2	Bracket
ACUN036	2W	Wedge Gasket
ACUN3512	4	Screws
ACVG31N	2W	E Gasket

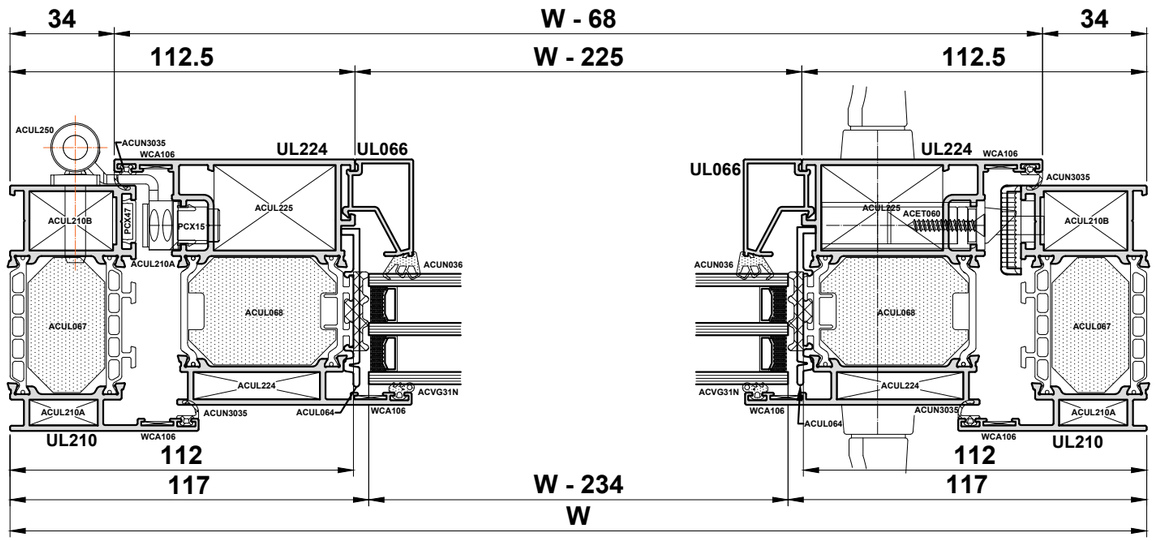

Do Not Scale From This Drawing

Open In Double Door with Low Rebate Threshold

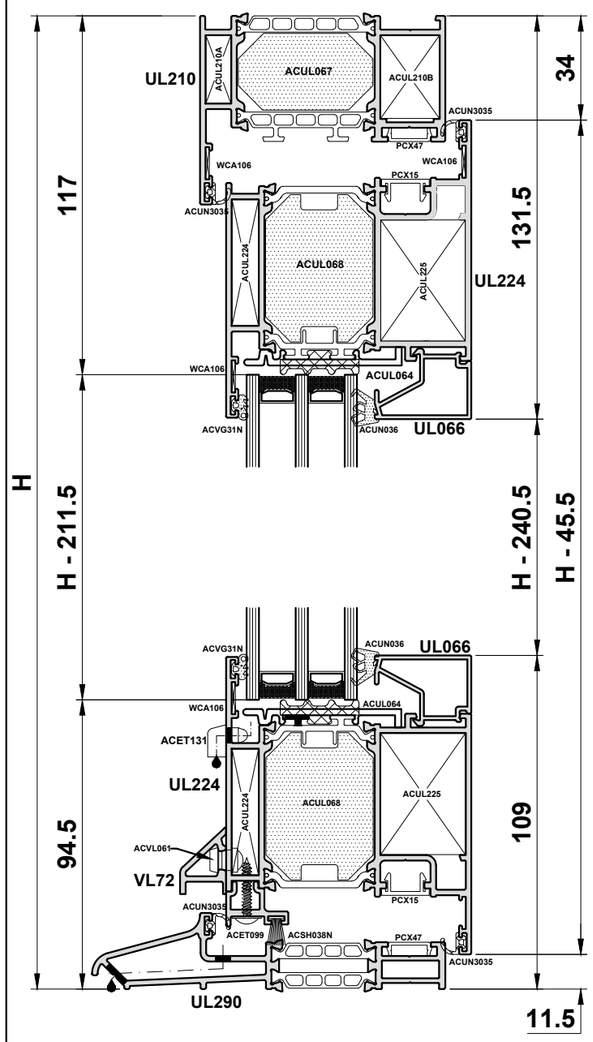

PROFILE CUTTING SCHEDULE

UL210	2		H - 15.5
UL210	1		W
UL224	4		H - 45.5
UL224	4		W/2 - 36.5
UL247	1		H - 81
UL290	1		W
UL297	1		W/2 - 84.5
UL297	1		W/2 - 81
BEAD	4		H - 240.5
BEAD	4		W/2 - 193.5
PCX15	2		H - 83
PCX15	4		W/2 - 74
PCX47	2		H - 56
PCX47	2		W - 82
VL72	2		W/2 - 110.5
UL230/1	2		W/2 -197

GLASS SIZES

Without Midrail	W/2 - 202.5	H - 211.5
Without Midrail G1	W/2 - 202.5	H1 - 161
Without Midrail G2	W/2 - 202.5	H2 - 138.5

ACCESSORIES

ACCY3570S3	2	Euro Cylinder
ACDV251	2 Pairs	Handles
ACUN3035	4 x W & 7 x H	Flipper Gasket
ACSH038N	1 x W	Woolpile
ACUL064	8 (+8 if using midrail)	Glass Packers
ACUL067	1 x W & 2 x H	Outer Frame Foam
ACUL068	2 x W & 4 x H	Sash Foam
ACUL210A	2	Outer Frame Cleat
ACUL210B	2	Outer Frame Cleat
ACUL224	8	Sash Cleat
ACUL225	8	Sash Cleat
ACUL247	1	UL247 End Cap
ACUL248	1	UL247 End Cap
ACUL250	6	Hinge
ACUL277/8	1	Primary Lock
ACUL279	1	Secondary Lock
ACUL290	1 Pair	UL290 End Cap
ACUL295	2	Low Threshold Bracket
ACUL297	2 Pairs	UL297 End Cap
ACUN036	2 x W & 4 x H	Wedge Gasket
ACVG31N	2 x W & 4 x H	E Gasket
ACVL059	2 Pairs	VL72 End Cap
ACVL061	4(W/300)	VL72 Rivet
WCA106	14	Chevrons

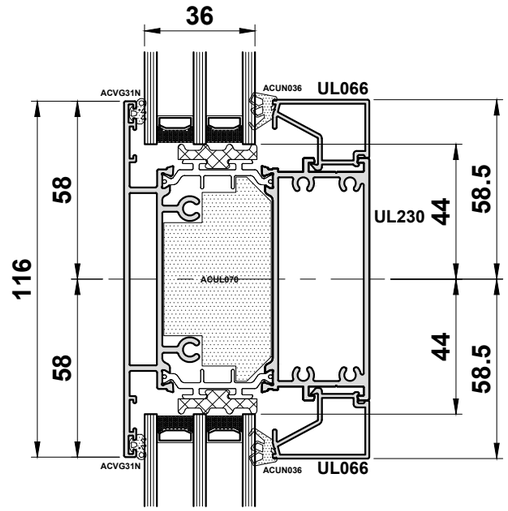

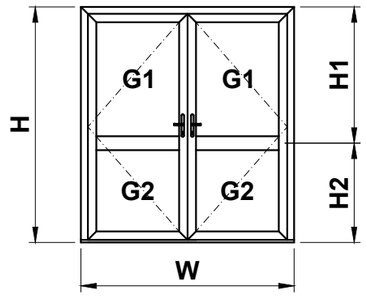

ACCESSORIES FOR MID RAIL

ACUL070	1W	UL230 Foam
ACUL299	4	Bracket
ACUN036	2W	Wedge Gasket
ACUN3512	8	Screws
ACVG31N	2W	E Gasket

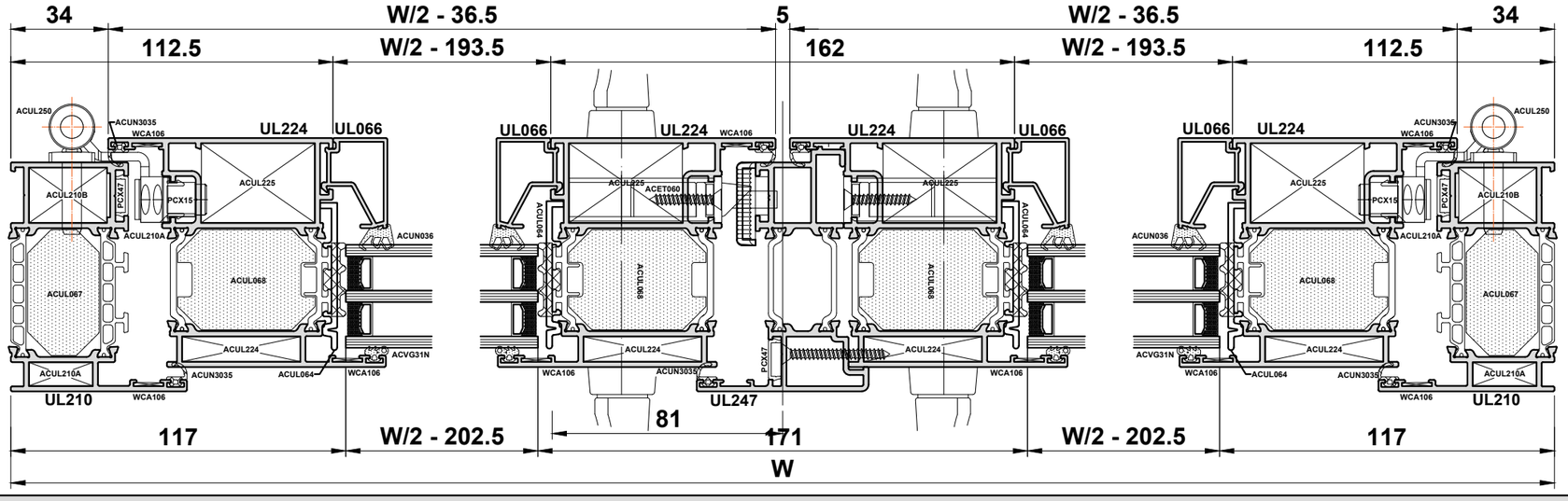

Do Not Scale From This Drawing

Open In Single Door with Low Ramp Threshold

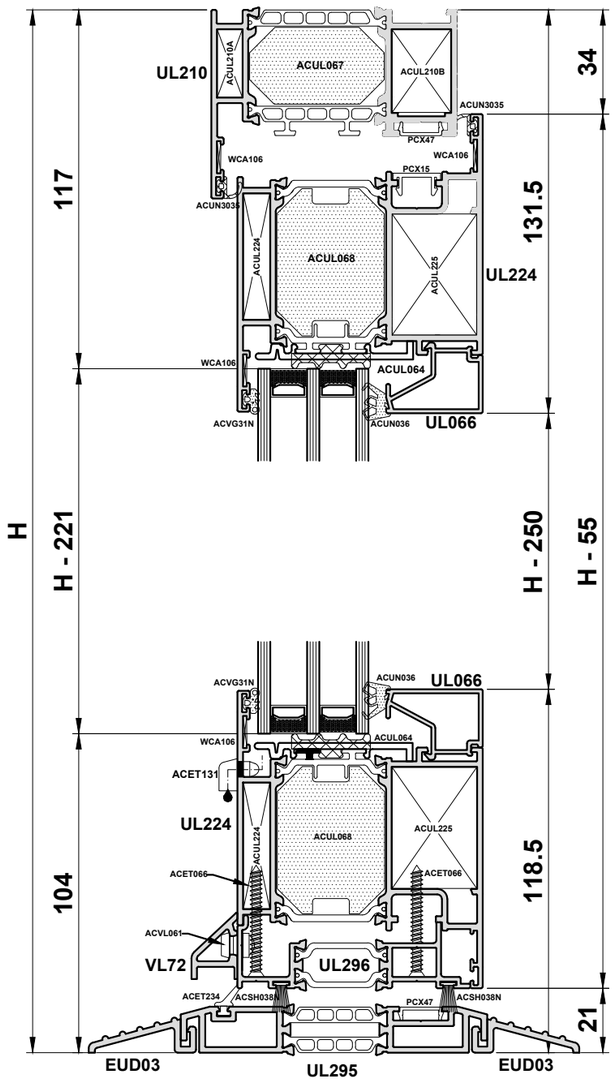

PROFILE CUTTING SCHEDULE

EUD03	2		W
UL210	2		H - 15.5
UL210	1		W
UL224	2		H - 55
UL224	2		W - 68
UL295	1		W
UL296	1		W - 115
BEAD	2		H - 250
BEAD	2		W - 225
PCX15	1		H - 93
PCX15	2		W - 106
PCX47	2		H - 56
PCX47	2		W - 82
VL72	1		W - 137
UL230/1	1		W - 225

GLASS SIZES

Without Midrail	W - 234	H - 221
With Midrail G1	W - 234	H2 - 161
With Midrail G2	W - 234	H1 - 148.5

ACCESSORIES

ACCY3570S3	1	Euro Cylinder
ACDV251	1 Pair	Handles
ACET234	1 x W	Threshold Gasket
ACUN3035	2 x W & 4 x H	Flipper Gasket
ACSH038N	2 x W	Woolpile
ACUL064	4 (+4 if using Midrail)	Glass Packers
ACUL067	1 x W & 2 x H	Outer Frame Foam
ACUL068	2 x W & 2 x H	Sash Foam
ACUL210A	2	Outer Frame Cleat
ACUL210B	2	Outer Frame Cleat
ACUL224	4	Sash Cleat
ACUL225	4	Sash Cleat
ACUL250	3	Hinge
ACUL272/3	1	Primary Lock
ACUL294	1 Pair	UL295 End Cap
ACUL296	1 Pair	UL296 End Cap
ACUL295	2	Low Threshold Bracket
ACUN036	2 x W & 2 x H	Wedge Gasket
ACVG31N	2 x W & 2 x H	E Gasket
ACVL059	1 Pair	VL72 End Cap
ACVL061	2(W/300)	VL72 Rivet
WCA106	6	Chevrons

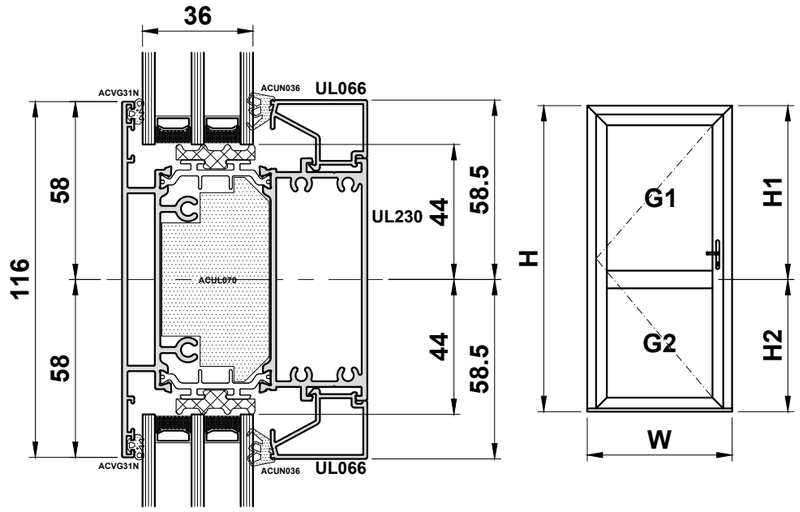

ACCESSORIES FOR MID RAIL

ACUL070	1W	UL230 Foam
ACUL299	2	Bracket
ACUN036	2W	Wedge Gasket
ACUN3512	4	Screws
ACVG31N	2W	E Gasket

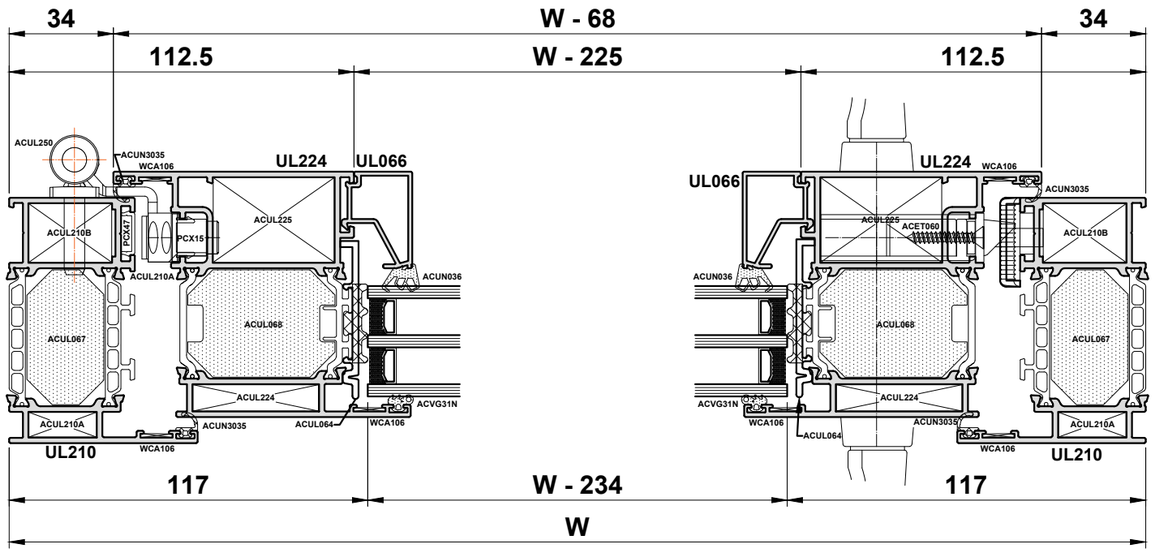

Do Not Scale From This Drawing

Open In Double Door with Low Ramp Threshold

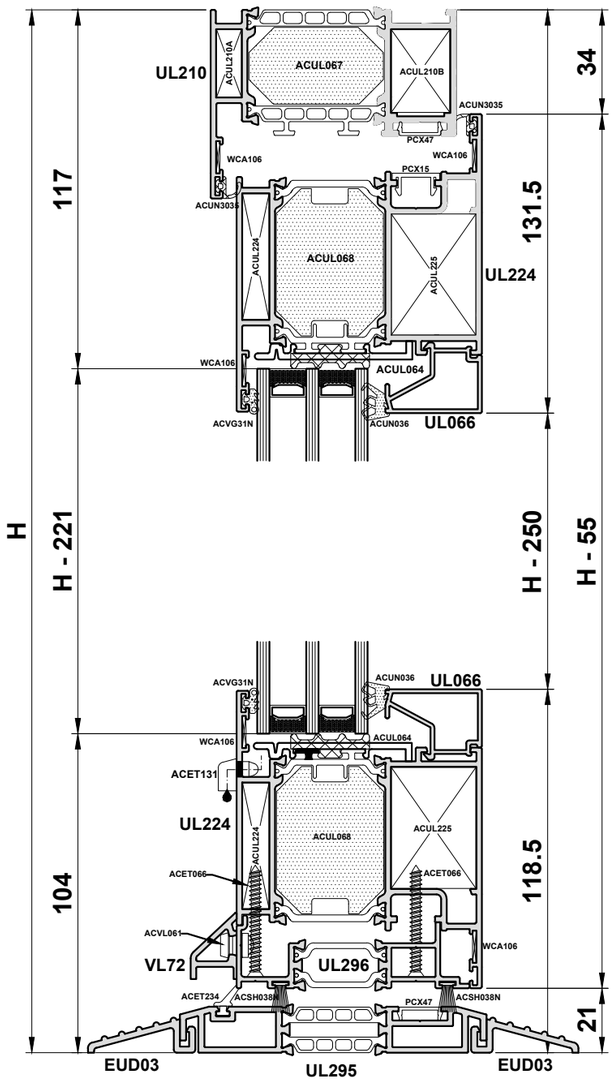

PROFILE CUTTING SCHEDULE

EUD03	2		W
UL210	2		H - 15.5
UL210	1		W
UL224	4		H - 55
UL224	4		W/2 - 36.5
UL247	1		H - 81
UL295	1		W
UL296	1		W/2 - 89
UL296	1		W/2 - 82
BEAD	4		H - 250
BEAD	4		W/2 - 193.5
PCX15	1		H - 53.5
PCX15	3		W/2 - 106
PCX47	2		H - 56
PCX47	2		W/2 - 82
VL72	2		W/2 - 108.5
UL230/1	2		W/2 - 197

GLASS SIZES

Without Midrail	W/2 - 202.5	H - 221
With Midrail G1	W/2 - 202.5	H2 - 161
With Midrail G2	W/2 - 202.5	H1 - 148.5

ACCESSORIES

ACCY3570S3	2	Euro Cylinder
ACDV251	2 Pairs	Handles
ACET234	1 x W	Threshold Gasket
ACUN3035	2 x W & 7 x H	Flipper Gasket
ACSH038N	2 x W	Woolpile
ACUL064	8 (+8 if using midrail)	Glass Packers
ACUL067	1 x W & 2 x H	Outer Frame Foam
ACUL068	2 x W & 4 x H	Sash Foam
ACUL210A	2	Outer Frame Cleat
ACUL210B	2	Outer Frame Cleat
ACUL224	8	Sash Cleat
ACUL225	8	Sash Cleat
ACUL247	1	UL247 End Cap
ACUL249	1	UL247 End Cap
ACUL250	6	Hinge
ACUL277/8	1	Primary Lock
ACUL279	1	Secondary Lock
ACUL293	1 Pair	UL296 End Cap
ACUL294	1 Pair	UL295 End Cap
ACUL295	2	Low Threshold Bracket
ACUL296	1 Pair	End Cap
ACUN036	2 x W & 4 x H	Wedge Gasket
ACVG31N	2 x W & 4 x H	E Gasket
ACVL059	2 Pairs	VL72 End Cap
ACVL061	4(W/300)	VL72 Rivet
WCA106	18	Chevrons

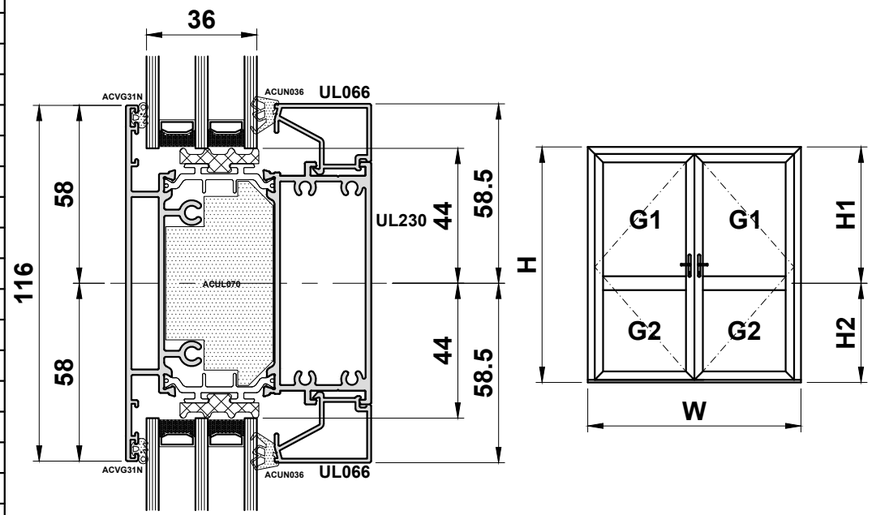

ACCESSORIES FOR MID RAIL

ACUL070	1W	UL230 Foam
ACUL299	4	Bracket
ACUN036	2W	Wedge Gasket
ACUN3512	8	Screws
ACVG31N	2W	E Gasket

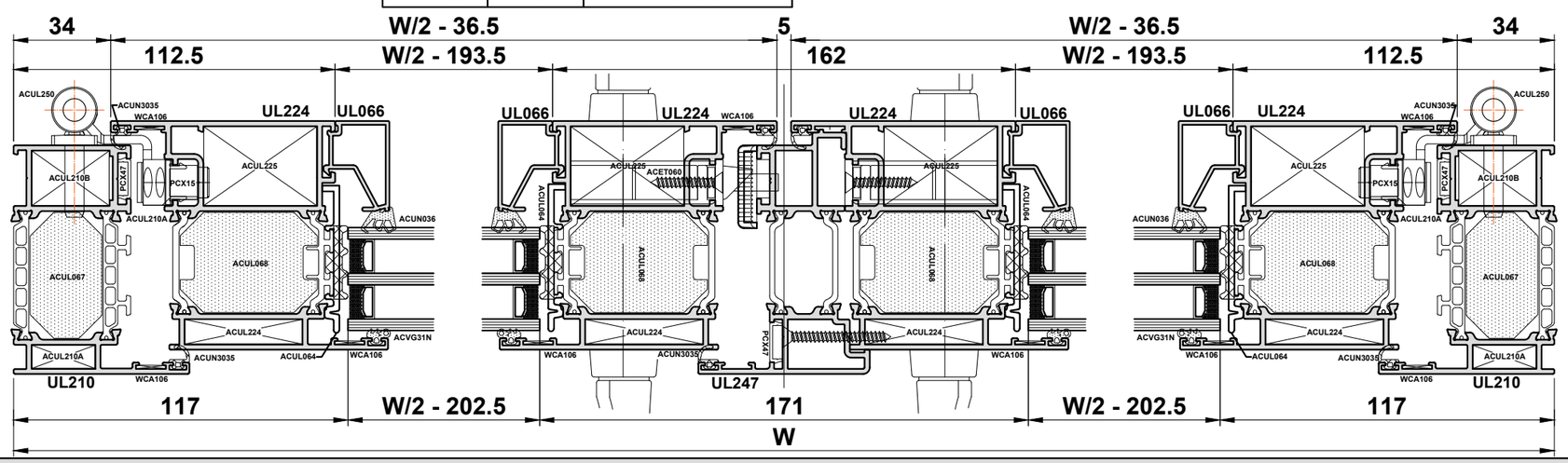

Do Not Scale From This Drawing

Open In Single Door with Full Frame

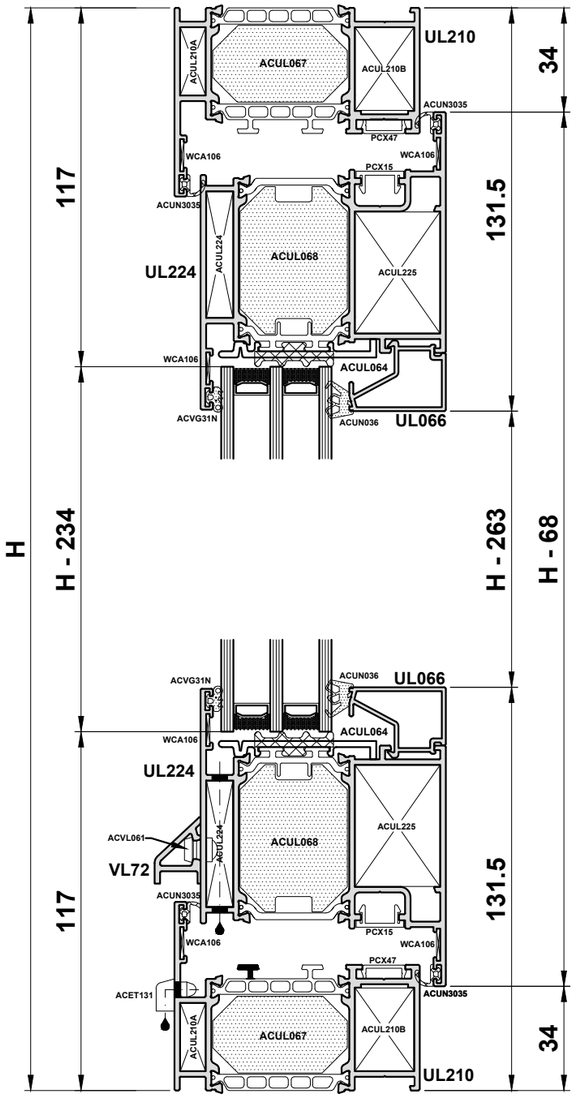

PROFILE CUTTING SCHEDULE

UL210	2		H
UL210	2		W
UL224	2		H - 68
UL224	2		W - 68
BEAD	2		H - 263
BEAD	2		W - 225
PCX15	2		H - 106
PCX15	2		W - 106
PCX47	2		H - 82
PCX47	2		W - 82
VL72	1		W - 137
UL230/1	1		W - 225

GLASS SIZES

Without Midrail	W - 234	H - 234
With Midrail G1	W - 234	H1 - 161
With Midrail G2	W - 234	H2 - 161

ACCESSORIES

ACCY3570S3	1	Euro Cylinder
ACDV251	1 Pair	Handles
ACET131	2	Drainage Cap
ACUN3035	4 x W & 4 x H	Flipper Gasket
ACUL064	4 (+4 is using midrail)	Glass Packers
ACUL067	2 x W & 2 x H	Outer Frame Foam
ACUL068	2 x W & 2 x H	Sash Foam
ACUL210A	4	Outer Frame Cleat
ACUL210B	4	Outer Frame Cleat
ACUL224	4	Sash Cleat
ACUL225	4	Sash Cleat
ACUL250	3	Hinge
ACUL272/3	1	Primary Lock
ACUN036	2 x W & 2 x H	Wedge Gasket
ACVG31N	2 x W & 2 x H	E Gasket
ACVL059	1 Pair	VL72 End Cap
ACVL061	2(W/300)	VL72 Rivet
WCA106	8	Chevrons

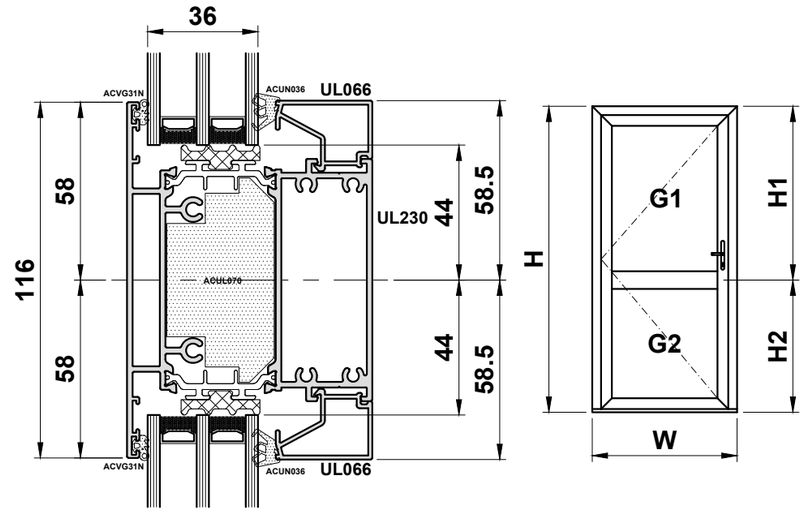

ACCESSORIES FOR MID RAIL

ACUL070	1W	UL230 Foam
ACUL299	2	Bracket
ACUN036	2W	Wedge Gasket
ACUN3512	4	Screws
ACVG31N	2W	E Gasket

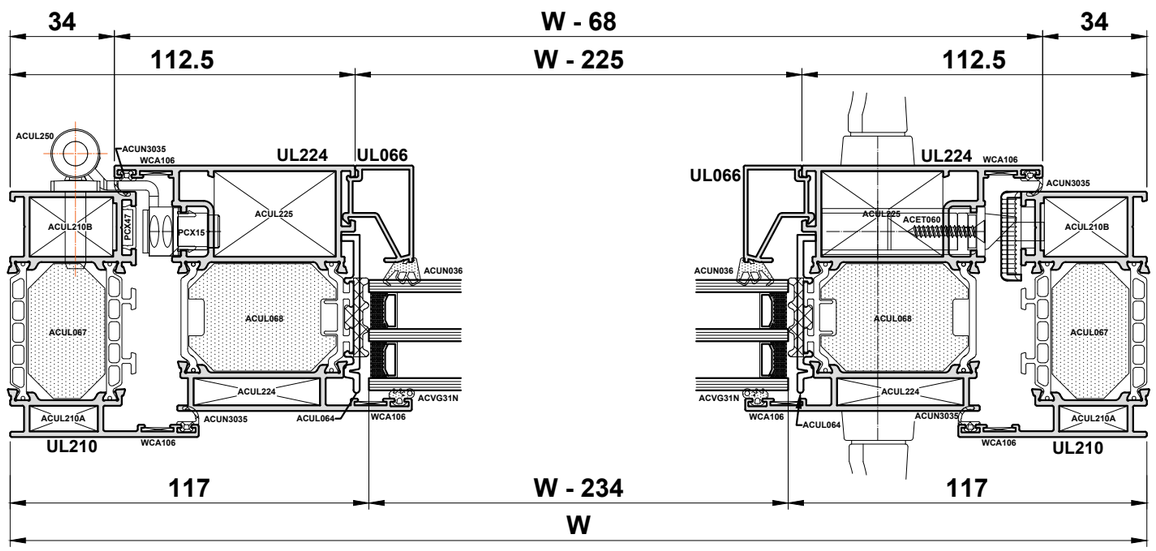

Do Not Scale From This Drawing

Open In Double Door with Full Frame

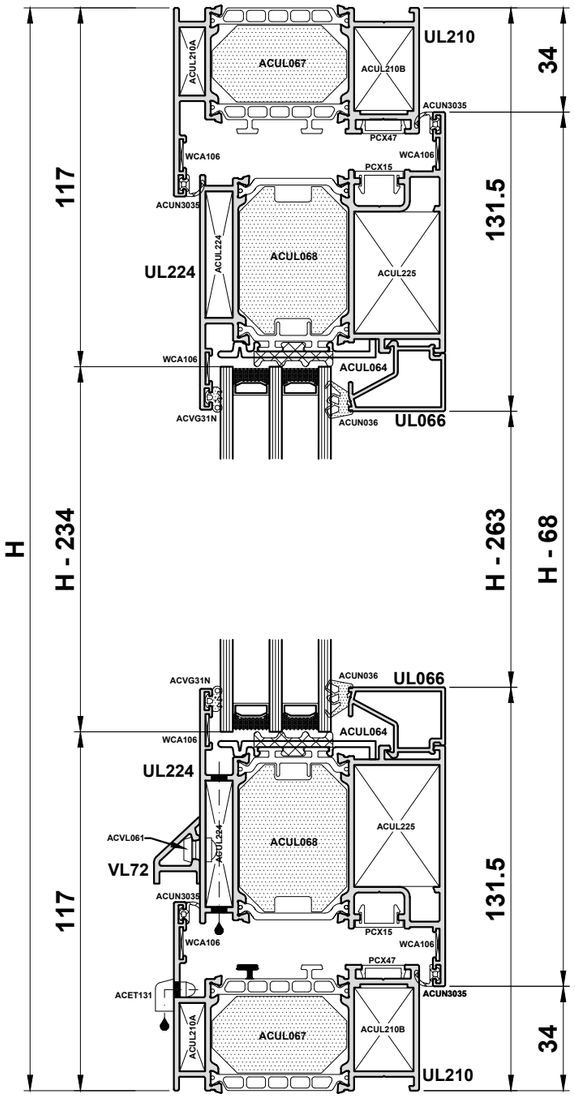

PROFILE CUTTING SCHEDULE

UL210	2		H
UL210	2		W
UL224	4		H - 68
UL224	4		W/2 - 36.5
UL247	1		H - 110
BEAD	4		H - 263
BEAD	4		W/2 - 193.5
PCX15	2		H - 106
PCX15	4		W/2 - 74
PCX47	2		H - 82
PCX47	3		W - 82
VL72	2		W/2 - 105.5
UL230/1	2		W/2 - 197

GLASS SIZES

Without Midrail	W/2 - 202.5	H - 234
With Midrail G1	W/2 - 202.5	H1 - 161
With Midrail G2	W/2 - 202.5	H2 - 161

ACCESSORIES

ACCY3570S3	2	Euro Cylinder
ACDV251	2 Pairs	Handles
ACET131	4	Drainage Cap
ACUN3035	4 x W & 7 x H	Flipper Gasket
ACUL064	8	Glass Packers
ACUL067	2 x W & 2 x H	Outer Frame Foam
ACUL068	2 x W & 4 x H	Sash Foam
ACUL210A	4	Outer Frame Cleat
ACUL210B	4	Outer Frame Cleat
ACUL224	8	Sash Cleat
ACUL225	8	Sash Cleat
ACUL247	1 Pair	UL247 End Cap
ACUL250	6	Hinge
ACUL277/8	1	Primary Lock
ACUL279	1	Secondary Lock
ACUN036	2 x W & 4 x H	Wedge Gasket
ACVG31N	2 x W & 4 x H	E Gasket
ACVL059	2 Pairs	VL72 End Cap
ACVL061	4(W/300)	VL72 Rivet
WCA106	24	Chevrons

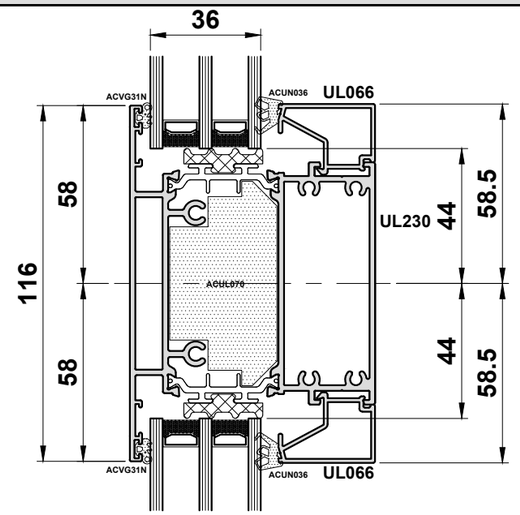

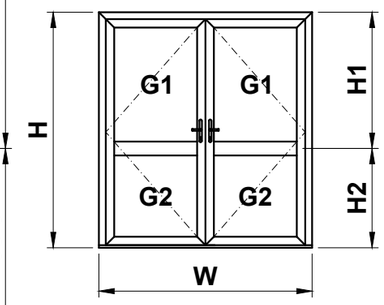

ACCESSORIES FOR MID RAIL

ACUL070	1W	UL230 Foam
ACUL299	4	Bracket
ACUN036	2W	Wedge Gasket
ACUN3512	8	Screws
ACVG31N	2W	E Gasket

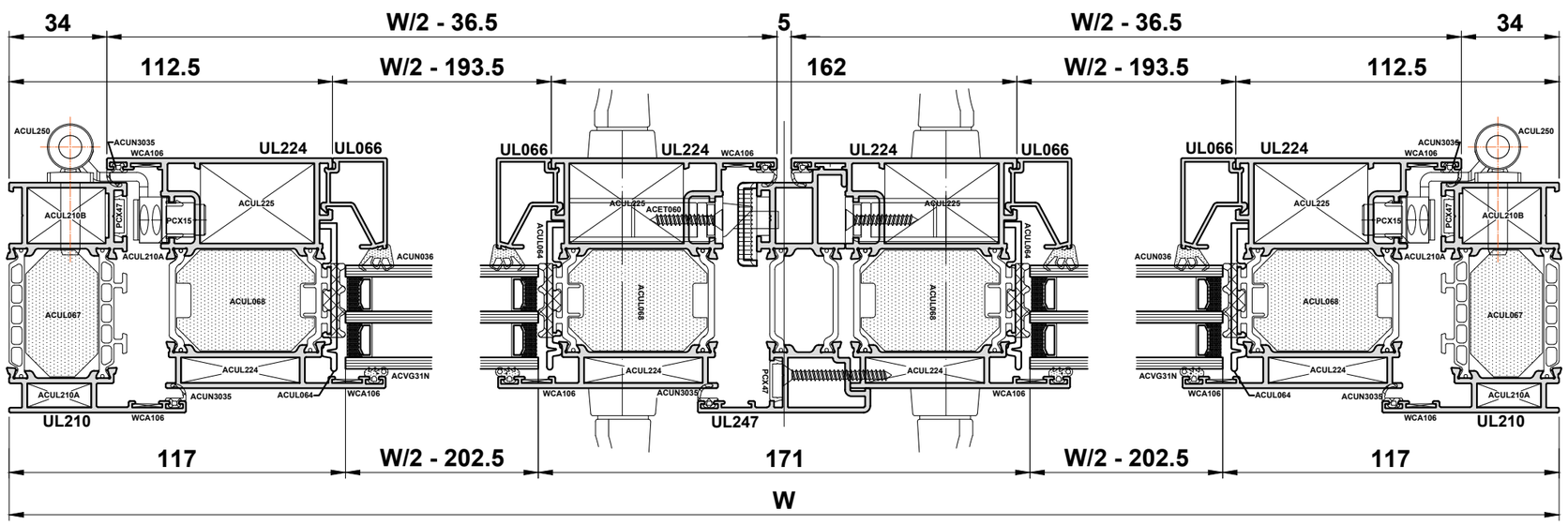

Do Not Scale From This Drawing

Open In Double Door with Low Rebate Threshold - Fingerbolt

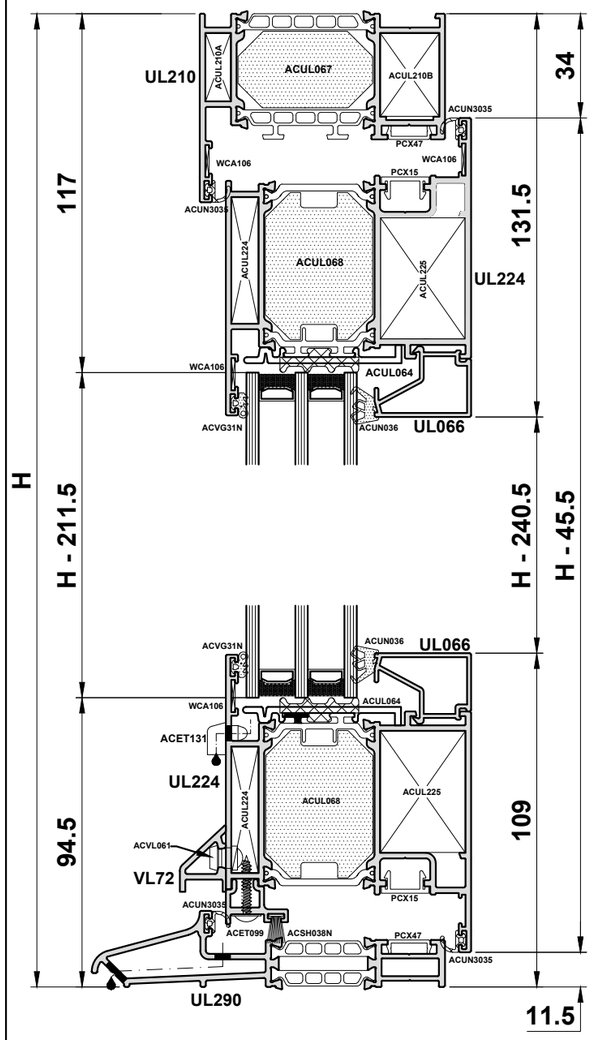

PROFILE CUTTING SCHEDULE

UL210	2		H - 15.5
UL210	1		W
UL224	4		H - 45.5
UL224	4		W/2 - 40
UL248	1		H - 81
UL290	1		W
UL297	1		W/2 - 88
UL297	1		W/2 - 86
BEAD	4		H - 240.5
BEAD	4		W/2 - 197
PCX15	2		H - 83
PCX15	4		W - 74
PCX47	2		H - 56
PCX47	2		W - 82
VL72	2		W/2 - 110.5
UL230/1	2		W/2 - 197

GLASS SIZES

Without Midrail	W/2 - 206	H - 211.5
With Midrail G1	W/2 - 206.5	H1 - 161
With Midrail G2	W/2 - 206.5	H2 - 138.5

ACCESSORIES

ACCY3570S3	2	Euro Cylinder
ACDV251	2 Pairs	Handles
ACUN3035	4 x W & 6 x H	Flipper Gasket
ACSH038N	1 x W	Woolpile
ACUL064	8 (+8 if using midrail)	Glass Packers
ACUL067	1 x W & 2 x H	Outer Frame Foam
ACUL068	2 x W & 4 x H	Sash Foam
ACUL210A	2	Outer Frame Cleat
ACUL210B	2	Outer Frame Cleat
ACUL224	8	Sash Cleat
ACUL225	8	Sash Cleat
ACUL244	1	UL248 End Cap
ACUL245	1	UL248 End Cap
ACUL250	6	Hinge
ACULXXX	1	Lift Lever/ Slam / Keywind fingerbolt lock
ACUL844	1	Fingerbolt
LOCK RODS	2	Lock rods for fingerbolt
ACUL390	2	Fingerbolt Keeps
ACUL242	2	Fingerbolt Guides
ACUL290	1 Pair	UL290 End Cap
ACUL295	2	Low Threshold Bracket
ACUL297	2 Pairs	UL297 End Cap

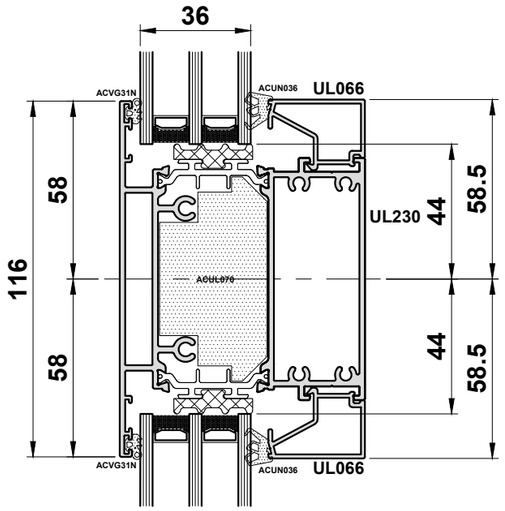

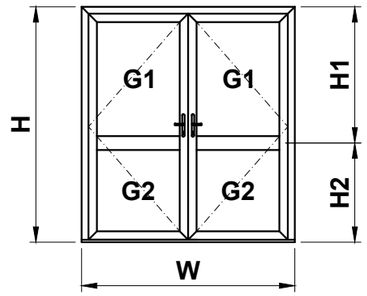

ACUN036	4 x W & 2 x H	Wedge Gasket
ACVG31N	4 x W & 2 x H	E Gasket
ACVL059	2 Pairs	VL72 End Cap
ACVL061	4(W/300)	VL72 Rivet
WCA106	14	Chevrons

ACCESSORIES FOR MID RAIL

ACUL070	1W	UL230 Foam
ACUL299	4	Bracket
ACUN036	2W	Wedge Gasket
ACUN3512	8	Screws
ACVG31N	2W	E Gasket

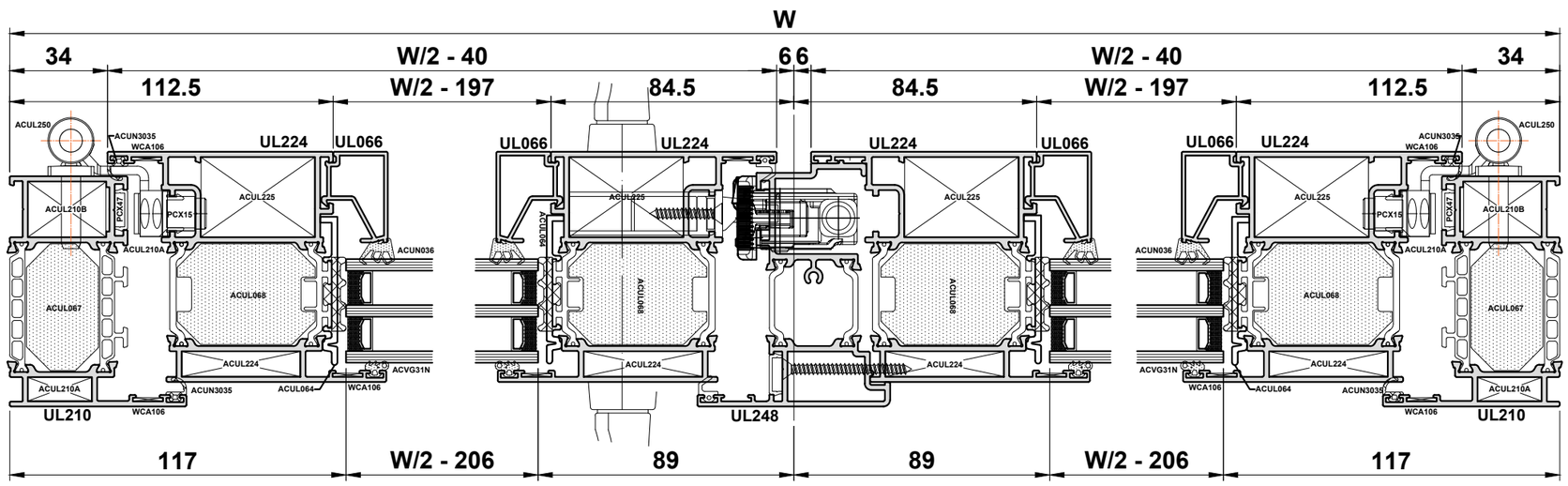

Do Not Scale From This Drawing

Open In Double Door with Low Ramp Threshold - Fingerbolt

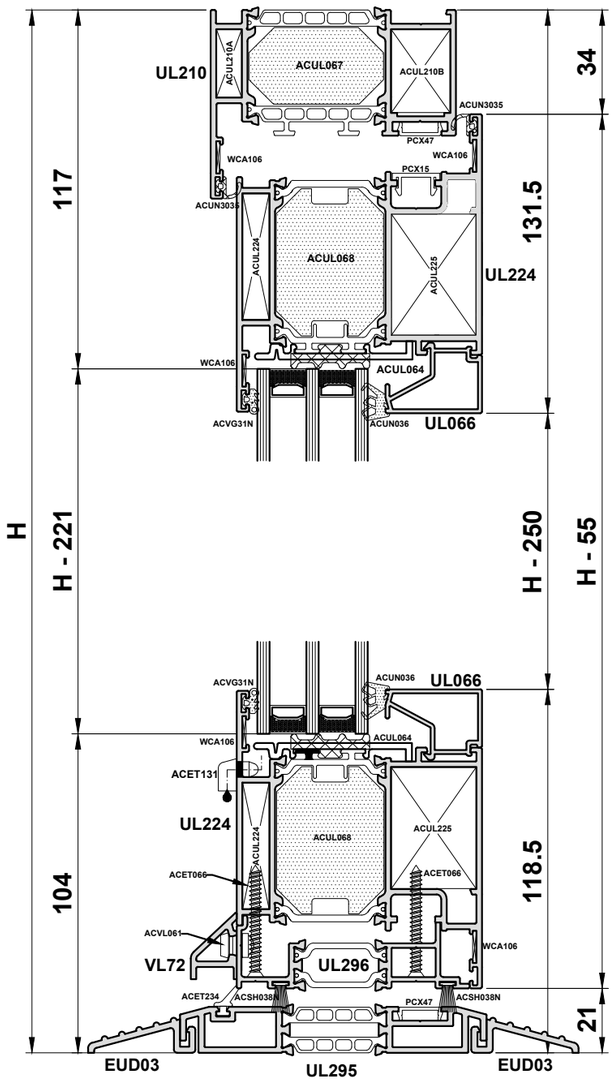

PROFILE CUTTING SCHEDULE

EUD03	2		W
UL210	2		H - 21
UL210	1		W
UL224	4		H - 55
UL224	4		W/2 - 40
UL248	1		H - 81
UL295	1		W
UL296	1		W/2 - 91
UL296	1		W/2 - 87.5
BEAD	4		H - 250
BEAD	4		W/2 - 197
PCX15	2		H - 93
PCX15	2		W - 106
PCX47	2		H - 56
PCX47	2		W - 82
VL72	2		W/2 - 110.5
UL230/1	2		W/2 - 197

GLASS SIZES

Without Midrail	W/2 - 206	H - 221
With Midrail G1	W/2 - 206	H1 - 161
With Midrail G2	W/2 - 206	H2 - 148

ACCESSORIES

ACCY3570S3	2	Euro Cylinder
ACDV251	2 Pairs	Handles
ACET234	1 x W	Threshold Gasket
ACUN3035	2 x W & 6 x H	Flipper Gasket
ACSH038N	2 x W	Woolpile
ACUL064	8 (+8 when using midrail)	Glass Packers
ACUL067	1 x W & 2 x H	Outer Frame Foam
ACUL068	2 x W & 4 x H	Sash Foam
ACUL210A	2	Outer Frame Cleat
ACUL210B	2	Outer Frame Cleat
ACUL224	8	Sash Cleat
ACUL225	8	Sash Cleat
ACUL244	1	UL248 End Cap
ACUL246	1	UL248 End Cap
ACUL250	6	Hinge
ACULXXX	1	Lift Lever/ Slam / Keywind fingerbolt lock
ACUL844	1	Fingerbolt
LOCK RODS	2	Lock rods for fingerbolt
ACUL390	2	Fingerbolt Keeps
ACUL242	2	Fingerbolt Guides
ACUL293	1 Pair	UL296 End Cap
ACUL294	1 Pair	UL295 End Cap
ACUL295	2	Low Threshold Bracket

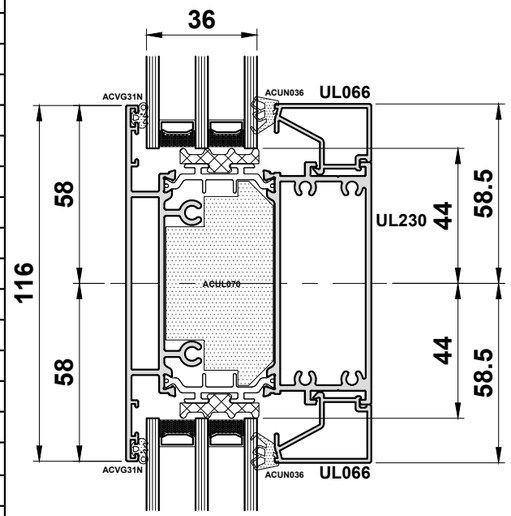

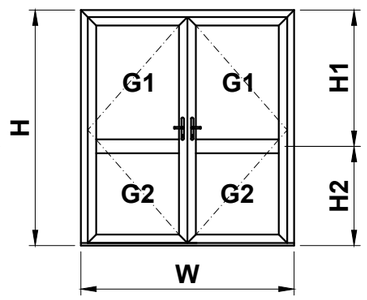

ACUL296	1 Pair	End Cap
ACUN036	4 x W & 2 x H	Wedge Gasket
ACVG31N	4 x W & 2 x H	E Gasket
ACVL059	2 Pairs	VL72 End Cap
ACVL061	4(W/300)	VL72 Rivet
WCA106	18	Chevrons

ACCESSORIES FOR MID RAIL

ACUL070	1W	UL230 Foam
ACUL299	4	Bracket
ACUN036	2W	Wedge Gasket
ACUN3512	8	Screws
ACVG31N	2W	E Gasket

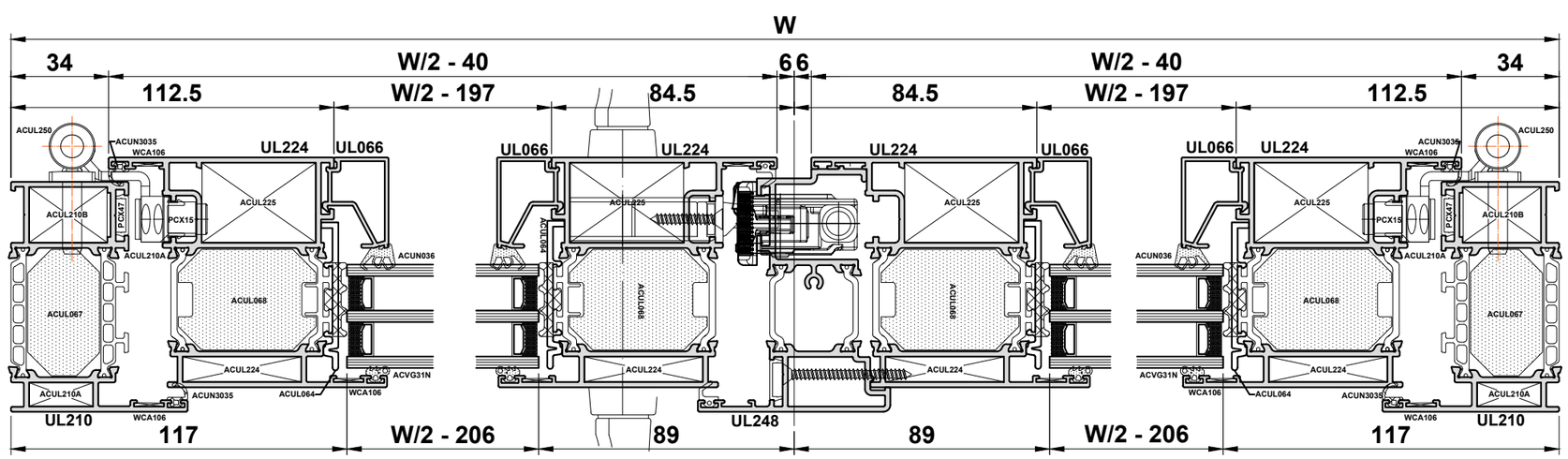

Do Not Scale From This Drawing

Open In Double Door with Full Frame - Fingerbolt

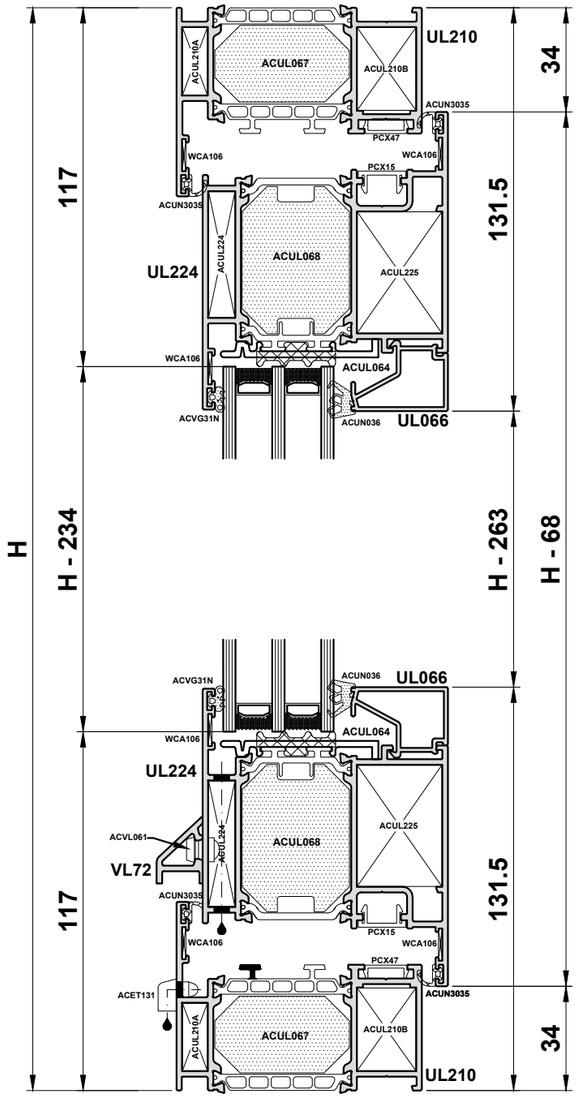

PROFILE CUTTING SCHEDULE

UL210	2		H
UL210	2		W
UL224	4		H - 68
UL224	4		W/2 - 40
UL248	1		H - 110
BEAD	4		H - 263
BEAD	4		W/2 - 197
PCX15	2		H - 106
PCX15	4		W/2 - 74
PCX47	2		H - 82
PCX47	3		W - 82
VL72	2		W/2 - 110.5
UL230/1	2		W/2 - 197

GLASS SIZES

Without Midrail	W/2 - 206	H - 234
With Midrail G1	W/2 - 206	H1 - 161
With Midrail G2	W/2 - 206	H2 - 161

ACCESSORIES

ACCY3570S3	2	Euro Cylinder
ACDV251	2 Pairs	Handles
ACET131	4	Drainage Cap
ACUN3035	4 x W & 6 x H	Flipper Gasket
ACUL064	8 (+8 when using midrail)	Glass Packers
ACUL067	2 x W & 2 x H	Outer Frame Foam
ACUL068	2 x W & 4 x H	Sash Foam
ACUL210A	4	Outer Frame Cleat
ACUL210B	4	Outer Frame Cleat
ACUL224	8	Sash Cleat
ACUL225	8	Sash Cleat
ACUL244	1 Pair	UL248 End Cap
ACUL250	6	Hinge
ACULXXX	1	Lift Lever/ Slam / Keywind fingerbolt lock
ACUL844	1	Fingerbolt
LOCK RODS	2	Lock rods for fingerbolt
ACUL390	2	Fingerbolt Keeps
ACUL242	2	Fingerbolt Guides
ACUN036	2 x W & 4 x H	Wedge Gasket
ACVG31N	2 x W & 4 x H	E Gasket
ACVL059	2 Pairs	VL72 End Cap
ACVL061	4(W/300)	VL72 Rivet
WCA106	24	Chevrons

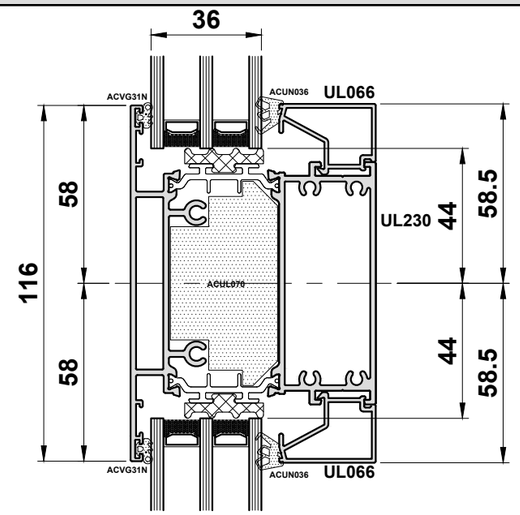

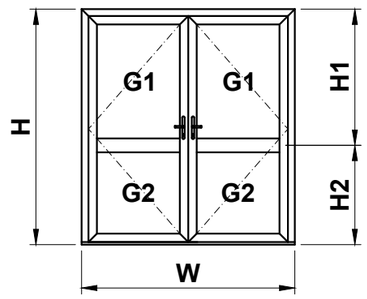

ACCESSORIES FOR MID RAIL

ACUL070	1W	UL230 Foam
ACUL299	4	Bracket
ACUN036	2W	Wedge Gasket
ACUN3512	8	Screws
ACVG31N	2W	E Gasket

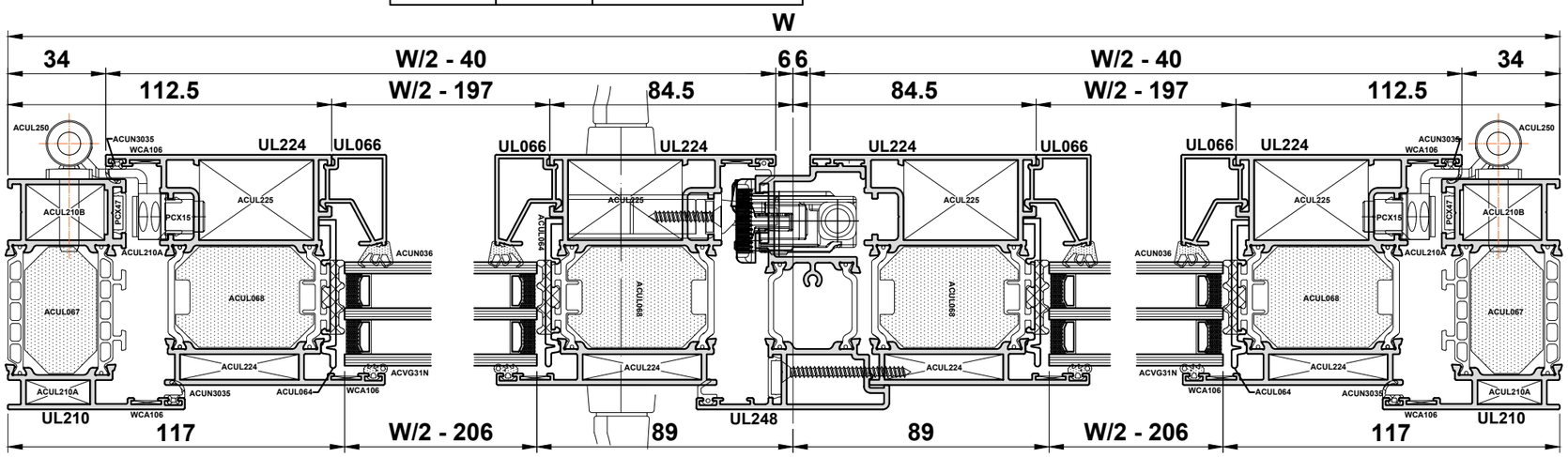

Do Not Scale From This Drawing

Open Out Single Door with Low Rebate Threshold

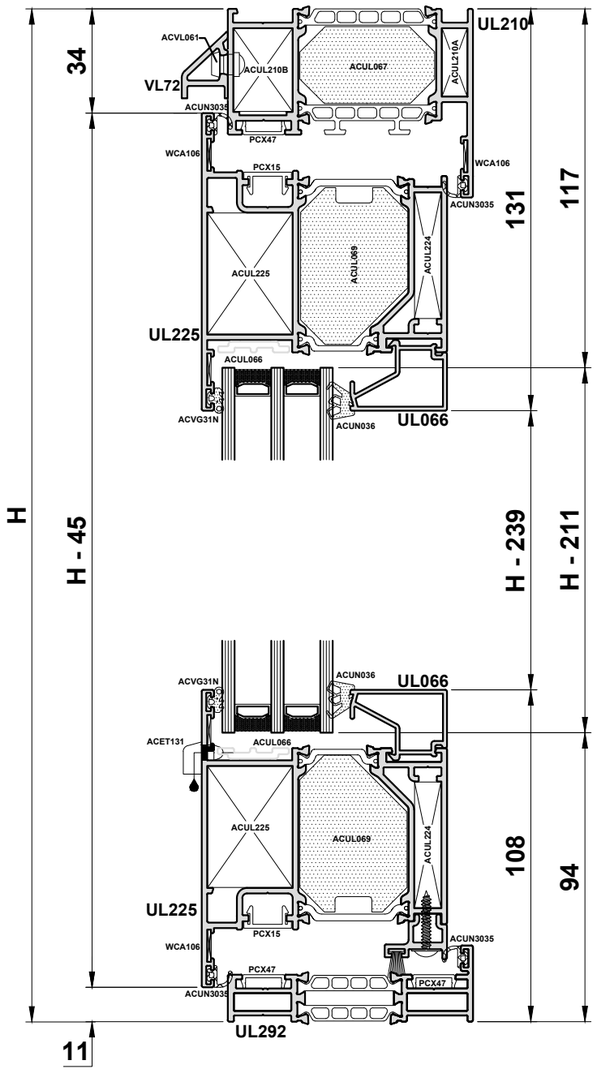

PROFILE CUTTING SCHEDULE

UL210	2		H - 15.5
UL210	1		W
UL225	2		H - 45
UL225	2		W - 68
UL292	1		W
UL297	1		W - 116
BEAD	2		H - 239
BEAD	2		W - 225
PCX15	2		H - 84
PCX15	2		W - 106
PCX47	3		H - 56
PCX47	2		W - 82
VL72	1		W - 82
UL230/1	1		W - 225

GLASS SIZES

Without Midrail	W - 234	H - 211
With Midrail G1	W - 234	H1 - 161
With Midrail G2	W - 234	H2 - 138

ACCESSORIES

ACCY3570S3	1	Euro Cylinder
ACDV251	1 Pair	Handles
ACUN3035	4 x W & 4 x H	Flipper Gasket
ACSH038N	1 x W	Woolpile
ACUL066	4 (+4 if using midrail)	Glass Packers
ACUL067	1 x W & 2 x H	Outer Frame Foam
ACUL069	2 x W & 2 x H	Sash Foam
ACUL210A	2	Outer Frame Cleat
ACUL210B	2	Outer Frame Cleat
ACUL224	4	Sash Cleat
ACUL225	4	Sash Cleat
ACUL250	3	Hinge
ACUL272/3	1	Primary Lock
ACUL292	1 Pair	UL292 End Cap
ACUL297	1 Pair	UL291 End Cap
ACUL295	2	Low Threshold Bracket
ACUN036	2 x W & 2 x H	Wedge Gasket
ACVG31N	2 x W & 2 x H	E Gasket
ACVL059	1 Pair	VL72 End Cap
ACVL061	2(W/300)	VL72 Rivet
WCA106	6	Chevrons

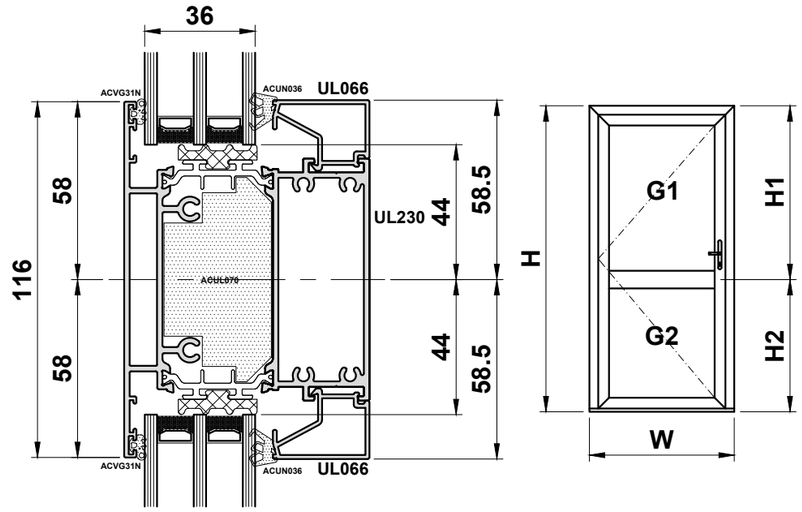

ACCESSORIES FOR MID RAIL

ACUL070	1W	UL230 Foam
ACUL299	2	Bracket
ACUN036	2W	Wedge Gasket
ACUN3512	4	Screws
ACVG31N	2W	E Gasket

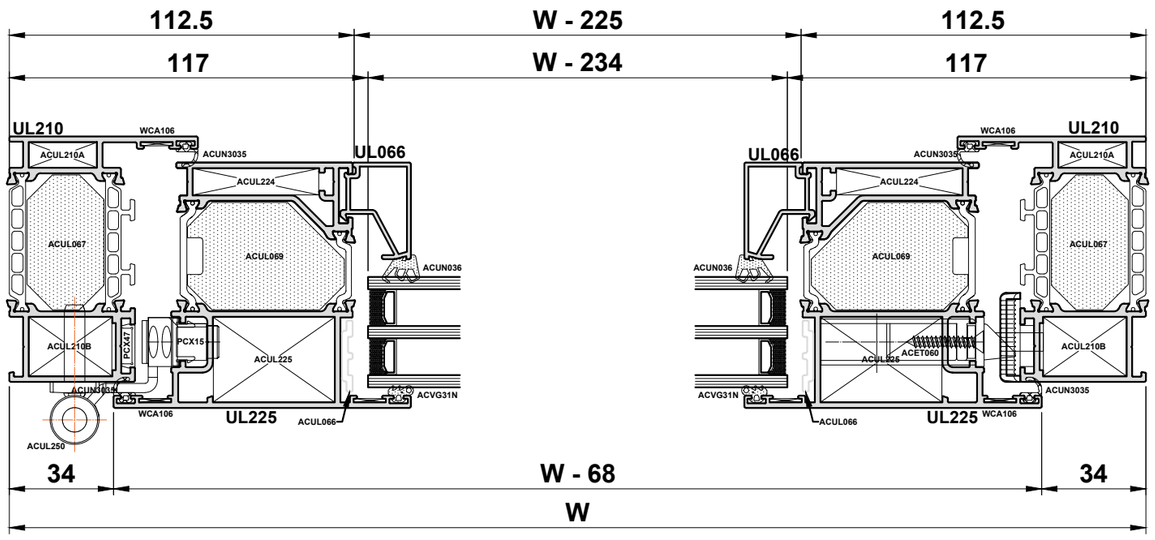

Do Not Scale From This Drawing

Open Out Double Door with Low Rebate Threshold

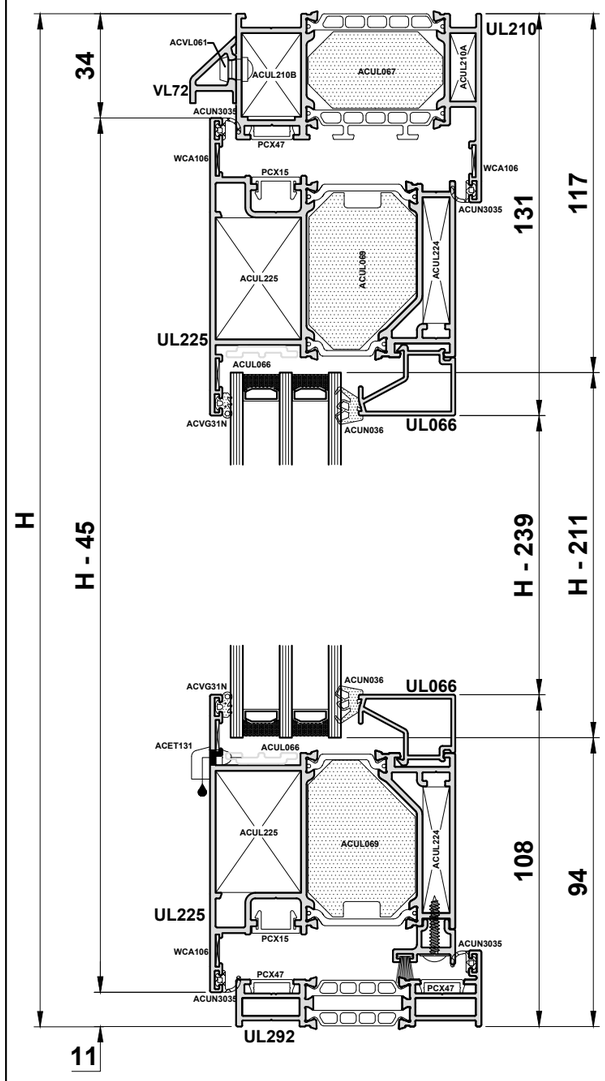

PROFILE CUTTING SCHEDULE

UL210	2		H - 15.5
UL210	1		W
UL225	4		H - 45
UL225	4		W/2 - 36.5
UL247	1		H - 81
UL292	1		W
UL297	2		W/2 - 79.5
BEAD	4		H - 239
BEAD	4		W/2 - 192.5
PCX15	2		H - 83
PCX15	4		W/2 - 74
PCX47	3		H - 56
PCX47	3		W - 82
VL72	2		W/2 - 58.5
UL230/1	2		W/2 - 197

GLASS SIZES

Without Midrail	W/2 - 202.5	H - 211
With Midrail G1	W/2 - 202.5	H1 - 161
With Midrail G2	W/2 - 202.5	H2 - 138

ACCESSORIES

ACCY3570S3	2	Euro Cylinder
ACDV251	2 Pairs	Handles
ACUN3035	7 x W & 4 x H	Flipper Gasket
ACSH038N	2 x W	Woolpile
ACUL066	8 (+8 if using midrail)	Glass Packers
ACUL067	1 x W & 2 x H	Outer Frame Foam
ACUL069	2 x W & 4 x H	Sash Foam
ACUL210A	2	Outer Frame Cleat
ACUL210B	2	Outer Frame Cleat
ACUL224	8	Sash Cleat
ACUL225	8	Sash Cleat
ACUL247	1	UL247 End Cap
ACUL248	1	UL247 End Cap
ACUL250	6	Hinge
ACUL277/8	1	Primary Lock
ACUL279	1	Secondary Lock
ACUL292	1 Pair	UL292 End Cap
ACUL295	2	Low Threshold Bracket
ACUL297	2 Pairs	UL297 End Cap
ACUN036	2 x W & 4 x H	Wedge Gasket
ACVG31N	2 x W & 4 x H	E Gasket
ACVL059	1 Pair	VL72 End Cap
ACVL061	4(W/300)	VL72 Rivet
WCA106	14	Chevrons

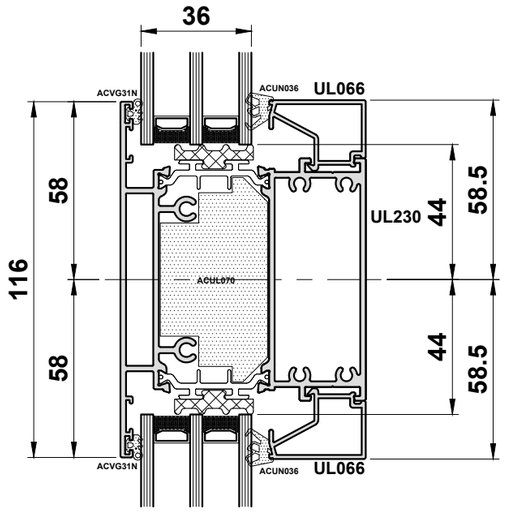

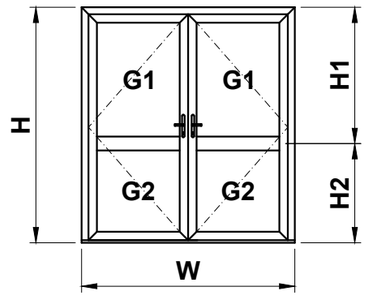

ACCESSORIES FOR MID RAIL

ACUL070	1W	UL230 Foam
ACUL299	4	Bracket
ACUN036	2W	Wedge Gasket
ACUN3512	8	Screws
ACVG31N	2W	E Gasket

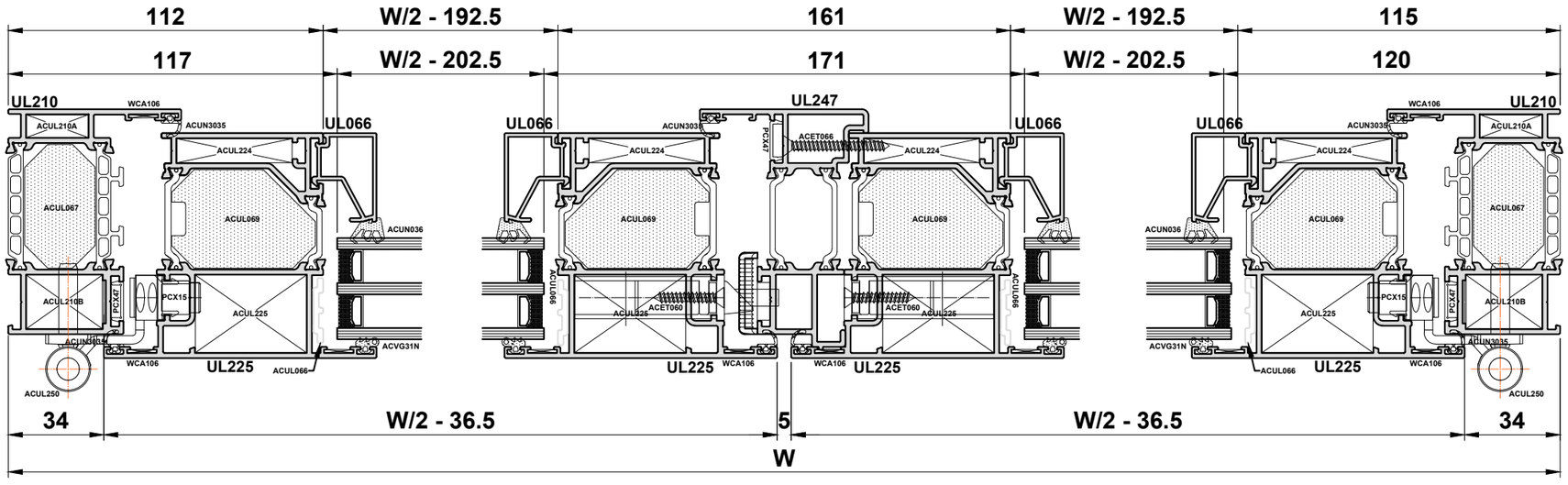

Do Not Scale From This Drawing

Open Out Double Door with Low Ramp Threshold

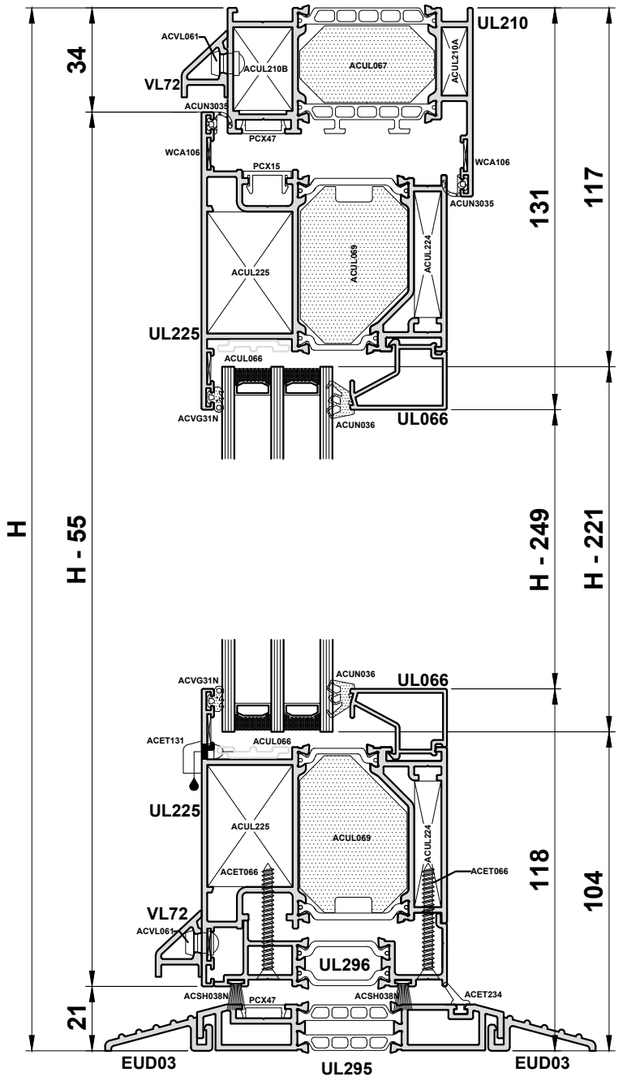

PROFILE CUTTING SCHEDULE

EUD03	2		W
UL210	2		H - 15.5
UL210	1		W
UL225	2		H - 55
UL225	2		W - 68
UL295	1		W
UL296	1		W - 115
BEAD	2		H - 249
BEAD	2		W - 225
PCX15	1		H - 53.5
PCX15	2		W - 106
PCX47	2		H - 56
PCX47	2		W - 82
VL72	1		W - 82
UL230/1	1		W - 225

GLASS SIZES

Without Midrail	W - 234	H - 221
With Midrail G1	W - 234	H1 - 161
With Midrail G2	W - 234	H2 - 148

ACCESSORIES

ACCY3570S3	1	Euro Cylinder
ACDV251	1 Pair	Handles
ACET234	1 x W-82	Threshold Gasket
ACUN3035	2 x W & 4 x H	Flipper Gasket
ACSH038N	2 x W	Woolpile
ACUL066	4 (+4 if using midrail)	Glass Packers
ACUL067	1 x W & 2 x H	Outer Frame Foam
ACUL069	2 x W & 2 x H	Sash Foam
ACUL210A	2	Outer Frame Cleat
ACUL210B	2	Outer Frame Cleat
ACUL224	4	Sash Cleat
ACUL225	4	Sash Cleat
ACUL250	3	Hinge
ACUL272/3	1	Primary Lock
ACUL294	1 Pair	UL295 End Cap
ACUL295	2	Low Threshold Bracket
ACUL296	1 Pair	UL296 End Cap
ACUN036	2 x W & 2 x H	Wedge Gasket
ACVG31N	2 x W & 2 x H	E Gasket
ACVL059	1 Pair	VL72 End Cap
ACVL061	2(W/300)	VL72 Rivet
WCA106	6	Chevrons

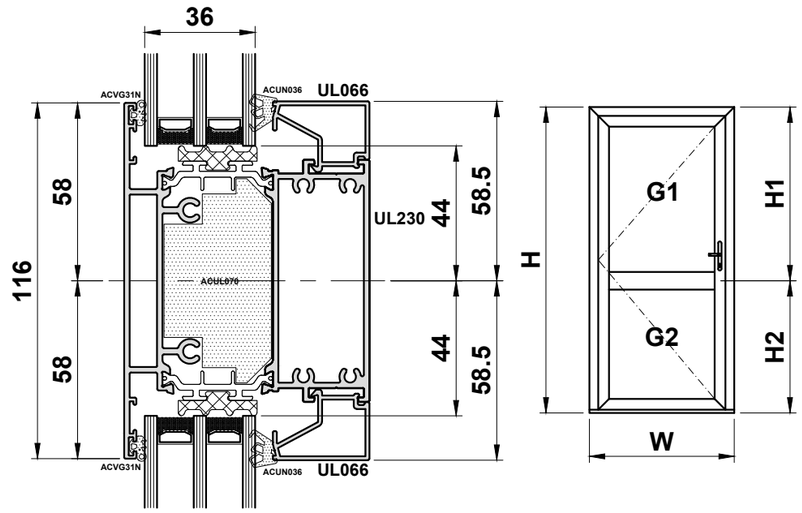

ACCESSORIES FOR MID RAIL

ACUL070	1W	UL230 Foam
ACUL299	2	Bracket
ACUN036	2W	Wedge Gasket
ACUN3512	4	Screws
ACVG31N	2W	E Gasket

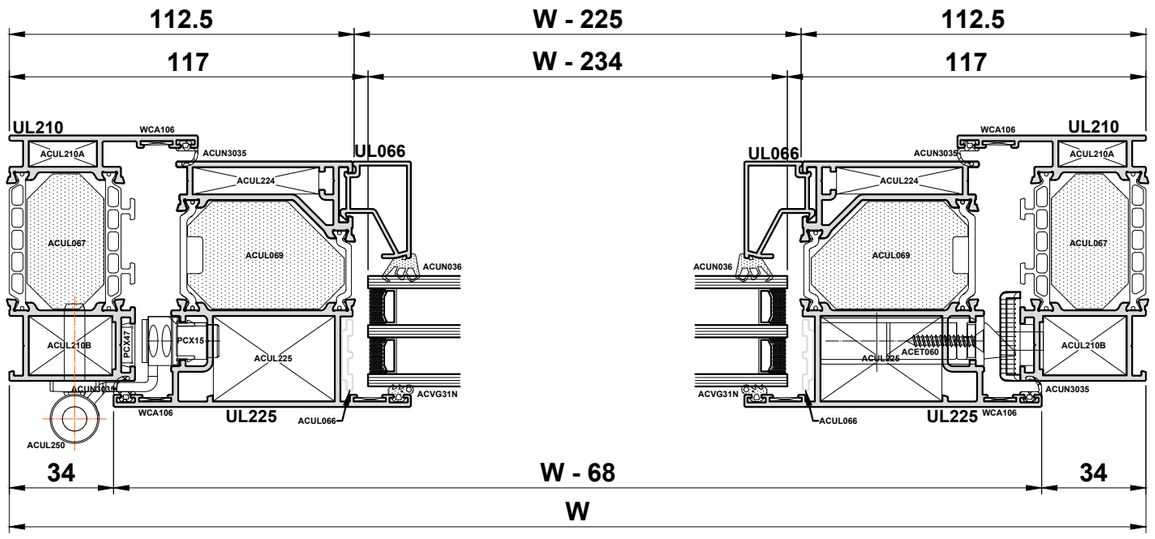

Do Not Scale From This Drawing

Visotherm Door

SAWING TABLES : OPEN OUT

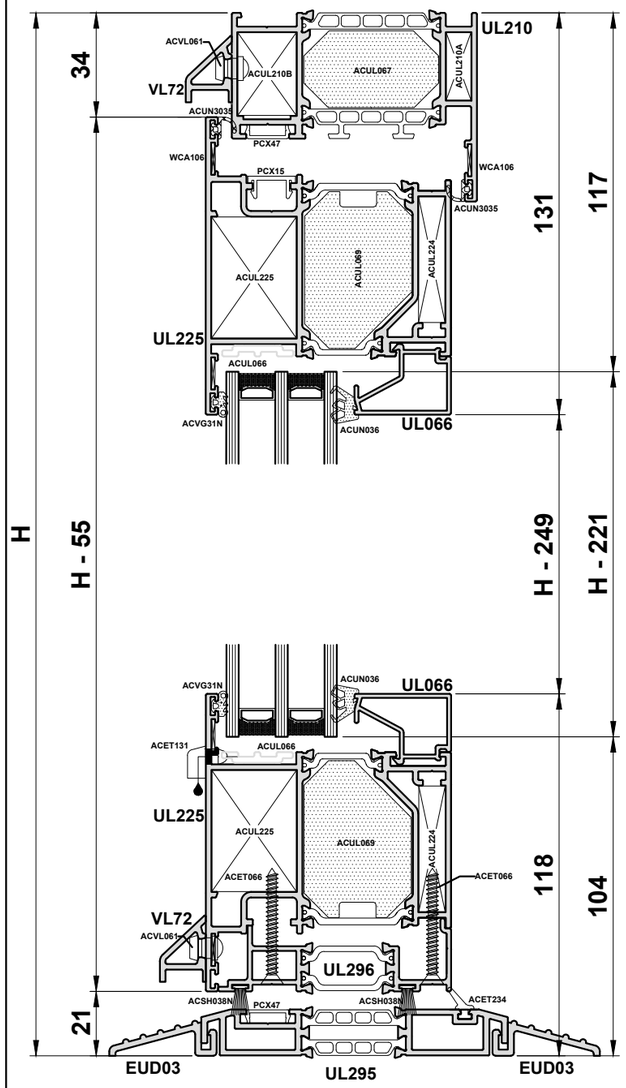

PROFILE CUTTING SCHEDULE

EUD03	2		W
UL210	2		H - 15.5
UL210	1		W
UL225	4		H - 55
UL225	4		W/2 - 36.5
UL247	1		H - 81
UL295	1		W
UL296	2		W/2 - 87.5
BEAD	4		H - 249
BEAD	4		W/2 - 192.5
PCX15	1		H - 53.5
PCX15	2		W/2 - 106
PCX47	2		H - 56
PCX47	3		W/2 - 82
VL72	2		W/2 - 48.5
UL230/1	2		W/2 - 197

GLASS SIZES

Without Midrail	W/2 - 202.5	H - 221
With Midrail G1	W/2 - 202.5	H1 - 161
With Midrail G2	W/2 - 202.5	H2 - 148

ACCESSORIES

ACCY3570S3	2	Euro Cylinder
ACDV251	2 Pairs	Handles
ACET234	1 x W-82	Threshold Gasket
ACUN3035	2 x W & 7 x H	Flipper Gasket
ACSH038N	2 x W	Woolpile
ACUL066	8 (+8 if using midrail)	Glass Packers
ACUL067	1 x W & 2 x H	Outer Frame Foam
ACUL069	2 x W & 4 x H	Sash Foam
ACUL210A	2	Outer Frame Cleat
ACUL210B	2	Outer Frame Cleat
ACUL224	8	Sash Cleat
ACUL225	8	Sash Cleat
ACUL249	1	UL247 End Cap
ACUL247	1	UL247 End Cap
ACUL250	6	Hinge
ACUL277/8	1	Primary Lock
ACUL279	1	Secondary Lock
ACUL293	1 Pair	UL296 End Cap
ACUL294	1 Pair	UL295 End Cap
ACUL295	2	Low Threshold Bracket
ACUL296	1 Pair	UL296 End Cap
ACUN036	2 x W & 4 x H	Wedge Gasket
ACVG31N	2 x W & 4 x H	E Gasket
ACVL059	2 Pairs	VL72 End Cap
ACVL061	4(W/300)	VL72 Rivet
WCA106	14	Chevrons

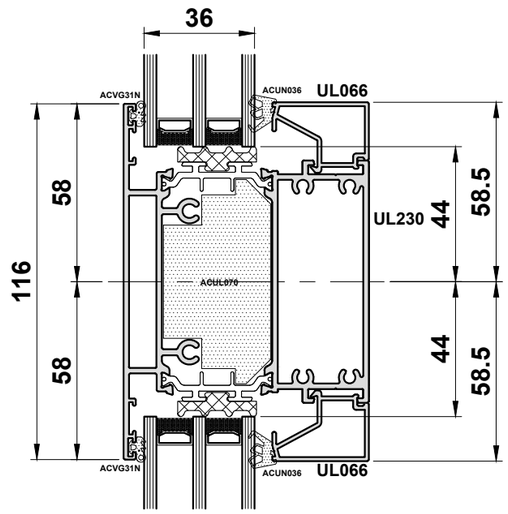

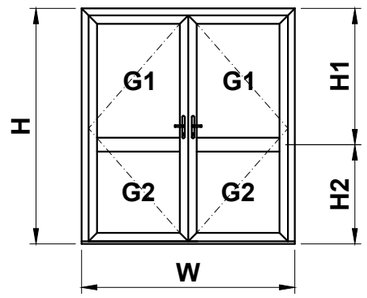

ACCESSORIES FOR MID RAIL

ACUL070	1W	UL230 Foam
ACUL299	4	Bracket
ACUN036	2W	Wedge Gasket
ACUN3512	8	Screws
ACVG31N	2W	E Gasket

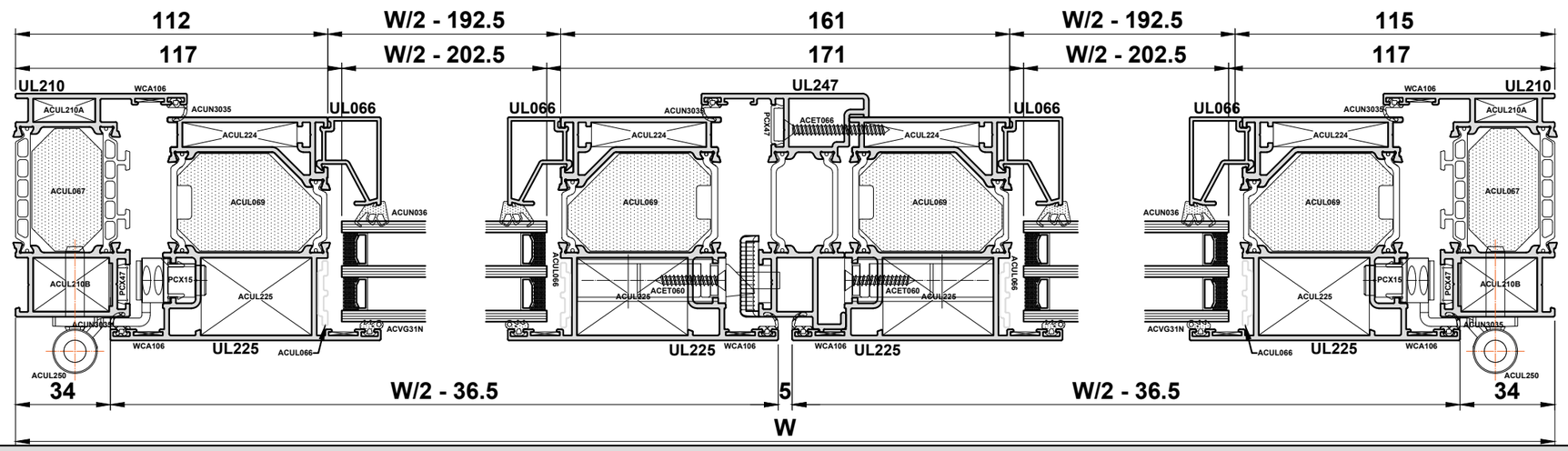

Do Not Scale From This Drawing

Visotherm Doors

SAWING TABLES : OPEN OUT

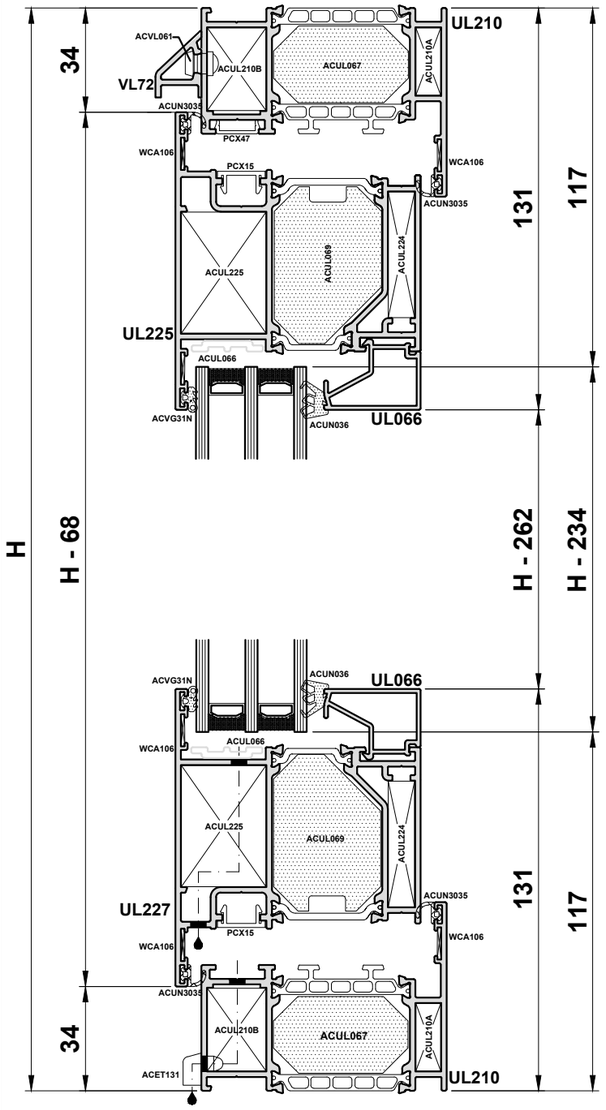

PROFILE CUTTING SCHEDULE

UL210	2		H
UL210	2		W
UL225	2		H - 68
UL225	2		W - 68
BEAD	2		H - 262
BEAD	2		W - 225
PCX15	2		H - 106
PCX15	2		W - 106
PCX47	2		H - 82
PCX47	2		W - 82
VL72	1		W - 82
UL230/1	1		W - 225

GLASS SIZES

Without Midrail	W - 234	H - 234
With Midrail G1	W - 234	H1 - 161
With Midrail G2	W - 234	H2 - 161

ACCESSORIES

ACCY3570S3	1	Euro Cylinder
ACDV251	1 Pair	Handles
ACET131	2	Drainage Cap
ACUN3035	4 x W & 4 x H	Flipper Gasket
ACUL066	4 (+4 if using midrail)	Glass Packers
ACUL067	2 x W & 2 x H	Outer Frame Foam
ACUL069	2 x W & 2 x H	Sash Foam
ACUL210A	4	Outer Frame Cleat
ACUL210B	4	Outer Frame Cleat
ACUL224	4	Sash Cleat
ACUL225	4	Sash Cleat
ACUL250	3	Hinge
ACUL272/3	1	Primary Lock
ACUN036	2 x W & 2 x H	Wedge Gasket
ACVG31N	2 x W & 2 x H	E Gasket
ACVL059	1 Pair	VL72 End Cap
ACVL061	2(W/300)	VL72 Rivet
WCA106	8	Chevrons

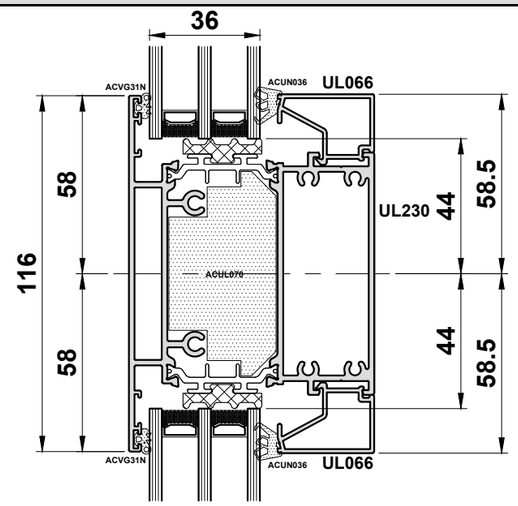

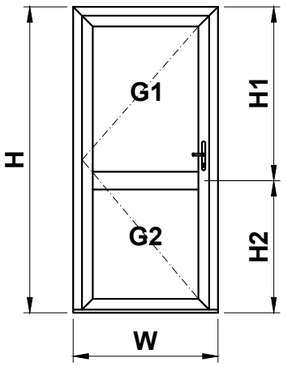

ACCESSORIES FOR MID RAIL

ACUL070	1W	UL230 Foam
ACUL299	2	Bracket
ACUN036	2W	Wedge Gasket
ACUN3512	4	Screws
ACVG31N	2W	E Gasket

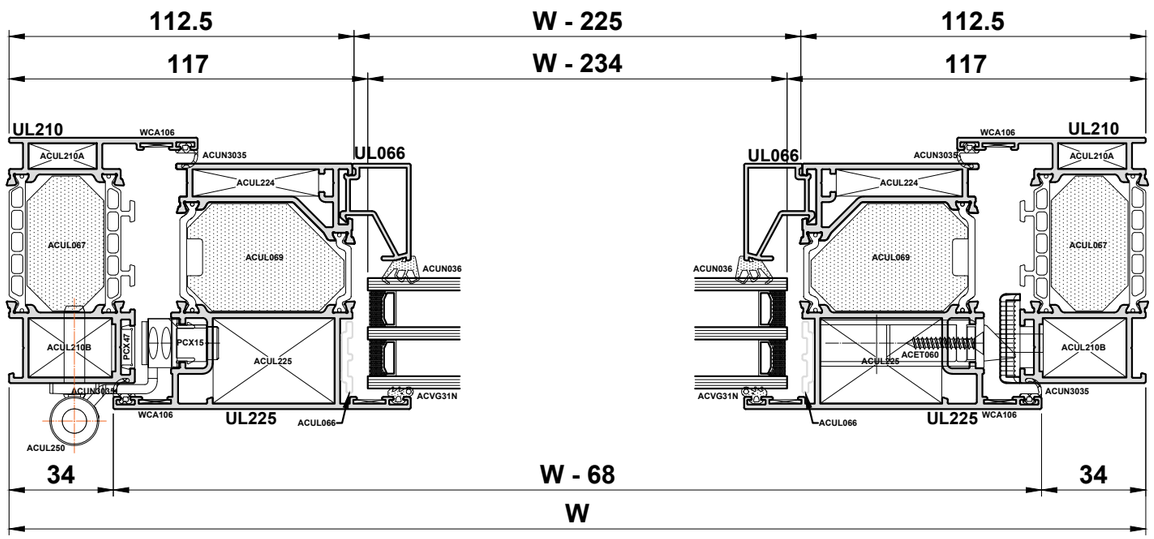

Do Not Scale From This Drawing

ISSUED: OCTOBER 2022

Visotherm Doors

SAWING TABLES : OPEN OUT

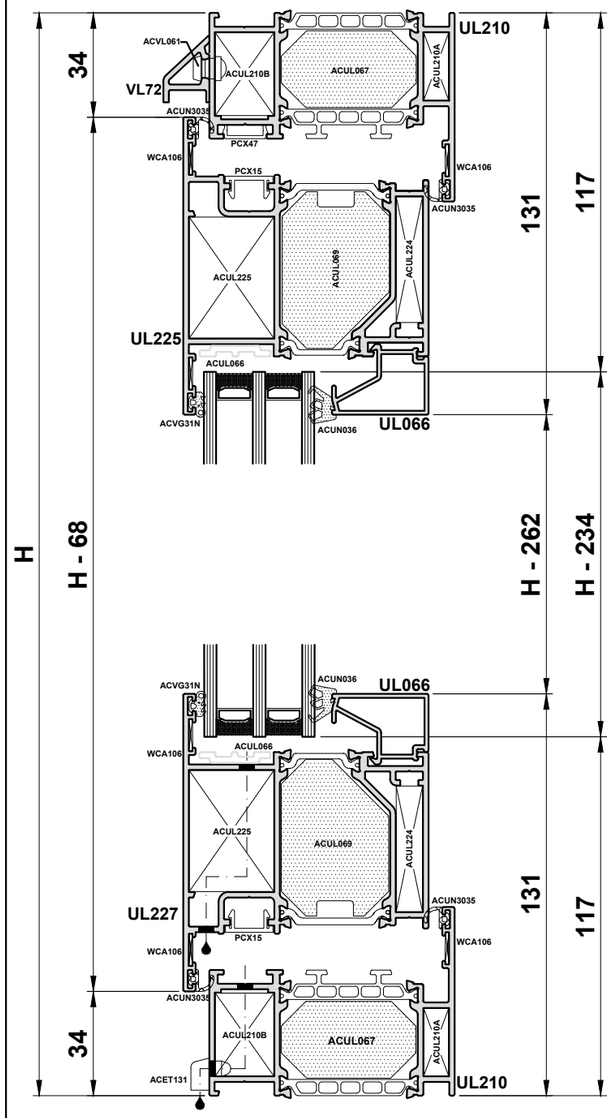

PROFILE CUTTING SCHEDULE

UL210	2		H
UL210	2		W
UL225	4		H - 68
UL225	4		W/2 - 36.5
UL247	1		H - 110
BEAD	4		H - 262
BEAD	4		W/2 - 192.5
PCX15	2		H - 106
PCX15	2		W/2 - 106
PCX47	2		H - 82
PCX47	3		W/2 - 82
VL72	2		W/2 - 50.5
UL230/1	2		W/2 - 197

GLASS SIZES

Without Midrail	W/2 - 202.5	H - 234
With Midrail G1	W/2 - 202.5	H1 - 161
With Midrail G2	W/2 - 202.5	H2 - 161

ACCESSORIES

ACCY3570S3	2	Euro Cylinder
ACDV251	2 Pairs	Handles
ACET131	4	Drainage Cap
ACUN3035	4 x W & 7 x H	Flipper Gasket
ACUL066	8 (+8 if using midrail)	Glass Packers
ACUL067	2 x W & 2 x H	Outer Frame Foam
ACUL069	2 x W & 4 x H	Sash Foam
ACUL210A	4	Outer Frame Cleat
ACUL210B	4	Outer Frame Cleat
ACUL224	8	Sash Cleat
ACUL225	8	Sash Cleat
ACUL247	1 Pair	UL247 End Cap
ACUL250	6	Hinge
ACUL277/8	1	Primary Lock
ACUL279	1	Secondary Lock
ACUN036	2 x W & 4 x H	Wedge Gasket
ACVG31N	2 x W & 4 x H	E Gasket
ACVL059	2 Pairs	VL72 End Cap
ACVL061	4(W/300)	VL72 Rivet
WCA106	14	Chevrons

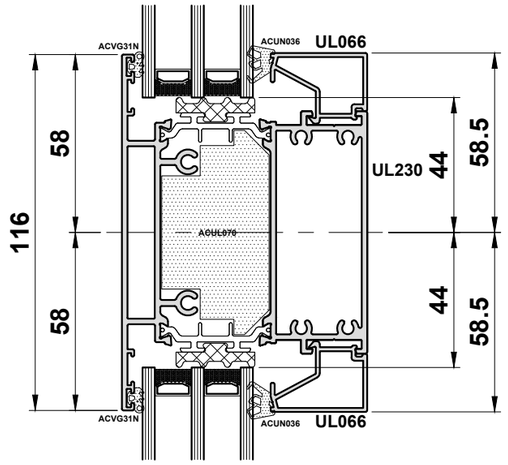

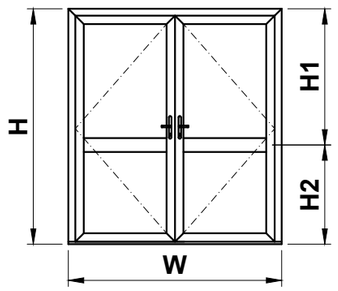

ACCESSORIES FOR MID RAIL

ACUL070	1W	UL230 Foam
ACUL299	4	Bracket
ACUN036	2W	Wedge Gasket
ACUN3512	8	Screws
ACVG31N	2W	E Gasket

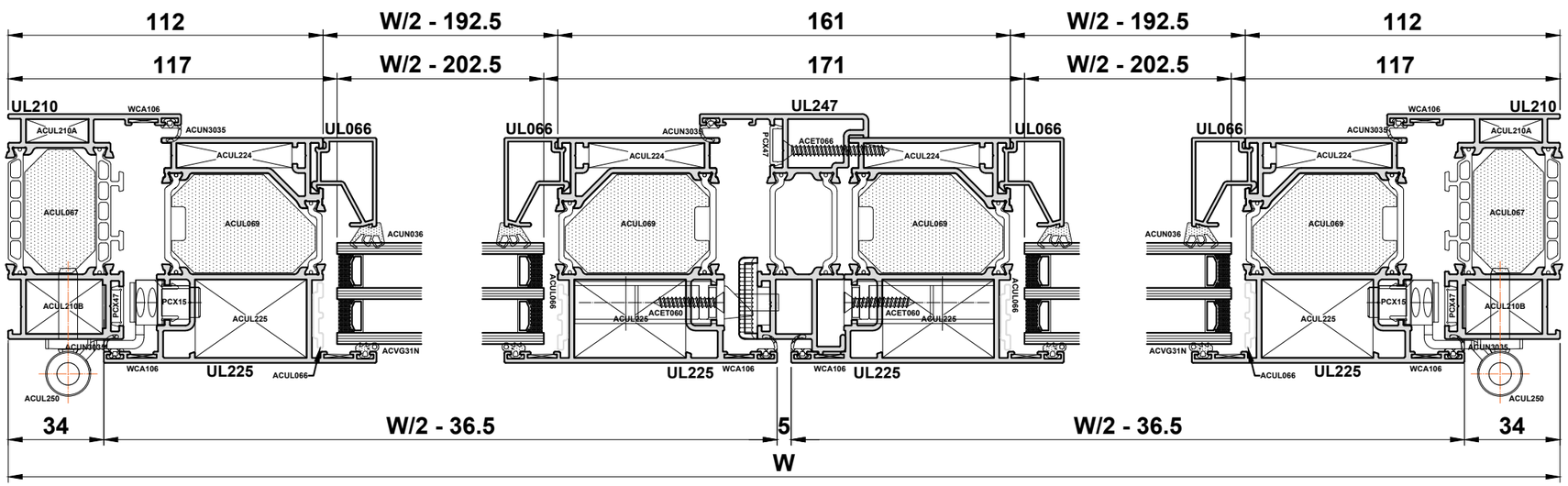

Do Not Scale From This Drawing

Open Out Double Door with Low Rebate Threshold - Fingerbolt

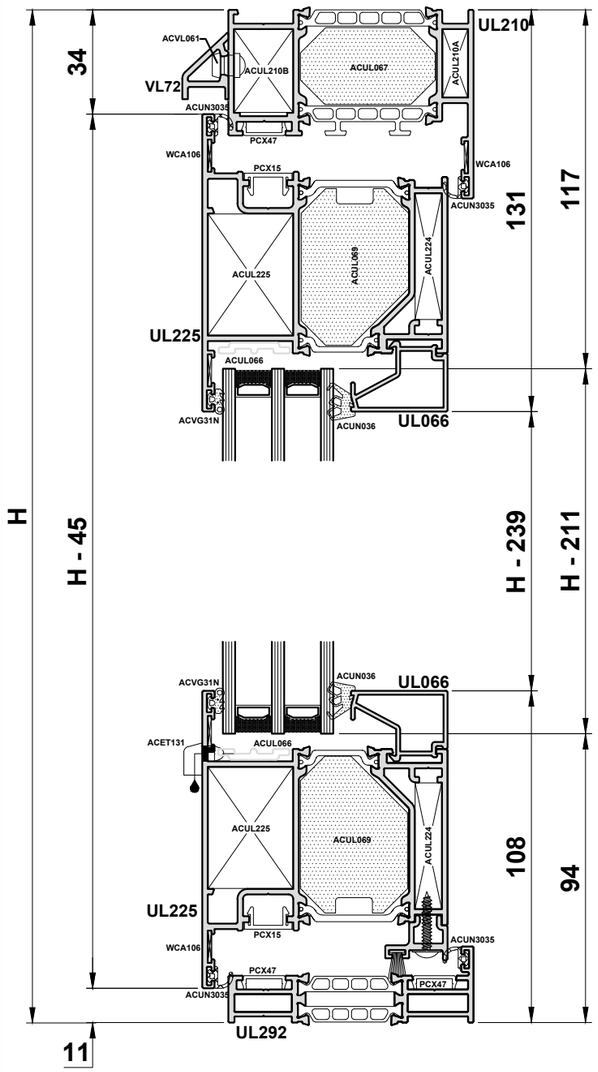

PROFILE CUTTING SCHEDULE

UL210	2		H - 15.5
UL210	1		W
UL225	4		H - 45
UL225	4		W/2 - 40
UL247	1		H - 81
UL292	1		W
UL297	1		W/2 - 88
UL297	1		W/2 - 86
BEAD	4		H - 239
BEAD	4		W/2 - 196
PCX15	2		H - 84
PCX15	4		W/2 - 78
PCX47	3		H - 56
PCX47	3		W - 82
VL72	2		W/2 - 58.5
UL230/1	2		W/2 - 197

GLASS SIZES

Without Midrail	W/2 - 206	H - 211
With Midrail G1	W/2 - 206	H1 - 161
With Midrail G2	W/2 - 206	H2 - 138

ACCESSORIES

ACCY3570S3	2	Euro Cylinder
ACDV251	2 Pairs	Handles
ACUN3035	4 x W & 6 x H	Flipper Gasket
ACSH038N	2 x W	Woolpile
ACUL066	8 (+8 when using midrail)	Glass Packers
ACUL067	1 x W & 2 x H	Outer Frame Foam
ACUL069	2 x W & 4 x H	Sash Foam
ACUL210A	2	Outer Frame Cleat
ACUL210B	2	Outer Frame Cleat
ACUL224	8	Sash Cleat
ACUL225	8	Sash Cleat
ACUL244	1	UL248 End Cap
ACUL245	1	UL248 End Cap
ACUL250	6	Hinge
ACULXXX	1	Lift Lever/ Slam / Keywind fingerbolt lock
ACUL844	1	Fingerbolt
LOCK RODS	2	Lock rods for fingerbolt
ACUL390	2	Fingerbolt Keeps
ACUL242	2	Fingerbolt Guides
ACUL292	1 Pair	UL292 End Cap
ACUL295	2	Low Threshold Bracket
ACUL297	2 Pairs	UL297 End Cap

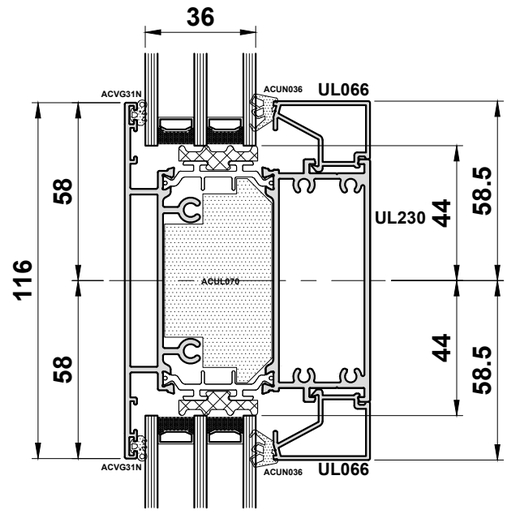

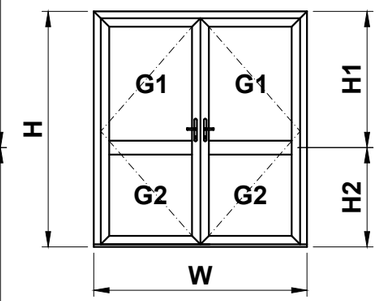

ACUN036	2 x W & 4 x H	Wedge Gasket
ACVG31N	2 x W & 4 x H	E Gasket
ACVL059	1 Pair	VL72 End Cap
ACVL061	4(W/300)	VL72 Rivet
WCA106	14	Chevrons

ACCESSORIES FOR MID RAIL

ACUL070	1W	UL230 Foam
ACUL299	4	Bracket
ACUN036	2W	Wedge Gasket
ACUN3512	8	Screws
ACVG31N	2W	E Gasket

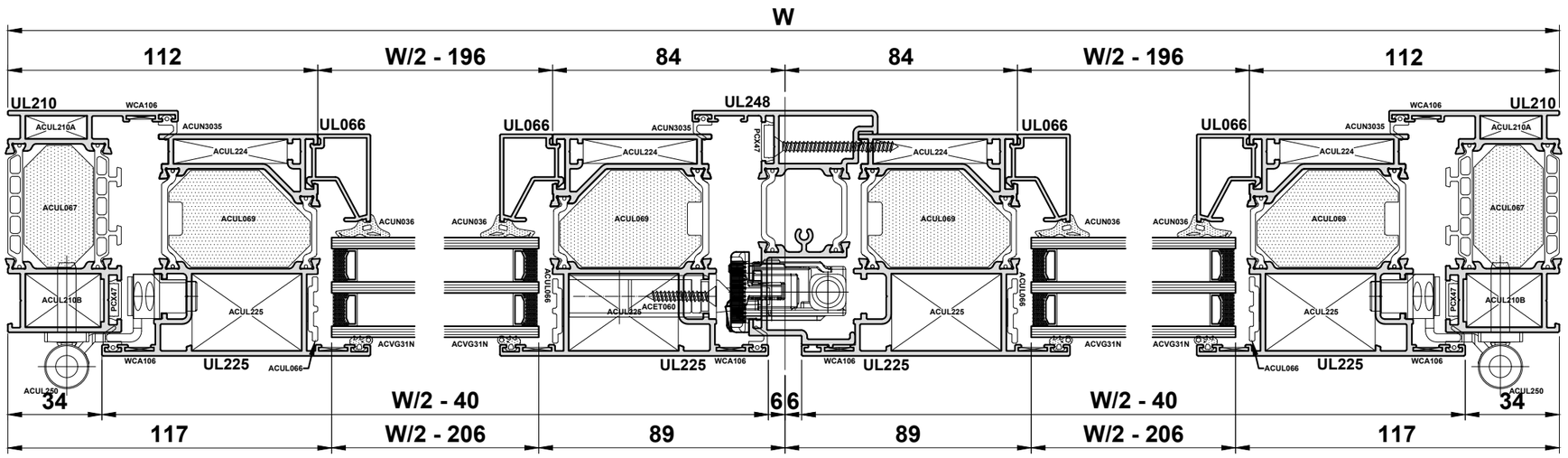

Do Not Scale From This Drawing

Open Out Double Door with Low Ramp Threshold - Fingerbolt

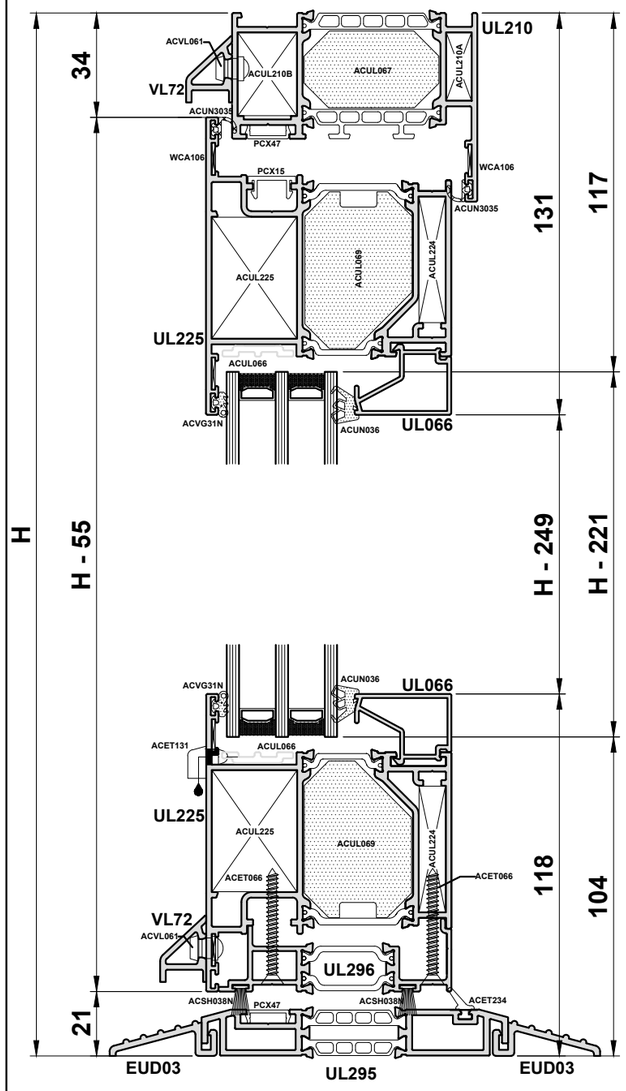

PROFILE CUTTING SCHEDULE

EUD03	2		W
UL210	2		H - 15.5
UL210	1		W
UL225	4		H - 55
UL225	4		W/2 - 40
UL248	1		H - 81
UL295	1		W
UL296	1		W/2 - 87.5
UL296	1		W/2 - 87.5
BEAD	4		H - 249
BEAD	4		W/2 - 196
PCX15	2		H - 93
PCX15	2		W - 106
PCX47	2		H - 56
PCX47	3		W - 82
VL72	2		W/2 - 48.5
UL230/1	2		W/2 - 197

GLASS SIZES

Without Midrail	W/2 - 206	H - 221
With Midrail H1	W/2 - 206	H1 - 161
With Midrail H2	W/2 - 206	H2 - 148

ACCESSORIES

ACCY3570S3	2	Euro Cylinder
ACDV251	2 Pairs	Handles
ACET234	1 x W	Threshold Gasket
ACUN3035	2 x W & 6 x H	Flipper Gasket
ACSH038N	2 x W	Woolpile
ACUL066	8 (+8 if using midrail)	Glass Packers
ACUL067	1 x W & 2 x H	Outer Frame Foam
ACUL069	2 x W & 4 x H	Sash Foam
ACUL210A	2	Outer Frame Cleat
ACUL210B	2	Outer Frame Cleat
ACUL224	8	Sash Cleat
ACUL225	8	Sash Cleat
ACUL244	1	UL248 End Cap
ACUL246	1	UL248 End Cap
ACUL250	6	Hinge
ACULXXX	1	Lift Lever/ Slam / Keywind fingerbolt lock
ACUL844	1	Fingerbolt
LOCK RODS	2	Lock rods for fingerbolt
ACUL390	2	Fingerbolt Keeps
ACUL242	2	Fingerbolt Guides
ACUL293	1 Pair	UL296 End Cap
ACUL294	1 Pair	UL295 End Cap
ACUL295	2	Low Threshold Bracket

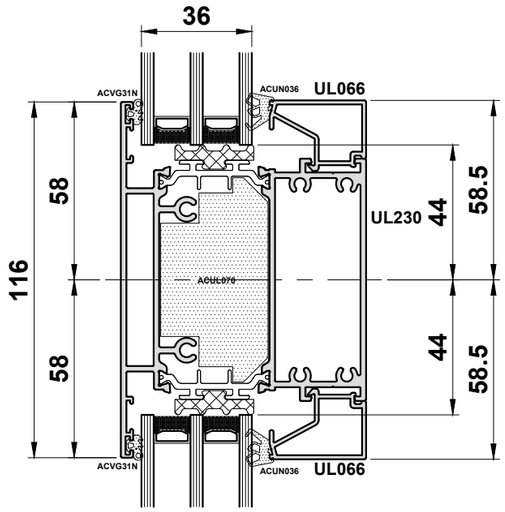

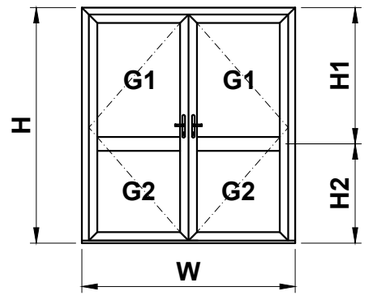

ACUL296	1 Pair	UL296 End Cap
ACUN036	2 x W & 4 x H	Wedge Gasket
ACVG31N	2 x W & 4 x H	E Gasket
ACVL059	2 Pairs	VL72 End Cap
ACVL061	4(W/300)	VL72 Rivet
WCA106	14	Chevrons

ACCESSORIES FOR MID RAIL

ACUL070	1W	UL230 Foam
ACUL299	4	Bracket
ACUN036	2W	Wedge Gasket
ACUN3512	8	Screws
ACVG31N	2W	E Gasket

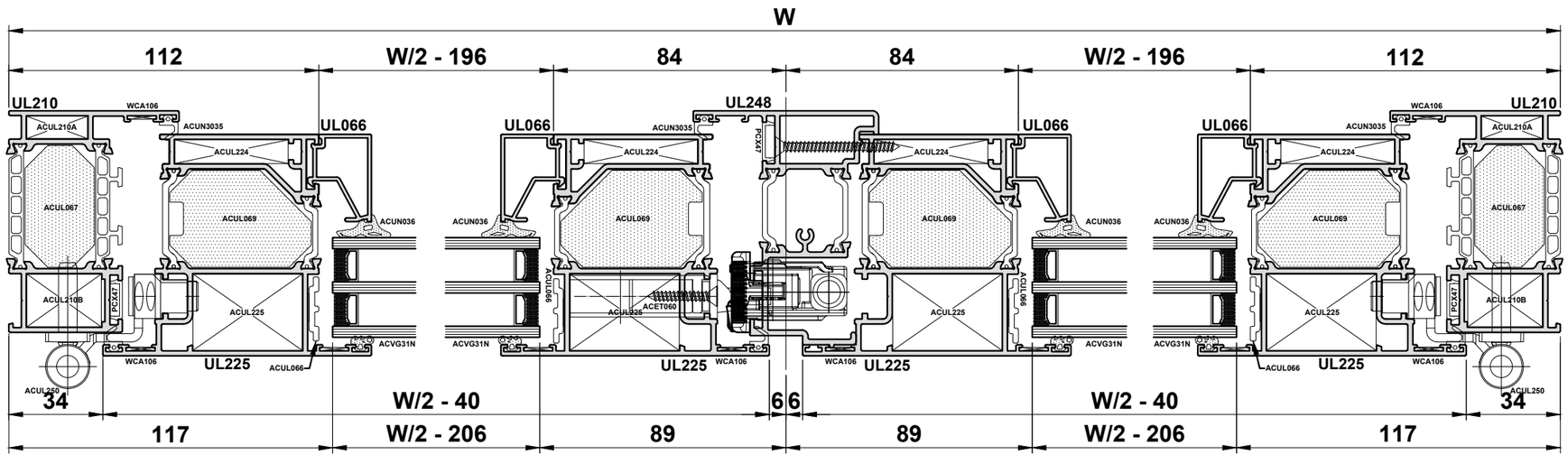

Do Not Scale From This Drawing

Open Out Double Door with Full Frame - Fingerbolt

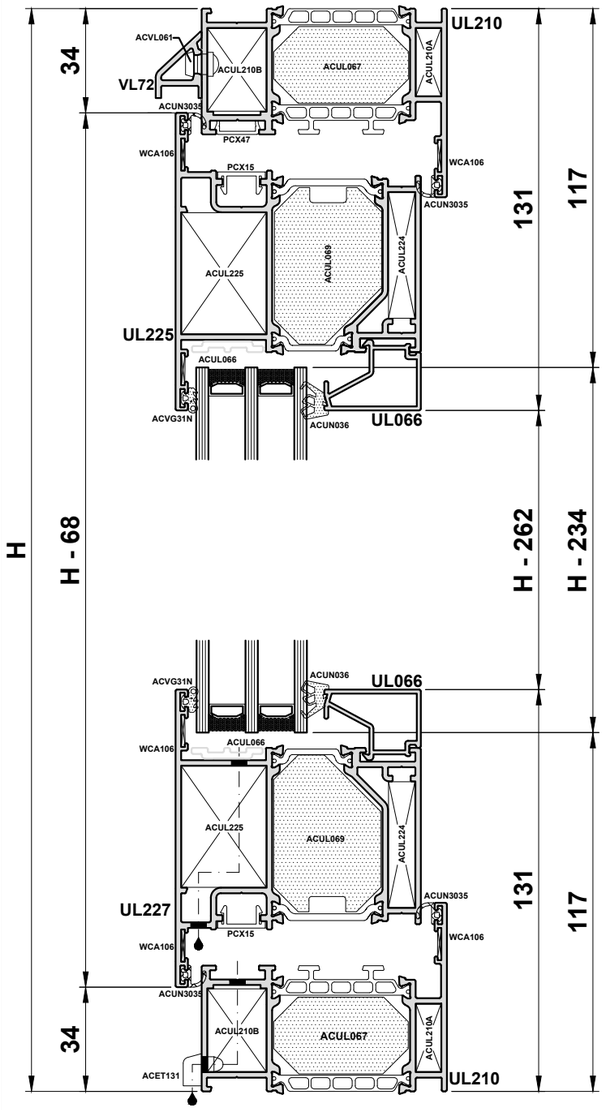

PROFILE CUTTING SCHEDULE

UL210	2		H
UL210	2		W
UL225	4		H - 68
UL225	4		W/2 - 40
UL248	1		H - 110
BEAD	4		H - 263
BEAD	4		W/2 - 197
PCX15	2		H - 106
PCX15	4		W/2 - 74
PCX47	2		H - 82
PCX47	3		W - 82
VL72	2		W/2 - 50.5
UL230/1	2		W/2 - 197

GLASS SIZES

Without Midrail	W/2 - 206	H - 234
With Midrail G1	W/2 - 206	H1 - 161
With Midrail G2	W/2 - 206	H2 - 161

ACCESSORIES

ACCY3570S3	2	Euro Cylinder
ACDV251	2 Pairs	Handles
ACET131	4	Drainage Cap
ACUN3035	4 x W & 6 x H	Flipper Gasket
ACUL064	8 (+8 when using midrail)	Glass Packers
ACUL067	2 x W & 2 x H	Outer Frame Foam
ACUL068	2 x W & 4 x H	Sash Foam
ACUL210A	4	Outer Frame Cleat
ACUL210B	4	Outer Frame Cleat
ACUL224	8	Sash Cleat
ACUL225	8	Sash Cleat
ACUL244	1 Pair	UL248 End Cap
ACUL250	6	Hinge
ACULXXX	1	Lift Lever/ Slam / Keywind fingerbolt lock
ACUL844	1	Fingerbolt
LOCK RODS	2	Lock rods for fingerbolt
ACUL390	2	Fingerbolt Keeps
ACUL242	2	Fingerbolt Guides
ACUN036	2 x W & 4 x H	Wedge Gasket
ACVG31N	2 x W & 4 x H	E Gasket
ACVL059	2 Pairs	VL72 End Cap
ACVL061	4(W/300)	VL72 Rivet
WCA106	24	Chevrons

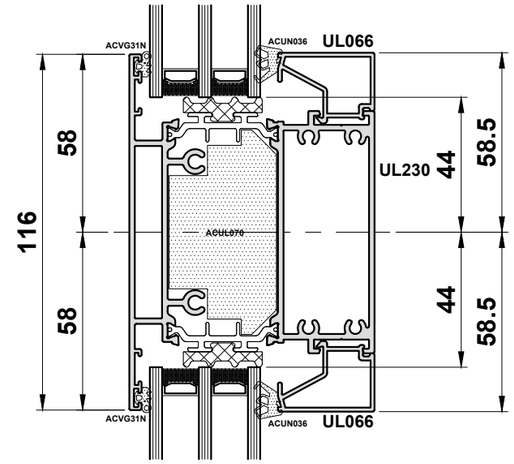

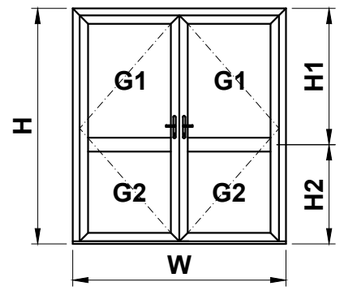

ACUL070	1W	UL230 Foam
ACUL299	4	Bracket
ACUN036	2W	Wedge Gasket
ACUN3512	8	Screws
ACVG31N	2W	E Gasket

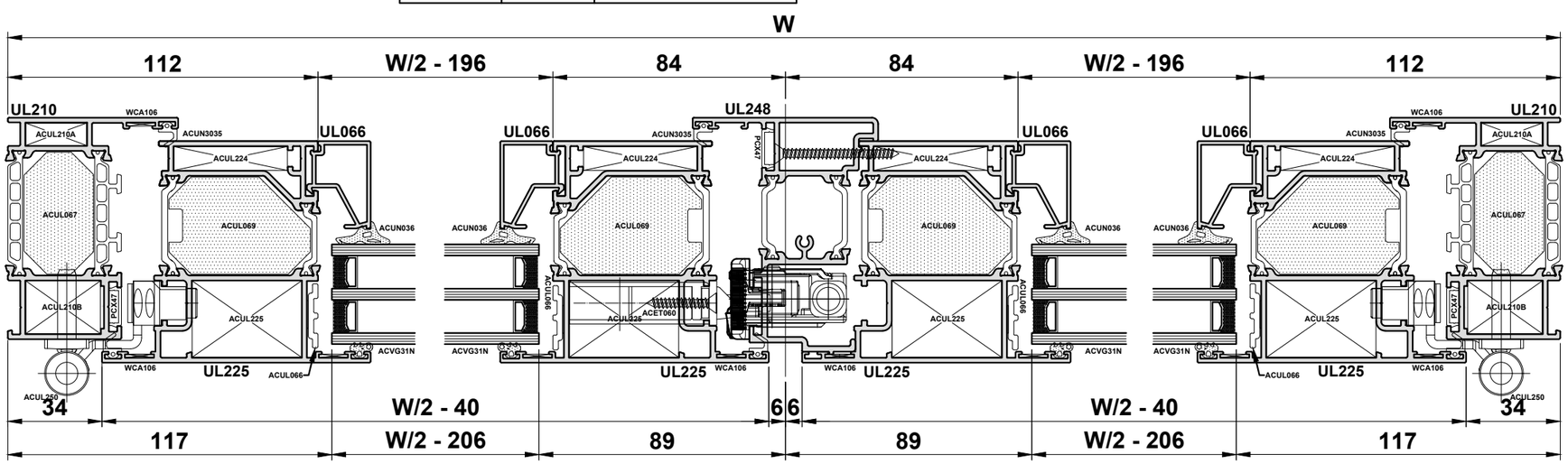

Do Not Scale From This Drawing