Main Index

Continued on next page

Main Index

E INT

Construction Drawings

F INT

Sawing Tables

Specification

DATE	PAGE	DESCRIPTION
15/02/23	**A05**	**Sound test results added.**
	A15	**INT252 frame extension added.**
	A18 & A29	**INT273, INT276, INT277 & INT475 beads for 10mm glazing added.**
	A23	**INT324 interlock cap, INT353 & INT355 couplers added.**
	A24	**INT380 & INT381 bay poles added.**
	B11	**ACINT237 & ACINT238 changed to kits.**
12/12/24	**A07, A14**	**INT232 Screwport added**
	A10, A15, A23	**INT325, INT338 added**
	A11, A22	**INT371 added**
	B07	**ACCY3530NKTT added**
	B11	**ACINT235 added**
	B24	**ACW20166 added**
	B16	**ACINT335 added**
	B15	**ACINT315 added**
	B22	**ACSIN510,511,512 sliding door system kits added**
	C23, C25, C27, C28, C30, C32, C34, C36, C39, C41, C49, C46, C49, C51, C53	**INT325 added**
	E05	**Crimping instructions for INT325 added**
	E17, E18	**INT325 and ACSIN510,511,512 sliding door system mounting instructions added**
	E10	**ACW20166 door lock installation instructions added**
	E16	**ACINT314 door stop position for sliding doors added**
	E21	**ACINT335 lock installation detail added**
	F15	**Cutting Information - Single Sliding Door with ACSIN510, 511, 512 System**

Specification

GENERAL DESCRIPTION

Our "AluSpace Interior Screen" system is the perfect solution for dividing living spaces with a run through floor finish, allowing high levels of natural light to flood between rooms and maximising the aesthetics.

The aluminium steel-look interior screens and doors provide an elegant, versatile and slim sightline design suitable for both traditional and modern homes. Ideal for renovation works, but exceptional also for contemporary residential new builds and commercial projects.

Manufactured to bespoke requirements and offered as a sliding, pivoting or hinged door as well as a fixed interior screen available in a huge range of colours.

PROFILE SPECIFICATION

The door frames are constructed of aluminium alloy extrusion to BS EN 755-9 and BS EN 12020, extruded to 6063 T6 alloy.

RECOMMENDED DESIGN DOOR LIMITATIONS

Hinged Doors

Door Sashes:

Maximum Width: 900mm
Minimum Width: 400mm
Maximum Height: 2200mm
Maximum Weight: 60kg

Sliding Doors

Door Sashes:

Maximum Width: 1200mm
Minimum Width: 400mm
Maximum Height: 2500mm
Maximum Weight: 100kg (with 2 x ACINT313 rollers)

Pivot Doors

Door Sashes:

Maximum Width: 2000mm
Minimum Width: 400mm
Maximum Height: 2500mm
Maximum Weight: 100kg

Fixed Screens:

Please see table on page D07.

Fixed screen sizes are based on a coupler limit at 0.8kN/m.
Size limits can vary depending on application and the category of building.
Please refer to Approved Document K and CWCT for further information on the required loading for your project.

For advise on screen and door sizes outside of the recommended design limitations, please contact the Technical Department at Smart Systems Ltd Tel: 01934 876100

Specification

GENERAL MANUFACTURING

Outerframes and sashes are made by cutting the frame profiles with accurate 45° mitred ends using Tungsten Carbide Tipped Saw Blades, operating at approximately 3000 rpm.

The corners are joined using crimping cleats to form a cold forged corner joint (made by deforming small slugs of metal into the groove of the corner cleat).

The ends of transoms are profiled to fit the frame and fixed using self-tapping screws with a small joint sealant.

On polyester powder coated finishes, great care should be taken to avoid getting gap sealer on visible surfaces and should be removed as soon as possible with a clean cloth.

Care should be exercised when using products not supplied by Smart Systems Ltd as no responsibility can be accepted.

OUTER FRAME MANUFACTURING INFORMATION

The outer frame members are cut with 45° mitred ends to the overall size required, measured to the longest point of the metal.

Prior to corner crimping the centre line position of any transoms should be marked on the outer frame members. Where the transom runs right through, it should be marked out on both jambs in pairs to ensure accurate alignment of the sections.

Using the marked centre line, drill the transom fixing holes using a 4.5mm or 5mm dia. drill bit.

Corners are formed by coating the cut faces to be joined with a suitable small gap sealer. Into the mitred corner insert the cleat glue and the required corner cleats and, where required, the aluminium corner chevrons. The two mitred ends are then brought together and crimped. The small gap sealer ensures a permanent joint, keeps the joint tidy and allows joint movement. After crimping the corner joint, special care should be taken to ensure any excess sealer is removed from painted surfaces.

Transoms are cut with square ends to the sizes calculated on the cutting formula sheets. The ends are then profiled to allow them to fit into the outer frame. Special tooling is available on request to profile the end of transom.

Prior to fixing of transoms, smear the cut ends with a suitable small gap sealer. After fixing, special care should be taken to ensure any excess is cleared from painted surfaces.

Specification

SASH

Corners are formed by coating the cut faces to be joined with a suitable gap sealer. In the mitred corner insert the cleat glue and the required corner cleats and chevrons. The mitred ends are then brought together and crimped. The small gap sealer ensures a permanent joint, keeps the joint tidy and allows joint movement. Care should be taken to ensure any excess sealer is removed from the surfaces.

GLAZING

All beads are cut to suit the glazing aperture on the fully assembled door for glazing either at factory or on site as required.

Where ACINT230, ACINT232 & ACINT430 transom brackets are used, the horizontal beads must be machined over the brackets. Please see pages E06 & E07 for further details.

Glazing can be 6mm, 8mm or 18mm by selecting the relevant bead & gasket.

Please note glazing panels can be ordered through Smart Systems at the following link:

https://smartdoorbuilder.co.uk/

INSTALLATION

Please refer to relevant parts of BS 8213-4 for installation guidance. All fixings shall be suitable for the structure and application. Fixings shown in this manual are for illustration only.

ACOUSTIC

Alu Space Sound Test		
Sample Description	Infill	Weighted Soud Reduction Index RW
Fixed Screen	8.8	38
	Smart Acoustic Panel(18mm)	36
Single Door with single point lock	8.8 (Noise reduction laminate)	34
Single Door with multi-point lock	8.8	37

For other glass performances, please contact the Technical Department at Smart Systems Ltd
Tel: 01934 876100contact technical department.

AluSpace Interior Screen

PROFILES : TECHNICAL INFORMATION

Number	Picture	Page	Perim. mm	Mec. mm	Ix(cm4) wx(cm3)	Iy(cm4) wy(cm3)	Length	Pack pr.	MF	SA	KL	HP	M
INT210	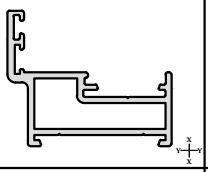	A14	196	61	4.04 / 1.83	1.42 / 1.18	6.5	1	✓		✓	✓	
INT218	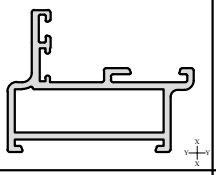	A14	189	62	3.19 / 1.41	1.16 / 0.99	6.5	1	✓		✓	✓	
INT220	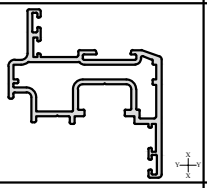	A14	286	160	8.56 / 3.27	3.89 / 1.64	6.5	1	✓		✓	✓	
INT230	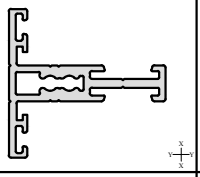	A15	199	50	2.38 / 1.04	0.82 / 0.50	6.5	1	✓		✓	✓	
INT232N	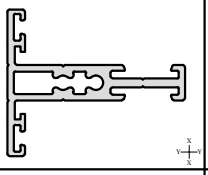	A15	209	50	3.43 / 1.33	0.83 / 0.50	6.5	1	✓		✓	✓	
INT238	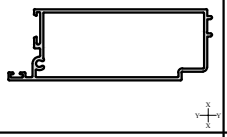	A16	304	176	8.94 / 4.91	43.12 / 8.68	6.5	1	✓		✓	✓	
INT249	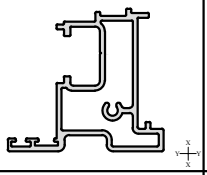	A15	255	84	6.97 / 2.64	4.46 / 2.25	6.5	1	✓		✓	✓	
INT250		A17	90	40	- / -	- / -	6.5	1	✓		✓	✓	
INT252	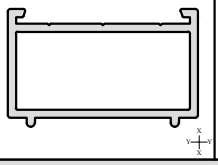	A17	127	47	0.9 / 0.82	2.68 / 1.53	6.5	1	✓		✓	✓	

A = Outside
B = Inside

MF = Mill Finish
SA = Silver Anodised
KL = Basic Colour
HP = Special Colour
M = Dual Colour

AluSpace Interior Screen

PROFILES : TECHNICAL INFORMATION

Number	Picture	Page	Perim. mm	Mec. mm	Ix(cm4) / wx(cm3)	Iy(cm4) / wy(cm3)	Length	Pack pr.	MF	SA	KL	HP	M
INT255		A17	224	148	50.11 / 10.02	0.19 / 0.41	6.5	1	✓		✓	✓	
INT256	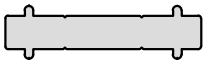	A17	94	14	2.30 / 1.31	0.08 / 0.16	6.5	1	✓		✓	✓	
INT257	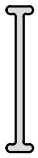	A17	71	-	0.46 / 0.33	0.00 / 0.01	6.5	1	✓				
INT270	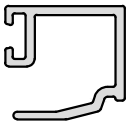	A20	108	29	- / -	- / -	6.5	1	✓		✓	✓	
INT271	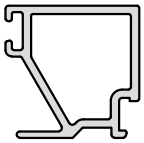	A20	107	37	- / -	- / -	6.5	1	✓		✓	✓	
INT272	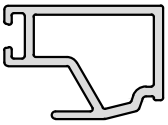	A20	89	34	- / -	- / -	6.5	1	✓		✓	✓	
INT273	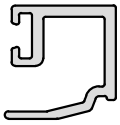	A21	104	28	- / -	- / -	6.5	1	✓		✓	✓	
INT274	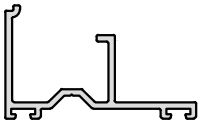	A18	199	25	2.66 / 1.01	0.65 / 0.85	6.5	1	✓		✓	✓	
INT275	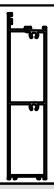	A18	426	292	15.83 / 8.95	152.95 / 20.56	6.5	1	✓		✓	✓	

A = Outside
B = Inside

MF = Mill Finish
SA = Silver Anodised
KL = Basic Colour
HP = Special Colour
M = Dual Colour

ISSUED: March 2025

Number	Picture	Page	Perim. mm	Mec. mm	Ix(cm4) wx(cm3)	Iy(cm4) wy(cm3)	Length	Pack pr.	MF	SA	KL	HP	M
INT276	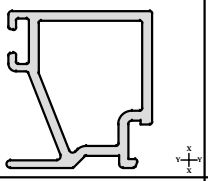	A21	104	36	- / - / -	- / - / -	6.5	1	✓		✓	✓	
INT277	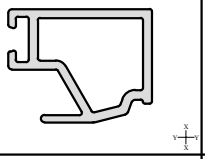	A21	85	33	- / - / -	- / - / -	6.5	1	✓		✓	✓	
INT280	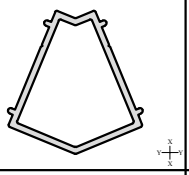	A19	133	54	3.51 / 1.66	2.60 / 1.38	6.5	1	✓		✓	✓	
INT281	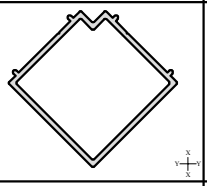	A19	175	95	7.04 / 2.45	7.59 / 2.64	6.5	1	✓		✓	✓	
INT290	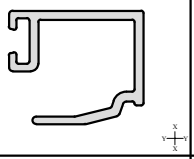	A22	112	31	- / -	- / -	6.5	1	✓		✓	✓	
INT291	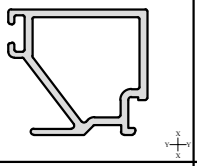	A22	110	39	- / -	- / -	6.5	1	✓		✓	✓	
INT292	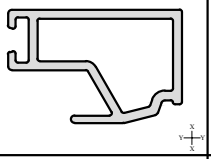	A22	93	36	- / -	- / -	6.5	1	✓		✓	✓	
INT293	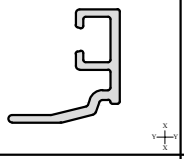	A23	79	19	- / -	- / -	6.5	1	✓		✓	✓	
INT294	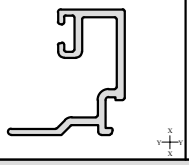	A23	124	27	- / -	- / -	6.5	1	✓		✓	✓	

A = Outside
B = Inside

MF = Mill Finish
SA = Silver Anodised
KL = Basic Colour
HP = Special Colour
M = Dual Colour

AluSpace Interior Screen

PROFILES : TECHNICAL INFORMATION

Number	Picture	Page	Perim. mm	Mec. mm	Ix(cm4) wx(cm3)	Iy(cm4) wy(cm3)	Length	Pack pr.	MF	SA	KL	HP	M
INT295	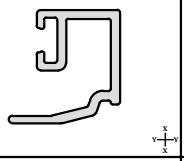	A23	98	24	- / - / -	- / - / -	6.5	1	✓		✓	✓	
INT310	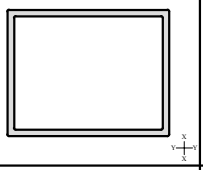	A24	177	128	12.23 / - / 4.89	8.28 / - / 4.25	6.5	1	✓		✓	✓	
INT312	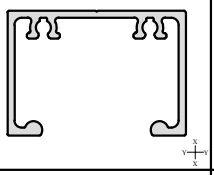	A24	317	141	12.73 / - / 5.09	5.40 / - / 4.09	6.5	1	✓		✓	✓	
INT313	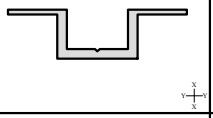	A24	109	55	- / - / -	- / - / -	6.5	1	✓		✓	✓	
INT320	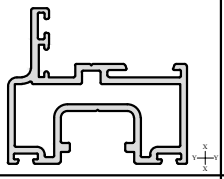	A24	233	70	4.68 / - / 2.21	2.10 / - / 1.58	6.5	1	✓		✓	✓	
INT322		A24	149	82	2.56 / - / 0.98	0.17 / - / 0.50	6.5	1	✓		✓	✓	
INT323	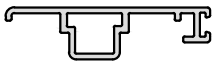	A25	143	63	1.99 / - / 0.81	0.17 / - / 0.46	6.5	1	✓		✓	✓	
INT324	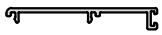	A25	180	51	- / - / -	- / - / -	6.5	1	✓		✓	✓	
INT325	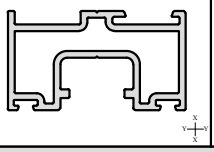	A24	189	53	4.28 / - / 2.12	1.24 / - / 1.12	6.5	1	✓		✓	✓	

A = Outside
B = Inside

MF = Mill Finish
SA = Silver Anodised
KL = Basic Colour
HP = Special Colour
M = Dual Colour

ISSUED: March 2025

Number	Picture	Page	Perim. mm	Mec. mm	Ix(cm4) wx(cm3)	Iy(cm4) wy(cm3)	Length	Pack pr.	MF	SA	KL	HP	M
INT338	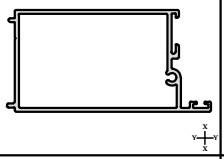	A16	276	160	9.8 — 4.64	24.68 — 6.34	6.5	1	✓		✓	✓	
INT353	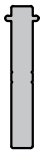	A25	98	21	3.32 — 1.63	0.08 — 0.17	6.5	1	✓		✓	✓	
INT356	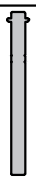	A25	158	75	17.57 — 4.98	0.14 — 0.30	6.5	1	✓		✓	✓	
INT357	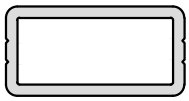	A25	70	-	0.20 — 0.34	0.62 — 0.53	6.5	1	✓				
INT371	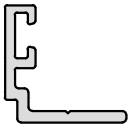	A23	77	20	- — -	- — -	6.5	1	✓		✓	✓	
INT380	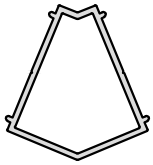	A26	148	58	4.99 — 2.08	3.47 — 1.65	6.5	1	✓		✓	✓	
INT381	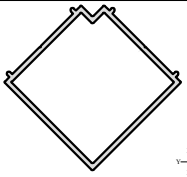	A26	195	105	10.21 — 3.15	10.83 — 3.34	6.5	1	✓		✓	✓	
INT410	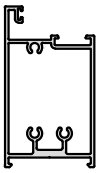	A27	329	161	17.07 — 6.85	40.67 — 11.36	6.5	1	✓		✓	✓	
INT411	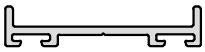	A27	124	22	1.53 — 0.79	0.02 — 0.07	6.5	1	✓		✓	✓	

A = Outside
B = Inside

MF = Mill Finish
SA = Silver Anodised
KL = Basic Colour
HP = Special Colour
M = Dual Colour

Number	Picture	Page	Perim. mm	Mec. mm	Ix(cm4) wx(cm3)	Iy(cm4) wy(cm3)	Length	Pack pr.	MF	SA	KL	HP	M
INT412	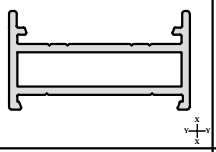	A27	127	38	2.10 / 1.27	0.31 / 0.31	6.5	1	✓		✓	✓	
INT413	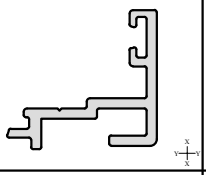	A27	120	31	0.41 / 0.27	0.27 / 0.36	6.5	1	✓		✓	✓	
INT418	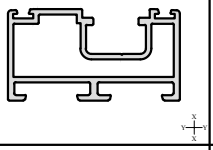	A28	234	91	7.27 / 2.99	1.84 / 1.50	6.5	1	✓		✓	✓	
INT420	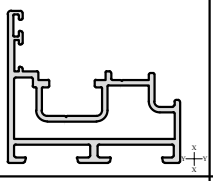	A28	274	166	8.22 / 3.00	3.27 / 2.29	6.5	1	✓		✓	✓	
INT430	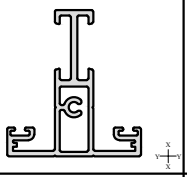	A28	295	73	6.56 / 2.16	3.18 / 1.52	6.5	1	✓		✓	✓	
INT438	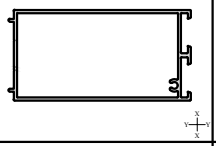	A28	323	188	17.09 / 7.30	51.03 / 11.89	6.5	1	✓		✓	✓	
INT470	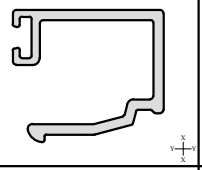	A29	136	38	- / -	- / -	6.5	1	✓		✓	✓	
INT471	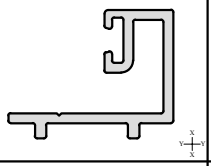	A29	119	25	- / -	- / -	6.5	1	✓		✓	✓	
INT472	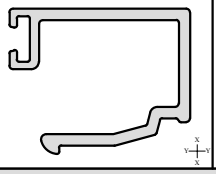	A30	140	40	- / -	- / -	6.5	1	✓		✓	✓	

A = Outside
B = Inside

MF = Mill Finish
SA = Silver Anodised
KL = Basic Colour
HP = Special Colour
M = Dual Colour

ISSUED: March 2025

AluSpace Interior Screen

PROFILES : TECHNICAL INFORMATION

Number	Picture	Page	Perim. mm	Mec. mm	Ix(cm4) wx(cm3)	Iy(cm4) wy(cm3)	Length	Pack pr.	MF	SA	KL	HP	M
INT473	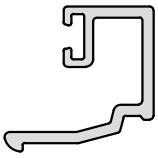	A30	116	28	- — -	- — -	6.5	1	✓		✓	✓	
INT475	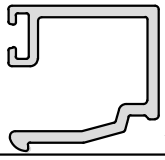	A31	132	37	- — -	- — -	6.5	1	✓		✓	✓	
PCX15	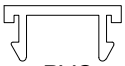 PVC	A32	63	-	- — -	- — -	6.5	1	✓				
PCX41	 PVC	A32	65	-	- — -	- — -	6.5	1	✓				

A = Outside
B = Inside

MF = Mill Finish
SA = Silver Anodised
KL = Basic Colour
HP = Special Colour
M = Dual Colour

Primary Visible Side — — — — — — — — — — — — — — — — Secondary Visible Side — · — · — · — · — · — · — · —

INT210
35mm Heritage Outer Frame

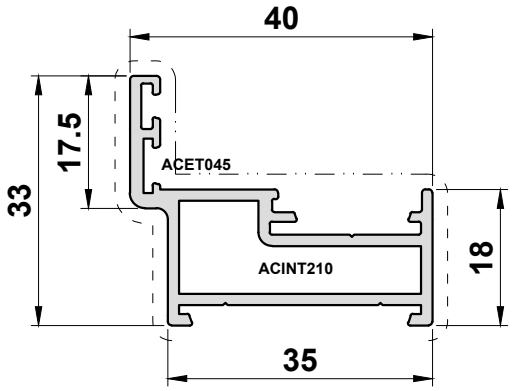

INT218
35mm Heritage Fixed Light

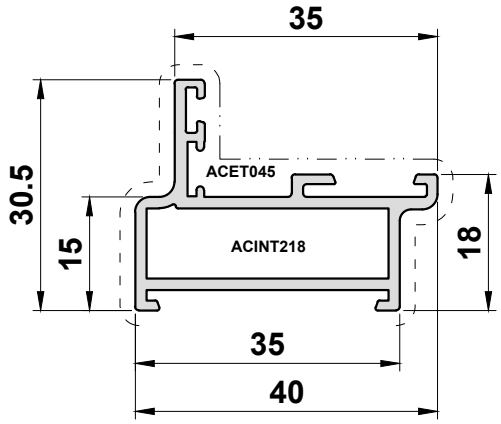

INT220
Heritage Sash

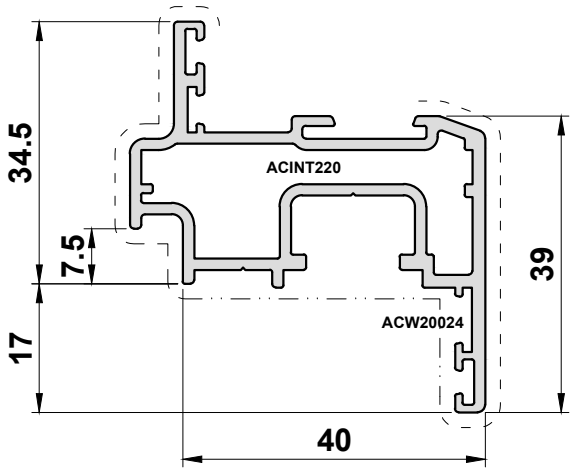

Scale 1:1

Primary Visible Side - - - - - - - - - - - - - - - - - - Secondary Visible Side — · — · — · — · — · — · — · —

INT230
Transom

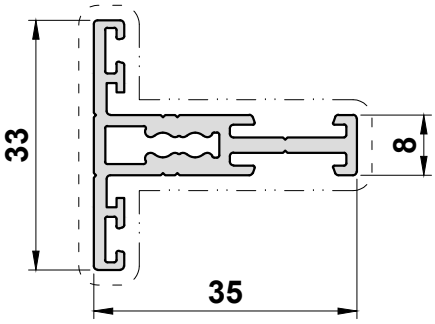

INT232N
Transom

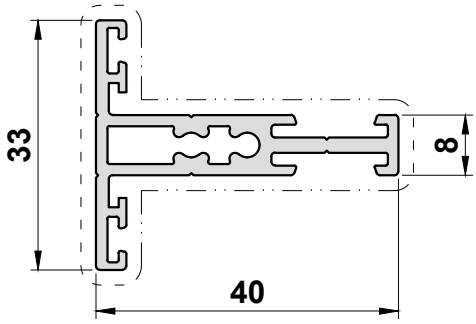

INT249
Meeting Stile

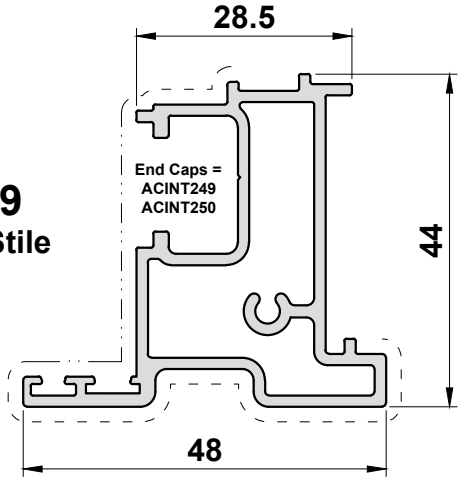

Scale 1:1

Primary Visible Side - - - - - - - - - - - - - - - - - - Secondary Visible Side — · — · — · — · — · — · — · —

INT238
Door Lock Housing

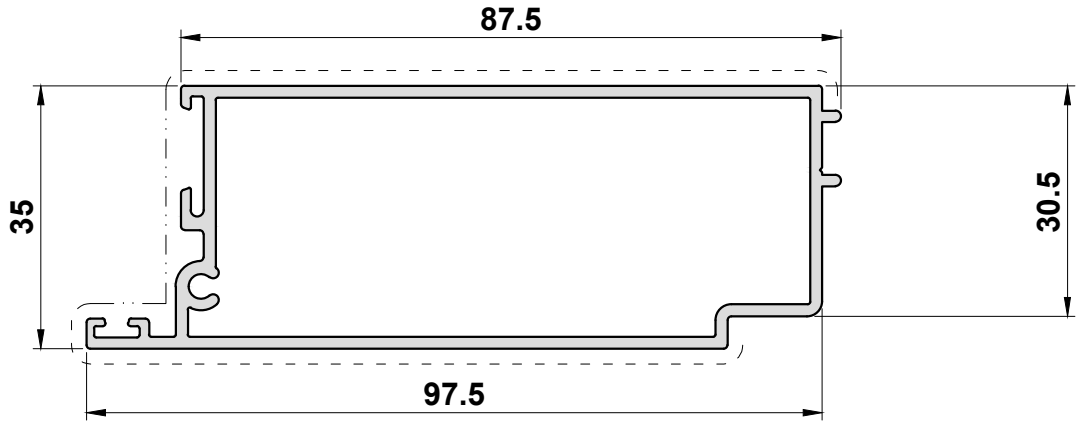

INT338
Door Lock Housing

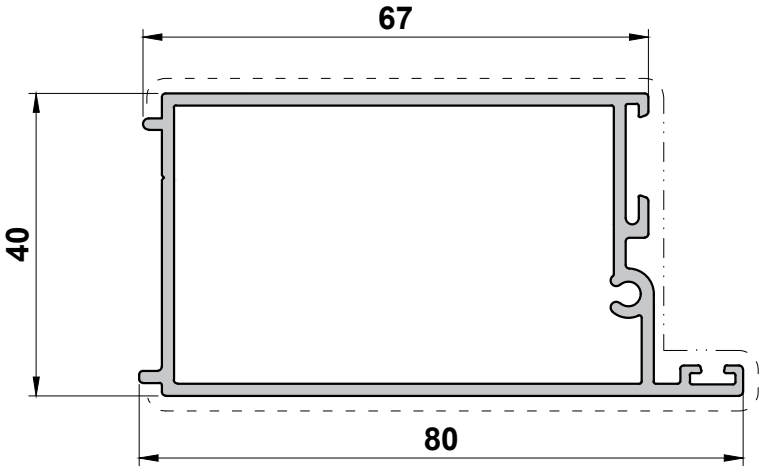

Scale 1:1

Primary Visible Side - - - - - - - - - - - - - - - - - - Secondary Visible Side — · — · — · — · — · — · — · —

INT250
Outer Frame Cap

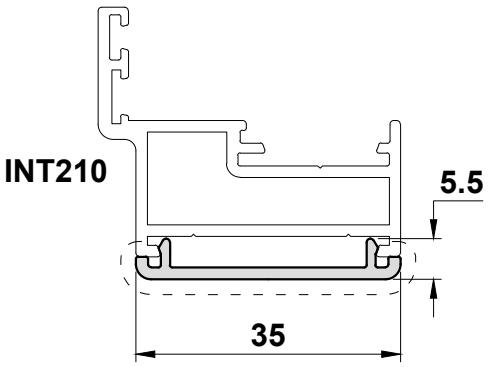

INT252
20mm Frame Extension

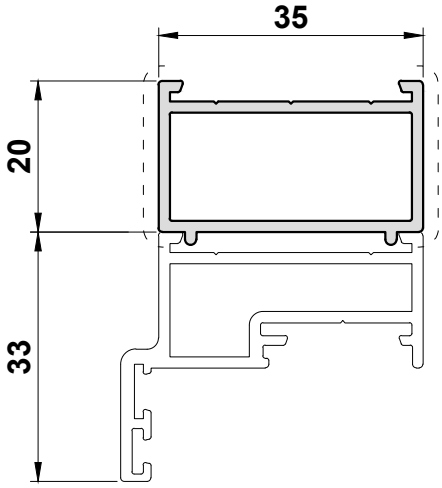

INT255
Vertical Coupler

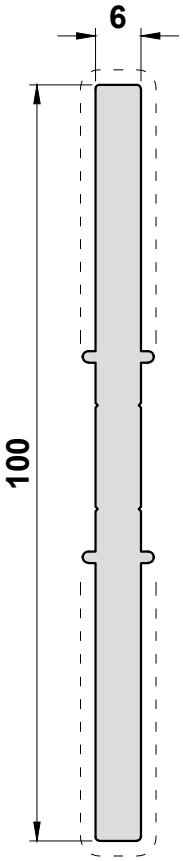

INT256
Horizontal Coupler

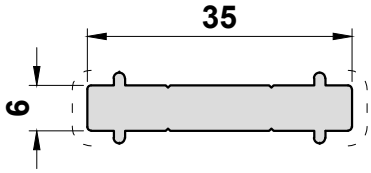

INT257
Concealed Coupler

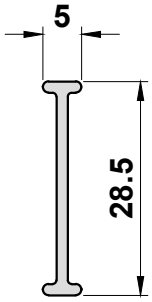

Scale 1:1

Primary Visible Side - - - - - - - - - - - - - - - - - - Secondary Visible Side — · — · — · — · — · — · — · —

INT274
Threshold Adaptor

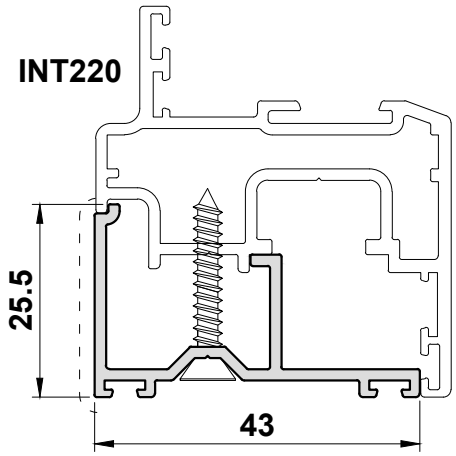

INT275
Deep Bottom Rail

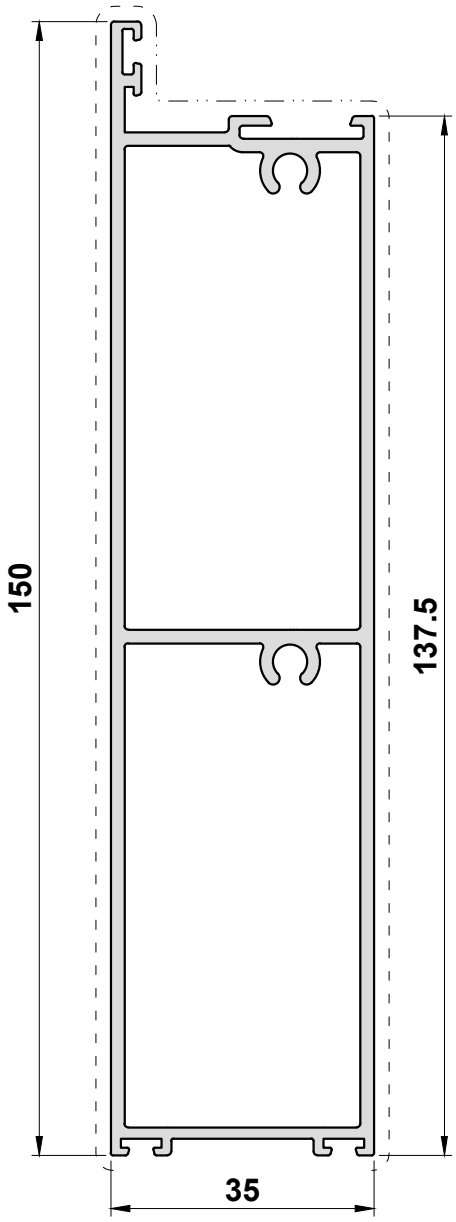

Scale 1:1

Primary Visible Side - - - - - - - - - - - - - - - - - - Secondary Visible Side — · · — · · — · · — · · — · · — · · — · · —

INT280
135° Bay Pole

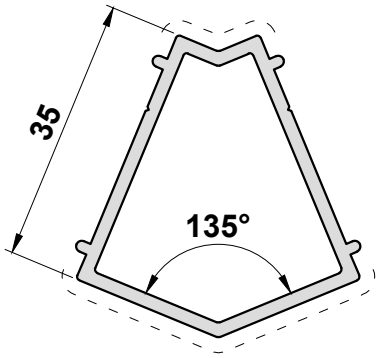

INT281
90° Bay Pole

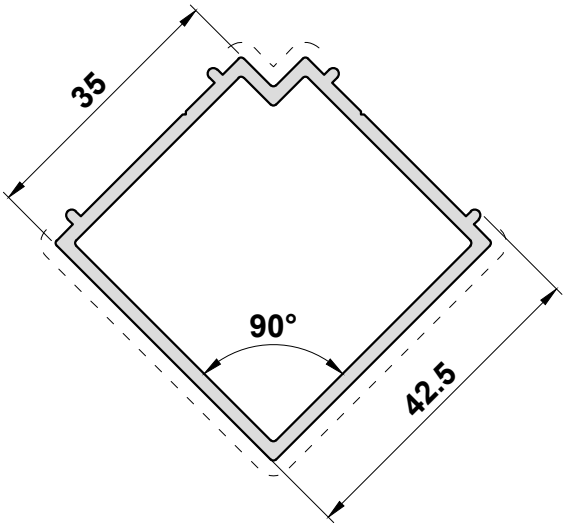

Scale 1:1

Primary Visible Side — — — — — — — — — — — — — — — — Secondary Visible Side — · · — · · — · · — · · — · · — · · — · · —

INT270
Square Bead

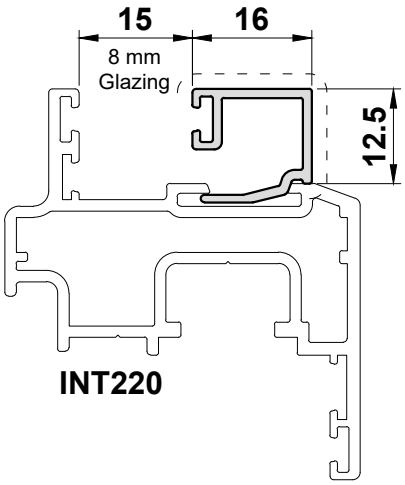

INT271
Square Bead

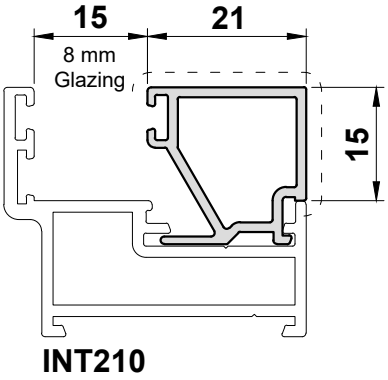

INT272
Square Bead

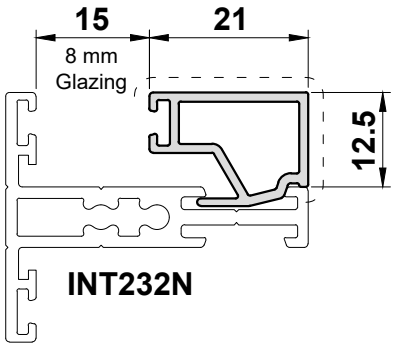

Scale 1:1

Primary Visible Side - - - - - - - - - - - - - - - - - - Secondary Visible Side — · — · — · — · — · — · — · —

INT273
Square Bead

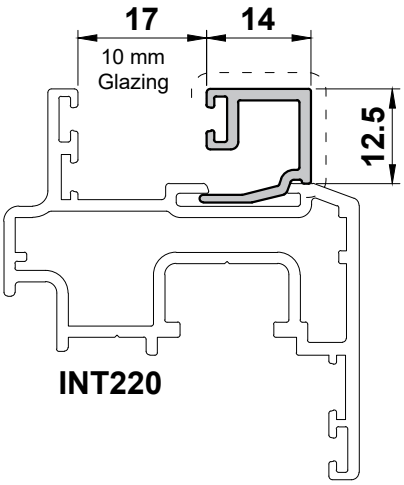

INT276
Square Bead

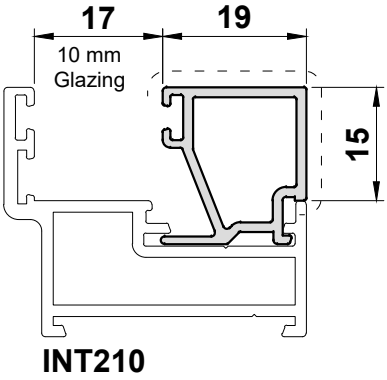

INT277
Square Bead

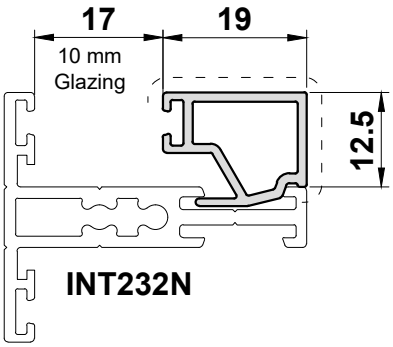

Scale 1:1

Primary Visible Side - - - - - - - - - - - - - - - - - - Secondary Visible Side — · — · — · — · — · — · — · —

INT290
Square Bead

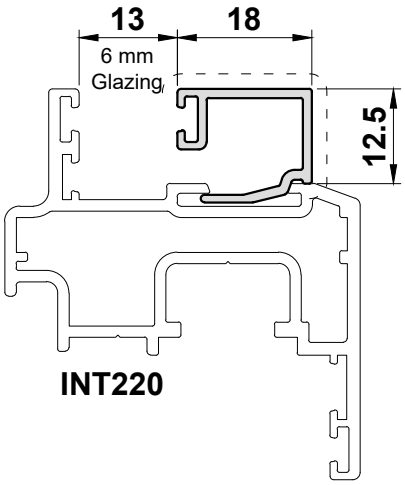

INT291
Square Bead

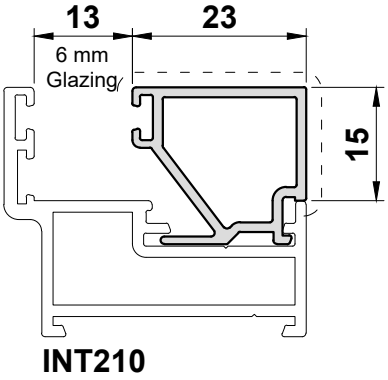

INT292
Square Bead

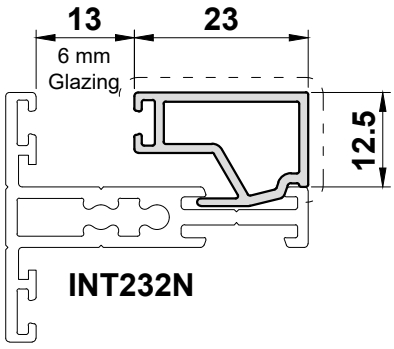

Scale 1:1

Primary Visible Side - - - - - - - - - - - - - - - - - - Secondary Visible Side — · · — · · — · · — · · — · · — · · —

INT293
Square Bead

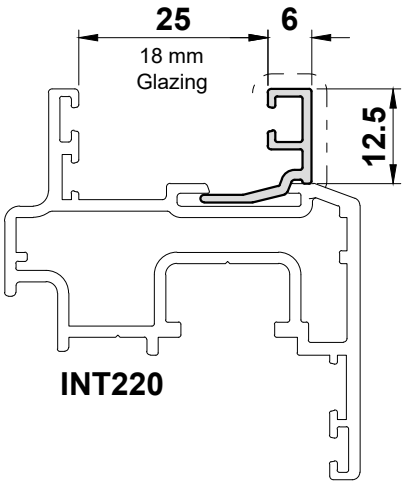

INT294
Square Bead

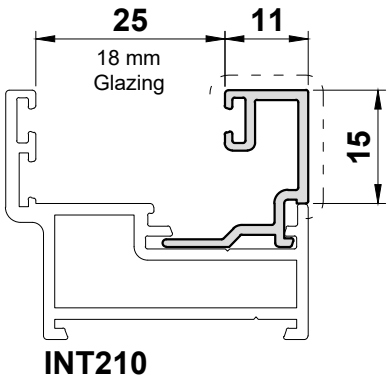

INT295
Square Bead

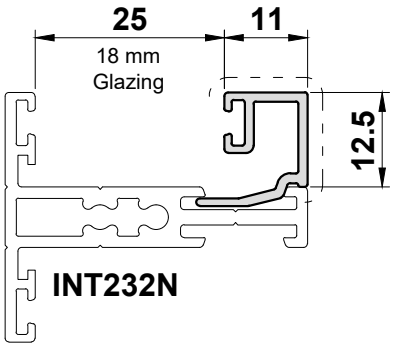

INT371
Rebate Bead

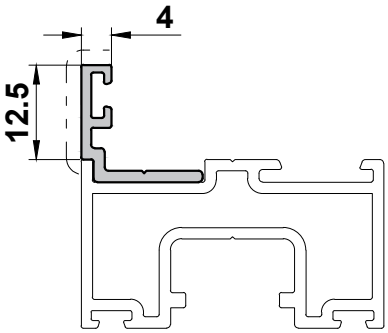

Scale 1:1

Primary Visible Side — — — — — — — — — — — — — — — — Secondary Visible Side — · — · — · — · — · — · — · —

INT310
Fixed Screen Header Bar

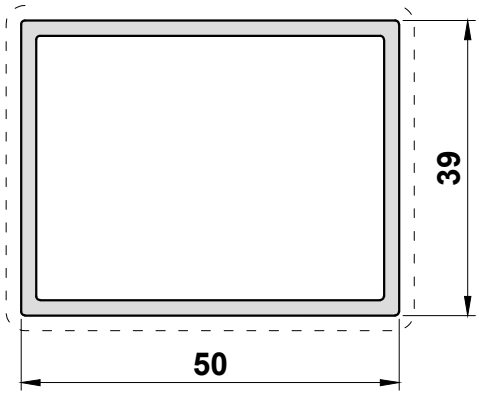

INT312
Top Track

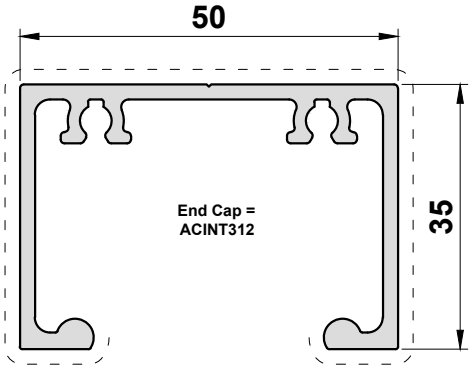

INT320
Stepped Sash

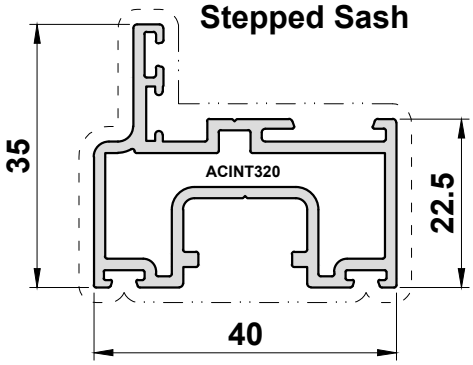

INT325
Sash

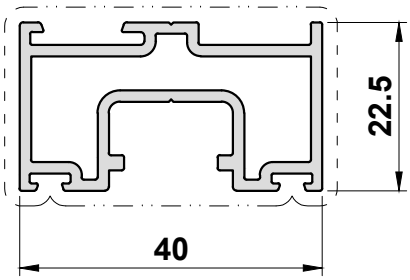

INT322
Sliding Door Interlock

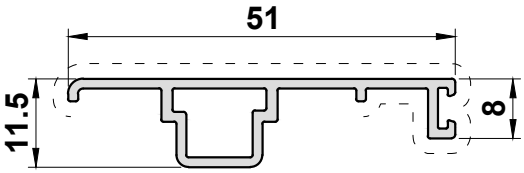

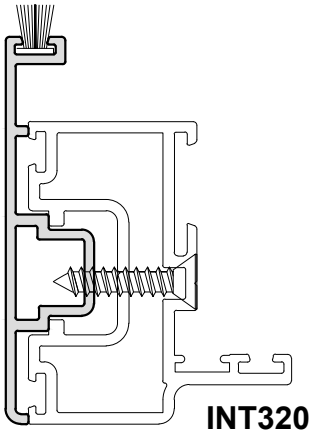

INT320

INT313
Track

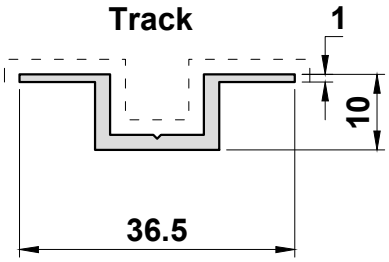

Scale 1:1

Primary Visible Side - - - - - - - - - - - - - - - - - - Secondary Visible Side — · — · — · — · — · — · — · —

INT323
Sliding Door Interlock

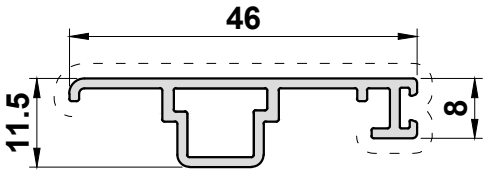

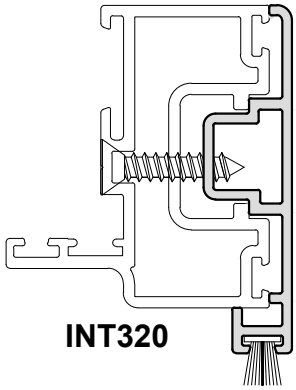

INT324
Outer Frame Cap

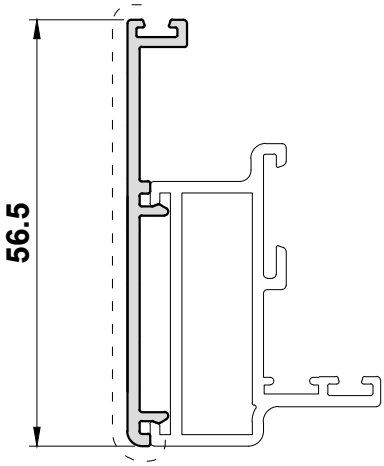

INT353
Coupler

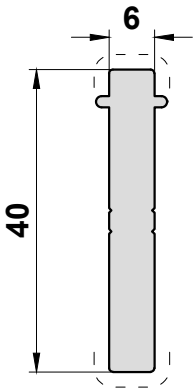

INT356
Coupler

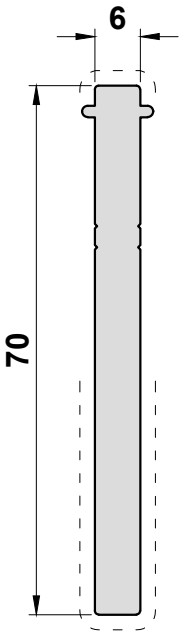

INT357
Concealed Coupler

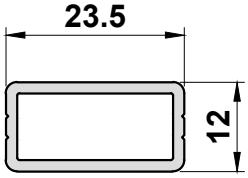

Scale 1:1

Primary Visible Side - - - - - - - - - - - - - - - - - - Secondary Visible Side — · · — · · — · · — · · — · · — · · — · · —

INT380

135° Bay Pole

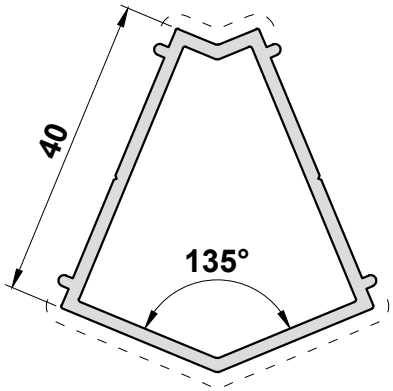

INT381

90° Bay Pole

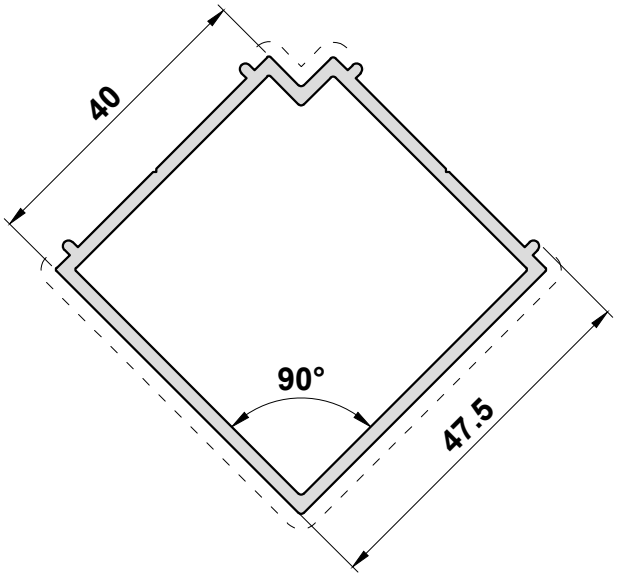

Scale 1:1

Primary Visible Side - - - - - - - - - - - - - - - - - - Secondary Visible Side — · — · — · — · — · — · — · —

INT410
Pivot Door Rail

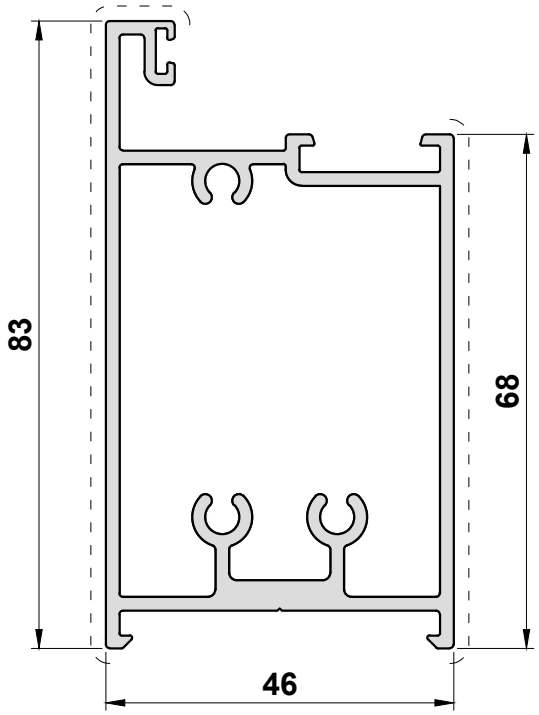

INT411
Woolpile Carrier

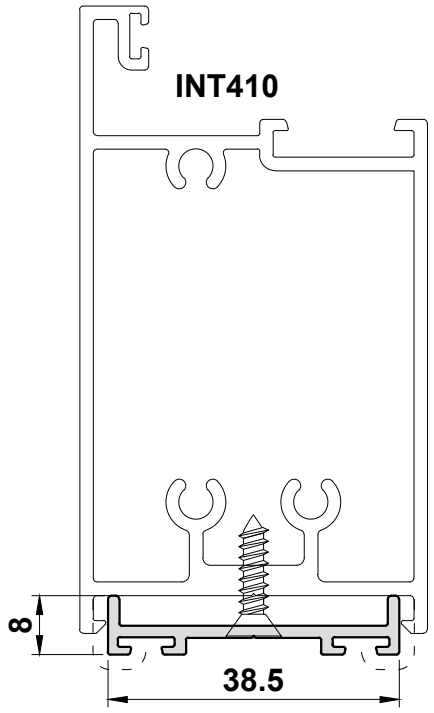

INT412
Pivot Door Frame

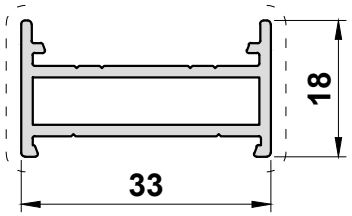

INT413
Upstand Frame

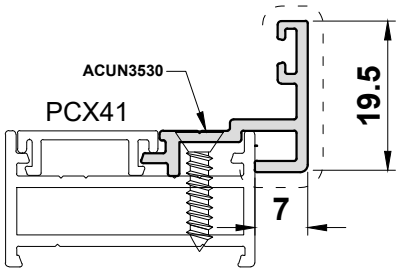

INT430

Scale 1:1

Primary Visible Side - - - - - - - - - - - - - - - - - - Secondary Visible Side —·—·—·—·—·—·—·—

INT418
Pivot Door Stile

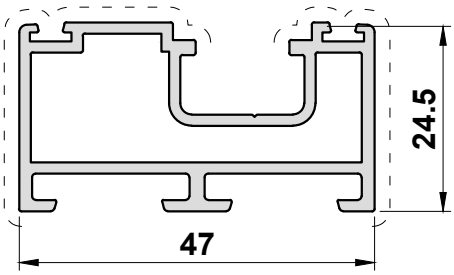

INT420
Pivot Door Stile

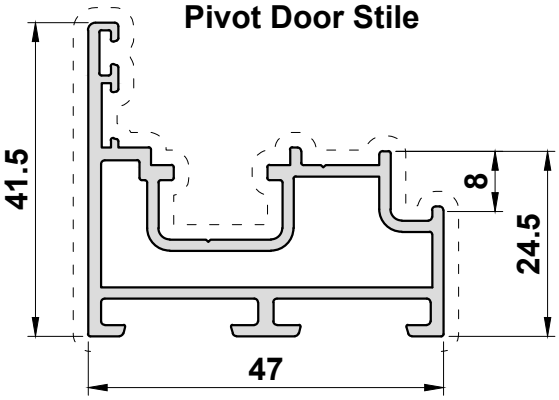

INT430
Transom

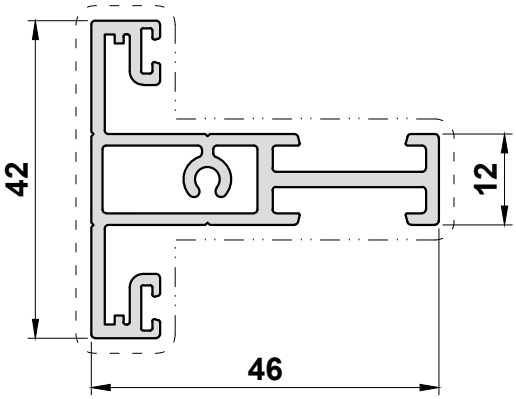

INT438
Pivot Door Lock Housing

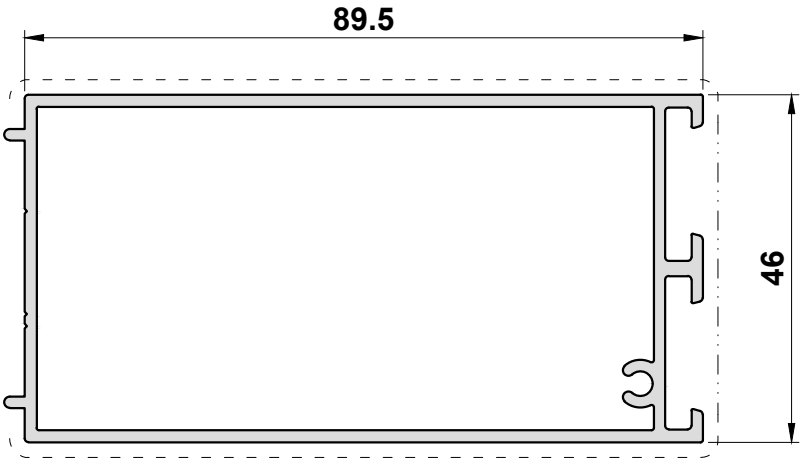

Scale 1:1

Primary Visible Side - - - - - - - - - - - - - - - - - - Secondary Visible Side — · · — · · — · · — · · — · · — · · —

INT470
Square Bead
(Pivot Door)

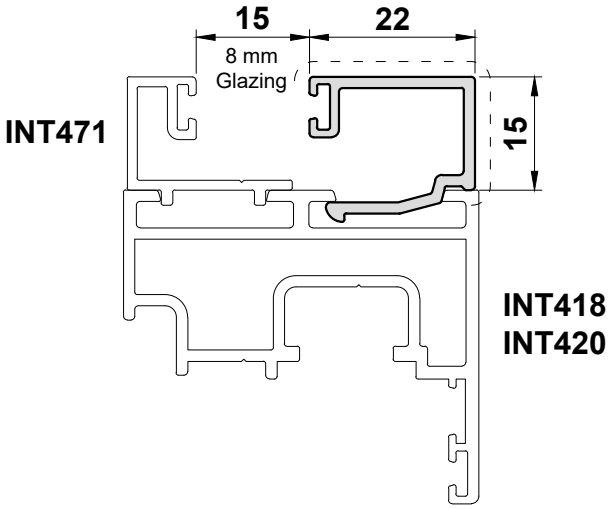

INT471
External Square Bead
(Pivot Door)

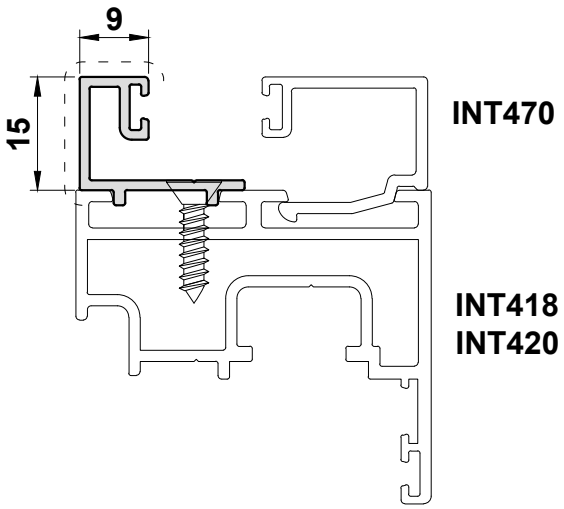

Scale 1:1

Primary Visible Side - - - - - - - - - - - - - - - - - - Secondary Visible Side — · · — · · — · · — · · — · · — · · — · · —

INT472

Square Bead
(Pivot Door)

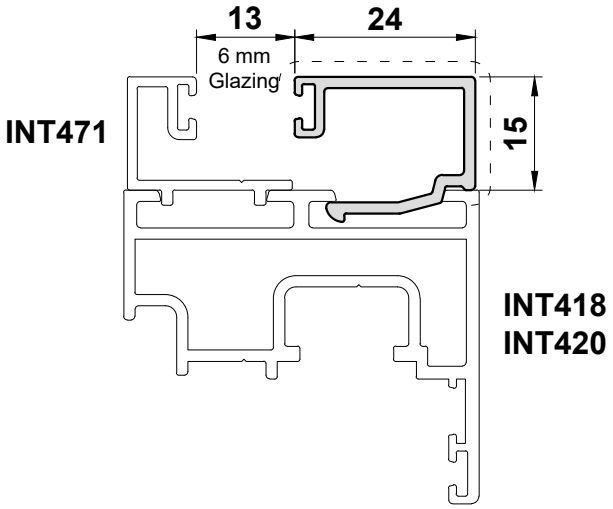

INT473

Square Bead
(Pivot Door)

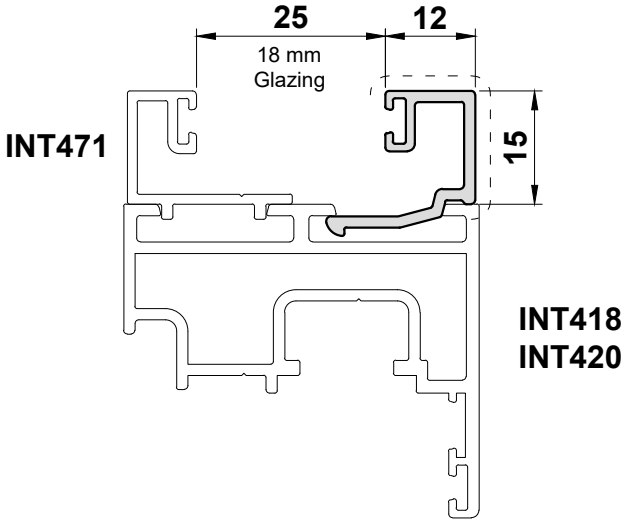

Scale 1:1

Primary Visible Side - - - - - - - - - - - - - - - - - - Secondary Visible Side — · · — · · — · · — · · — · · — · · — · · —

INT475

Square Bead
(Pivot Door)

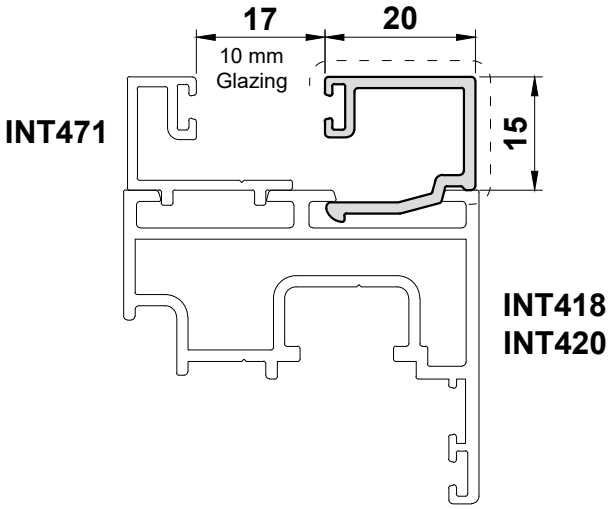

Scale 1:1

Primary Visible Side - - - - - - - - - - - - - - - - - - Secondary Visible Side — · · — · · — · · — · · — · · — · · — · · —

PCX15
Sash Infill

INT220

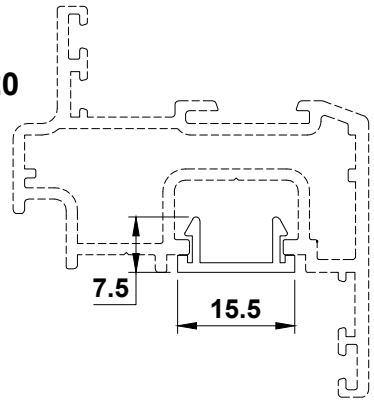

PCX41
Outer Frame Infill

INT210

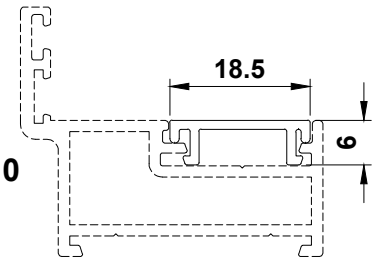

Scale 1:1

Section B

Accessories

Photos & Drawings

Countersunk Screws

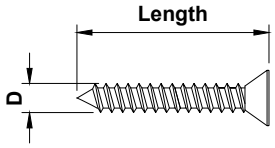

Gauge	'D' (mm)
No.6	3.5
No.7	3.8
No.8	4
No.10	5
No.12	6

Part Number	Gauge	X	Length	Description	Box Qty.
ACUN3530	No.6	X	5/8"	Countersunk Pozi Self Tapper S/S	100
MUA025SSZ	No.6	X	1"	Countersunk Pozi Self Tapper S/S	100
ACET067	No.7	X	1/2"	Countersunk Pozi Self Tapper S/S	100
ACET060	No.7	X	1"	Countersunk Pozi Self Tapper S/S	100
ACET066	No.7	X	1 1/2"	Countersunk Pozi Self Tapper S/S	100
MUA067SSZ	No.7	X	2"	Countersunk Pozi Self Tapper S/S	100
ACUN3544	No.7	X	3/4"	Countersunk Pozi Self Tapper S/S	100
ACET064	No.8	X	5/8"	Countersunk Pozi Self Tapper S/S	100
ACUN3512	No.8	X	1 1/4"	Countersunk Pozi Self Tapper S/S	100
ACUN3513	No.8	X	1 3/4"	Countersunk Pozi Self Tapper S/S	100
ACET072	No.8	X	2 1/2"	Countersunk Pozi Self Tapper S/S	100
ACET490	4.3mm	X	16mm	Countersunk PH2 Polyamide Screw	1000
ACET290	4.3mm	X	20mm	Countersunk PH2 Polyamide Screw	100
ACET390	4.3mm	X	25mm	Countersunk PH2 Polyamide Screw	200
ACET190	4.3mm	X	45mm	Countersunk PH2 Polyamide Screw	1000
ACVS062	4.3mm	X	65mm	Countersunk PH2 Polyamide Screw	1000
ACET048	No.10	X	3/8"	Countersunk Pozi Self Tapper S/S	100
ACIM062	No.10	X	1 1/4"	Countersunk Pozi Self Tapper S/S	100
ACET062	No.10	X	2"	Countersunk Pozi Self Tapper S/S	100
ACET076	No.10	X	2 1/2"	Countersunk Pozi Self Tapper S/S	100

Pan Head Screws

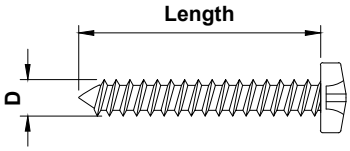

Gauge	'D' (mm)
No.6	3.5
No.7	3.8
No.8	4
No.10	5
No.12	6

Part Number	Gauge	X	Length	Description	Box Qty.
ACET068	No.8	X	3/8"	Pozi Flange AB	100
ACET063	No.8	X	1/2"	Pan Head Self Tapper	100
ACET070	No.8	X	1/2"	Pozi Flange Self Tapper S/S	100
ACUN3535	No.8	X	5/8"	Pan Head Pozi S/S	100
ACET099	No.8	X	3/4"	Pozi Flange Self Tapper S/S	100
ACDR050	4.8mm	X	32mm	Pan Head Pozi S/S	200
PUA028	No.10	X	1"	Pan Head Pozi S/S	100
ACDR052	No.10	X	2"	Pan Head Self Tapper S/S	200
ACET079	No.10	X	2 1/2"	Pan Head Pozi S/S	100
ACW20160	No.12	X	1"	Flange Head Self Tapper S/S	100
ACMC109	6.3mm	X	38mm	DIN7981 - Pan Head Self Tapper	200

Machine Screws

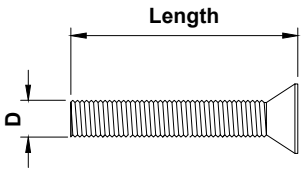

Thread	'D' (mm) Nominal
M4	4
M5	5
M6	6
M8	8
M10	10

Part Number	Thread	X	Length	Description	Box Qty.
ACET122	M4	X	10	CSK Pozi Machine Screw	100
ACET123	M4	X	20	CSK Pozi Machine Screw	100
ACDV264	M4	X	35	CSK Pozi Machine Screw	100
ACSG071	M4	X	40	CSK Pozi Machine Screw	100
ACDV266	M4	X	45	CSK Pozi Machine Screw	100
ACDV262	M4	X	50	CSK Pozi Machine Screw	100
ACDV265	M4	X	60	CSK Pozi Machine Screw	100
ACDR051	M5	X	10	CSK Pozi Machine Screw	100
ACET069	M5	X	12	CSK Pozi Machine Screw	100
HEA132	M5	X	16	CSK Pozi Machine Screw	100
WCA134	M5	X	20	CSK Pozi Machine Screw	100
WCA143	M5	X	25	CSK Pozi Machine Screw	50
ACVS061	M5	X	40	CSK Pozi Machine Screw	100
ACET133	M5	X	50	CSK Pozi Machine Screw	100
ACET220	M5	X	60	CSK Pozi Machine Screw	100
ACET238	M5	X	70	CSK Pozi Machine Screw	100
ACMX861	M5	X	80	DIN965 - CSK Machine Screw	10
ACMX862	M5	X	90	DIN965 - CSK Machine Screw	10
ACUN3503	M6	X	10	CSK Socket Machine Screw	24
ACUN3501	M6	X	13	CSK Flange Socket Machine Screw	48
ACMX852	M6	X	16	DIN965 - CSK Machine Screw	10
HEA390	M6	X	16	CSK Socket Machine Screw	32
ACET235	M6	X	60	CSK Pozi Machine Screw	100
ACET237	M6	X	70	CSK Pozi Machine Screw	100

Glazing Gaskets

Retaining Gasket
Commonly known as an E Gasket.
Retaining gaskets create a seal between the glass and the aluminium profile.

Wedge Gasket
Wedge Gaskets help to hold the bead in place by providing tension between the bead and the glazing unit.

High Line	2mm		ACVG231
			200m
			BL
	3mm		ACVG31
			200m
			BL
	4mm		ACVG131
			100m
			BL
Low Line	2mm		ACET843
			200m
			BL
	3mm		ACET842
			200m
			BL
	4mm		ACET841
			200m
			BL
	4mm	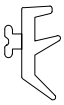	ACET835
			200m
			BL

Thickness	Drawing 1:1	Part number
		Coil length
		Available Colours

PLEASE SEE GLAZING CHART IN SECTION E FOR FURTHER INFORMATION

High Line	3mm		ACVG32
			100m
			BL
	3mm		ACVG32N
			100m
			BL
	4mm		ACVG33
			100m
			BL
	4mm		ACVG33N
			100m
			BL
	5mm		ACVG34
			100m
			BL
	5mm		ACVG34N
			100m
			BL
	6mm		ACVG340
			100m
			BL
	6mm		ACVG340N
			100m
			BL
Low Line	4mm - 3mm		ACW20038
			50m
			BL
	5mm		ACET840N
			200m
			BL

Image	Part Code	Pack	Unit	Application	Colour
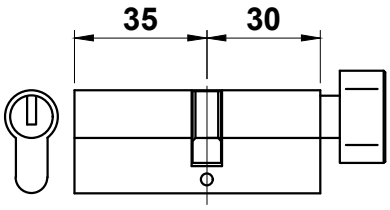	**ACCY3530NKTT** **30/10/25 Cylinder with Thumburn** **ACCY3530NKTT-SL for keyed alike** **Nickle Finish**	**1**	**each**		MF SA KL HP SSC SMC W Z PC
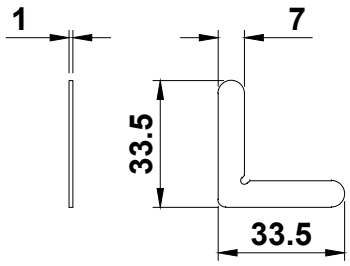	**ACET045** **Stainless Steel Chevron**	**100**	**pack**	**INT210** **INT218**	MF ✓ SA KL HP SSC SMC W Z PC
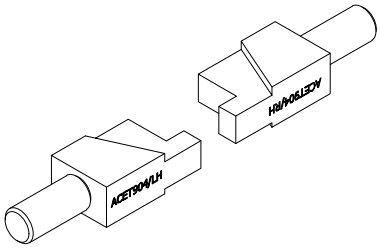	**ACET904** **Punch Tool**	**1**	**pair**	**INT218**	MF ✓ SA KL HP SSC SMC W Z PC
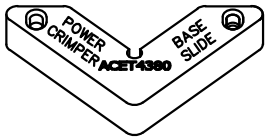	**ACET4380** **Section Packer**	**1**	**each**	**INT325**	MF ✓ SA KL HP SSC SMC W Z PC
	**ACET4381** **Section Packer**	**1**	**each**	**INT325**	MF ✓ SA KL HP SSC SMC W Z PC

T-BARS
ACVG65=2.5mm
ACVG66=3.0mm
ACVL150=4.0mm

Screw (Grub)

MF = Mill Finish
SA = Silver Anodised
KL = Basic Colour
HP = Special Colour
SSC = Smooth Satin Chrome
SMC = Smokey Chrome
PC = Polished Chrome
W = White
Z = Black

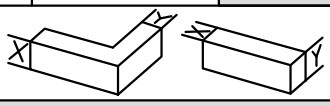

AluSpace Interior Screen

ACCESSORIES : PHOTOS & DRAWINGS

Image	Part Code	Pack	Unit	Application	Colour	
	**ACET4383** **Section Packer**	**1**	**each**	**INT325**	MF SA KL HP SSC SMC W Z PC	✓
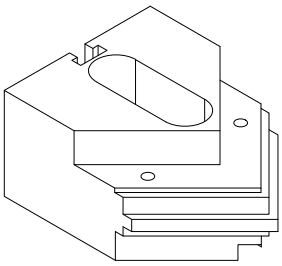	**ACINT201** **V-Block**	**1**	**each**	**INT210** **INT218** **INT220** **INT320**	MF SA KL HP SSC SMC W Z PC	✓
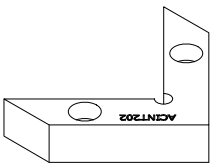	**ACINT202** **Packer**	**1**	**each**	**INT210**	MF SA KL HP SSC SMC W Z PC	✓
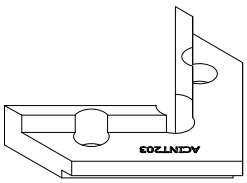	**ACINT203** **Packer**	**1**	**each**	**INT218** **INT320**	MF SA KL HP SSC SMC W Z PC	✓
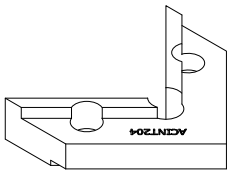	**ACINT204** **Packer**	**1**	**each**	**INT220**	MF SA KL HP SSC SMC W Z PC	✓

T-BARS
ACVG65=2.5mm
ACVG66=3.0mm
ACVL150=4.0mm

Screw (Grub)

MF	**= Mill Finish**	**W**	**= White**
SA	**= Silver Anodised**	**Z**	**= Black**
KL	**= Basic Colour**		
HP	**= Special Colour**		
SSC	**= Smooth Satin Chrome**		
SMC	**= Smokey Chrome**		
PC	**= Polished Chrome**		

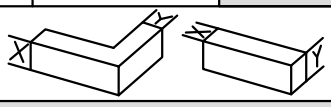

ISSUED: March 2025

AluSpace Interior Screen

ACCESSORIES : PHOTOS & DRAWINGS

Image	Part Code	Pack	Unit	Application	Colour	
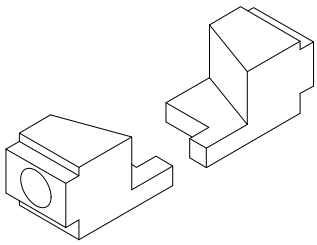	**ACINT206** **Punch Tool**	**1**	**pair**	**INT220**	MF	✓
					SA	
					KL	
					HP	
					SSC	
					SMC	
					W	
					Z	
					PC	
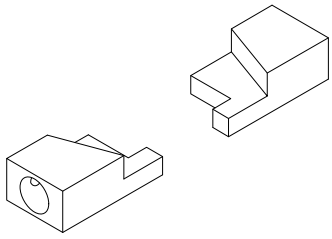	**ACINT207** **Punch Tool**	**1**	**pair**	**INT320**	MF	✓
					SA	
					KL	
					HP	
					SSC	
					SMC	
					W	
					Z	
					PC	
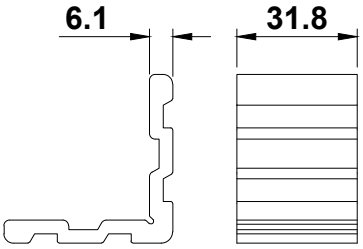	**ACINT210** **Crimping Corner Cleat**	**24**	**pack**	**INT210**	MF	✓
					SA	
					KL	
					HP	
					SSC	
					SMC	
					W	
					Z	
					PC	
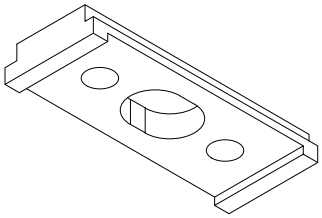	**ACINT211** **Keep Packer**	**1**	**each**	**INT210** **ACINT251**	MF	
					SA	
					KL	
					HP	
					SSC	
					SMC	
					W	
					Z	✓
					PC	
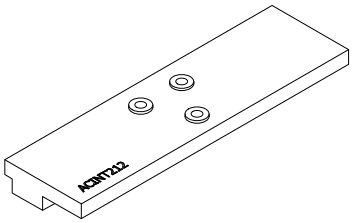	**ACINT212** **Drill Jig**	**1**	**each**	**INT210**	MF	
					SA	
					KL	
					HP	
					SSC	
					SMC	
					W	
					Z	
					PC	

T-BARS
ACVG65=2.5mm
ACVG66=3.0mm
ACVL150=4.0mm

Screw (Grub)

MF = Mill Finish
SA = Silver Anodised
KL = Basic Colour
HP = Special Colour
SSC = Smooth Satin Chrome
SMC = Smokey Chrome
PC = Polished Chrome
W = White
Z = Black

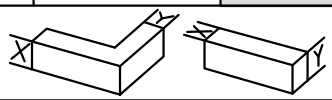

AluSpace Interior Screen

ACCESSORIES : PHOTOS & DRAWINGS

Image	Part Code	Pack	Unit	Application	Colour	
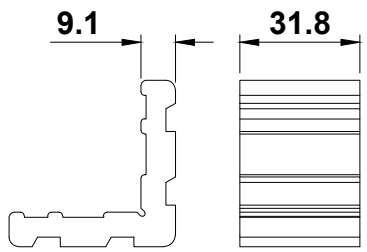	**ACINT218** **Crimping Corner Cleat**	**24**	**pack**	**INT218**	MF	✓
					SA	
					KL	
					HP	
					SSC	
					SMC	
					W	
					Z	
					PC	
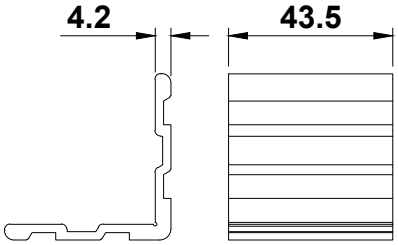	**ACINT220** **Crimping Corner Cleat**	**24**	**pack**	**INT220**	MF	✓
					SA	
					KL	
					HP	
					SSC	
					SMC	
					W	
					Z	
					PC	
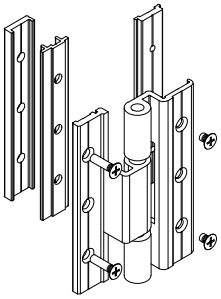	**ACINT221** **Open In Hinge Kit**	**1**	**each**	**INT220**	MF	
					SA	
					KL	✓
					HP	✓
					SSC	
					SMC	
					W	✓
					Z	✓
					PC	
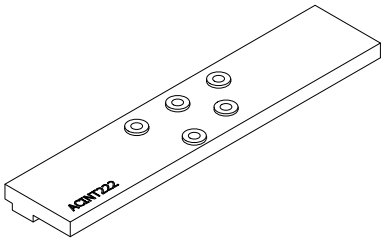	**ACINT222** **Drill Jig**	**1**	**each**	**INT218** **INT220** **INT320**	MF	
					SA	
					KL	
					HP	
					SSC	
					SMC	
					W	
					Z	
					PC	
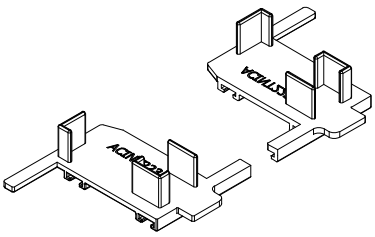	**ACINT223** **End Cap**	**1**	**pair**	**INT220**	MF	
					SA	
					KL	
					HP	
					SSC	
					SMC	
					W	
					Z	✓
					PC	

T-BARS
ACVG65=2.5mm
ACVG66=3.0mm
ACVL150=4.0mm

Screw (Grub)

MF = Mill Finish
SA = Silver Anodised
KL = Basic Colour
HP = Special Colour
SSC = Smooth Satin Chrome
SMC = Smokey Chrome
PC = Polished Chrome
W = White
Z = Black

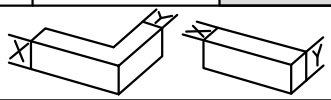

ISSUED: March 2025

AluSpace Interior Screen

ACCESSORIES : PHOTOS & DRAWINGS

Image	Part Code	Pack	Unit	Application	Colour	
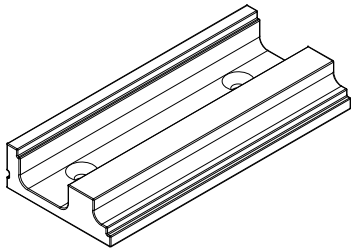	**ACINT224** **Block**	**2**	**pack**	**INT220**	MF	
					SA	
					KL	
					HP	
					EB	
					NP	
					MC	
					W	✓
					Z	
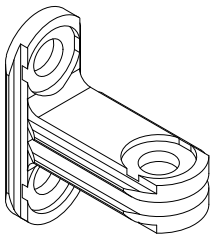	**ACINT230** **Transom Bracket**	**2**	**pack**	**INT218** **INT220** **INT230** **INT232** **INT320**	MF	✓
					SA	
					KL	
					HP	
					EB	
					NP	
					MC	
					W	
					Z	
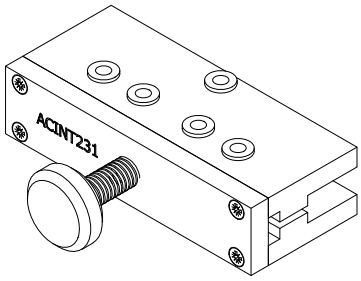	**ACINT231** **Drill Jig**	**1**	**each**	**INT230**	MF	✓
					SA	
					KL	
					HP	
					EB	
					NP	
					MC	
					W	
					Z	
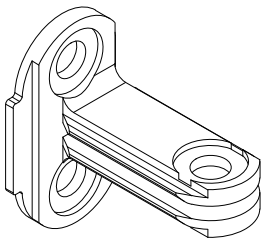	**ACINT232** **Transom Bracket**	**2**	**pack**	**INT210** **INT232**	MF	✓
					SA	
					KL	
					HP	
					EB	
					NP	
					MC	
					W	
					Z	
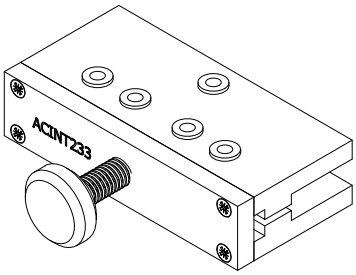	**ACINT233** **Drill Jig**	**1**	**each**	**INT232**	MF	✓
					SA	
					KL	
					HP	
					EB	
					NP	
					MC	
					W	
					Z	

T-BARS
ACVG65=2.5mm
ACVG66=3.0mm
ACVL150=4.0mm

Screw (Grub)

MF = Mill Finish
SA = Silver Anodised
KL = Basic Colour
HP = Special Colour
EB = Enamel Brass
NP = Nickel Plated
MC = Matt Chrome
W = White
Z = Black

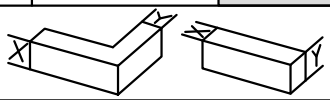

Image	Part Code	Pack	Unit	Application	Colour
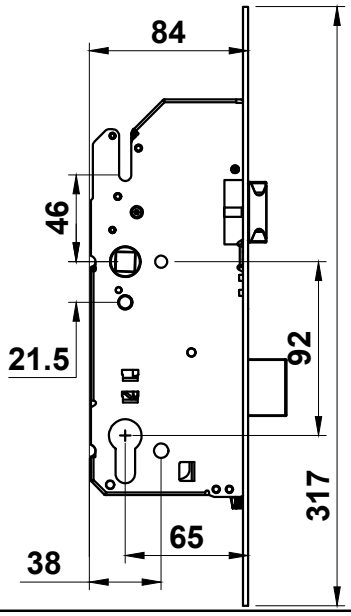	**ACINT235** **Single Point Key Wind Lock** **65mm Backset** **16mm Faceplate**	**1**	**each**	**ACW20065** **ACW20166** **ACCY3035**	MF SA KL HP SSC SMC W Z PC
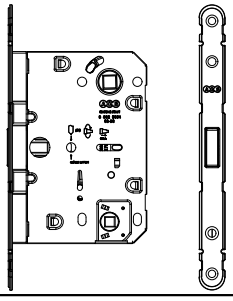	**ACINT237** **Bathroom Lock Kit** **70.5 mm Backset** **Kit Contains:** **ACINT256** Bathroom lock body **ACINT239** Forend Cover **ACINT240** Striker Cover Plate **ACINT241** Latch Cover Tray with Magnet	**1**	**each**	**INT238** **INT438** **ACINT239** **ACINT258**	MF SA KL HP SSC SMC W Z PC
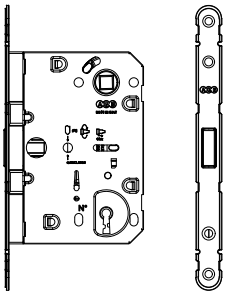	**ACINT238** **Mortice Lock Kit** **70.5 mm Backset** **Kit contains:** **ACINT257** Mortice Lock Body **ACINT239** Forend Cover **ACINT240** Striker Cover Plate **ACINT241** Latch Cover Tray with Magnet **ACINT242** Key for Magnetic Lock	**1**	**each**	**INT238** **INT438** **ACINT239** **ACINT258**	MF SA KL HP SSC SMC W Z PC
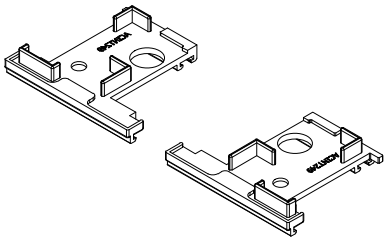	**ACINT249** **Bottom End Cap**	**1**	**pair**	**INT249** **ACET070**	MF SA KL HP SSC SMC W Z PC ✓

T-BARS
ACVG65=2.5mm
ACVG66=3.0mm
ACVL150=4.0mm

Screw (Grub)

MF	**= Mill Finish**	**W**	**= White**
SA	**= Silver Anodised**	**Z**	**= Black**
KL	**= Basic Colour**		
HP	**= Special Colour**		
EB	**= Enamel Brass**		
NP	**= Nickel Plated**		
MC	**= Matt Chrome**		

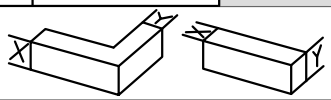

Image	Part Code	Pack	Unit	Application	Colour	
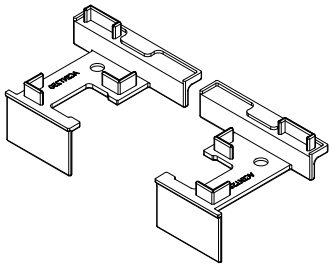	**ACINT250** **End Cap**	**1**	**pair**	**INT249** **ACET070**	MF	
					SA	
					KL	
					HP	
					EB	
					NP	
					MC	
					W	
					Z	✓
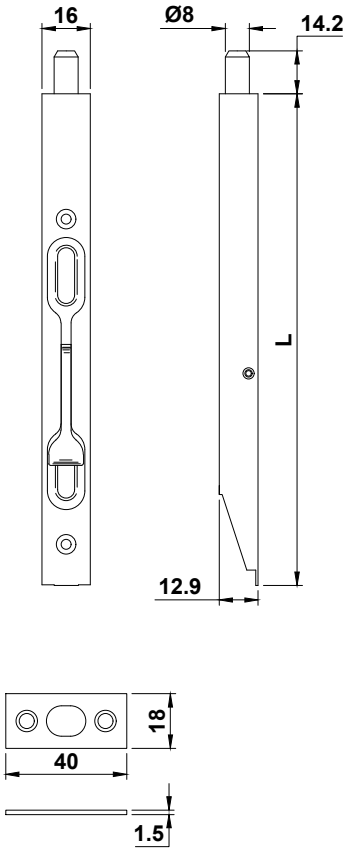	**Flush Bolt** **16 mm Forend** **ACINT251** **L = 162.5mm** **ACINT252** **L = 202.5mm** **ACINT253** **L = 252.5mm** **ACINT254** **L = 302.5mm** **ACINT255** **L = 402.5mm**	**1**	**each**	**INT249** **ACET060**	MF	
					SA	
					KL	
					HP	
					EB	✓
					NP	✓
					MC	✓
					W	
					Z	✓
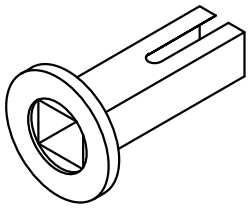	**ACINT258** **Sleeve**	**1**	**pack**	**ACINT258**	MF	
					SA	
					KL	
					HP	
					EB	
					NP	
					MC	
					W	
					Z	

T-BARS
ACVG65=2.5mm
ACVG66=3.0mm
ACVL150=4.0mm

Screen (Grub)

MF = Mill Finish
SA = Silver Anodised
KL = Basic Colour
HP = Special Colour
EB = Enamel Brass
NP = Nickel Plated
MC = Matt Chrome
W = White
Z = Black

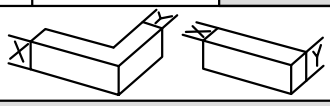

Image	Part Code	Pack	Unit	Application	Colour	
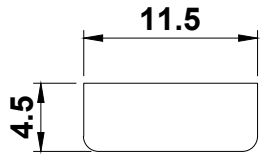	**ACINT260** **11.5 x 4.5mm Bridge Packer**	**100**	**pack**	**INT210** **INT218** **INT220** **INT275**	MF	
					SA	
					KL	
					HP	
					SSC	
					SMC	
					W	
					Z	
					PC	
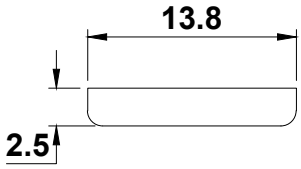	**ACINT261** **13.8 x 2.5mm Bridge Packer**	**100**	**pack**	**INT230** **INT232**	MF	
					SA	
					KL	
					HP	
					SSC	
					SMC	
					W	
					Z	
					PC	
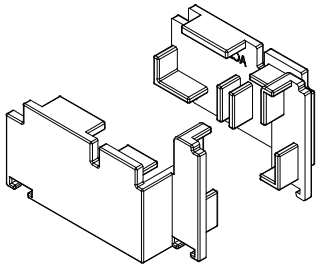	**ACINT274** **End Cap**	**1**	**pair**	**INT274**	MF	
					SA	
					KL	
					HP	
					SSC	
					SMC	
					W	
					Z	✓
					PC	
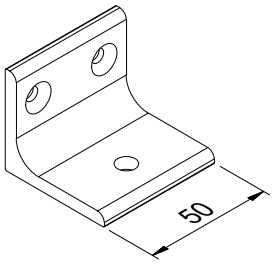	**ACINT311** **Bracket**	**1**	**each**	**INT312**	MF	✓
					SA	
					KL	
					HP	
					SSC	
					SMC	
					W	
					Z	✓
					PC	
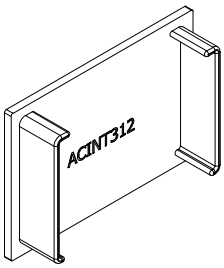	**ACINT312** **End Cap**	**2**	**pack**	**INT312**	MF	
					SA	
					KL	
					HP	
					SSC	
					SMC	
					W	
					Z	✓
					PC	

T-BARS
ACVG65=2.5mm
ACVG66=3.0mm
ACVL150=4.0mm

Screen (Grub)

MF = Mill Finish
SA = Silver Anodised
KL = Basic Colour
HP = Special Colour
SSC = Smooth Satin Chrome
SMC = Smokey Chrome
PC = Polished Chrome
W = White
Z = Black

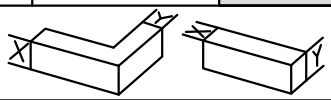

AluSpace Interior Screen

ACCESSORIES : PHOTOS & DRAWINGS

Image	Part Code	Pack	Unit	Application	Colour	
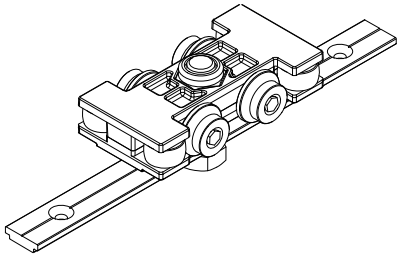	**ACINT313** **Top Carrier Roller**	**1**	**each**	**INT312**	MF	
					SA	
					KL	
					HP	
					SSC	
					SMC	
					W	
					Z	
					PC	
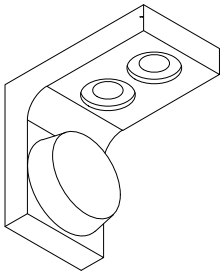	**ACINT314** **Buffer Stop**	**2**	**pack**	**INT312**	MF	
					SA	
					KL	
					HP	
					SSC	
					SMC	
					W	
					Z	✓
					PC	
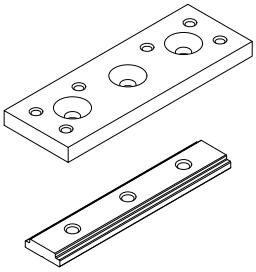	**ACINT315** **Sliding Door System** **ACSIN510/511/512** **mounting plate/bracket**	**1**	**pack**	**INT320** **INT325**	MF	✓
					SA	
					KL	
					HP	
					SSC	
					SMC	
					W	
					Z	✓
					PC	
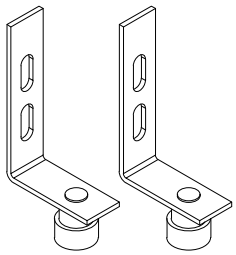	**ACINT316** **Bottom Guide**	**1**	**pair**	**INT313** **INT320** **INT325**	MF	
					SA	
					KL	
					HP	
					SSC	
					SMC	
					W	
					Z	
					PC	
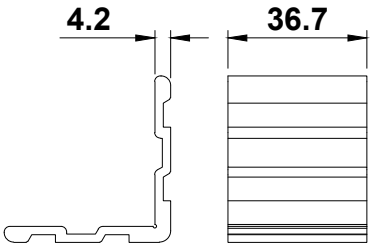	**ACINT320** **Crimping Corner Cleat**	**24**	**pack**	**INT320**	MF	✓
					SA	
					KL	
					HP	
					SSC	
					SMC	
					W	
					Z	
					PC	

T-BARS
ACVG65=2.5mm
ACVG66=3.0mm
ACVL150=4.0mm

Screw (Grub)

MF = Mill Finish
SA = Silver Anodised
KL = Basic Colour
HP = Special Colour
SSC = Smooth Satin Chrome
SMC = Smokey Chrome
PC = Polished Chrome
W = White
Z = Black

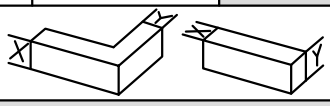

Image	Part Code	Pack	Unit	Application	Colour	
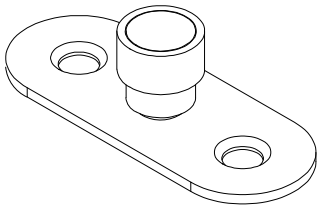	**ACINT325** **Bottom Guide**	**1**	**each**	**INT320**	AB	✓
					SB	
					SC	
					SN	
					PB	
					PN	
					PC	
					MBRZ	
					MB	✓
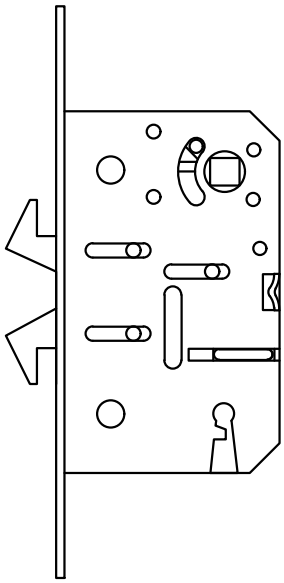	**ACINT335** **Kit includes:** **- Keeps** **- Handles** **- Fingerpull**	**1**	**kit**	**INT325**	AB	
					SB	
					SC	
					SN	
					PB	
					PN	
					PC	
					MBRZ	
					MB	
	**ACINT336** **Keep For ACINT335 Lock**	**1**	**kit**	**INT325**	AB	
					SB	
					SC	
					SN	
					PB	
					PN	
					PC	
					MBRZ	
					MB	
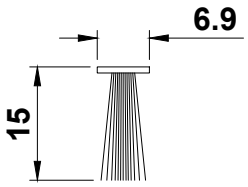	**ACINT411** **6.9mm x 15mm Black Woolpile**	**100**	**m**	**INT411**	AB	
					SB	
					SC	
					SN	
					PB	
					PN	
					PC	
					MBRZ	
					MB	✓

T-BARS
ACVG65=2.5mm
ACVG66=3.0mm
ACVL150=4.0mm

Screen (Grub)

AB = Antique Brass
SB = Satin Brass
SC = Satin Chrome
SN = Satin Nickel
PB = Polished Brass
PN = Polished Nickel
PC = Polished Chrome
MBRZ = Matt Bronze
MB = Matt Black

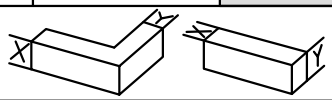

AluSpace Interior Screen

ACCESSORIES : PHOTOS & DRAWINGS

Image	Part Code	Pack	Unit	Application	Colour	
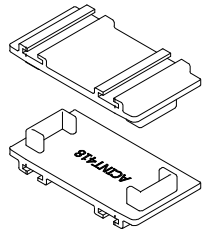	**ACINT418** **End Cap**	**1**	**pair**	**INT418**	AB	
					SB	
					SC	
					SN	
					PB	
					PN	
					PC	
					MBRZ	✓
					MB	
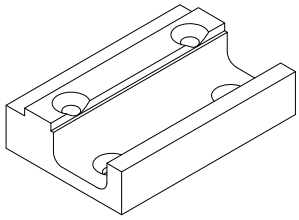	**ACINT419** **Block**	**4**	**pack**	**INT418**	AB	
					SB	
					SC	
					SN	
					PB	
					PN	
					PC	
					MBRZ	
					MB	
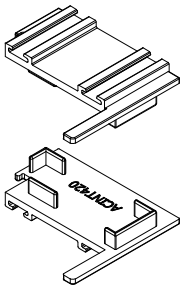	**ACINT420** **End Cap**	**1**	**pair**	**INT420**	AB	
					SB	
					SC	
					SN	
					PB	
					PN	
					PC	
					MBRZ	✓
					MB	
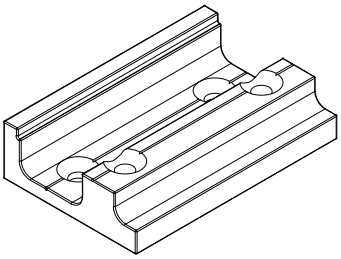	**ACINT421** **Block**	**4**	**pack**	**INT420**	AB	
					SB	
					SC	
					SN	
					PB	
					PN	
					PC	
					MBRZ	
					MB	
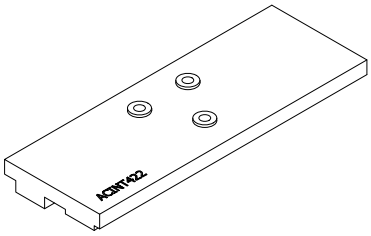	**ACINT422** **Drill Jig**	**1**	**each**	**INT410** **INT418** **INT420**	AB	
					SB	
					SC	
					SN	
					PB	
					PN	
					PC	
					MBRZ	
					MB	

T-BARS
ACVG65=2.5mm
ACVG66=3.0mm
ACVL150=4.0mm

Screw (Grub)

AB = Antique Brass
SB = Satin Brass
SC = Satin Chrome
SN = Satin Nickel
PB = Polished Brass
PN = Polished Nickel
PC = Polished Chrome
MBRZ = Matt Bronze
MB = Matt Black

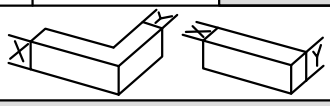

		Pack	Unit	Application	Colour	
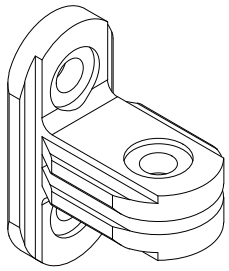	**ACINT430** **Transom Bracket**	**2**	**pack**	**INT420** **INT430**	AB	✓
					SB	
					SC	
					SN	
					PB	
					PN	
					PC	
					MBRZ	
					MB	
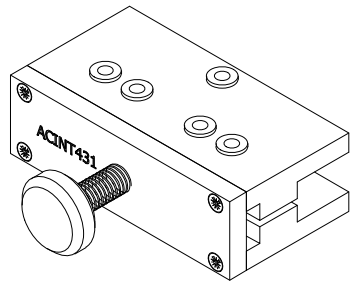	**ACINT431** **Drill Jig**	**1**	**each**	**INT430**	AB	
					SB	
					SC	
					SN	
					PB	
					PN	
					PC	
					MBRZ	
					MB	
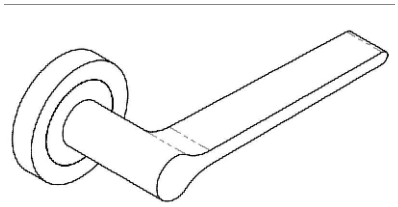	**ACINT501** **Lever On Round Rose Handle** **(Spindle and fixings supplied)**	**1**	**pair**	**ACINT502** **ACINT503**	AB	✓
					SB	✓
					SC	
					SN	✓
					PB	
					PN	✓
					PC	
					MBRZ	✓
					MB	✓
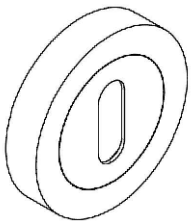	**ACINT502** **Lock Profile Escutcheon on Round Rose** **(Fixings supplied)**	**1**	**each**	**ACINT501**	AB	✓
					SB	✓
					SC	
					SN	✓
					PB	
					PN	✓
					PC	
					MBRZ	✓
					MB	✓
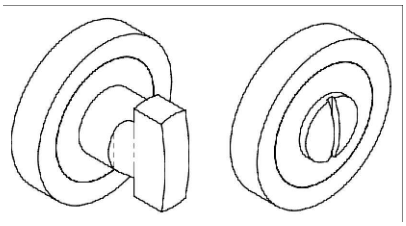	**ACINT503** **Turn & Release on Round Rose** **(Fixings supplied)**	**1**	**set**	**ACINT501** **ACINT258**	AB	✓
					SB	✓
					SC	
					SN	✓
					PB	
					PN	✓
					PC	
					MBRZ	✓
					MB	✓

T-BARS
ACVG65=2.5mm
ACVG66=3.0mm
ACVL150=4.0mm

Screw (Grub)

MF = Mill Finish
SA = Silver Anodised
KL = Basic Colour
HP = Special Colour
SSC = Smooth Satin Chrome
SMC = Smokey Chrome
PC = Polished Chrome
W = White
Z = Black

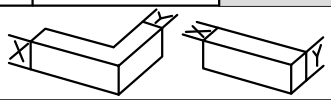

Image Part Code	Accessories Part Code	Pack	Unit	Application	Colour	
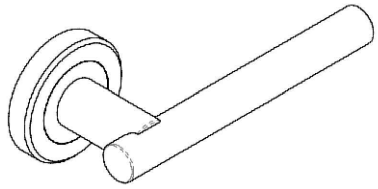	**ACINT504** **Lever On Round Rose Handle** **(Spindle and fixings supplied)**	**1**	**pair**	**ACINT506** **ACINT507**	MF SA KL HP SSC SMC W Z PC	✓ ✓ ✓ ✓
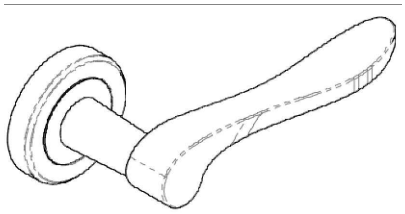	**ACINT505** **Lever On Round Rose Handle** **(Spindle and fixings supplied)**	**1**	**pair**	**ACINT506** **ACINT507**	MF SA KL HP SSC SMC W Z PC	✓ ✓ ✓ ✓
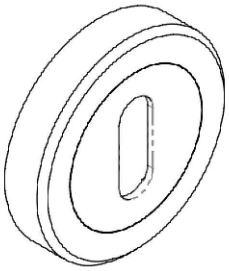	**ACINT506** **Lock Profile Escutcheon on Round Rose** **(Fixings supplied)**	**1**	**each**	**ACINT504** **ACINT505**	MF SA KL HP SSC SMC W Z PC	✓ ✓ ✓ ✓
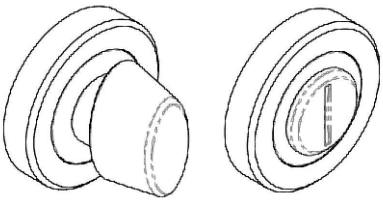	**ACINT507** **Turn & Release on Round Rose** **(Fixings supplied)**	**1**	**set**	**ACINT504** **ACINT505**	MF SA KL HP SSC SMC W Z PC	✓ ✓ ✓ ✓
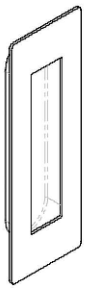	**ACINT521** **180x60mm Rectangular Flush Pull Handle** **Finishes: Bright or Satin Stainless Steel**	**1**	**each**	**INT238**	MF SA KL HP SSC SMC W Z PC	

T-BARS
ACVG65=2.5mm
ACVG66=3.0mm
ACVL150=4.0mm

Screw (Grub)

MF = Mill Finish
SA = Silver Anodised
KL = Basic Colour
HP = Special Colour
SSC = Smooth Satin Chrome
SMC = Smokey Chrome
PC = Polished Chrome
W = White
Z = Black

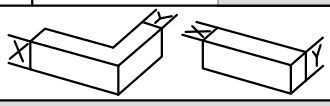

AluSpace Interior Screen

ACCESSORIES : PHOTOS & DRAWINGS

Image	Part Code	Pack	Unit	Application	Colour	
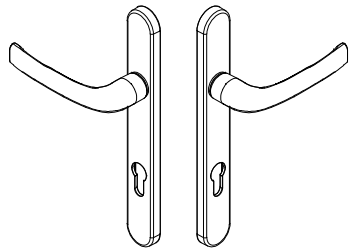	**ACSM060** **Heritage Lever/Lever Handle**	**1**	**pair**	**ACW20065** **ACINT235**	MF	
					SA	
					KL	
					HP	
					SSC	
					SMC	
					W	✓
					Z	✓
					PC	
	**ACINT522** **Square Mitred Pull Handle (450mm centres)** **Finishes:** **Matt Black or Satin Stainless Steel**	**1**	**each**	**INT238**	MF	
					SA	
					KL	
					HP	
					SSC	
					SMC	
					W	
					Z	
					PC	
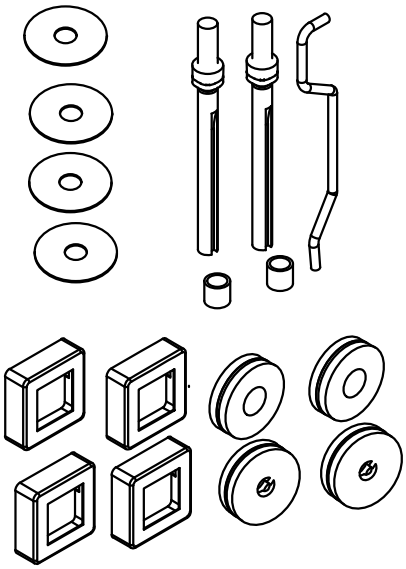	**ACINT523** **Fixings for ACINT522** **Finishes:** **Matt Black or Satin Stainless Steel**	**1**	**each**	**INT238** **ACINT522**	MF	
					SA	
					KL	
					HP	
					SSC	
					SMC	
					W	
					Z	
					PC	
					MF	
					SA	
					KL	
					HP	
					SSC	
					SMC	
					W	
					Z	
					PC	

T-BARS
ACVG65=2.5mm
ACVG66=3.0mm
ACVL150=4.0mm

Screw (Grub)

MF = Mill Finish
SA = Silver Anodised
KL = Basic Colour
HP = Special Colour
SSC = Smooth Satin Chrome
SMC = Smokey Chrome
PC = Polished Chrome
W = White
Z = Black

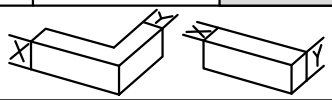

ISSUED: March 2025

Image	Part Code	Pack	Unit	Application	Colour
ACW20065 **Standard Primary Lock 55mm Set Back** 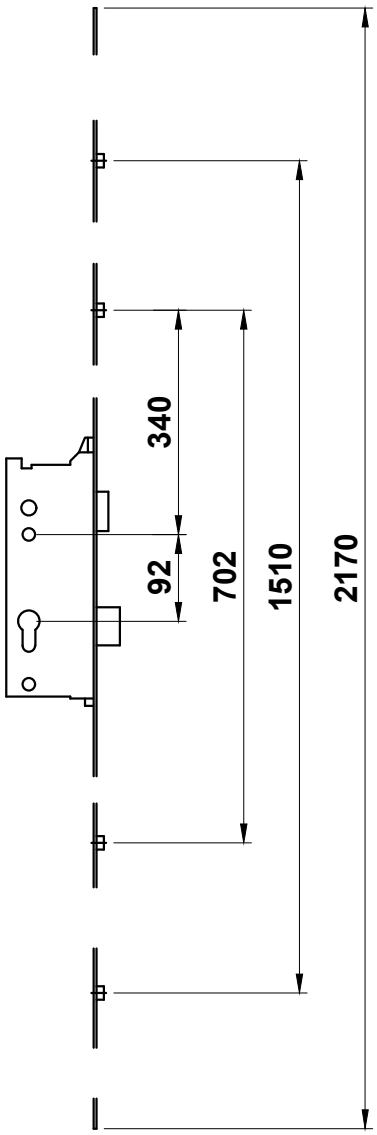	**ACCY3035NKTTS1** **30/35 High Security Cylinder** **3 keys supplied** **Nickle Finish** 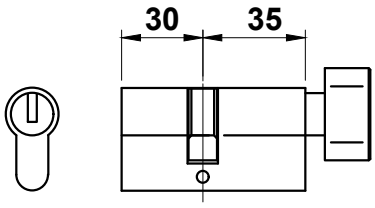	**1**	**each**	**INT230** **INT238** **INT220** **ACSM060**	MF ✓ SA KL HP SSC SMC W Z PC
	ACW20166 L/R 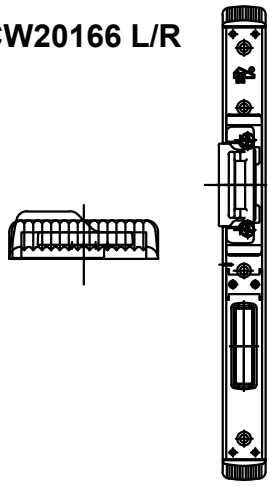	**1**	**each**		
	ACW20067 **Roller Keeps** 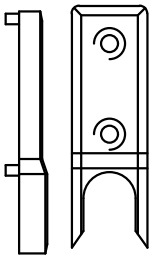	**4**	**each**		

T-BARS
ACVG65=2.5mm
ACVG66=3.0mm
ACVL150=4.0mm

Screw (Grub)

MF	**= Mill Finish**	**W**	**= White**
SA	**= Silver Anodised**	**Z**	**= Black**
KL	**= Basic Colour**		
HP	**= Special Colour**		
SSC	**= Smooth Satin Chrome**		
SMC	**= Smokey Chrome**		
PC	**= Polished Chrome**		

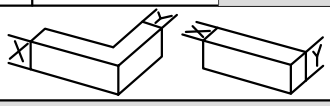

Image	Part Code	Pack	Unit	Application	Colour
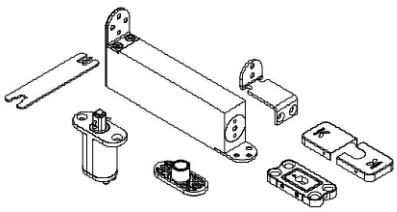	**ACSIN201** **Pivot System (Max 100 Kg)** **(Fixings supplied)**	**1**	**each**	**INT410**	MF SA KL HP SSC SMC W Z ✓ PC
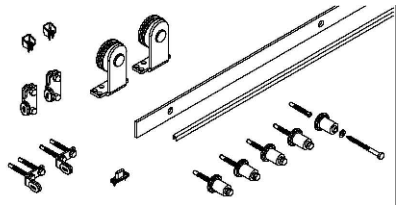	**ACSIN510** **Sliding Door System Kit (Loft)** **Length: 2000mm**	**1**	**each**	**INT320** **INT325**	MF SA KL HP SSC SMC W Z PC
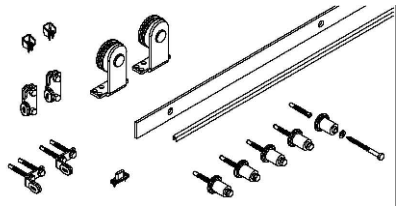	**ACSIN511** **Sliding Door System Kit (Loft)** **Length: 2500mm**	**1**	**each**	**INT320** **INT325**	MF SA KL HP SSC SMC W Z PC
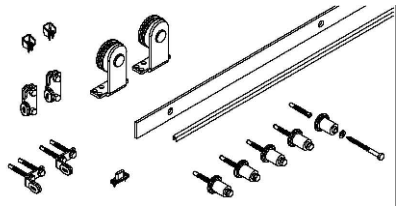	**ACSIN512** **Sliding Door System Kit (Loft)** **Length: 3000mm**	**1**	**each**	**INT320** **INT325**	MF SA KL HP SSC SMC W Z PC
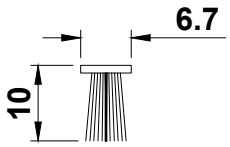	**ACUG842** **6.7mm x 10mm Black Woolpile with Fin**	**50**	**m**	**INT411**	MF SA KL HP SSC SMC W Z PC

T-BARS
ACVG65=2.5mm
ACVG66=3.0mm
ACVL150=4.0mm

Screw (Grub)

MF = Mill Finish
SA = Silver Anodised
KL = Basic Colour
HP = Special Colour
SSC = Smooth Satin Chrome
SMC = Smokey Chrome
PC = Polished Chrome
W = White
Z = Black

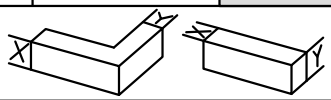

Image	Part Code	Pack	Unit	Application	Colour
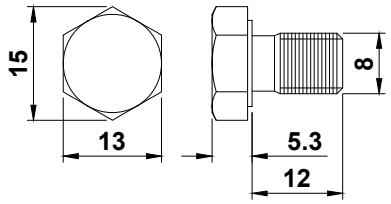	**ACUN3545** **M8 x 12 mm Hexagonal Head Setscrew**	**100**	**pack**	**ACUN3546**	MF SA KL HP SSC SMC W Z PC
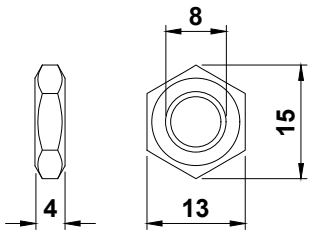	**ACUN3546** **M8 Hexagonal Lock Thin Nut**	**100**	**pack**	**ACUN3545**	MF SA KL HP SSC SMC W Z PC
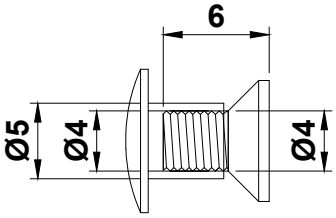	**ACUN3547** **M4 Connecting Screws**	**100**	**pack**	**ACINT230** **ACINT232**	MF SA KL HP SSC SMC W Z PC
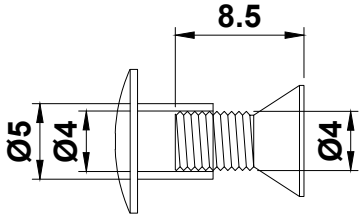	**ACUN3551** **M4 Connecting Screws**	**100**	**pack**	**ACINT430**	MF SA KL HP SSC SMC W Z PC
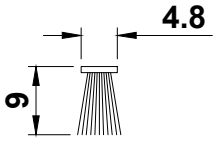	**ACVS033** **4.8mm x 9mm Black Woolpile with Fin**	**150**	**m**	**INT274** **INT275**	MF SA KL HP SSC SMC W Z ✓ PC

T-BARS
ACVG65=2.5mm
ACVG66=3.0mm
ACVL150=4.0mm

Screw (Grub)

MF = Mill Finish
SA = Silver Anodised
KL = Basic Colour
HP = Special Colour
SSC = Smooth Satin Chrome
SMC = Smokey Chrome
PC = Polished Chrome
W = White
Z = Black

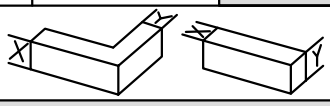

Image	Part Code	Pack	Unit	Application	Colour	
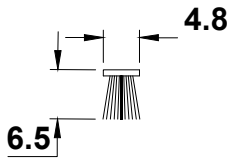	**ACVS034** **4.8mm x 6.5mm Black Woolpile with Fin**	**150**	**m**	**INT320** **INT322** **INT323**	MF SA KL HP EB NP MC W Z	 ✓
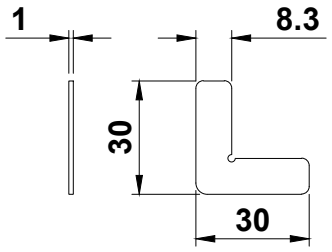	**ACW20024** **Stainless Steel Chevron**	**100**	**pack**	**INT220**	MF SA KL HP SSC SMC W Z PC	✓
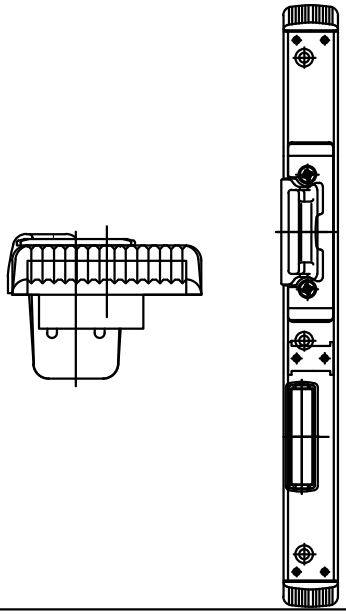	**ACW20166 L/R** **Centre Keep** **Viewed Externally** 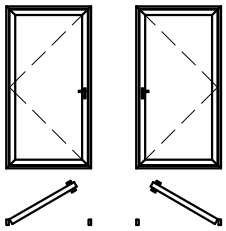 **Right Hand Open In** **Left Hand Open In**	**1**	**each**		MF SA KL HP SSC SMC W Z PC	
					MF SA KL HP EB NP MC W Z	

T-BARS
ACVG65=2.5mm
ACVG66=3.0mm
ACVL150=4.0mm

Screw (Grub)

MF	**= Mill Finish**	**W**	**= White**
SA	**= Silver Anodised**	**Z**	**= Black**
KL	**= Basic Colour**		
HP	**= Special Colour**		
EB	**= Enamel Brass**		
NP	**= Nickel Plated**		
MC	**= Matt Chrome**		

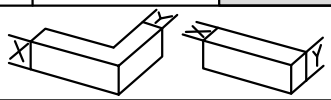

Image	Part Code	Pack	Unit	Application	Colour	
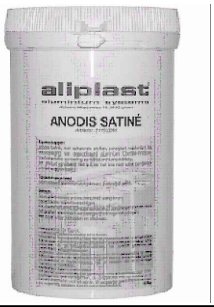	**ACMX09700** **Alu-Polish** **Cleaning emulsion for aluminium oxide.**	**1**	**each**		MF	✓
					SA	
					KL	
					HP	
					SSC	
					SMC	
					W	
					Z	
					PC	
	**ACMX09761** **Maxi Gloss** **Protection for painted and anodised surfaces.**	**1**	**each**		MF	
					SA	
					KL	
					HP	
					SSC	
					SMC	
					W	
					Z	
					PC	
	**ACMX09762** **Alu. Bright** **Cleaner for rough, anodised or enamelled aluminium frames.**	**1**	**each**		MF	
					SA	
					KL	
					HP	
					SSC	
					SMC	
					W	
					Z	
					PC	
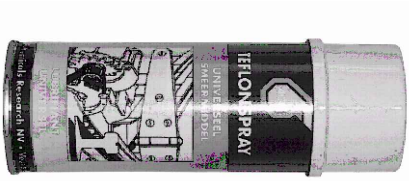	**ACMX09763** **Teflon Spray** **Lubricant**	**1**	**each**		MF	
					SA	
					KL	
					HP	
					SSC	
					SMC	
					W	
					Z	
					PC	
	**ACMX09764** **Maxi Cleaner** **For cleaning oily surfaces.**	**1**	**each**		MF	
					SA	
					KL	
					HP	
					SSC	
					SMC	
					W	
					Z	
					PC	

T-BARS
ACVG65=2.5mm
ACVG66=3.0mm
ACVL150=4.0mm

Screw (Grub)

MF = Mill Finish
SA = Silver Anodised
KL = Basic Colour
HP = Special Colour
SSC = Smooth Satin Chrome
SMC = Smokey Chrome
PC = Polished Chrome
W = White
Z = Black

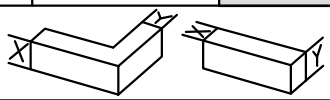

AluSpace Interior Screen

STANDARD ACCESSORIES

Image	Part Code	Pack	Unit	Application	Colour	
	ACMX09765 Glue Cleaner De-grease and silicone remover (1 Litre).	1	each		MF	
					SA	
					KL	
					HP	
					SSC	
					SMC	
					W	
					Z	
					PC	
	ACMX09770 Roll & Wrap 100mm	1	each		MF	
					SA	
					KL	
					HP	
					SSC	
					SMC	
					W	
					Z	
					PC	
	ACMX09775 Grip Handwrap	1	each		MF	
					SA	
					KL	
					HP	
					SSC	
					SMC	
					W	
					Z	
					PC	
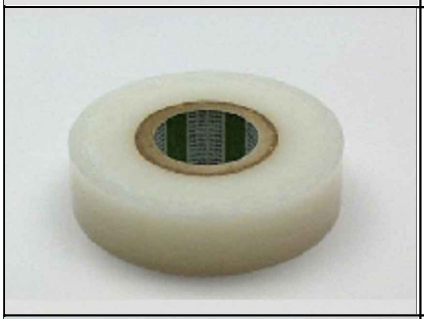	ACMX09801 Protective Tape 50mm	1	each		MF	
					SA	
					KL	
					HP	
					SSC	
					SMC	
					W	
					Z	
					PC	
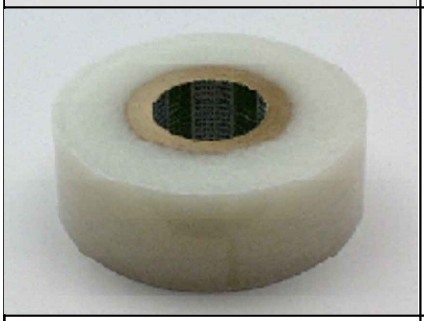	ACMX09802 Protective Tape 70mm	1	each		MF	
					SA	
					KL	
					HP	
					SSC	
					SMC	
					W	
					Z	
					PC	

T-BARS
ACVG65=2.5mm
ACVG66=3.0mm
ACVL150=4.0mm

Screen (Grub)

MF	= Mill Finish	W	= White
SA	= Silver Anodised	Z	= Black
KL	= Basic Colour		
HP	= Special Colour		
SSC	= Smooth Satin Chrome		
SMC	= Smokey Chrome		
PC	= Polished Chrome		

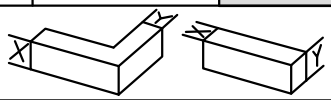

ISSUED: March 2025

AluSpace Interior Screen

STANDARD ACCESSORIES

Image	Part Code	Pack	Unit	Application	Colour	
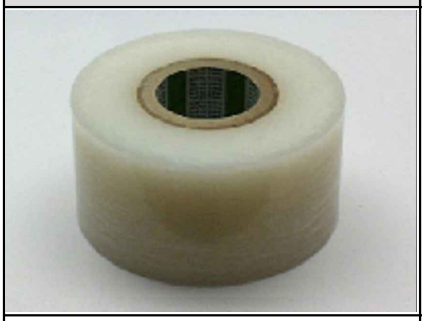	**ACMX09803** **Protective Tape 100mm**	**1**	**each**		MF	
					SA	
					KL	
					HP	
					SSC	
					SMC	
					W	
					Z	
					PC	
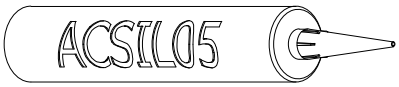	**ACSIL05** **Rubber Sealant**	**1**	**each**		MF	
					SA	
					KL	
					HP	
					SSC	
					SMC	
					W	
					Z	
					PC	
	**ACSIL04** **Sealing Glue** **Order with suffix of KL colour (eg.ACSIL04KL005) or BL=Black/WP=White/ CL=Clear**	**1**	**each**		MF	
					SA	
					KL	✓
					HP	
					SSC	
					SMC	
					W	✓
					Z	✓
					PC	
	**ACSIL08** **Silicon Gun**	**1**	**each**		MF	
					SA	
					KL	
					HP	
					SSC	
					SMC	
					W	
					Z	
					PC	
	**ACSIL013** **Glue for Mitre**	**1**	**each**		MF	
					SA	
					KL	
					HP	
					SSC	
					SMC	
					W	
					Z	
					PC	

T-BARS
ACVG65=2.5mm
ACVG66=3.0mm
ACVL150=4.0mm

Screen (Grub)

MF = Mill Finish
SA = Silver Anodised
KL = Basic Colour
HP = Special Colour
SSC = Smooth Satin Chrome
SMC = Smokey Chrome
PC = Polished Chrome
W = White
Z = Black

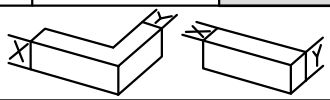

smart
architectural aluminium

AluSpace Interior Screen

STANDARD ACCESSORIES

Image	Part Code	Pack	Unit	Application	Colour
	**ACSIL014** **Anti-Corrosion Coating**	1	each		MF ✓ SA KL HP SSC SMC W Z PC
	**ACUN3900** **Gasket Roller**	1	Each	Wedge Gaskets	MF SA KL HP SSC SMC W Z PC
					MF SA KL HP SSC SMC W Z PC
					MF SA KL HP SSC SMC W Z PC
					MF SA KL HP SSC SMC W Z PC

T-BARS
ACVG65=2.5mm
ACVG66=3.0mm
ACVL150=4.0mm

Screw (Grub)

MF = **Mill Finish**
SA = **Silver Anodised**
KL = **Basic Colour**
HP = **Special Colour**
SSC = **Smooth Satin Chrome**
SMC = **Smokey Chrome**
PC = **Polished Chrome**
W = **White**
Z = **Black**

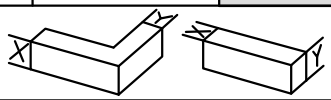

Section C

Sections

Scale Elevations

Fixed Light & Open In - Swing Door

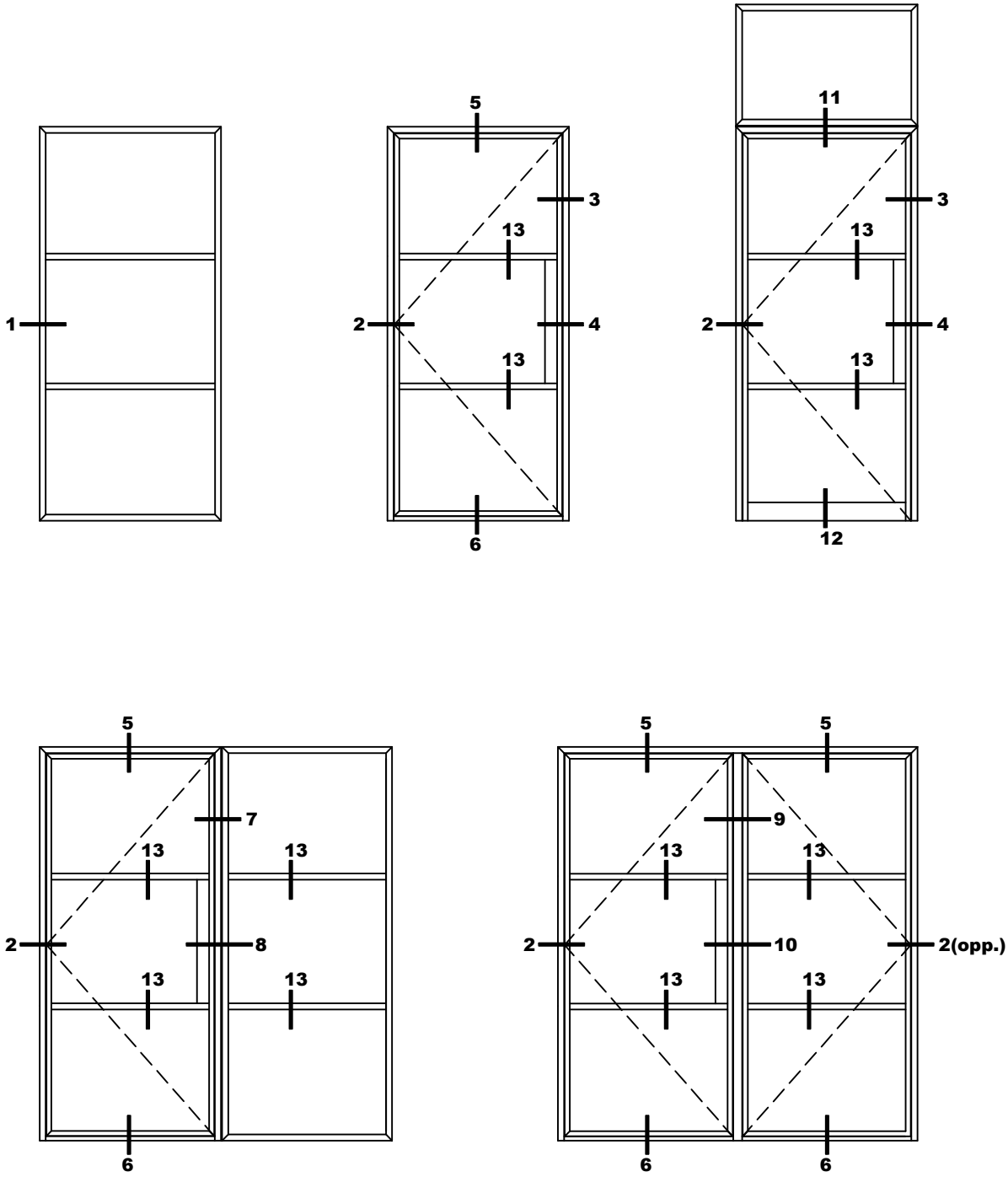

Do Not Scale From This Drawing

Detail 1A

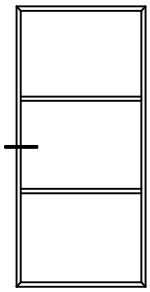

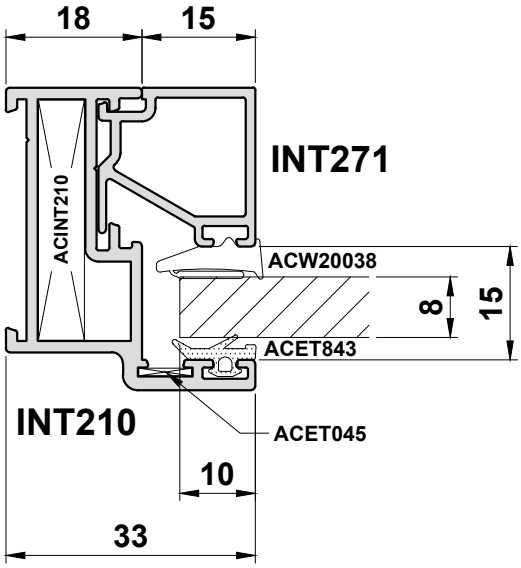

Do Not Scale From This Drawing

ISSUED : March 2025

Detail 1B

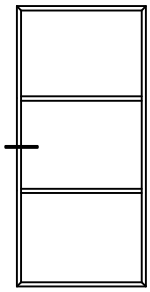

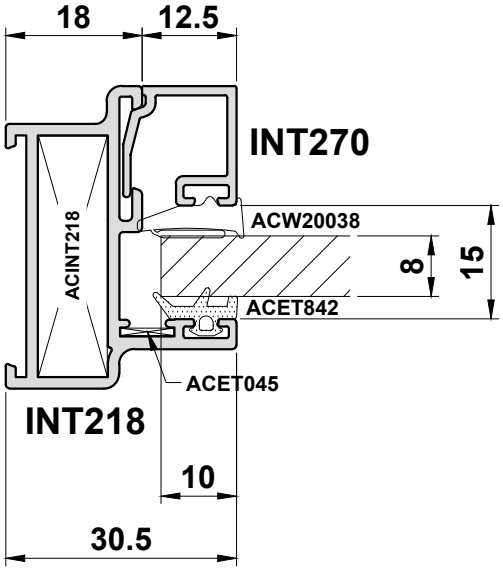

Do Not Scale From This Drawing

Detail 1C

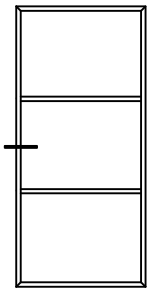

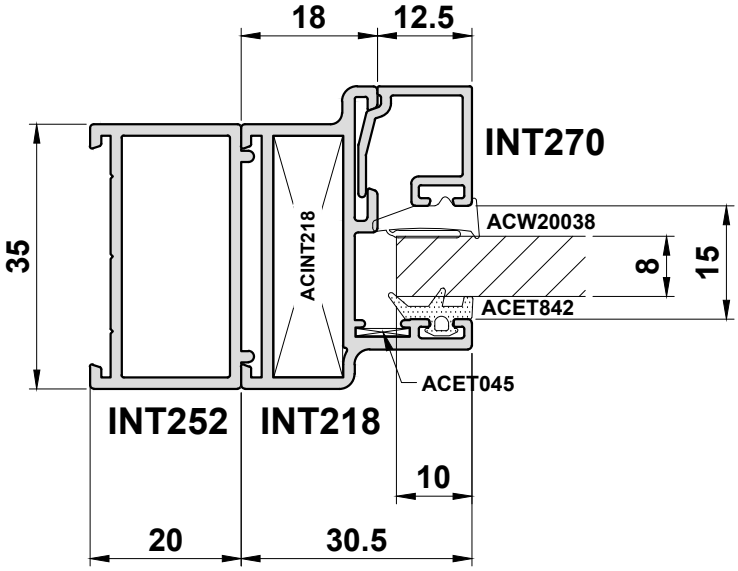

Do Not Scale From This Drawing

Detail 2

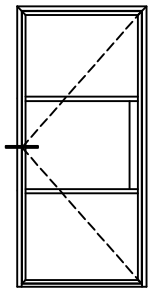

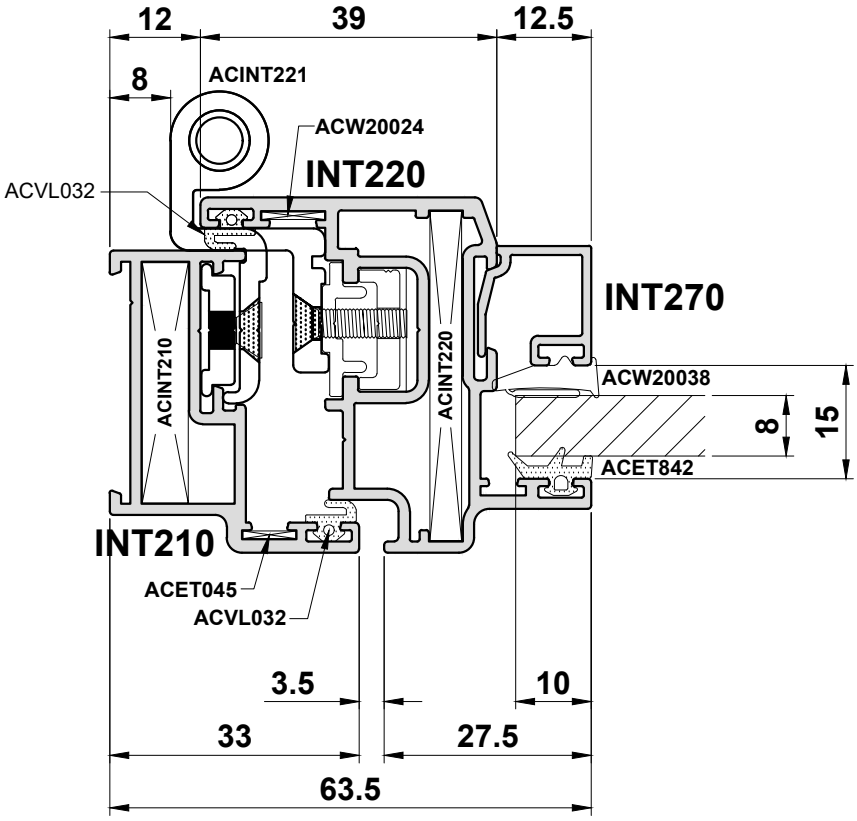

Do Not Scale From This Drawing

Detail 3

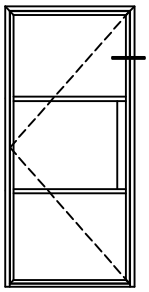

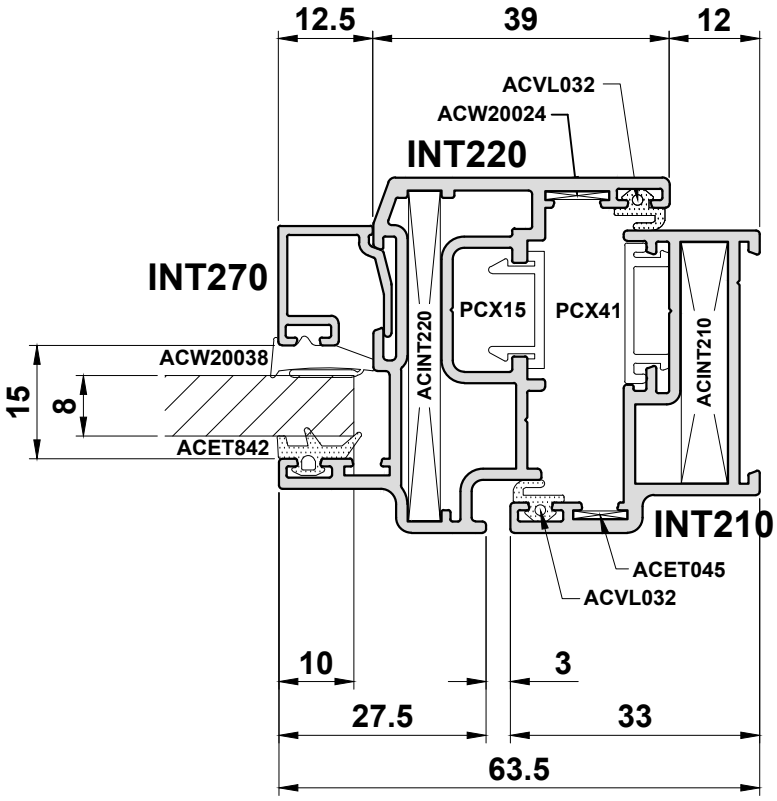

Do Not Scale From This Drawing

ISSUED : March 2025

Detail 4

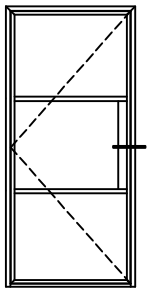

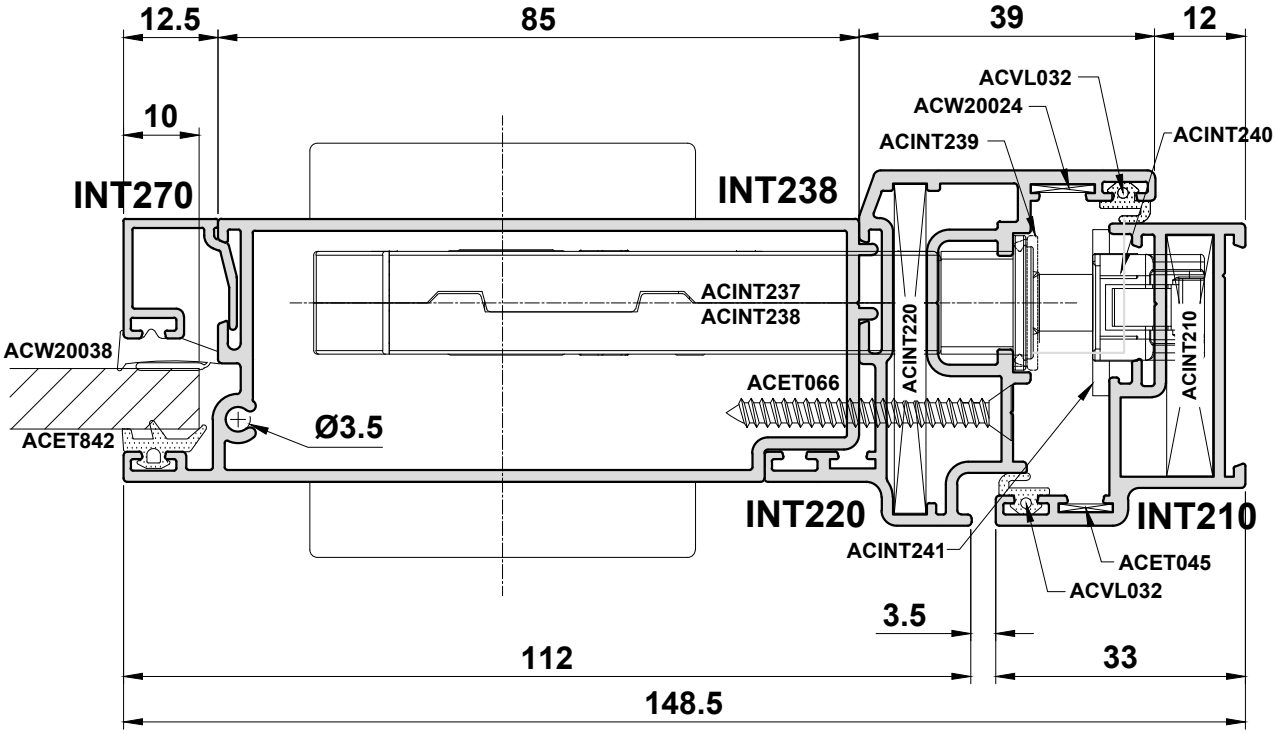

Do Not Scale From This Drawing

Detail 5

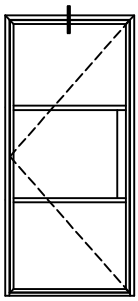

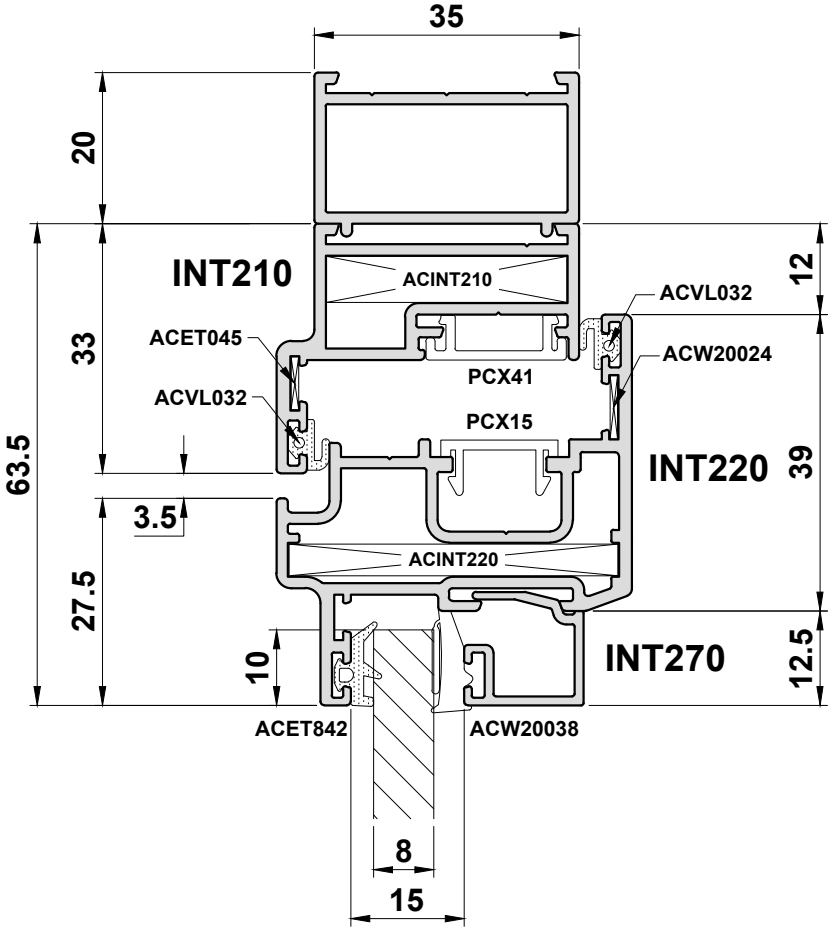

Do Not Scale From This Drawing

ISSUED : March 2025

Detail 6

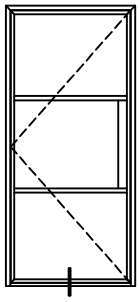

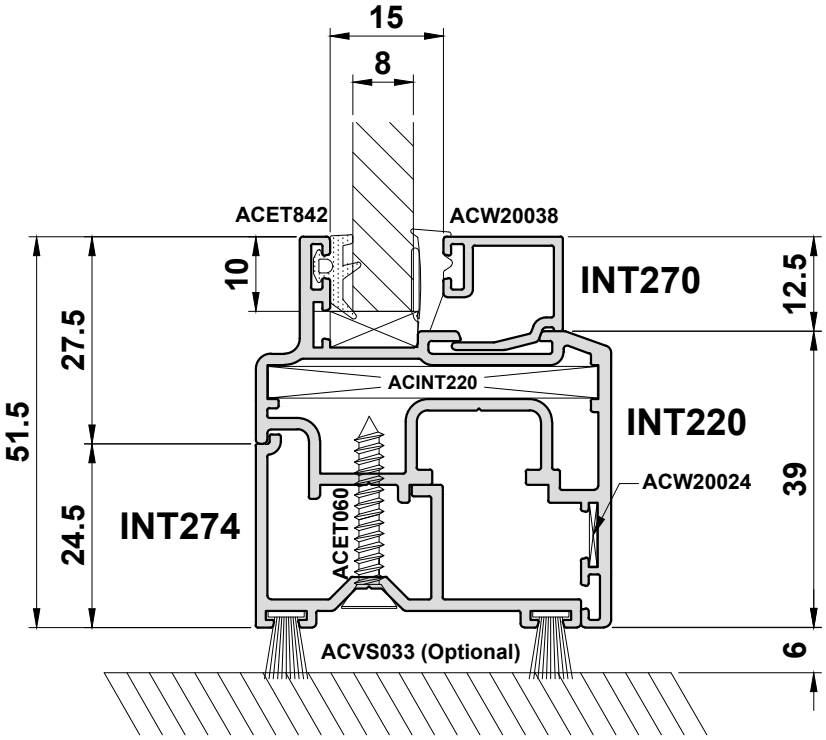

Do Not Scale From This Drawing

Detail 7A

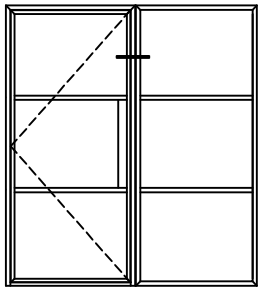

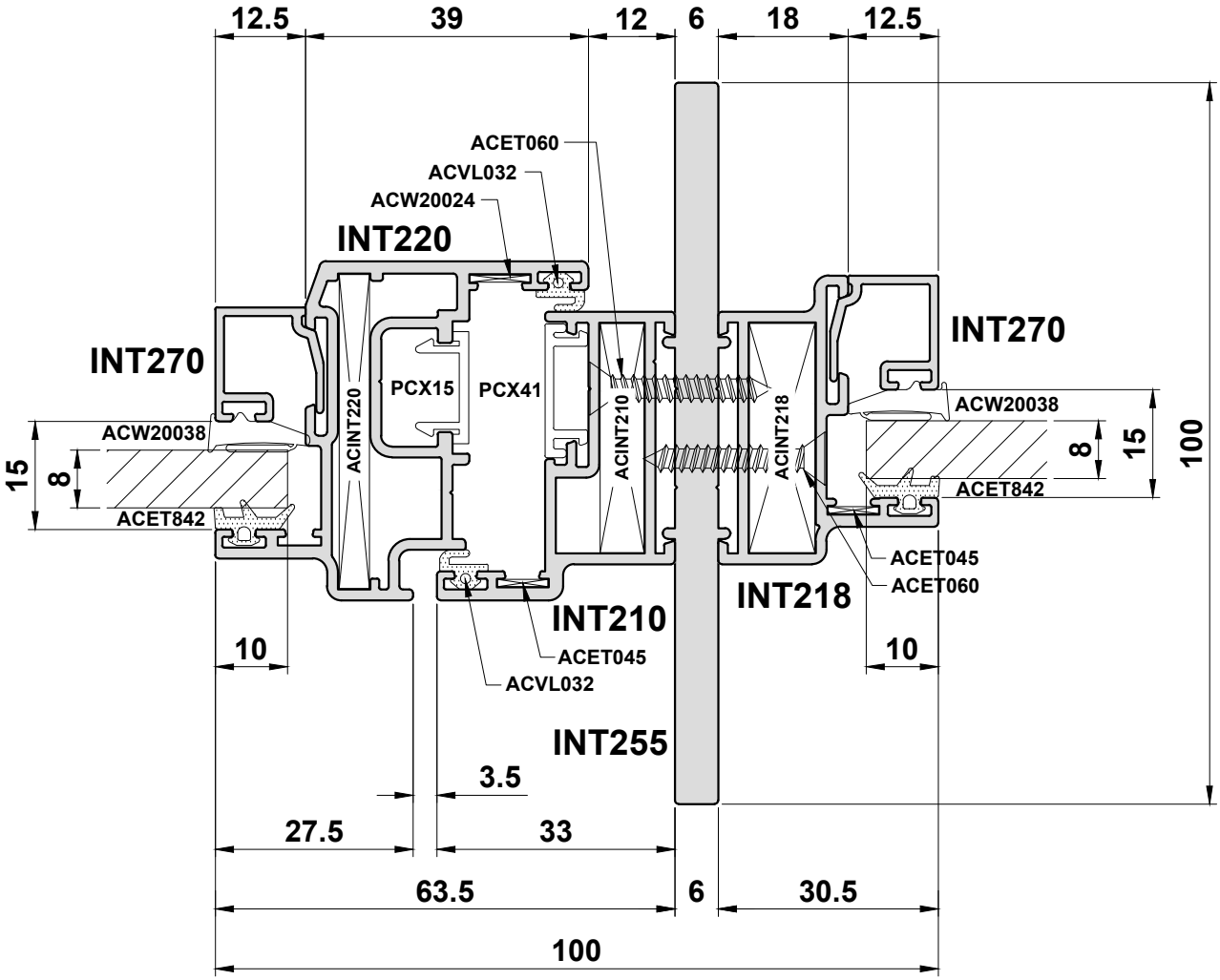

Do Not Scale From This Drawing

ISSUED : March 2025

Detail 7B

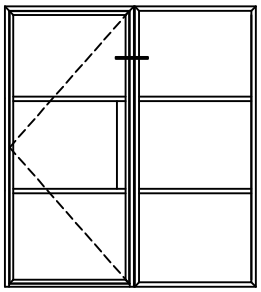

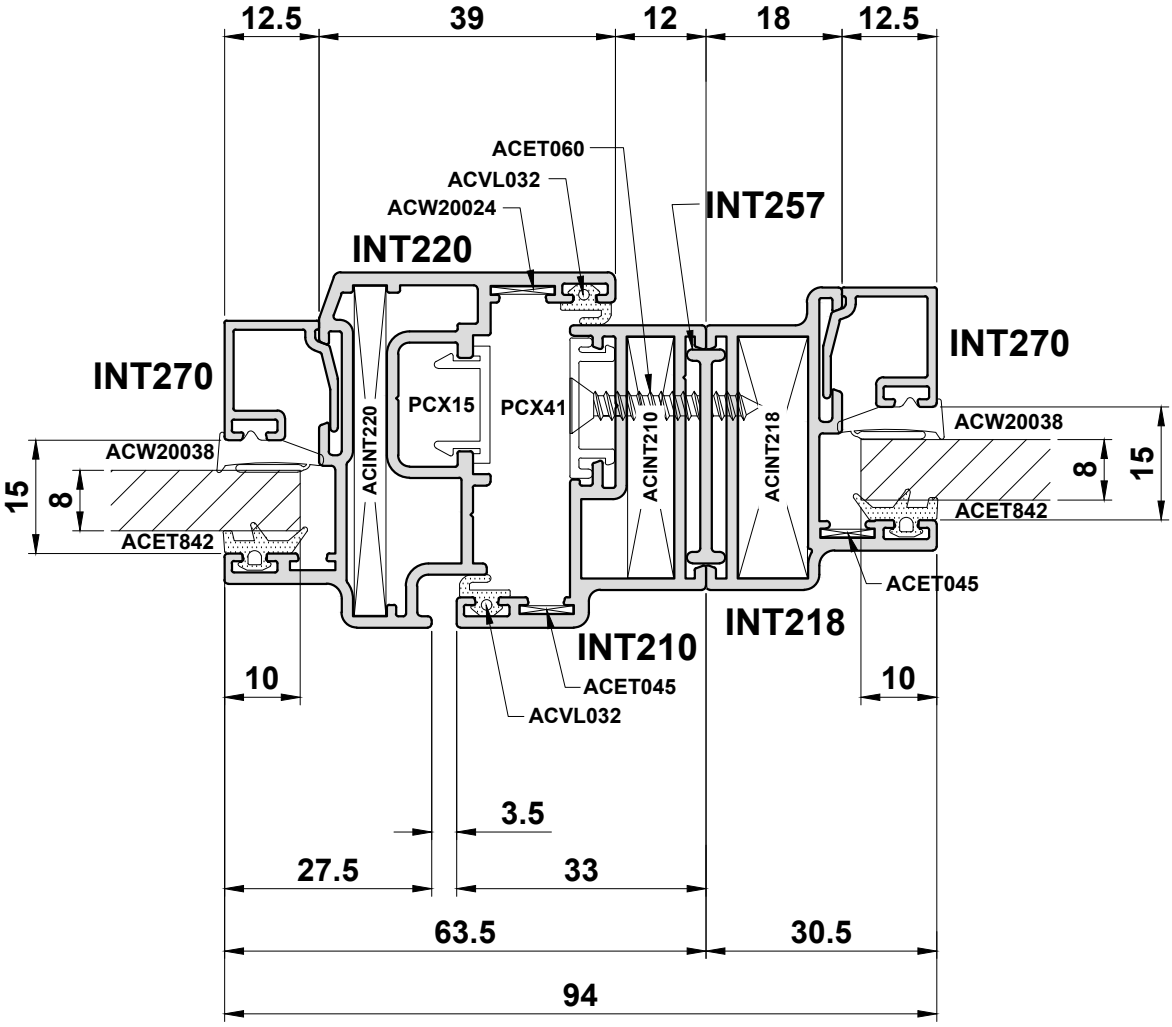

Do Not Scale From This Drawing

Detail 8

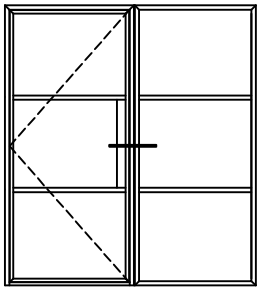

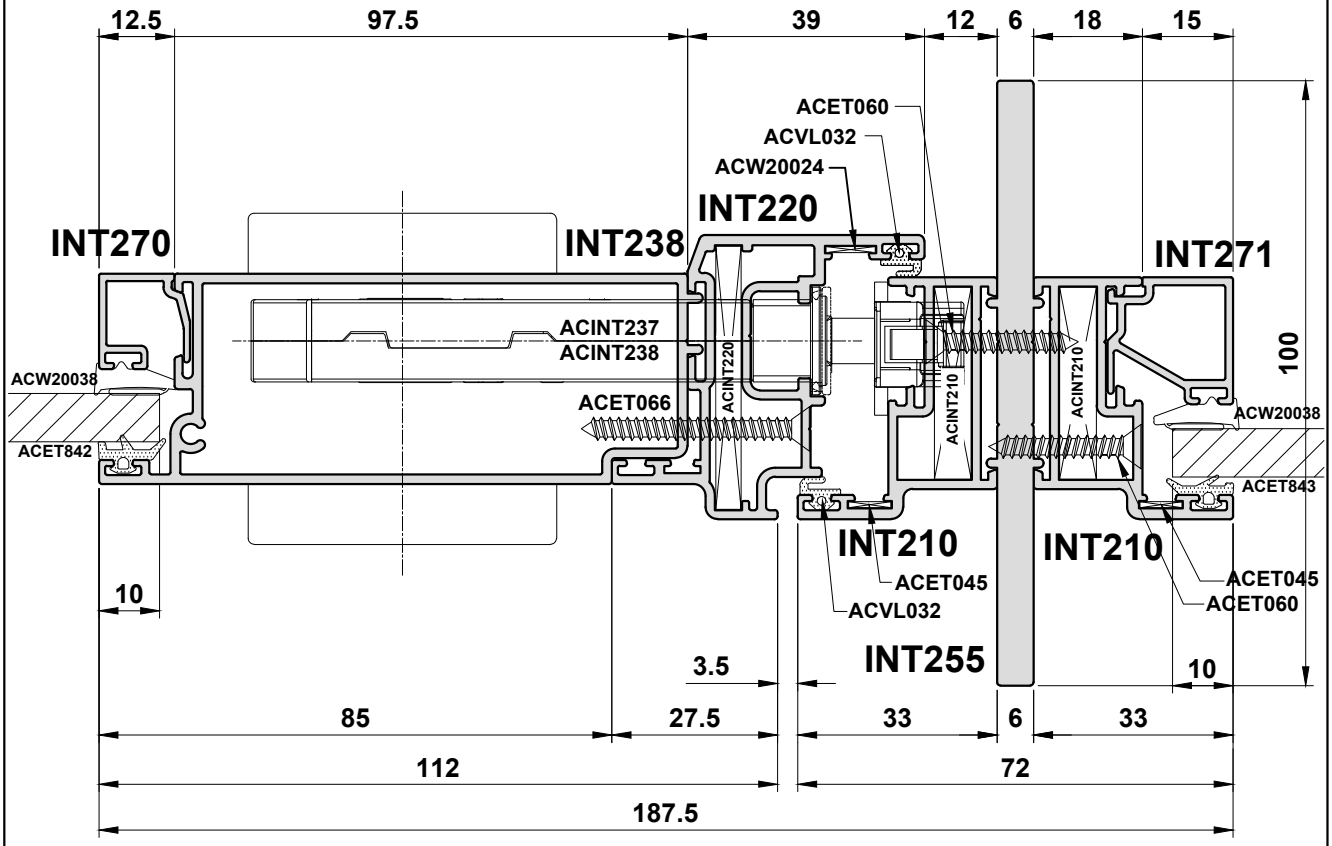

Scale 1:0.8

Do Not Scale From This Drawing

Detail 9

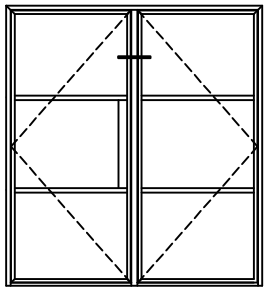

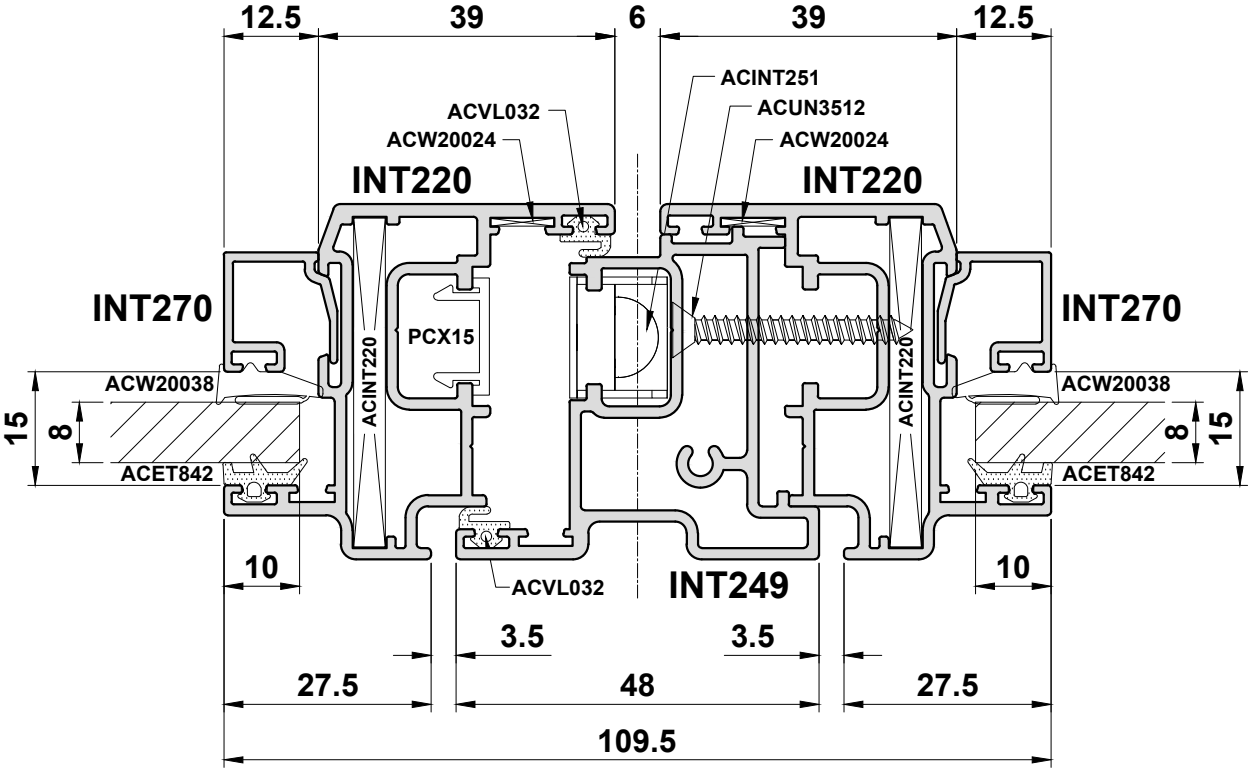

Do Not Scale From This Drawing

Detail 10

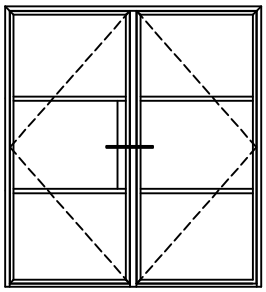

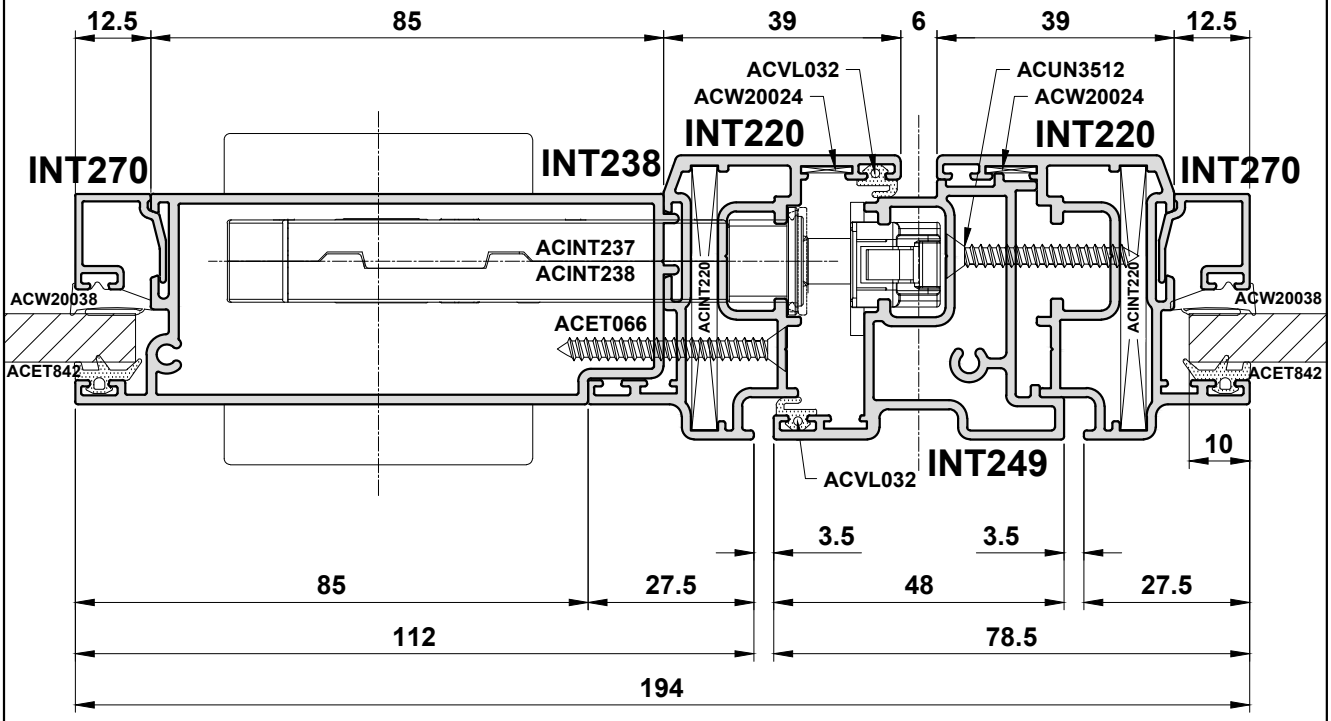

Scale 1:0.8

Do Not Scale From This Drawing

ISSUED : March 2025

Detail 11

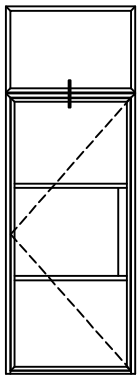

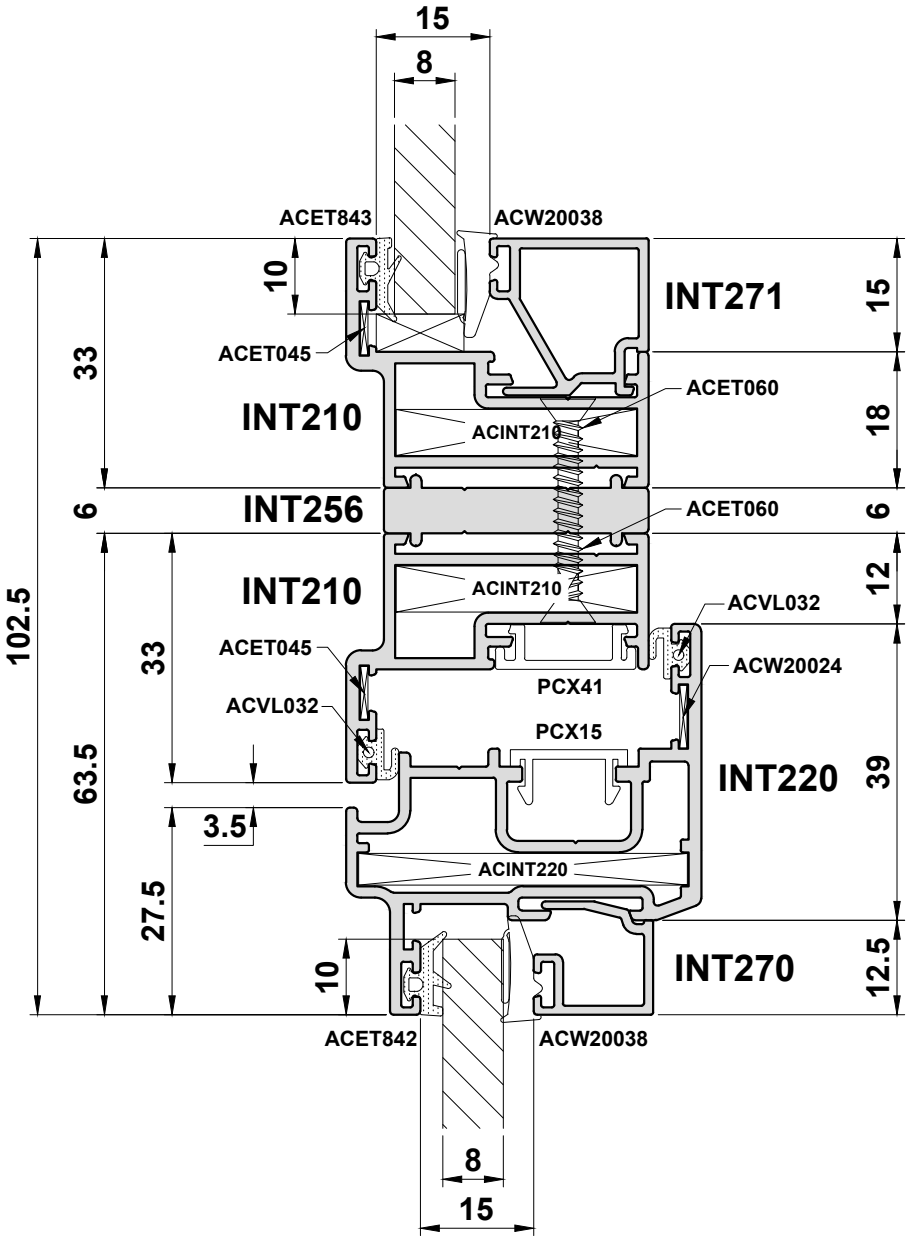

Do Not Scale From This Drawing

Detail 12

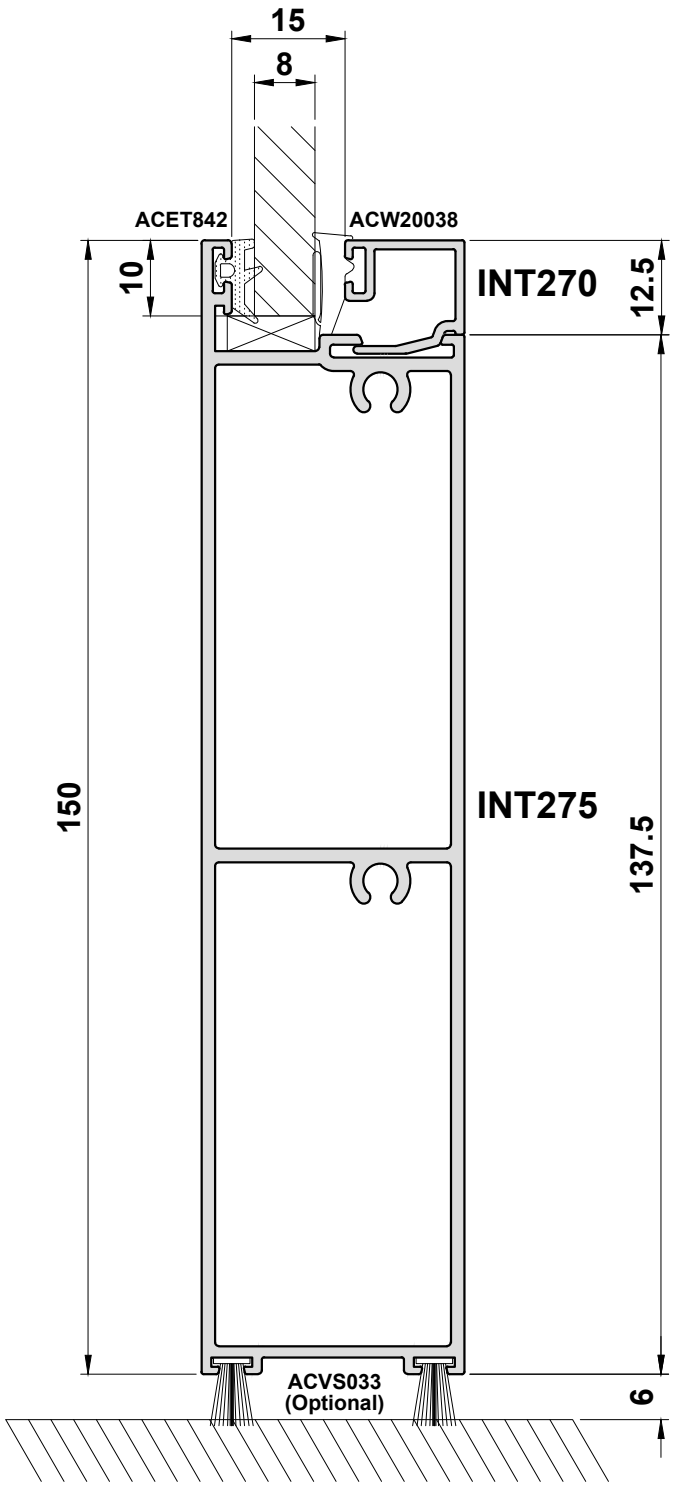

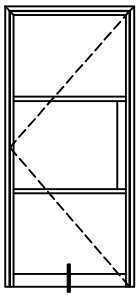

Do Not Scale From This Drawing

ISSUED : March 2025

Detail 13A

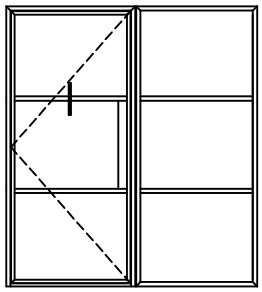

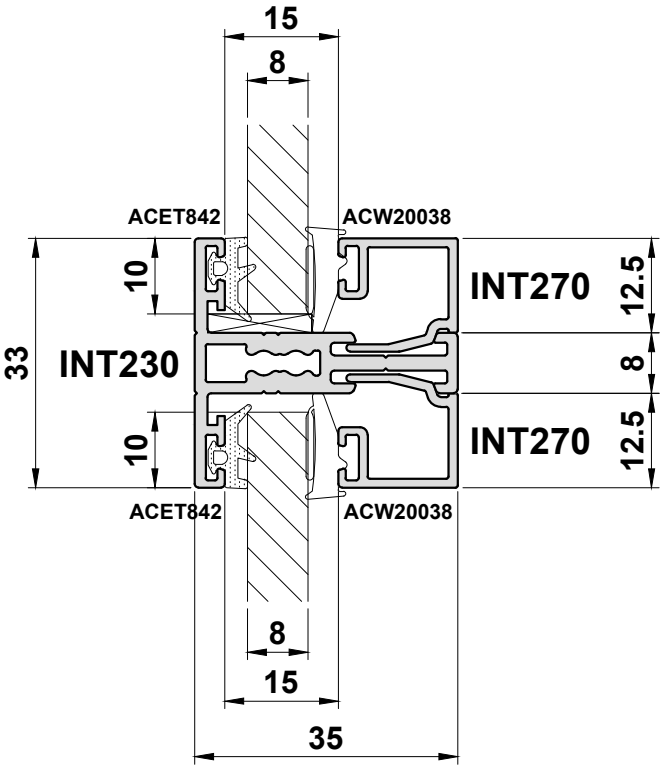

Do Not Scale From This Drawing

Detail 13B

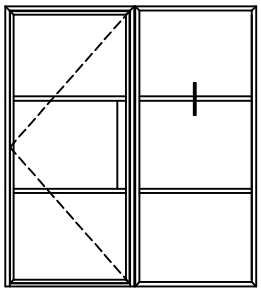

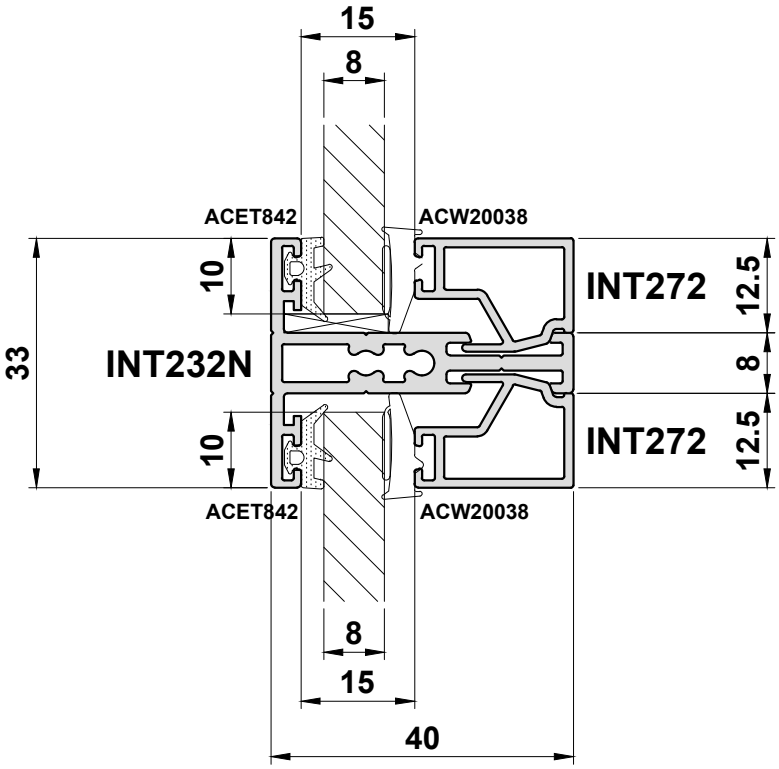

Do Not Scale From This Drawing

Sliding Door

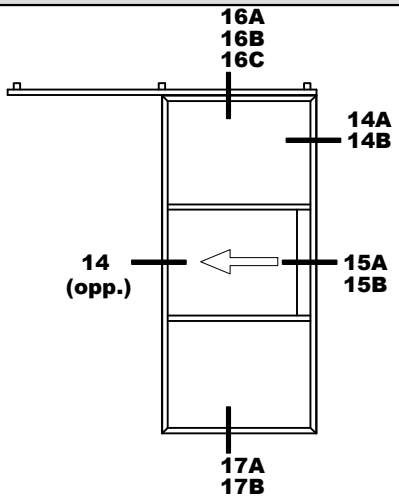

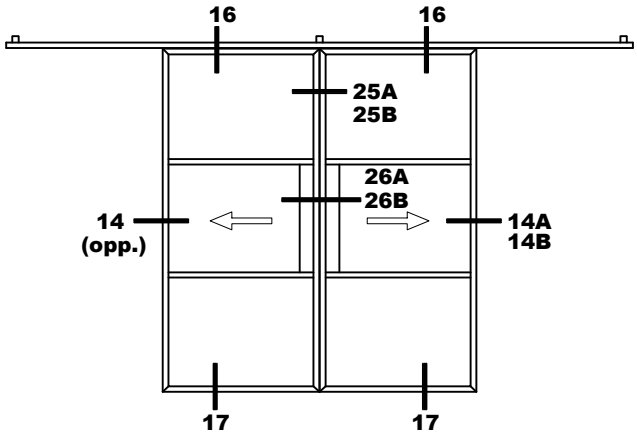

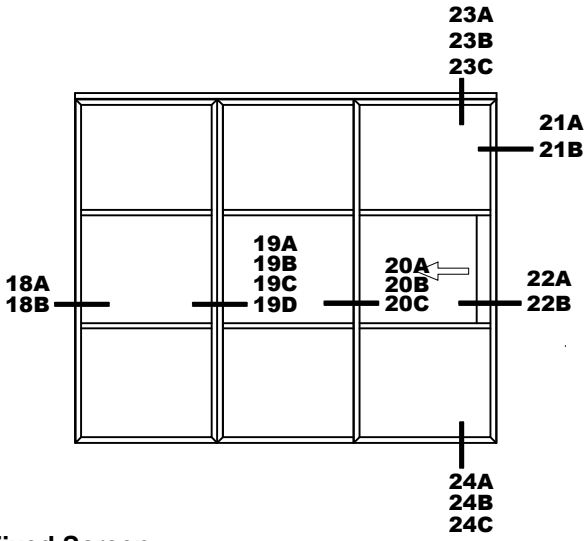

Option A: INT320 Fixed Screen
Option B: INT218 Fixed Screen

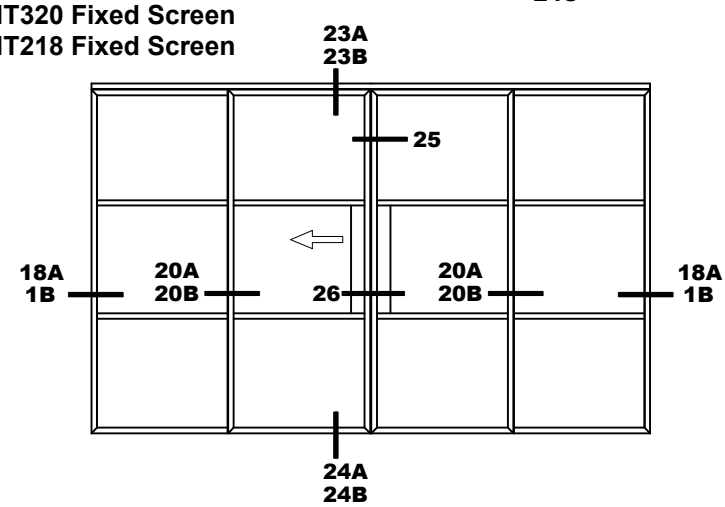

Do Not Scale From This Drawing

Detail 14A

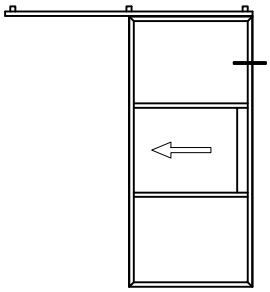

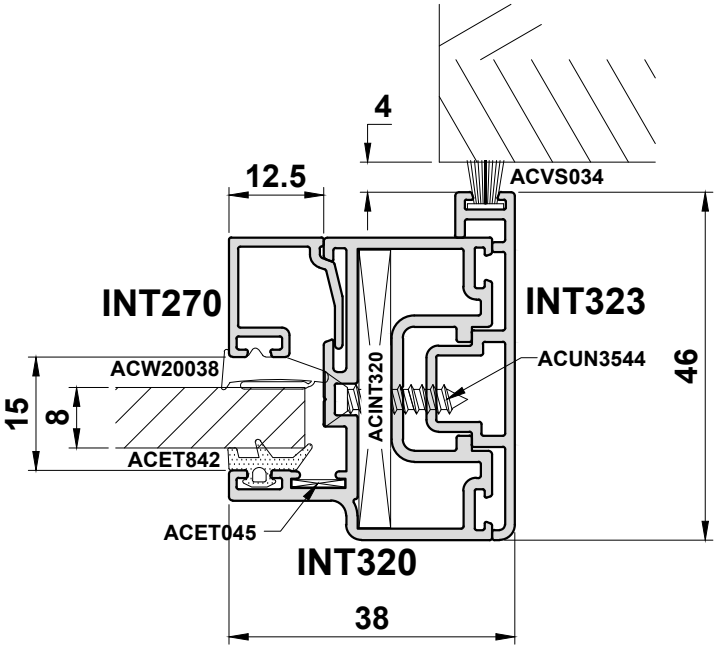

Do Not Scale From This Drawing

ISSUED : March 2025

Detail 14B

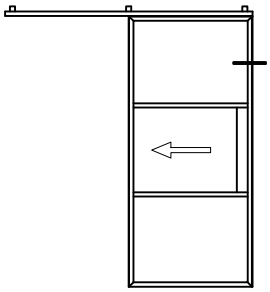

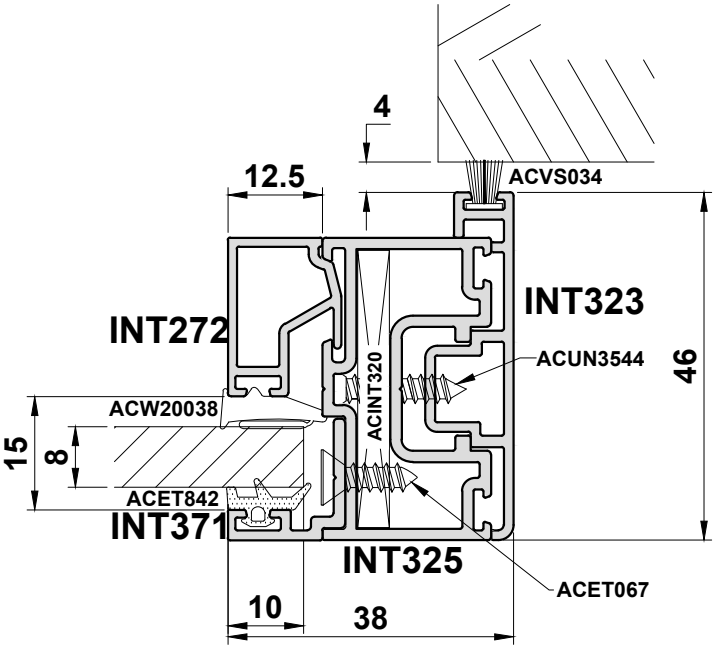

Do Not Scale From This Drawing

Detail 15A

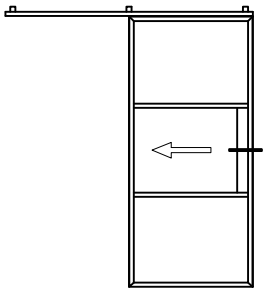

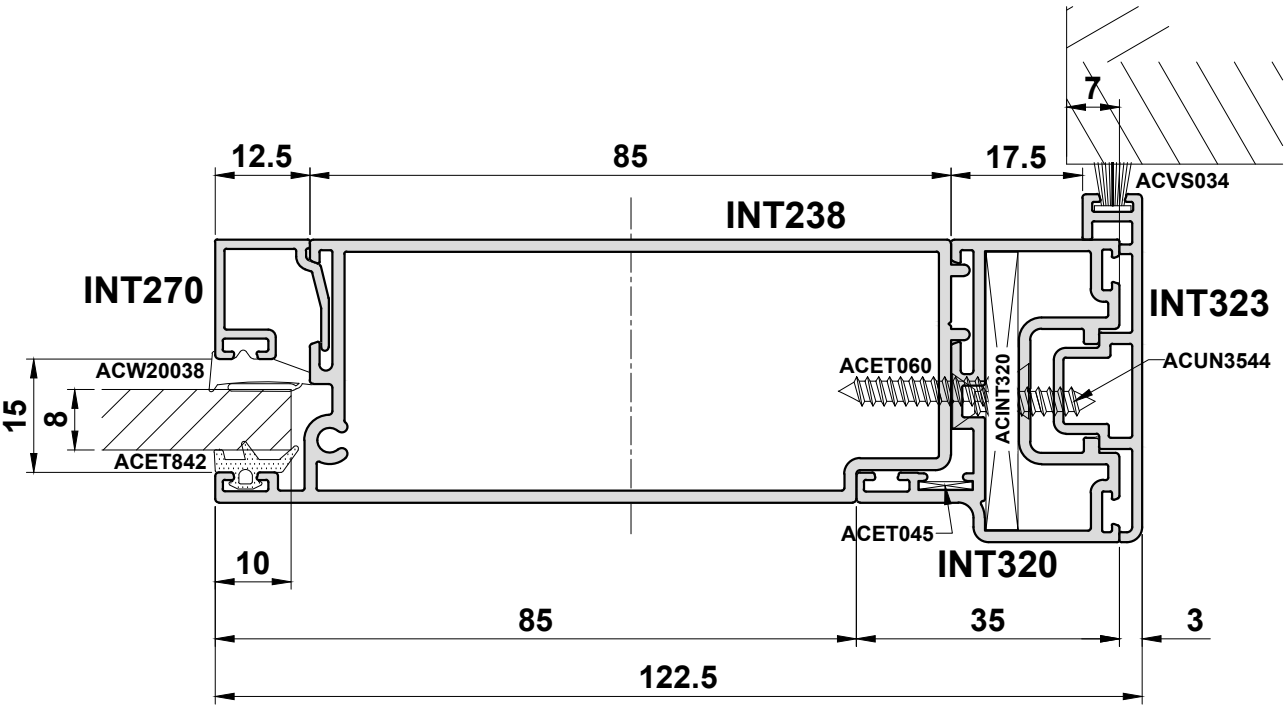

Do Not Scale From This Drawing

Detail 15B

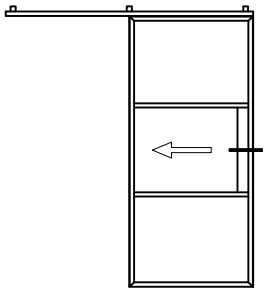

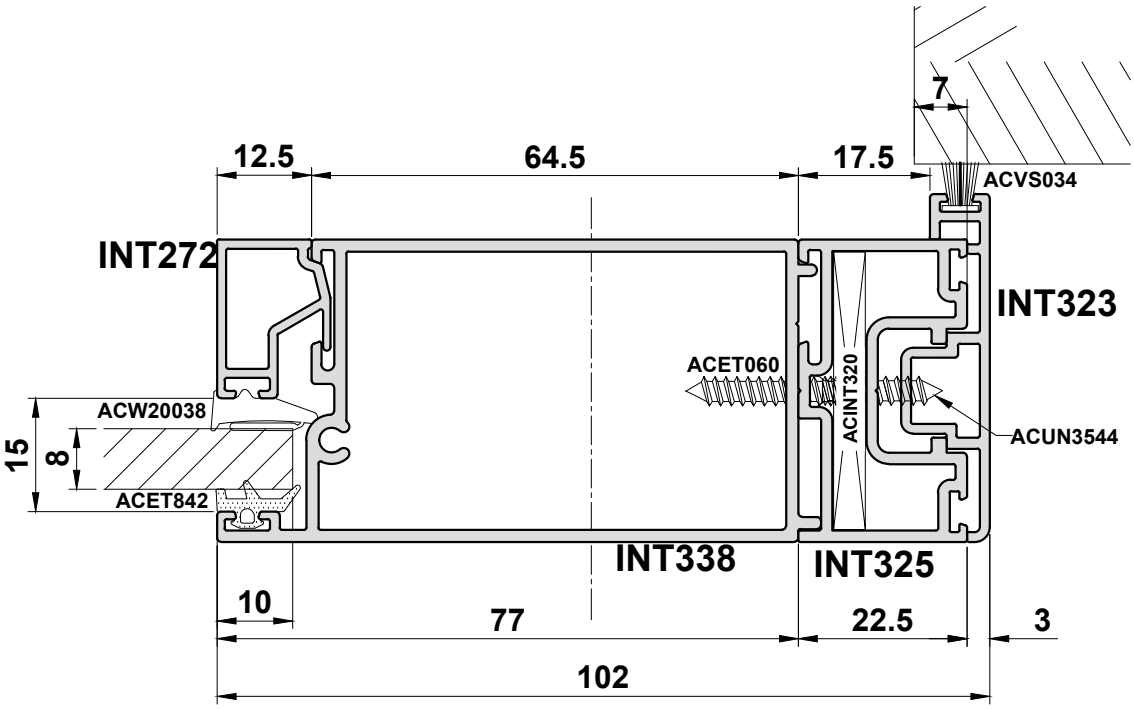

Do Not Scale From This Drawing

Detail 16A

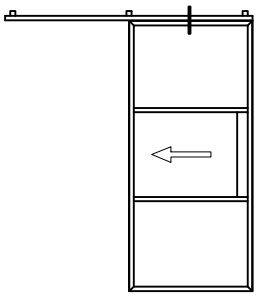

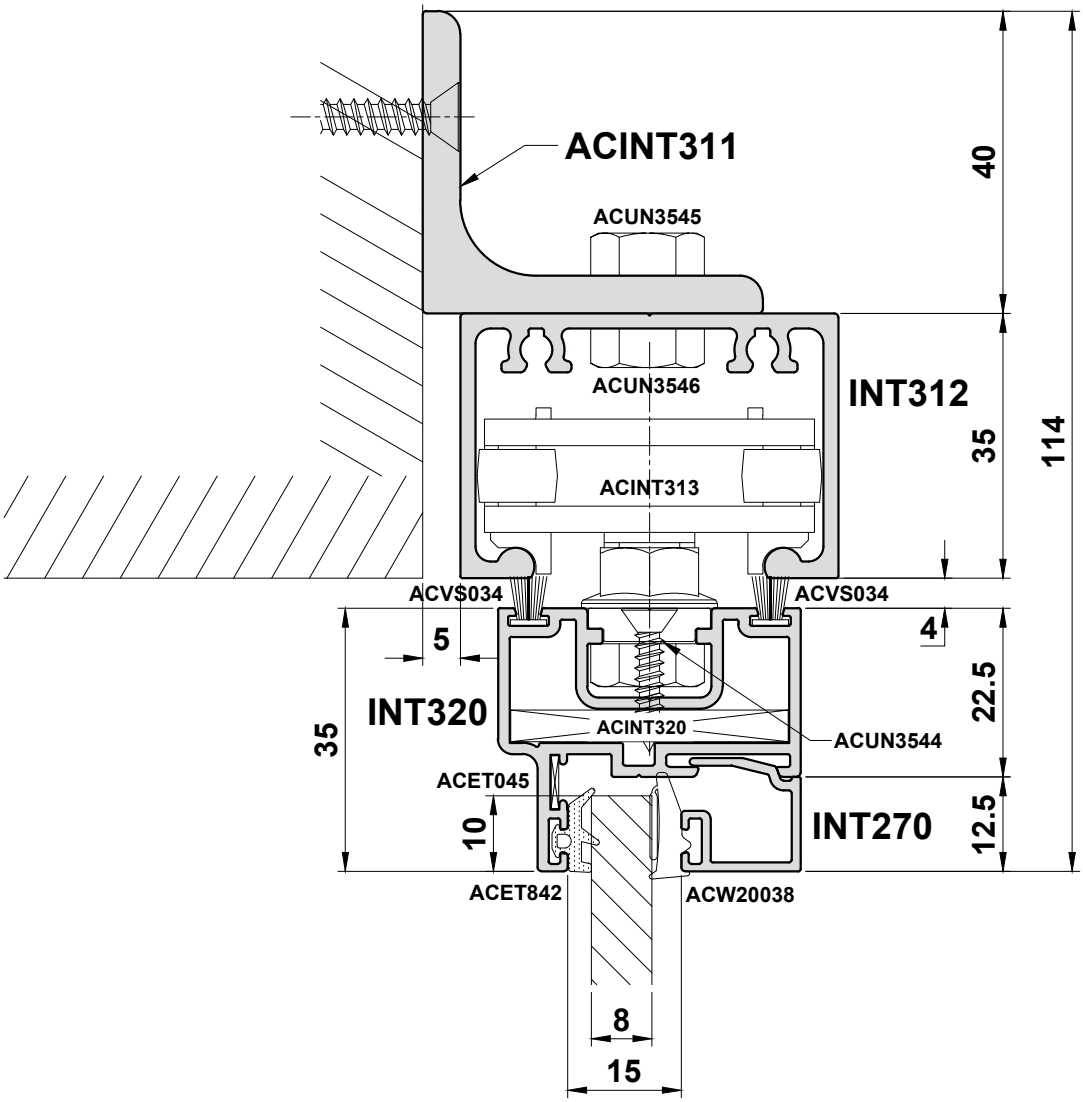

Do Not Scale From This Drawing

Detail 16B

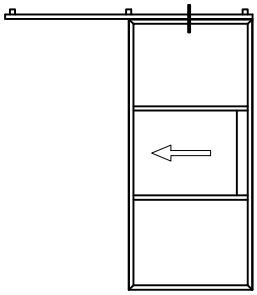

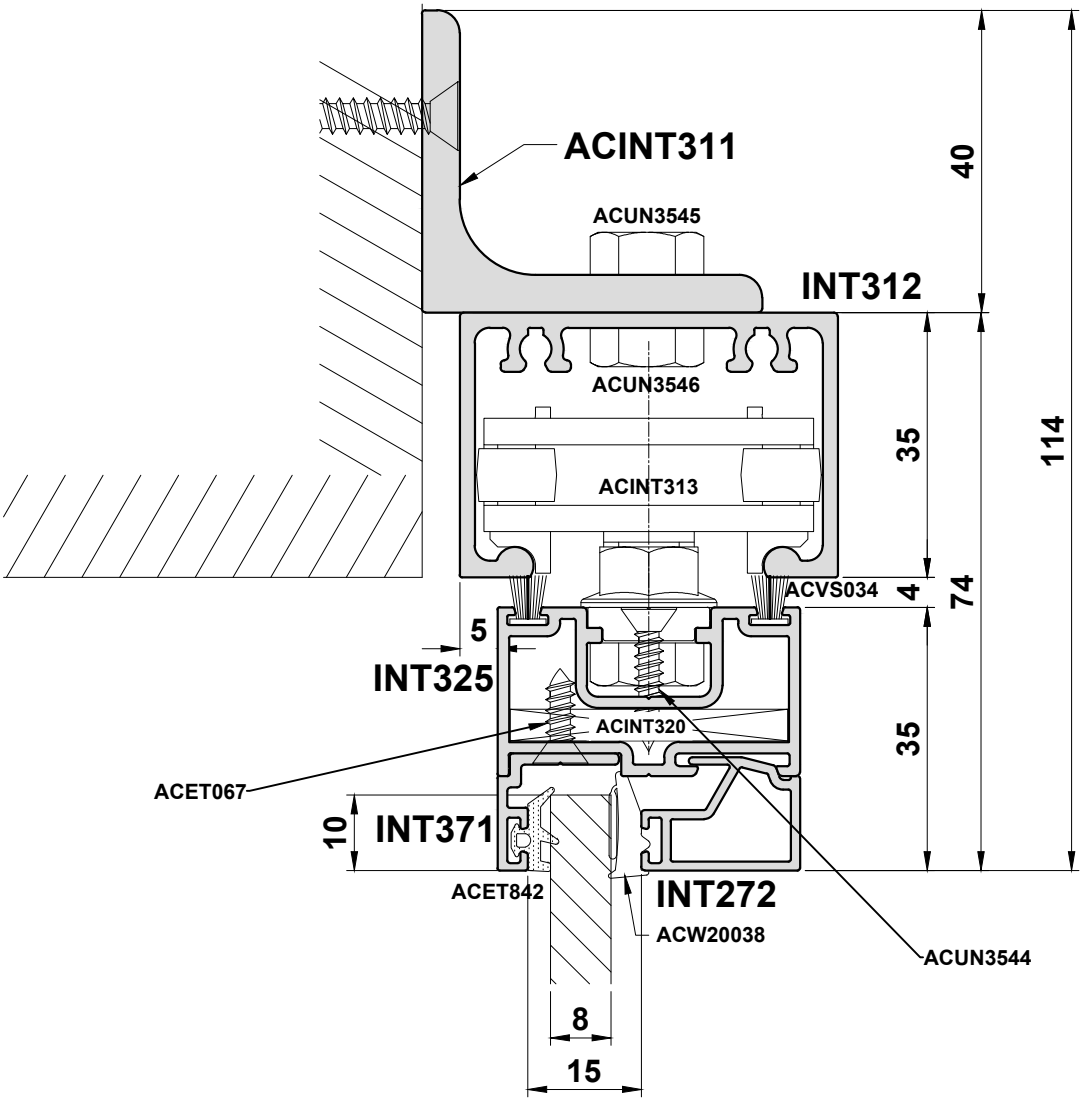

Do Not Scale From This Drawing

Detail 16C

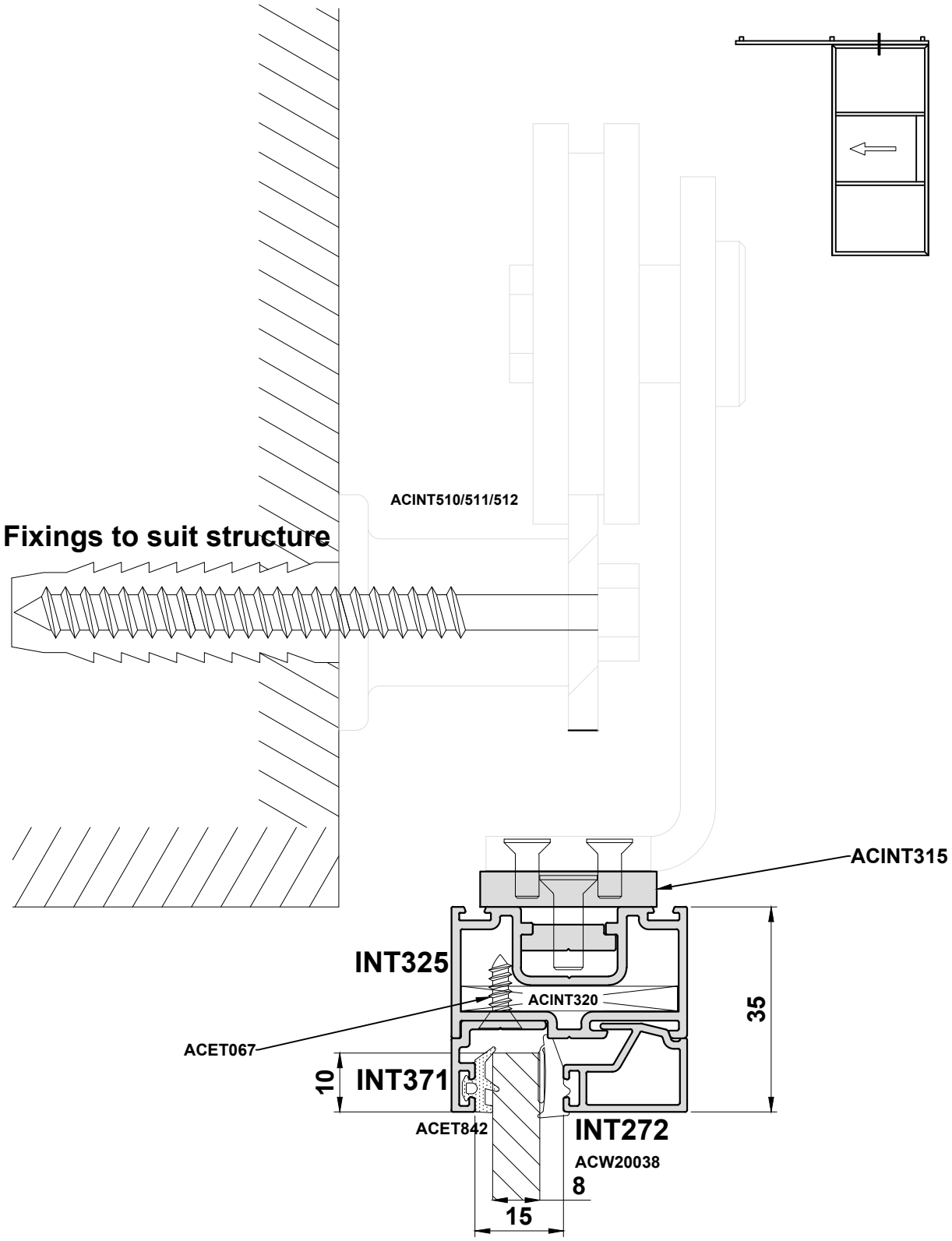

Do Not Scale From This Drawing

Detail 17A

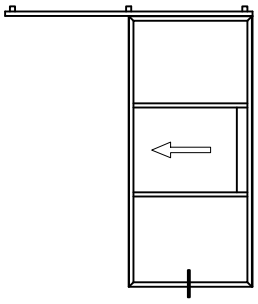

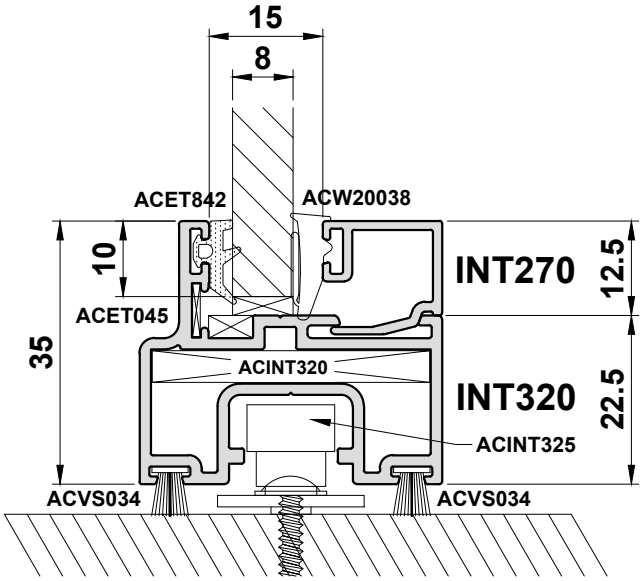

Do Not Scale From This Drawing

Detail 17B

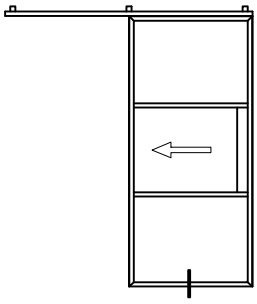

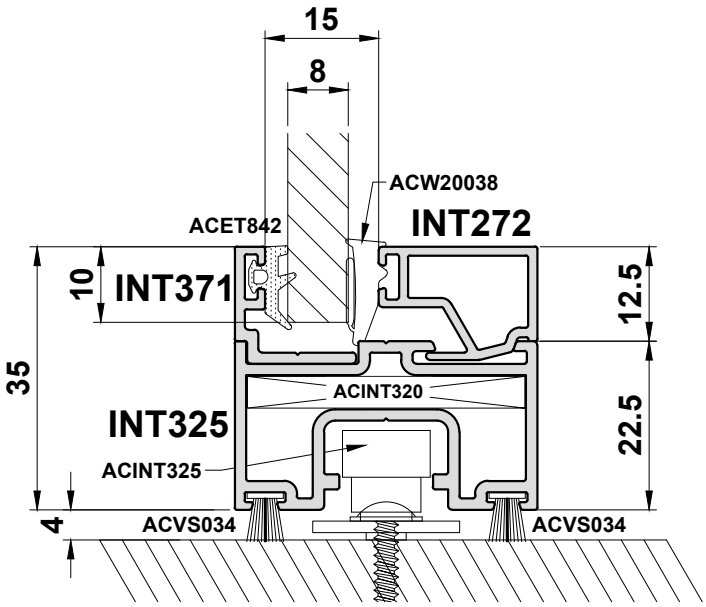

Do Not Scale From This Drawing

Detail 18A

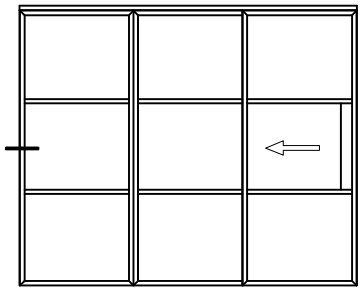

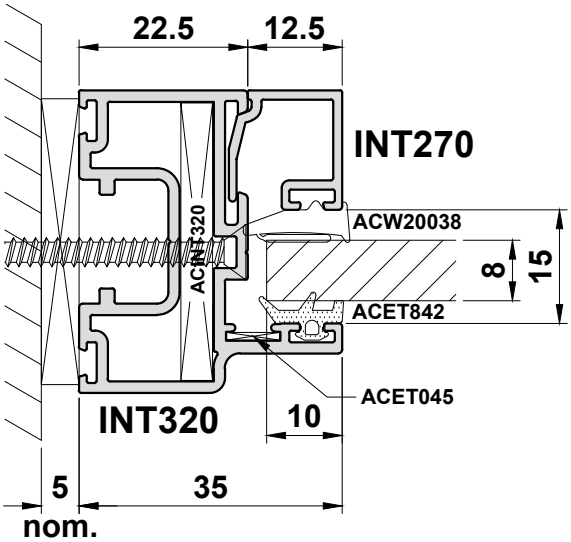

Do Not Scale From This Drawing

Detail 18B

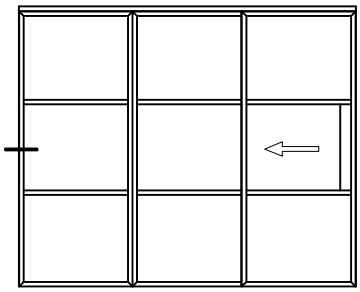

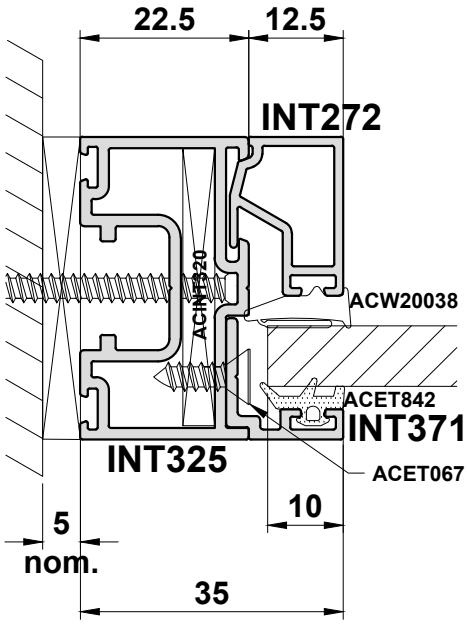

Do Not Scale From This Drawing

Detail 19A

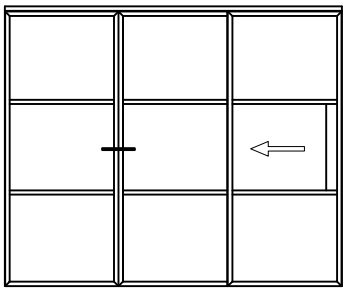

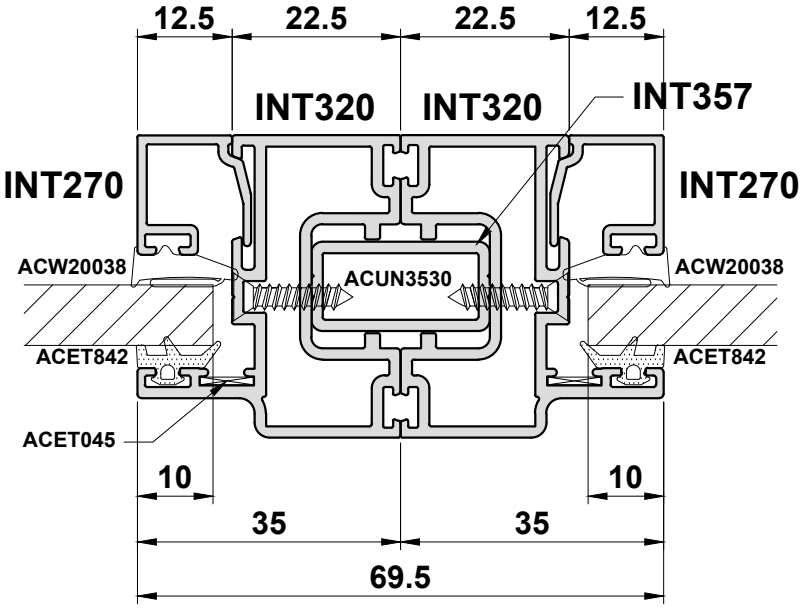

Do Not Scale From This Drawing

Detail 19B

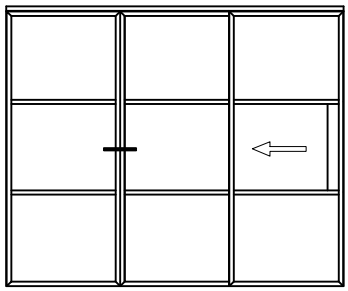

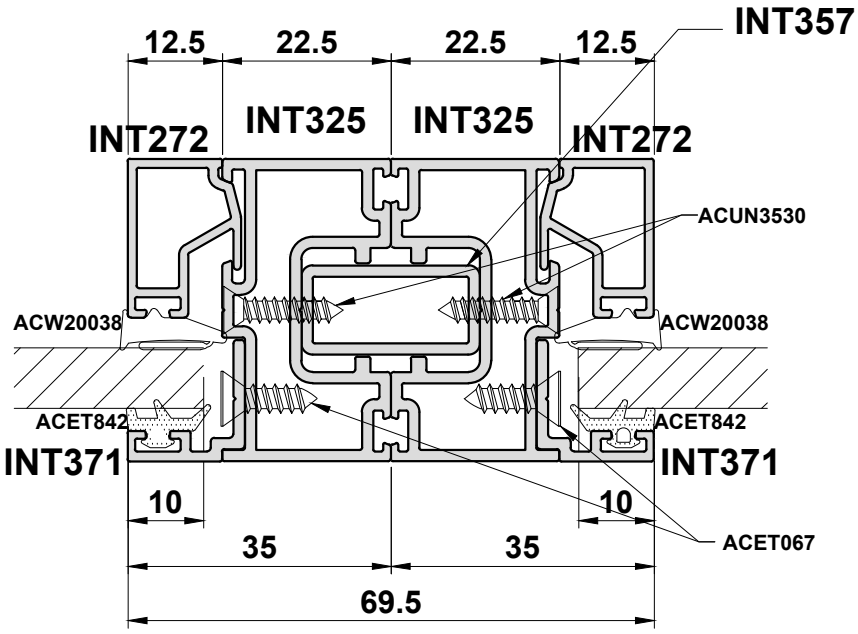

Do Not Scale From This Drawing

Detail 19C

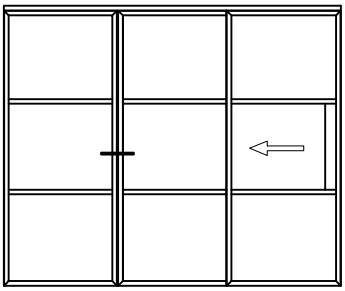

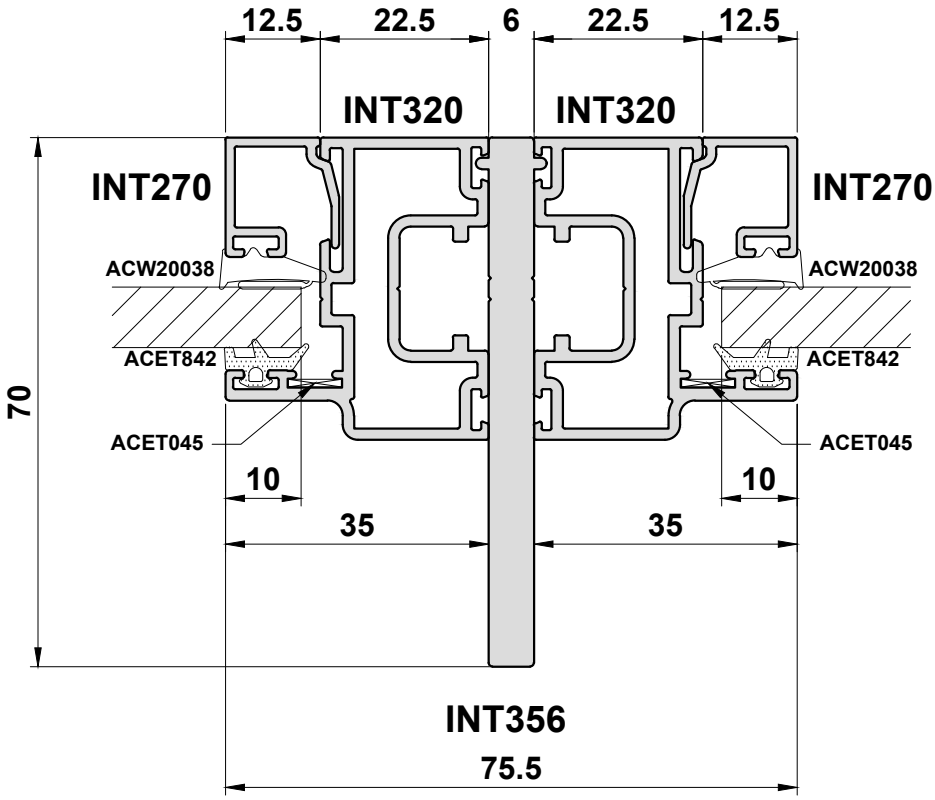

Do Not Scale From This Drawing

Detail 19D

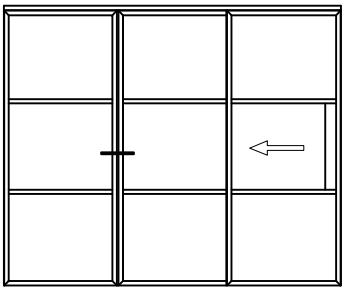

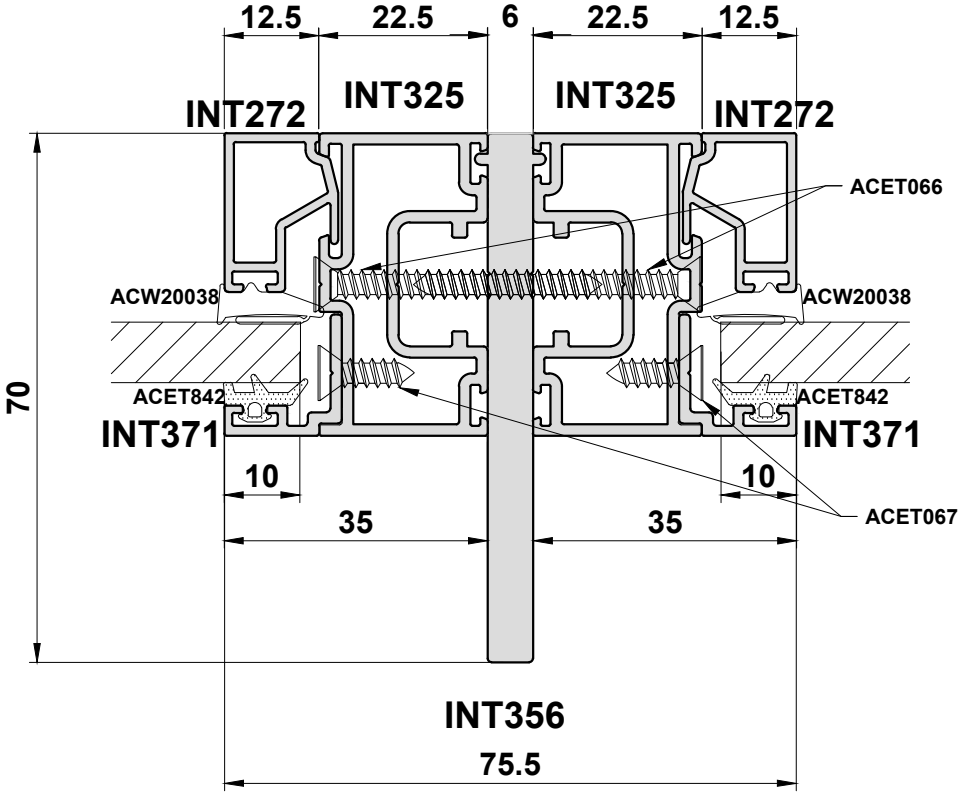

Do Not Scale From This Drawing

Detail 20A

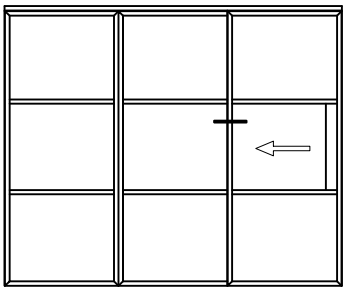

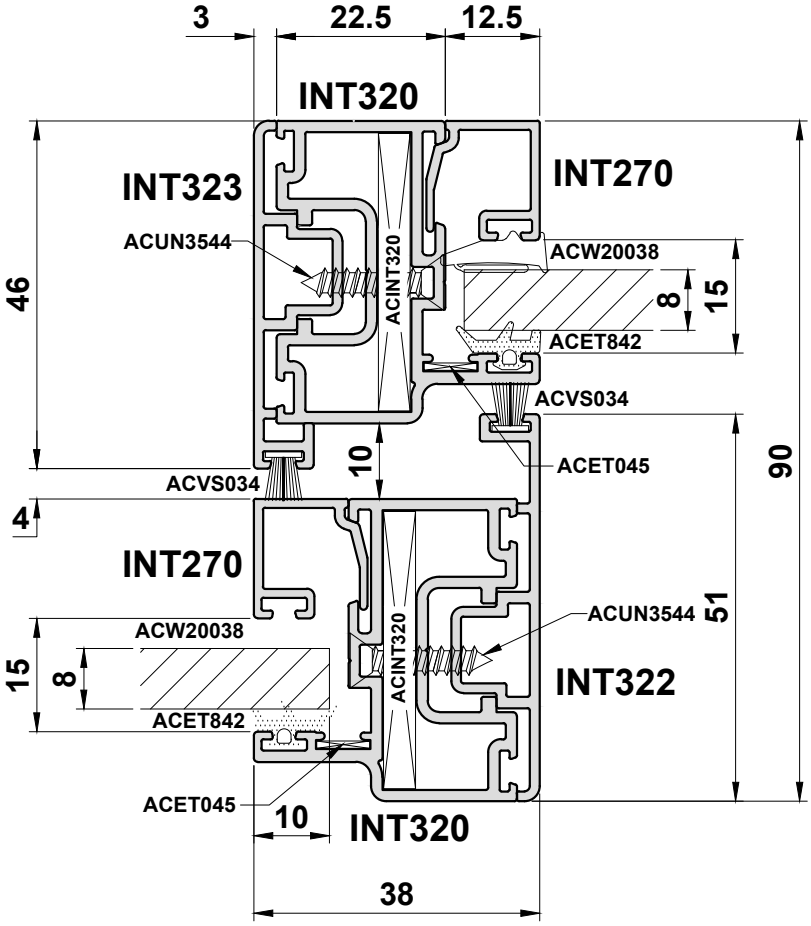

Do Not Scale From This Drawing

Detail 20B

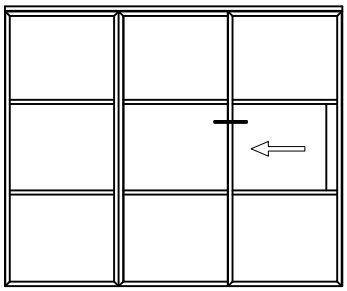

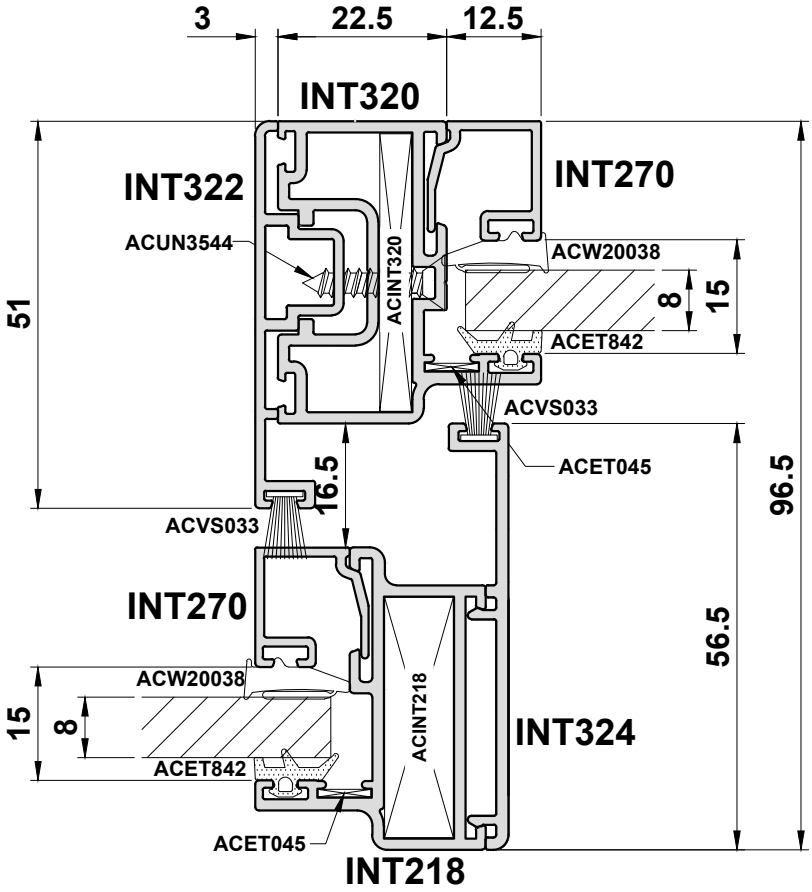

Do Not Scale From This Drawing

Detail 20C

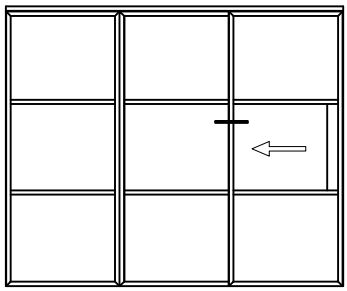

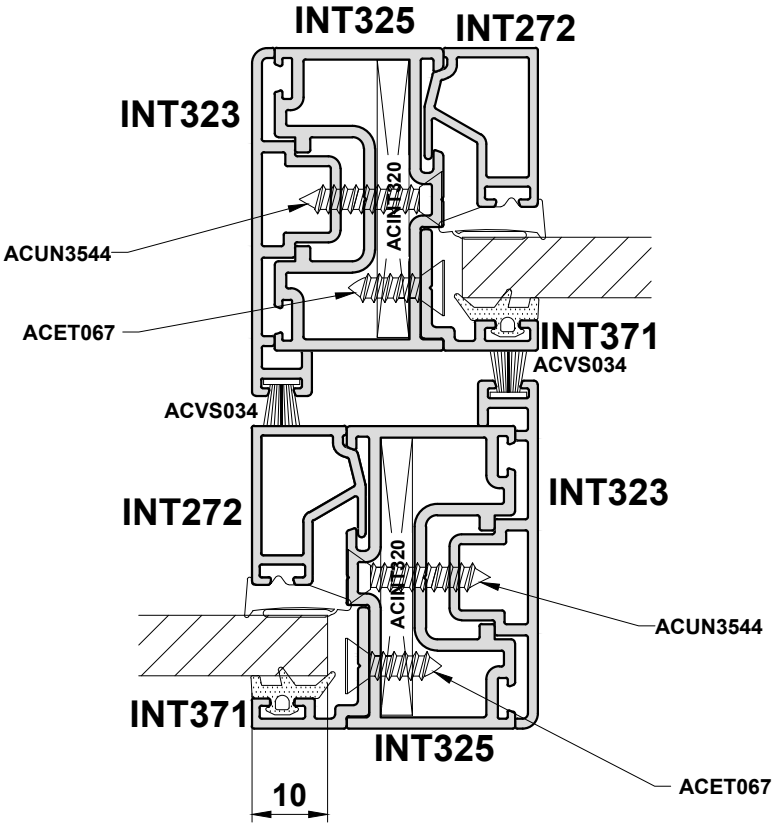

Do Not Scale From This Drawing

Detail 21A

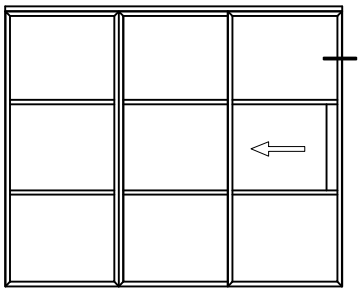

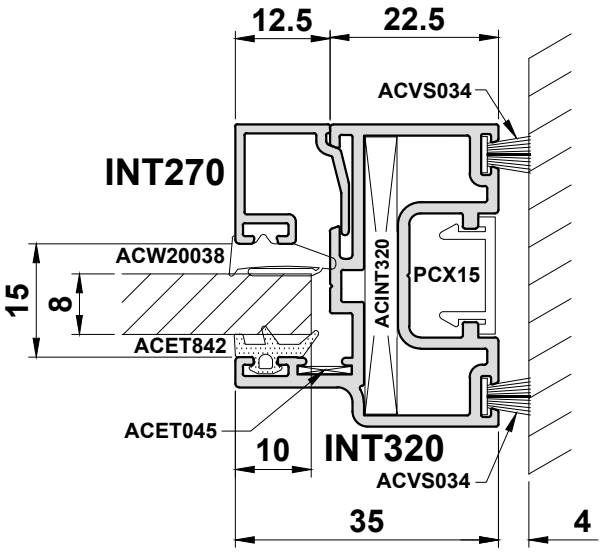

Do Not Scale From This Drawing

Detail 21B

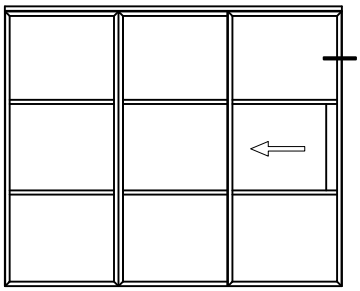

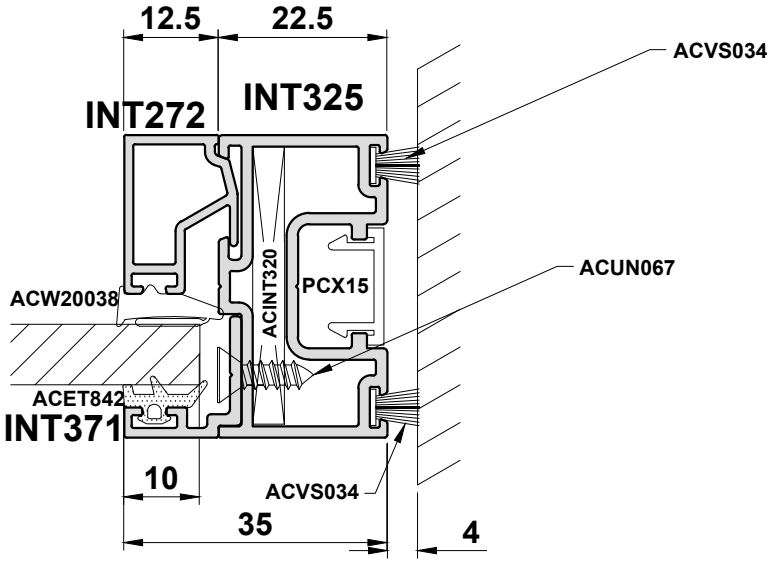

Do Not Scale From This Drawing

Detail 22A

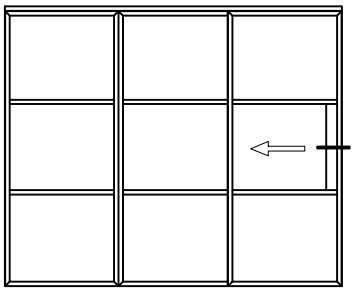

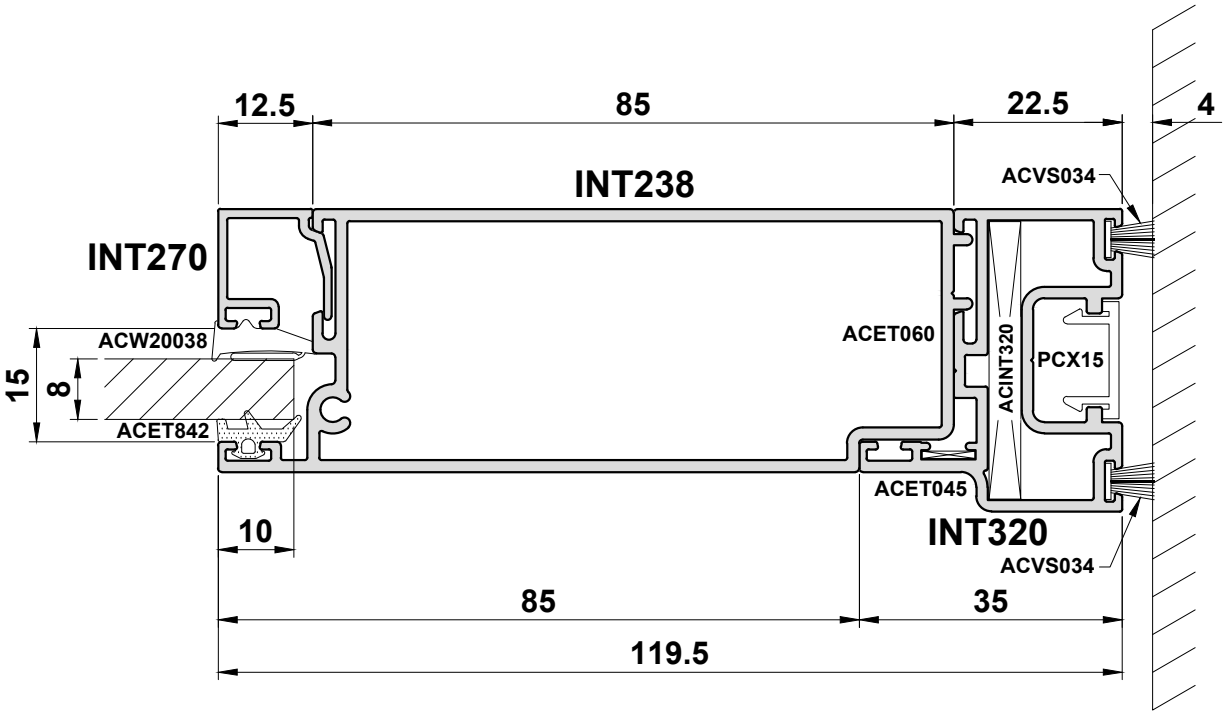

Do Not Scale From This Drawing

ISSUED : March 2025

Detail 22B

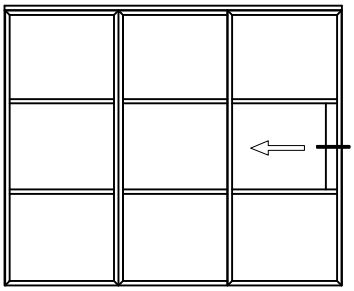

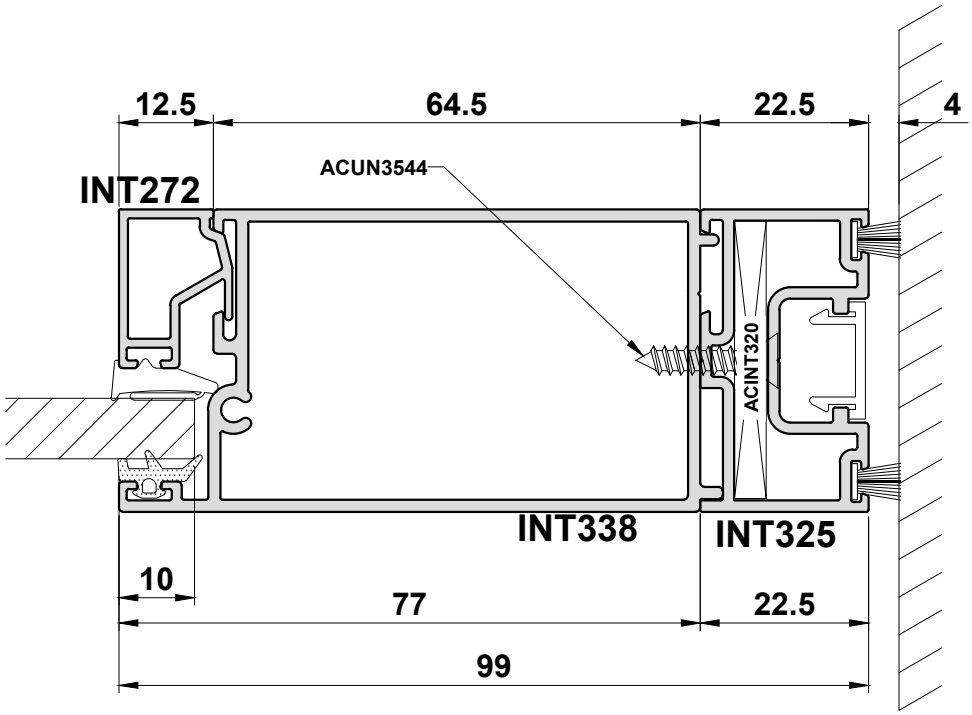

Do Not Scale From This Drawing

Detail 23A

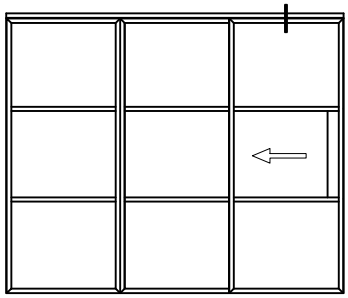

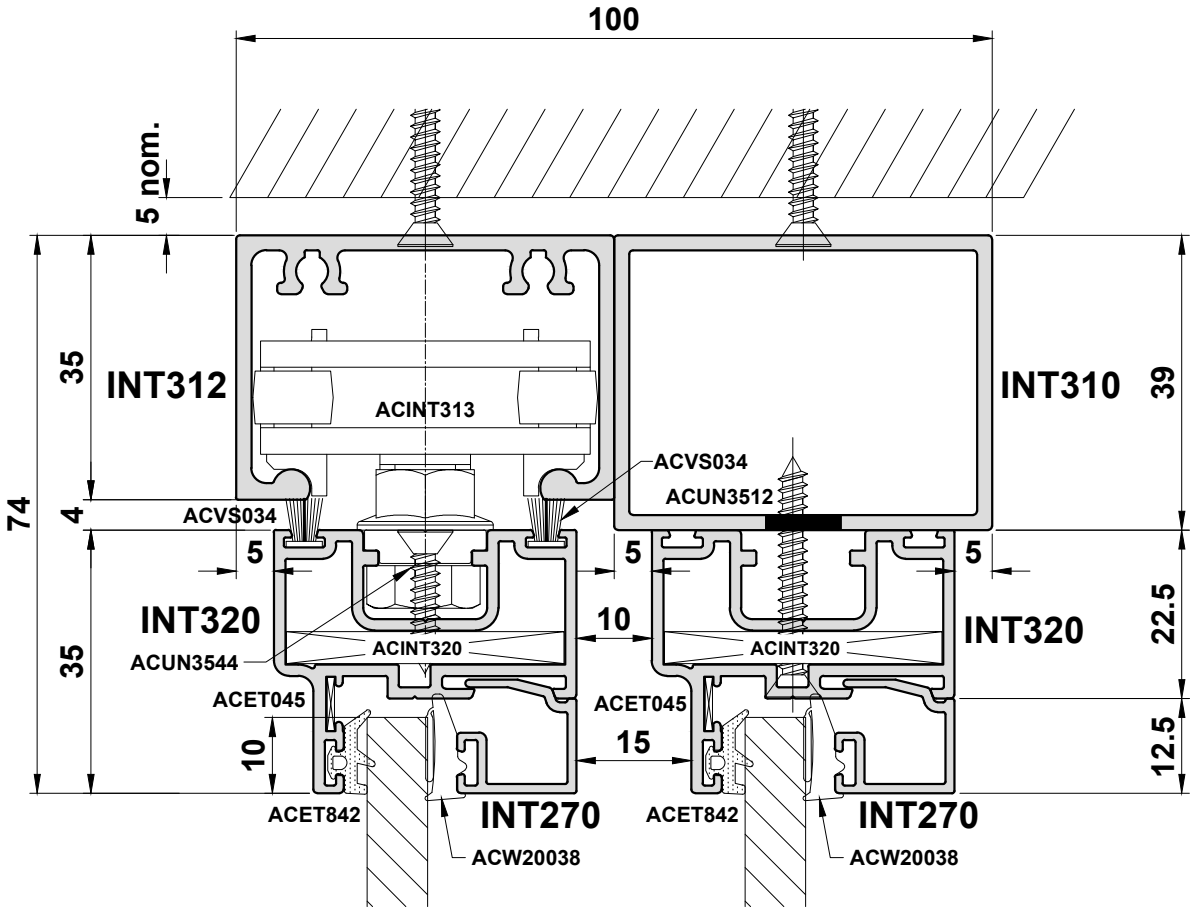

Do Not Scale From This Drawing

Detail 23B

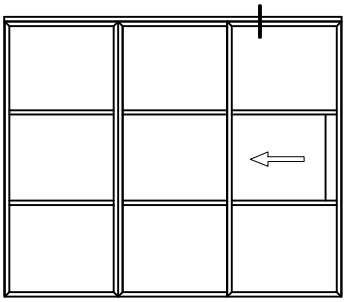

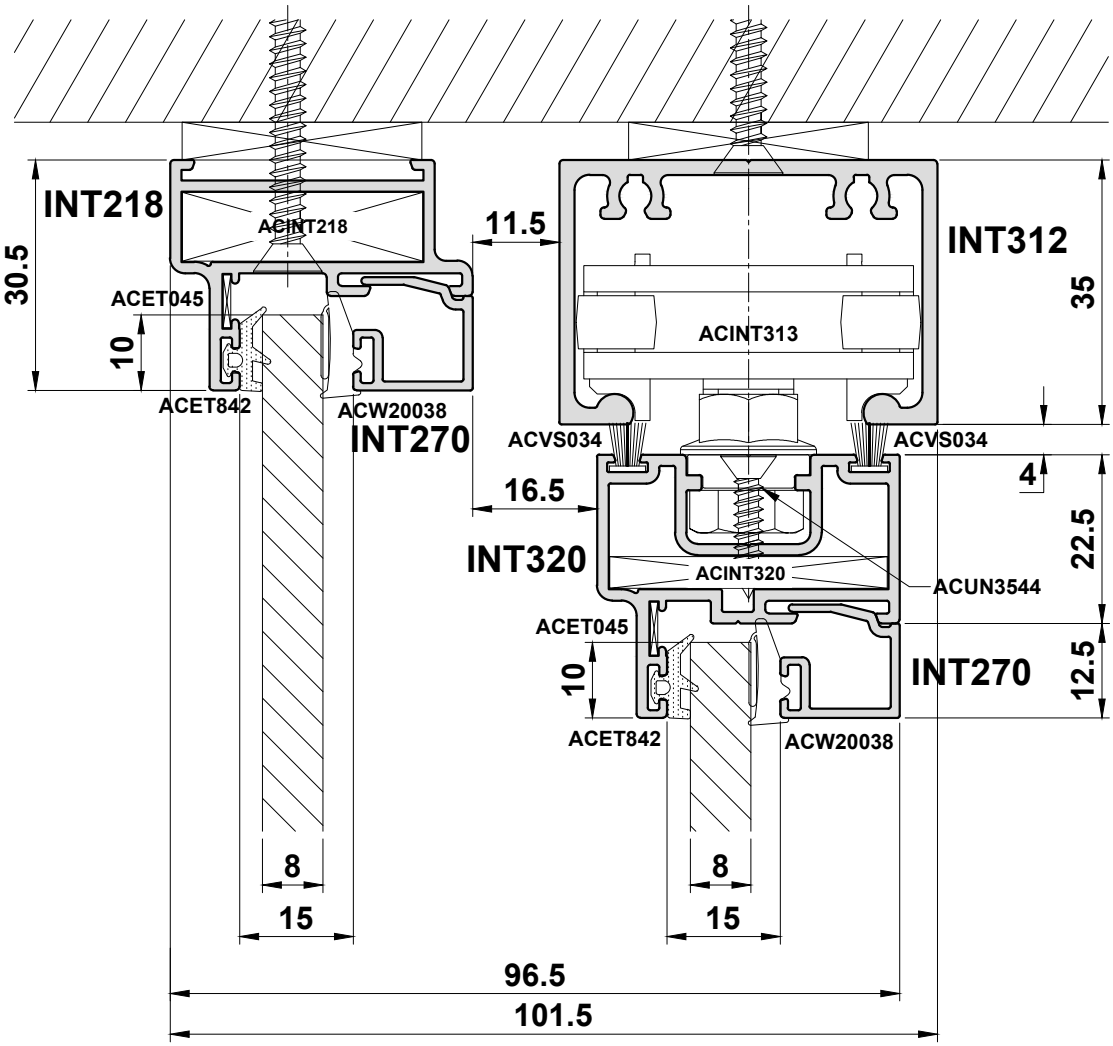

Do Not Scale From This Drawing

Detail 23C

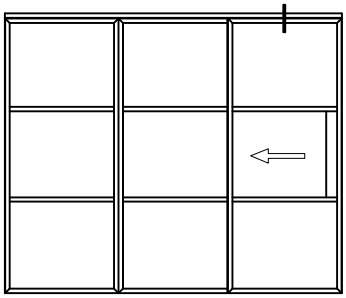

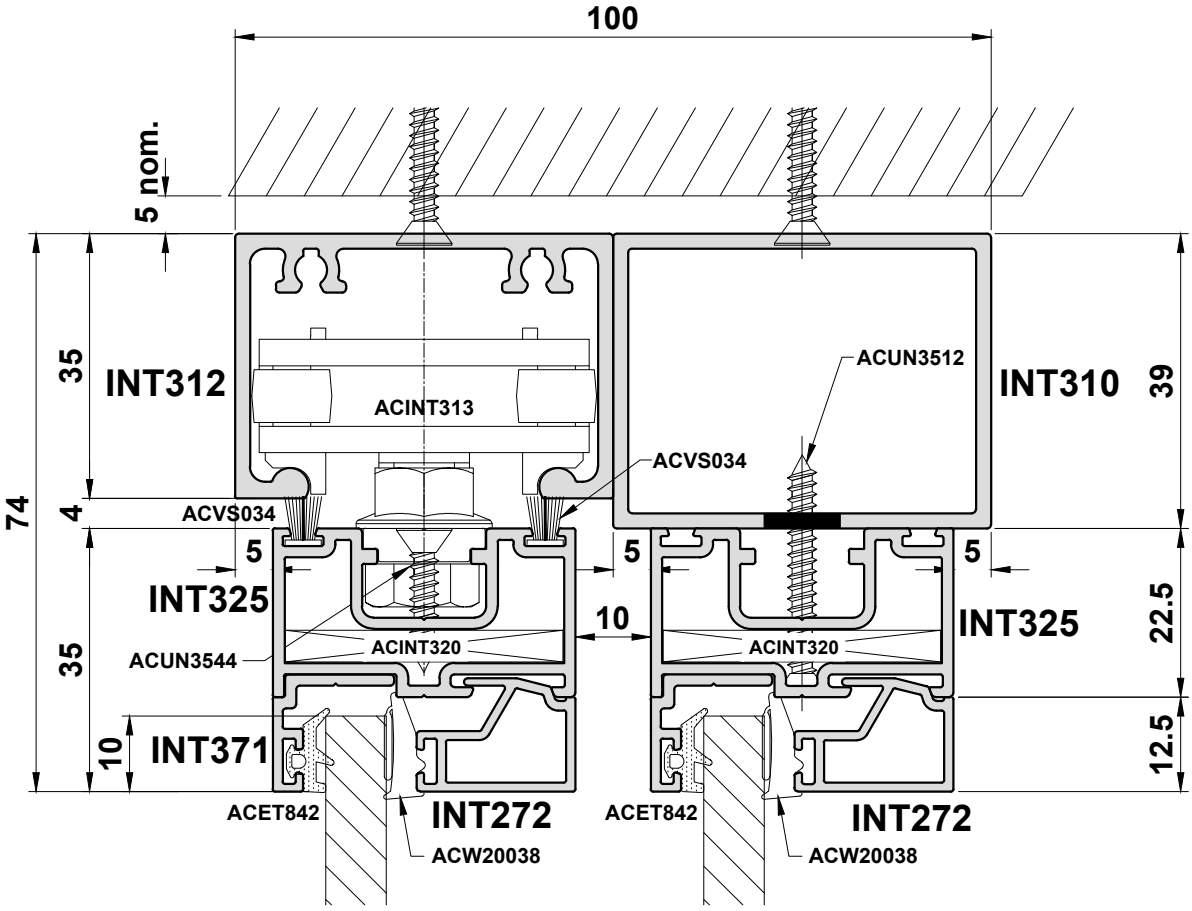

Do Not Scale From This Drawing

Detail 24A

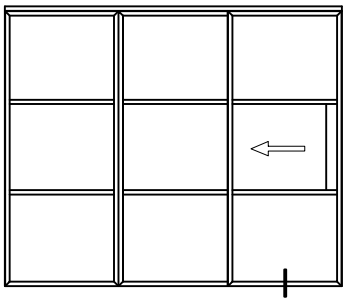

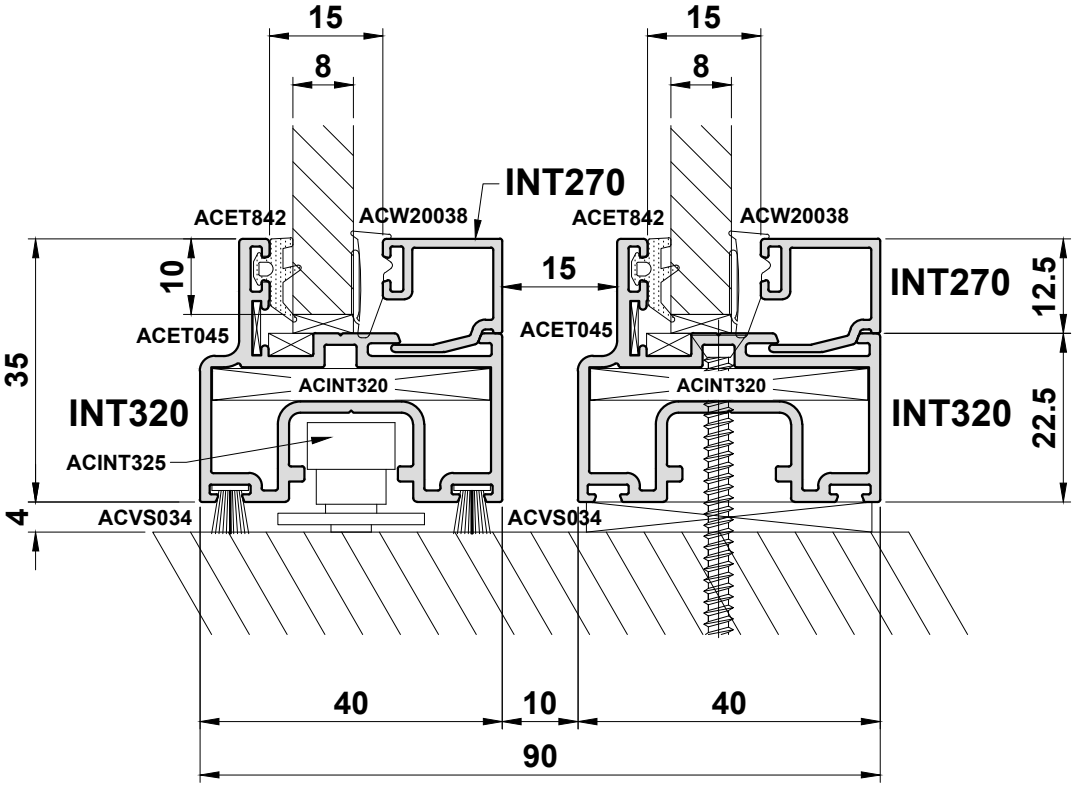

Do Not Scale From This Drawing

Detail 24B

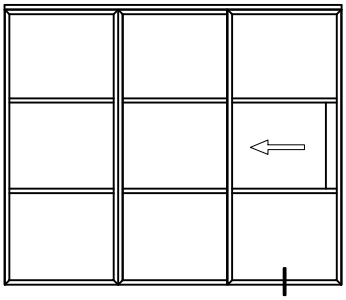

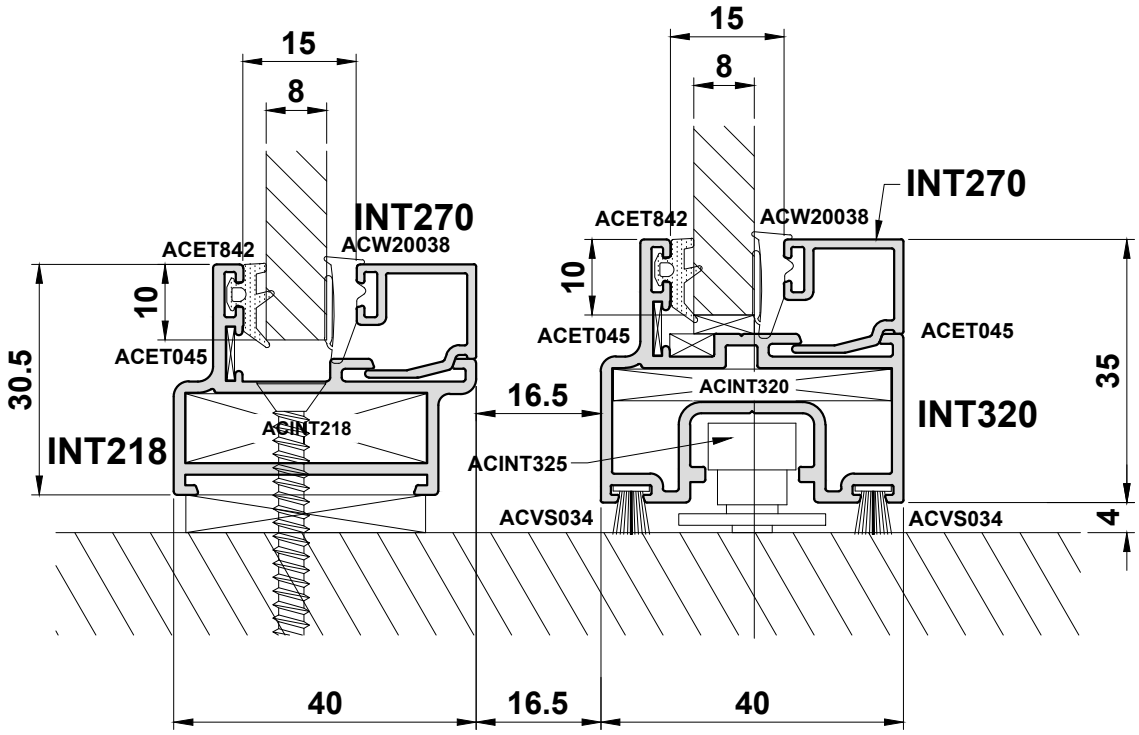

Do Not Scale From This Drawing

Detail 24C

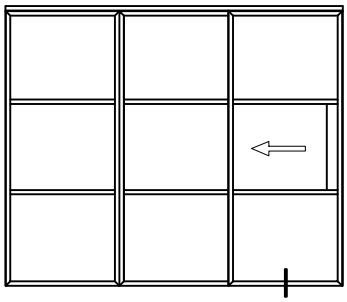

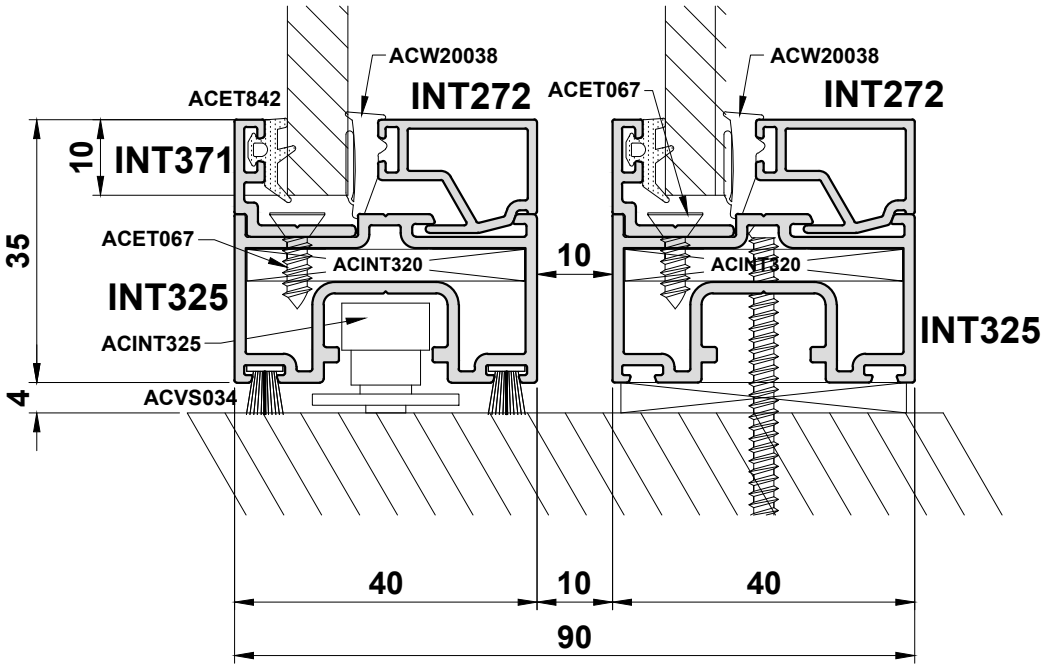

Do Not Scale From This Drawing

Detail 24D

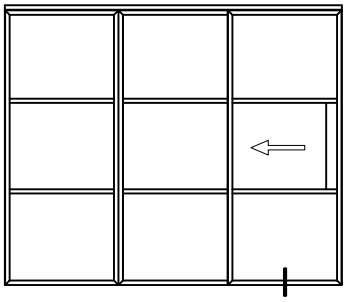

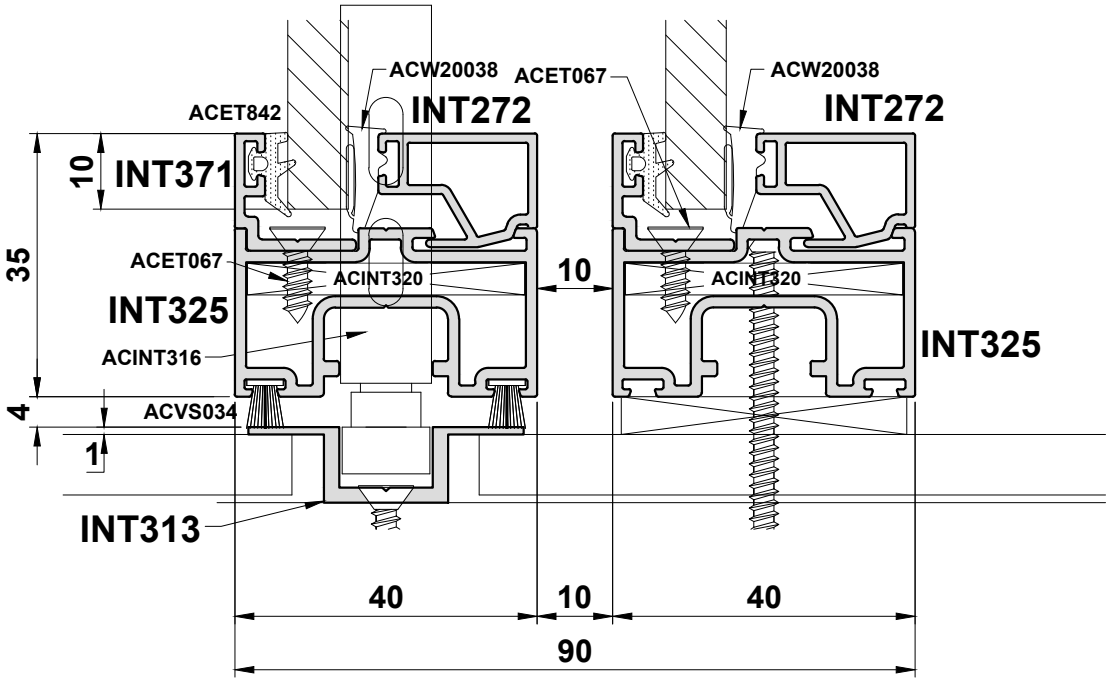

Do Not Scale From This Drawing

Detail 25A

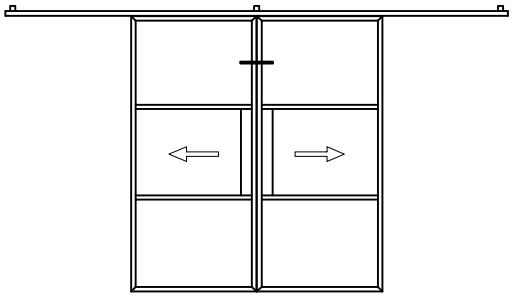

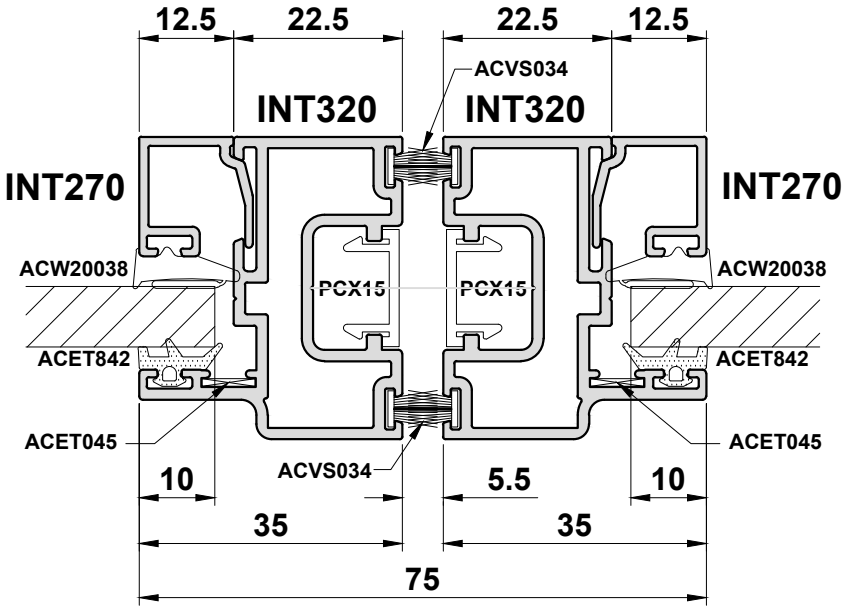

Do Not Scale From This Drawing

Detail 25B

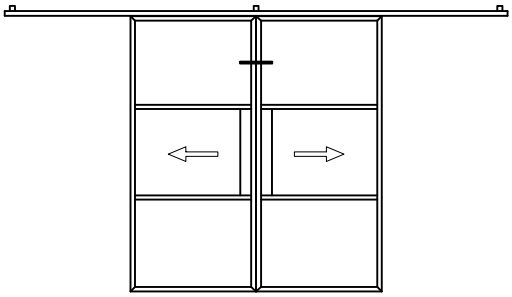

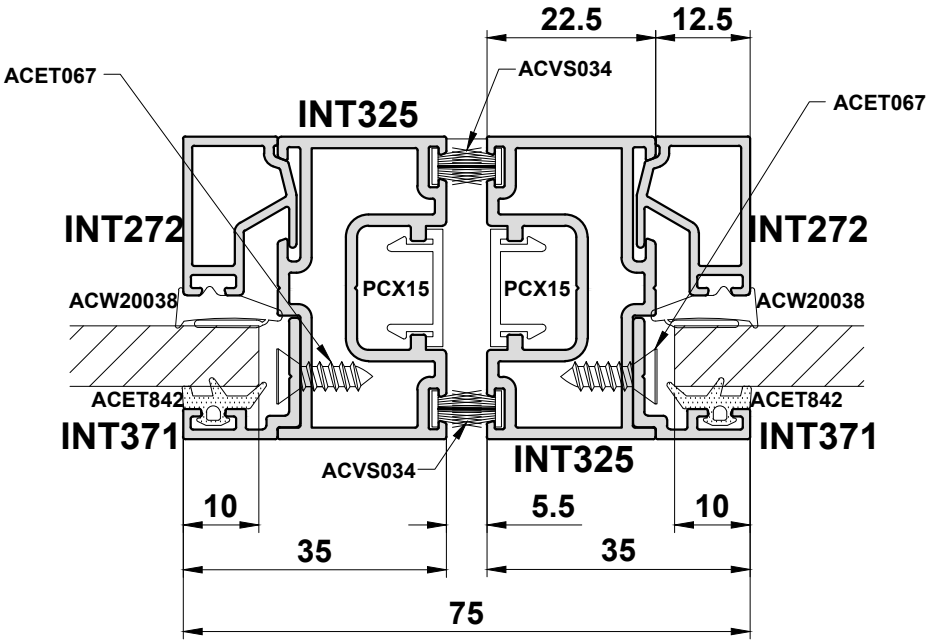

Do Not Scale From This Drawing

Detail 26A

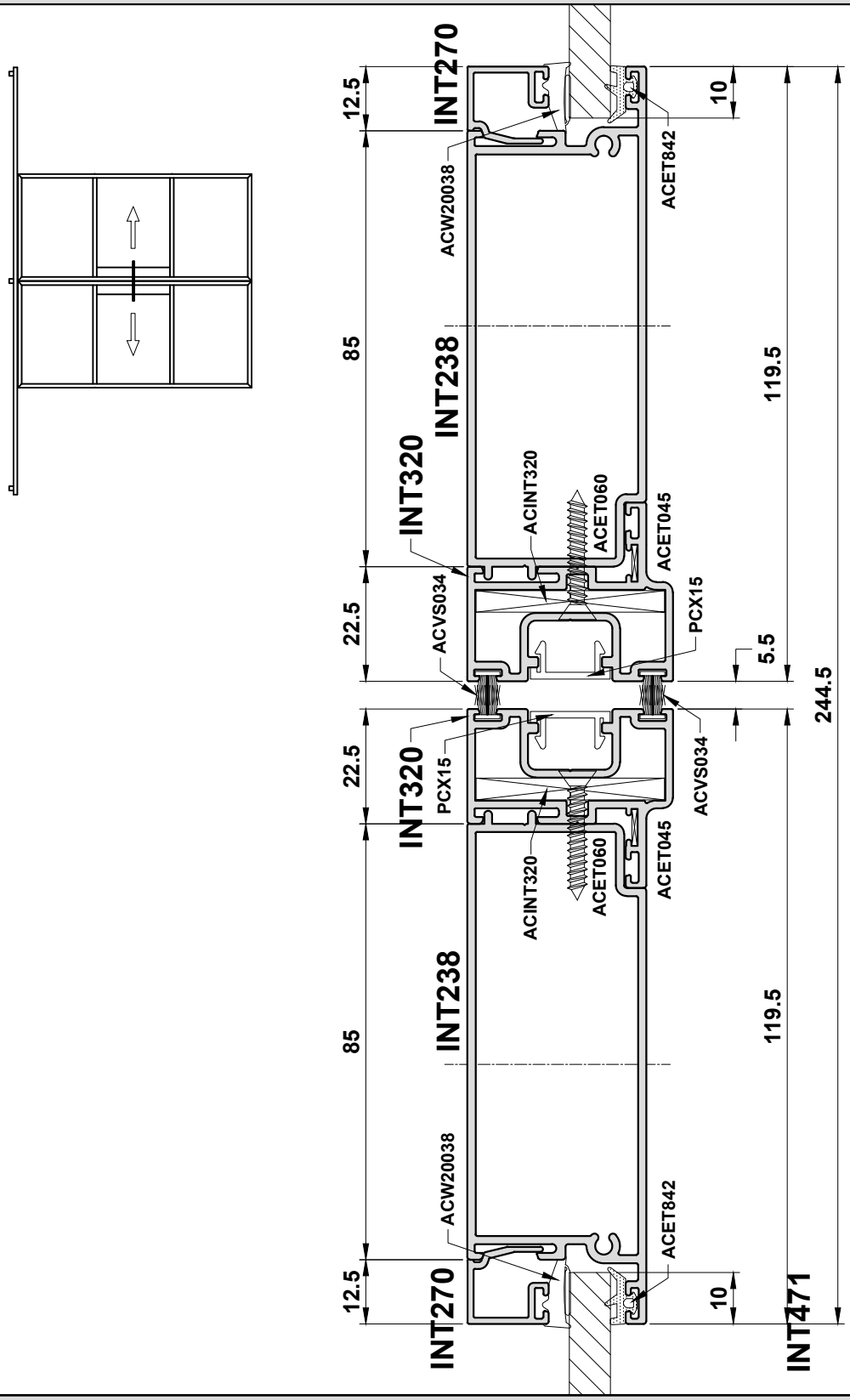

Scale 1:0.8

Do Not Scale From This Drawing

Detail 26B

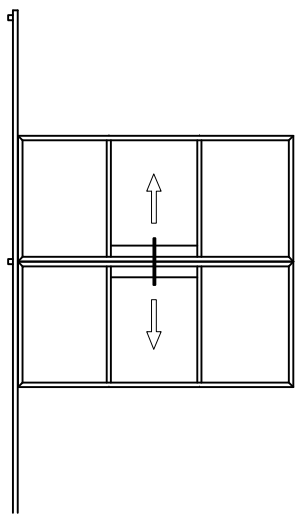

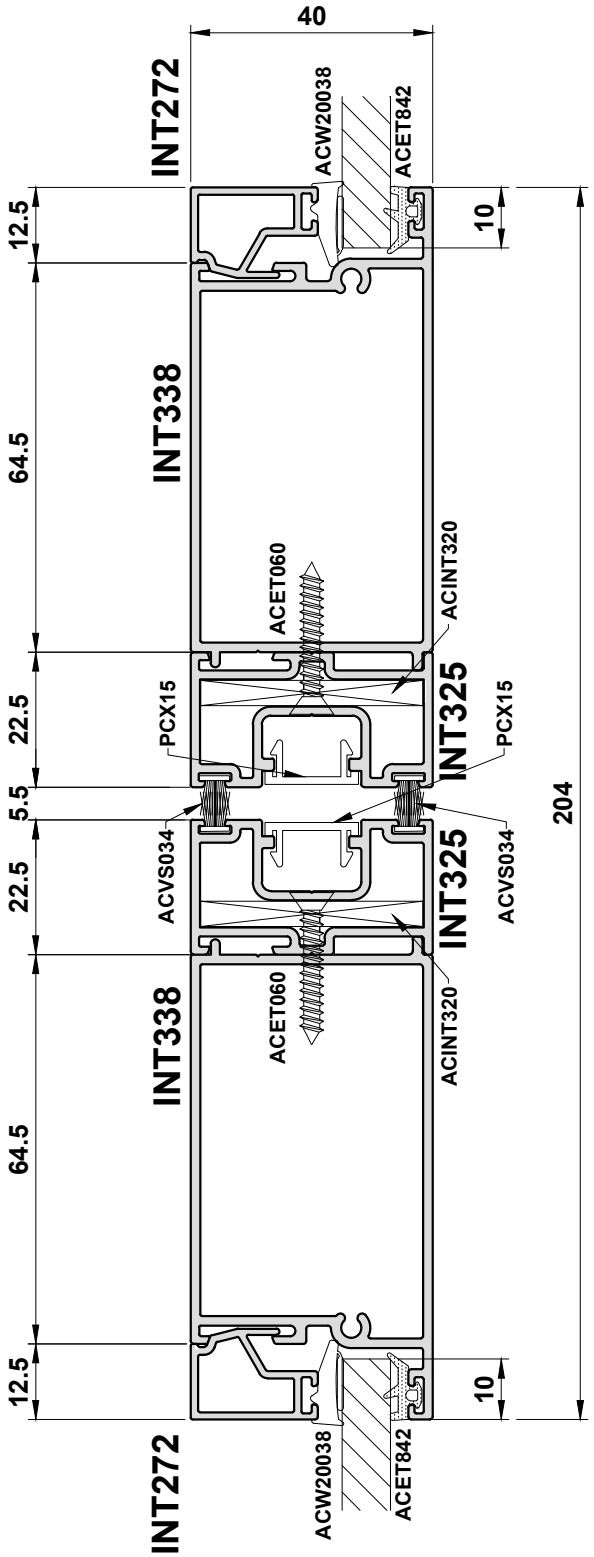

Scale 1:0.8

Do Not Scale From This Drawing

ISSUED : March 2025

Pivot Door

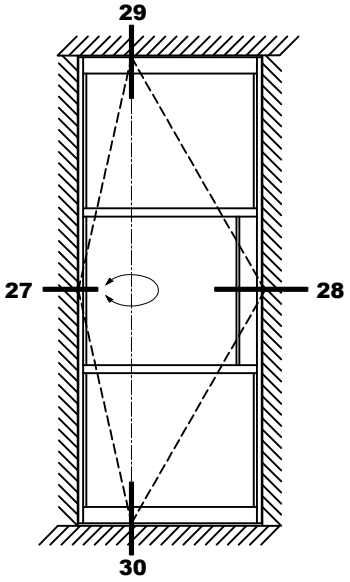

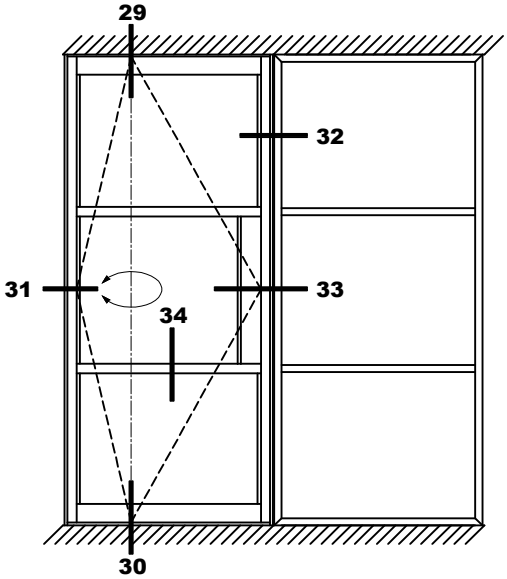

Do Not Scale From This Drawing

Detail 27

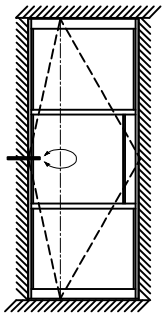

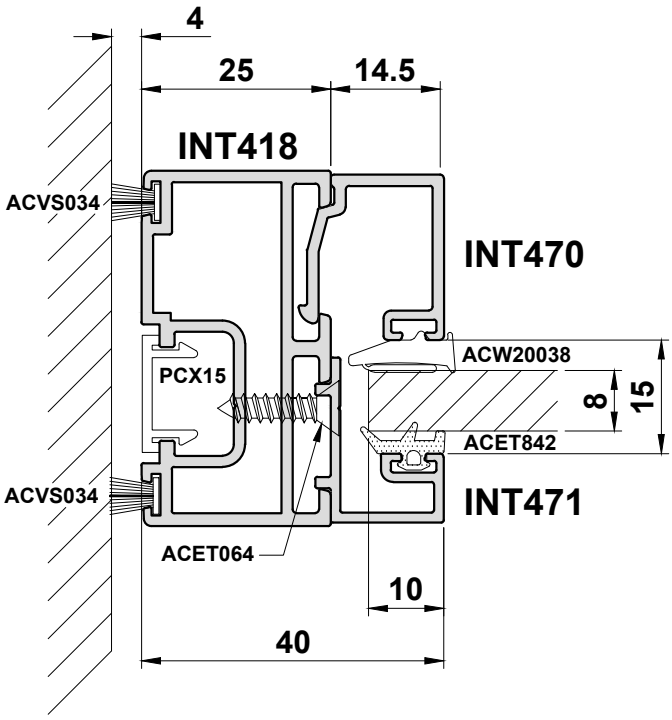

Do Not Scale From This Drawing

Detail 28

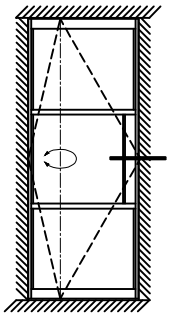

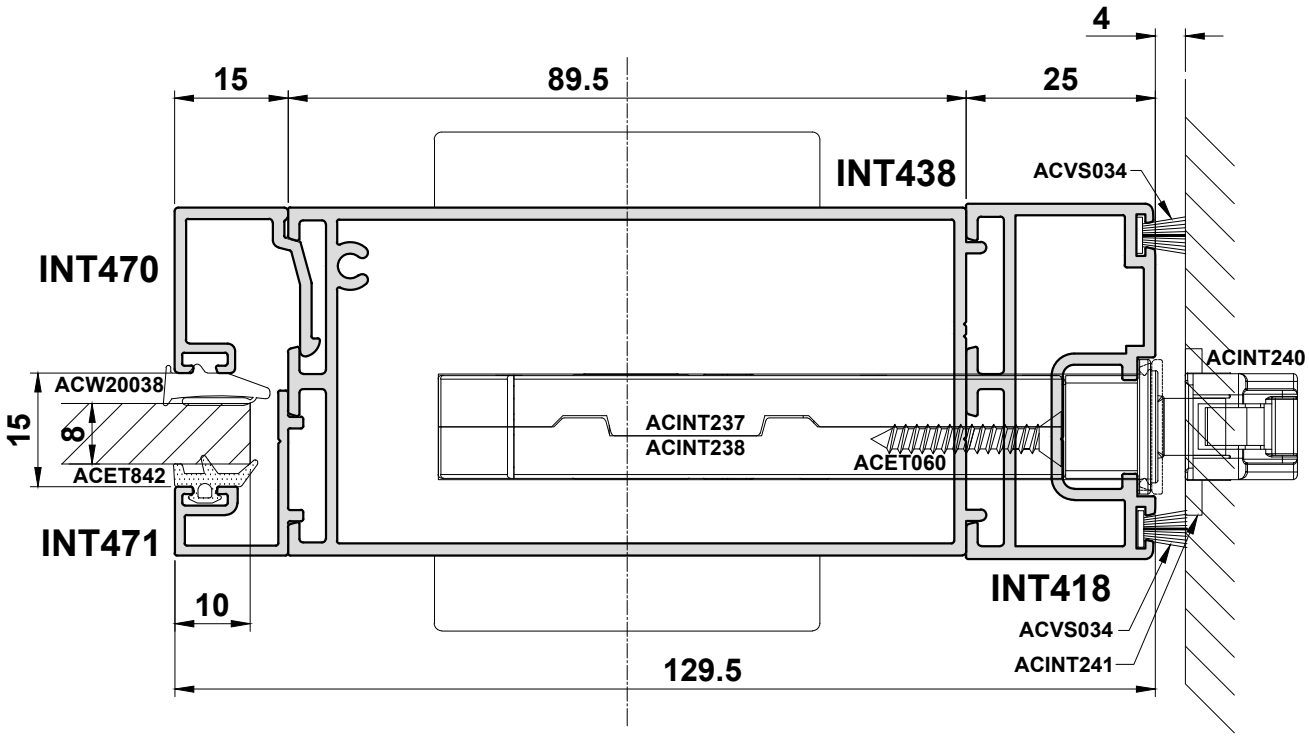

Do Not Scale From This Drawing

Detail 29

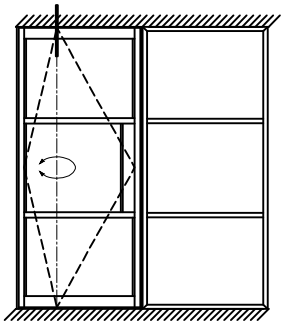

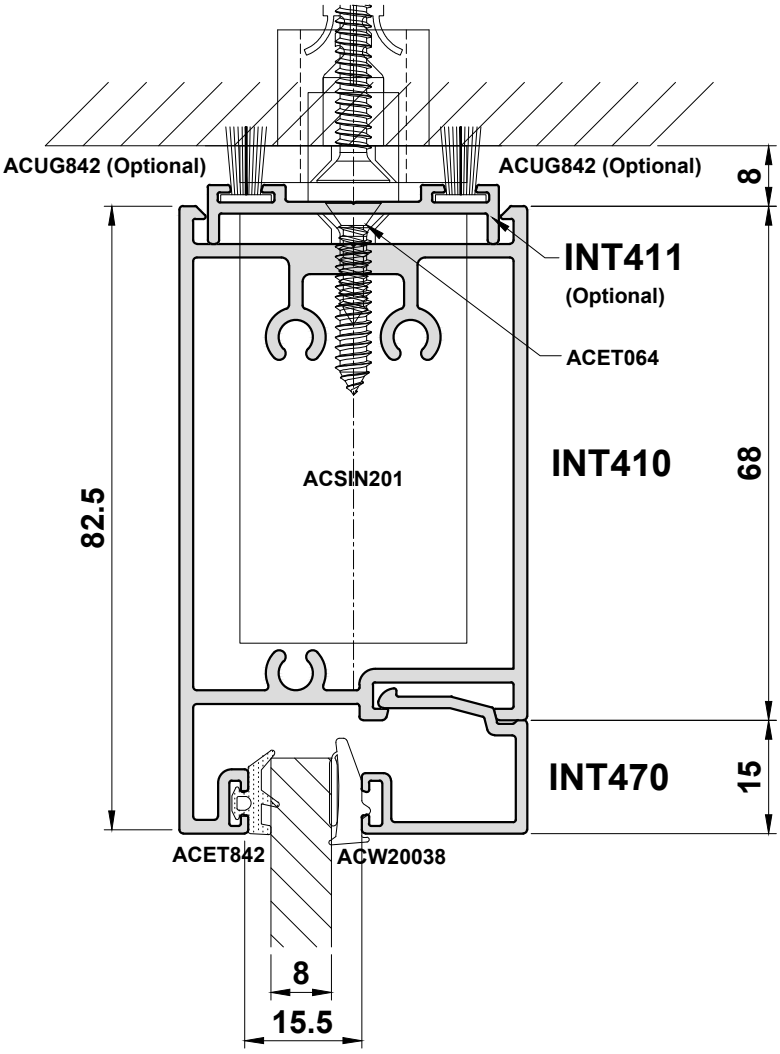

Do Not Scale From This Drawing

ISSUED : March 2025

Detail 30

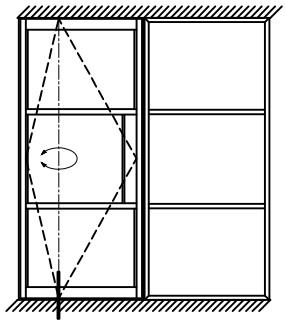

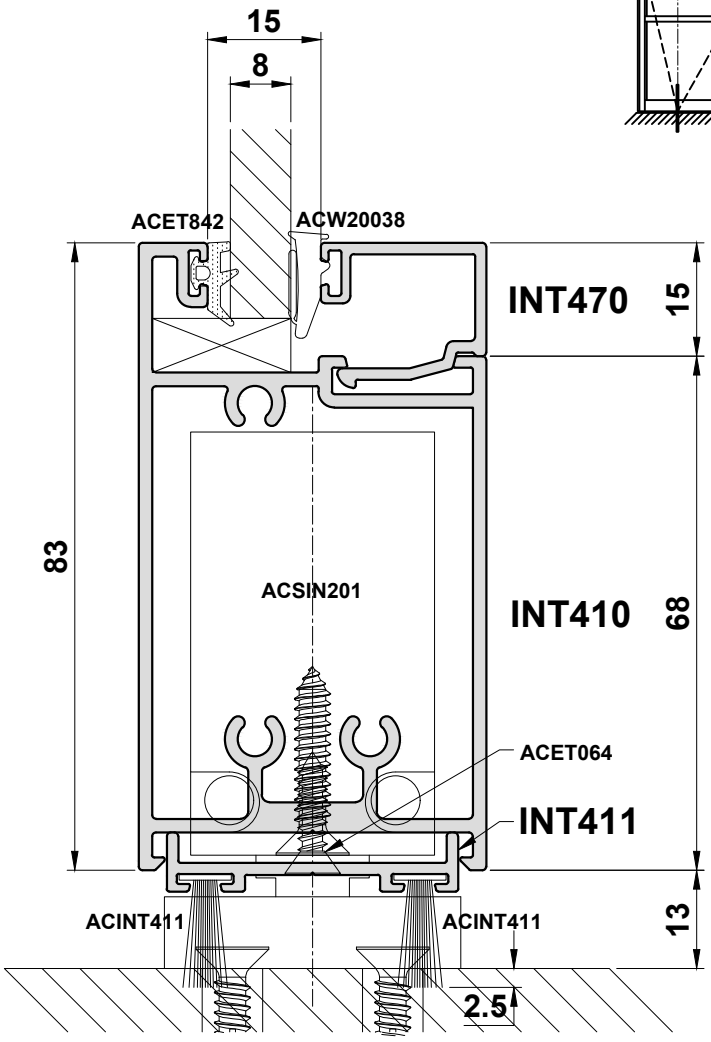

Do Not Scale From This Drawing

Detail 31

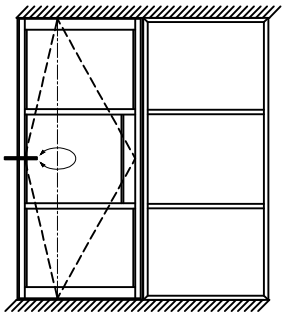

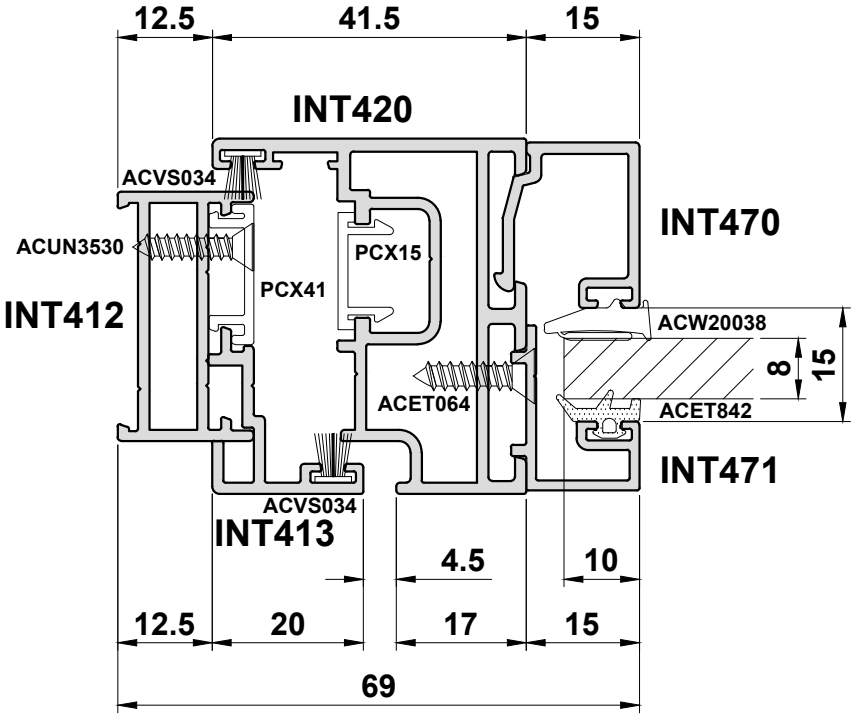

Do Not Scale From This Drawing

ISSUED : March 2025

Detail 32

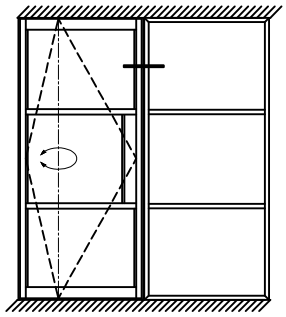

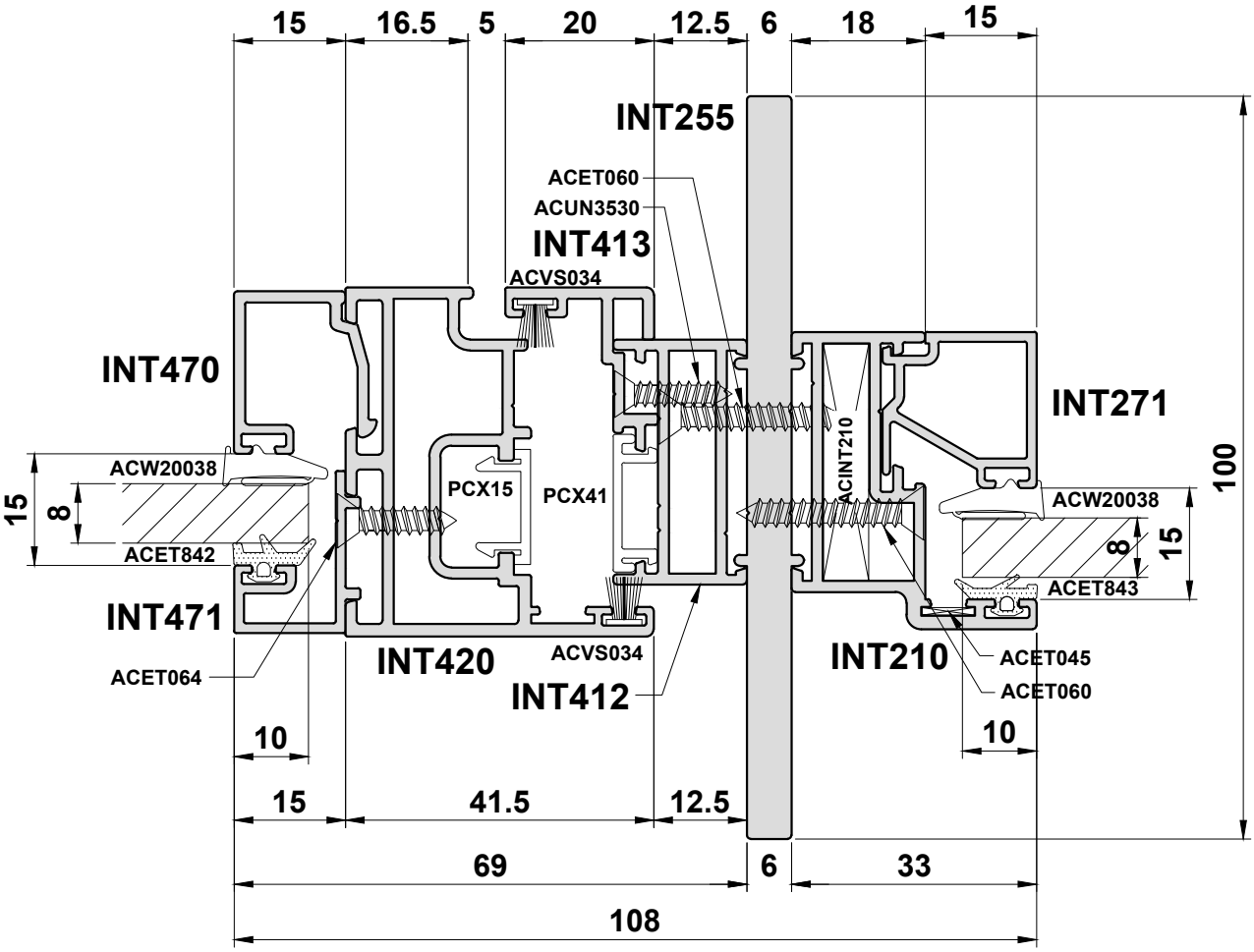

Do Not Scale From This Drawing

Detail 33

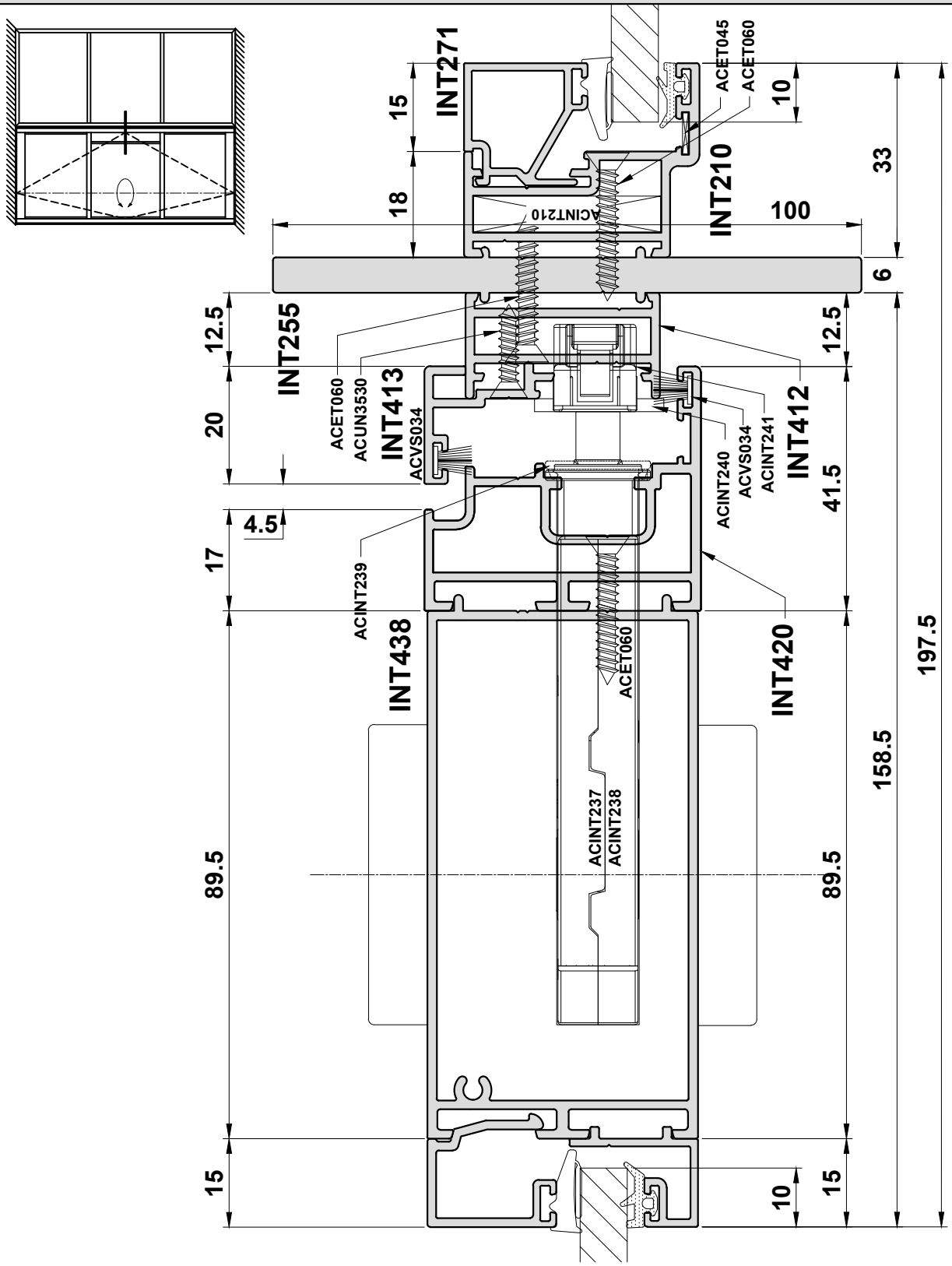

Do Not Scale From This Drawing

ISSUED : March 2025

Detail 34

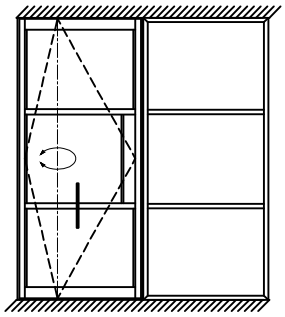

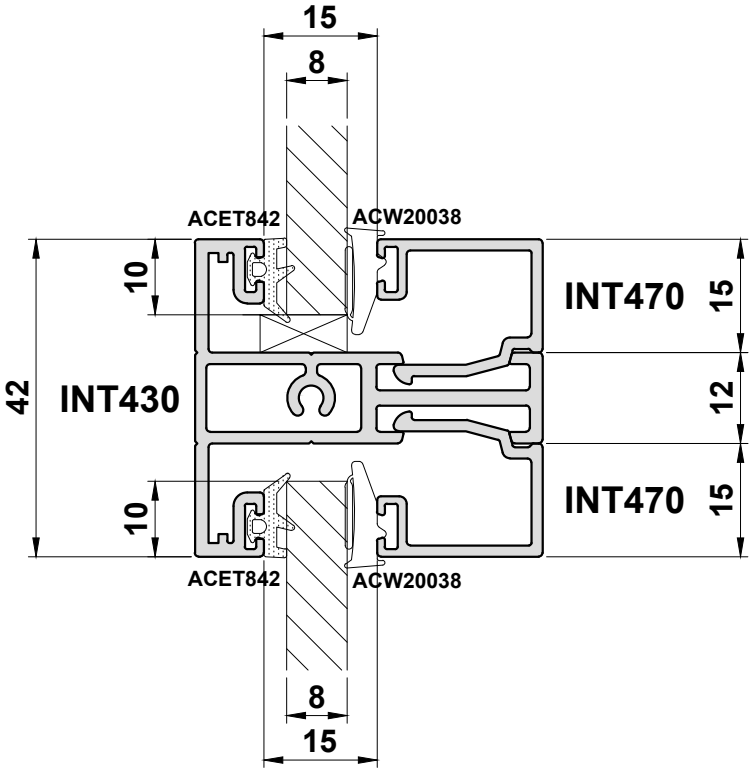

Do Not Scale From This Drawing

Corner Posts

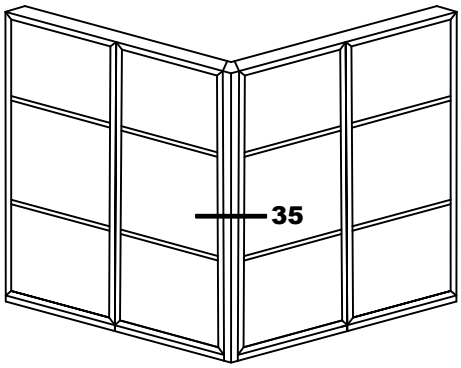

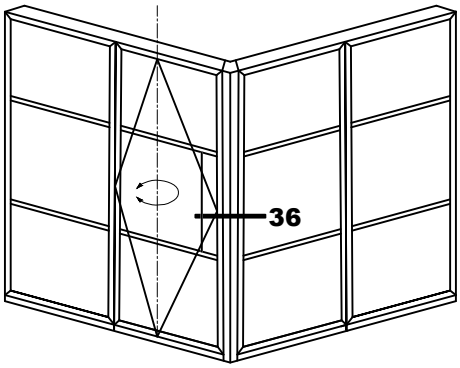

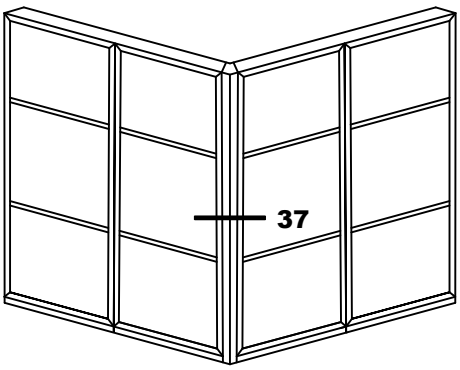

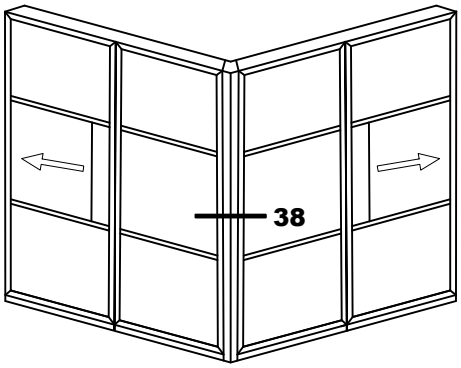

Do Not Scale From This Drawing

ISSUED : March 2025

Detail 35A

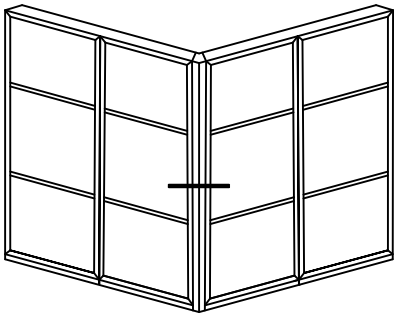

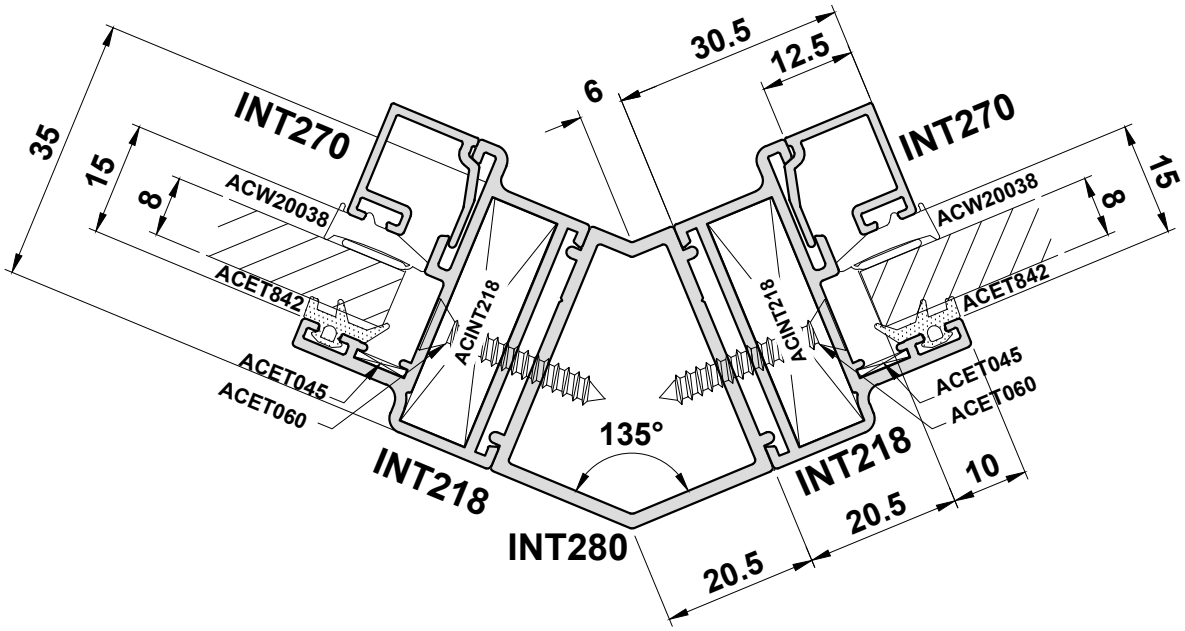

Do Not Scale From This Drawing

Detail 35B

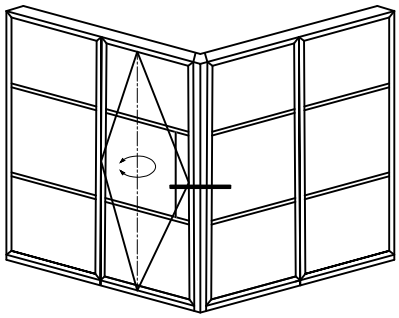

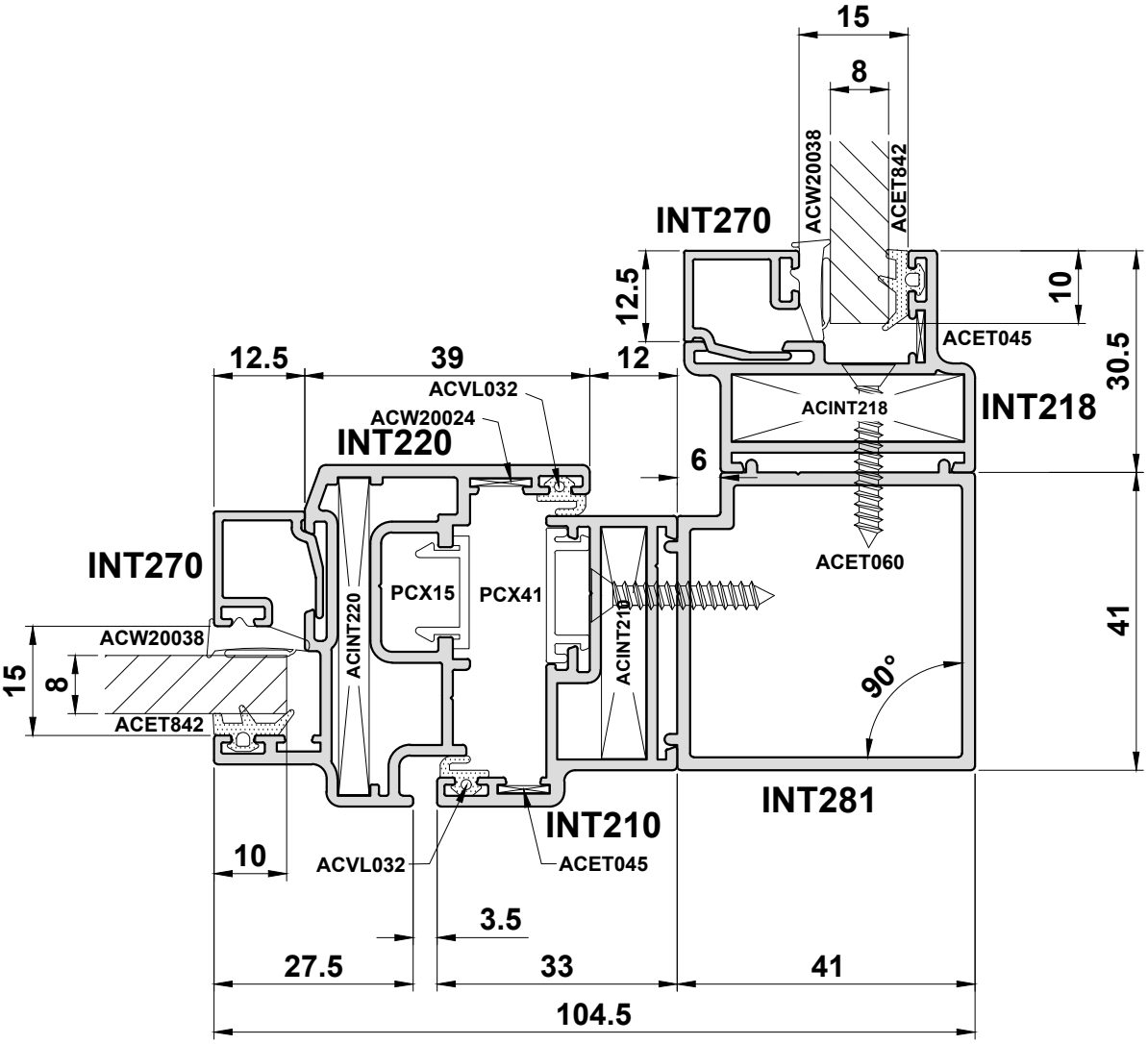

Do Not Scale From This Drawing

ISSUED : March 2025

Detail 35C

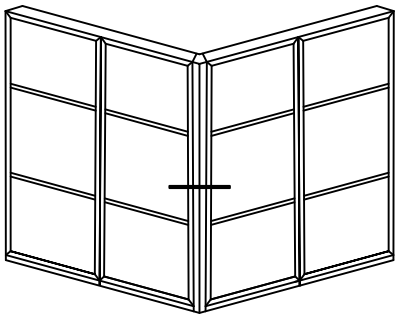

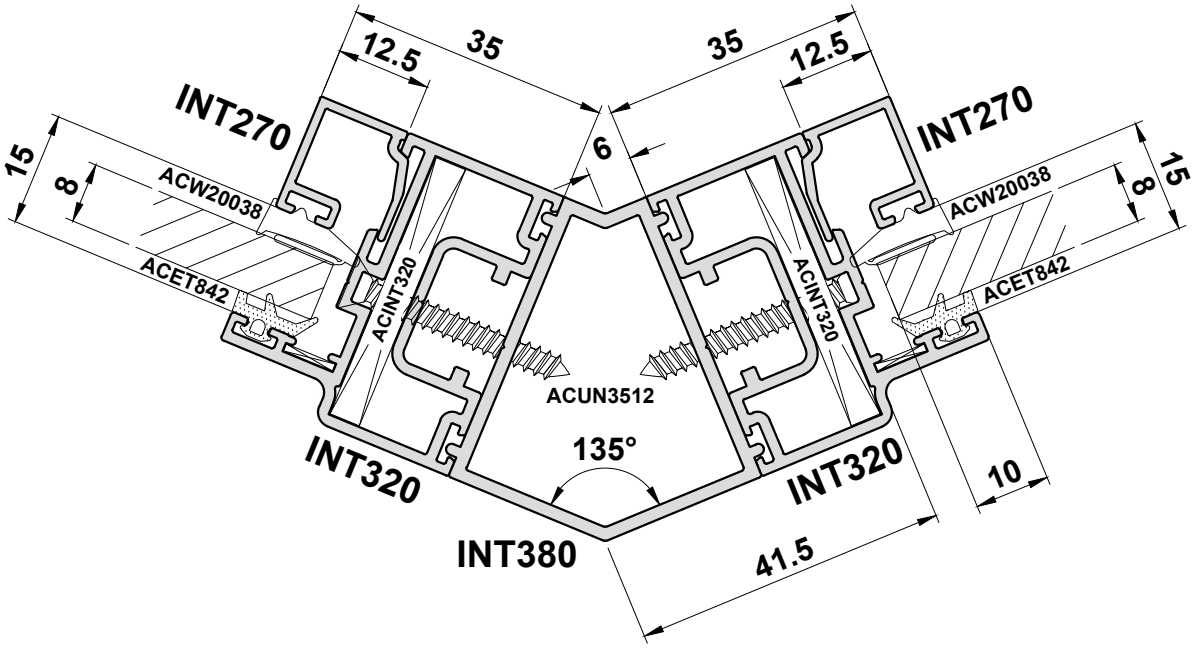

Do Not Scale From This Drawing

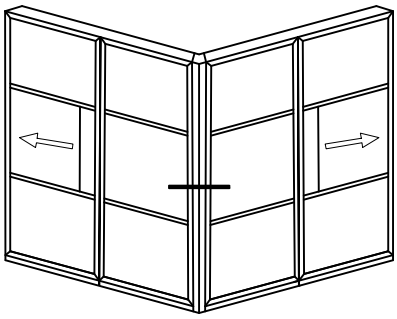

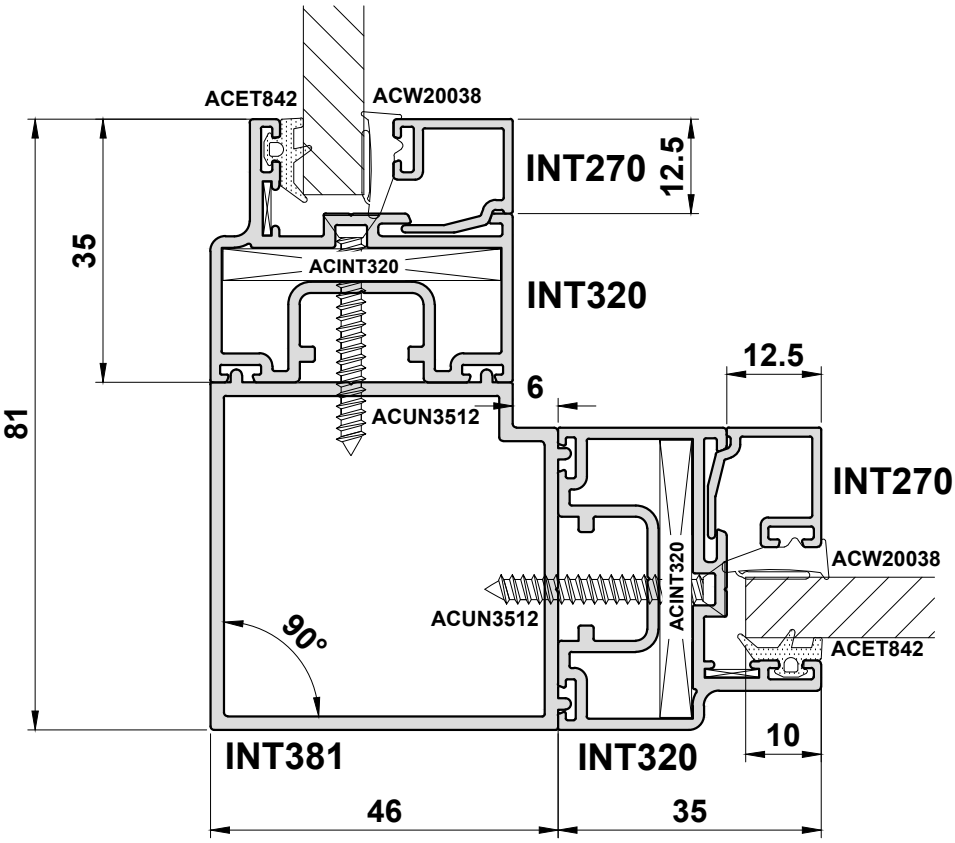

Do Not Scale From This Drawing

ISSUED : March 2025

Section D

Statics

Fixed Screen - Couplers

General Size Limitations are shown on Page A04.

Section D

GENERAL INFORMATION - STATICS

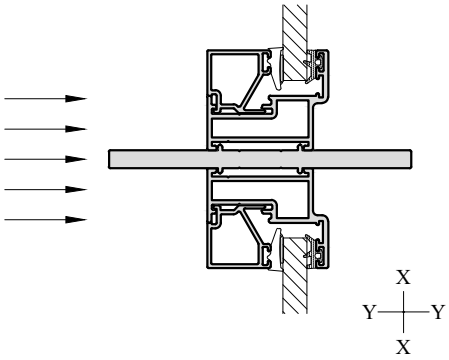

The position of the axes is an indication for the use and application of the moments of inertia (Ix and Iy) and the section modulus (Wx and Wy). We always choose the values of the axis perpendicular to the load to resist it.

To resist the loads we use the values Ix and Wx.

EXAMPLE

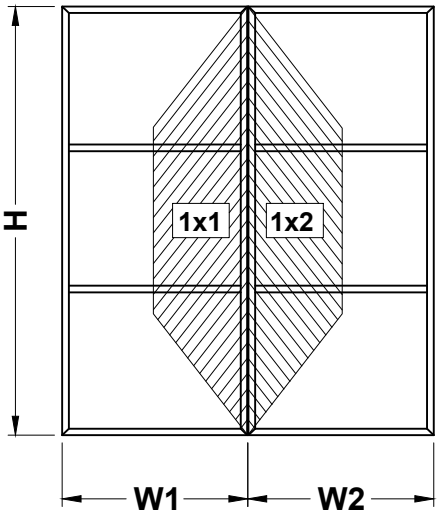

H = 210cm

W1 = 100cm

W2 = 100cm

P = 800 Pa

1) Determine Ixx value for the couplers (if required) using the Specification Wizard

Ixx = 27.6 cm^4

2) Determine profile combinations

Do Not Scale From This Drawing

Section D

PROFILE COMBINATIONS - IX - VERTICAL COUPLER : STATICS

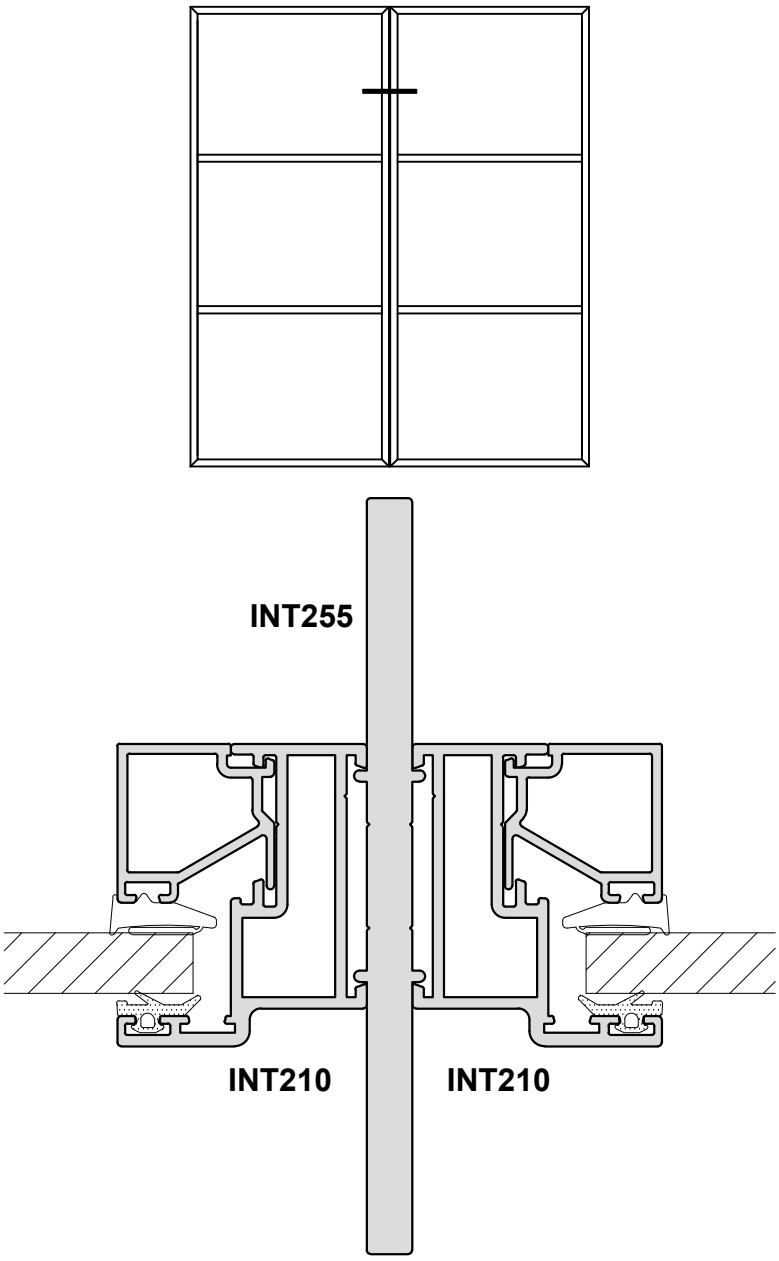

Ixx = 58.2 cm^4

Do Not Scale From This Drawing

Section D

PROFILE COMBINATIONS - IX - VERTICAL COUPLER : STATICS

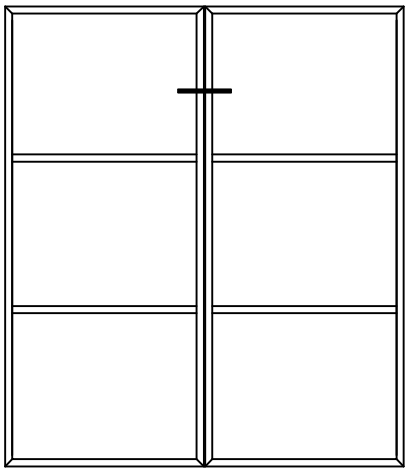

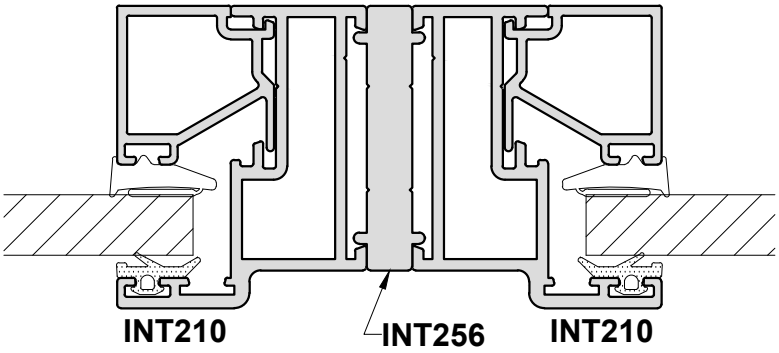

Ixx = 10.4 cm^4

Do Not Scale From This Drawing

Section D

PROFILE COMBINATIONS - IX - VERTICAL COUPLER : STATICS

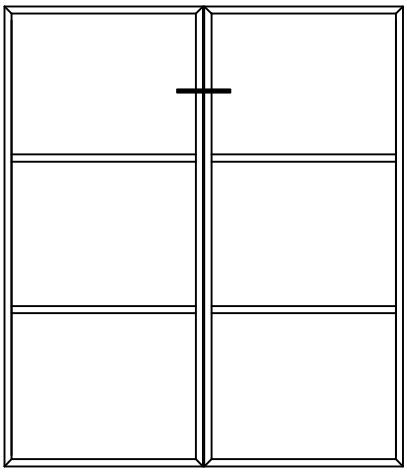

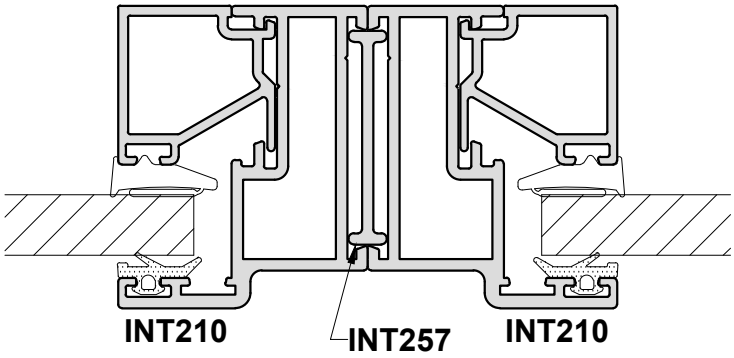

Ixx = 8.1 cm^4

Section D

RECOMMENDED DESIGN FIXED SCREENS LIMITATIONS

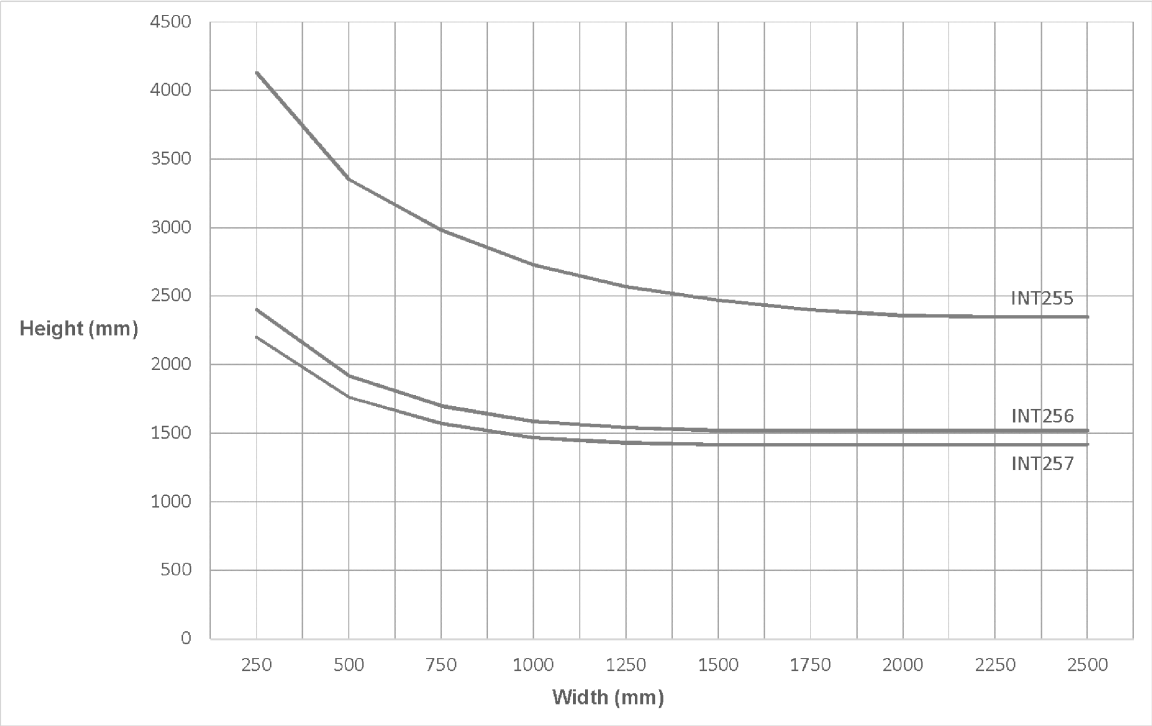

IMPORTANT NOTE:

Fixed screen sizes are based on a coupler limit at 0.8kN/m.

Size limits can vary depending on application and the category of building.

Please refer to Approved Document K and CWCT for further information on the required loading for your project.

For advise on screen sizes outside of the recommended design limitations, please contact the Technical Department at Smart Systems Ltd Tel: 01934 876100

Do Not Scale From This Drawing

Section D

PROFILE COMBINATIONS - IX - HORIZONTAL COUPLER : STATICS

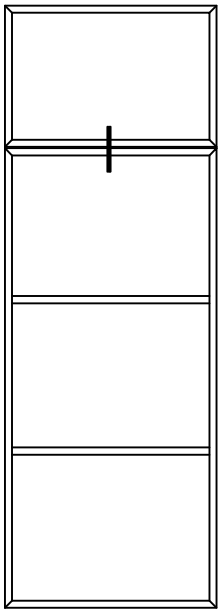

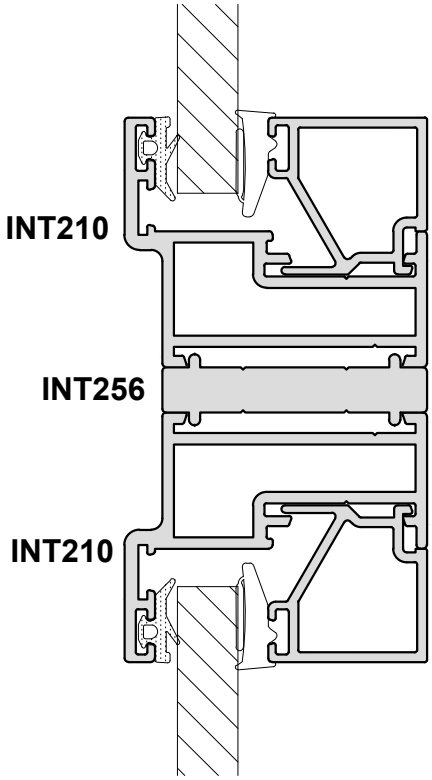

Ixx = 10.4 cm^4
Iyy = 12.8 cm^4

Do Not Scale From This Drawing

ISSUED: March 2025

Section D

PROFILE COMBINATIONS - IX - HORIZONTAL COUPLER : STATICS

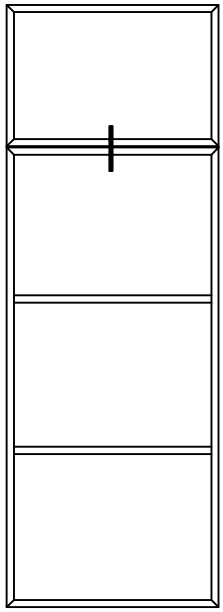

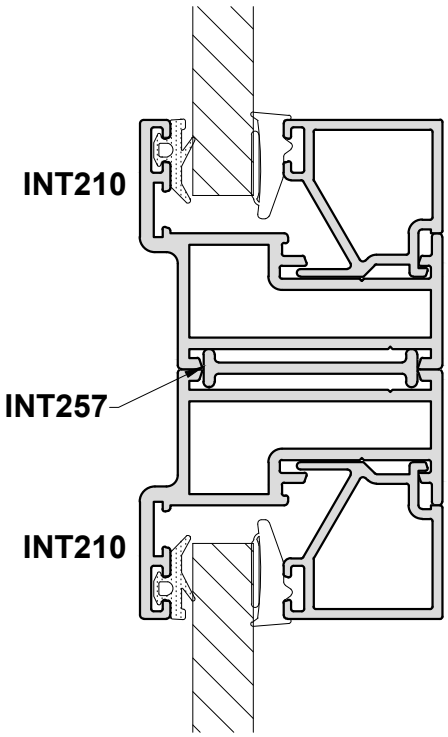

Ixx = 8.1 cm^4
Iyy = 9.2 cm^4

Do Not Scale From This Drawing

Section D

PROFILE COMBINATIONS - IX - VERTICAL COUPLER : STATICS

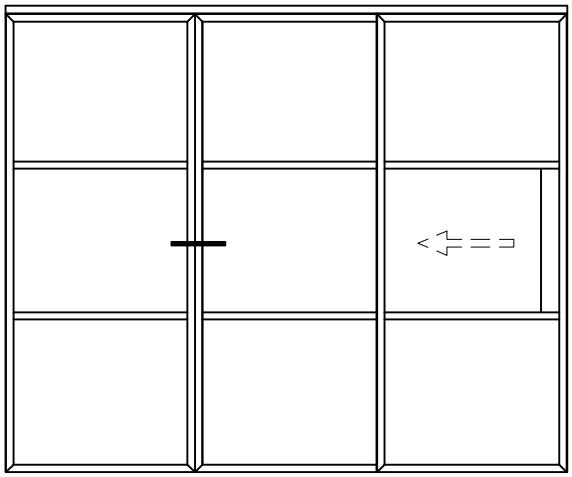

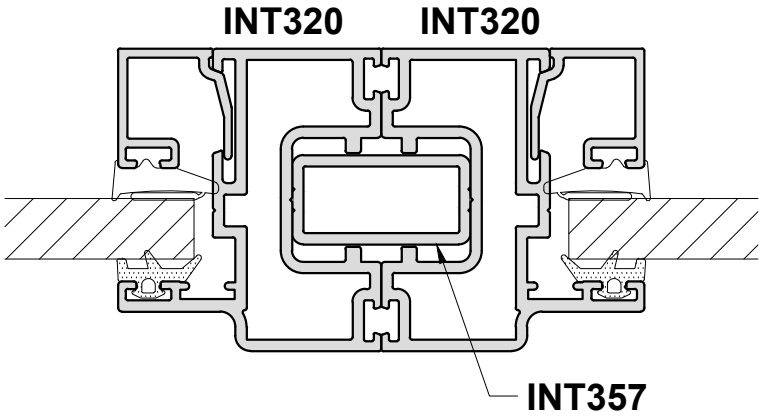

Ixx = 9.6 cm^4

Do Not Scale From This Drawing

ISSUED: March 2025

Section D

PROFILE COMBINATIONS - IX - VERTICAL COUPLER : STATICS

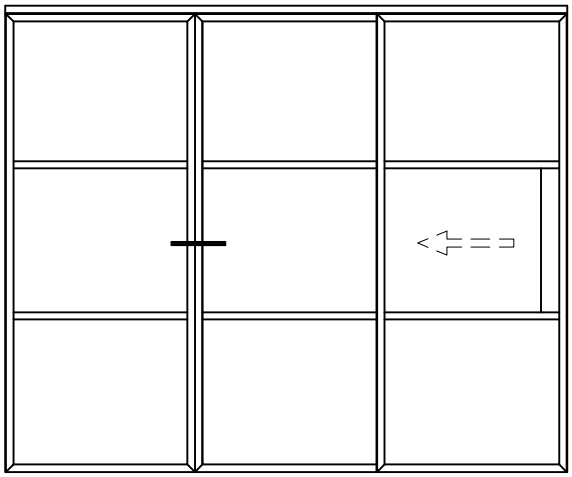

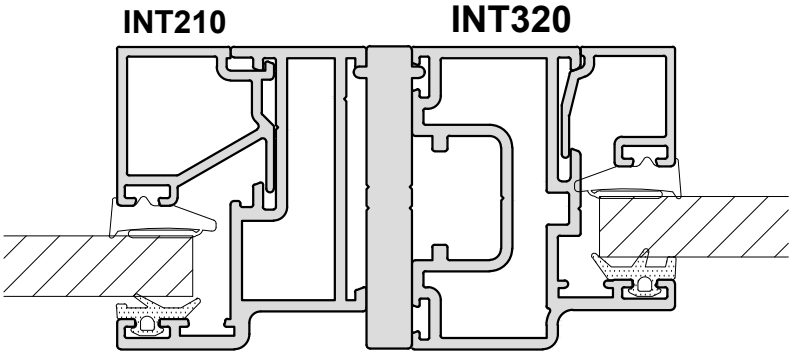

Ixx = 26.29 cm^4

Do Not Scale From This Drawing

Section D

PROFILE COMBINATIONS - IX - VERTICAL COUPLER : STATICS

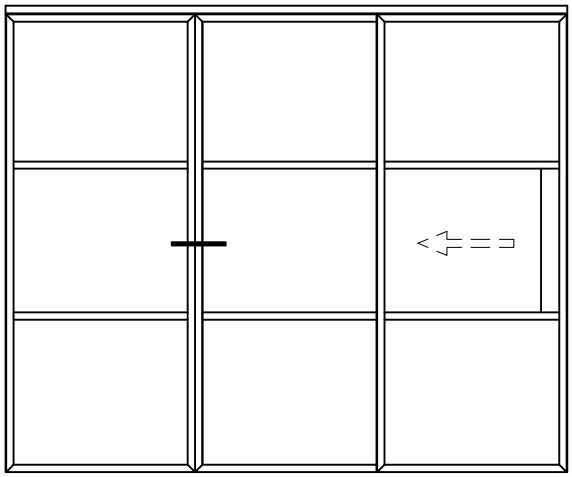

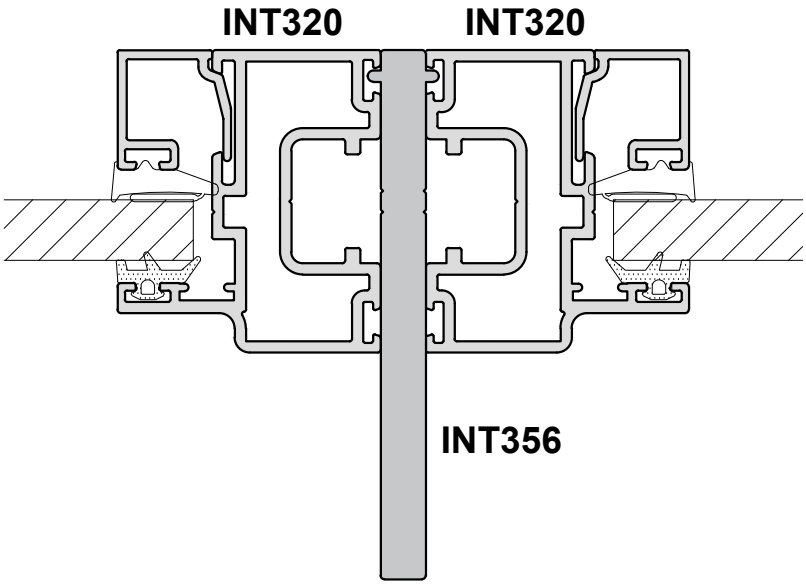

Ixx = 26.93 cm^4

Do Not Scale From This Drawing

Section E

E INT

Construction Drawings

ISSUED: March 2025

Corner Joint Details

Notes

1. Degrease mitre sections
2. Cover mitred faces with ACSIL04
3. Apply ACSIL013 to cleat chamber

Important fabrication note:

Transoms MUST be fitted prior to crimping the corners.

Table 1

KL Colour	Sealant Part Number
Black	ACSIL04BL
White	ACSIL04WP
Clear	ACSIL04CL
KL001	ACSIL04KL001
KL002	ACSIL04KL002
KL003	ACSIL04KL003
KL004	ACSIL04KL004
KL005	ACSIL04KL005
KL006	ACSIL04KL006
KL007	ACSIL04KL007
KL010	ACSIL04KL010
KL011	ACSIL04KL011
KL012	ACSIL04KL012
KL013	ACSIL04KL013

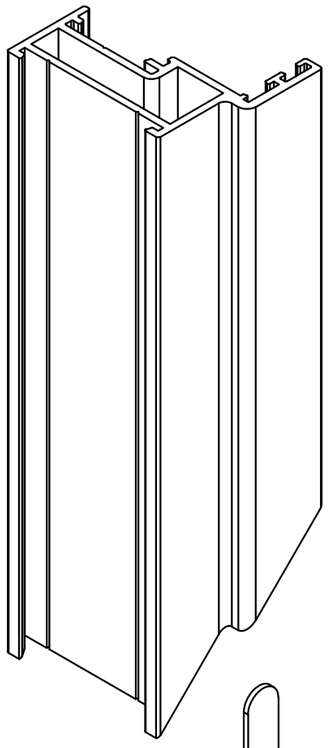

Corner Chevron

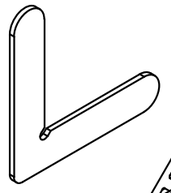

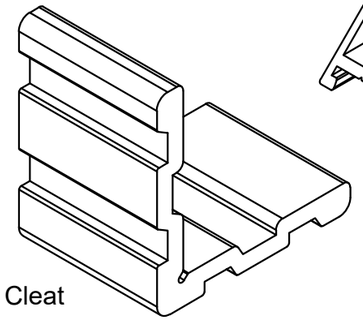

Corner Cleat

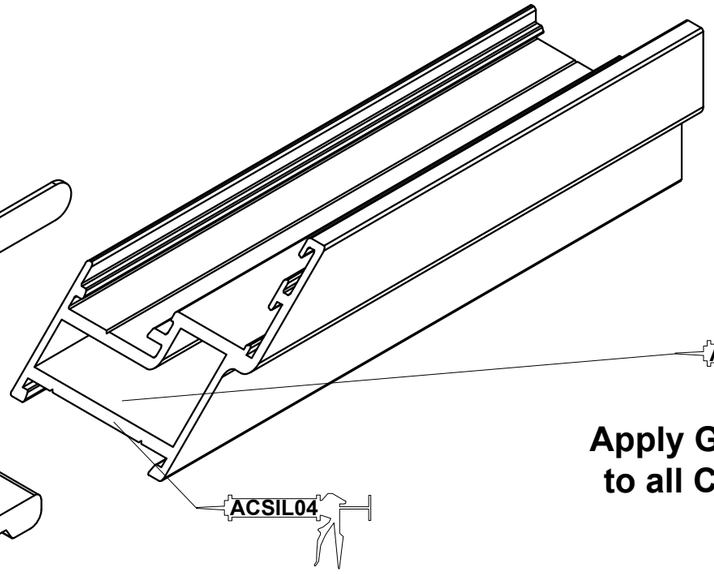

Apply Glue (ACSIL013) to all Cleat Apertures

Coat Cut Face of Profile with ACSIL04 Prior to Crimping (available in KL colours - see Table 1)

Do Not Scale From This Drawing

Crimping Details

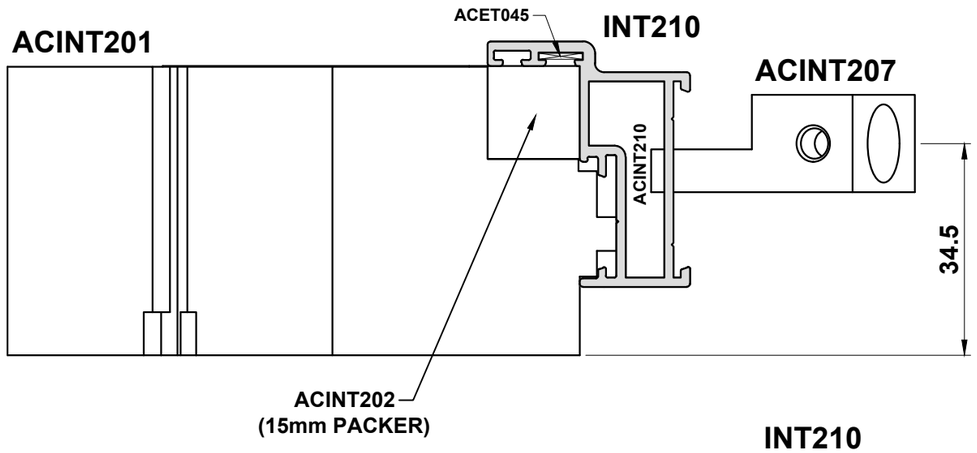

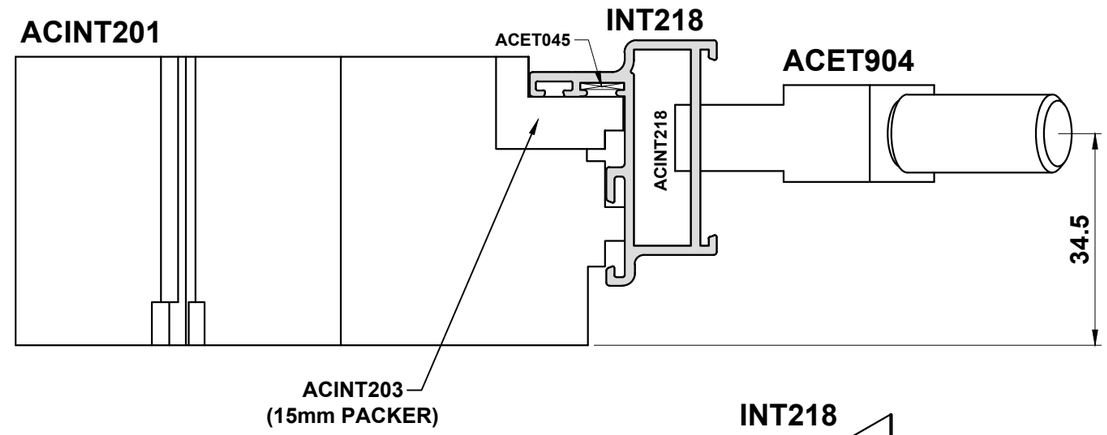

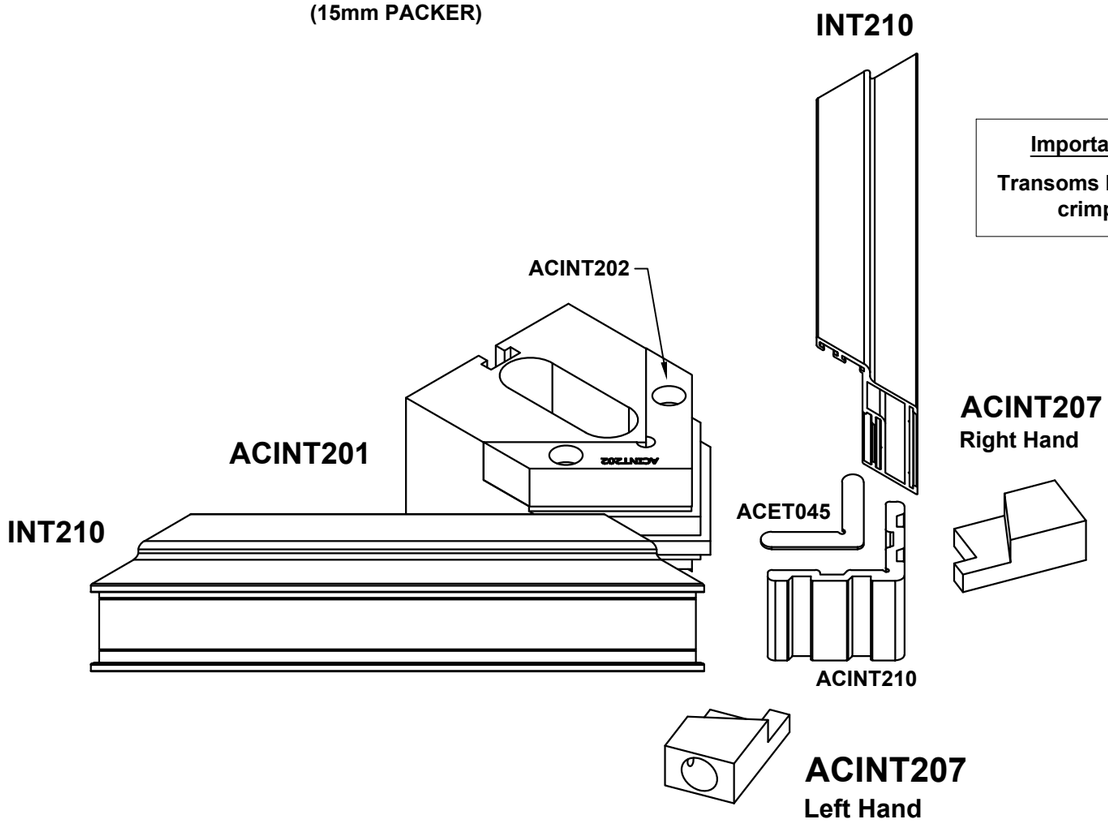

Important fabrication note:

Transoms MUST be fitted prior to crimping the corners.

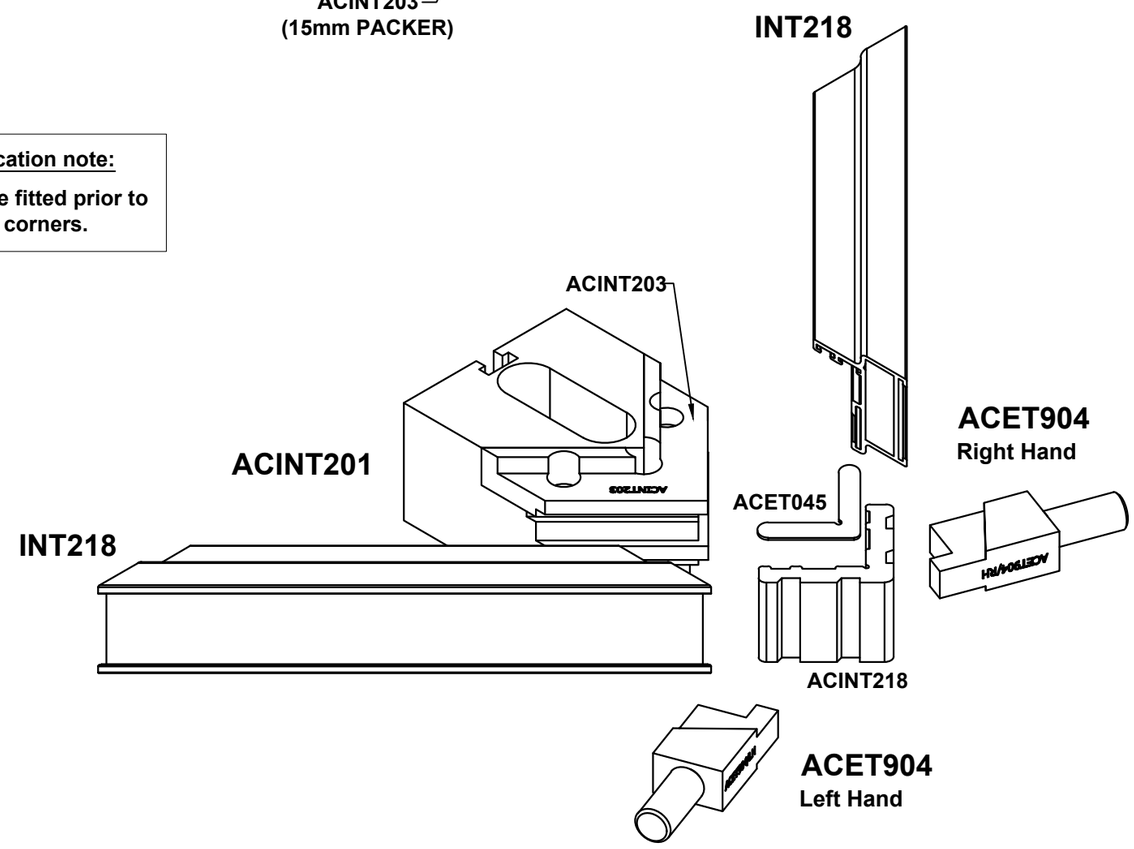

Do Not Scale From This Drawing

Crimping Details

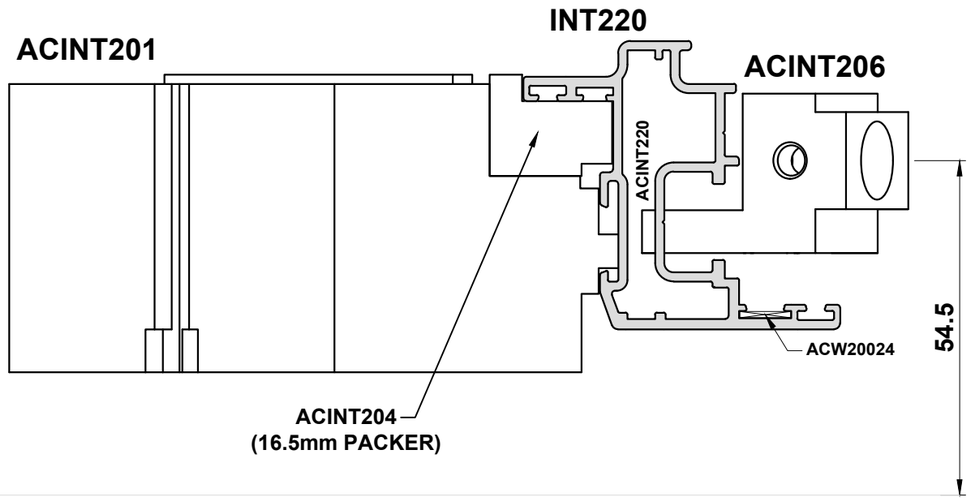

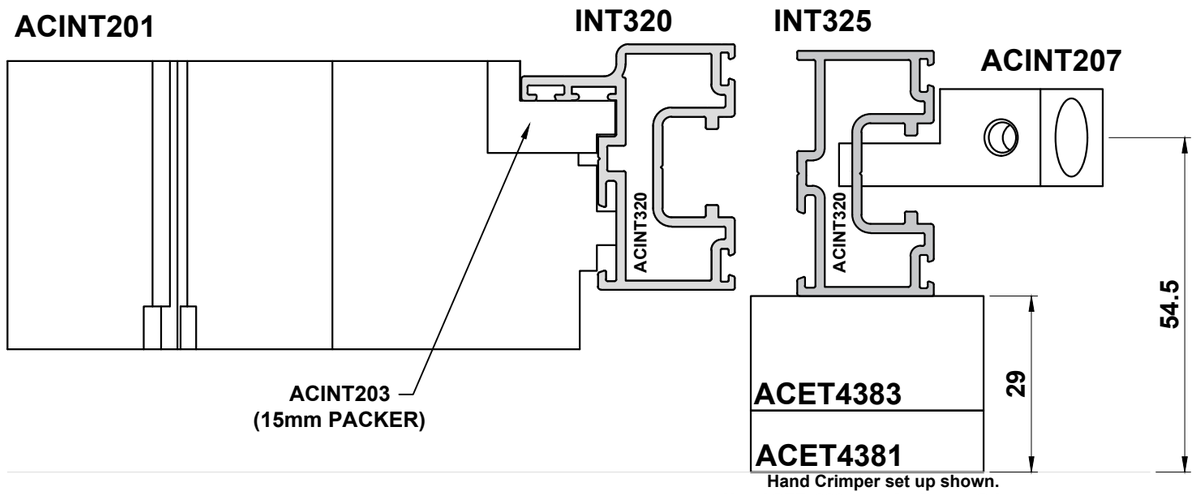

Hand Crimper set up shown.
Use ACET4380 base for Power Crimper

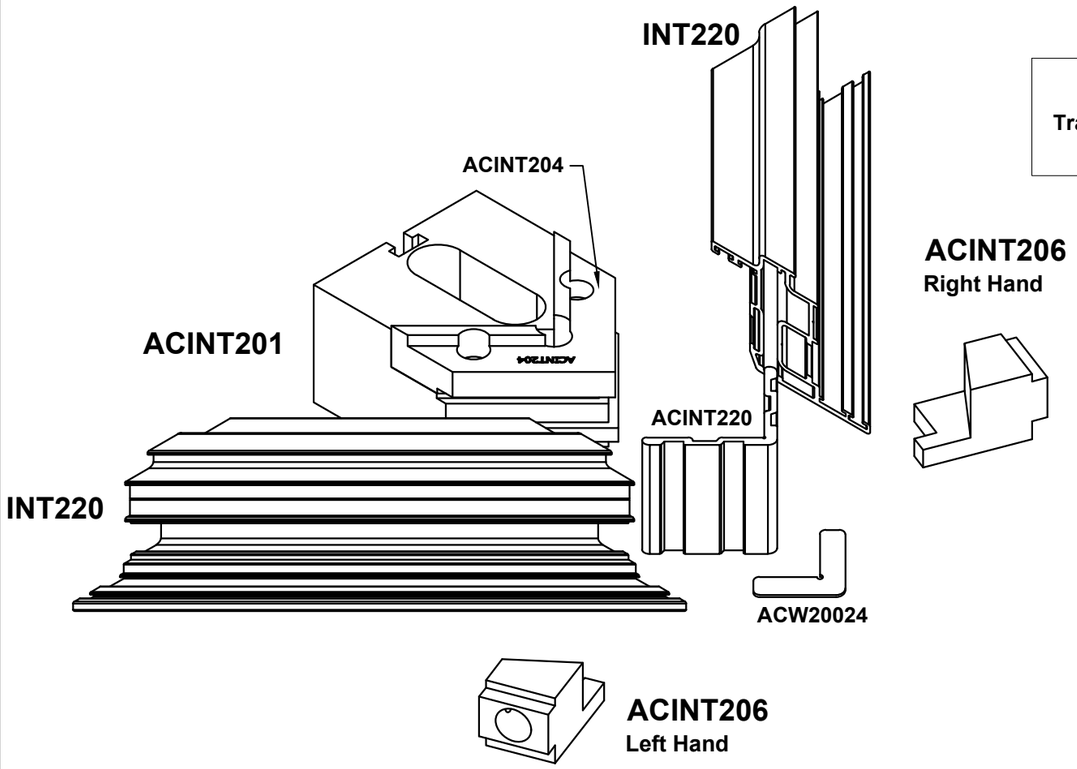

Important fabrication note:

Transoms MUST be fitted prior to crimping the corners.

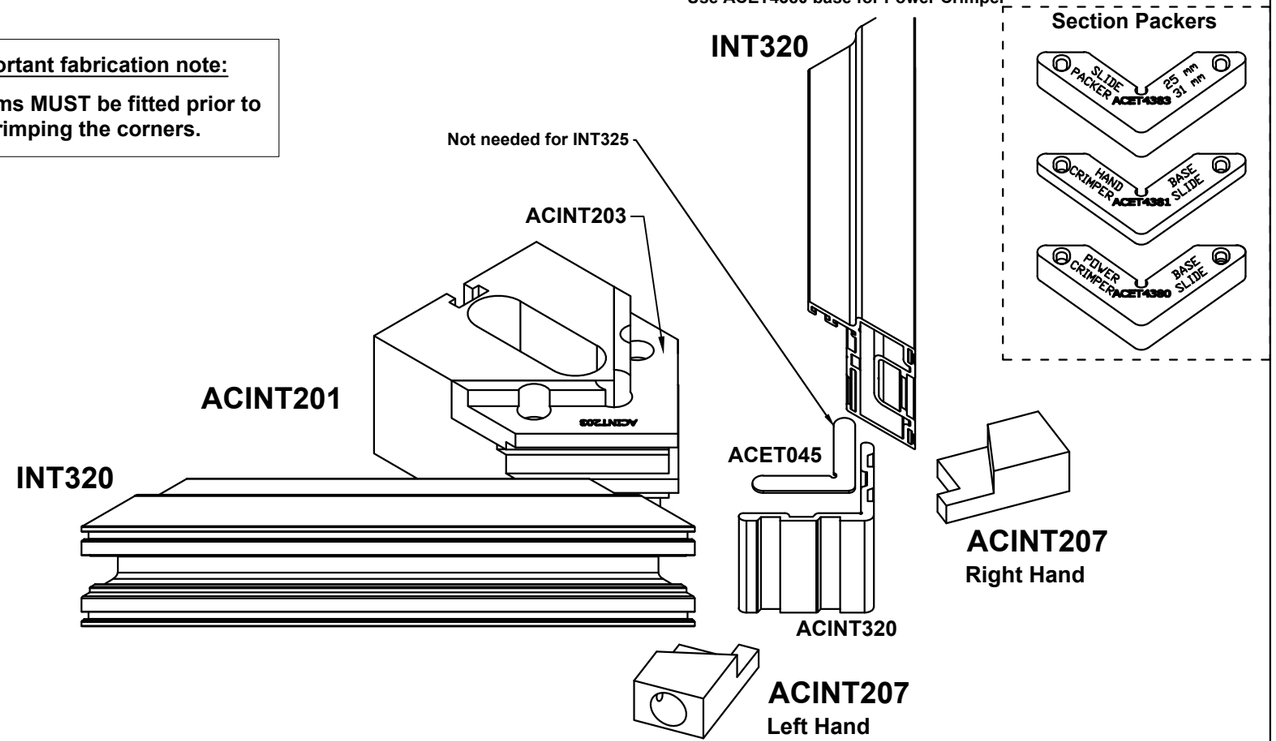

Do Not Scale From This Drawing

Transom Detail

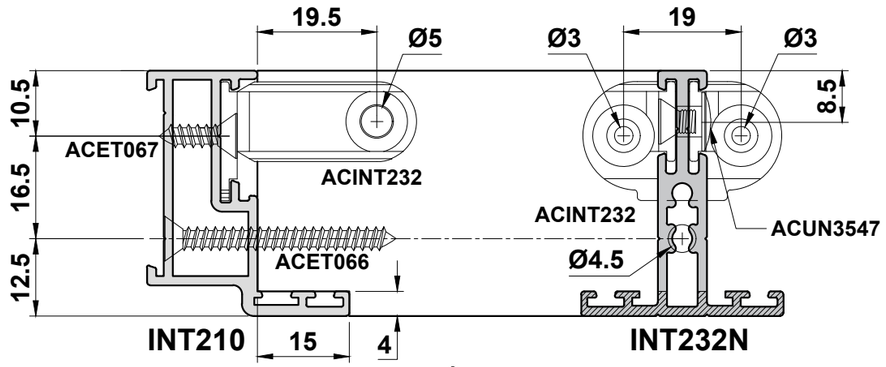

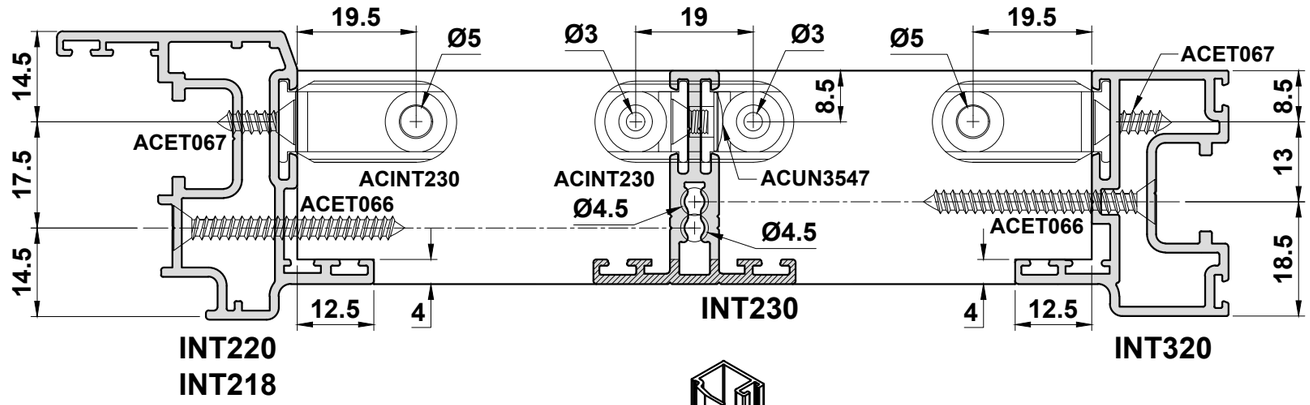

*** Important fabrication note:**

Additional countersinking may be required for transom brackets due to build up of tolerances.

Important fabrication note:

Transoms MUST be fitted prior to crimping the corners.

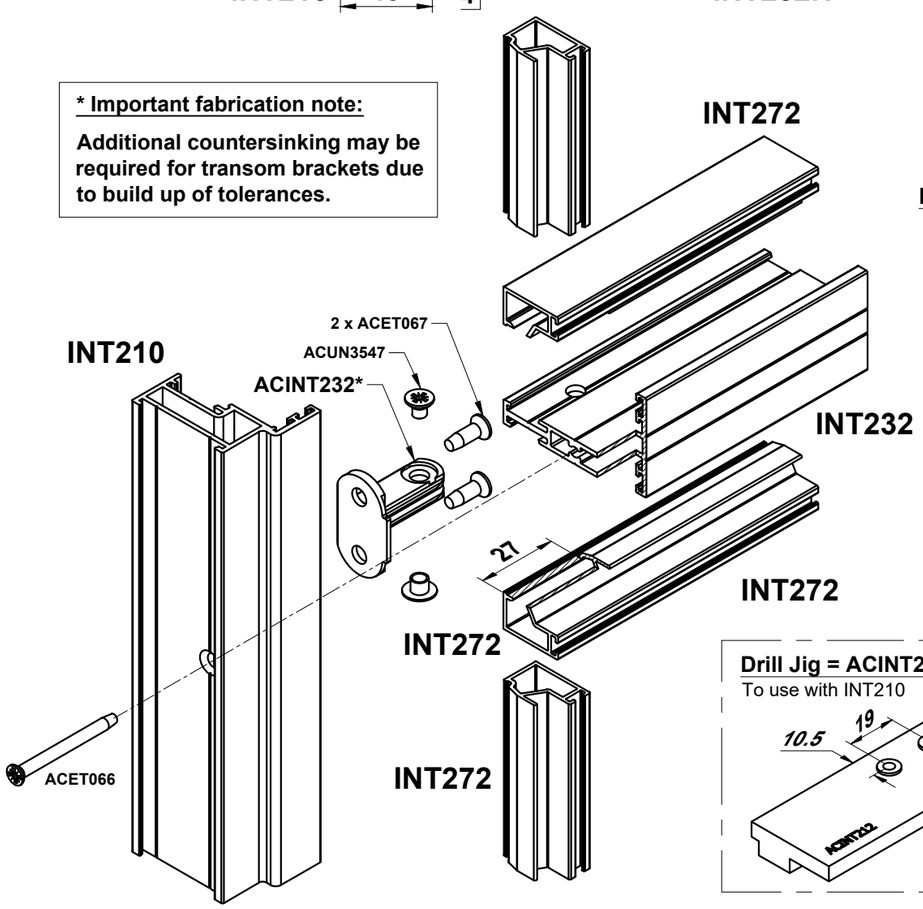

INT272 End Mill Detail

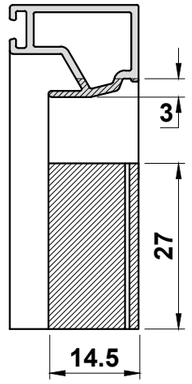

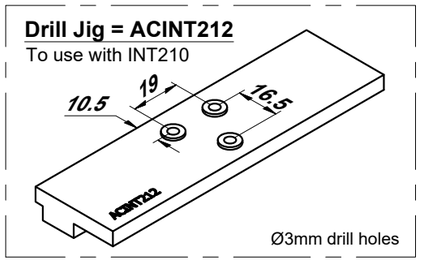

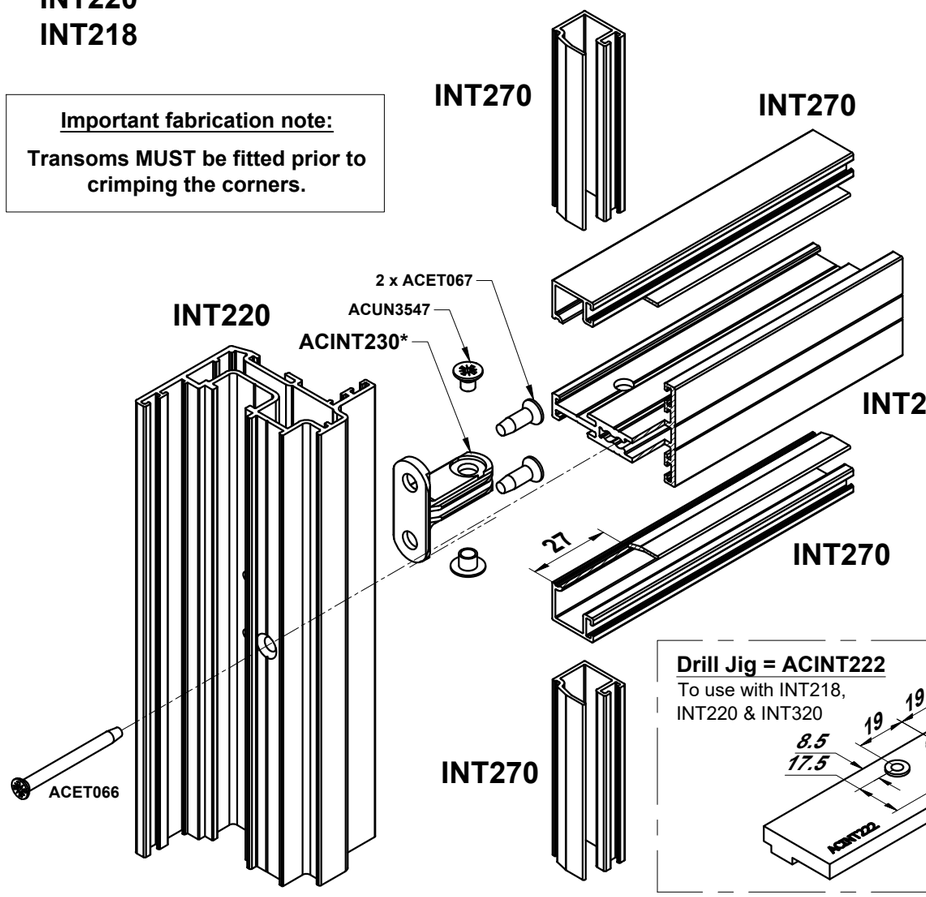

INT270 End Mill Detail

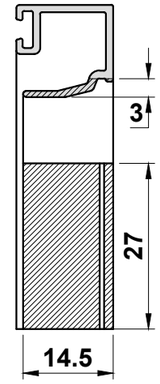

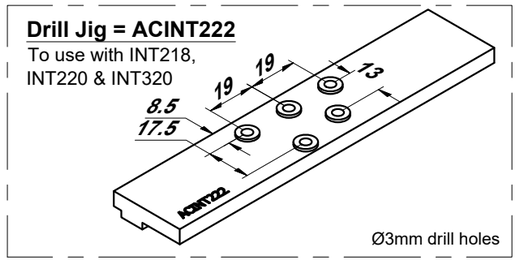

Do Not Scale From This Drawing

Sash / Transom - Transom Detail

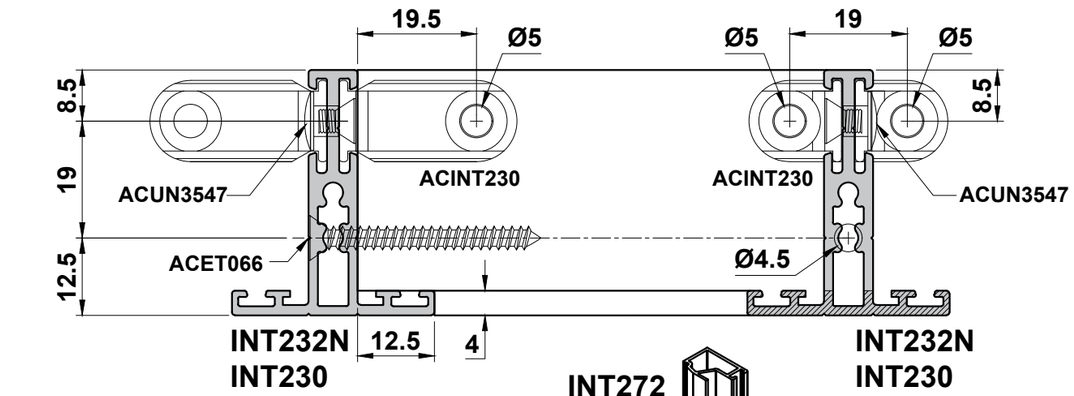

*** Important fabrication note:**

Additional countersinking may be required for transom brackets due to build up of tolerances.

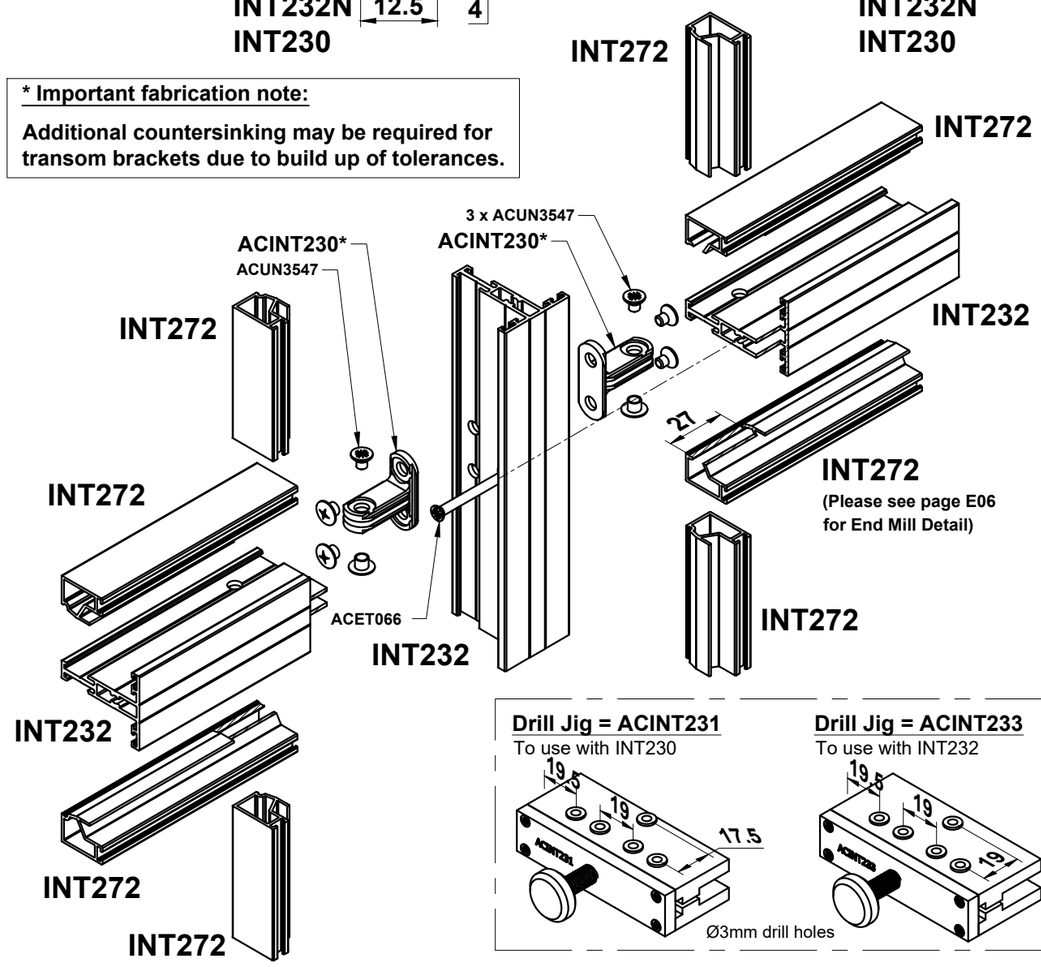

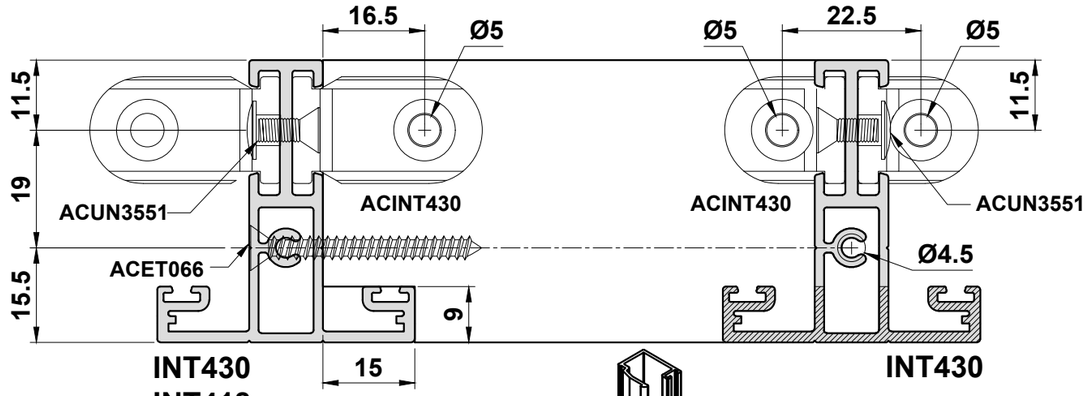

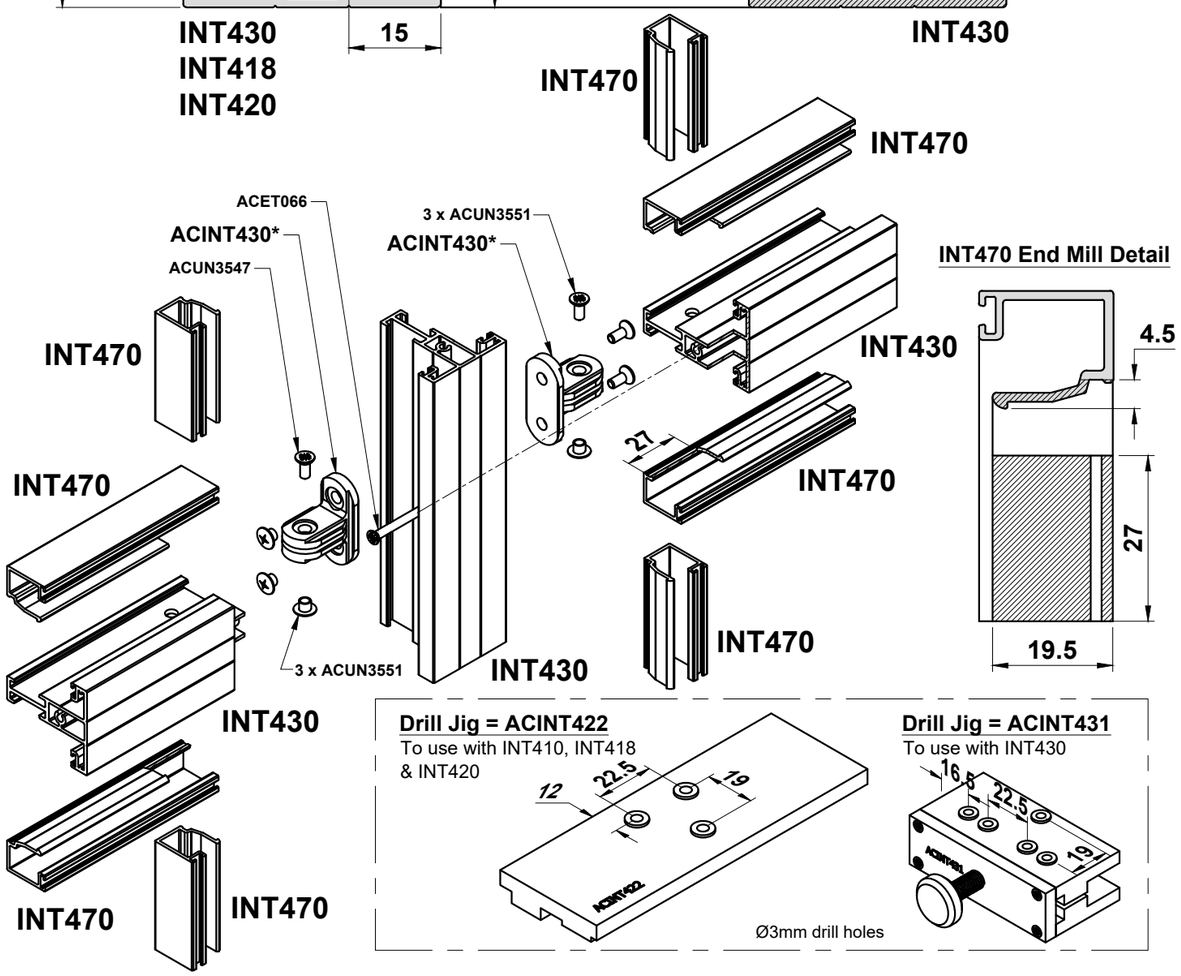

Do Not Scale From This Drawing

Deep Bottom Rail Detail

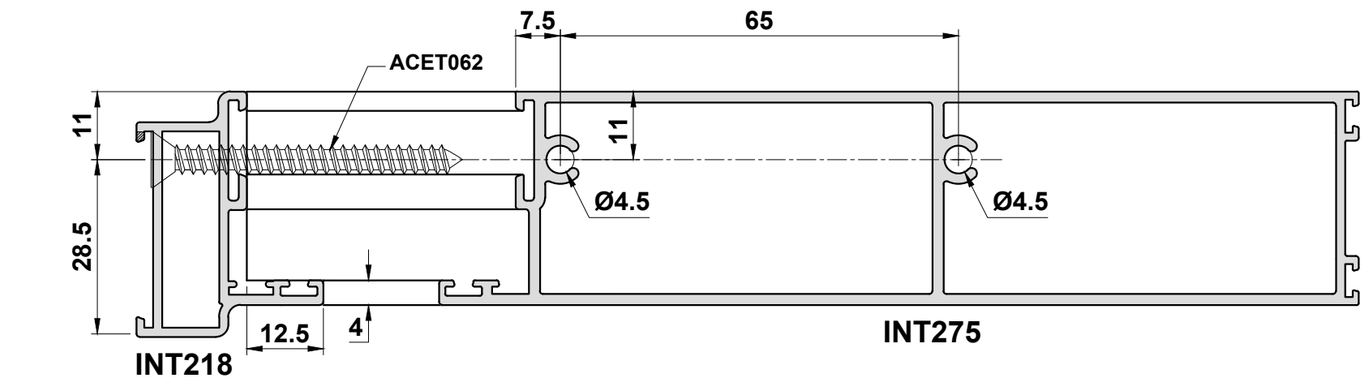

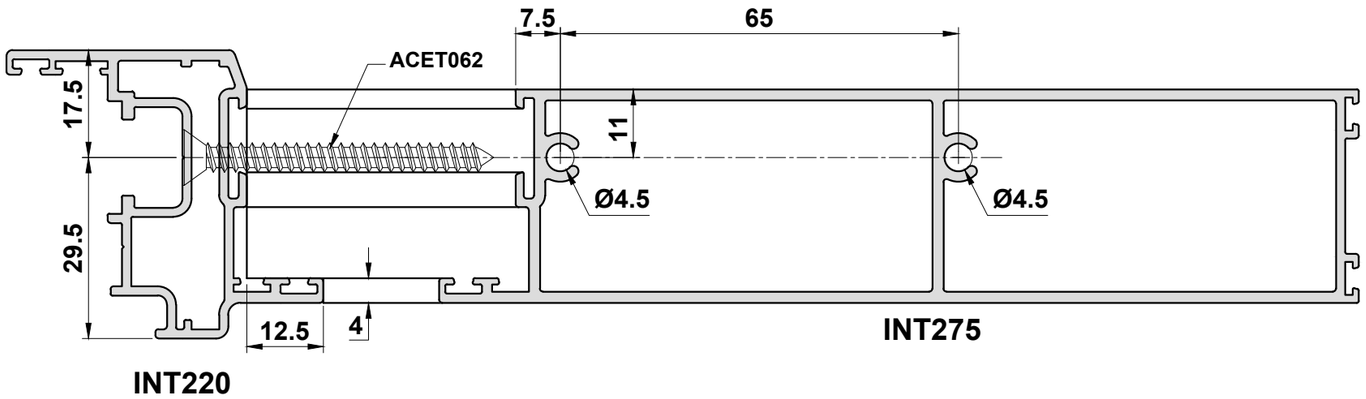

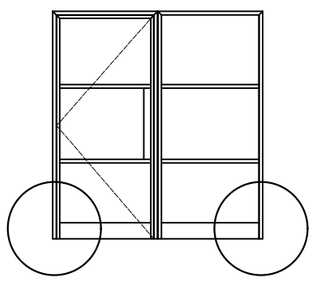

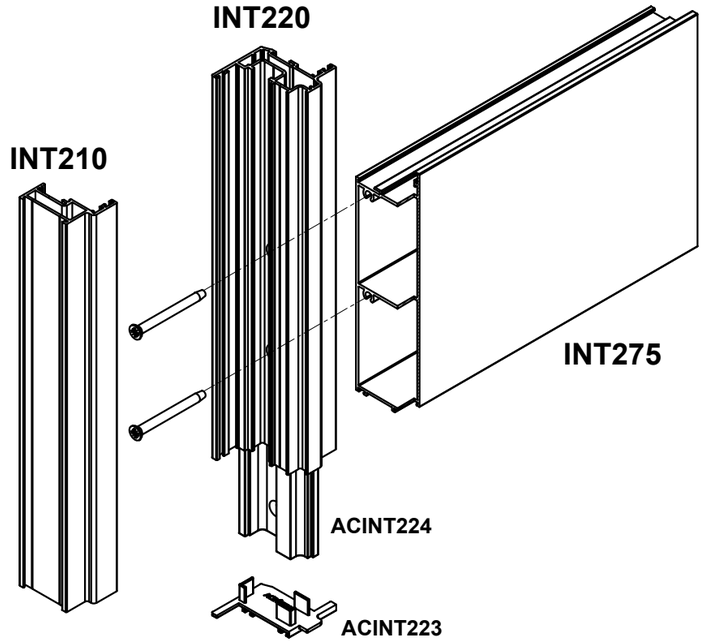

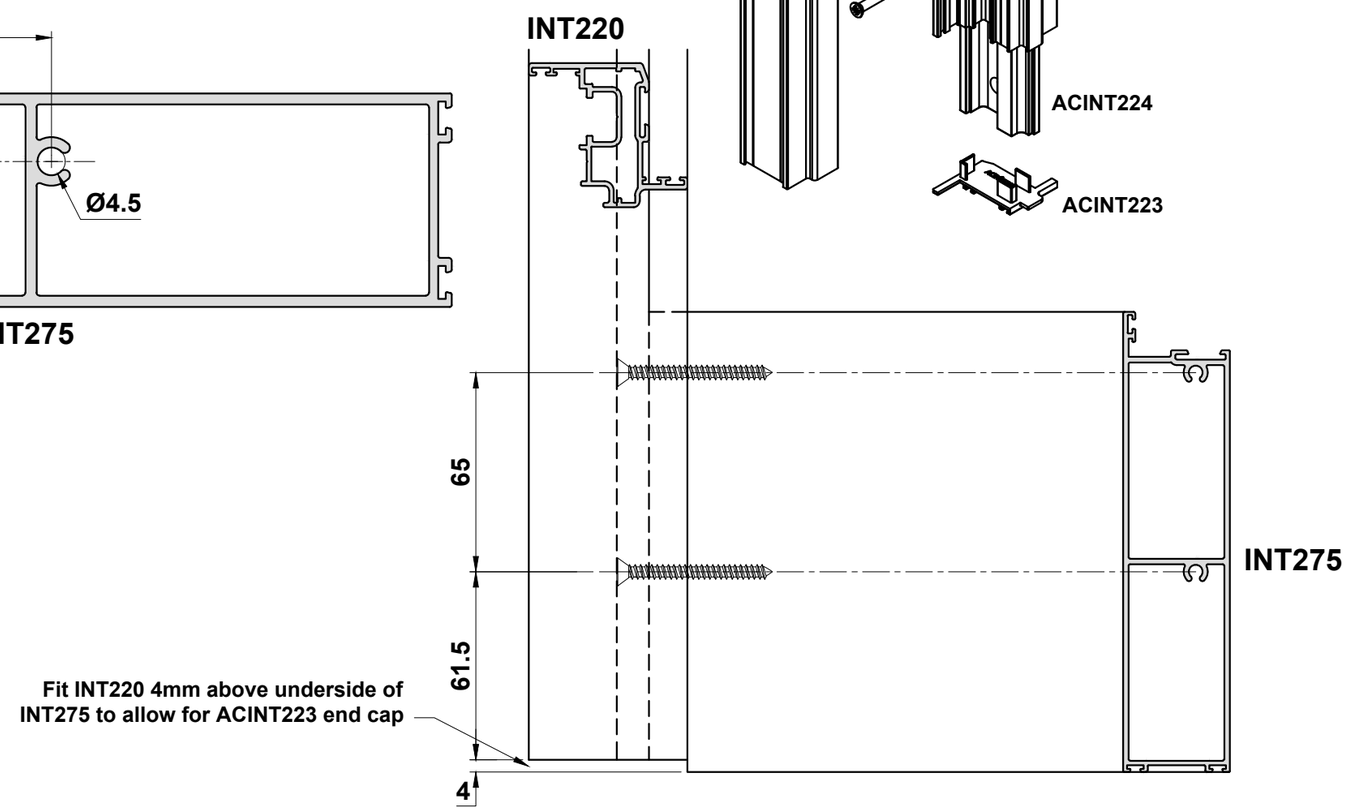

Do Not Scale From This Drawing

Hinged Door Lock Preparation

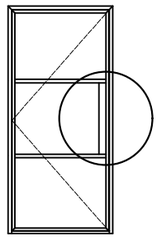

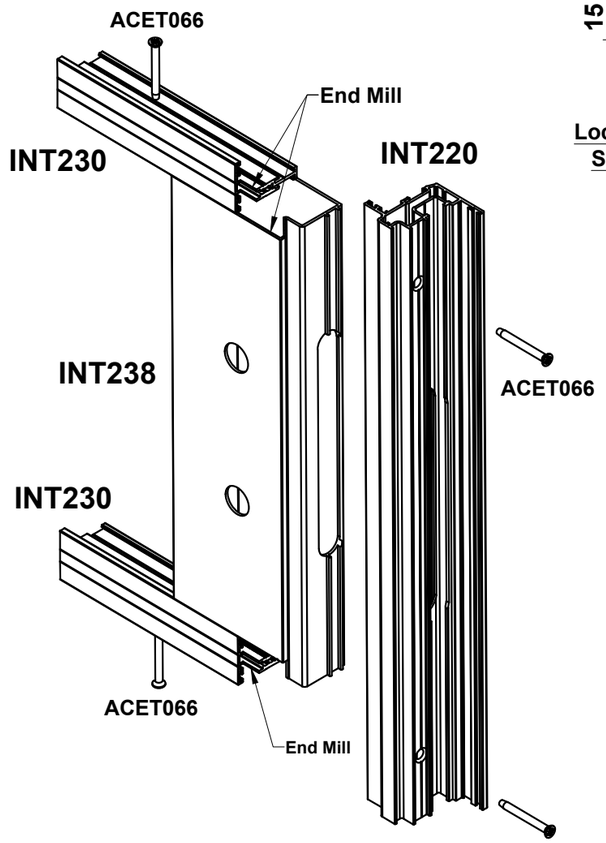

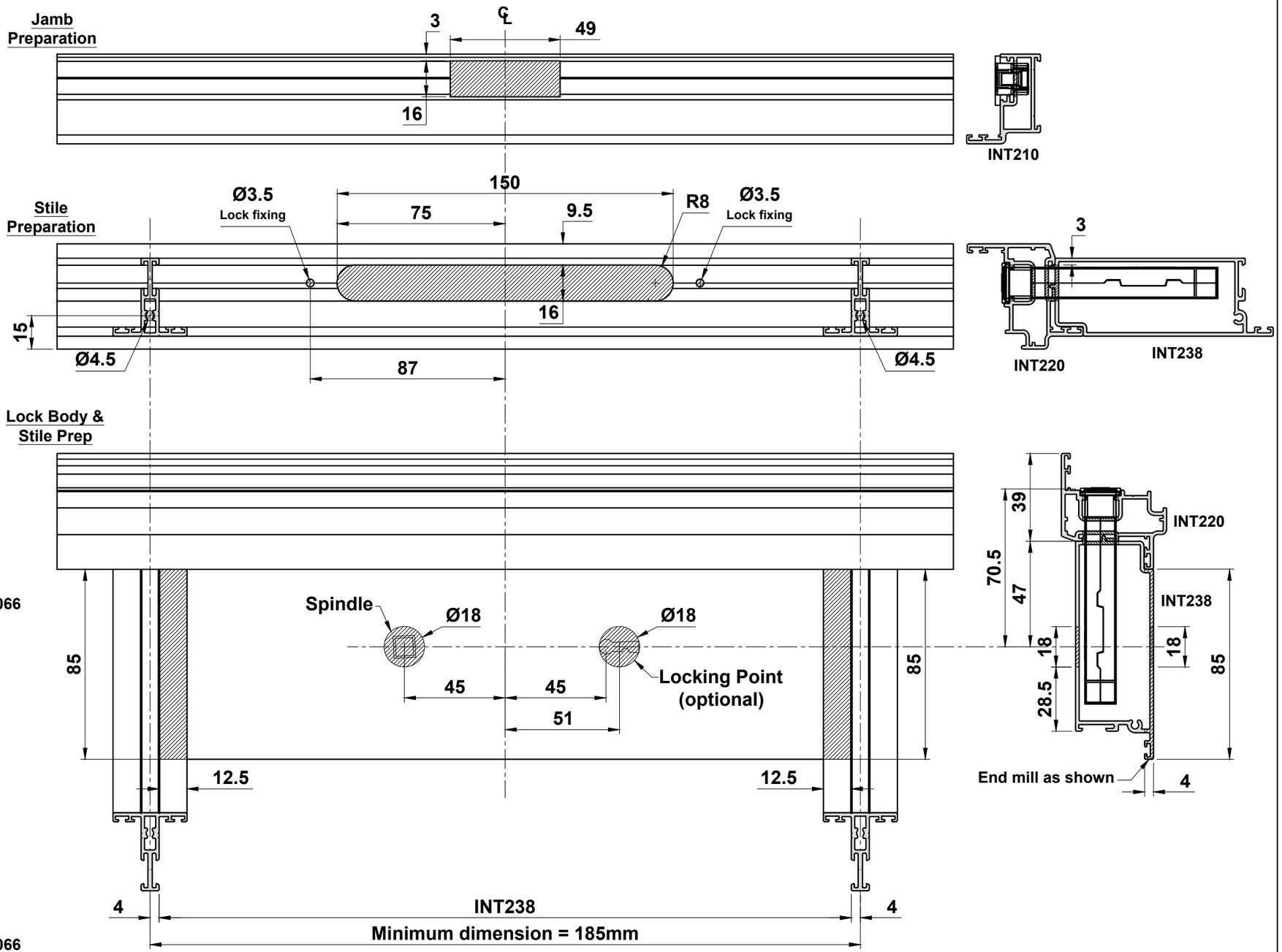

See page E06 for transoms/ sash joint details

Do Not Scale From This Drawing

ACINT235 Single-point Lock Installation

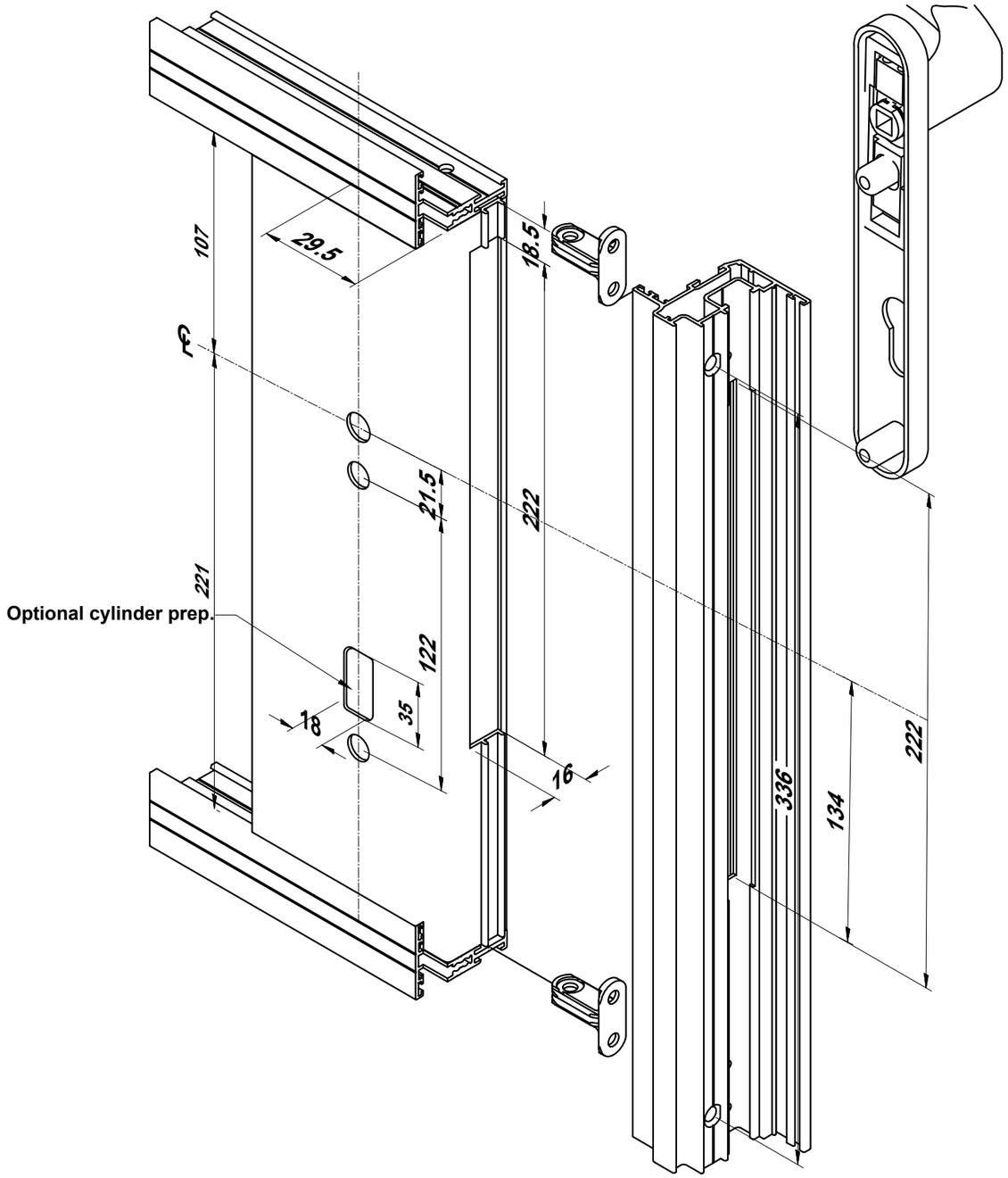

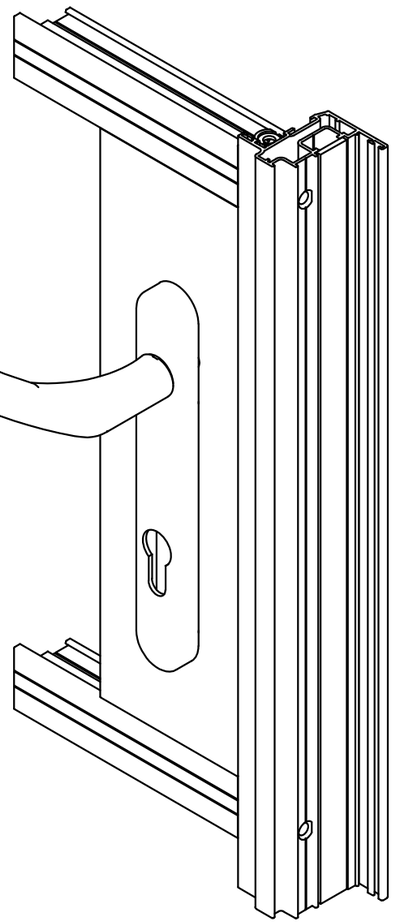

Centre Keep Machining

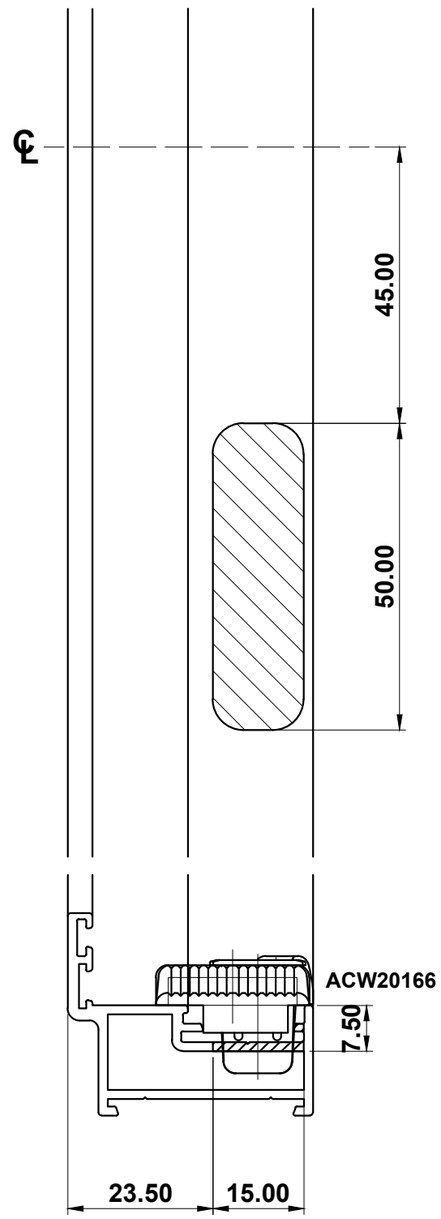

Do Not Scale From This Drawing

Pivot Door Lock Preparation

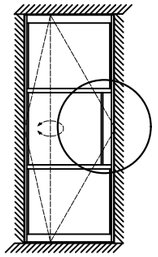

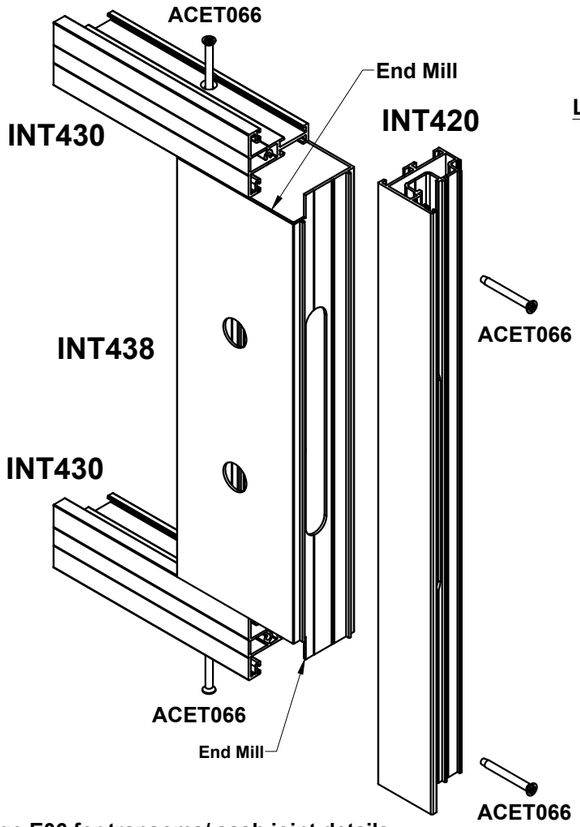

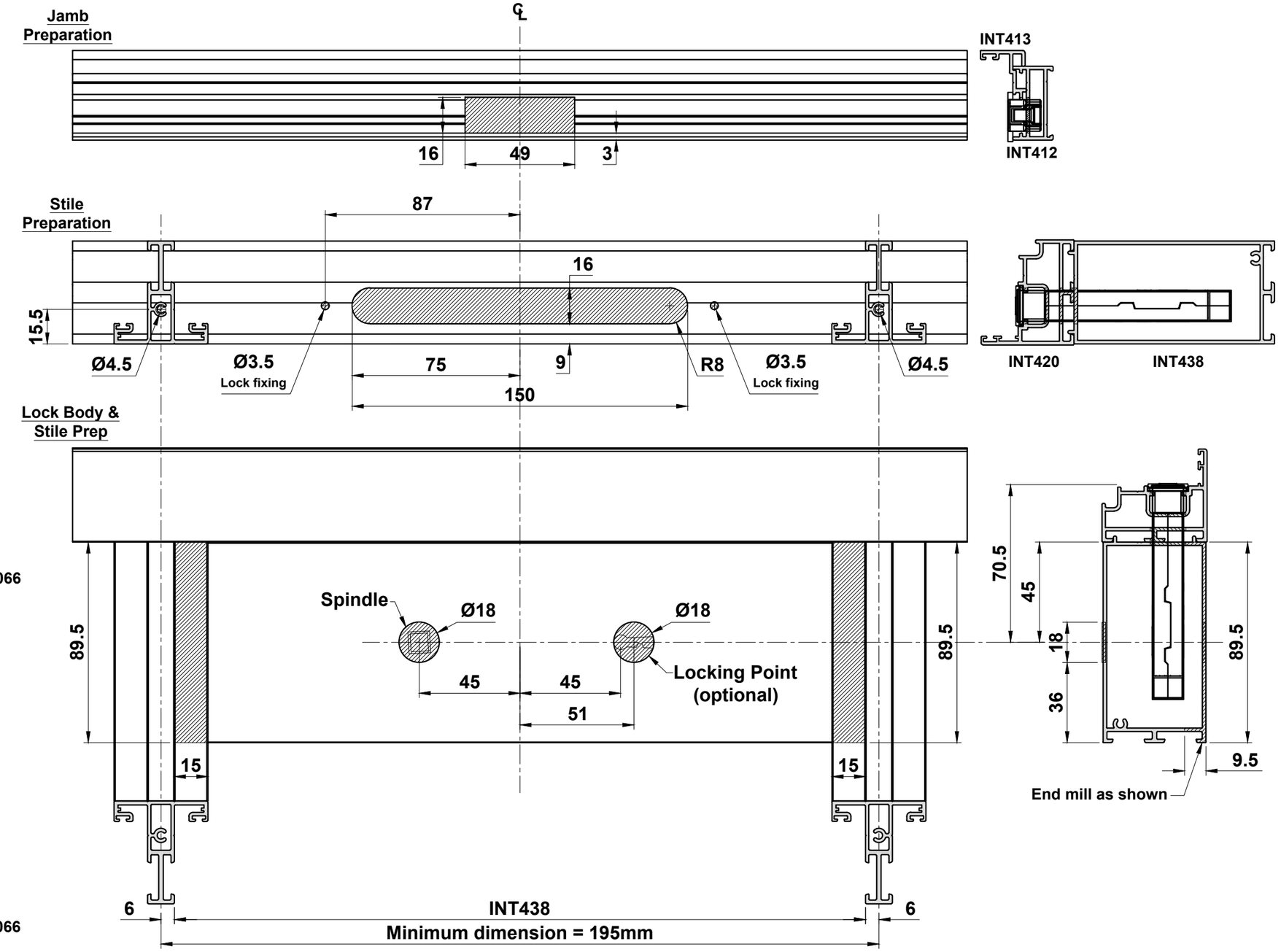

See page E06 for transoms/ sash joint details

Do Not Scale From This Drawing

Open In Door Hinge Details

Recommended hinge positions

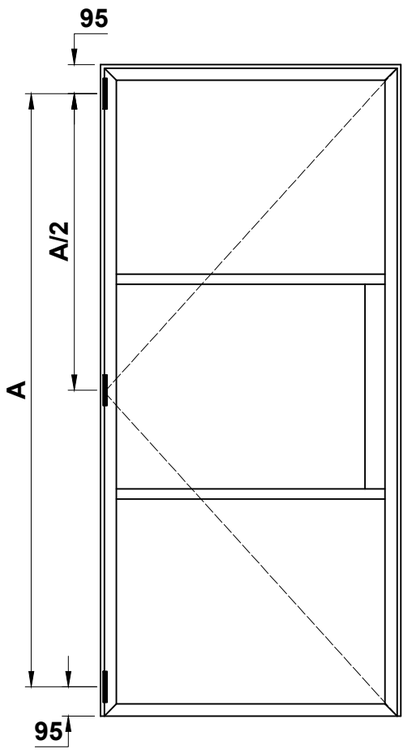

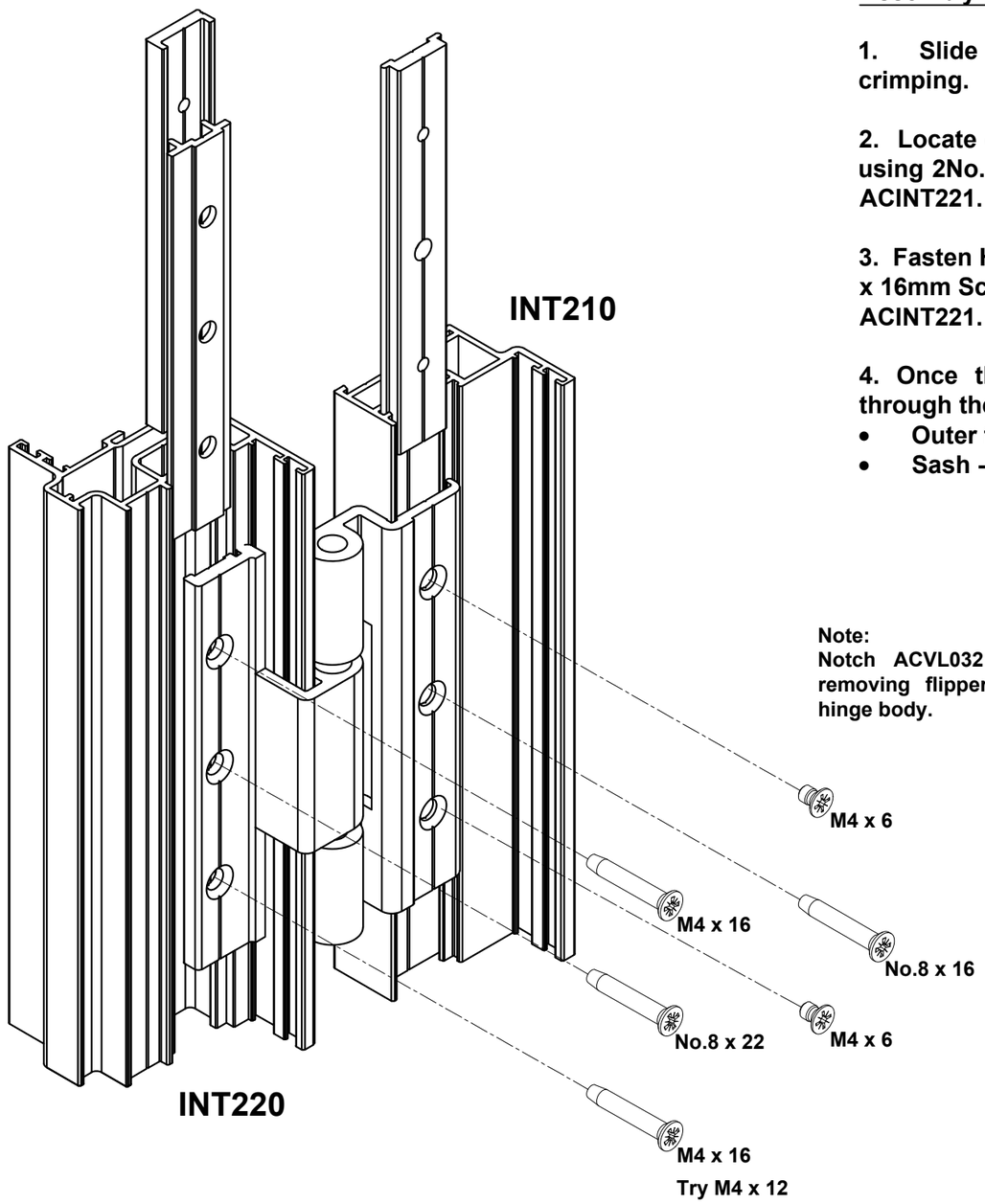

Assembly Instructions

1. Slide Hinge Backplates into outerframe prior to crimping.

2. Locate each hinge in outerframe and clamp in position using 2No. M4 x 6mm Countersunk screws - supplied with ACINT221.

3. Fasten Hinge to Sash through the adaptor with 2No. M4 x 16mm Screws into the clamp plate - supplied with ACINT221.

4. Once the hinge requires no further adjustment, fix through the centre holes with:
- Outer frame - 1 x No.8 x 16mm Csk Self Tapping screw
- Sash - 1 x No.8 x 22mm Csk Self Tapping screw

Note:
Notch ACVL032 Gasket removing flipper behind hinge body.

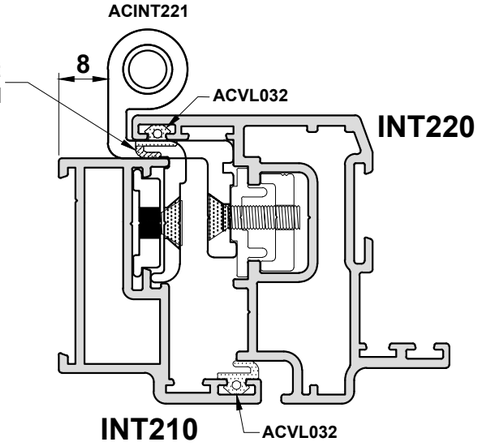

Do Not Scale From This Drawing

Open In Double Door - Bottom Detail

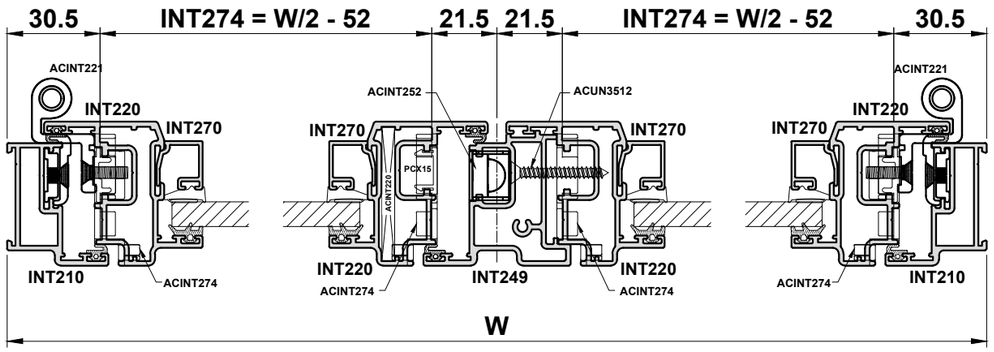

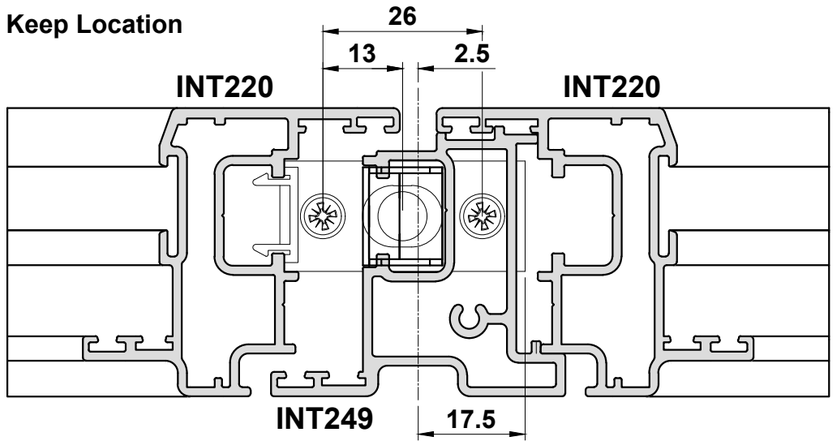

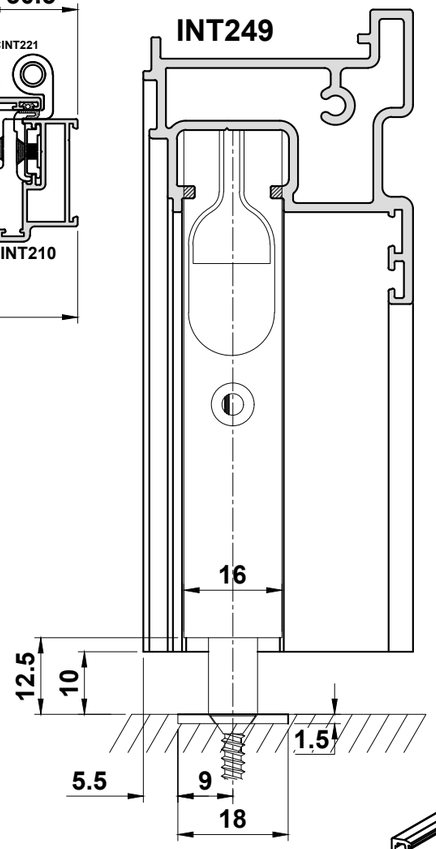

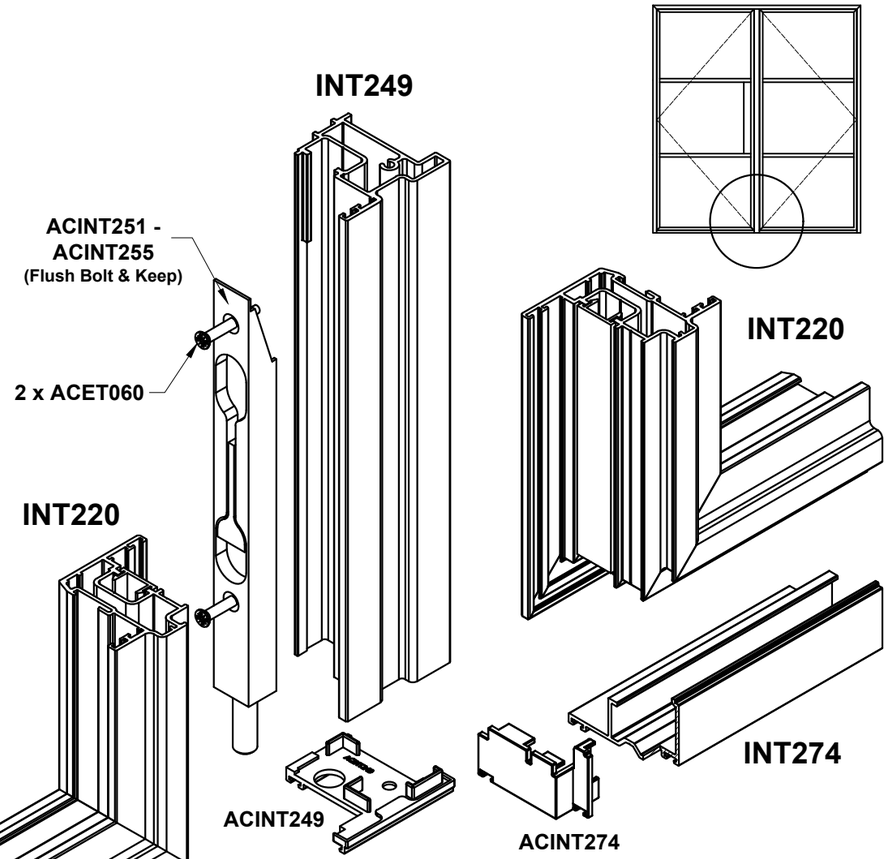

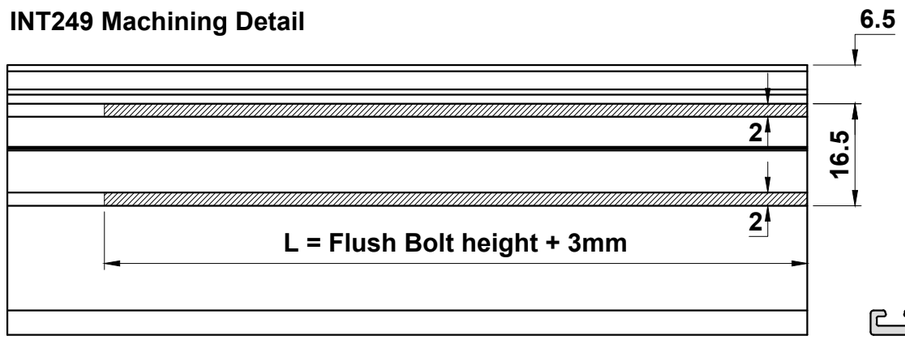

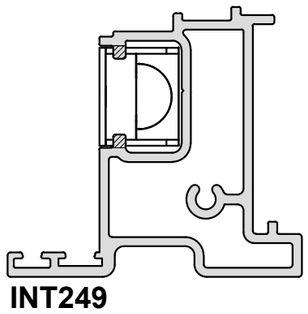

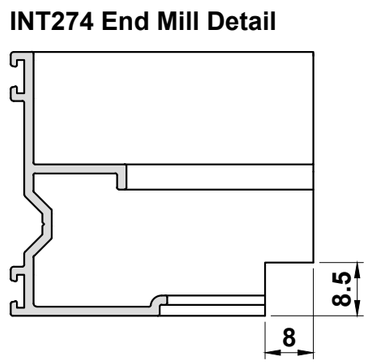

Do Not Scale From This Drawing

Open In Double Door - Top Detail

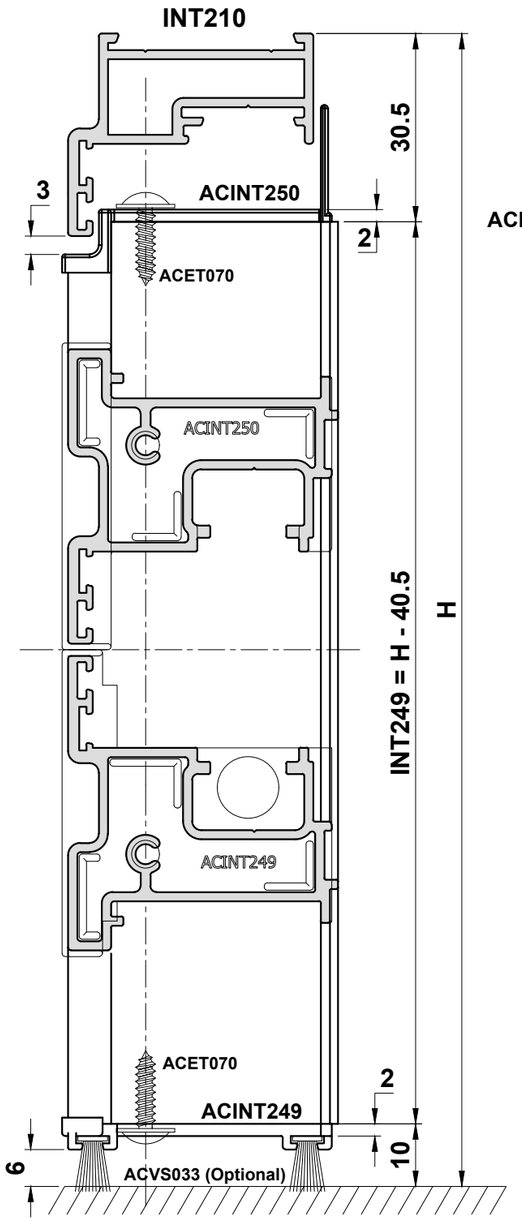

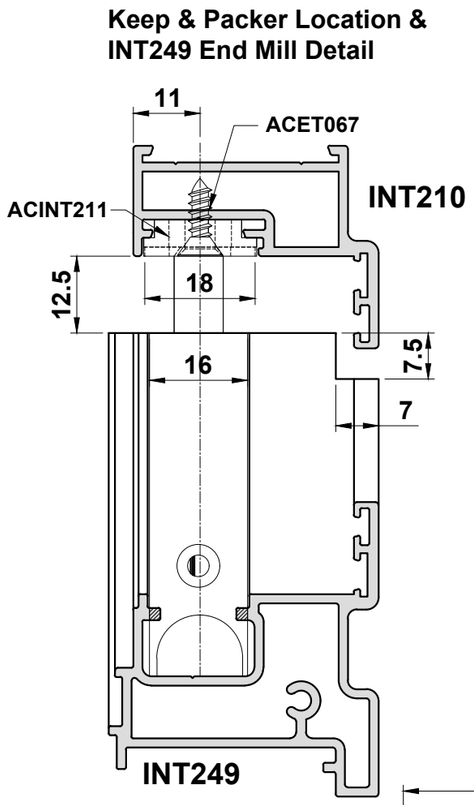

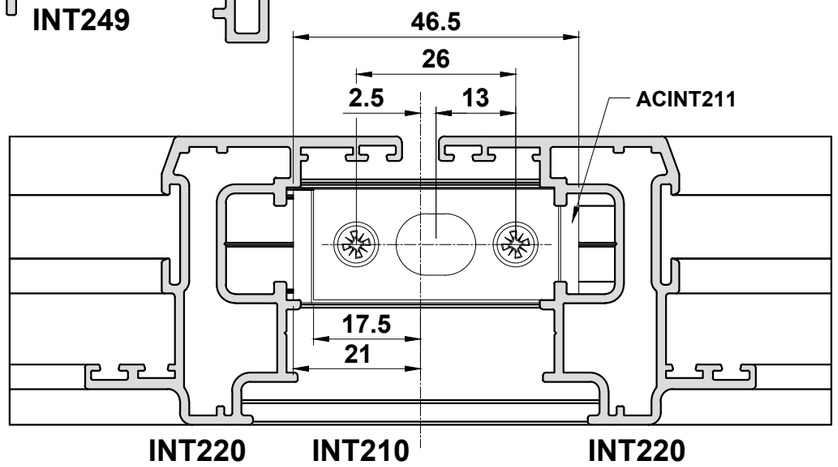

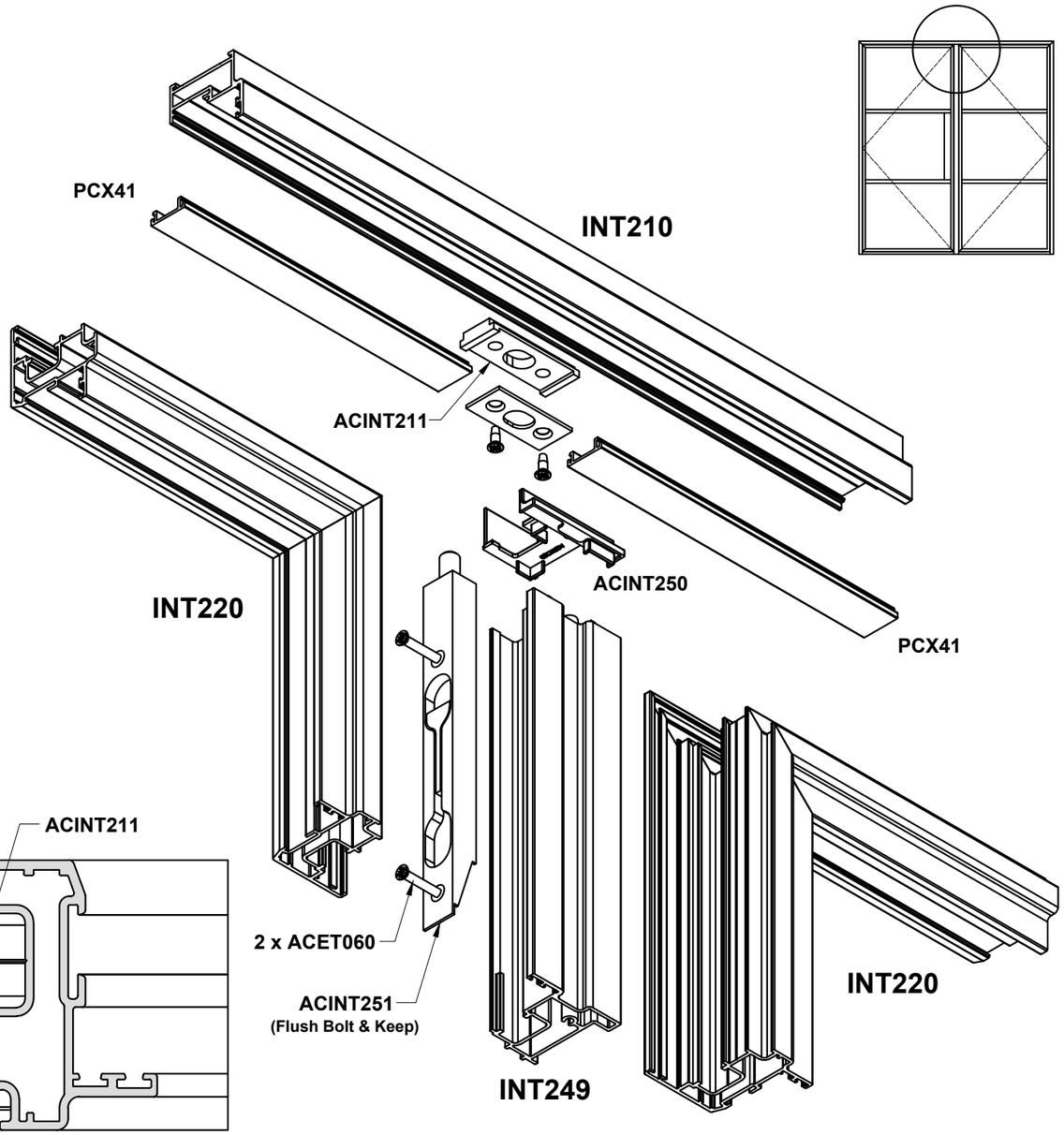

Do Not Scale From This Drawing

Sliding Door - Roller Fixing

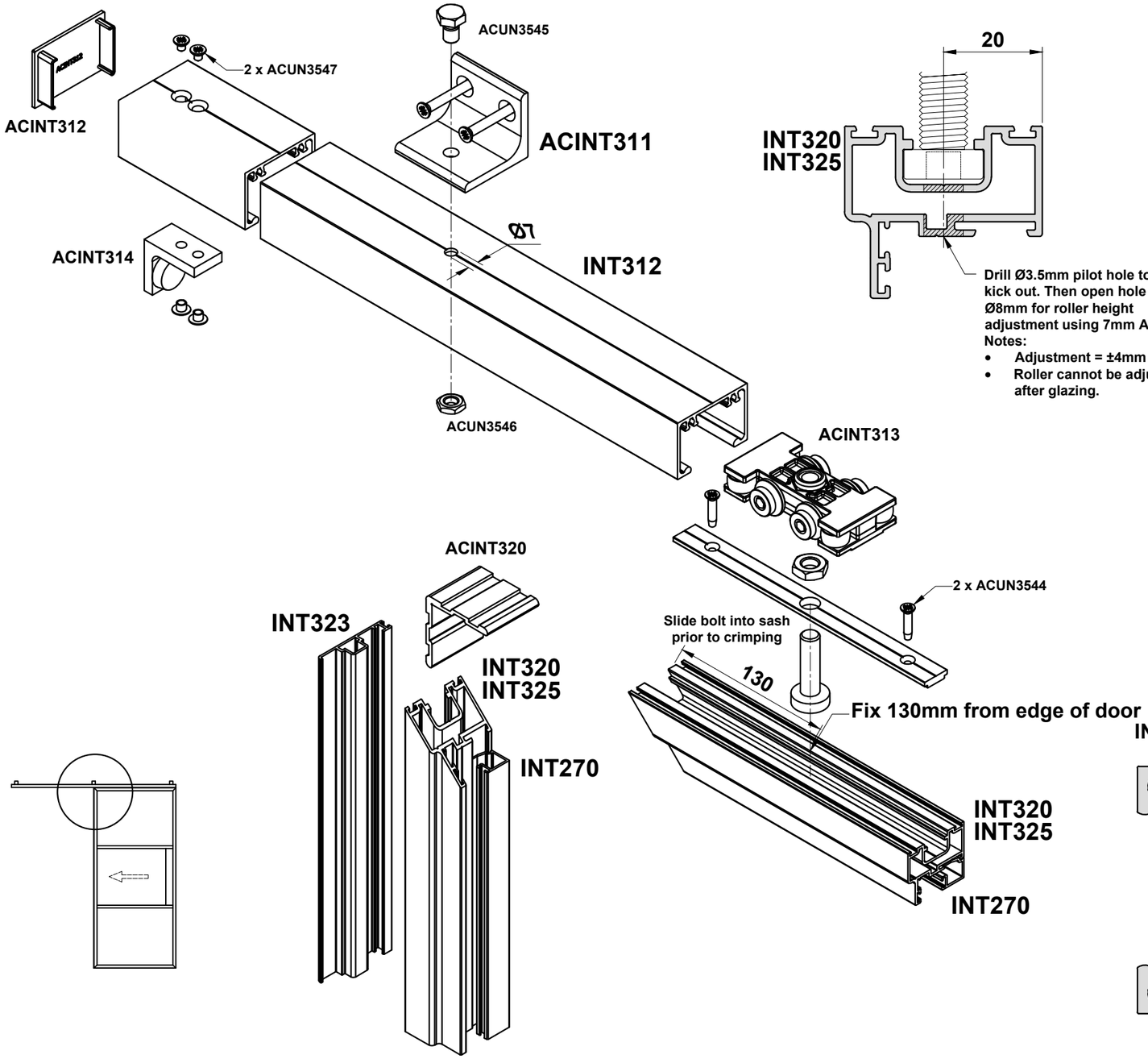

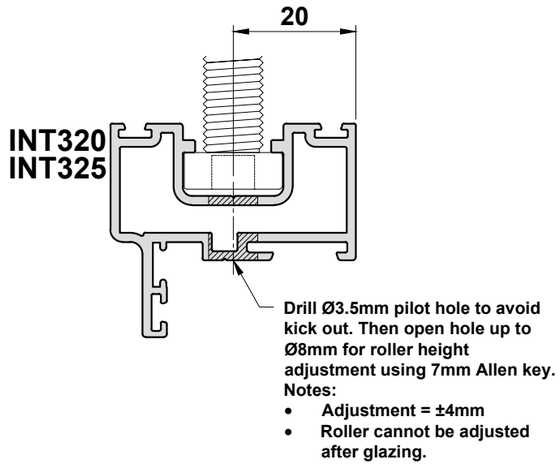

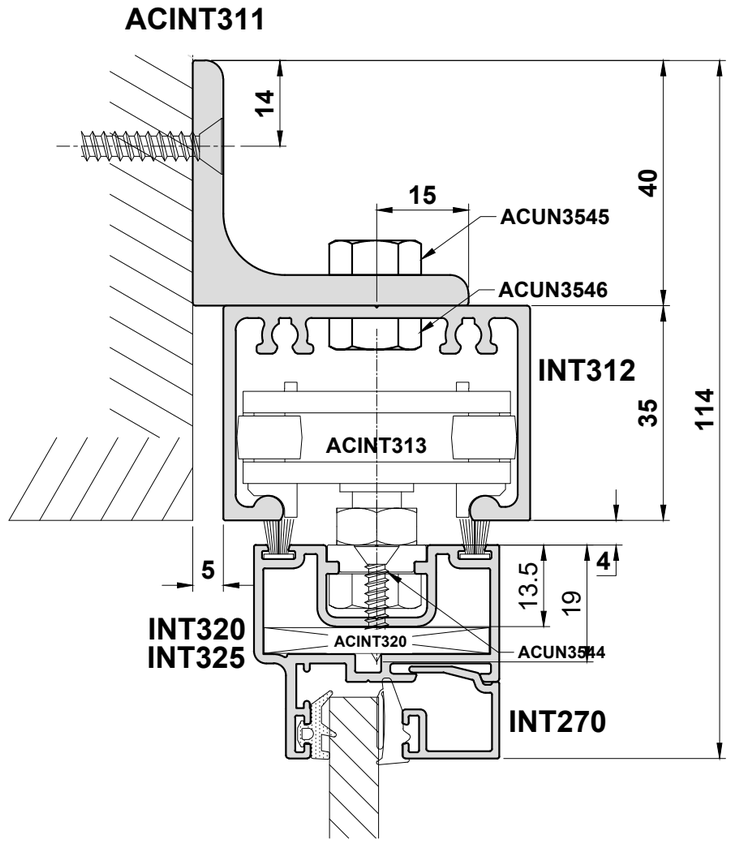

INT312 Preparation

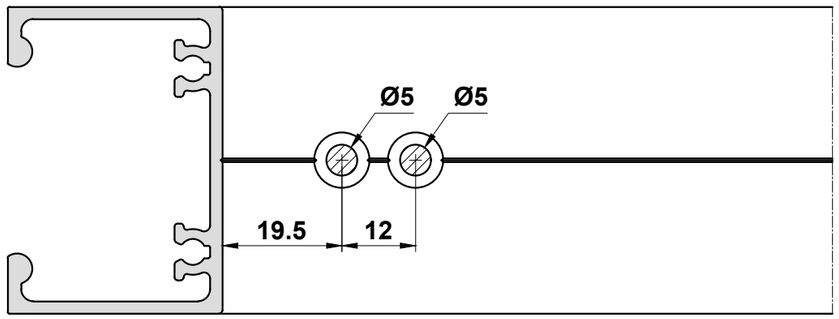

Do Not Scale From This Drawing

Sliding Door - Position of door stop ACINT 314

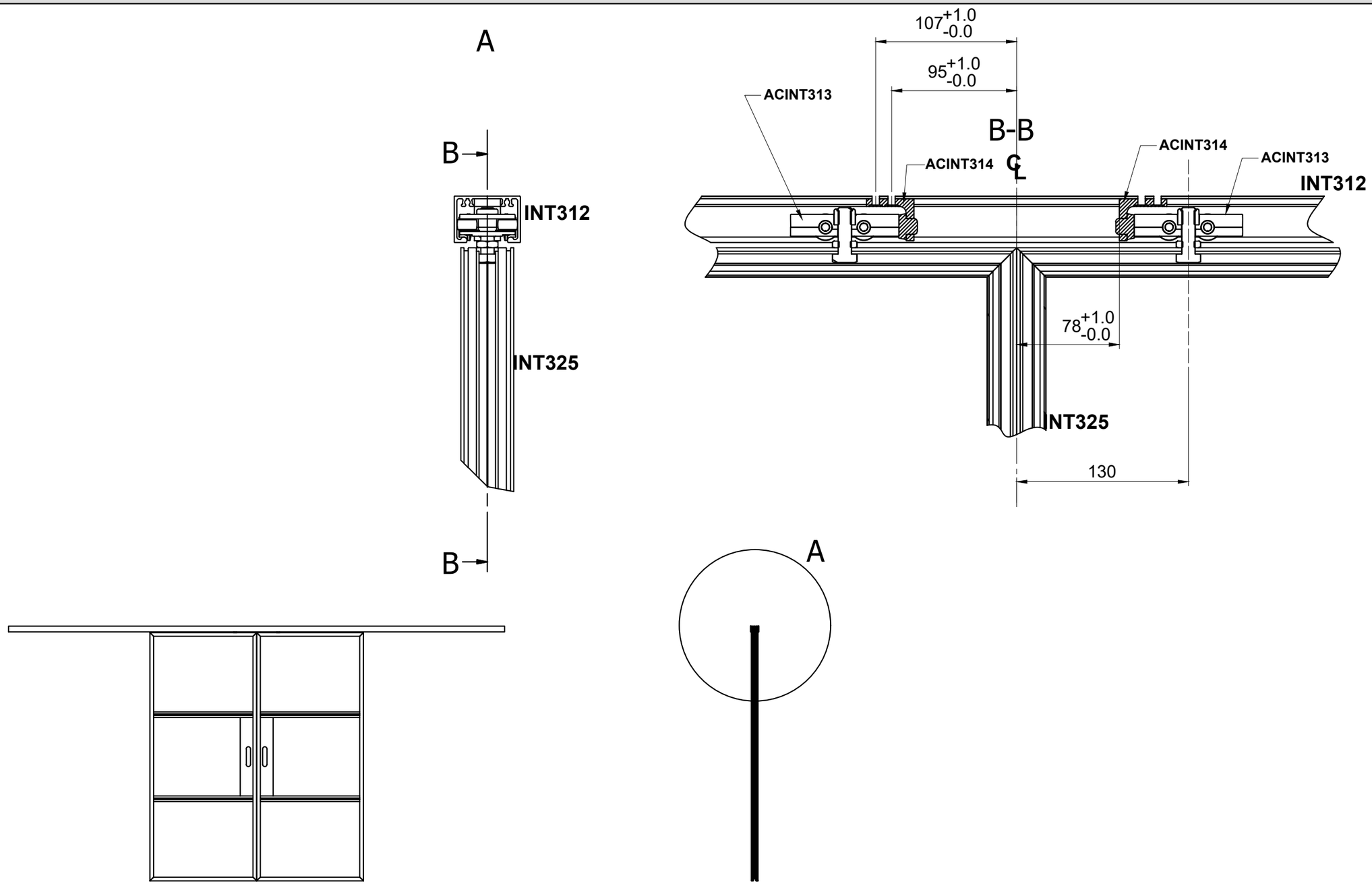

Do Not Scale From This Drawing

Bottom Guide Fixing - ACINT325

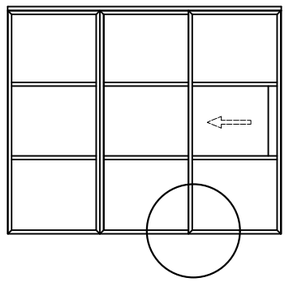

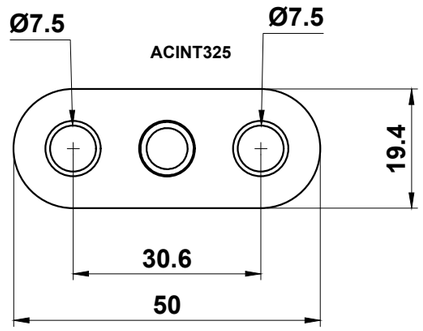

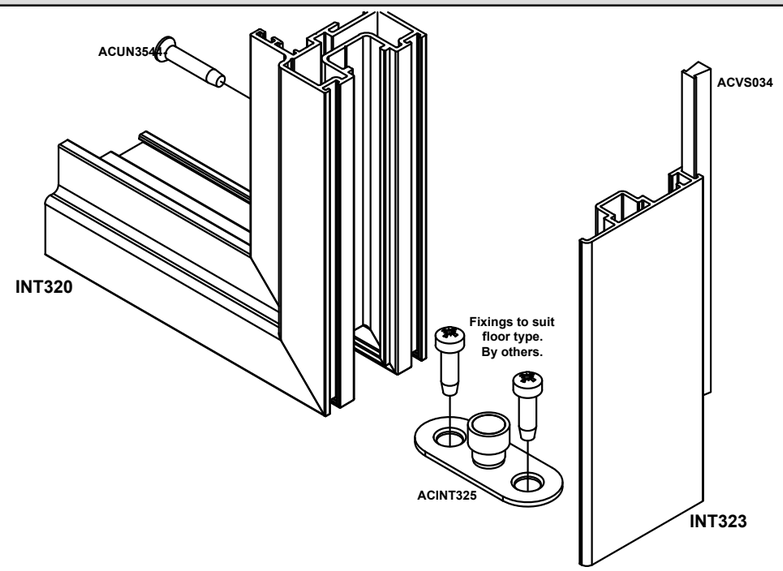

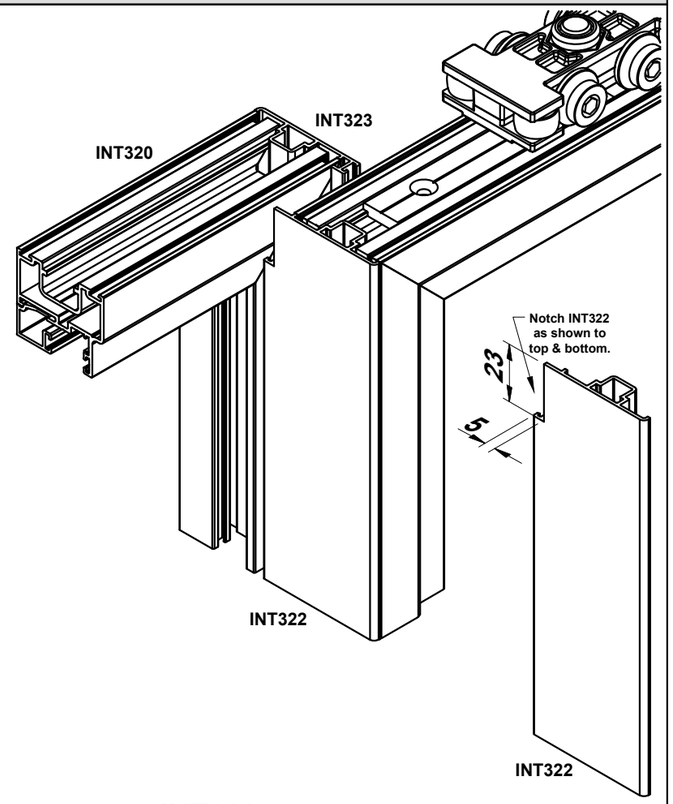

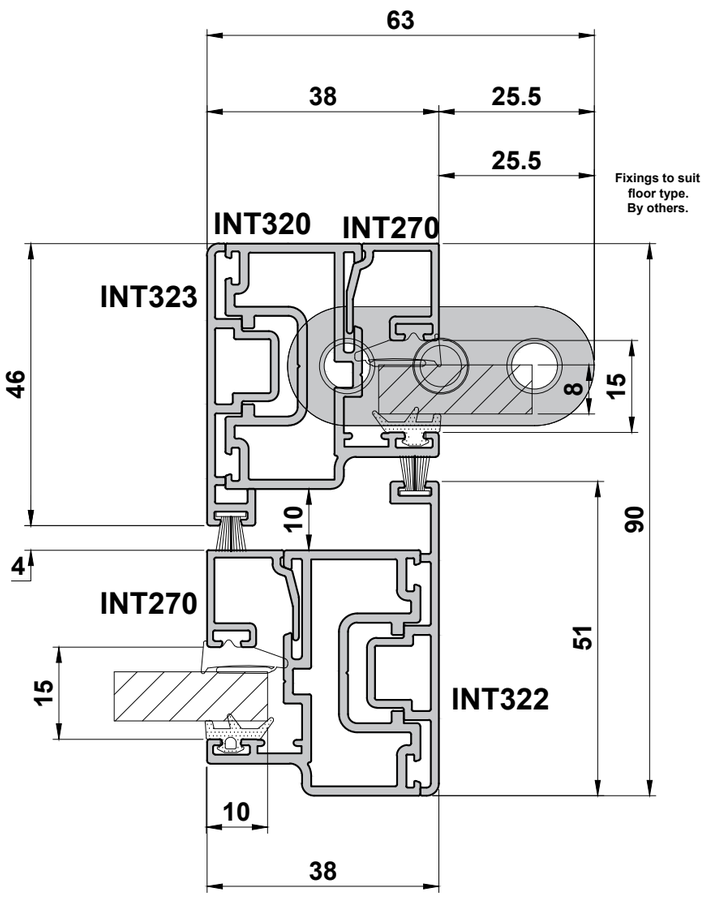

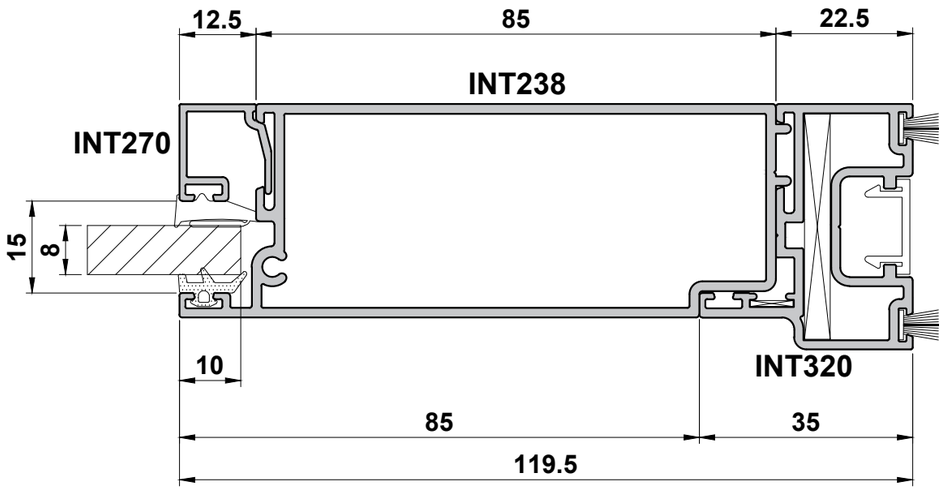

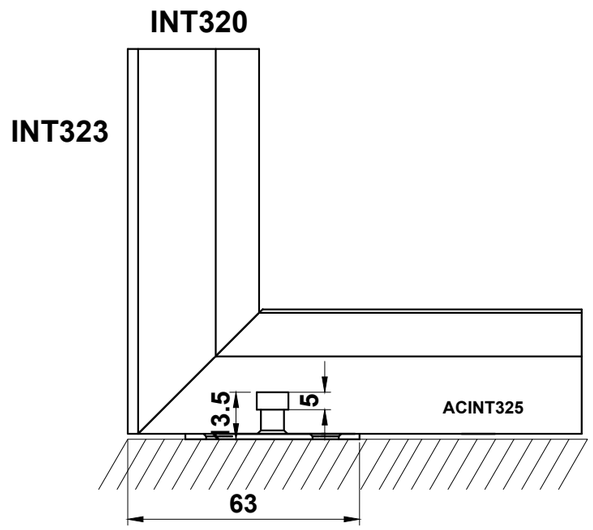

Note:

Example position shown.
Position may vary depending on configuration & site limitations.

Do Not Scale From This Drawing

ACINT521 Preparation & Fixing

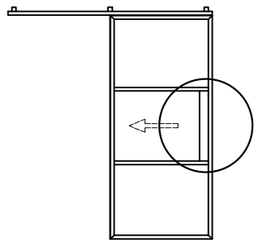

ACINT521 Preparation - External side

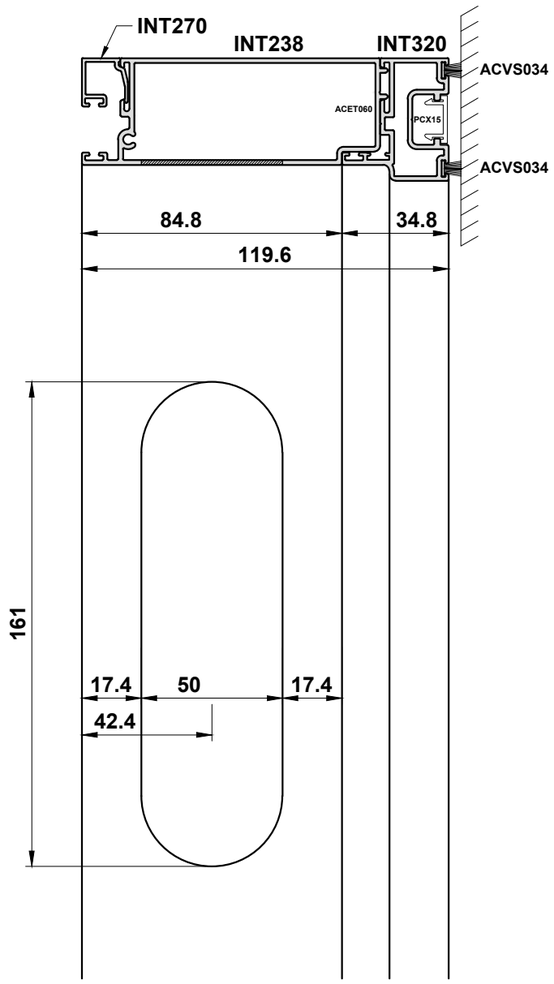

ACINT521 Preparation - Internal side

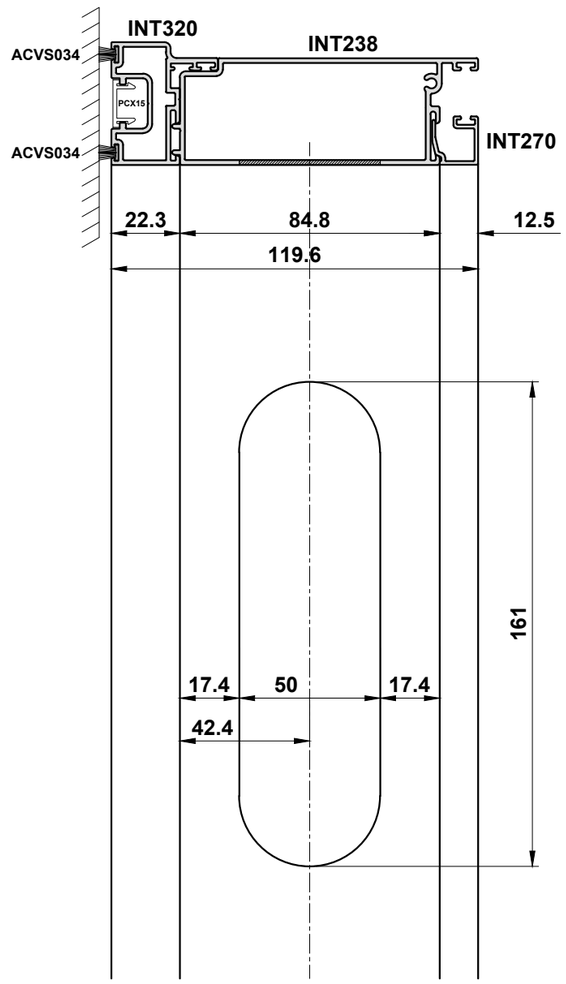

ACINT521
Flush Pull Handle

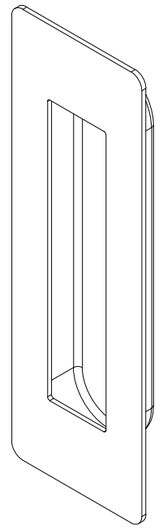

Note:

- **Handles may vary in size and prep may need to be increased**
- **After machining, clamp and glue handle into position using ACSIL04.**

Do Not Scale From This Drawing

Sliding Door System ACSIN510/511/512 Installation

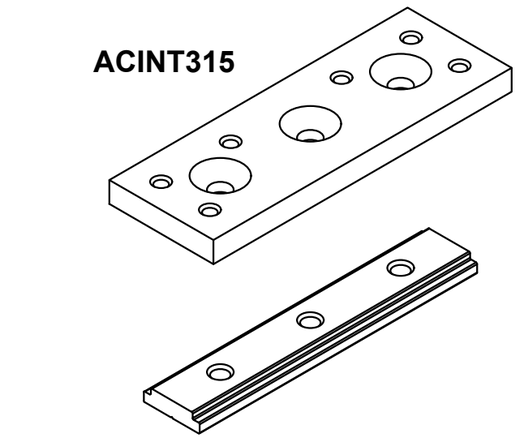

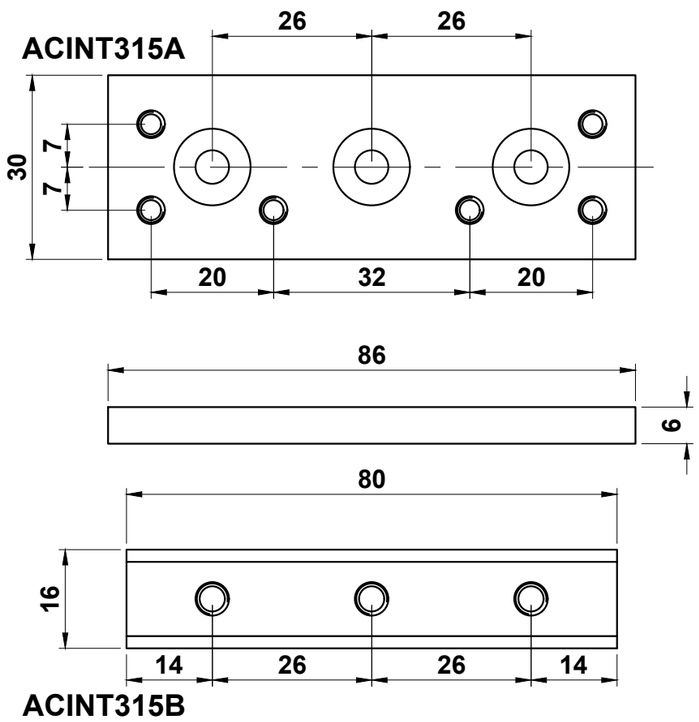

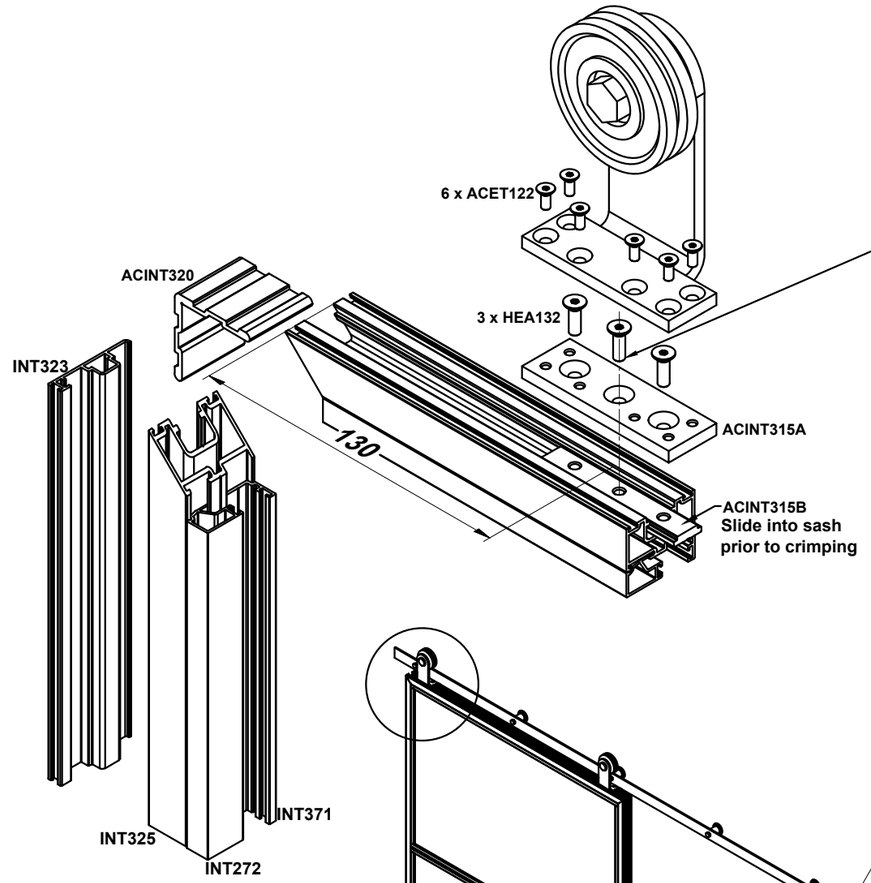

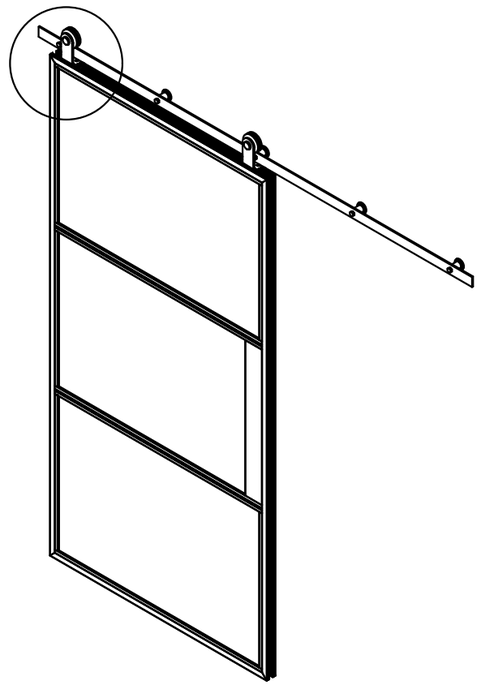

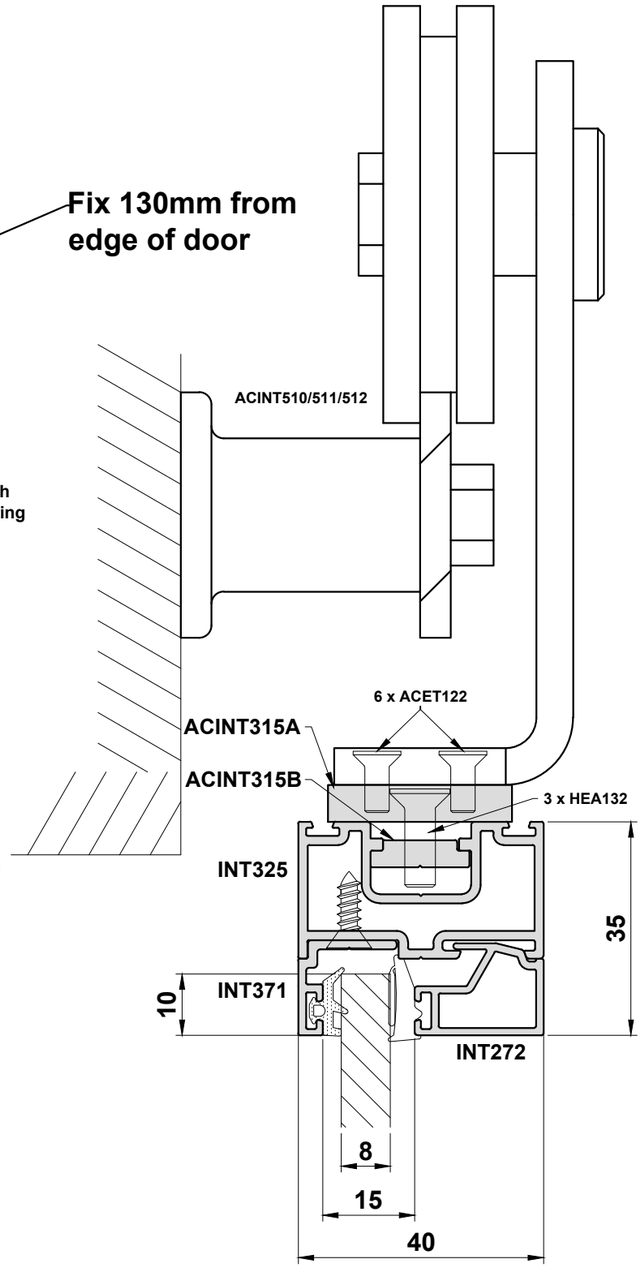

Do Not Scale From This Drawing

Bottom Guide Fixing - ACINT316

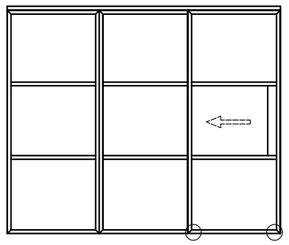

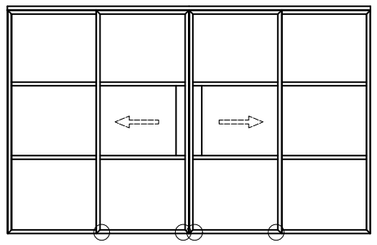

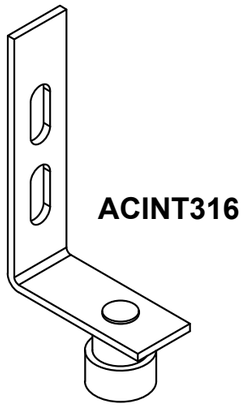

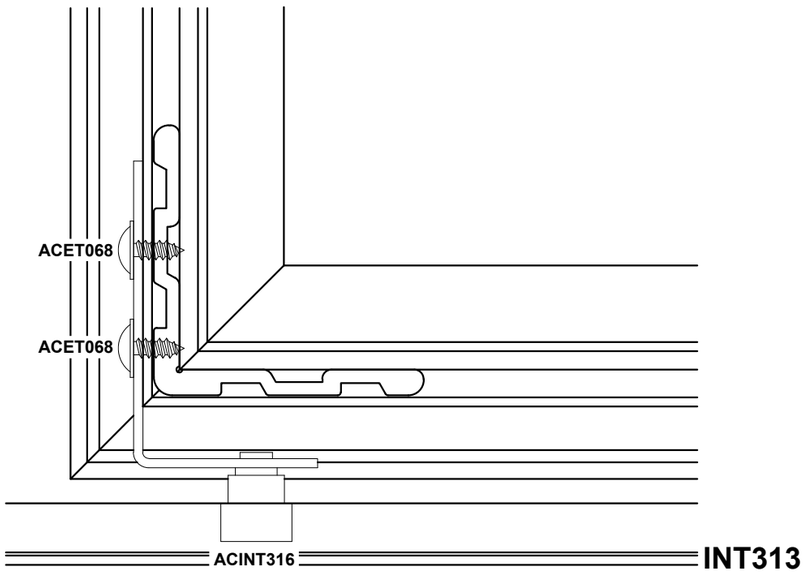

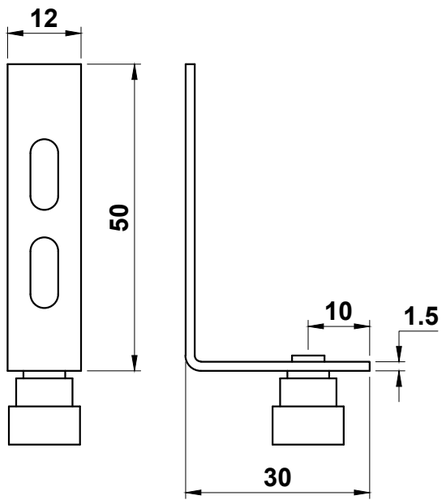

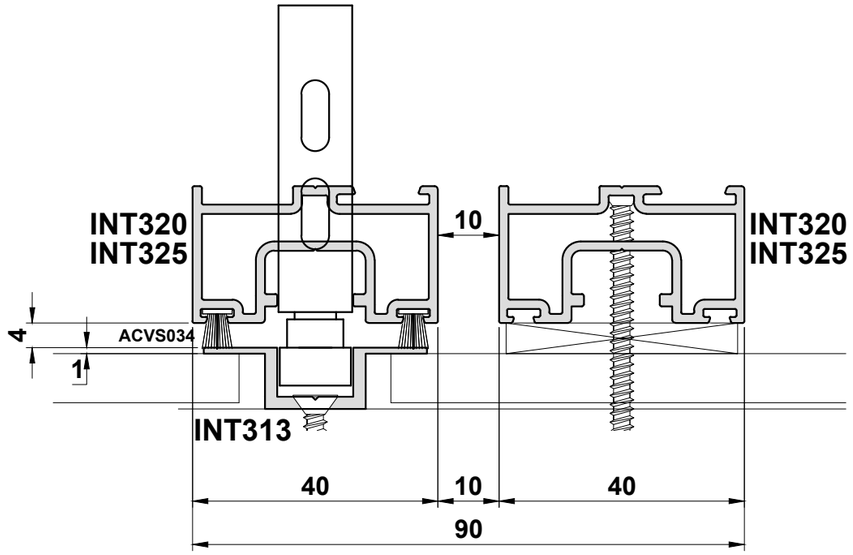

Do Not Scale From This Drawing

ACINT335 Installation Detail

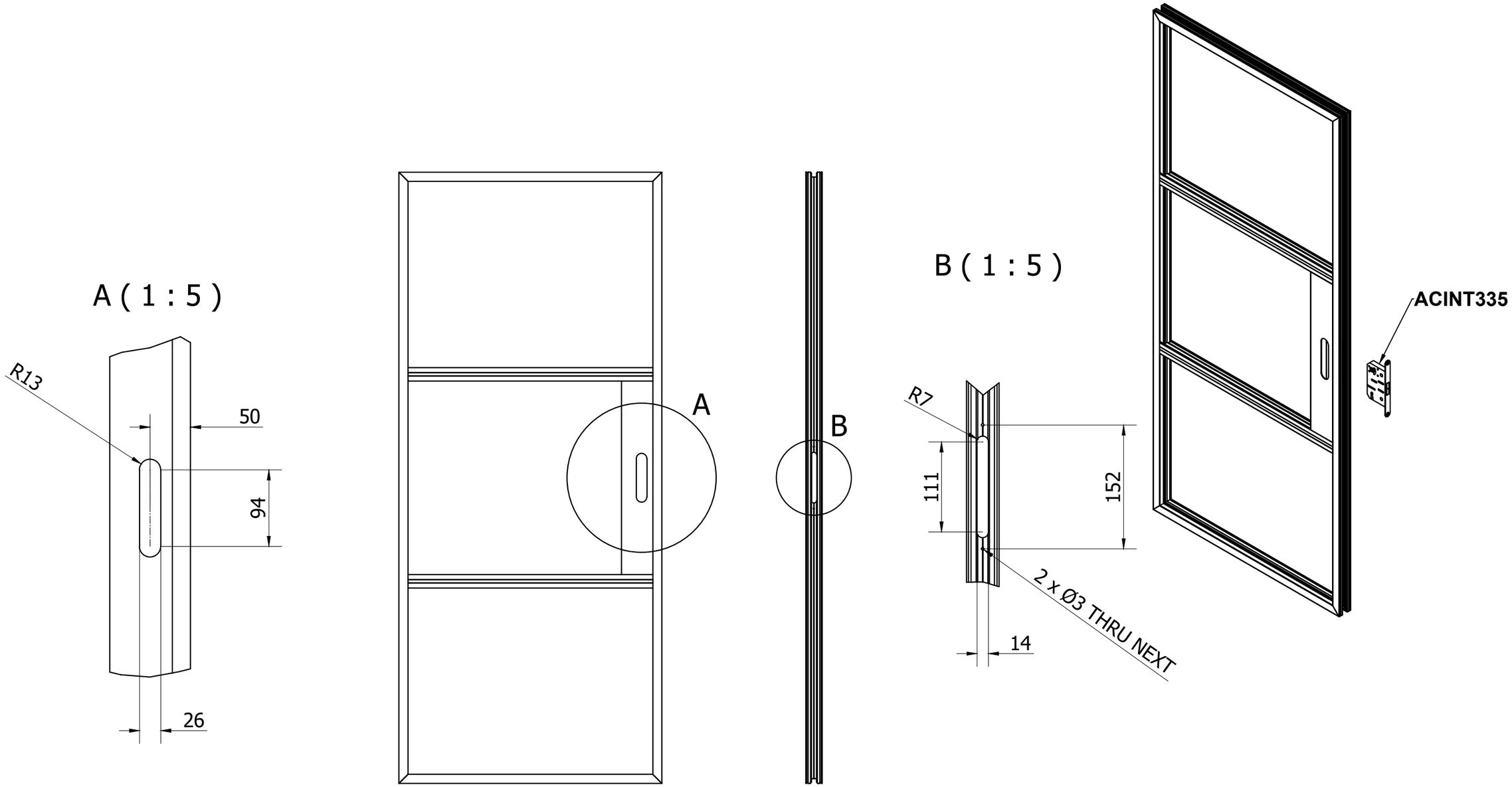

Do Not Scale From This Drawing

ACINT522 and ACINT523 Preparation & Fixing

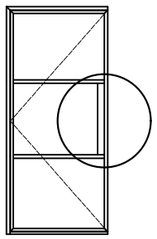

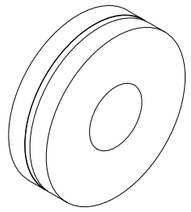

Outside washer

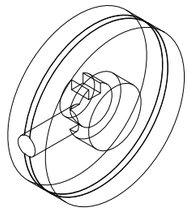

Inside washer

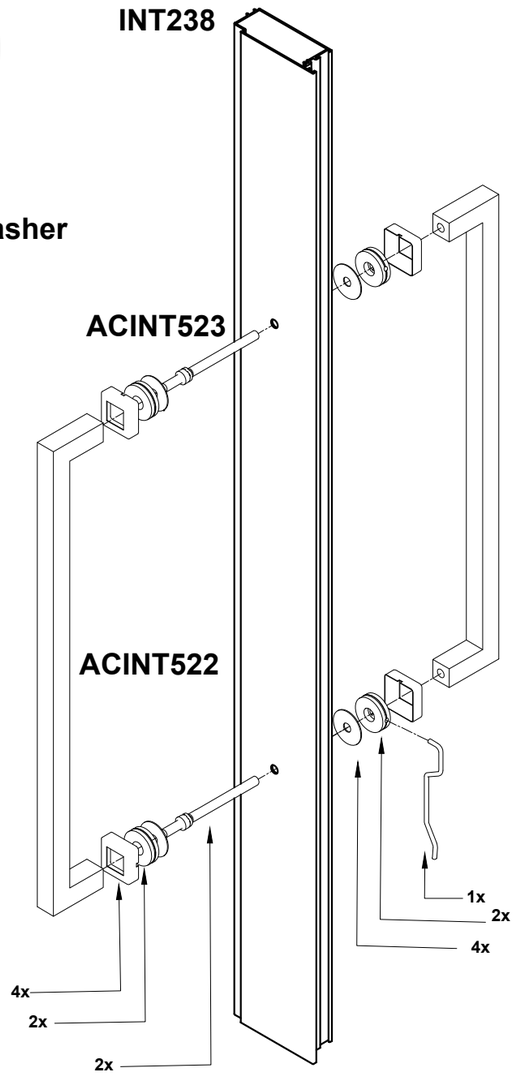

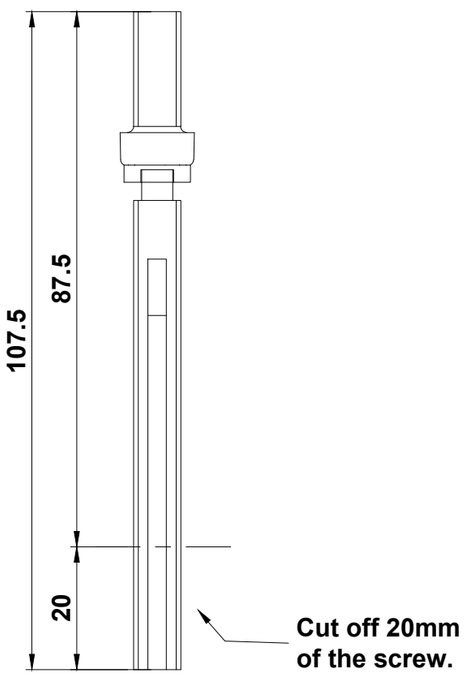

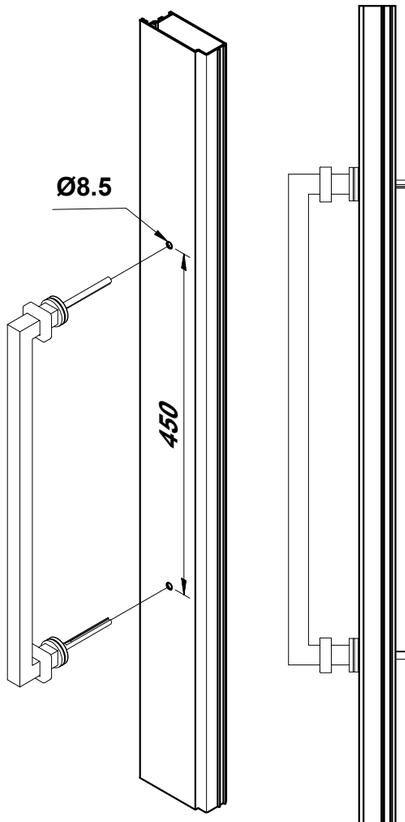

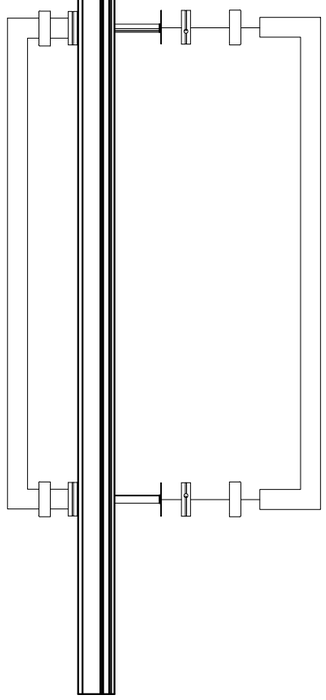

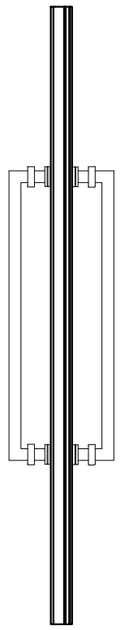

Assembly Instructions

1. Cut 20mm of marked end of screw.

2.Insert short end of screw into handle and tighten.

3.Slide covers on handles.

4. Slide spacers and plastic washers onto installed screws.

5. Fit handle to the outside face with screws going through Ø 8.5mm holes.

6. On the inside of profile, place washers and spacers on protruding screws.

7. Using included tool, tighten screw to handle.

8. Fit covers.

Do Not Scale From This Drawing

ACW20065 Multi-point Lock Installation

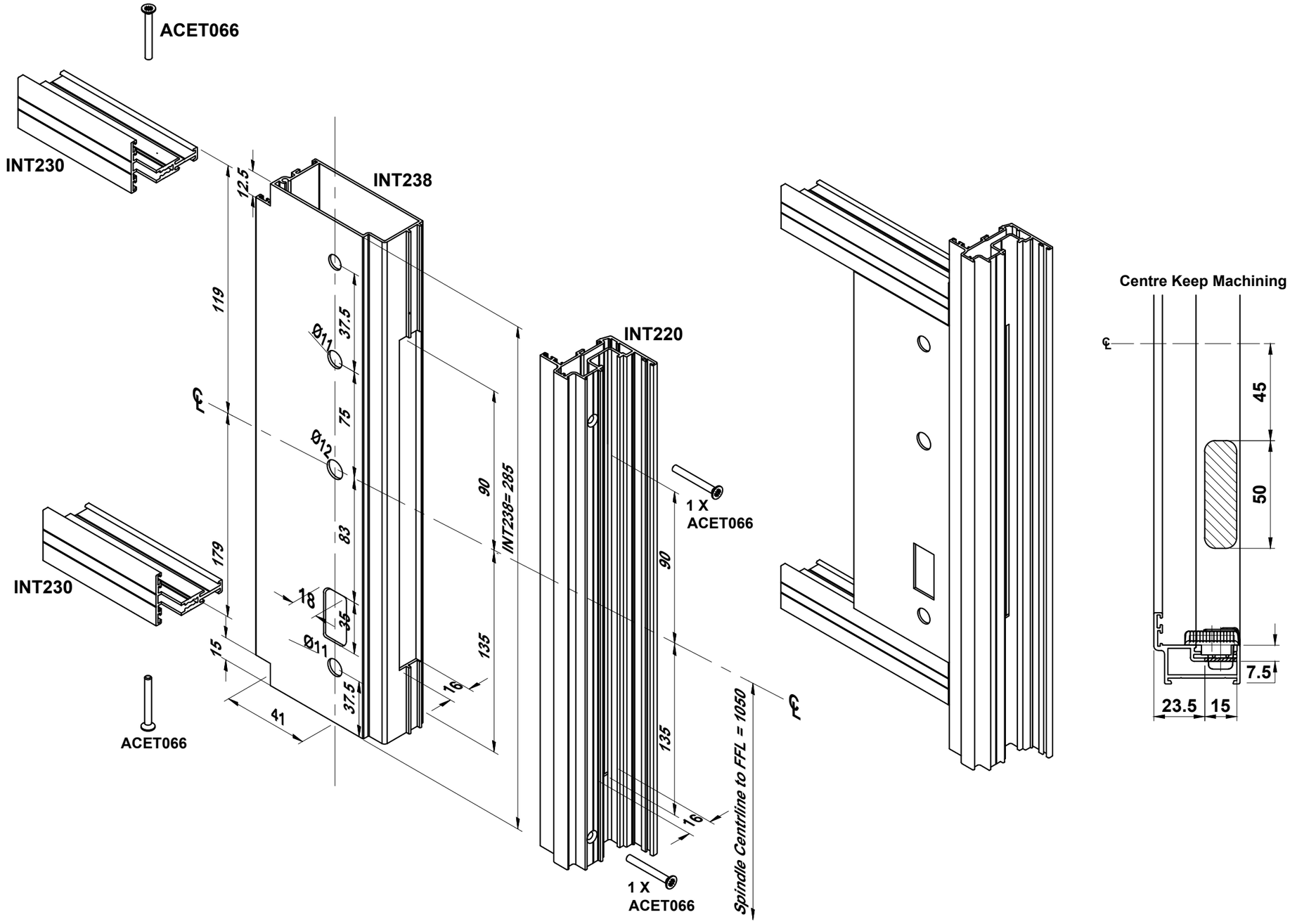

Lock	Accessories	QTY
ACW20065	ACCY4525NKTTS3	1
	ACW20166 L/R	1
	ACW20067	4
	ACSM060	1 Pair

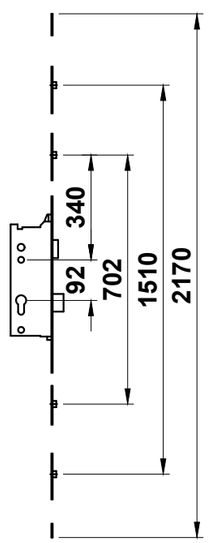

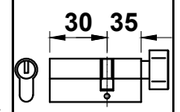

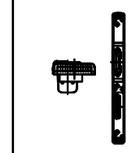

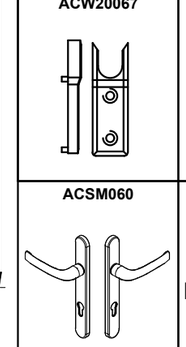

Do Not Scale From This Drawing

ACW20065 Multi-poit Lock Installation

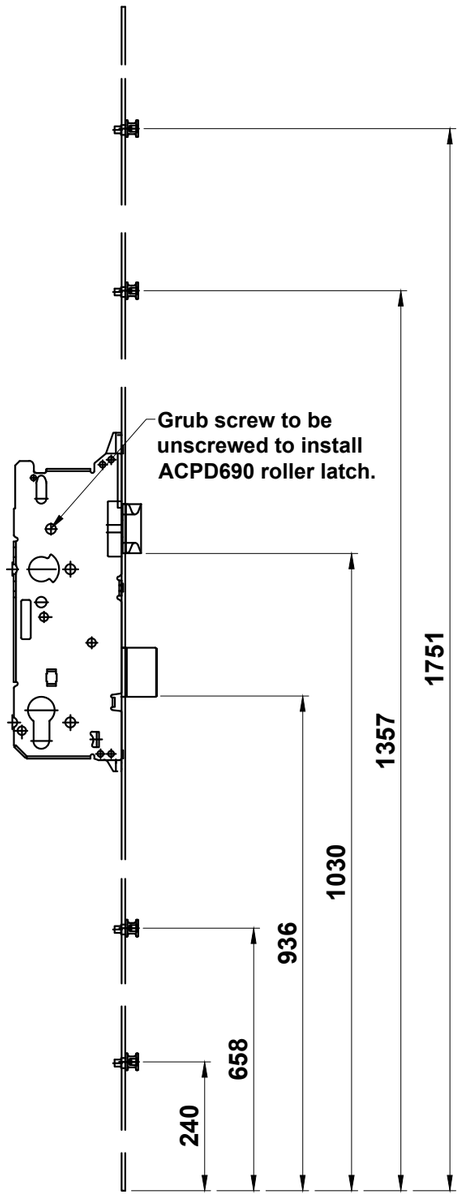

Locking Positions (in unlocked position)

Lock Fixing to Sash

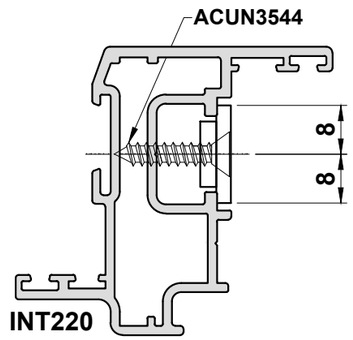

Lock Detail on Sash

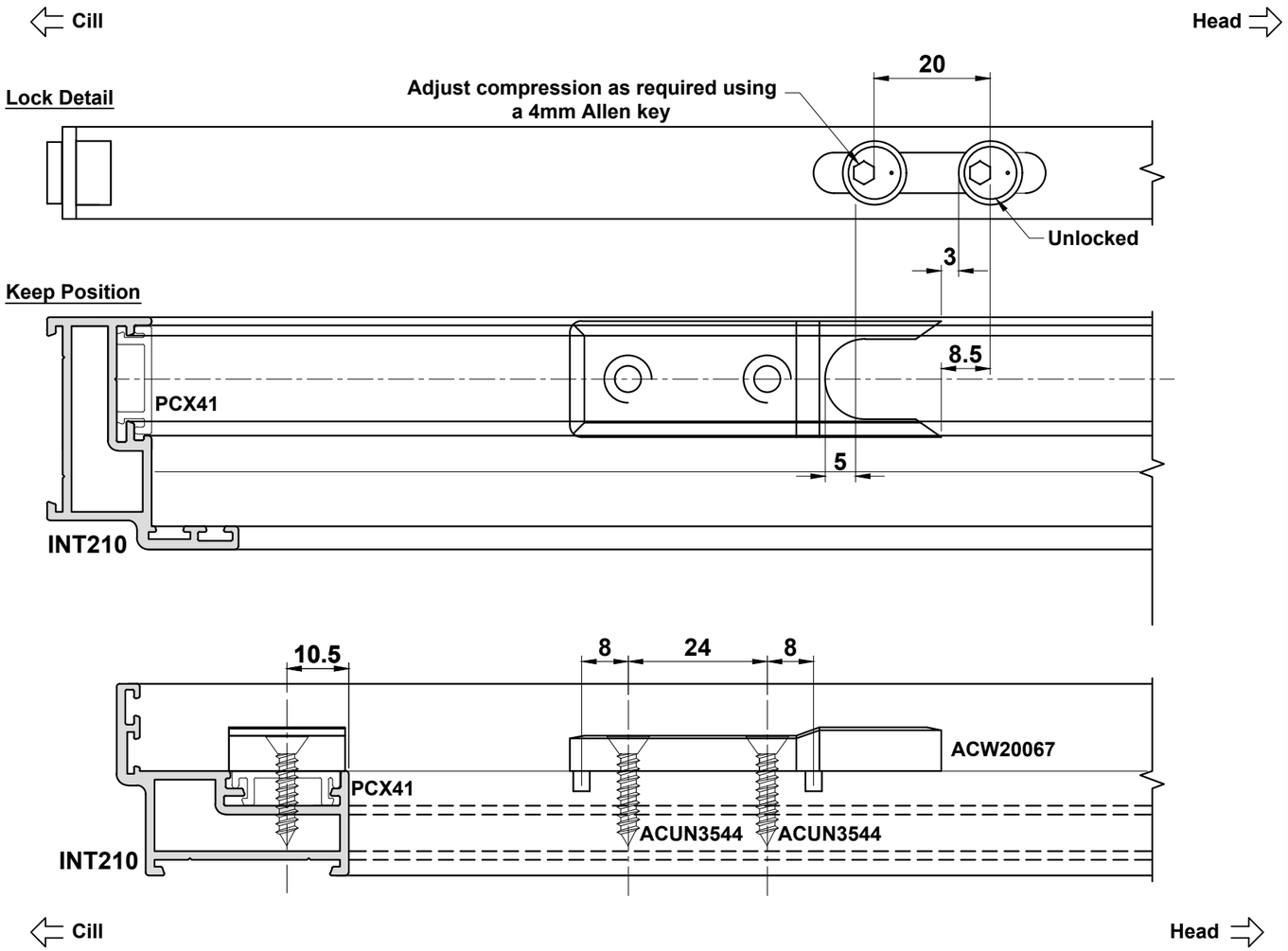

Do Not Scale From This Drawing

Pivot Door - ACSIN201 Preparation & Fixing (Top Detail)

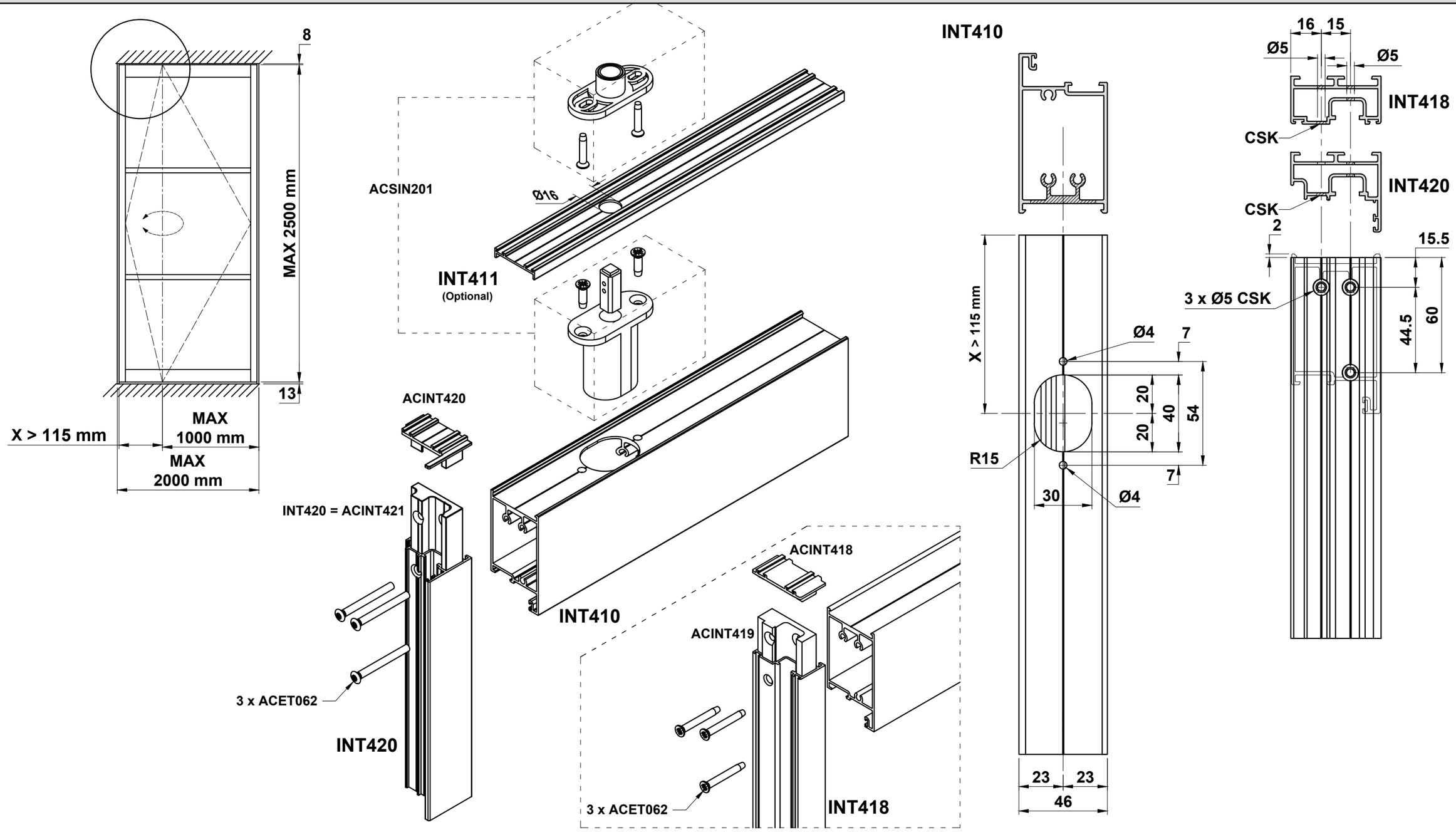

Do Not Scale From This Drawing

smart
architectural aluminium

Pivot Door - ACSIN201 Preparation & Fixing (Bottom Detail)

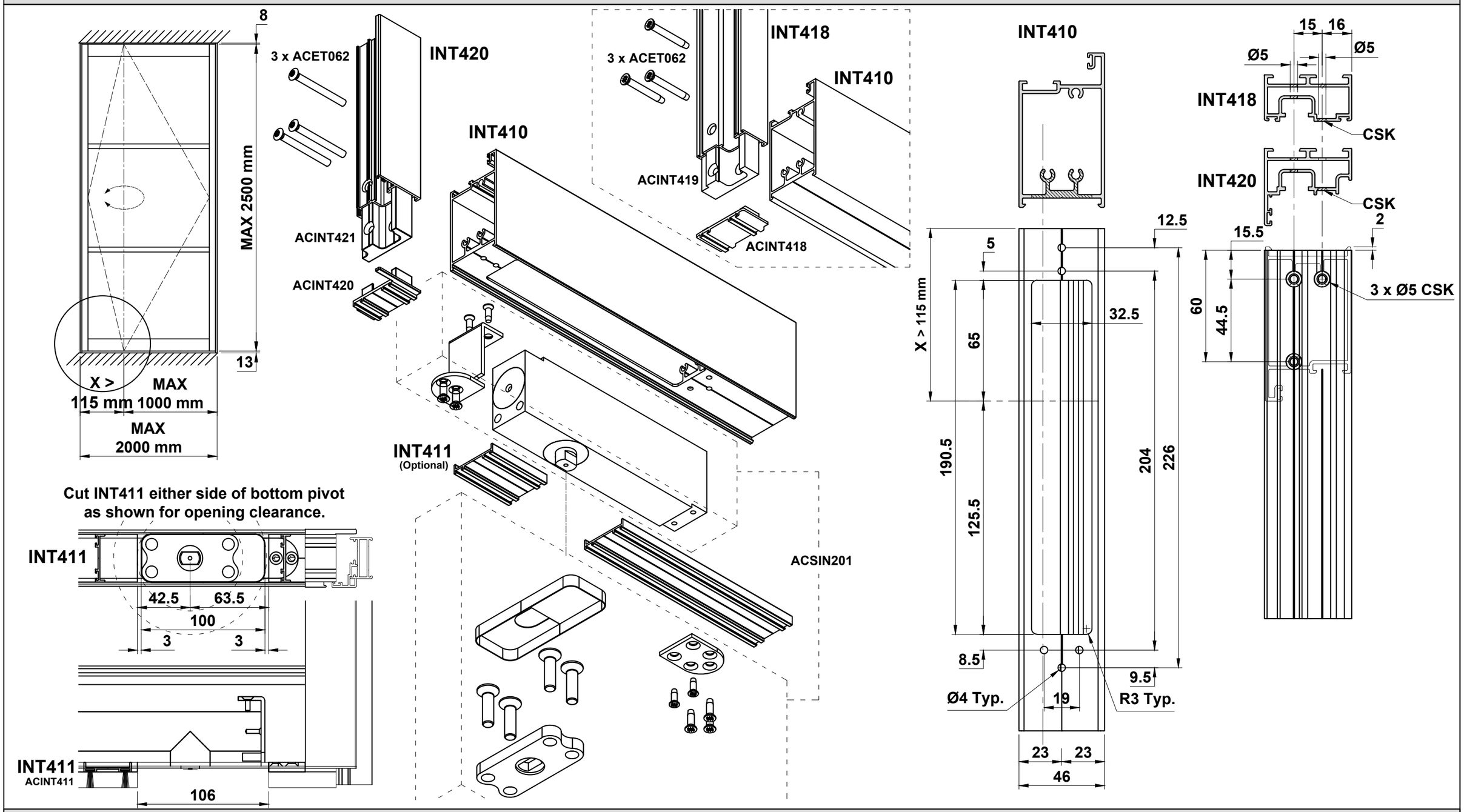

Do Not Scale From This Drawing

Draft : Do Not Issue

Glazing Details - Fixed Screens, Hinged & Sliding Doors

6mm Glazing

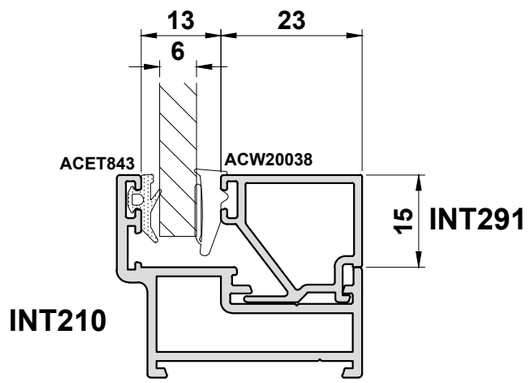

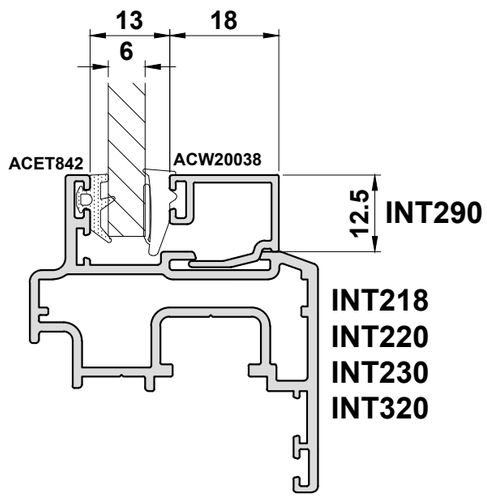

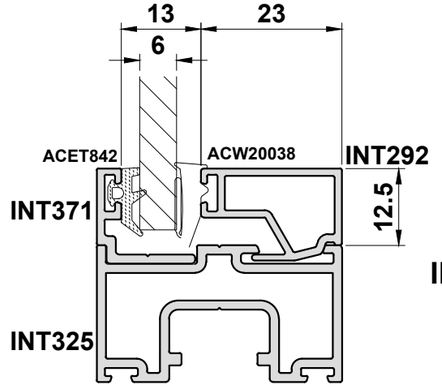

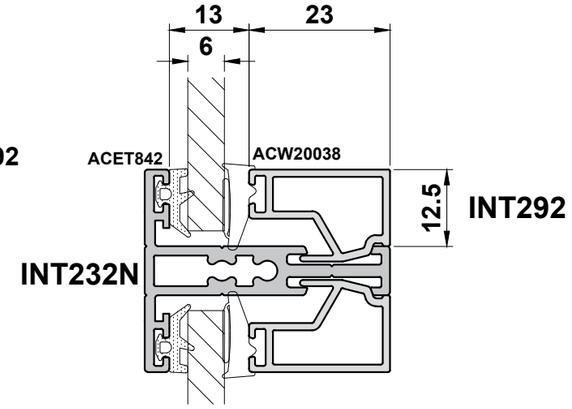

8mm Glazing

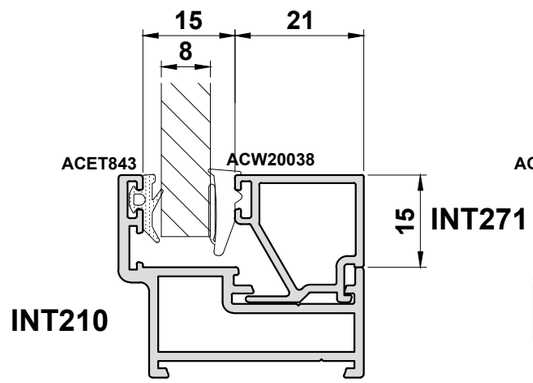

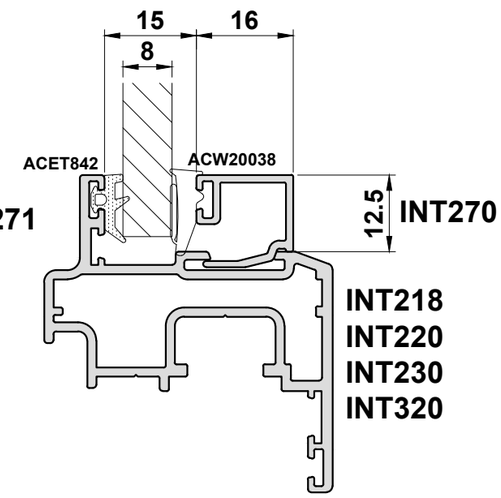

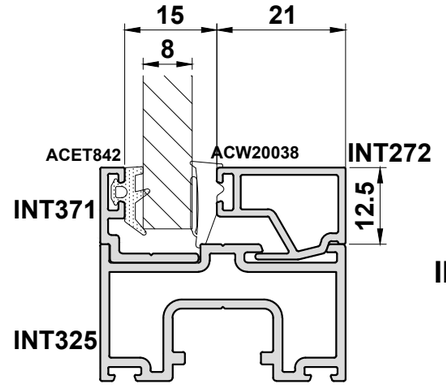

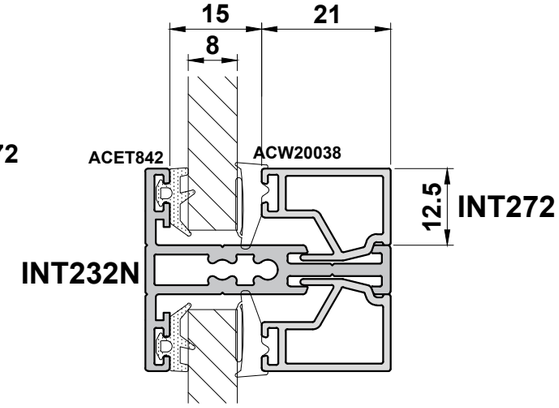

Please note glazing panels can be ordered through Smart Systems at the following link:

https://smartdoorbuilder.co.uk/

Do Not Scale From This Drawing

Glazing Details - Fixed Screens, Hinged & Sliding Doors

10mm Glazing

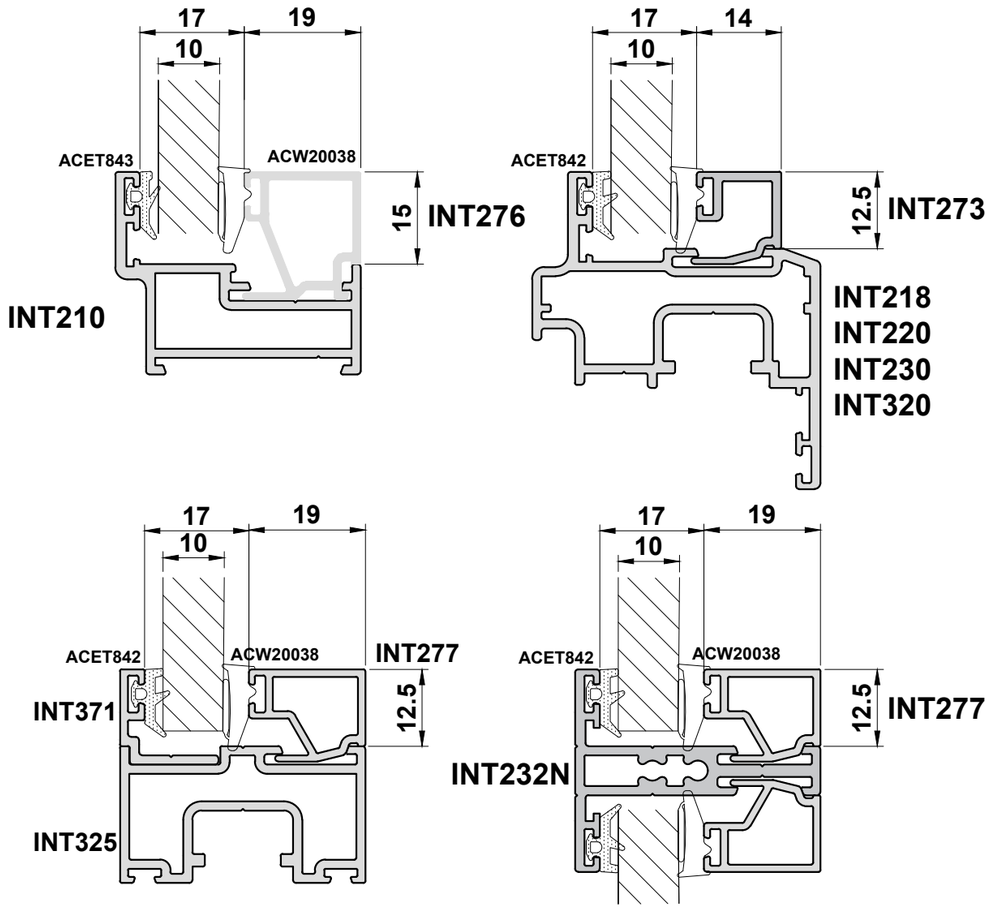

18mm Glazing

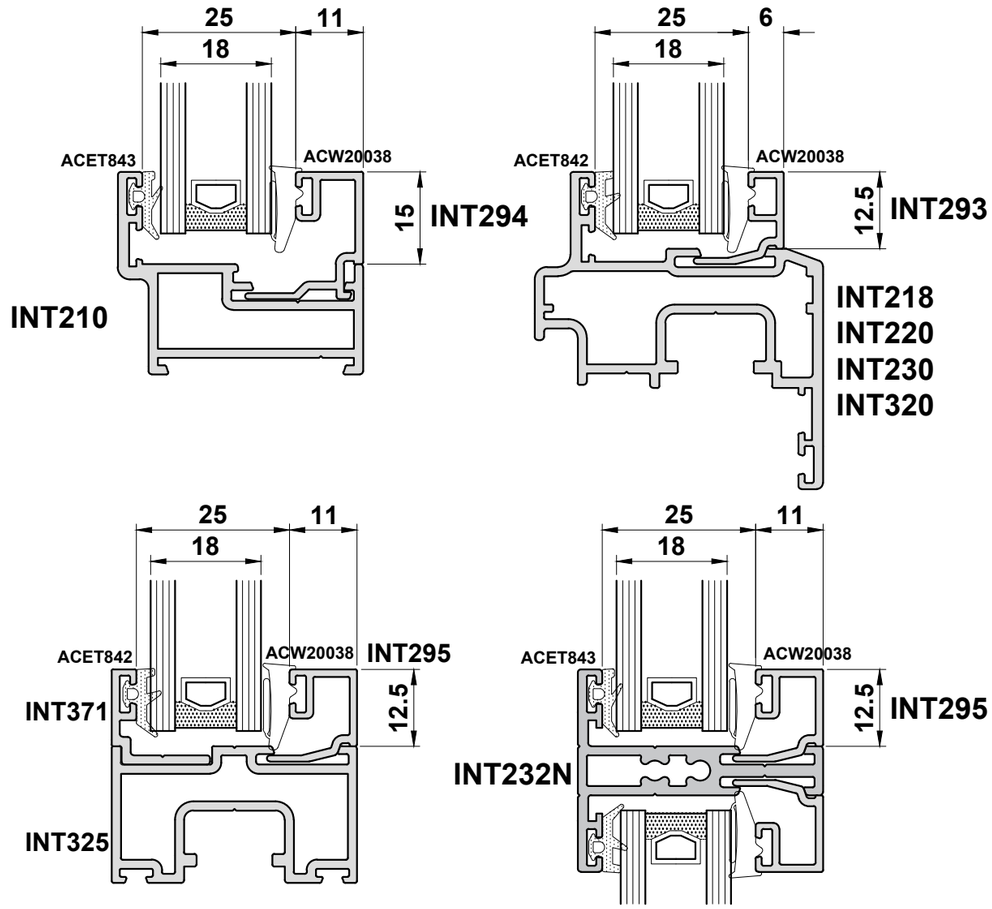

Do Not Scale From This Drawing

ISSUED: March 2025

Glazing Details - Pivot Doors

6mm Glazing

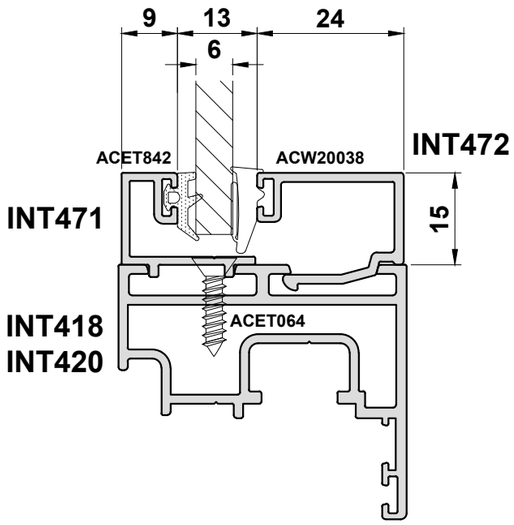

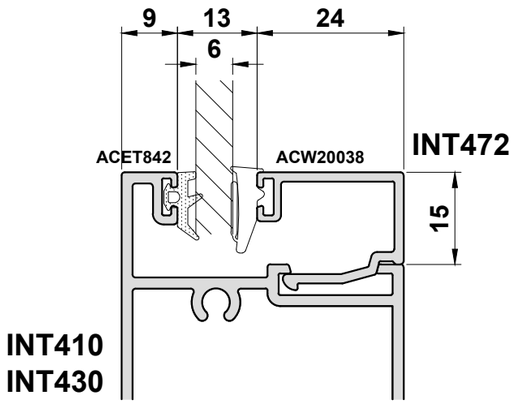

8mm Glazing

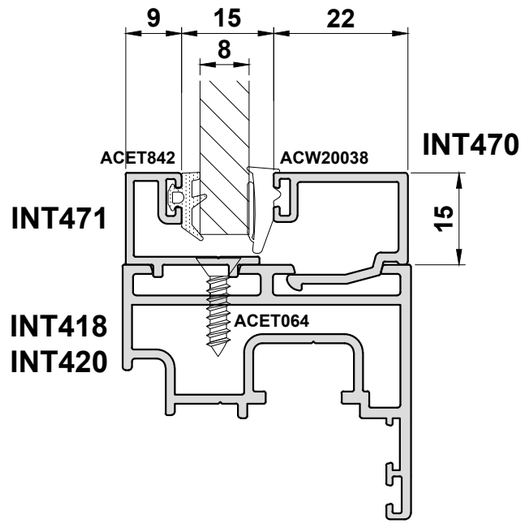

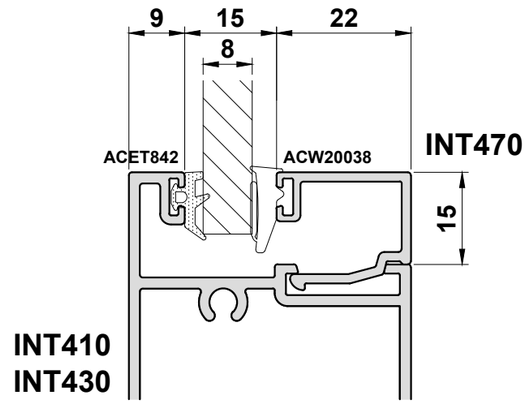

10mm Glazing

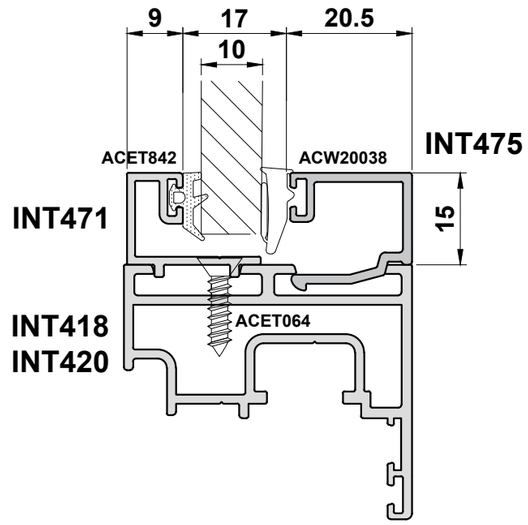

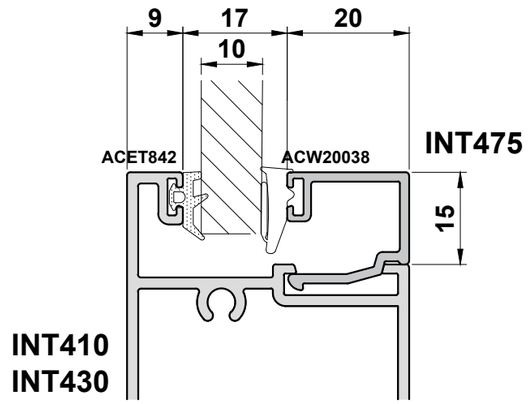

18mm Glazing

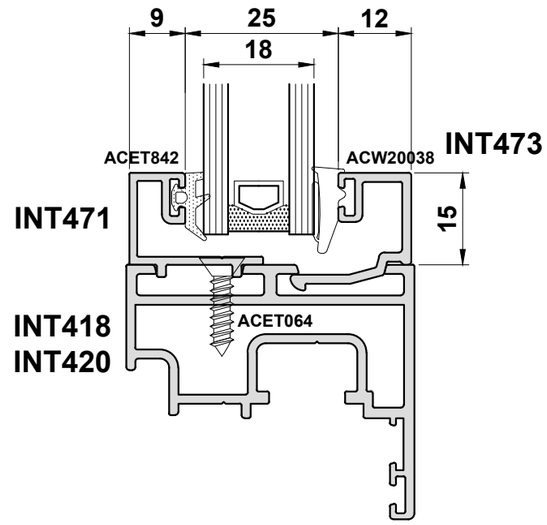

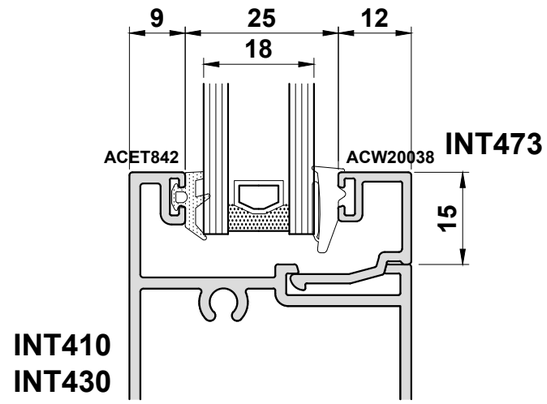

Do Not Scale From This Drawing

Section F

F INT

Sawing Tables

Section F

Cutting Information - Fixed Screen

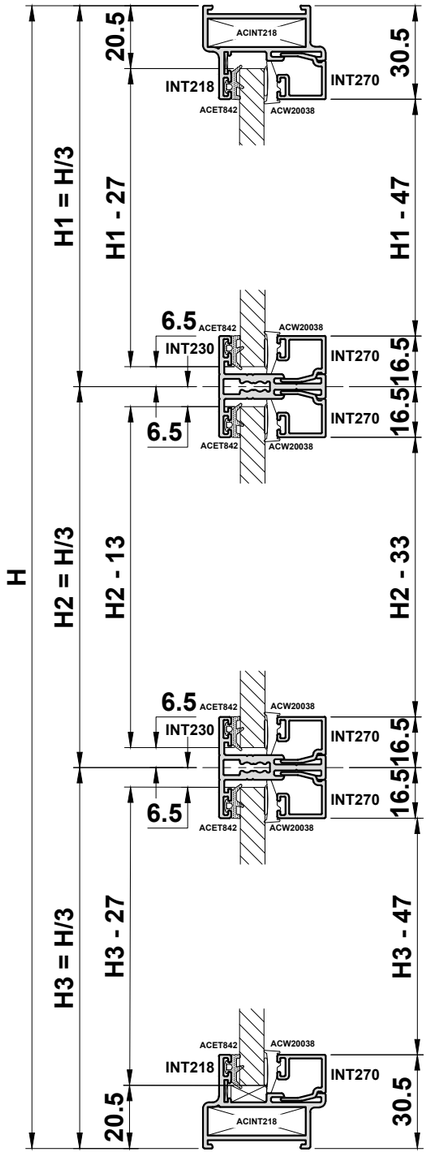

Profile Cutting Schedule				
INT218	4			W/2 - 3
INT218	4			H
INT230	4			W/2 - 39
INT255	1			H
INT270	12			W2 - 39
INT270	4			H3 - 47
INT270	4			H2 - 33
INT270	4			H1 - 47

Accessories		
ACET045	Chevrons	8
ACET060	Screws	300mm centres
ACET066	Screws	8
ACET067	Screws	16
ACET842	E Gasket	12(W/2-44) + 4(H-41)
ACINT218	Outer Frame Cleats	8
ACINT230	Transom Brackets	8
ACUN3547	M4 Connecting Screws	8
ACW20038	Wedge Gasket	12(W/2-44) + 4(H-41)

Glass		
G1	2	W/2 - 44 X H1 - 27
G2	2	W/2 - 44 X H2 - 13
G3	2	W/2 - 44 X H3 - 27

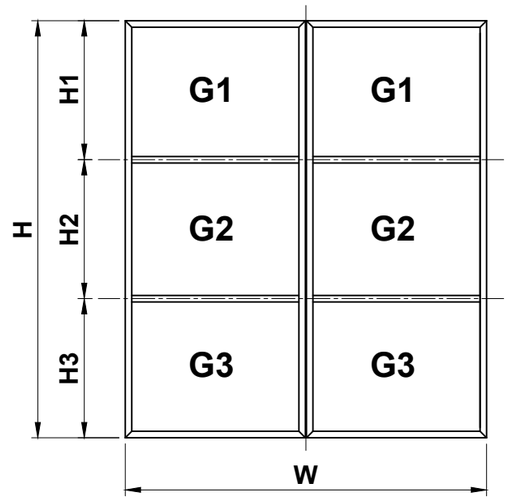

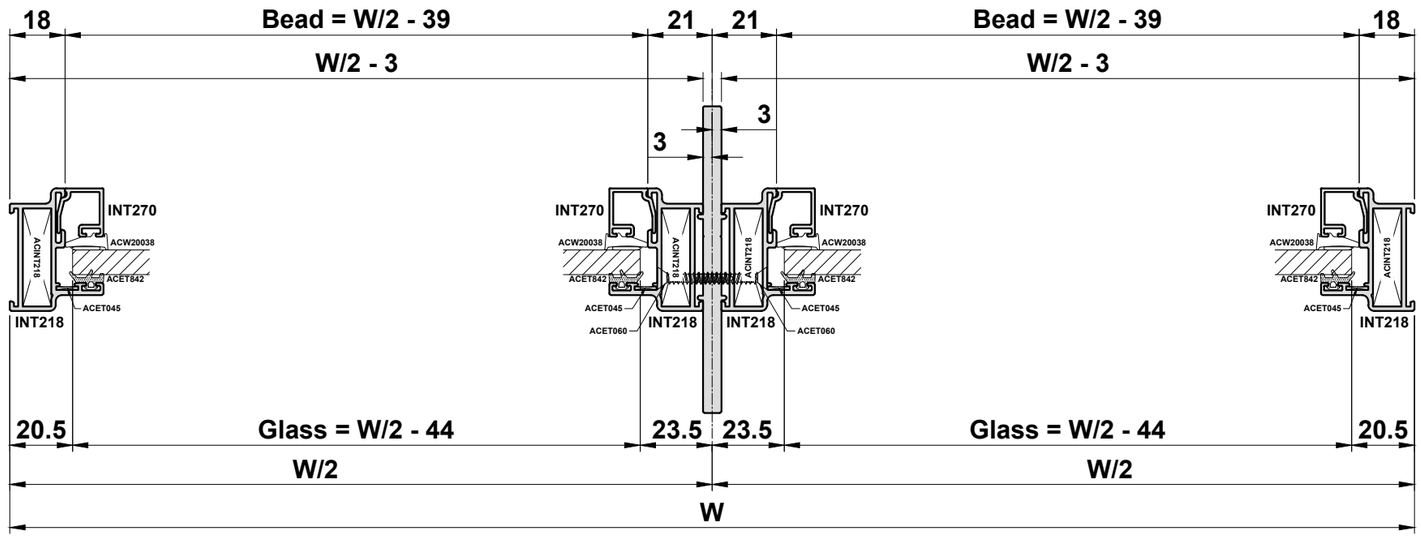

Do Not Scale From This Drawing

Cutting Information - Open In Single Door

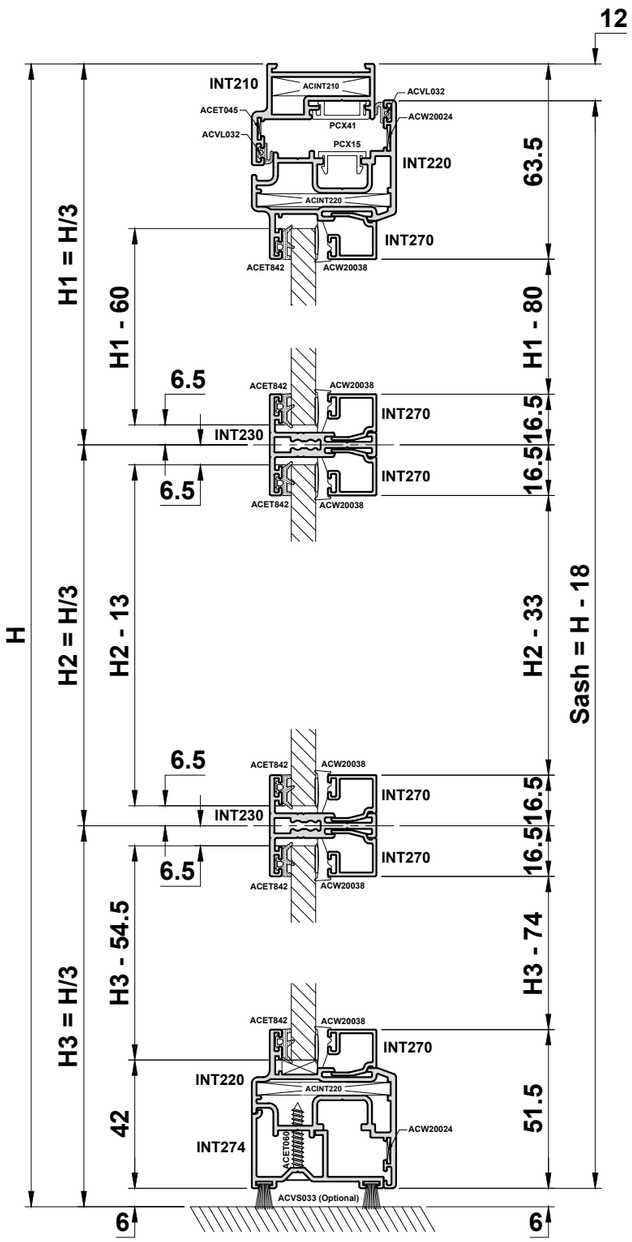

Profile Cutting Schedule		
INT210	1	W
INT210	2	H
INT220	2	W - 24
INT220	2	H - 18
INT230	2	W - 102
INT238	1	H2 - 8
INT270	4	W - 102
INT270	2	W - 187
INT270	2	H3 - 74
INT270	2	H2 - 33
INT270	2	H1 - 80
INT274	1	W - 61
PCX15	1	W - 72
PCX15	2	H - 55.5
PCX41	1	W - 36
PCX41	2	H - 12

Accessories		
ACET045	Chevrons	2
ACET060	Screws	300mm centres
ACET066	Screws	6
ACET067	Screws	8
ACET842	E Gasket	6(W-107) + 2(H-101.5)
ACINT210	Outer Frame Cleats	2
ACINT220	Sash Cleats	4
ACINT221	Hinge Kit	3
ACINT230	Transom Bracket	4
ACINT237/238	Magnetic Sash Lock	1
ACINT239	Forend Cover	1
ACINT240	Striker Cover Plate	1
ACINT241	Latch Cover Tray with magnet	1
ACINT274	End Cap	Pair
ACINT5__	Lever Handle (*)	Pair
ACUN3547	M4 Connecting Screws	4
ACVL032	Outer Frame Seal	1(W-58) + 2(H-29)
ACVL032	Sash Seal	2(W-32) + 2(H-18)
ACVS033	Woolpile (**)	2(W-61)
ACW20024	Chevrons	4
ACW20038	Wedge Gasket	6(W-107) + 2(H-101.5)

(*) See Section B for handle options.
(**) Optional

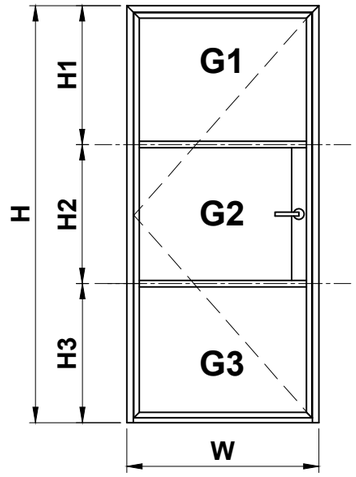

Glass		
G1	1	W - 107 X H1 - 60
G2	1	W - 192 X H2 - 13
G3	1	W - 107 X H3 - 54.5

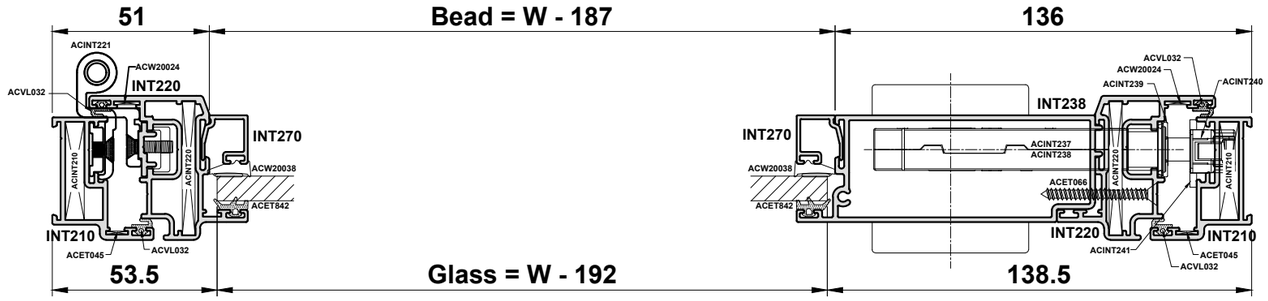

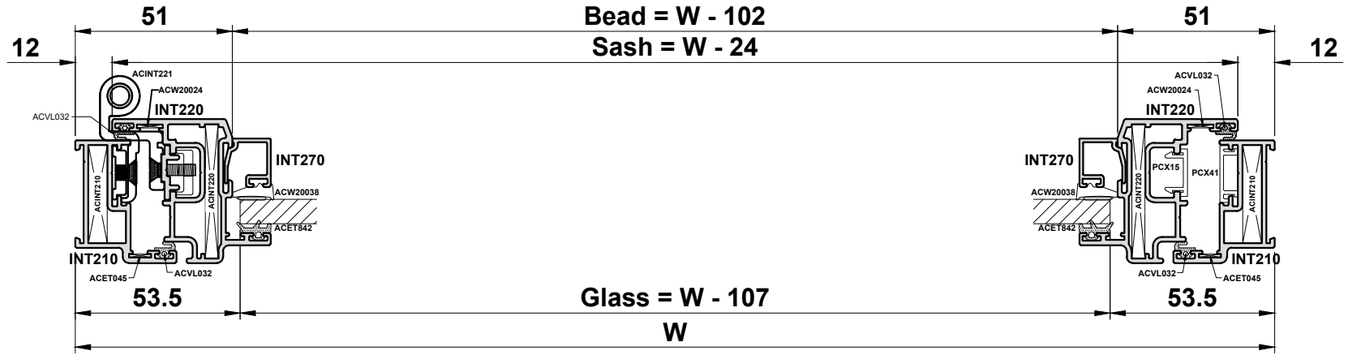

Do Not Scale From This Drawing

Cutting Information - Open In Single Door with Deep Bottom Rail

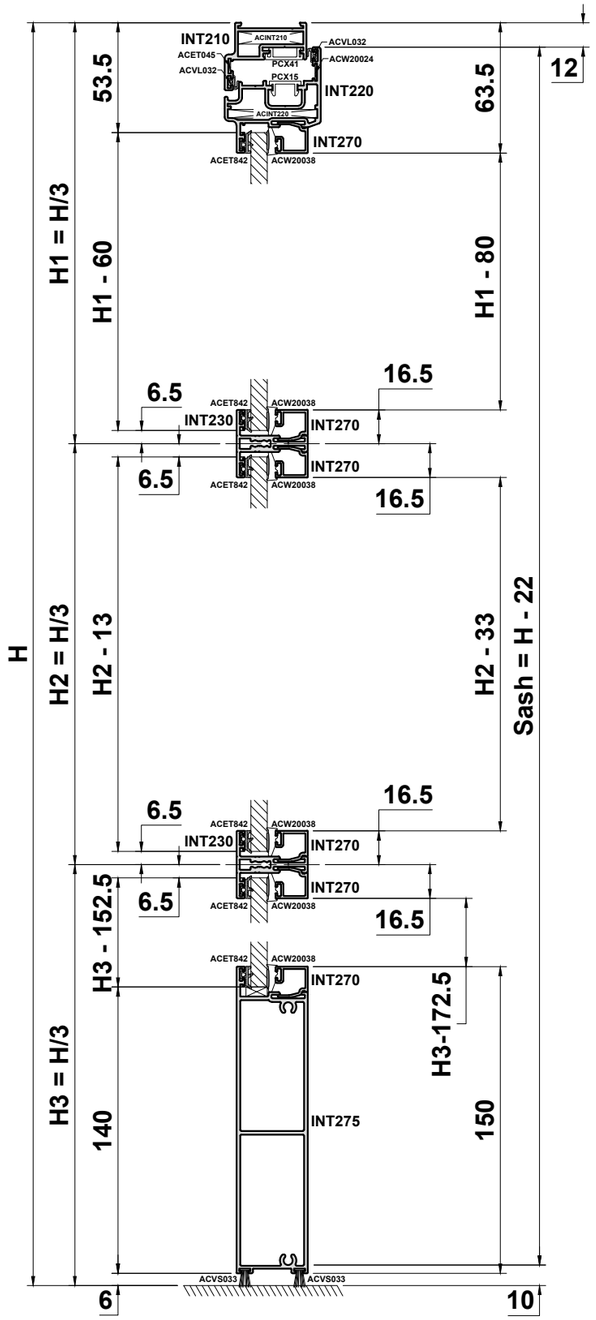

Profile Cutting Schedule				
INT210	1			W
INT210	2			H
INT220	1			W - 24
INT220	2			H - 22
INT230	2			W - 102
INT238	1			H2 - 8
INT270	4			W - 102
INT270	2			W - 187
INT270	2			H3 - 172.5
INT270	2			H2 - 33
INT270	2			H1 - 80
INT275	1			W - 102
PCX15	1			W - 72
PCX15	2			H - 28.5
PCX41	1			W - 36
PCX41	2			H - 12

Accessories		
ACET045	Chevrons	2
ACET062	Screws	4
ACET066	Screws	6
ACET067	Screws	8
ACET842	E Gasket	6(W-107) + 2(H-199.5)
ACINT210	Outer Frame Cleats	2
ACINT220	Sash Cleats	2
ACINT221	Hinge Kit	3
ACINT223	End Cap	1 Pair
ACINT224	Block	1 Pack
ACINT230	Transom Bracket	4
ACINT237/238	Magnetic Sash Lock	1
ACINT239	Forend Cover	1
ACINT240	Striker Cover Plate	1
ACINT241	Latch Cover Tray with magnet	1
ACINT5__	Lever Handle (*)	Pair
ACUN3547	M4 Connecting Screws	4
ACVL032	Outer Frame Seal	1(W-58) + 2(H-29)
ACVL032	Sash Seal	1(W-32) + 2(H-18)
ACVS033	Woolpile	2(W-102)
ACW20024	Chevrons	2
ACW20038	Wedge Gasket	6(W-107) + 2(H-199.5)

(*) See Section B for handle options.

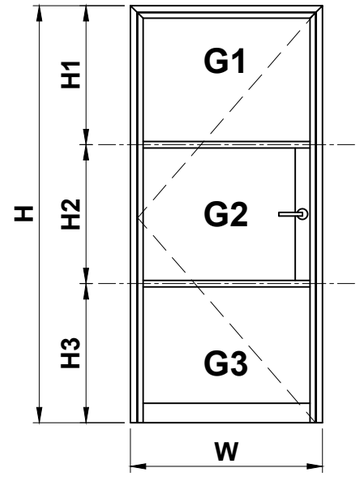

Glass		
G1	1	W - 107 X H1 - 60
G2	1	W - 192 X H2 - 13
G3	1	W - 107 X H3 - 152.5

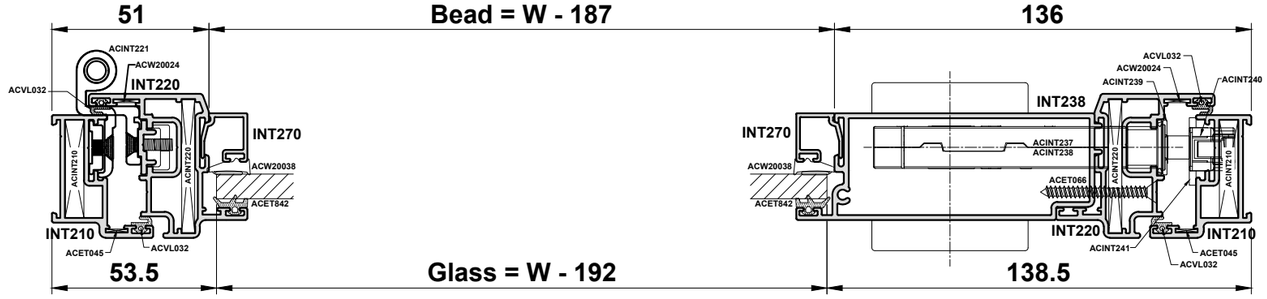

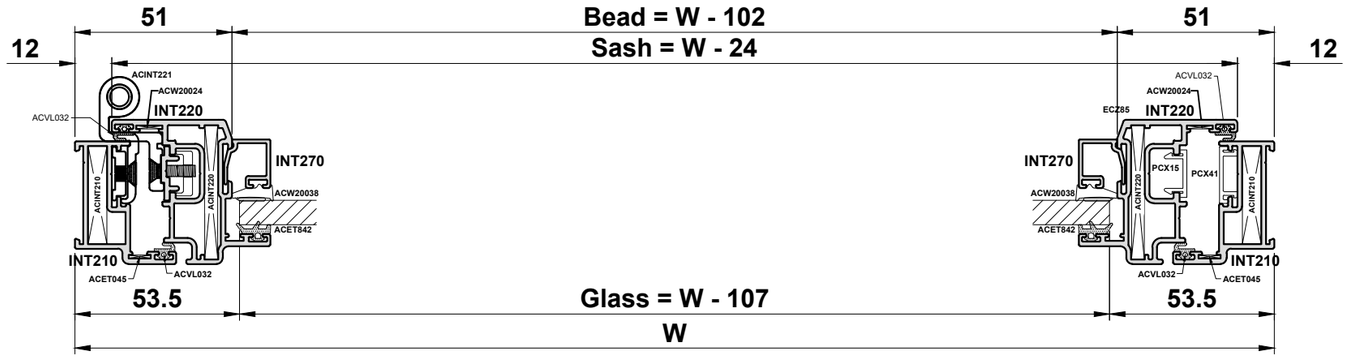

Do Not Scale From This Drawing

Cutting Information - Open In Single Door & Fixed Screen

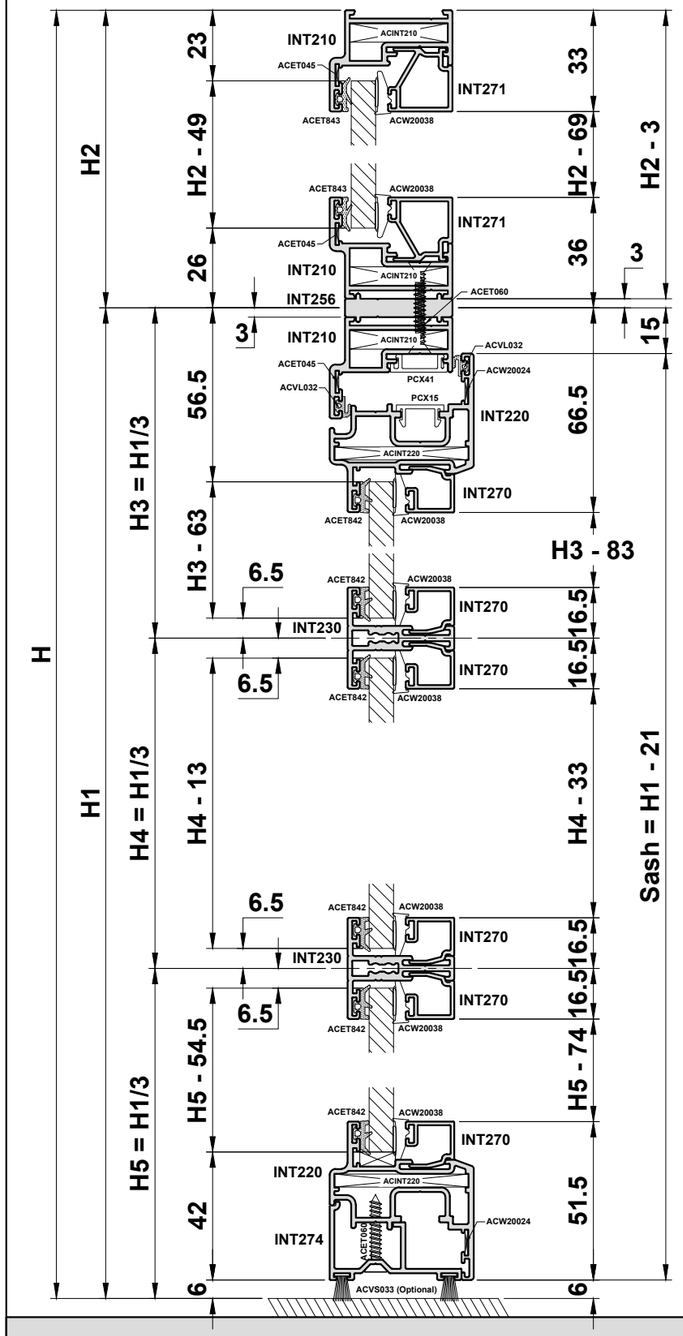

Profile Cutting Schedule				
INT210	3			W
INT210	2			H1 - 3
INT210	2			H2 - 3
INT220	2			W - 24
INT220	2			H1 - 21
INT230	2			W - 102
INT238	1			H4 -8
INT256	1			W
INT270	4			W - 102
INT270	2			W - 187
INT270	2			H5 - 74
INT270	2			H4 - 33
INT270	2			H3 - 83
INT271	2			W - 36
INT271	2			H2 - 69
INT274	1			W - 61
PCX15	1			W - 72
PCX15	2			H1 - 52.5
PCX41	1			W - 36
PCX41	2			H1 - 15

Accessories		
ACET045	Chevrons	6
ACET060	Screws	300mm centres
ACET066	Screws	6
ACET067	Screws	8
ACET842	E Gasket	6(W-107) + 2(H1-104.5)
ACET843	E Gasket	2(W-46) + 2(H2-49)
ACINT210	Outer Frame Cleats	6
ACINT220	Sash Cleats	4
ACINT221	Hinge Kit	3
ACINT230	Transom Bracket	4
ACINT237/238	Magnetic Sash Lock	1
ACINT239	Forend Cover	1
ACINT240	Striker Cover Plate	1
ACINT241	Latch Cover Tray with magnet	1
ACINT274	End Cap	Pair
ACINT5__	Lever Handle (*)	Pair
ACUN3547	M4 Connecting Screws	4
ACVL032	Outer Frame Seal	1(W-58) + 2(H1-32)
ACVL032	Sash Seal	2(W-32) + 2(H1-21)
ACVS033	Woolpile	2(W-61)
ACW20024	Chevrons	4
ACW20038	Wedge Gasket	6(W-107) + 2(H1-104.5)
ACW20038	Wedge Gasket	2(W-46) + 2(H2-49)

(*) See Section B for handle options.

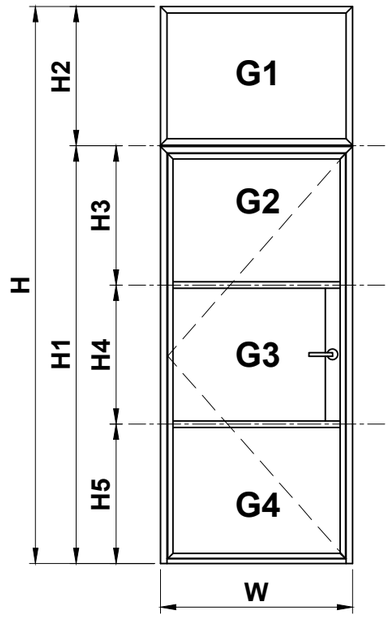

Glass		
G1	1	W - 46 X H2 - 49
G2	1	W - 107 X H3 - 63
G3	1	W - 192 X H4 - 13
G4	1	W - 107 X H5 - 54.5

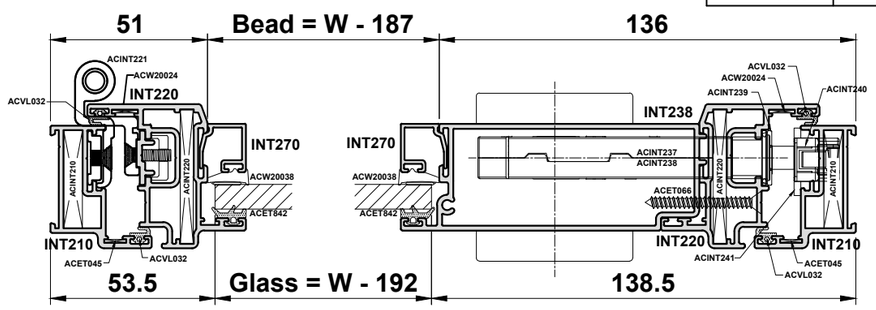

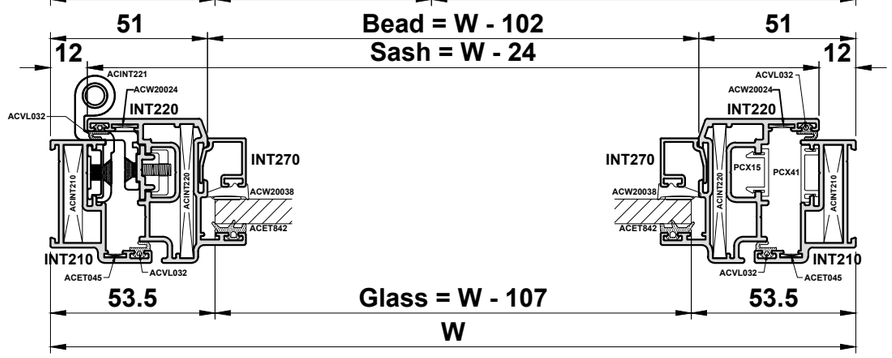

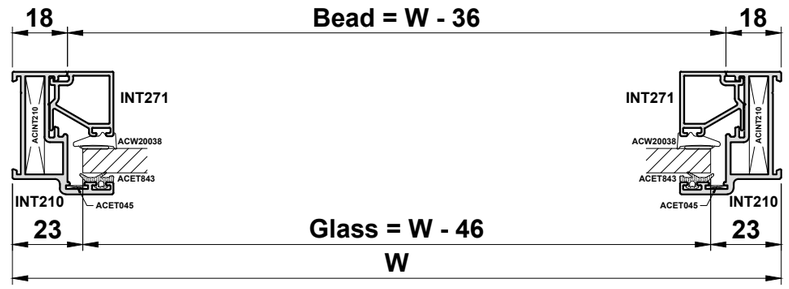

Do Not Scale From This Drawing

Cutting Information - Open In Single Door & Fixed Screen

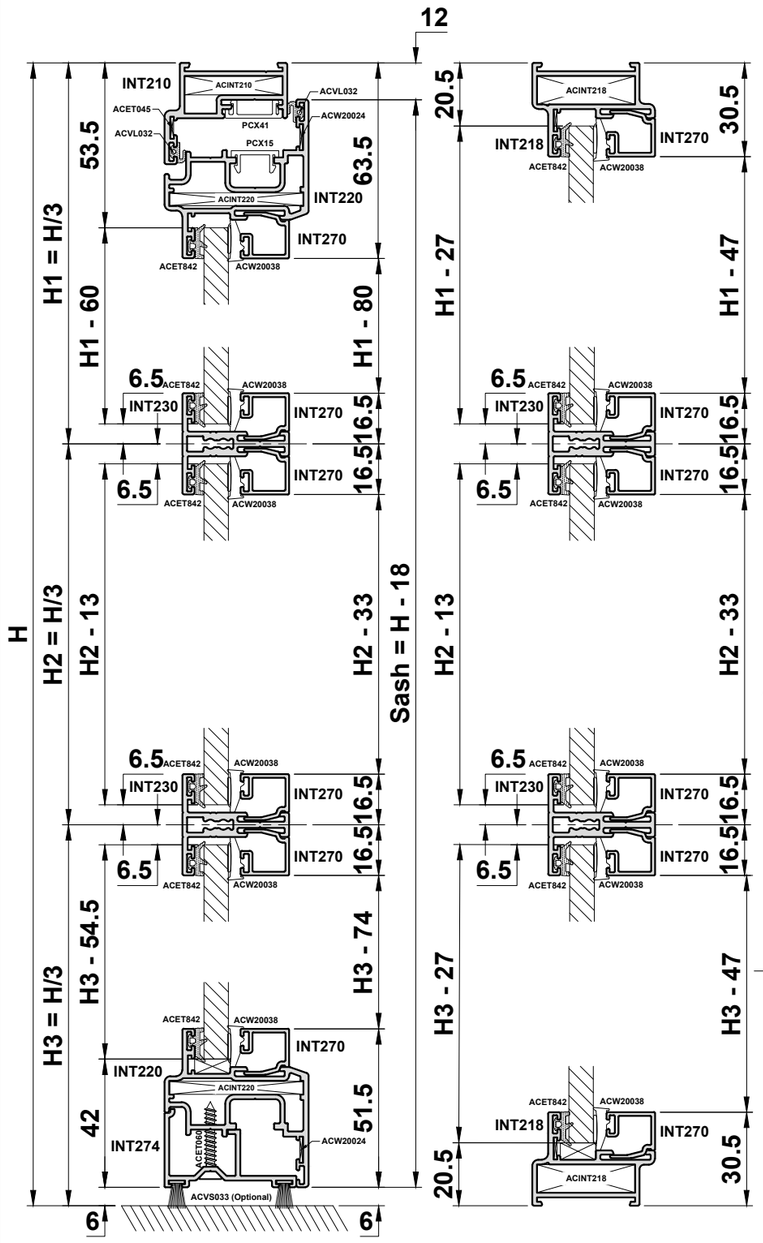

Profile Cutting Schedule			
INT210	1		W1 - 3
INT210	2		H
INT218	2		W2 - 3
INT218	2		H
INT220	2		W1 - 27
INT220	2		H - 18
INT230	2		W1 - 105
INT230	2		W2 - 39
INT238	1		H2 - 8
INT255	1		H
INT270	4		W1 - 105
INT270	2		W1 - 190
INT270	6		W2 - 39
INT270	2		H3 - 74
INT270	4		H2 - 33
INT270	2		H1 - 80
INT270	2		H3 - 47
INT270	2		H1 - 47
INT274	1		W1 - 64
PCX15	1		W1 - 75
PCX15	2		H - 55.5
PCX41	1		W1 - 39
PCX41	2		H - 12

Accessories		
ACET045	Chevrons	6
ACET060	Screws	300mm centres
ACET066	Screws	10
ACET067	Screws	16
ACET842	E Gasket	6(W1-110) + 2(H-101.5)
ACET842	E Gasket	6(W2-44) + 2(H-41)
ACINT210	Outer Frame Cleats	2
ACINT218	Outer Frame Cleats	4
ACINT220	Sash Cleats	4
ACINT221	Hinge Kit	3
ACINT230	Transom Brackets	6
ACINT237/238	Magnetic Sash Lock	1
ACINT239	Forend Cover	1
ACINT240	Striker Cover Plate	1
ACINT241	Latch Cover Tray with magnet	1
ACINT274	End Cap	Pair
ACINT5__	Lever Handle (*)	Pair
ACUN3547	M4 Connecting Screws	6
ACVL032	Outer Frame Seal	1(W/2-61) + 2(H-29)
ACVL032	Sash Seal	2(W/2-35) + 2(H-18)
ACVS033	Woolpile	2(W1-64)
ACW20024	Chevrons	4
ACW20038	Wedge Gasket	6(W1-110) + 2(H-101.5)
ACW20038	Wedge Gasket	6(W2-44) + 2(H-41)

(*) See Section B for handle options.

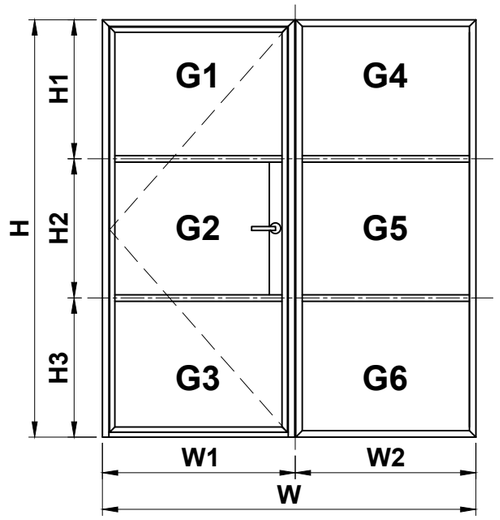

Glass		
G1	1	W1 - 110 X H1 - 60
G2	1	W1 - 195 X H2 - 13
G3	1	W1 - 110 X H3 - 54.5
G4	1	W2 - 44 X H1 - 27
G5	1	W2 - 44 X H2 - 13
G6	1	W2 - 44 X H3 - 27

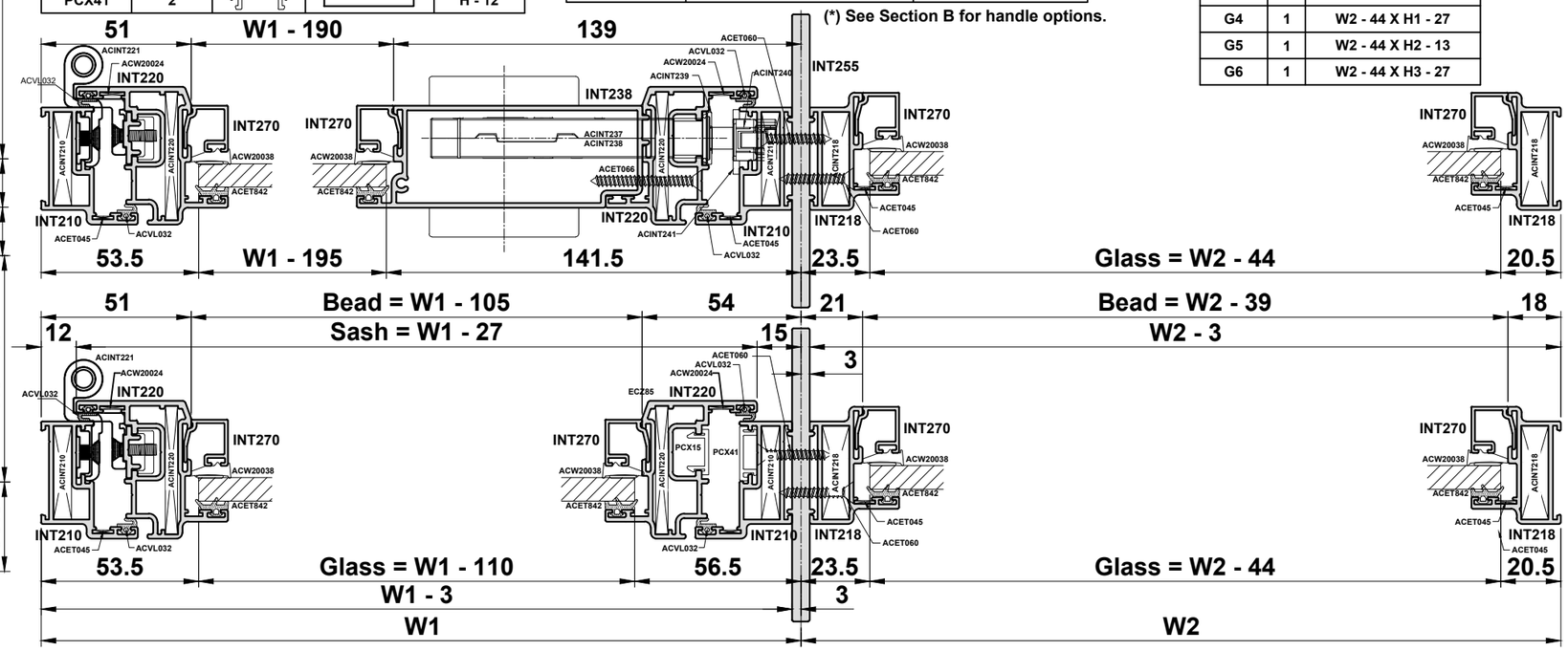

Do Not Scale From This Drawing

Cutting Information - Open In Double Door

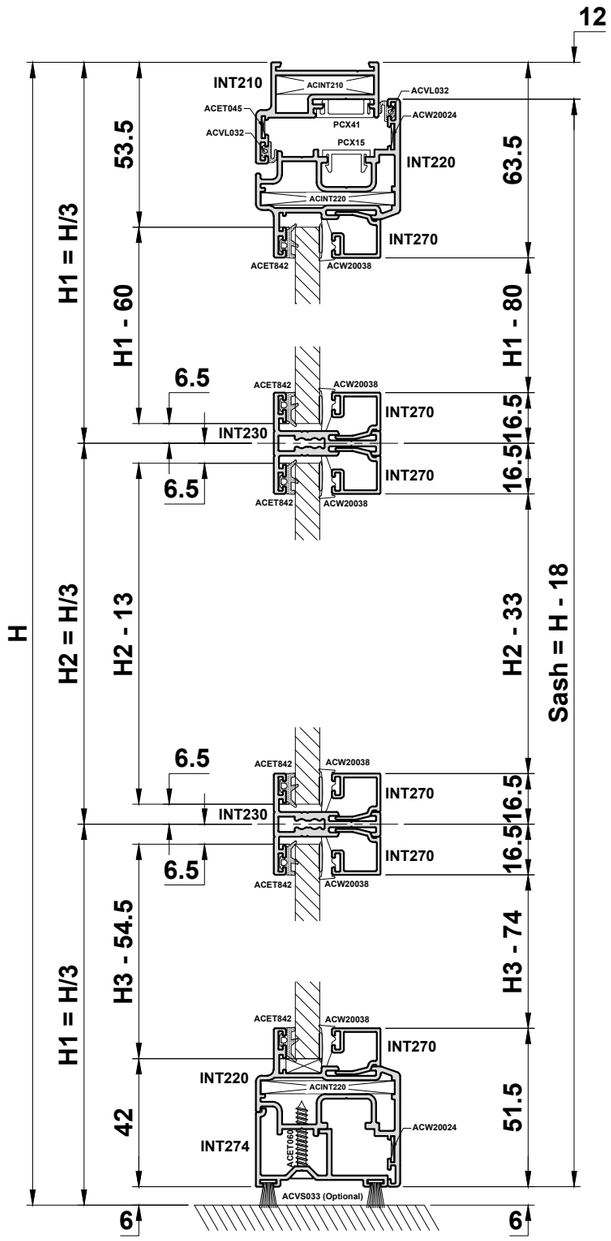

Profile Cutting Schedule		
INT210	1	W
INT210	2	H
INT220	4	W/2 - 15
INT220	4	H - 18
INT230	4	W/2 - 93
INT238	1	H2 - 8
INT249	1	H - 40.5
INT270	10	W/2 - 93
INT270	2	W/2 - 178
INT270	4	H3 - 74
INT270	4	H2 - 33
INT270	4	H1 - 80
INT274	2	W/2 - 52
PCX15	2	W/2 - 63
PCX15	3	H - 55.5
PCX41	1	W - 36
PCX41	2	H - 12

Accessories		
ACET045	Chevrons	2
ACET066	Screws	10
ACET067	Screws	16
ACET842	E Gasket	12(W/2-98) + 4(H-101.5)
ACINT210	Outer Frame Cleats	2
ACINT211	Packer	1
ACINT220	Sash Cleats	8
ACINT221	Hinge Kit	6
ACINT230	Transom Brackets	8
ACINT237/238	Magnetic Sash Lock	1
ACINT239	Forend Cover	1
ACINT240	Striker Cover Plate	1
ACINT241	Latch Cover Tray with magnet	1
ACINT249	Bottom End Cap	1
ACINT250	Top End Cap	1
ACINT25_	Flush Bolt (*)	2
ACINT274	End Cap	2 Pairs
ACINT5__	Lever Handle (**)	Pair
ACUN3512	Screws	300mm centres
ACUN3547	M4 Connecting Screws	8
ACVL032	Outer Frame Seal	1(W-58) + 2(H-29)
ACVL032	Sash Seal	4(W/2-23) + 4(H-12)
ACVS033	Woolpile	4(W/2-52)
ACW20024	Chevrons	8
ACW20038	Wedge Gasket	12(W/2-98) + 4(H-101.5)

(*) See Section B for flush bolt options.
(**) See Section B for handle options.

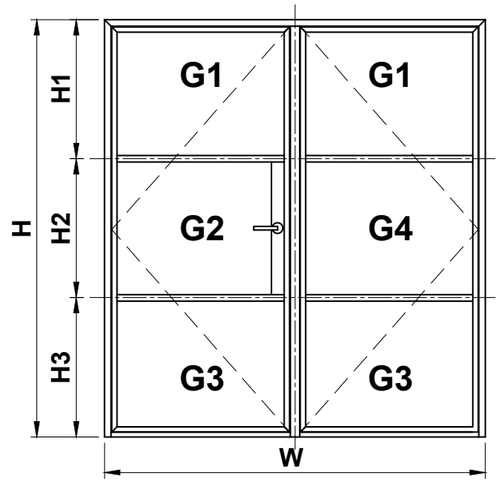

Glass		
G1	2	W/2 - 98 X H1 - 60
G2	1	W/2 - 183 X H2 - 13
G3	2	W/2 - 98 X H3 - 54.5
G4	1	W/2 - 98 X H2 - 13

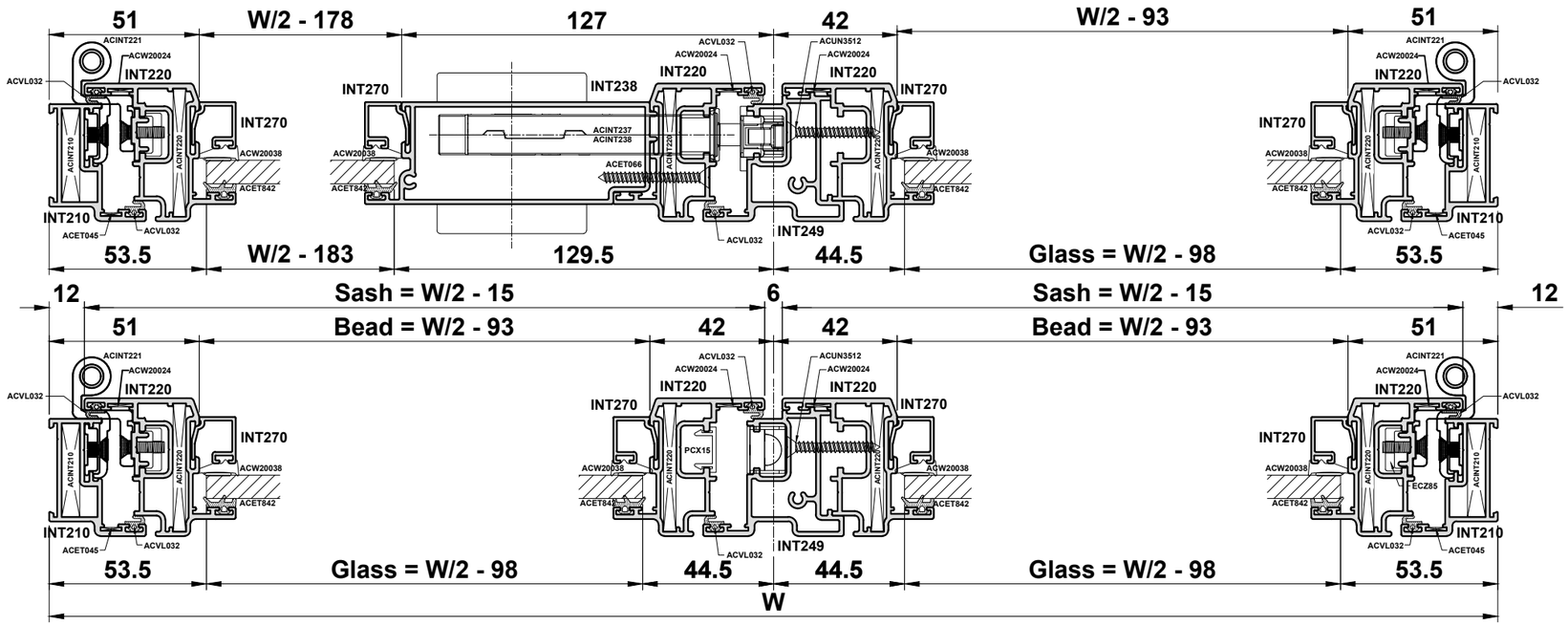

Do Not Scale From This Drawing

ISSUED: March 2025

Cutting Information - Single Sliding Door

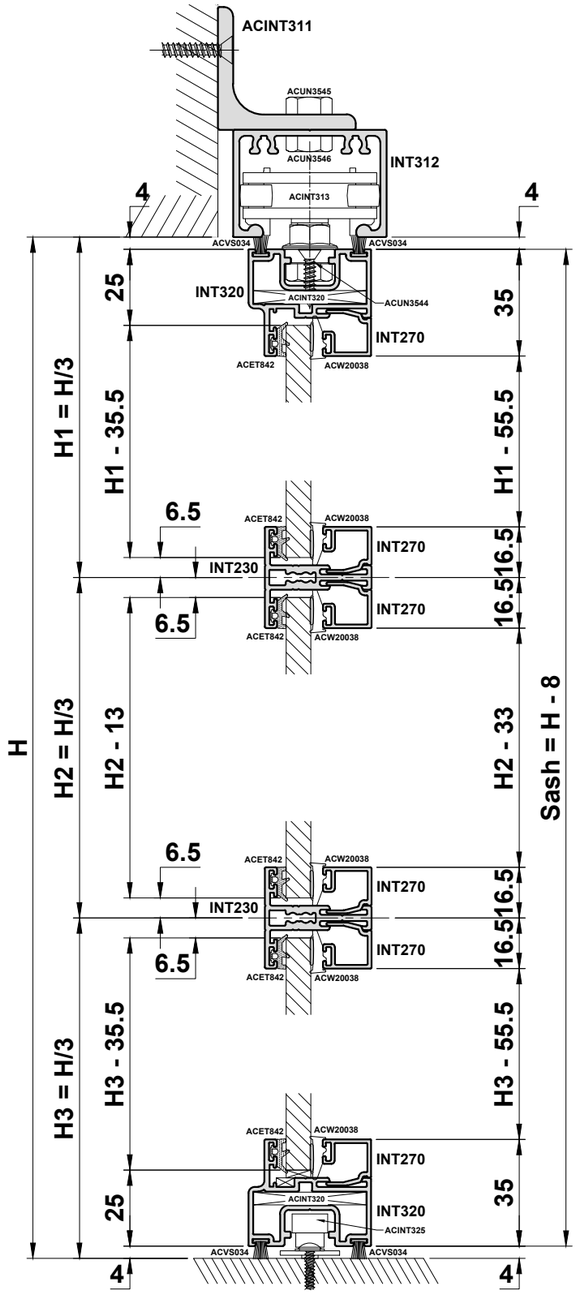

Profile Cutting Schedule				
INT230	2			W - 31
INT238	1			H2 - 8
INT270	4			W - 31
INT270	2			W - 115.5
INT270	2			H1 - 55.5
INT270	2			H2 - 33
INT270	2			H3 - 55.5
INT312	1			2(W + 20)
INT320	2			W + 14
INT320	2			H - 8
INT323	2			H - 8

Accessories		
ACET066	Screws	6
ACET067	Screws	8
ACET842	E Gasket	6(W-36) + 2(H-58)
ACINT230	Transom Bracket	4
ACINT311	Brackets	3
ACINT312	End Cap	1 Pack
ACINT313	Top Carrier Roller	2
ACINT314	Buffer Stop	2
ACINT320	Sash Cleats	4
ACINT325	Bottom Guide	1
ACINT52_	Pull Handle (*)	2
ACUN3544	Screws	300mm centres
ACUN3545	M8 Screws	2
ACUN3546	M8 Nuts	2
ACUN3547	M4 Connecting Screws	4
ACVS034	Woolpile	4(W+14) + 2H
ACW20038	Wedge Gasket	6(W-36) + 2(H-58)

(*) See Section B for handle options.

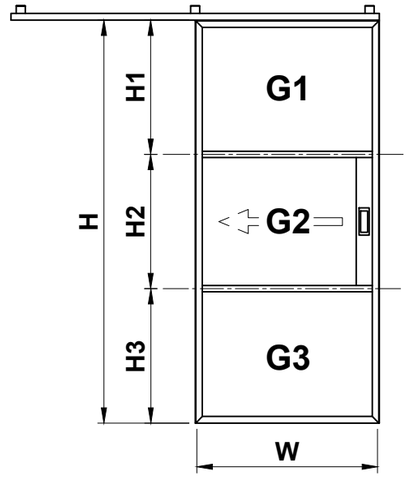

Glass		
G1	1	W - 36 X H1 - 35.5
G2	1	W - 120.5 X H2 - 13
G3	1	W - 36 X H3 - 35.5

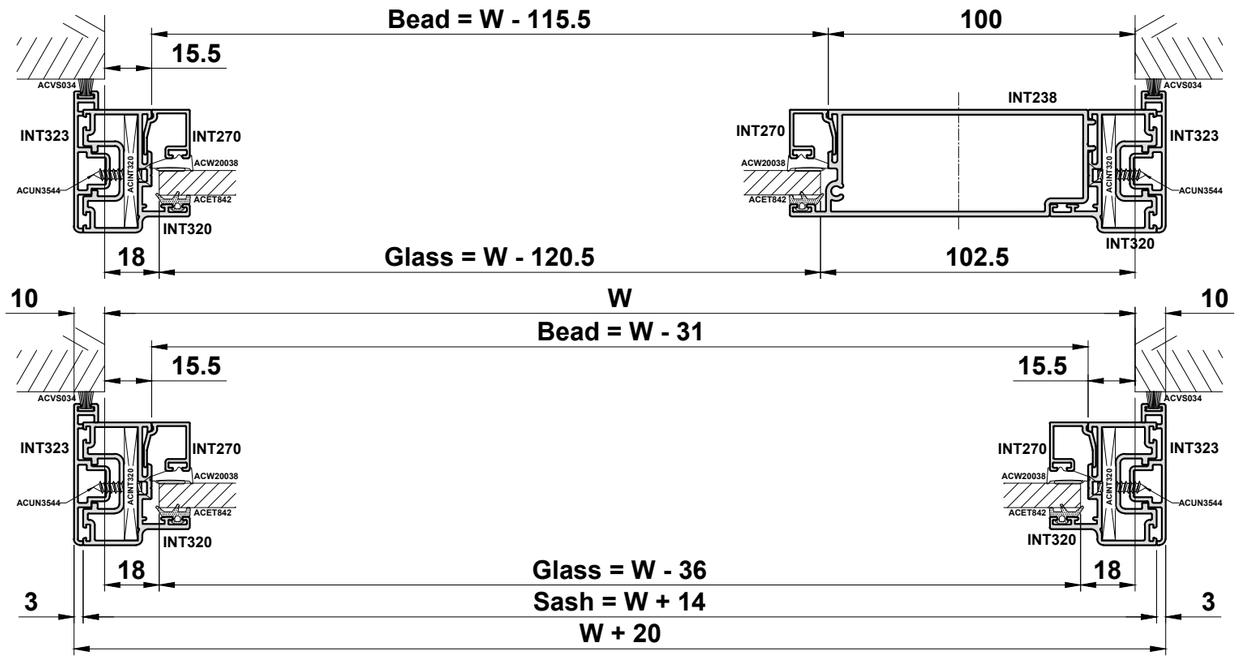

Do Not Scale From This Drawing

Cutting Information - Single Sliding Door & Fixed Screen

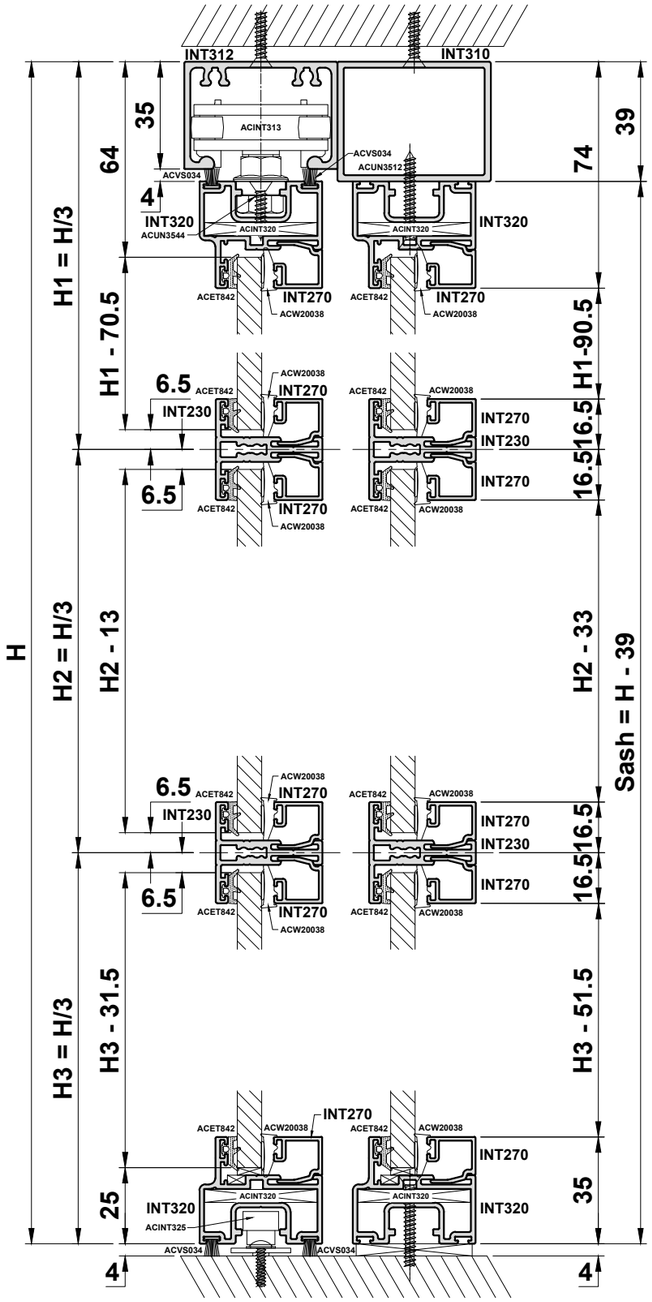

Profile Cutting Schedule		
INT230	2	W1 - 33
INT230	2	W2 - 34
INT238	1	H2 - 8
INT270	4	W1 - 33
INT270	2	W1 - 117.5
INT270	6	W2 - 34
INT270	4	H3 - 51.5
INT270	4	H2 - 33
INT270	4	H1 - 90.5
INT310	1	W
INT312	1	W
INT320	2	W1 + 12
INT320	2	W2 + 11
INT320	4	H - 39
INT322	1	H - 39
INT323	1	H - 39
PCX15	1	H - 39

Accessories		
ACET066	Screws	10
ACET067	Screws	16
ACET842	E Gasket	6(W1-38) + 2(H-98)
ACET842	E Gasket	6(W2-39) + 2(H-98)
ACINT230	Transom Bracket	8
ACINT312	End Cap	1 Pack
ACINT313	Top Carrier Roller	2
ACINT314	Buffer Stop	2
ACINT320	Sash Cleats	8
ACINT325	Bottom Guide	1
ACINT52_	Pull Handle	2
ACUN3544	Screws	300mm centres
ACUN3512	Screws	300mm centres
ACUN3547	M4 Connecting Screws	8
ACVS034	Woolpile	4(W1+12) + 4(H-40)
ACW20038	Wedge Gasket	6(W1-38) + 2(H-98)
ACW20038	Wedge Gasket	6(W2-39) + 2(H-98)

(*) See Section B for handle options.

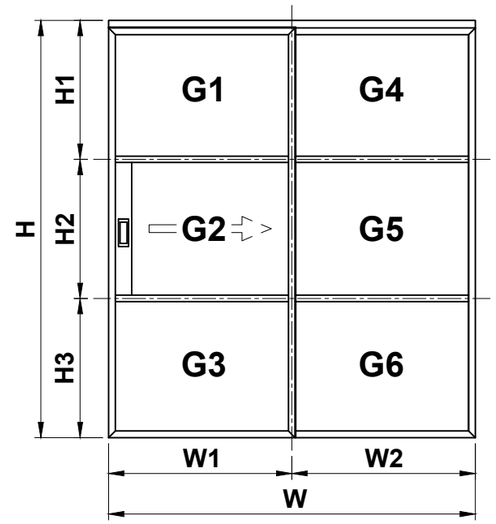

Glass						
G1	1	W1 - 38 X H1 - 70.5		G4	1	W2 - 39 X H1 - 70.5
G2	1	W1 - 122.5 X H2 - 13		G5	1	W2 - 39 X H2 - 13
G3	1	W1 - 38 X H3 - 31.5		G6	1	W2 - 39 X H3 - 31.5

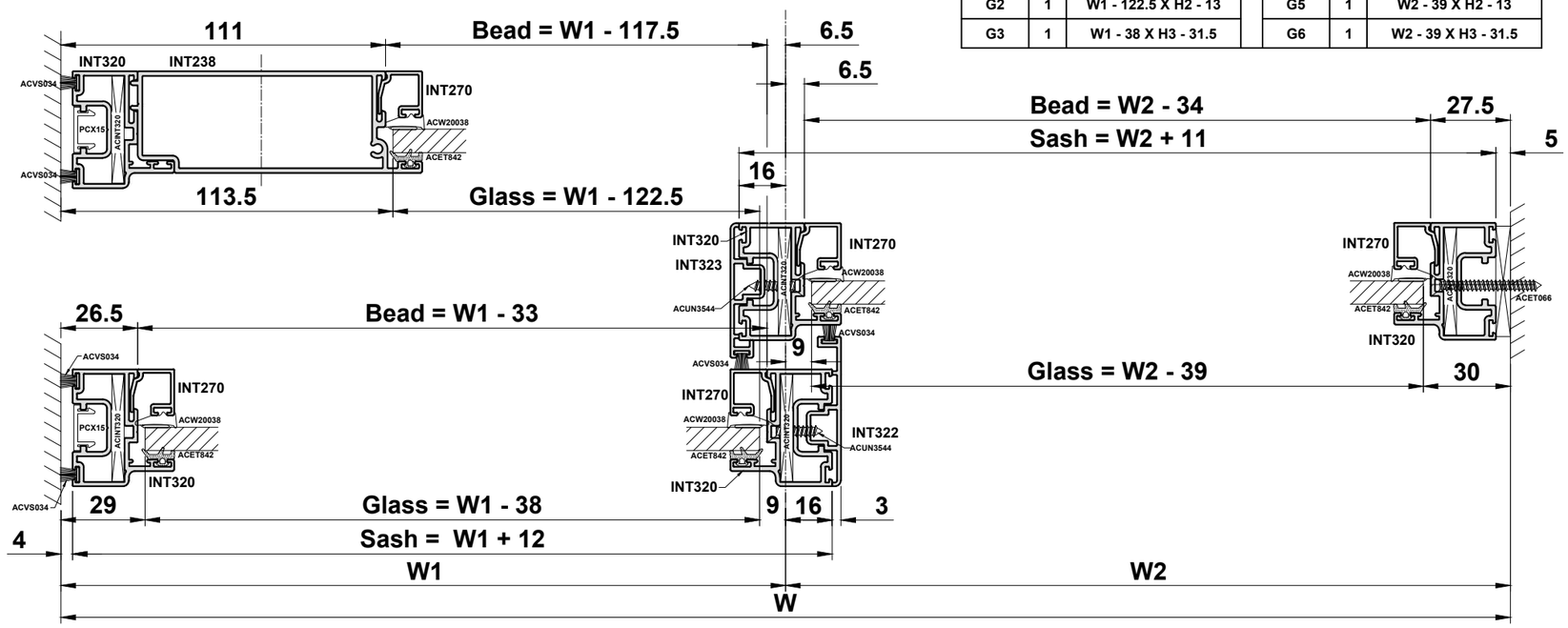

Do Not Scale From This Drawing

Cutting Information - Single Sliding Door & Fixed Screen

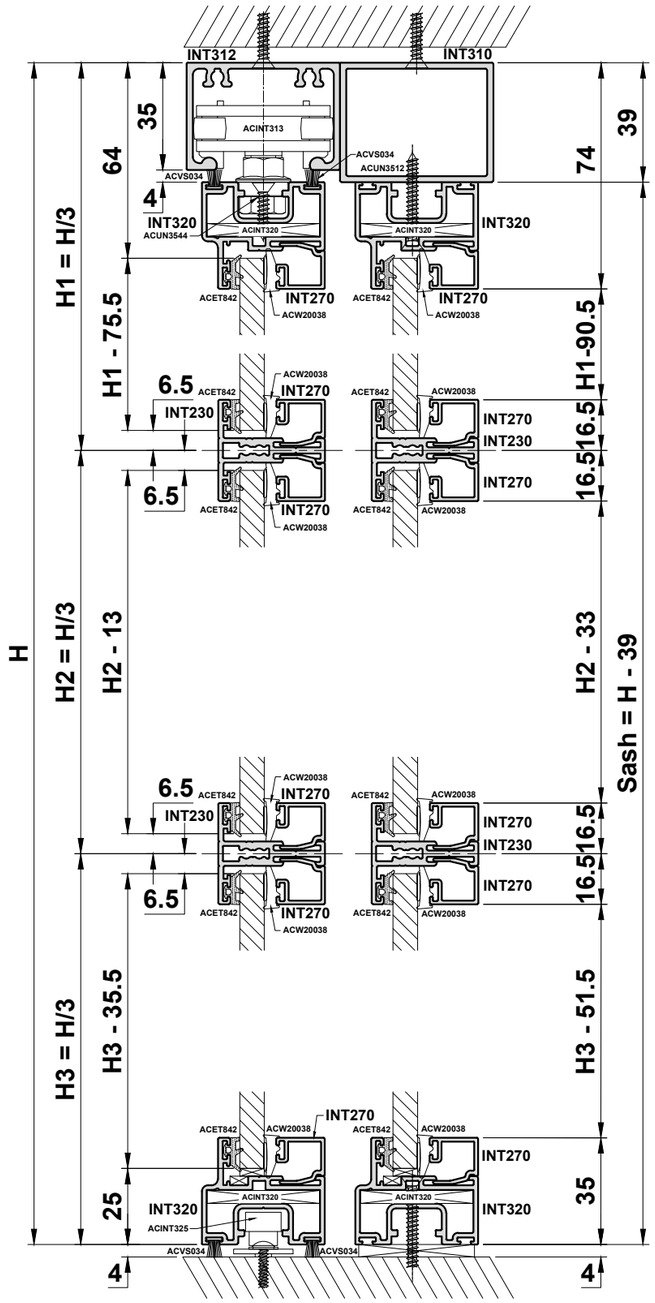

Profile Cutting Schedule		
INT230	2	W1 - 33
INT230	2	W2 - 29
INT230	2	W3 - 50
INT238	1	H2 - 8
INT270	4	W1 - 33
INT270	2	W1 - 117.5
INT270	6	W2 - 29
INT270	6	W3 - 50
INT270	6	H3 - 51.5
INT270	6	H2 - 33
INT270	6	H1 - 90.5
INT310	1	W
INT312	1	W
INT320	2	W1 + 12
INT320	2	W2 + 16
INT320	2	W3 - 5
INT320	6	H - 39
INT322	1	H - 39
INT323	1	H - 39
INT357	1	H - 39
PCX15	1	H - 39

Accessories		
ACET066	Screws	14
ACET067	Screws	24
ACET842	E Gasket	6(W1-38) + 2(H-98)
ACET842	E Gasket	6(W2-34) + 2(H-98)
ACET842	E Gasket	6(W3-55) + 2(H-98)
ACINT230	Transom Bracket	12
ACINT312	End Cap	1 Pack
ACINT313	Top Carrier Roller	2
ACINT314	Buffer Stop	2
ACINT320	Sash Cleats	12
ACINT325	Bottom Guide	1
ACINT52_	Pull Handle	2
ACUN3544	Screws	300mm centres
ACUN3512	Screws	300mm centres
ACUN3530	Screws	300mm centres
ACUN3547	M4 Connecting Screws	12
ACVS034	Woolpile	4(W1+12) + 4(H-40)
ACW20038	Wedge Gasket	6(W1-38) + 2(H-98)
ACW20038	Wedge Gasket	6(W2-34) + 2(H-98)
ACW20038	Wedge Gasket	6(W3-55) + 2(H-98)

(*) See Section B for handle options.

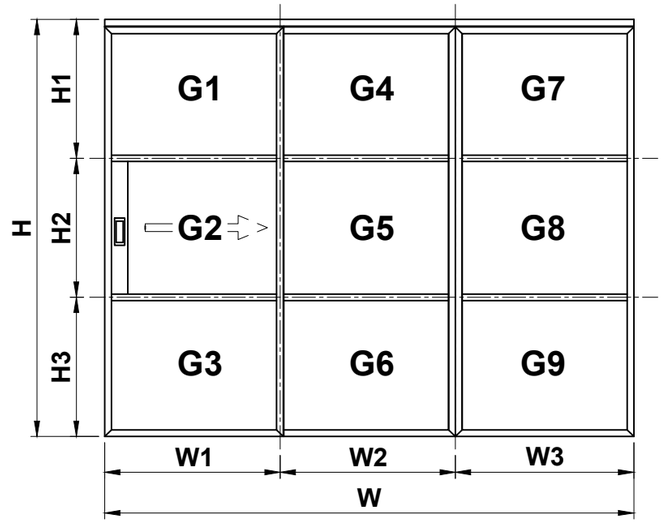

Glass											
G1	1	W1 - 38 X H1 - 70.5		G4	1	W2 - 34 X H1 - 70.5		G7	1	W3 - 55 X H1 - 70.5
G2	1	W1 - 122.5 X H2 - 13		G5	1	W2 - 34 X H2 - 13		G8	1	W3 - 55 X H2 - 13
G3	1	W1 - 38 X H3 - 31.5		G6	1	W2 - 34 X H3 - 31.5		G9	1	W3 - 55 X H3 - 31.5

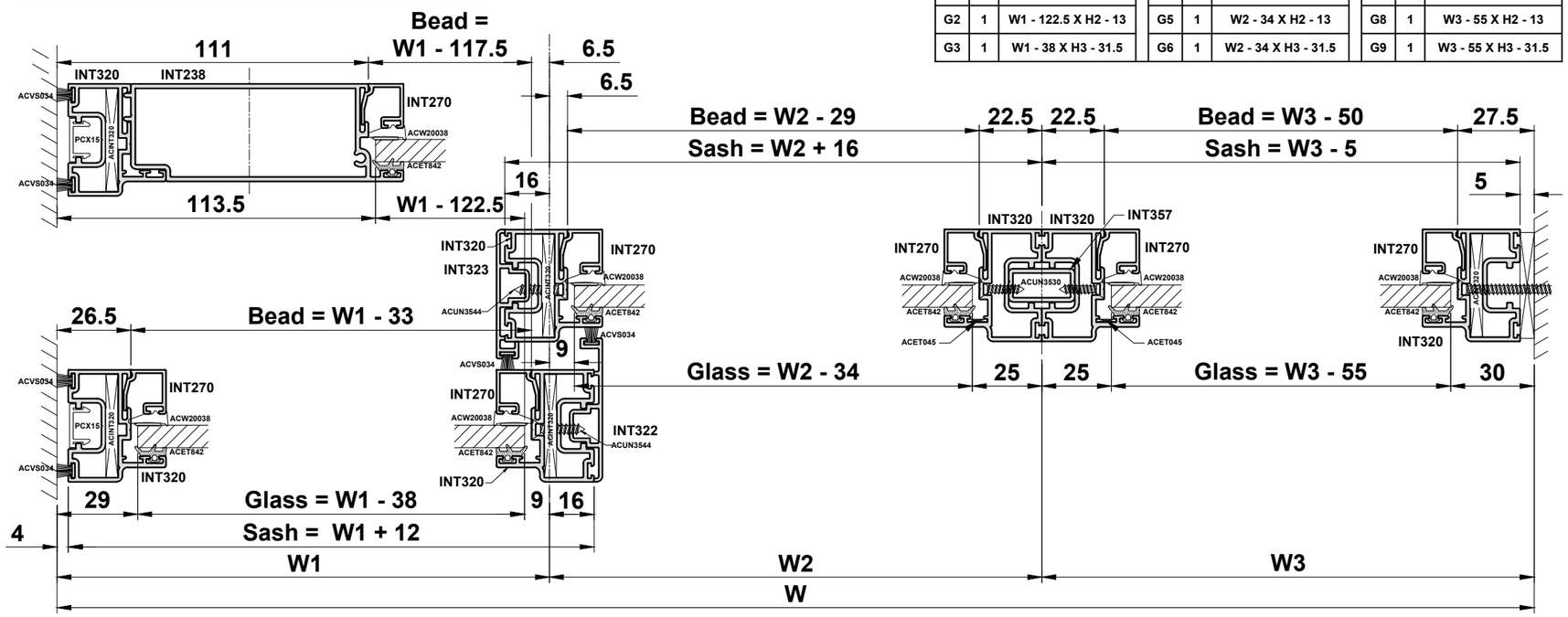

Do Not Scale From This Drawing

Cutting Information - Double Sliding Door

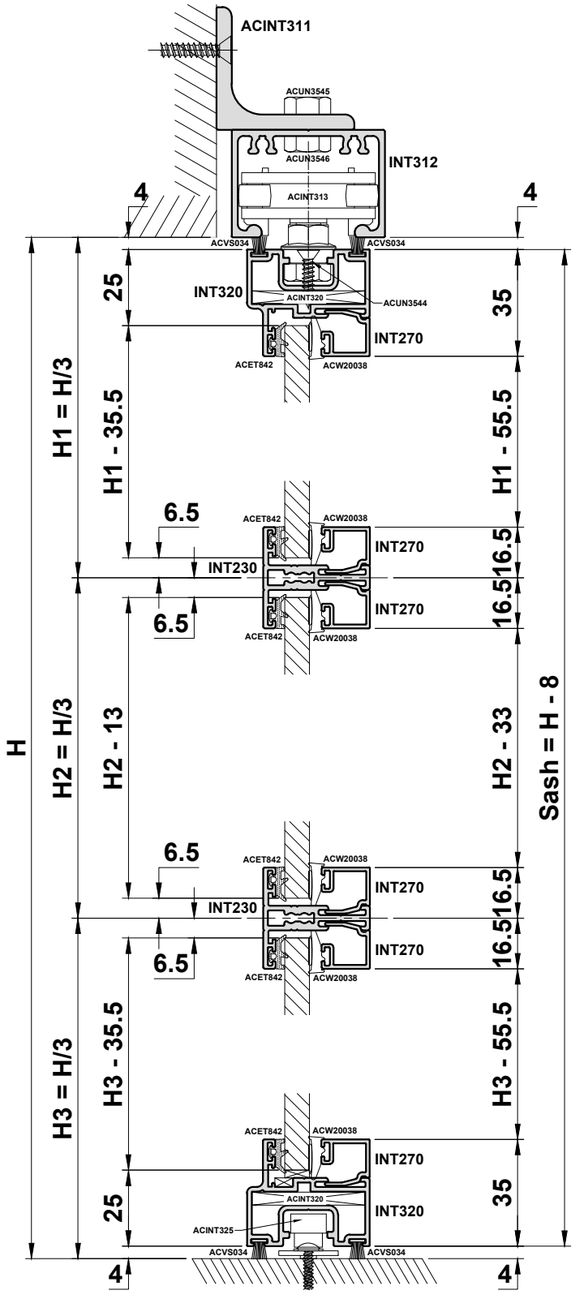

Profile Cutting Schedule		
INT230	4	W/2 - 40.5
INT238	2	H2 - 8
INT270	8	W/2 - 40.5
INT270	4	W/2 - 125.5
INT270	4	H3 - 55.5
INT270	4	H2 - 33
INT270	4	H1 - 55.5
INT312	1	2(W + 14)
INT320	4	W/2 + 4.5
INT320	4	H - 8
INT323	2	H - 8
PCX15	2	H - 8

Glass		
G1	2	W/2 - 45.5 X H1 - 35.5
G2	2	W/2 - 130.5 X H2 - 13
G3	2	W/2 - 45.5 X H3 - 35.5

Accessories		
ACET060	Screws	6
ACET066	Screws	12
ACET067	Screws	16
ACET842	E Gasket	12(W/2-40.5) + 4(H-58)
ACINT230	Transom Bracket	8
ACINT311	Brackets	3
ACINT312	End Cap	1 Pack
ACINT313	Top Carrier Roller	4
ACINT314	Buffer Stop	4
ACINT320	Sash Cleats	8
ACINT325	Bottom Guide	2
ACINT52_	Pull Handle (*)	4
ACUN3544	Screws	300mm centres
ACUN3545	M8 Screws	3
ACUN3546	M8 Nuts	3
ACUN3547	M4 Connecting Screws	8
ACVS034	Woolpile	8(W/2+4.5) + 6H
ACW20038	Wedge Gasket	12(W/2-40.5) + 4(H-58)

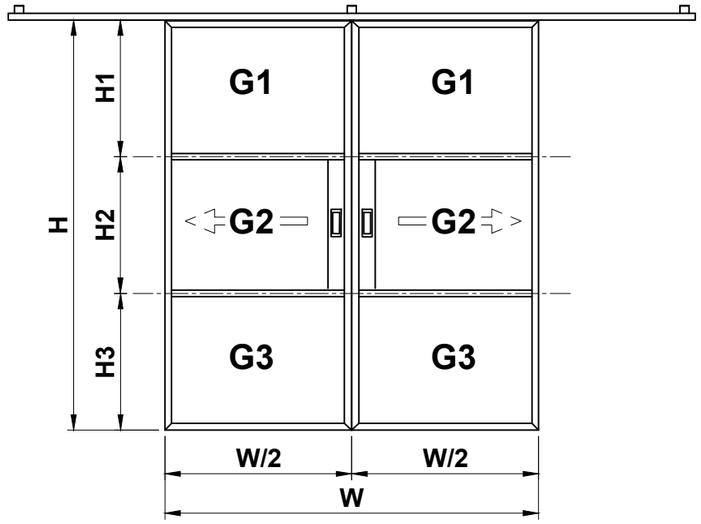

(*) See Section B for handle options.

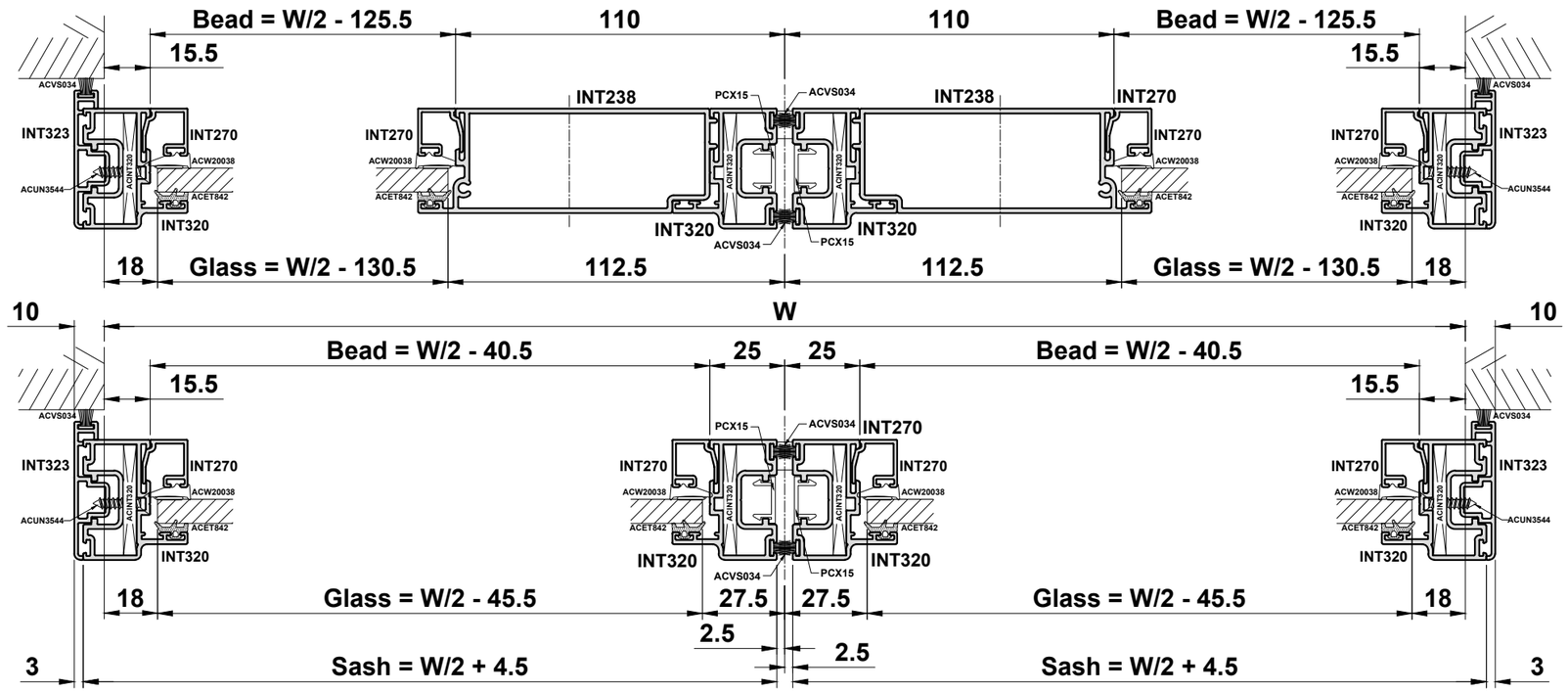

Do Not Scale From This Drawing

Cutting Information - Double Sliding Door & Double Fixed Screens

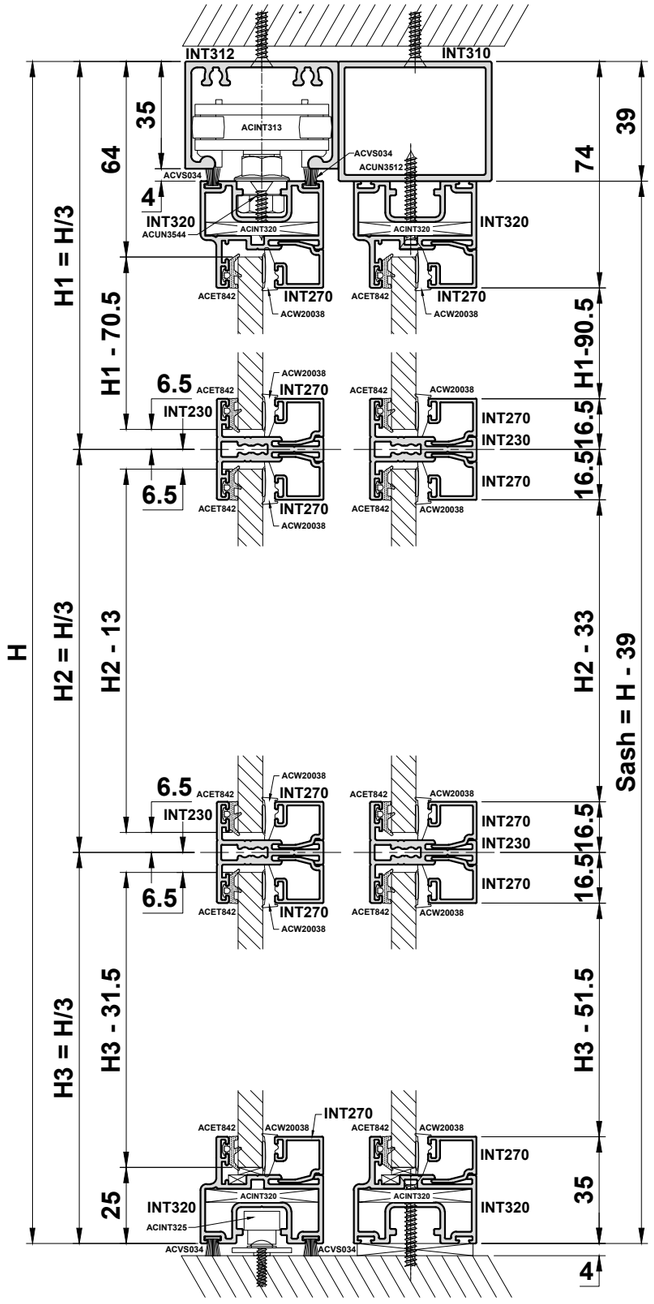

Profile Cutting Schedule				
INT230	8			W/4 - 30
INT238	2			H2 - 8
INT270	20			W/4 - 30
INT270	4			W1 - 115
INT270	8			H3 - 51.5
INT270	8			H2 - 33
INT270	8			H1 - 90.5
INT310	1			W
INT312	1			W
INT320	8			W/4 + 15
INT320	8			H - 39
INT322	2			H - 39
INT323	2			H - 39
PCX15	2			H - 39

Accessories		
ACET066	Screws	20
ACET067	Screws	36
ACET842	E Gasket	24(W/4-33) + 24(H/3-119)
ACINT230	Transom Bracket	16
ACINT312	End Cap	1 Pack
ACINT313	Top Carrier Roller	4
ACINT314	Buffer Stop	4
ACINT320	Sash Cleats	16
ACINT325	Bottom Guide	2
ACINT52_	Pull Handle	4
ACUN3544	Screws	300mm centres
ACUN3512	Screws	300mm centres
ACUN3547	M4 Connecting Screws	16
ACVS034	Woolpile	8(W1+12) + 8(H-40)
ACW20038	Wedge Gasket	24(W/4-33) + 24(H/3-119)

(*) See Section B for handle options.

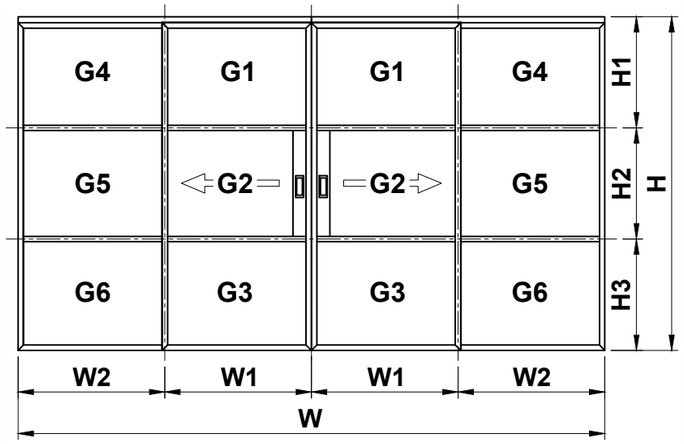

Glass						
G1	2	W/4 - 35 X H1 - 70.5		G4	2	W/4 - 35 X H1 - 70.5
G2	2	W/4 - 120 X H2 - 13		G5	2	W/4 - 35 X H2 - 13
G3	2	W/4 - 35 X H3 - 31.5		G6	2	W/4 - 35 X H3 - 31.5

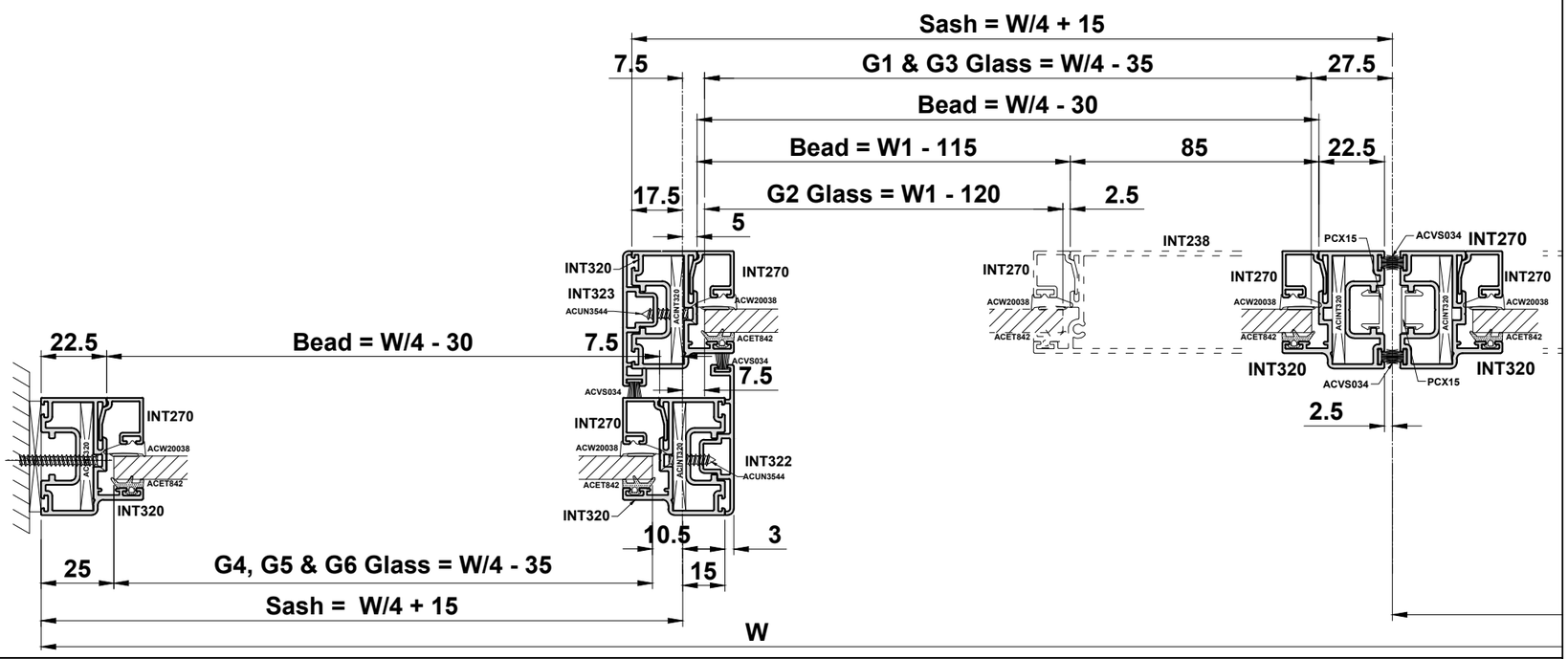

Do Not Scale From This Drawing

Cutting Information - Double Sliding Door & Double INT218 Fixed Screens

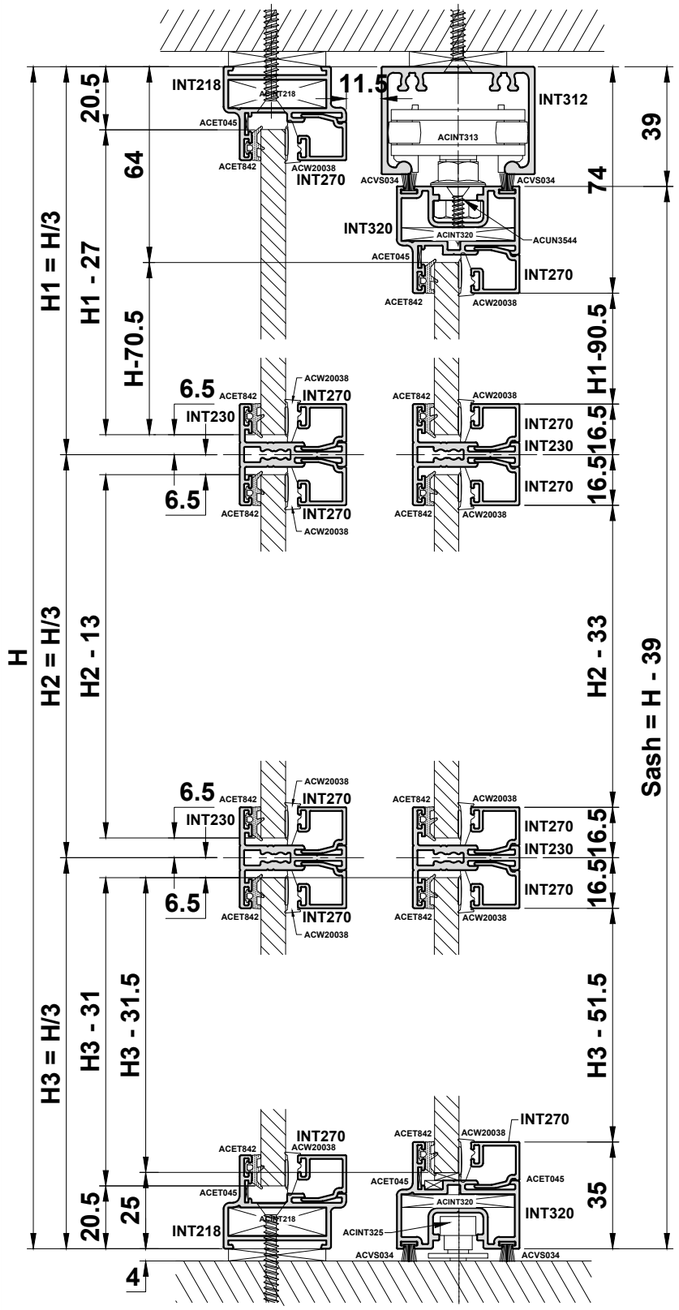

Profile Cutting Schedule				
INT218	4			W/4 + 8
INT218	4			H
INT230	8			W/4 - 28
INT238	2			H2 - 8
INT270	20			W/4 - 28
INT270	4			W/4 - 113
INT270	8			H3 - 51.5
INT270	8			H2 - 33
INT270	8			H1 - 90.5
INT312	1			W
INT320	8			W/4 + 17
INT320	8			H - 39
INT322	2			H - 39
INT324	2			H
PCX15	2			H - 39

Accessories		
ACET066	Screws	20
ACET067	Screws	36
ACET842	E Gasket	24(W/4-33) + 24(H/3-71)
INT218	INT218 Cleat	8
ACINT230	Transom Bracket	16
ACINT312	End Cap	1 Pack
ACINT313	Top Carrier Roller	4
ACINT314	Buffer Stop	4
ACINT320	Sash Cleats	8
ACINT325	Bottom Guide	2
ACINT52_	Pull Handle	4
ACUN3544	Screws	300mm centres
ACUN3512	Screws	300mm centres
ACUN3547	M4 Connecting Screws	16
ACVS033	Interlock Woolpile	4 x H
ACVS034	Woolpile	8(W/4+17) + 8(H-40)
ACW20038	Wedge Gasket	24(W/4-33) + 24(H/3-71)

(*) See Section B for handle options.

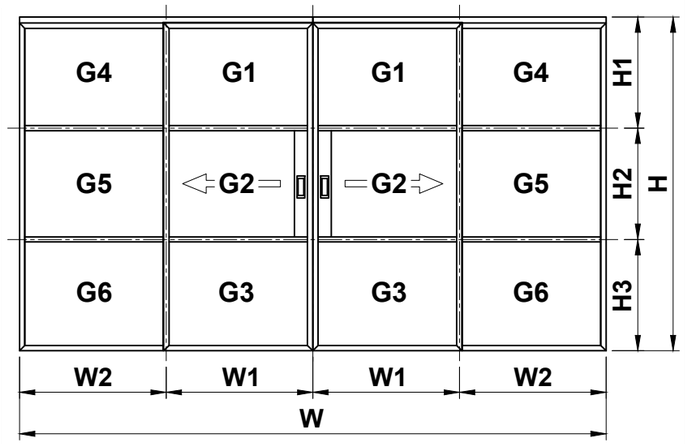

Glass						
G1	2	W/4 - 33 X H1 - 70.5		G4	2	W/4 - 33 X H1 - 27
G2	2	W/4 - 118 X H2 - 13		G5	2	W/4 - 33 X H2 - 13
G3	2	W/4 - 33 X H3 - 31.5		G6	2	W/4 - 33 X H3 - 31

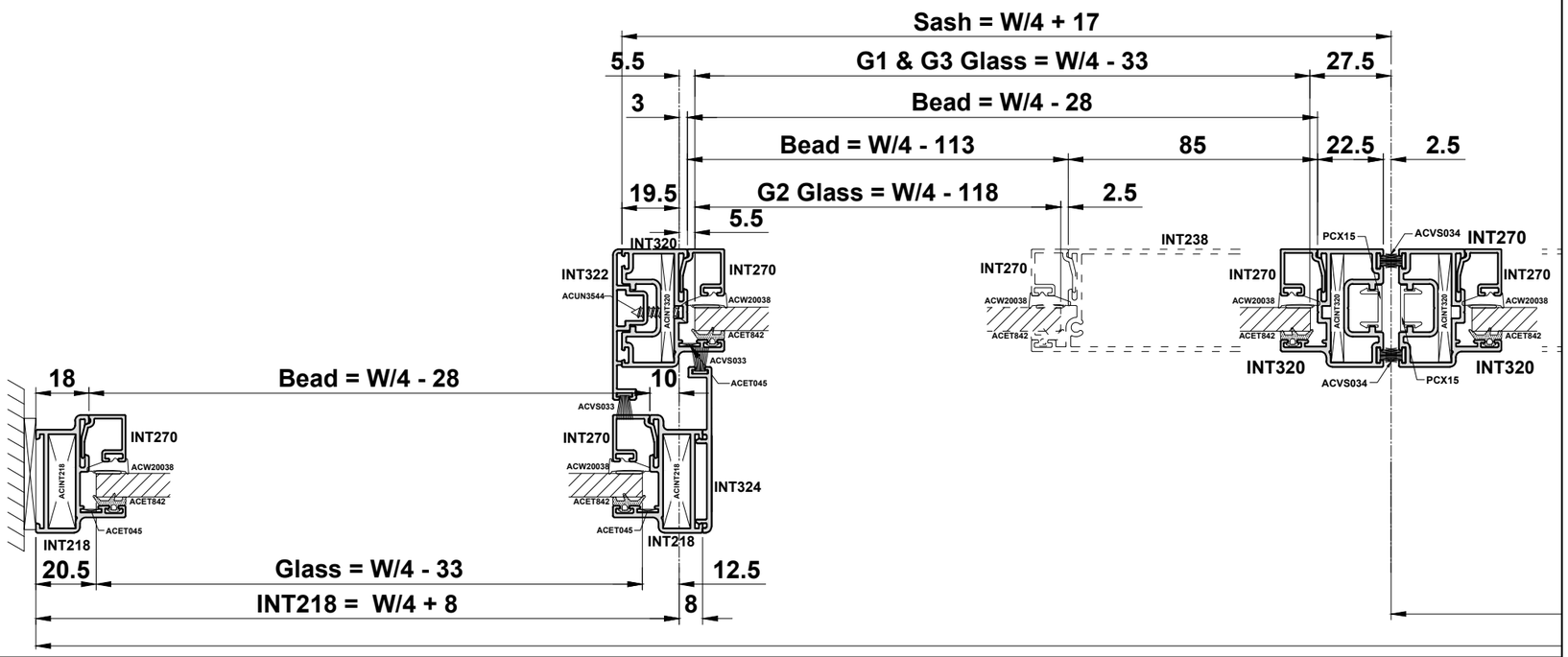

Cutting Information - Single Sliding Door with ACSIN510,511,512 System

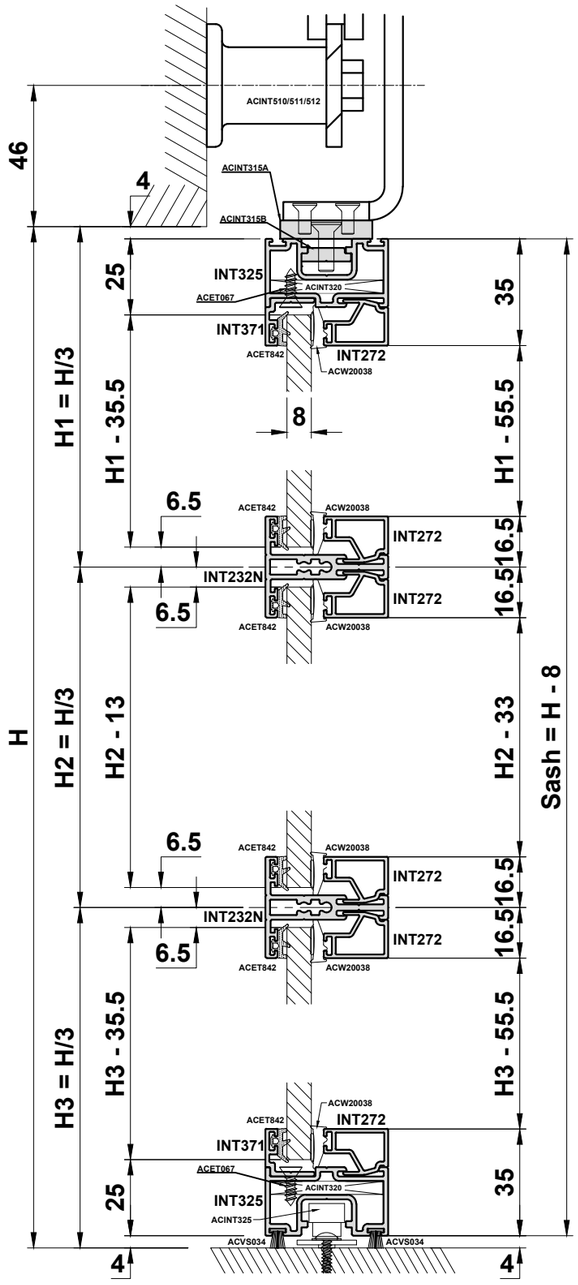

Profile Cutting Schedule				
INT232N	2			W - 31
INT338	1			H2 - 8
INT272	4			W - 31
INT272	2			W - 95
INT272	2			H1 - 55.5
INT272	2			H2 - 33
INT272	2			H3 - 55.5
INT371	2			W - 31
INT371	2			H1 - 55.5
INT371	1			H2 - 33
INT371	2			H3 - 55.5
INT325	2			W + 14
INT325	2			H - 8
INT323	2			H - 8

Accessories		
ACET066	Screws	6
ACET067	Screws	29
ACET842	E Gasket	6(W-36) + 2(H-58)
ACINT230	Transom Bracket	4
ACINT311	Brackets	3
ACINT312	End Cap	1 Pack
ACINT313	Top Carrier Roller	2
ACINT314	Buffer Stop	2
ACINT320	Sash Cleats	4
ACINT325	Bottom Guide	1
ACINT52_	Pull Handle (*)	2
ACUN3544	Screws	300mm centres
ACUN3545	M8 Screws	2
ACUN3546	M8 Nuts	2
ACUN3547	M4 Connecting Screws	4
ACVS034	Woolpile	4(W+14) + 2H
ACW20038	Wedge Gasket	6(W-36) + 2(H-58)

(*) See Section B for handle options.

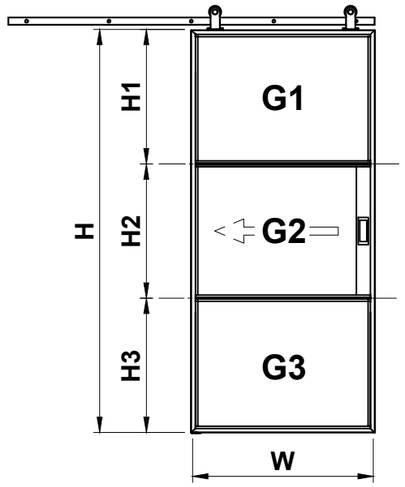

Glass		
G1	1	W - 36 X H1 - 35.5
G2	1	W - 120.5 X H2 - 13
G3	1	W - 36 X H3 - 35.5

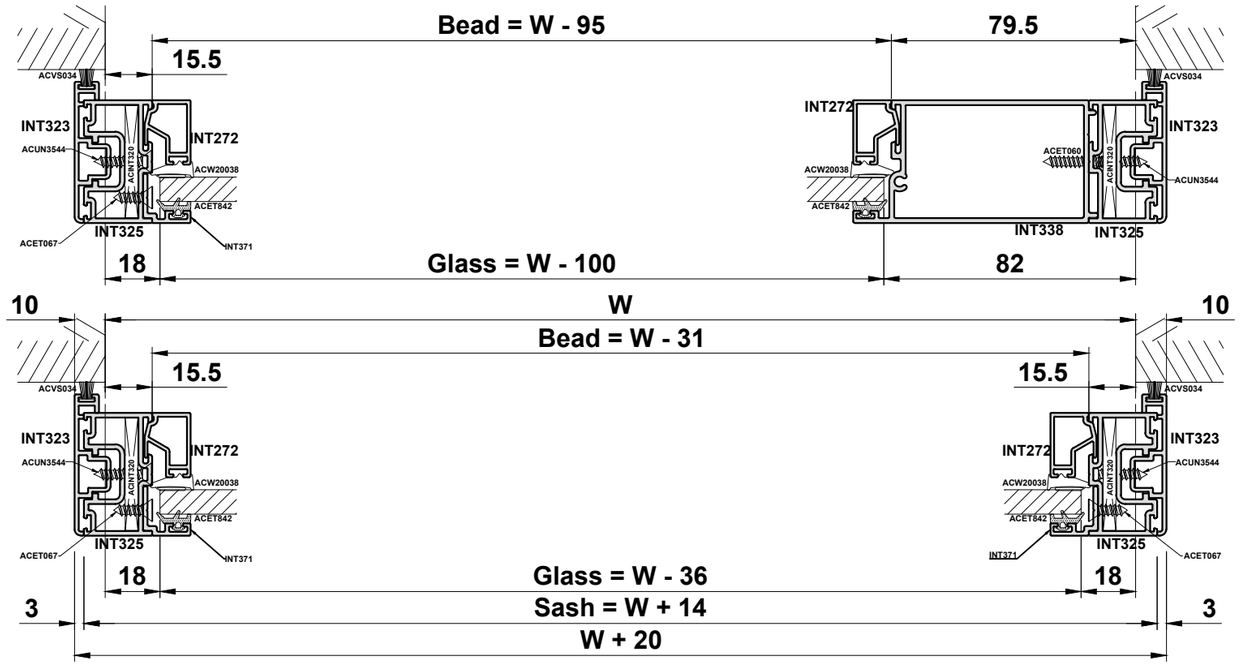

Cutting Information - Pivot Door

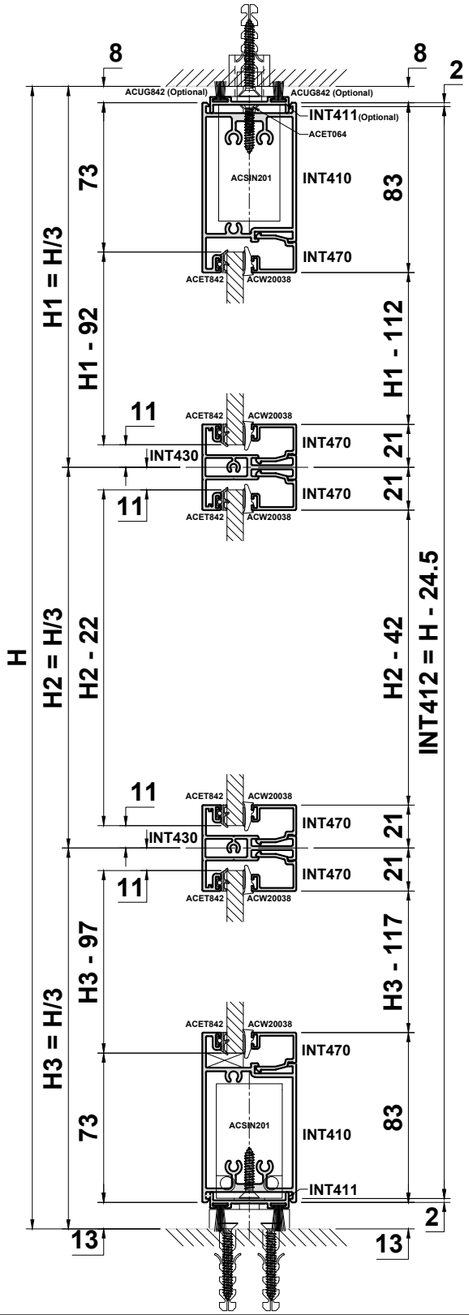

Profile Cutting Schedule				
INT410	2			W - 108
INT411	2 (**)			W - 108
INT412	2			H
INT413	2			H
INT420	2			H - 24.5
INT430	2			W - 108
INT438	1			H2 - 12
INT470	4			W - 108
INT470	2			W - 197.5
INT470	2			H3 - 117
INT470	2			H2 - 42
INT470	2			H1 - 112
INT471	2			H3 - 117
INT471	2			H2 - 42
INT471	2			H1 - 112
PCX15	2			H - 21
PCX41	2			H - 21

Accessories		
ACDR052	Screws	12
ACET064	Screws	300mm centres
ACET066	Screws	6
ACET067	Screws	8
ACET842	E Gasket	6(W-118) + 2(H-167)
ACINT237/238	Magnetic Sash Lock	1
ACINT239	Forend Cover	1
ACINT240	Striker Cover Plate	1
ACINT241	Latch Cover Tray with magnet	1
ACINT411	Woolpile	2(W - 108)
ACINT420	End Cap	2 Pairs
ACINT421	Block	1 Pack
ACINT430	Transom Bracket	4
ACINT5__	Lever Handle (*)	Pair
ACSIN201	Pivot System	1
ACUG842	Woolpile (**)	2(W - 108)
ACUN3530	Screws	300mm centres
ACUN3551	M4 Connecting Screws	4
ACVS034	Woolpile	2H
ACW20038	Wedge Gasket	6(W-118) + 2(H-167)

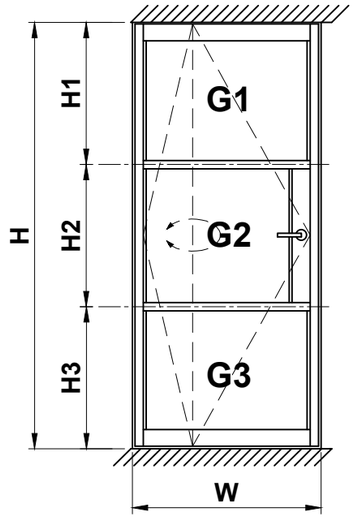

(*) See Section B for handle options.
(**) ACINT411 is optional on the top side as well as ACUG842)

Glass		
G1	1	W - 118 X H1 - 92
G2	1	W - 207.5 X H2 - 22
G3	1	W - 118 X H3 - 97

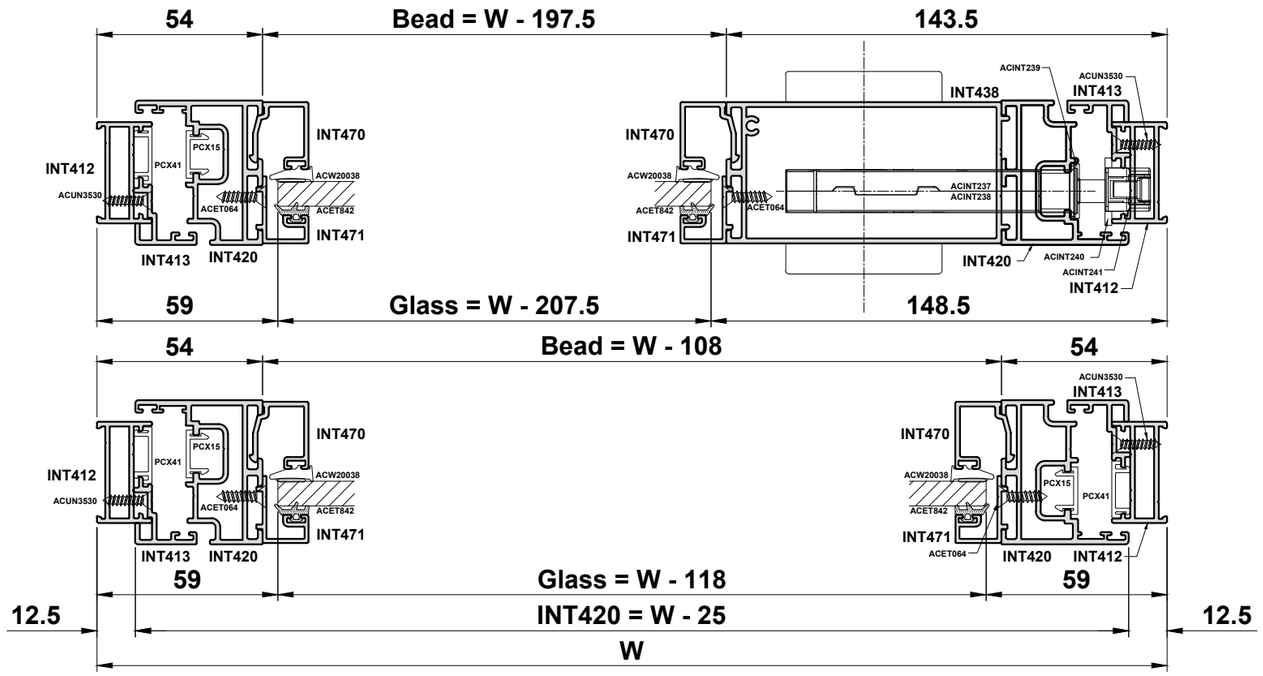

Cutting Information - Open In Double Door with Deep Bottom Rail

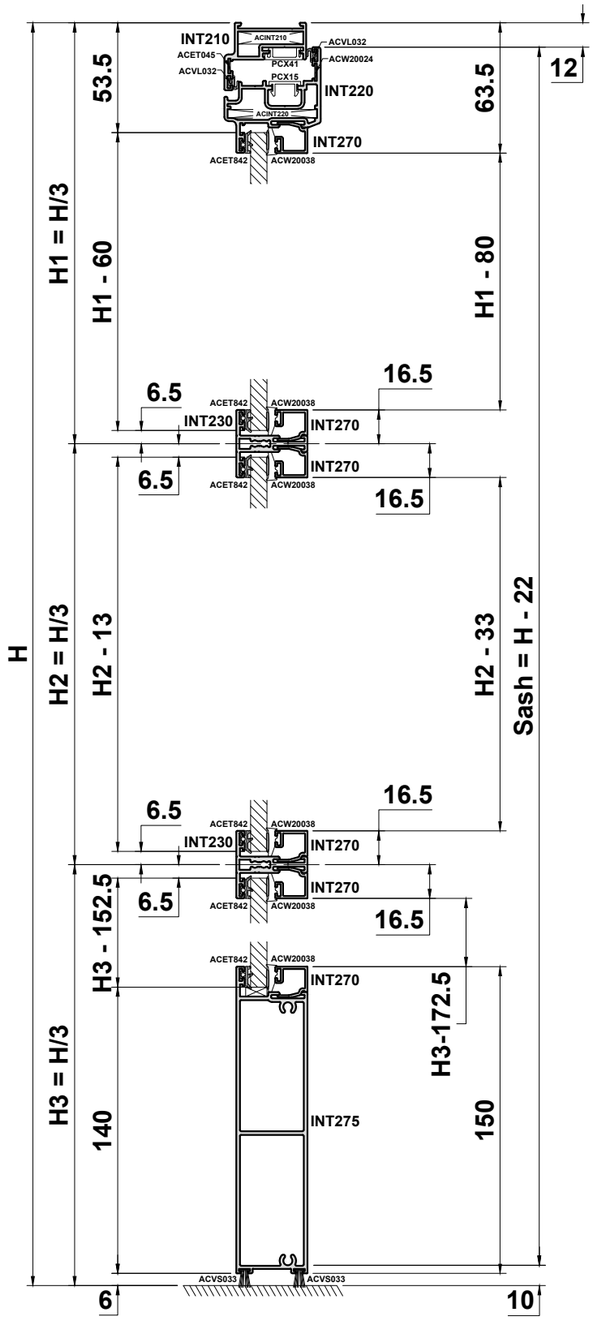

Profile Cutting Schedule				
INT210	1			W
INT210	2			H
INT220	2			W/2 - 15
INT220	4			H - 22
INT230	4			W/2 - 93
INT238	1			H2 - 8
INT249	1			H - 40.5
INT270	10			W/2 - 93
INT270	2			W/2 - 178
INT270	4			H3 - 172.5
INT270	4			H2 - 33
INT270	4			H1 - 80
INT275	2			W/2 - 93
PCX15	2			W/2 - 63
PCX15	3			H - 28.5
PCX41	1			W - 36
PCX41	2			H - 12

Accessories		
ACET045	Chevrons	2
ACET062	Screws	8
ACET066	Screws	10
ACET067	Screws	16
ACET842	E Gasket	12(W/2-98) + 4(H-199.5)
ACINT210	Outer Frame Cleats	2
ACINT211	Packer	1
ACINT220	Sash Cleats	4
ACINT221	Hinge Kit	6
ACINT223	End Cap	2 Pairs
ACINT224	Block	2 Packs
ACINT230	Transom Brackets	8
ACINT237/238	Magnetic Sash Lock	1
ACINT239	Forend Cover	1
ACINT240	Striker Cover Plate	1
ACINT241	Latch Cover Tray with magnet	1
ACINT249	Bottom End Cap	1
ACINT250	Top End Cap	1
ACINT25_	Flush Bolt (*)	2
ACINT5__	Lever Handle (**)	Pair
ACUN3512	Screws	300mm centres
ACUN3547	M4 Connecting Screws	8
ACVL032	Outer Frame Seal	1(W-58) + 2(H-29)
ACVL032	Sash Seal	4(W/2-23) + 4(H-18)
ACVS033	Woolpile	4(W/2-93)
ACW20024	Chevrons	4
ACW20038	Wedge Gasket	12(W/2-98) + 4(H-199.5)

(*) See Section B for flush bolt options.
(**) See Section B for handle options.

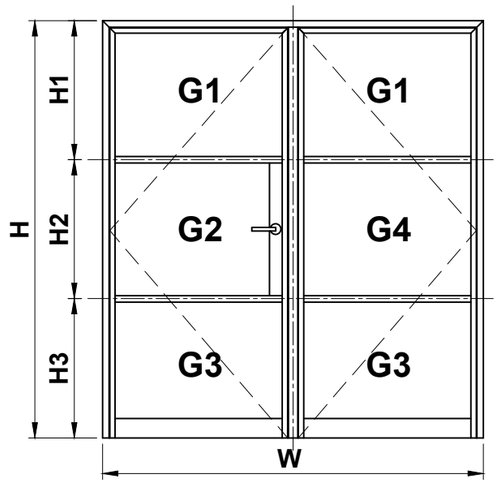

Glass		
G1	2	W/2 - 98 X H1 - 60
G2	1	W/2 - 183 X H2 - 13
G3	2	W/2 - 98 X H3 - 152.5
G4	1	W/2 - 98 X H2 - 13

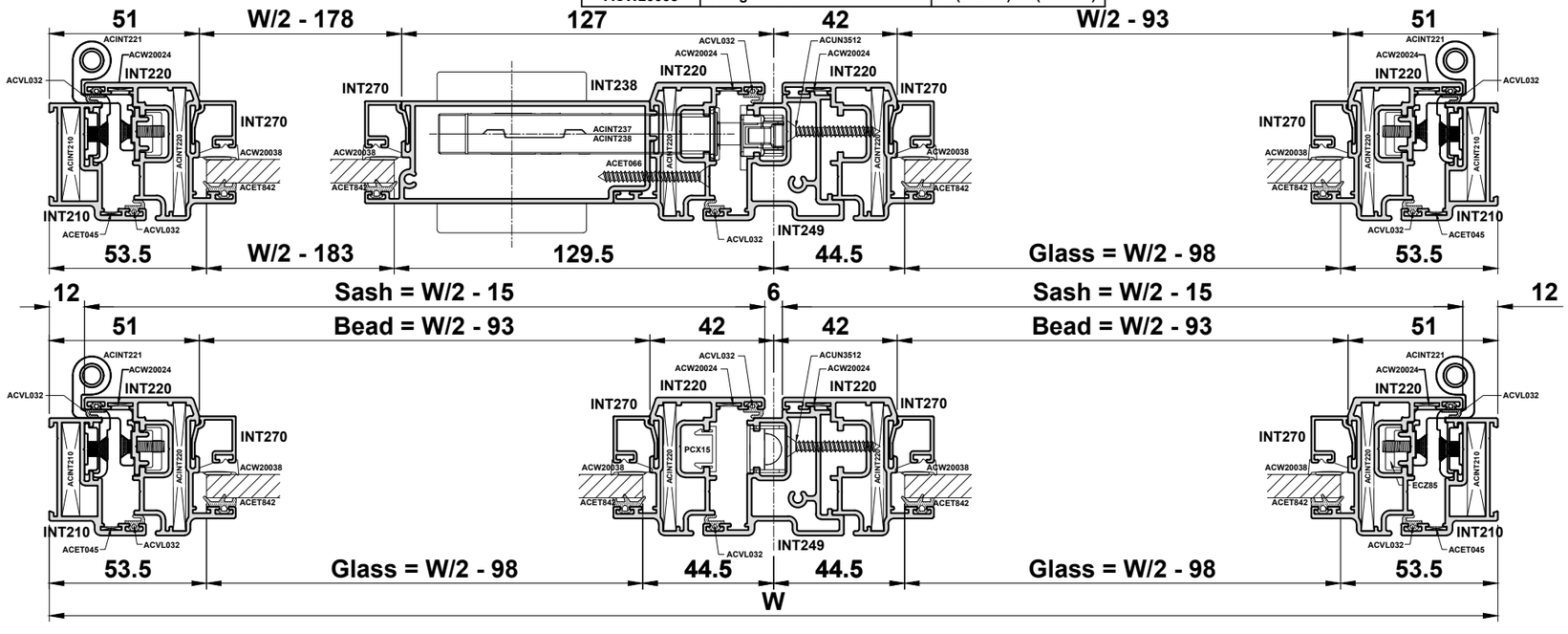

Cutting Information - Pivot Door & Fixed Screen

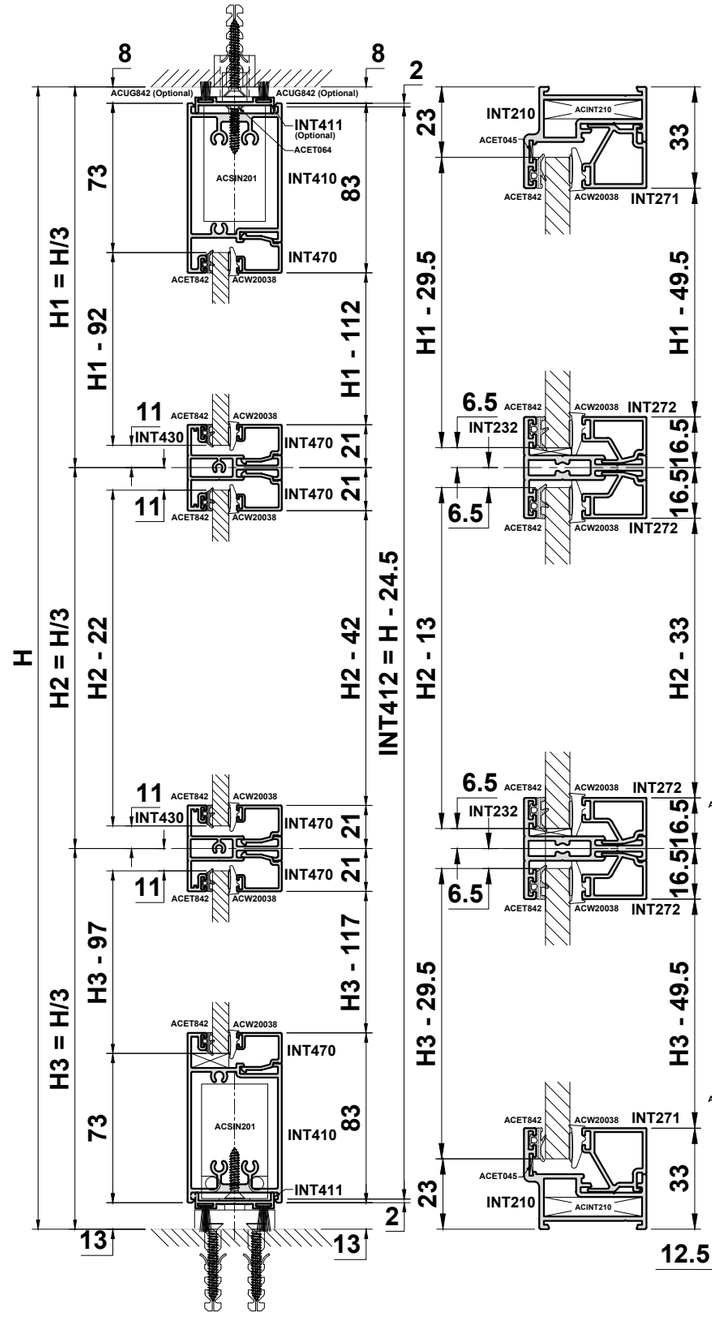

Profile Cutting Schedule		
INT210	2	W2 - 3
INT210	2	H
INT271	2	W2 - 39
INT271	2	H3 - 49.5
INT271	2	H2 - 33
INT271	2	H1 - 49.5
INT272	4	W2 - 39
INT410	2	W1 - 111
INT411	2 (**)	W1 - 111
INT412	2	H
INT413	2	H
INT420	2	H - 24.5
INT430	2	W1- 111
INT438	1	H2 - 12
INT470	4	W1 - 111
INT470	2	W1 - 200.5
INT470	2	H3 - 117
INT470	2	H2 - 42
INT470	2	H1 - 112
INT471	2	H3 - 117
INT471	2	H2 - 42
INT471	2	H1 - 112
PCX15	2	H - 21
PCX41	2	H - 21

Accessories		
ACDR052	Screws	12
ACET045	Chevrons	4
ACET060	Screws	300mm centres
ACET064	Screws	300mm centres
ACET066	Screws	10
ACET067	Screws	16
ACET842	E Gasket	6(W1-121) + 2(H-167)
ACET842	E Gasket	6(W2-44) + 2(H-46)
ACINT210	Outer Frame Cleats	4
ACINT232	Transom Bracket	4
ACINT237/238	Magnetic Sash Lock	1
ACINT239	Forend Cover	1
ACINT240	Striker Cover Plate	1
ACINT241	Latch Cover Tray with magnet	1
ACINT411	Woolpile	2(W1 - 111)
ACINT420	End Cap	2 Pairs
ACINT421	Block	1 Pack
ACINT430	Transom Bracket	4
ACINT5__	Lever Handle (*)	Pair
ACSIN201	Pivot System	1
ACUG842	Woolpile (**)	2(W1- 111)
ACUN3530	Screws	300mm centres
ACUN3547	M4 Connecting Screws	4

(*) See Section B for handle options.
(**) ACINT411 is optional on the top side as well as ACUG842)

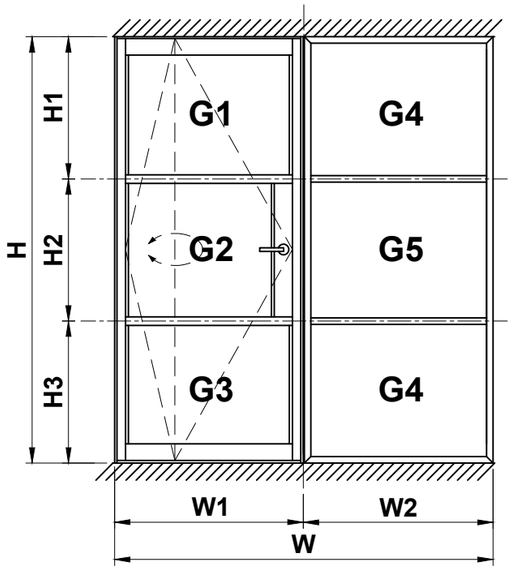

Accessories		
ACUN3551	M4 Connecting Screws	4
ACVS034	Woolpile	2H
ACW20038	Wedge Gasket	6(W1-121) + 2(H-167)
ACW20038	Wedge Gasket	6(W2-44) + 2(H-46)

Glass						
G1	1	W1 - 121 X H1 - 92		G4	2	W2 - 44 X H1 - 29.5
G2	1	W1 - 210.5 X H2 - 22		G5	1	W2 - 44 X H2 - 13
G3	1	W1 - 121 X H3 - 97				

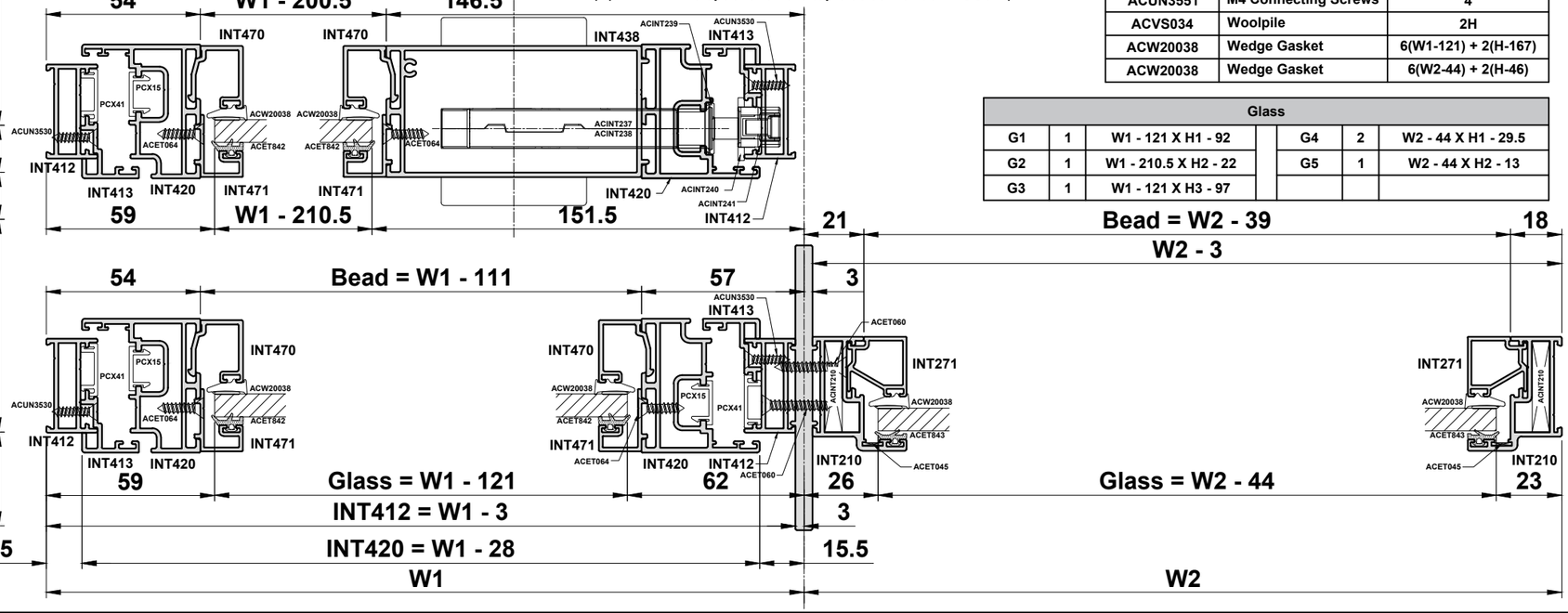

Cutting Information - Pivot Door & Fixed Screen

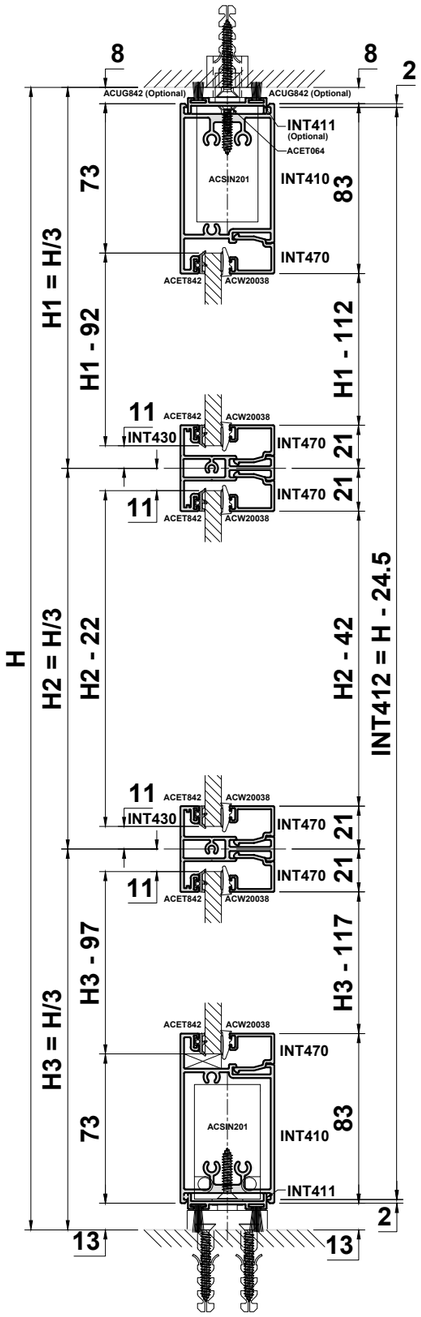

Profile Cutting Schedule		
INT410	2	W - 50
INT411	2 (**)	W - 50
INT418	2	H - 24.5
INT430	2	W - 50
INT438	1	H2 - 12
INT470	4	W - 50
INT470	2	W - 139.5
INT470	2	H3 - 117
INT470	2	H2 - 42
INT470	2	H1 - 112
INT471	2	H3 - 117
INT471	2	H2 - 42
INT471	2	H1 - 112
PCX15	2	H - 21
PCX41	2	H - 21

Accessories		
ACET062	Screws	12
ACET064	Screws	300mm centres
ACET842	E Gasket	4(W-80) + 4(H-112)
ACET842	E Gasket	2(W-169) + 2(H-42)
ACINT237/238	Magnetic Sash Lock	1
ACINT239	Forend Cover	1
ACINT240	Striker Cover Plate	1
ACINT241	Latch Cover Tray with magnet	1
ACINT411	Woolpile	2(W)
ACINT418	End Cap	2 Pairs
ACINT419	Block	1 Pack
ACINT430	Transom Bracket	4
ACSIN201	Pivot System	1
ACVS034	Woolpile (**)	4H

(*) See Section B for handle options.
(**) ACINT411 is optional on the top side as well as ACUG842)

Glass		
G1	1	W - 60 X H1 - 92
G2	1	W - 149.5 X H2 - 22
G3	1	W - 60 X H3 - 97