Main Index

Updates

DATE	PAGE	DESCRIPTION
January 2024	A07, A11, B11, C05, C11, C14, C17, F07, F08, F09, F10	ETC4014 long leg outer frame and ACET619 foam added.
May 2024	Throughout	ACET4012 replaced with ACET4110
June 2025	Throughout	Added New Profiles: ETC4016, ETC4018, ETC4028, ETC4036, ECT4079

Specification

GENERAL DESCRIPTION

The "Alitherm 400 Tilt & Turn" window system described in this manual is suitable for both replacement windows for existing buildings, and for installation into new buildings.

The system incorporates internally beaded fixed lights & sashes.

The low line gaskets and extended polyamide thermal breaks help to provide excellent U Values and Window Energy Rating capable of achieving an 'A' Rating when used in conjunction with the correct double glazed unit.

Alitherm 400 Tilt & Turn Quick-Glaze beads with integrated gasket, providing a fast and efficient glazing process. Non integrated gasket options are also available.

PROFILE SPECIFICATION

The window frame are constructed of aluminium alloy extrusion to BS EN 755-9 and BS EN 12020, extruded to 6063 T6 alloy. The internal and external extrusions are separated with a polyamide thermal break.

The external aluminium alloy extrusion is pre-treated and finished either:-

a) Anodised to BS 3987: 1987, grade AA25 to a natural self colour.

b) Polyester powder organic coating to BS 6496. Dual colour is available.

GENERAL MANUFACTURING

Outer and vent frames are made by cutting the frame profiles with accurate 45° mitred ends using Tungsten Carbide Tipped Saw Blades, operating at approximately 3000 rpm.

The corners are joined using the Alitherm 400 Tilt & Turn crimping cleats to form a cold forged corner joint (made by deforming small slugs of metal into the groove of the corner cleat).

The ends of transoms and mullions are profiled to fit the frame and fixed using self-tapping screws with a small joint sealant.

On polyester powder coated finishes, great care should be taken to avoid getting gap sealer on visible surfaces and should be removed as soon as possible with a clean cloth.

Care should be exercised when using products not supplied by Smart Systems Ltd as no responsibility can be accepted.

Specification

WINDOW DRAINAGE

As with all dry glazed systems, it is recommended that the window system is adequately drained and ventilated. Refer to drainage details in manual, if in doubt ask The Technical Department.

OUTER FRAME MANUFACTURING INFORMATION

The outer frame members are cut with 45° mitred ends to the overall size required, measured to the longest point of the metal.

Prior to corner crimping the centre line position of any transoms or mullions should be marked on the outer frame members. Where the transom/mullion runs right through, it should be marked out on both jambs or head and cill members in pairs to ensure accurate alignment of the sections.

Using the marked centre line, Drill the transom/mullion fixing holes using a 5mm dia. drill bit.

Corners are formed by coating the cut faces to be joined with a suitable small gap sealer. Into the mitred corner insert the cleat glue and the required corner cleats and, where required, the aluminium corner chevrons. The two mitred ends are then brought together and crimped. The small gap sealer ensures a permanent joint and guards against the ingress of moisture and joint movement. After crimping the corner joint, special care should be taken to ensure any excess sealer is removed from painted surfaces.

Transoms or mullions are cut with square ends to the sizes calculated on the cutting formula sheets. The ends are then profiled to allow them to fit into the outer frame. Special tooling is available on request to profile the end of transom/mullion.

Prior to fixing of transoms and mullions smear the cut ends with a suitable small gap sealer. After fixing, special care should be taken to ensure any excess is cleared from painted surfaces.

VENT

Prior to crimping the vents, remove the corners to the hardware channels to allow assembly of the tilt & turn hardware.

Corners are formed by coating the cut faces to be joined with a suitable gap sealer. In the mitred corner insert the cleat glue and the required corner cleats and chevrons. The mitred ends are then brought together and crimped. The small gap sealer ensures a permanent joint and guards against the ingress of moisture and joint movement. Care should be taken to ensure any excess sealer is removed from the surfaces.

For advise on window sizes outside of the recommended design limitations, please contact the Technical Department at Smart Systems Ltd Tel: 01934 876100

Specification

GLAZING

All beads are cut to suit the glazing aperture on the fully assembled window for glazing either at factory or on site as required.

INTERNALLY BEADED GLAZING

Glazing beads are fitted to openings by cutting the horizontal beads square to head and cill of each vent and fixed light area. Vertical beads are cut square at both ends. Insert bottom beads and two setting blocks to ensure glass will be centralized in vertical dimension of opening (glazing blocks must be full width of cavity to fully support glass or sealed unit), then insert top bead followed by side beads. Finish glazing by insertion of internal gaskets all round.

Hardware

For Hardware components, please refer to the SB-Chrono manual.

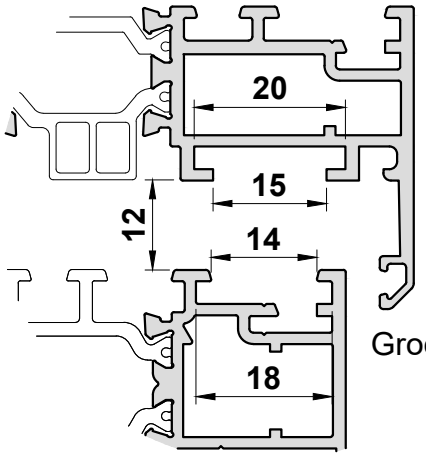

Groove Dimensions

Specification

Alitherm 400 Tilt & Turn Window Weather Performance (BS6375-1) Audited and assessed by BSI. Kitemark KM81580

BS EN 1026: 2000 Air Permeability: Class 4
BS EN 1027: 2000 Watertightness: Class 9A
BS EN 12211: 2000 Resistance to Wind Load: BE2400

Alitherm 400 Tilt & Turn Window With Sobinco Safe Invision Security (PAS 24) Audited and assessed by BSI. Kitemark KM81580

PAS24:2022

Alitherm 400 Tilt & Turn Window U Values

Please refer to the Smart Systems' Document L White Paper or contact the Technical Department.

Number	Picture	Page	Perim. mm	Mec. mm	Ix(cm4) wx(cm3)	Iy(cm4) wy(cm3)	Length	Pack pr.	MF	SA	KL	HP	M
ETC4011	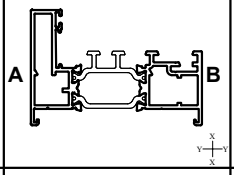	A13	355	91	28.06 / 7.35	5.81 / 2.85	6.5	1	✓	✓	✓	✓	✓
ETC4014	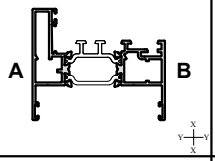	A13	412	114	32.69 / 10.97	8.45 / 2.63	6.5	1	✓	✓	✓	✓	✓
ETC4016	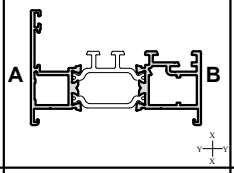	A14	358	82	26.29 / 7.28	3.93 / 2.15	6.5	1	✓	✓	✓	✓	✓
ETC4018	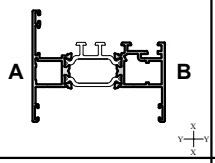	A14	415	106	30.95 / 8.60	6.14 / 2.22	6.5	1	✓	✓	✓	✓	✓
ETC4021	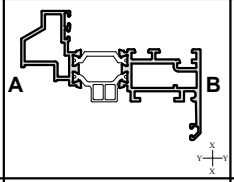	A15	411	86	31.89 / 7.23	6.27 / 2.50	6.5	1	✓	✓	✓	✓	✓
ETC4028	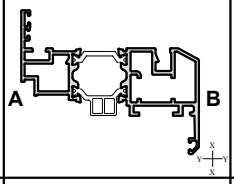	A15	444	91	39.12 / 10.54	7.83 / 2.31	6.5	1	✓	✓	✓	✓	✓
ETC4031	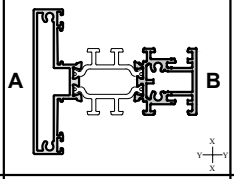	A16	424	116	34.93 / 8.73	12.29 / 3.95	6.5	1	✓	✓	✓	✓	✓
ETC4036	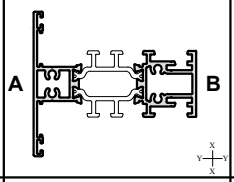	A16	425	69	32.59 / 8.69	6.19 / 1.99	6.5	1	✓	✓	✓	✓	✓
UN3160G	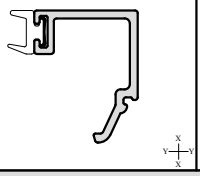	A17	120	39	- / -	- / -	6.5	1	✓	✓	✓	✓	

A = Outside
B = Inside

MF = Mill Finish
SA = Silver Anodised
KL = Basic Colour
HP = Special Colour
M = Dual Colour

Number	Picture	Page	Perim. mm	Mec. mm	Ix(cm4) wx(cm3)	Iy(cm4) wy(cm3)	Length	Pack pr.	MF	SA	KL	HP	M
UN3160	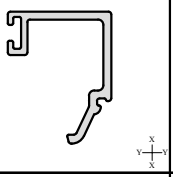	A17	105	41	- — -	- — -	6.5	1	✓	✓	✓	✓	
UN3162	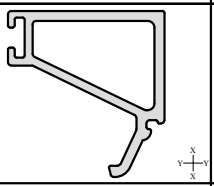	A17	120	120	- — -	- — -	6.5	1	✓	✓	✓	✓	
UN3164	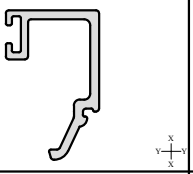	A18	112	33	- — -	- — -	6.5	1	✓	✓	✓	✓	
UN3166	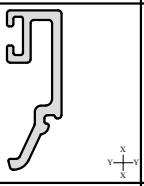	A19	98	43	- — -	- — -	6.5	1	✓	✓	✓	✓	
UN3168	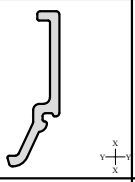	A20	65	23	- — -	- — -	6.5	1	✓	✓	✓	✓	
ETC4061	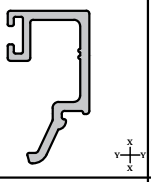	A18	112	33	- — -	- — -	6.5	1	✓	✓	✓	✓	
ETC4061G	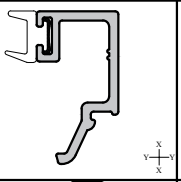	A18	112	33	- — -	- — -	6.5	1	✓	✓	✓	✓	
ETC4063	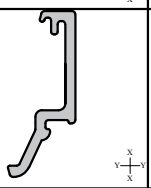	A20	82	24	- — -	- — -	6.5	1	✓	✓	✓	✓	
ETC4067G	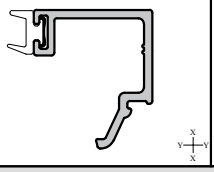	A17	127	41	- — -	- — -	6.5	1	✓	✓	✓	✓	

A = Outside
B = Inside

MF = Mill Finish
SA = Silver Anodised
KL = Basic Colour
HP = Special Colour
M = Dual Colour

ISSUED : June 2025

Number	Picture	Page	Perim. mm	Mec. mm	Ix(cm4) wx(cm3)	Iy(cm4) wy(cm3)	Length	Pack pr.	MF	SA	KL	HP	M
ETC4067	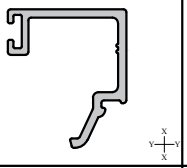	A17	127	41	- — -	- — -	6.5	1	✓	✓	✓	✓	
ETC4079	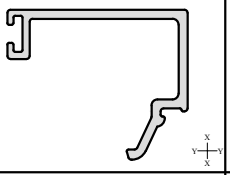	A18	144	47	- — -	- — -	6.5	1	✓	✓	✓	✓	
ETC4179G	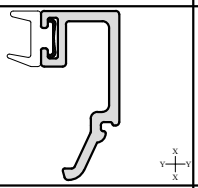	A19	104	29	- — -	- — -	6.5	1	✓	✓	✓	✓	
ETC4179	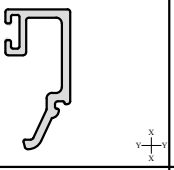	A19	104	29	- — -	- — -	6.5	1	✓	✓	✓	✓	
UN3010	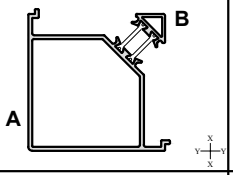	A21	369	226	41.4 ----- 10.7	40 ----- 11.6	6.5	1	✓	✓	✓	✓	✓
UN3011	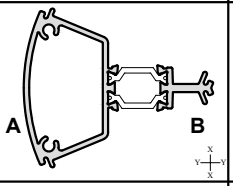	A21	288	130	22.3 --- 5	12.2 --- 4.1	6.5	**1**	✓	✓	✓	✓	✓
UN3012	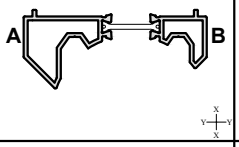	A27	238	76	1.53 --- 0.79	17.24 --- 5.09	6.5	1	✓	✓	✓	✓	✓
UN3015	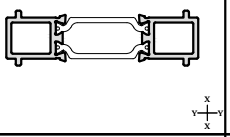	A22	214.5	56	18.1 — 5.2	1 — 1	6.5	1	✓	✓	✓	✓	✓
UN3020	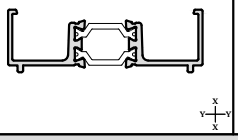	A22	281.6	70.4	14.8 — 4.2	0.9 — 1	6.5	1	✓	✓	✓	✓	✓

A = Outside
B = Inside

MF = Mill Finish
SA = Silver Anodised
KL = Basic Colour
HP = Special Colour
M = Dual Colour

Number	Picture	Page	Perim. mm	Mec. mm	Ix(cm4) wx(cm3)	Iy(cm4) wy(cm3)	Length	Pack pr.	MF	SA	KL	HP	M
UN3042	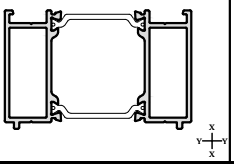	A22	288.4	111	31.2 --- 8.9	9.5 --- 4.3	6.5	1	✓	✓	✓	✓	✓
UN3370	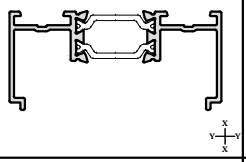	A23	360	61	18.4 --- 5.26	2.15 --- 1.97	6.5	**1**	✓	✓	✓	✓	✓
ETC080	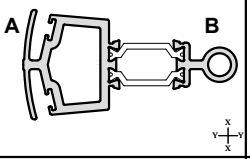	A24	344	61	25.58 ----- 5.47	4.88 ----- 2.57	6.5	1	✓	✓	✓	✓	✓
ETC081	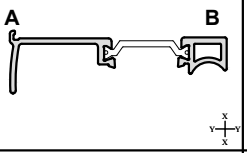	A24	197	35	13.85 ----- 3.8	0.36 ----- 0.52	6.5	1	✓	✓	✓	✓	✓
ETC082	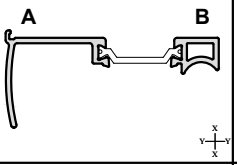	A24	221	47	16.21 ----- 4.19	1.15 ----- 1.29	6.5	**1**	✓	✓	✓	✓	✓
ETC083	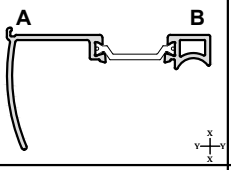	A24	243	58	17.66 ----- 4.32	2.64 ----- 2.36	6.5	1	✓	✓	✓	✓	✓
ETC357	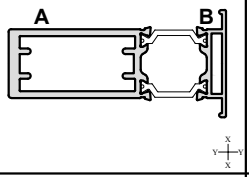	A23	297	138	41.5 --- 9.86	52 --- 2.67	6.5	1	✓	✓	✓	✓	✓
ETC869	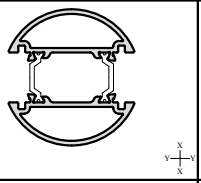	A27	332	144	18.38 --- 6.13	14.3 --- 5.17	6.5	1	✓	✓	✓	✓	✓
ETC451	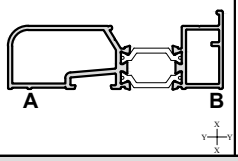	A25	271	180	32.44 ----- 7.29	3.46 ----- 2.79	6.5	1	✓	✓	✓	✓	✓

A = Outside
B = Inside

MF = Mill Finish
SA = Silver Anodised
KL = Basic Colour
HP = Special Colour
M = Dual Colour

Alitherm 400 Tilt & Turn

PROFILES : TECHNICAL INFORMATION

Number	Picture	Page	Perim. mm	Mec. mm	Ix(cm4) wx(cm3)	Iy(cm4) wy(cm3)	Length	Pack pr.	MF	SA	KL	HP	M
ETC452	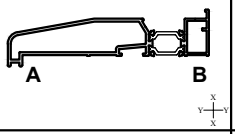	A25	414	382	122.46 ----- 18.03	6.01 ----- 3.34	6.5	1	✓	✓	✓	✓	✓
ETC457	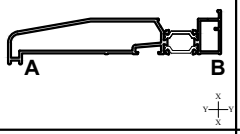	A25	444	212	164.27 — 21.60	6.79 — 3.73	6.5	1	✓	✓	✓	✓	✓
ETC458	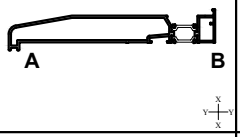	A26	524	492	313.62 ----- 32.63	8.87 ----- 4.79	6.5	1	✓	✓	✓	✓	✓
ETC477		A26	752	408	1591.6 ----- 105.33	26.84 ----- 12.84	6.5	1	✓	✓	✓	✓	✓
ETC479N	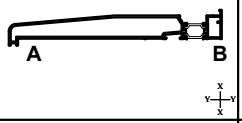	A26	594	559	501.64 ----- 44.04	9.72 ----- 5.34	6.5	1	✓	✓	✓	✓	✓

A = Outside
B = Inside

MF = Mill Finish
SA = Silver Anodised
KL = Basic Colour
HP = Special Colour
M = Dual Colour

Alitherm 400 Tilt & Turn

PROFILES : TECHNICAL INFORMATION

Number	Picture	Page	Perim. mm	Mec. mm	Ix(cm4) wx(cm3)	Iy(cm4) wy(cm3)	Length	Pack pr.	MF	SA	KL	HP	M

A = Outside
B = Inside

MF = Mill Finish
SA = Silver Anodised
KL = Basic Colour
HP = Special Colour
M = Dual Colour

ISSUED : June 2025

Primary Visible Side – – – – – – – – – – – – – – – – – **Secondary Visible Side** — · — · — · — · — · —

ETC4011
Outer Frame

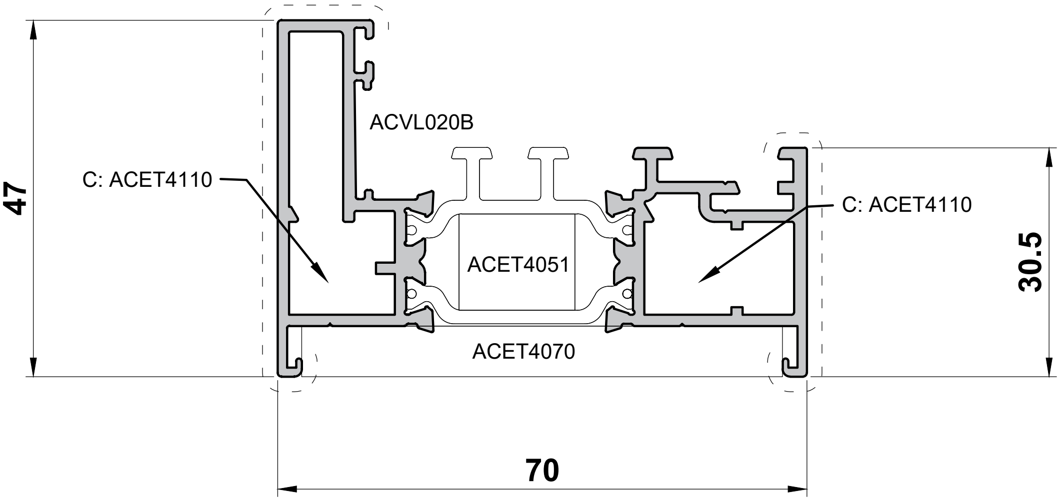

ETC4014
Long Leg Outer Frame

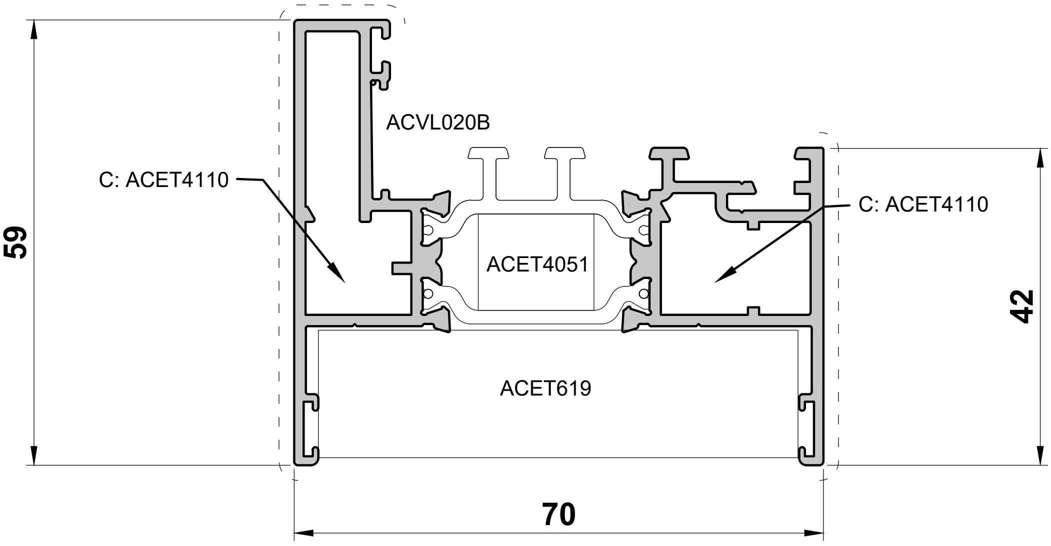

Scale 1:1

Primary Visible Side — Secondary Visible Side — · — · — · — · — · — · — · — · — · — · —

ETC4016
Outer Frame

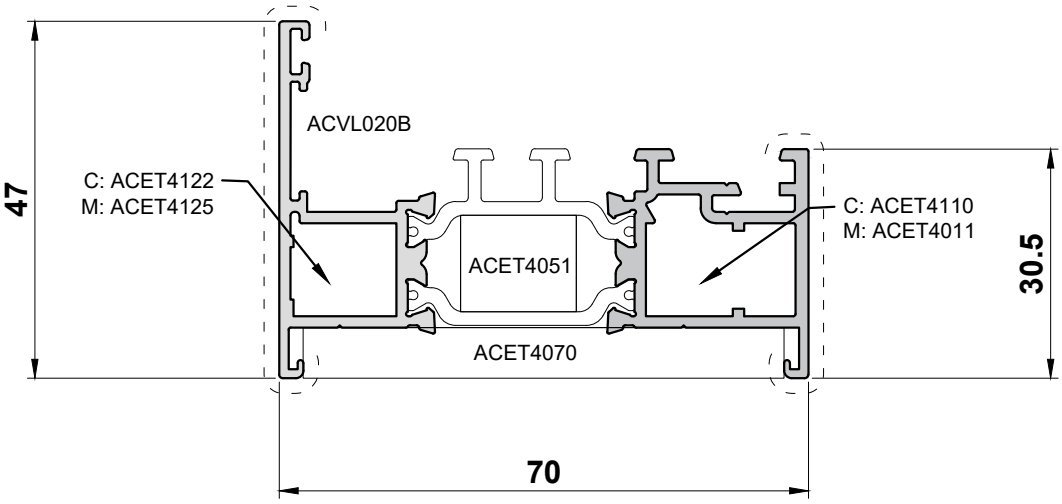

ETC4018
Long Leg Outer Frame

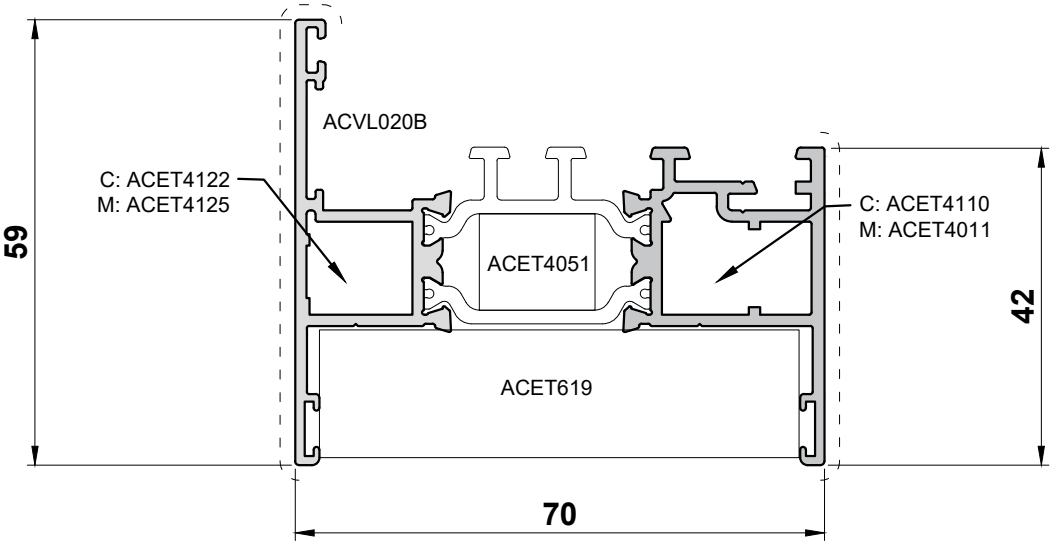

Scale 1:1

Primary Visible Side - - - - - - - - - - - - - - - - - - Secondary Visible Side — · · — · · — · · — · · — · · — · · —

ETC4021
Sash

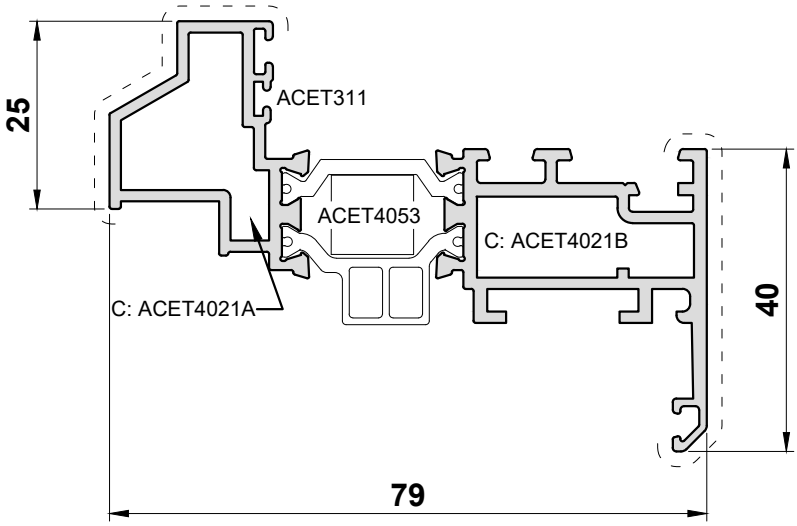

ETC4028
Sash

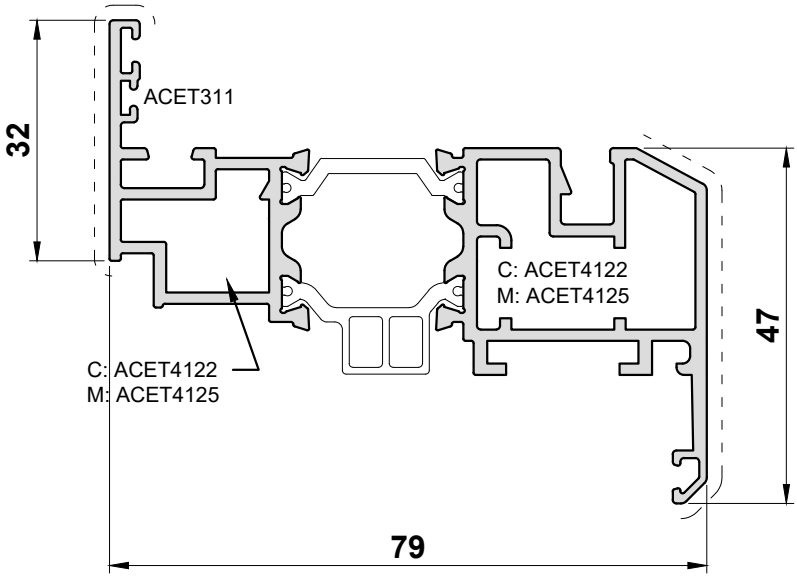

Scale 1:1

Primary Visible Side - - - - - - - - - - - - - - - - - - Secondary Visible Side — · — · — · — · — · — · — · — · —

ETC4031
Transom / Mullion

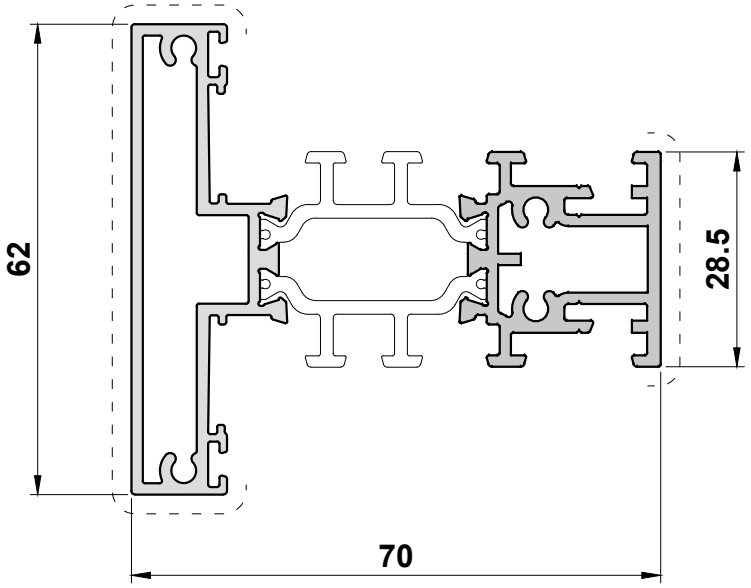

ETC4036
Transom / Mullion

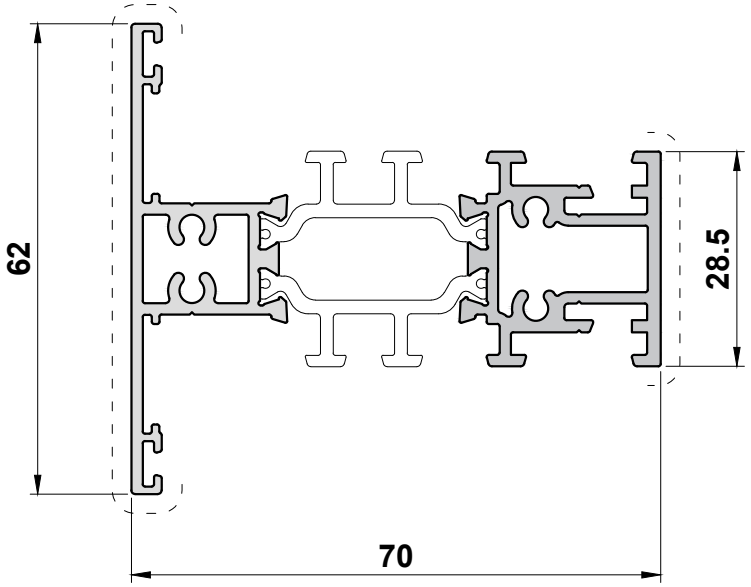

Scale 1:1

Primary Visible Side - - - - - - - - - - - - - - - - - - Secondary Visible Side — · · — · · — · · — · · — · · — · · —

UN3162
24mm Glazing
Tap In Glazing Bead

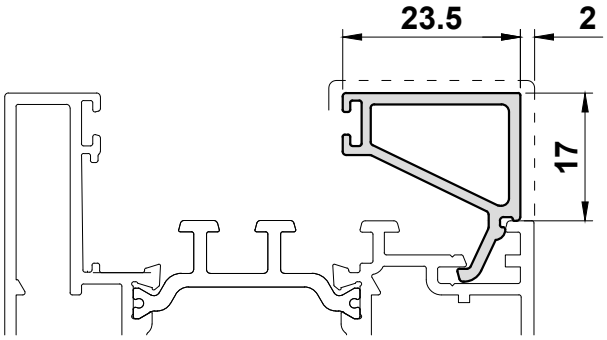

UN3160G
28mm Glazing
Tap In Glazing Bead

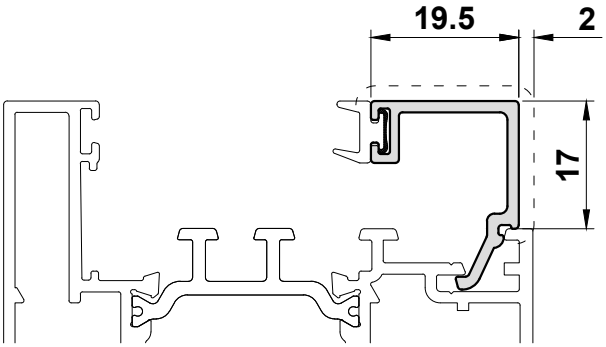

UN3160
28mm Glazing
Tap In Glazing Bead

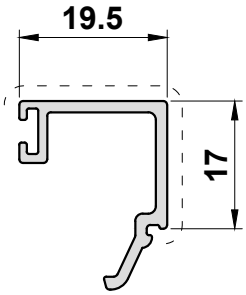

ETC4067G
28mm Glazing
Tap In Glazing Bead

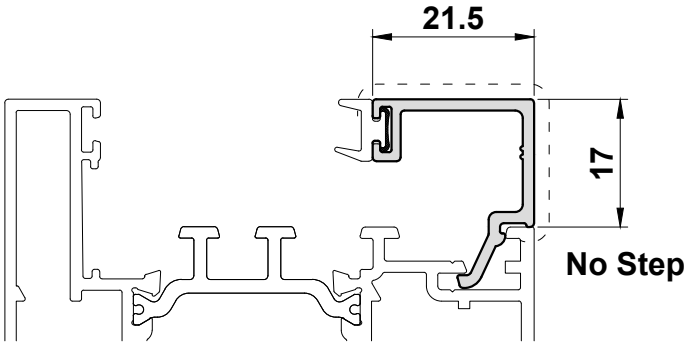

ETC4067
28mm Glazing
Tap In Glazing Bead

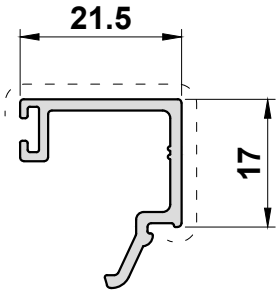

Scale 1:1

Primary Visible Side - - - - - - - - - - - - - - - - - - Secondary Visible Side — · · — · · — · · — · · — · · — · · — · · —

ETC4079
28mm Glazing
Tap In Glazing Bead

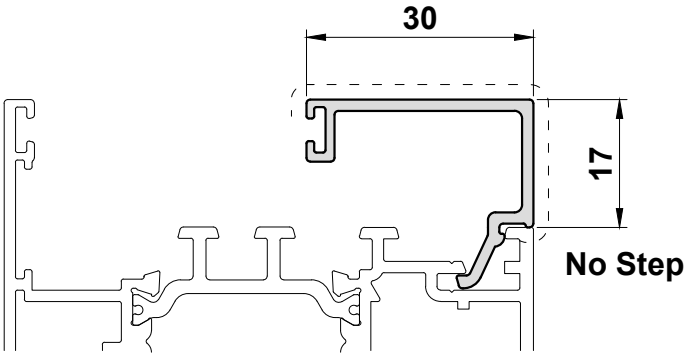

UN3164
32mm Glazing
Tap In Glazing Bead

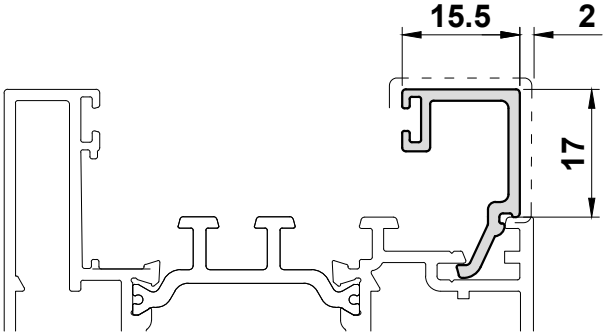

ETC4061G
36mm Glazing
Tap In Glazing Bead

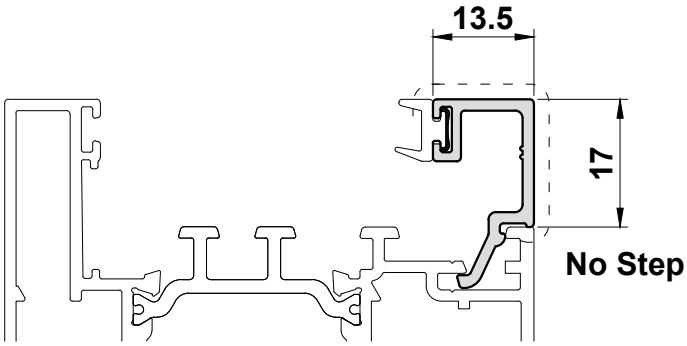

ETC4061
36mm Glazing
Tap In Glazing Bead

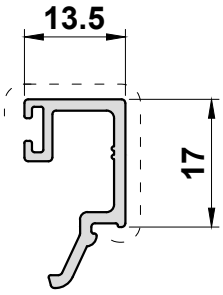

Scale 1:1

Primary Visible Side — — — — — — — — — — — — — — — — Secondary Visible Side — · — · — · — · — · — · — · —

ETC4179G
36mm Glazing
Tap In Glazing Bead

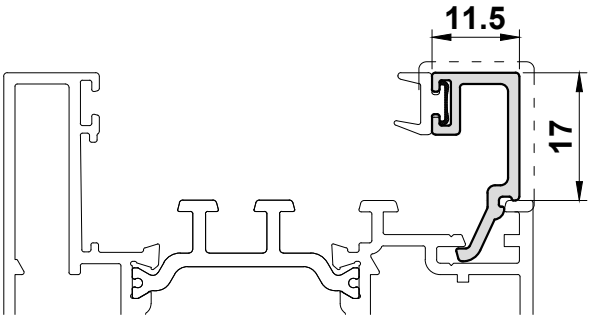

ETC4179
36mm Glazing
Tap In Glazing Bead

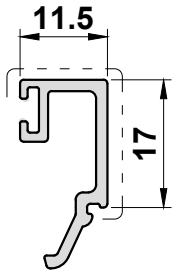

UN3166
40mm Glazing
Tap In Glazing Bead

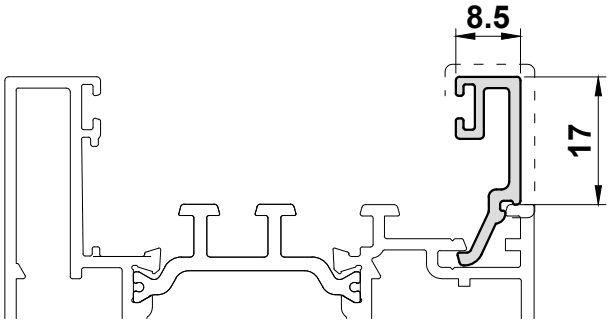

Primary Visible Side - - - - - - - - - - - - - - - - - - Secondary Visible Side — · · — · · — · · — · · — · · — · · —

UN3168
45mm Glazing
Tap In Glazing Bead

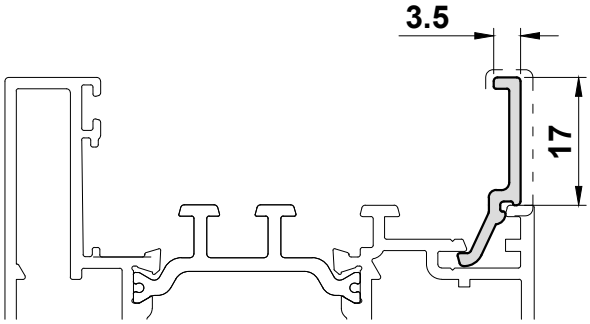

ETC4063
45mm Glazing
Tap In Glazing Bead

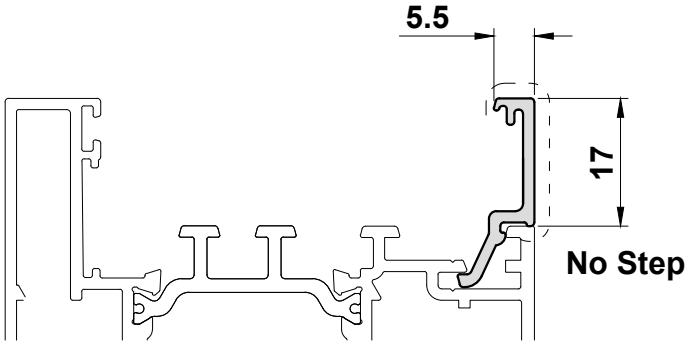

Scale 1:1

Primary Visible Side - - - - - - - - - - - - - - - - - - Secondary Visible Side — · · — · · — · · — · · — · · — · · — · · —

UN3010

70mm 90° Corner Post

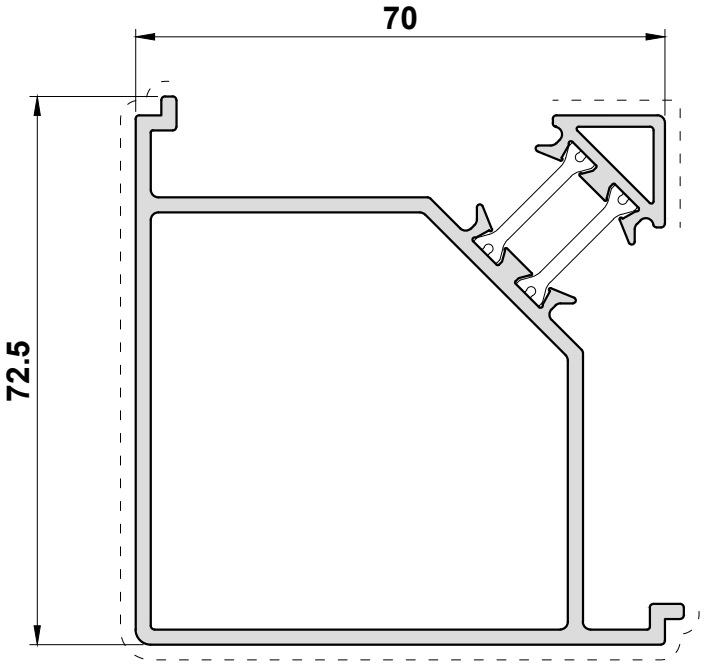

UN3011

135° Bay Pole

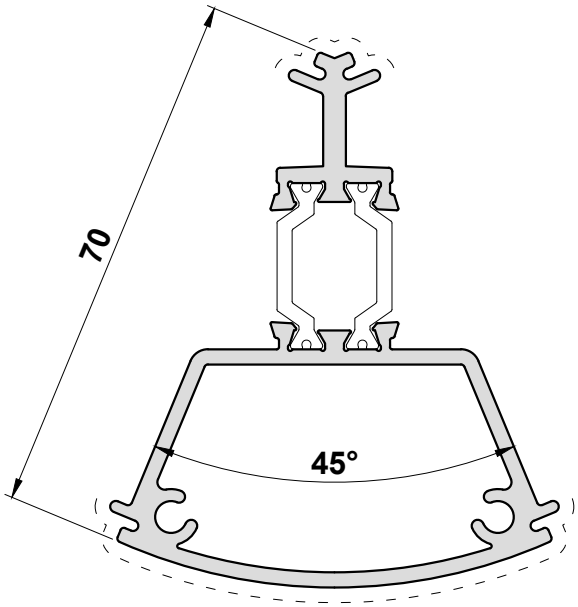

Scale 1:1

Primary Visible Side - - - - - - - - - - - - - - - - - - Secondary Visible Side — · · — · · — · · — · · — · · — · · —

UN3015
70mm x 15mm Coupler

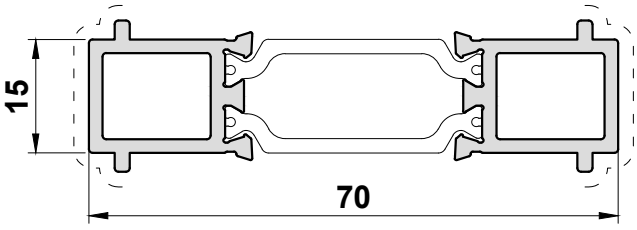

UN3020
20mm Frame Extension

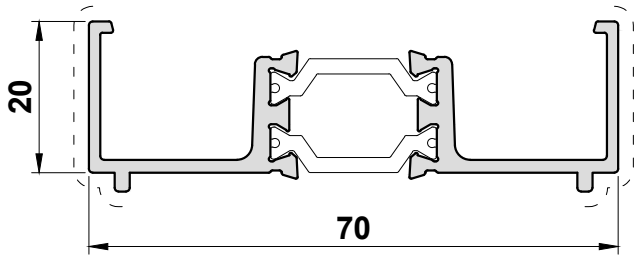

UN3042
70mm x42mm Head Extension

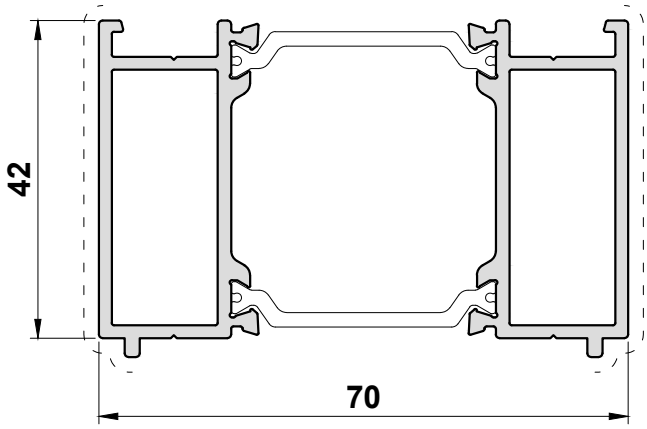

Scale 1:1

Primary Visible Side - - - - - - - - - - - - - - - - - - Secondary Visible Side — · — · — · — · — · — · —

UN3370
70mm x 32.5mm Head Extension

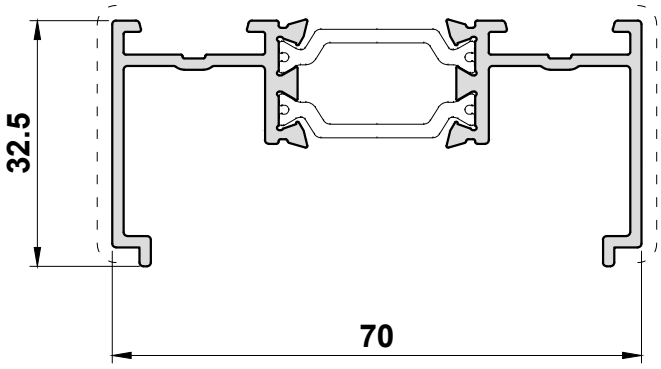

ETC357
Coupler

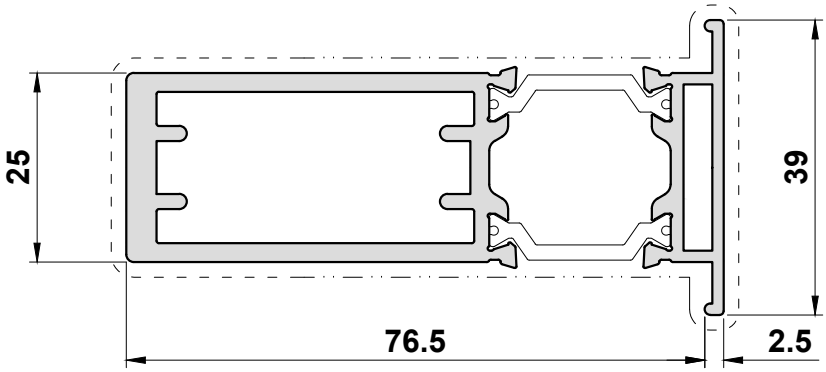

Scale 1:1

Primary Visible Side - - - - - - - - - - - - - - - - - - Secondary Visible Side — · — · — · — · — · — · — · — · —

ETC080
Bay Pole

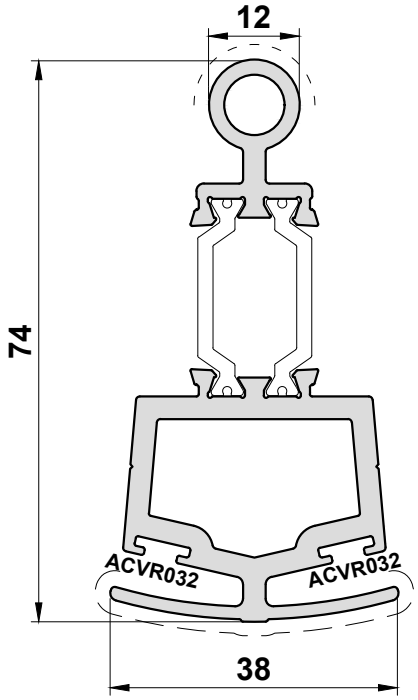

ETC081
169° - 150°
Bay Pole Adaptor

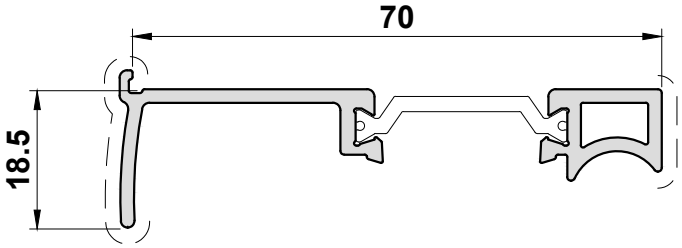

ETC082
149° - 130°
Bay Pole Adaptor

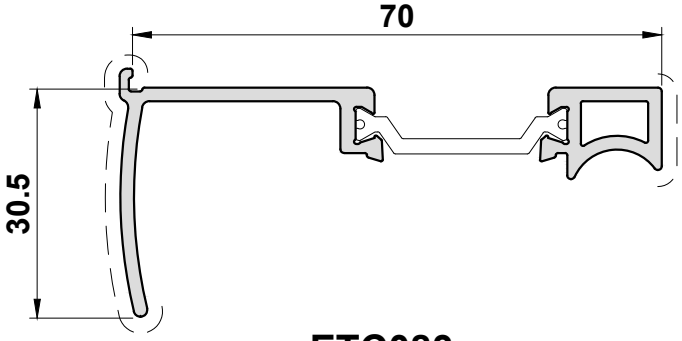

ETC083
129° - 115°
Bay Pole Adaptor

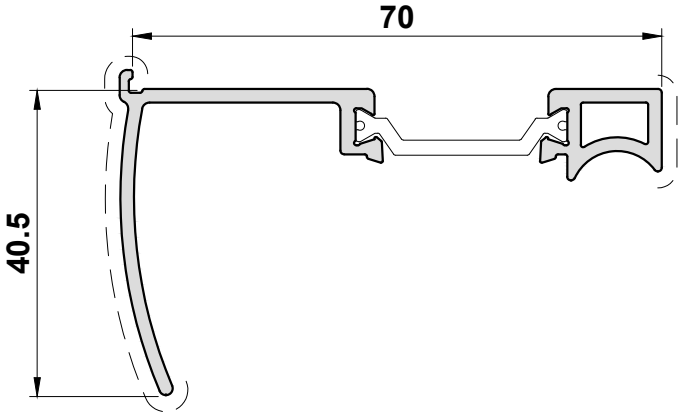

Scale 1:1

Alitherm 400 Tilt & Turn

PROFILE : SCALED PROFILE DRAWINGS

Primary Visible Side – – – – – – – – – – – – – – – – – **Secondary Visible Side** —·—·—·—·—·—·—

ETC451
85mm Cill

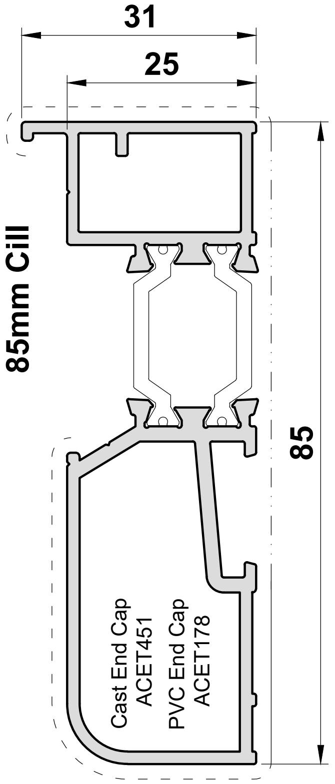

ETC452
135mm Cill

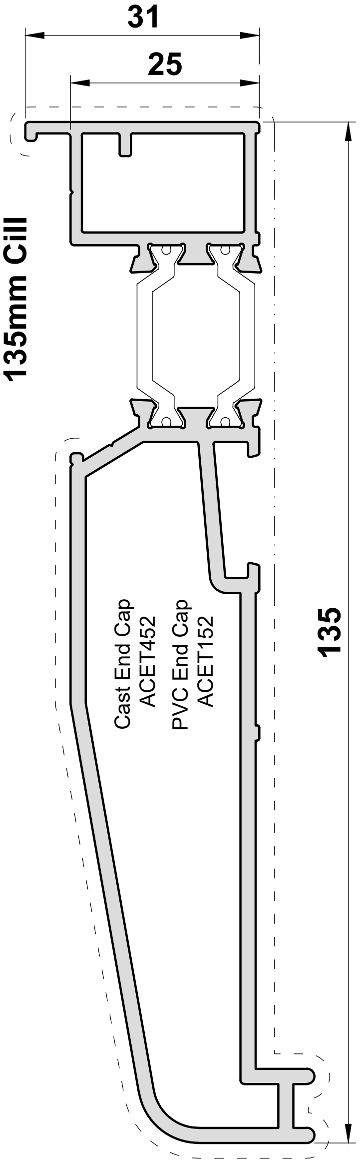

ETC457
150mm Cill

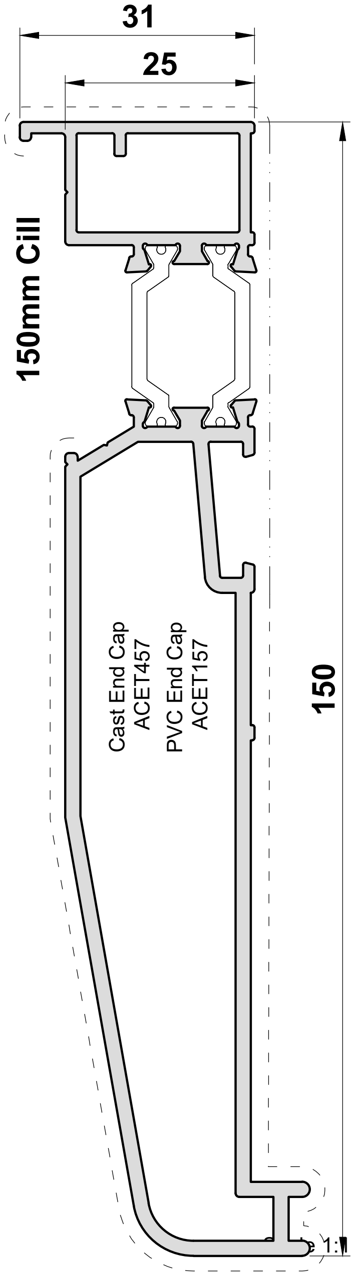

Scale 1:1

Primary Visible Side – – – – – – – – – – – –   **Secondary Visible Side** —·—·—·—·—

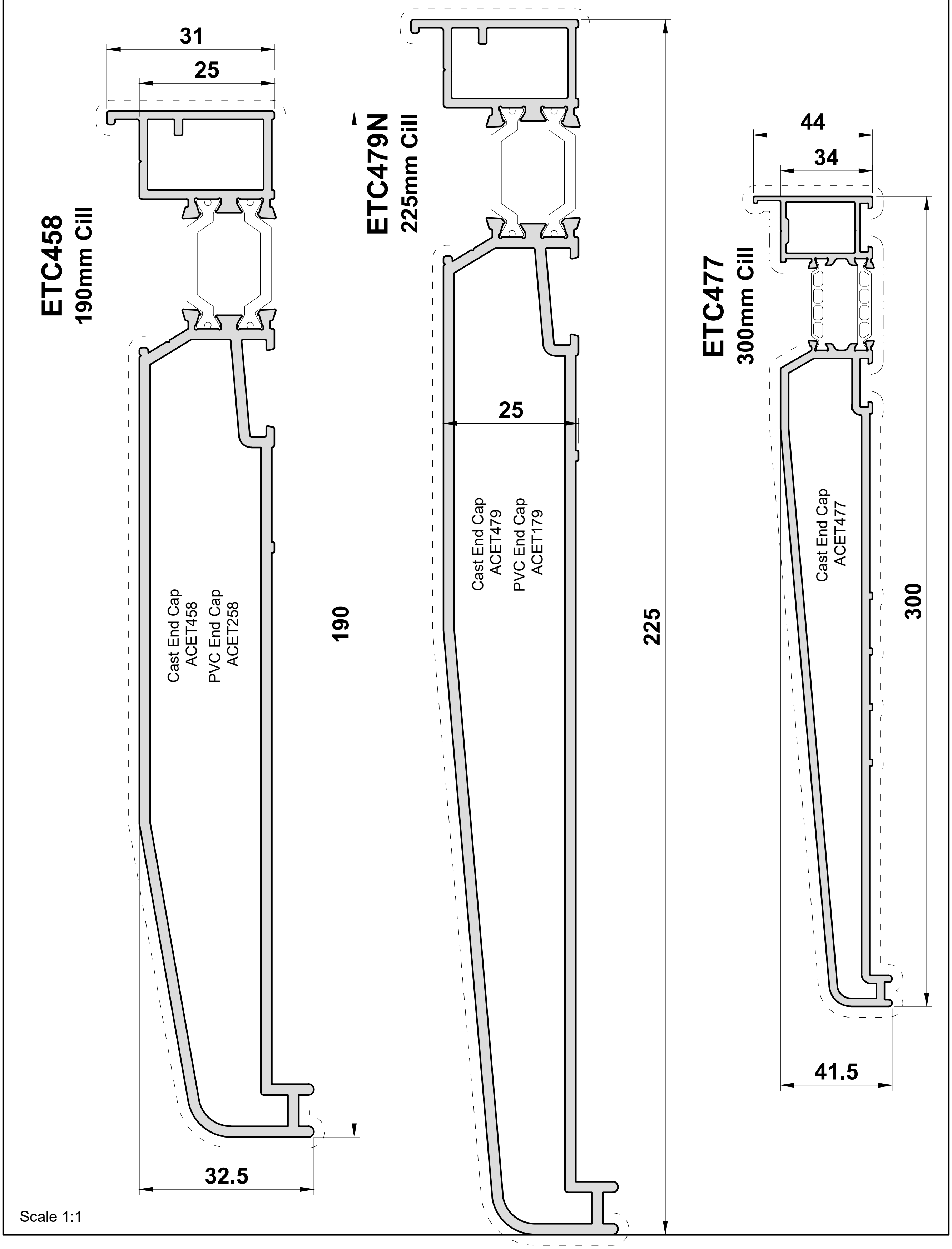

Scale 1:1

Alitherm 400 Tilt & Turn

Primary Visible Side – – – – – – – – – – – – – – – – – **Secondary Visible Side** —·—·—·—·—·—·—

UN3012

Bay Pole Adaptor

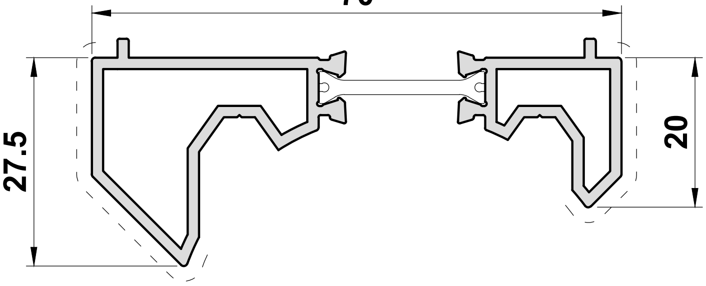

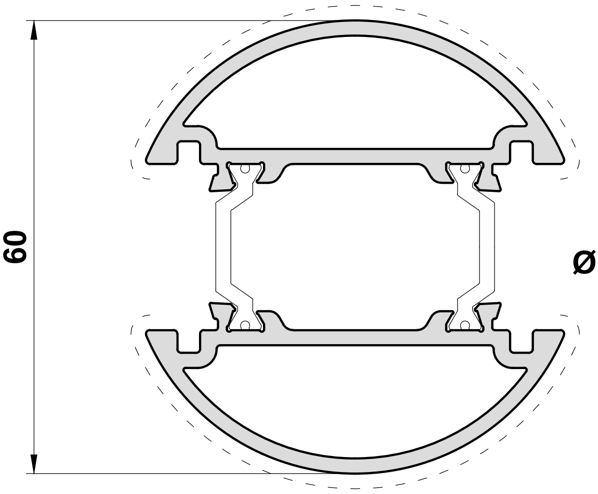

ETC869

Ø60mm Bay Pole

Scale 1:1

Primary Visible Side – – – – – – – – – – – – – – – – – – **Secondary Visible Side** — · · — · · — · · — · · — · · — · · — · · —

Scale 1:1

Section B

Accessories

Photos & Drawings

Corner Joint - Crimping

	Profile	Crimping Punches	Vee Block	Nylon Support	Packer
Outerframe	ETC4011 ETC4014 ETC4016 ETC4018	ACET4395	ACUN3950 ACUN3951 Or ACUN3950 ACUN3964	ACUN3952	ACET4381 ACET4383
Sash	ETC4021	ACET4394N	ACUN3950 ACUN3951	ACUN3952	ACET4381 ACET4383
Sash	ETC4028	ACET4394N	ACUN3950 ACUN3964	ACUN3952	ACET4381 ACET4382

PNEUMATIC CRIMPER
ACCR100

MANUAL CRIMPER
WUT024HSZA

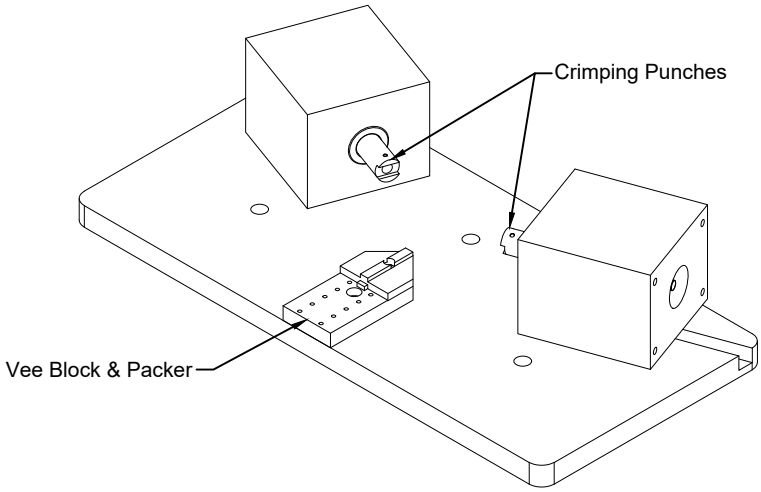

Countersunk Screws

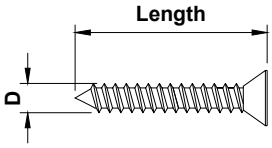

Gauge	'D' (mm)
No.6	3.5
No.7	3.8
No.8	4
No.10	5
No.12	6

Part Number	Gauge	X	Length	Description	Box Qty.
ACUN3530	No.6	X	5/8"	Countersunk Pozi Self Tapper S/S	100
MUA025SSZ	No.6	X	1"	Countersunk Pozi Self Tapper S/S	100
ACET067	No.7	X	1/2"	Countersunk Pozi Self Tapper S/S	100
ACET060	No.7	X	1"	Countersunk Pozi Self Tapper S/S	100
ACET066	No.7	X	1 1/2"	Countersunk Pozi Self Tapper S/S	100
MUA067SSZ	No.7	X	2"	Countersunk Pozi Self Tapper S/S	100
ACUN3544	No.7	X	3/4"	Countersunk Pozi Self Tapper S/S	100
ACET064	No.8	X	5/8"	Countersunk Pozi Self Tapper S/S	100
ACUN3512	No.8	X	1 1/4"	Countersunk Pozi Self Tapper S/S	100
ACUN3513	No.8	X	1 3/4"	Countersunk Pozi Self Tapper S/S	100
ACET072	No.8	X	2 1/2"	Countersunk Pozi Self Tapper S/S	100
ACET490	4.3mm	X	16mm	Countersunk PH2 Polyamide Screw	1000
ACET290	4.3mm	X	20mm	Countersunk PH2 Polyamide Screw	100
ACET390	4.3mm	X	25mm	Countersunk PH2 Polyamide Screw	200
ACET190	4.3mm	X	45mm	Countersunk PH2 Polyamide Screw	1000
ACVS062	4.3mm	X	65mm	Countersunk PH2 Polyamide Screw	1000
ACET048	No.10	X	3/8"	Countersunk Pozi Self Tapper S/S	100
ACIM062	No.10	X	1 1/4"	Countersunk Pozi Self Tapper S/S	100
ACET062	No.10	X	2"	Countersunk Pozi Self Tapper S/S	100
ACET076	No.10	X	2 1/2"	Countersunk Pozi Self Tapper S/S	100

Pan Head Screws

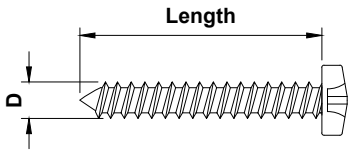

Gauge	'D' (mm)
No.6	3.5
No.7	3.8
No.8	4
No.10	5
No.12	6

Part Number	Gauge	X	Length	Description	Box Qty.
ACET068	No.8	X	3/8"	Pozi Flange AB	100
ACET063	No.8	X	1/2"	Pan Head Self Tapper	100
ACET070	No.8	X	1/2"	Pozi Flange Self Tapper S/S	100
ACUN3535	No.8	X	5/8"	Pan Head Pozi S/S	100
ACET099	No.8	X	3/4"	Pozi Flange Self Tapper S/S	100
ACDR050	4.8mm	X	32mm	Pan Head Pozi S/S	200
PUA028	No.10	X	1"	Pan Head Pozi S/S	100
ACDR052	No.10	X	2"	Pan Head Self Tapper S/S	200
ACET079	No.10	X	2 1/2"	Pan Head Pozi S/S	100
ACW20160	No.12	X	1"	Flange Head Self Tapper S/S	100
ACMC109	6.3mm	X	38mm	DIN7981 - Pan Head Self Tapper	200

Machine Screws

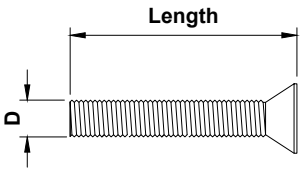

Thread	'D' (mm) Nominal
M4	4
M5	5
M6	6
M8	8
M10	10

Part Number	Thread	X	Length	Description	Box Qty.
ACET122	M4	X	10	CSK Pozi Machine Screw	100
ACET123	M4	X	20	CSK Pozi Machine Screw	100
ACDV264	M4	X	35	CSK Pozi Machine Screw	100
ACSG071	M4	X	40	CSK Pozi Machine Screw	100
ACDV266	M4	X	45	CSK Pozi Machine Screw	100
ACDV262	M4	X	50	CSK Pozi Machine Screw	100
ACDV265	M4	X	60	CSK Pozi Machine Screw	100
ACDR051	M5	X	10	CSK Pozi Machine Screw	100
ACET069	M5	X	12	CSK Pozi Machine Screw	100
HEA132	M5	X	16	CSK Pozi Machine Screw	100
WCA134	M5	X	20	CSK Pozi Machine Screw	100
WCA143	M5	X	25	CSK Pozi Machine Screw	50
ACVS061	M5	X	40	CSK Pozi Machine Screw	100
ACET133	M5	X	50	CSK Pozi Machine Screw	100
ACET220	M5	X	60	CSK Pozi Machine Screw	100
ACET238	M5	X	70	CSK Pozi Machine Screw	100
ACMX861	M5	X	80	DIN965 - CSK Machine Screw	10
ACMX862	M5	X	90	DIN965 - CSK Machine Screw	10
ACUN3503	M6	X	10	CSK Socket Machine Screw	24
ACUN3501	M6	X	13	CSK Flange Socket Machine Screw	48
ACMX852	M6	X	16	DIN965 - CSK Machine Screw	10
HEA390	M6	X	16	CSK Socket Machine Screw	32
ACET235	M6	X	60	CSK Pozi Machine Screw	100
ACET237	M6	X	70	CSK Pozi Machine Screw	100

Glazing Gaskets

Retaining Gasket

Commonly known as an E Gasket. Retaining gaskets create a seal between the Glass and the Aluminium Profile.

High Line	2mm		**ACVG231**
			200m
			BL
	3mm		**ACVG31**
			200m
			BL
	4mm		**ACVG131**
			100m
			BL
Low Line	2mm	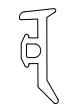	**ACET844**
			200m
			BL
	3mm		**ACET842**
			200m
			BL
	4mm	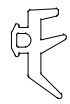	**ACET841**
			200m
			BL
	4mm	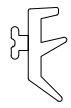	**ACET835**
			200m
			BL

Thickness	Drawing 1:1	**Part number**
		Coil length
		Available Colours

Wedge Gasket

Wedge Gaskets help to hold the bead in place by providing tension between the bead and the glazing unit.

High Line	3mm		**ACVG32**
			100m
			BL
	3mm		**ACVG32N**
			100m
			BL
	4mm		**ACVG33**
			100m
			BL
	4mm		**ACVG33N**
			100m
			BL
	5mm		**ACVG34**
			100m
			BL
	5mm		**ACVG34N**
			100m
			BL
	6mm		**ACVG340**
			200m
			BL
	6mm		**ACVG340N**
			100m
			BL
Low Line	4mm - 3mm		**ACW20038**
			50m
			BL
	5mm - 4mm		**ACET848**
			200m
			BL

Image	Part Code	Pack	Unit	Application	Colour
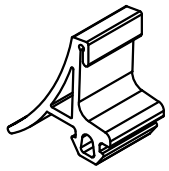	**ACEF030A** **Central gasket outward** **(Pre-formed corners = ACEF031A)**	**100**	**m**	**ETC4011** **ETC4014** **ETC4016** **ETC0118** **ETC4031** **ETC4036**	MF SA KL HP SSC SMC W Z ✓ PC
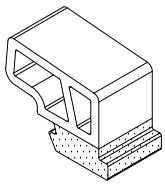	**ACEF030B** **Central gasket inward**	**100**	**m**	**ETC4011** **ETC4014** **ETC4016** **ETC0118** **ETC4031** **ETC4036**	MF SA KL HP SSC SMC W Z ✓ PC
	**ACEF031A** **Pre-formed corners for ACEF030A**	**48**	**Pack**	**ETC4011** **ETC4014** **ETC4016** **ETC0118** **ETC4031** **ETC4036**	MF SA KL HP SSC SMC W Z ✓ PC
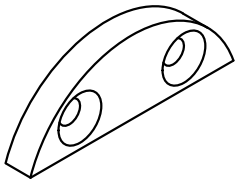	**ACET041** **Cill Nose Bracket**	**1**	**Pack**	**ETC451** **ETC452** **ETC457** **ETC458** **ETC479**	MF ✓ SA KL HP SSC SMC W Z PC
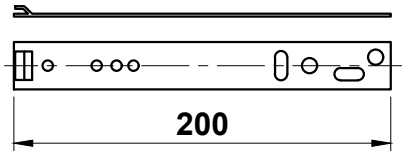	**ACET130** **Galvanized Steel Fixing Strap** **200mm x 25mm x 1.5mm**	**100**	**Pack**	**ETC4011** **ETC4014** **ETC4016** **ETC4018**	MF SA KL HP SSC SMC W Z PC

T-BARS
ACVG65=2.5mm
ACVG66=3.0mm
ACVL150=4.0mm

Screw (Grub)

MF = Mill Finish
SA = Silver Anodised
KL = Basic Colour
HP = Special Colour
SSC = Smooth Satin Chrome
SMC = Smokey Chrome
PC = Polished Chrome
W = White
Z = Black

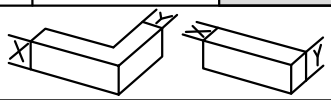

Image	Part Code	Pack	Unit	Application	Colour	
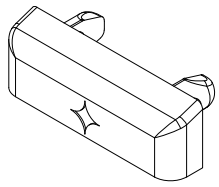	**ACET131** **Drainage Cover Cap** **For colour matched drainage caps, please order ACET432**	**100**	**Pack**	**ETC4011** **ETC4014** **ETC4016** **ETC4018**	MF SA KL HP SSC SMC W Z PC	 ✓ ✓
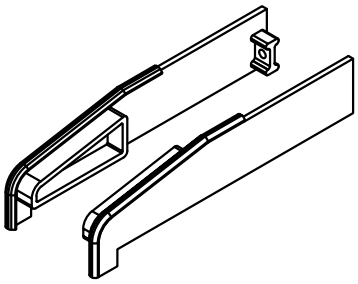	**ACET152** **PVC End Cap**	**10**	**Pair**	**ACET452**	MF SA KL HP SSC SMC W Z PC	 ✓ ✓
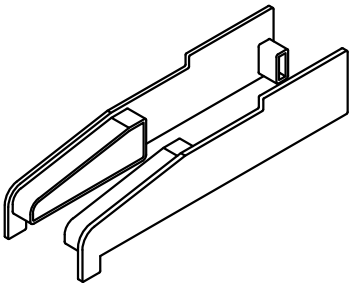	**ACET157** **PVC End Cap**	**10**	**Pair**	**ETC457**	MF SA KL HP SSC SMC W Z PC	 ✓ ✓
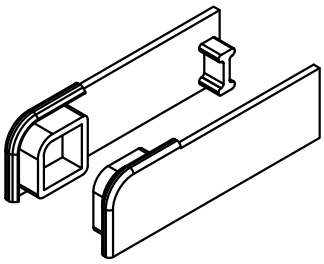	**ACET178** **PVC End Cap**	**10**	**Pair**	**ETC451**	MF SA KL HP SSC SMC W Z PC	 ✓ ✓
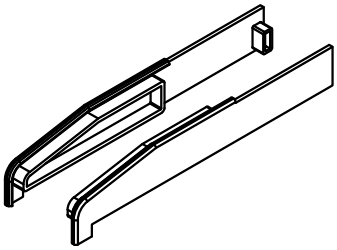	**ACET258** **PVC End Cap**	**10**	**Pair**	**ETC458**	MF SA KL HP SSC SMC W Z PC	 ✓ ✓

T-BARS
ACVG65=2.5mm
ACVG66=3.0mm
ACVL150=4.0mm

Screw (Grub)

MF = Mill Finish
SA = Silver Anodised
KL = Basic Colour
HP = Special Colour
SSC = Smooth Satin Chrome
SMC = Smokey Chrome
PC = Polished Chrome
W = White
Z = Black

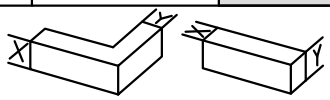

Image	Part Code	Pack	Unit	Application	Colour	
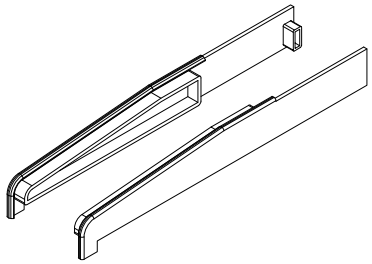	**ACET179** **PVC End Cap**	10	Pair	ETC479	MF	
					SA	
					KL	
					HP	
					SSC	
					SMC	
					W	✓
					Z	✓
					PC	
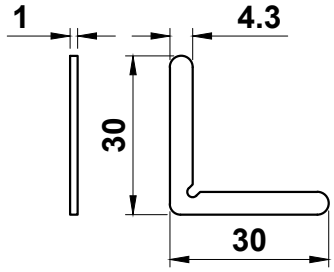	**ACET311** **Stainless Steel Chevron**	50	Pack	ETC4021 ETC4028	MF	✓
					SA	
					KL	
					HP	
					SSC	
					SMC	
					W	
					Z	
					PC	
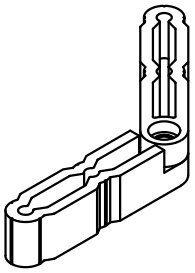	**ACET440** **Variable Cill Angle Bracket**	10	Pack		MF	✓
					SA	
					KL	
					HP	
					SSC	
					SMC	
					W	
					Z	
					PC	
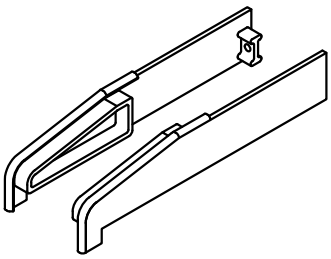	**ACET457** **Cast End Cap**	1	Pair	ETC457	MF	✓
					SA	
					KL	✓
					HP	✓
					SSC	
					SMC	
					W	
					Z	✓
					PC	✓
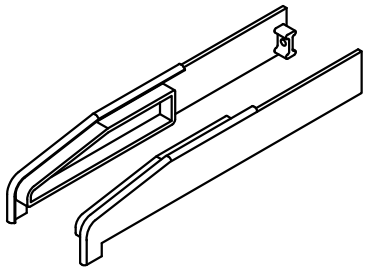	**ACET458** **Cast End Cap**	1	Pair	ETC458	MF	✓
					SA	
					KL	✓
					HP	✓
					SSC	
					SMC	
					W	
					Z	✓
					PC	✓

T-BARS
ACVG65=2.5mm
ACVG66=3.0mm
ACVL150=4.0mm

Screw (Grub)

MF = Mill Finish
SA = Silver Anodised
KL = Basic Colour
HP = Special Colour
SSC = Smooth Satin Chrome
SMC = Smokey Chrome
PC = Polished Chrome
W = White
Z = Black

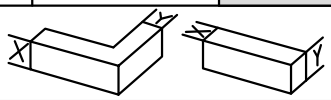

Image	Part Code	Pack	Unit	Application	Colour	
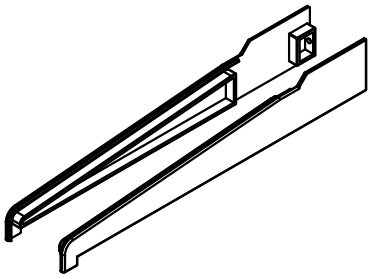	ACET477 Cast End Cap	1	pair	ETC477	MF	✓
					SA	
					KL	✓
					HP	✓
					SSC	
					SMC	
					W	
					Z	✓
					PC	✓
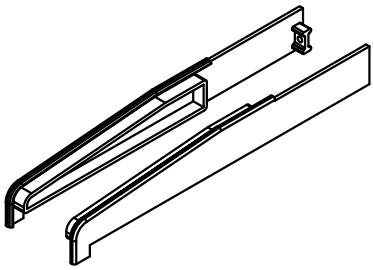	ACET479 Cast End Cap	1	pair	ETC479	MF	✓
					SA	
					KL	✓
					HP	✓
					SSC	
					SMC	
					W	
					Z	✓
					PC	✓
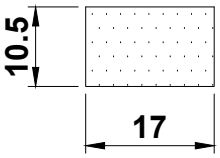	ACET555 Foam Length = 1250mm	1	Each	ETC4028	MF	✓
					SA	
					KL	
					HP	
					SSC	
					SMC	
					W	
					Z	
					PC	
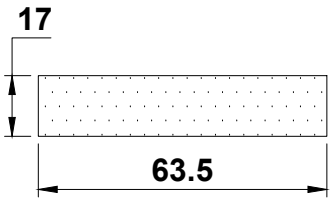	ACET619 Foam Length = 1250mm	1	Each	ETC4014 ETC4018	MF	✓
					SA	
					KL	
					HP	
					SSC	
					SMC	
					W	
					Z	
					PC	
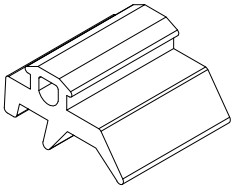	ACET842 3mm Low Line External Gasket	200	m	ETC4011 ETC4016 ETC4021 ETC4028 ETC4031 ETC4036	MF	
					SA	
					KL	
					HP	
					SSC	
					SMC	
					W	
					Z	✓
					PC	

T-BARS
ACVG65=2.5mm
ACVG66=3.0mm
ACVL150=4.0mm

Screw (Grub)

MF	= Mill Finish	W	= White
SA	= Silver Anodised	Z	= Black
KL	= Basic Colour		
HP	= Special Colour		
SSC	= Smooth Satin Chrome		
SMC	= Smokey Chrome		
PC	= Polished Chrome		

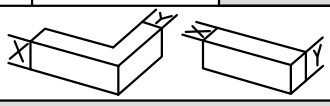

Image	Part Code	Pack	Unit	Application	Colour	
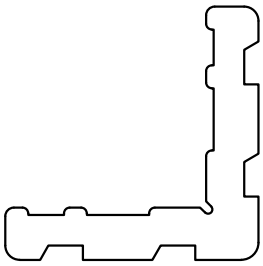	**ACET4021A** **Crimping Cleat**	**24**	**Pack**	**ETC4021**	MF	✓
					SA	
					KL	
					HP	
					SSC	
					SMC	
					W	
					Z	
					PC	
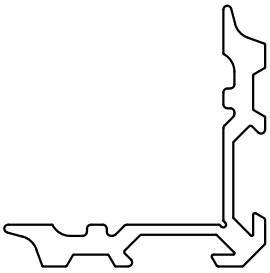	**ACET4021B** **Crimping Cleat**	**24**	**Pack**	**ETC4021**	MF	✓
					SA	
					KL	
					HP	
					SSC	
					SMC	
					W	
					Z	
					PC	
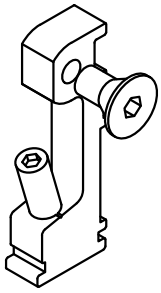	**ACET4040** **Transom Cleat**	**24**	**Pack**	**ETC4031** **ETC4036**	MF	✓
					SA	
					KL	
					HP	
					SSC	
					SMC	
					W	
					Z	
					PC	
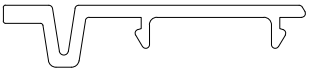	**ACET4041** **Bridge Packer**	**12**	**Pack**	**ETC4031**	MF	
					SA	
					KL	
					HP	
					SSC	
					SMC	
					W	
					Z	
					PC	
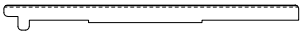 **PAGE**	**ACET4042** **Bridge Packer**	**12**	**Pack**	**ETC4021** **ETC4028**	MF	✓
					SA	
					KL	
					HP	
					SSC	
					SMC	
					W	
					Z	
					PC	

T-BARS
ACVG65=2.5mm
ACVG66=3.0mm
ACVL150=4.0mm

Screw (Grub)

MF = Mill Finish
SA = Silver Anodised
KL = Basic Colour
HP = Special Colour
SSC = Smooth Satin Chrome
SMC = Smokey Chrome
PC = Polished Chrome
W = White
Z = Black

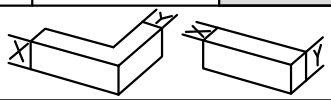

ISSUED : June 2025

Image	Part Code	Pack	Unit	Application	Colour	
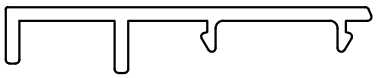	ACET4043	12	Pack	ETC4016 ETC4018 ETC4036	MF	
					SA	
					KL	
					HP	
					SSC	
					SMC	
					W	
					Z	
					PC	
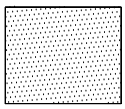	ACET4051 Foam Length = 1250mm	1	Each	ETC4011 ETC4014 ETC4016 ETC4018	MF	✓
					SA	
					KL	
					HP	
					SSC	
					SMC	
					W	
					Z	
					PC	
	ACET4053 Foam Length = 1250mm	1	Each	ETC4021 ETC4028	MF	✓
					SA	
					KL	
					HP	
					SSC	
					SMC	
					W	
					Z	
					PC	
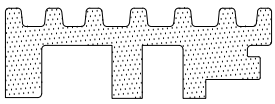	ACET4056 Foam	150	M	ETC4011 ETC4014 ETC4016 ETC4018 ETC4031 ETC4036	MF	✓
					SA	
					KL	
					HP	
					SSC	
					SMC	
					W	
					Z	
					PC	
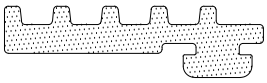	ACET4059 Foam	150	M	ETC4021 ETC4028	MF	✓
					SA	
					KL	
					HP	
					SSC	
					SMC	
					W	
					Z	
					PC	

T-BARS
ACVG65=2.5mm
ACVG66=3.0mm
ACVL150=4.0mm

Screw (Grub)

MF	= Mill Finish	W	= White
SA	= Silver Anodised	Z	= Black
KL	= Basic Colour		
HP	= Special Colour		
SSC	= Smooth Satin Chrome		
SMC	= Smokey Chrome		
PC	= Polished Chrome		

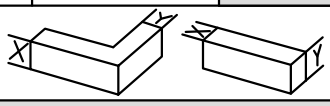

Image	Part Code	Pack	Unit	Application	Colour
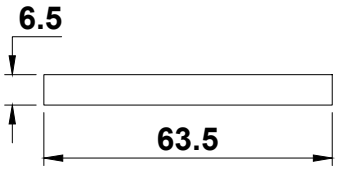	**ACET4070** **Foam** **Length = 1250mm**	**1**	**Each**	**ETC4011** **ETC4016**	MF ✓ SA KL HP SSC SMC W Z PC
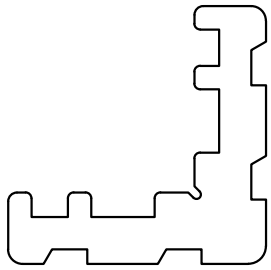	**ACET4110** **Crimping Cleat**	**24**	**Pack**	**ETC4011** **ETC4014** **ETC4016** **ETC4018**	MF ✓ SA KL HP SSC SMC W Z PC
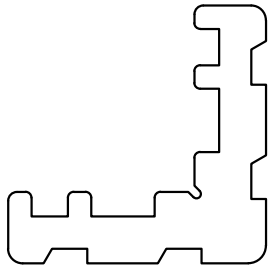	**ACET4122** **Crimping Cleat**	**24**	**Pack**	**ETC4016** **ETC4018** **ETC4028**	MF ✓ SA KL HP SSC SMC W Z PC
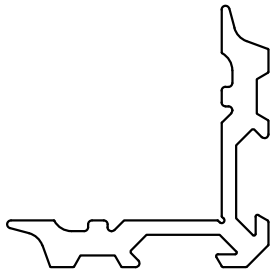	**ACET4125** **Crimping Cleat**	**24**	**Pack**	**ETC4016** **ETC4018** **ETC4028**	MF ✓ SA KL HP SSC SMC W Z PC
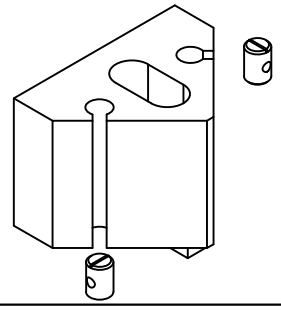	**ACET3950** **VEE Block**	**1**	**Each**	**ETC4011** **ETC4014** **ETC4016** **ETC4018** **ETC4021**	MF SA KL HP SSC SMC W Z PC

T-BARS
ACVG65=2.5mm
ACVG66=3.0mm
ACVL150=4.0mm

Screw (Grub)

MF = Mill Finish
SA = Silver Anodised
KL = Basic Colour
HP = Special Colour
SSC = Smooth Satin Chrome
SMC = Smokey Chrome
PC = Polished Chrome
W = White
Z = Black

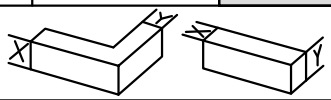

Image	Part Code	Pack	Unit	Application	Colour
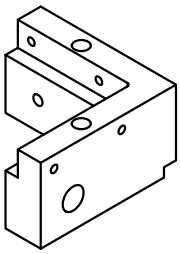	**ACET3951** **VEE Packer**	**1**	**Each**	**ETC4011** **ETC4014** **ETC4016** **ETC4018** **ETC4021** **ETC4028**	MF SA KL HP SSC SMC W Z PC
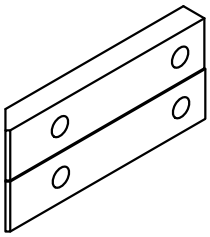	**ACET3952** **Nylon Packer**	**1**	**Each**	**ETC4011** **ETC4014** **ETC4016** **ETC4018** **ETC4021** **ETC4028**	MF SA KL HP SSC SMC W Z PC
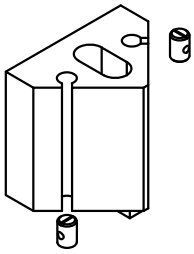	**ACET3964** **Vee Block**	**1**	**Each**	**ETC4011** **ETC4014** **ETC4016** **ETC4018** **ETC4028**	MF SA KL HP SSC SMC W Z PC
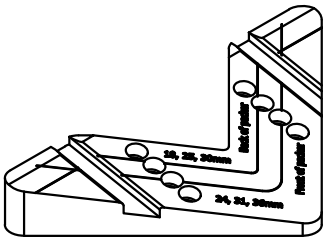	**ACET4381** **Adjustable Packer**	**1**	**Each**	**ETC4011** **ETC4014** **ETC4016** **ETC4018** **ETC4021** **ETC4028**	MF SA KL HP SSC SMC W Z PC
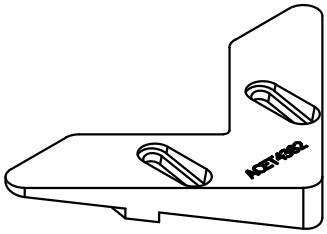	**ACET4382** **Adjustable Packer**	**1**	**Each**	**ETC4028**	MF SA KL HP SSC SMC W Z PC

T-BARS
ACVG65=2.5mm
ACVG66=3.0mm
ACVL150=4.0mm

Screw (Grub)

MF = Mill Finish
SA = Silver Anodised
KL = Basic Colour
HP = Special Colour
SSC = Smooth Satin Chrome
SMC = Smokey Chrome
PC = Polished Chrome
W = White
Z = Black

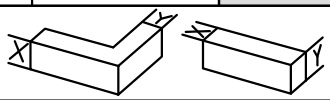

Image	Part Code	Pack	Unit	Application	Colour	
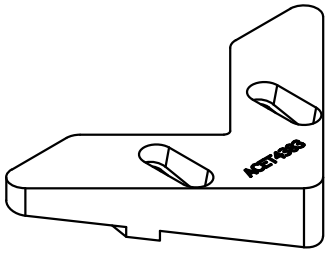	**ACET4383** **Adjustable Packer**	**1**	**Each**	**ETC4011** **ETC4014** **ETC4016** **ETC4018** **ETC4021**	MF SA KL HP SSC SMC W Z PC	
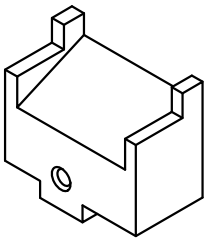	**ACET4394N** **Punches**	**1**	**Each**	**ETC4021** **ETC4028**	MF SA KL HP SSC SMC W Z PC	
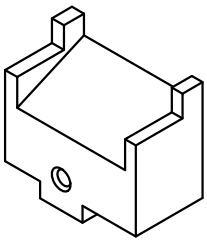	**ACET4395** **Punches**	**1**		**ETC4011** **ETC4014** **ETC4016** **ETC4018**	MF SA KL HP SSC SMC W Z PC	
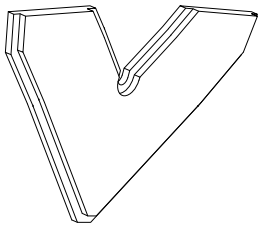	**ACVL020B** **Plastic chevron**	**100**	**pack**	**ETC4011** **ETC4014** **ETC4016** **ETC4018**	MF SA KL HP SSC SMC W Z PC	 ✓
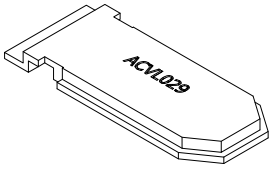	**ACVL029** **Strengthening piece**	**100**	**Pack**	**ETC4031** **ETC4036**	MF SA KL HP SSC SMC W Z PC	✓

T-BARS
ACVG65=2.5mm
ACVG66=3.0mm
ACVL150=4.0mm

Screw (Grub)

MF	**= Mill Finish**	**W**	**= White**
SA	**= Silver Anodised**	**Z**	**= Black**
KL	**= Basic Colour**		
HP	**= Special Colour**		
SSC	**= Smooth Satin Chrome**		
SMC	**= Smokey Chrome**		
PC	**= Polished Chrome**		

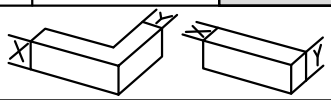

Image	Part Code	Pack	Unit	Application	Colour	
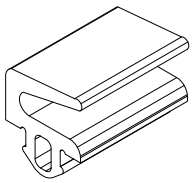	**ACVL031** **EPDM Flipper Gasket**	**100**	**m**	**ETC4021** **ETC4028**	MF SA KL HP SSC SMC W Z PC	 ✓
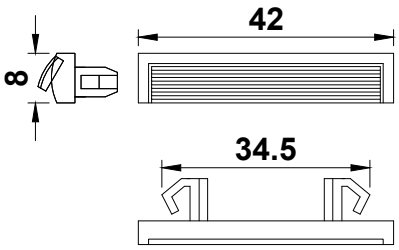	**ACGSL045** **Drainage Cap**	**100**	**Pack**	**ETC4011** **ETC4014** **ETC4016** **ETC4018**	MF SA KL HP SSC SMC W Z PC	 ✓ ✓
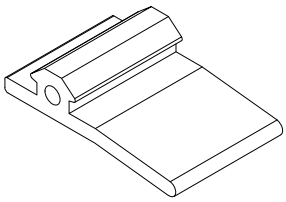	**ACW20131** **Outer Frame External Gasket**	**100**	**m**	**ETC4011** **ETC4014** **ETC4016** **ETC4018** **ETC4031** **ETC4036**	MF SA KL HP SSC SMC W Z PC	 ✓
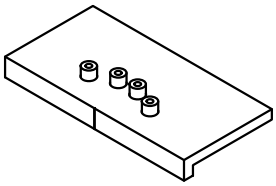	**ACET4931** **Jig mark**	**1**	**Each**	**ETC4031**	MF SA KL HP SSC SMC W Z PC	
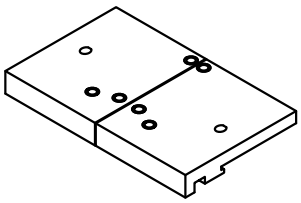	**ACET4932** **Jig mark**	**1**	**Each**	**ETC4036**	MF SA KL HP SSC SMC W Z PC	

T-BARS
ACVG65=2.5mm
ACVG66=3.0mm
ACVL150=4.0mm

Screw (Grub)

MF	**= Mill Finish**	**W**	**= White**
SA	**= Silver Anodised**	**Z**	**= Black**
KL	**= Basic Colour**		
HP	**= Special Colour**		
SSC	**= Smooth Satin Chrome**		
SMC	**= Smokey Chrome**		
PC	**= Polished Chrome**		

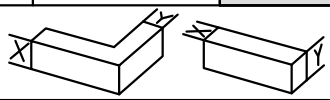

Alitherm 400 Tilt & Turn

ACCESSORIES : PHOTOS & DRAWINGS

Image	Part Code	Pack	Unit	Application	Colour	
					MF	
					SA	
					KL	
					HP	
					SSC	
					SMC	
					W	
					Z	
					PC	
					MF	
					SA	
					KL	
					HP	
					SSC	
					SMC	
					W	
					Z	
					PC	
					MF	
					SA	
					KL	
					HP	
					SSC	
					SMC	
					W	
					Z	
					PC	
					MF	
					SA	
					KL	
					HP	
					SSC	
					SMC	
					W	
					Z	
					PC	
					MF	
					SA	
					KL	
					HP	
					SSC	
					SMC	
					W	
					Z	
					PC	

T-BARS
ACVG65=2.5mm
ACVG66=3.0mm
ACVL150=4.0mm

Screw (Grub)

MF = Mill Finish
SA = Silver Anodised
KL = Basic Colour
HP = Special Colour
SSC = Smooth Satin Chrome
SMC = Smokey Chrome
PC = Polished Chrome
W = White
Z = Black

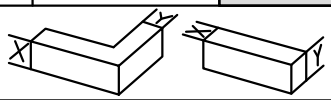

ISSUED : June 2025

Image	Part Code	Pack	Unit	Application	Colour	
	**ACMX09700** **Alu. Polish**	**1**	**each**		MF	✓
					SA	
					KL	
					HP	
					SSC	
					SMC	
					W	
					Z	
					PC	
	**ACMX09761** **Maxi Gloss**	**1**	**each**		MF	
					SA	
					KL	
					HP	
					SSC	
					SMC	
					W	
					Z	
					PC	
	**ACMX09762** **Alu. Bright**	**1**	**each**		MF	
					SA	
					KL	
					HP	
					SSC	
					SMC	
					W	
					Z	
					PC	
	**ACMX09763** **Teflon Spray**	**1**	**each**		MF	
					SA	
					KL	
					HP	
					SSC	
					SMC	
					W	
					Z	
					PC	
	**ACMX09764** **Maxi Clean**	**1**	**each**		MF	
					SA	
					KL	
					HP	
					SSC	
					SMC	
					W	
					Z	
					PC	

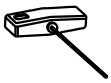

T-BARS
ACVG65=2.5mm
ACVG66=3.0mm
ACVL150=4.0mm

Screw (Grub)

MF = Mill Finish
SA = Silver Anodised
KL = Basic Colour
HP = Special Colour
SSC = Smooth Satin Chrome
SMC = Smokey Chrome
PC = Polished Chrome
W = White
Z = Black

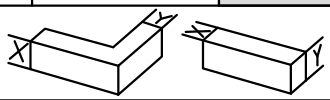

Alitherm 400 Tilt & Turn

STANDARD ACCESSORIES

Image	Part Code	Pack	Unit	Application	Colour
	**ACMX09765** **Alu. Cleaner**	1	each		MF SA KL HP SSC SMC W Z PC
	**ACMX09770** **Roll & Wrap 100mm**	1	each		MF SA KL HP SSC SMC W Z PC
	**ACMX09775** **Grip Handwrap**	1	each		MF SA KL HP SSC SMC W Z PC
	**ACMX09801** **Protective Tape 50mm**	1	each		MF SA KL HP SSC SMC W Z PC
	**ACMX09802** **Protective Tape 70mm**	1	each		MF SA KL HP SSC SMC W Z PC

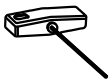

T-BARS
ACVG65=2.5mm
ACVG66=3.0mm
ACVL150=4.0mm

Screw (Grub)

MF = Mill Finish
SA = Silver Anodised
KL = Basic Colour
HP = Special Colour
SSC = Smooth Satin Chrome
SMC = Smokey Chrome
PC = Polished Chrome
W = White
Z = Black

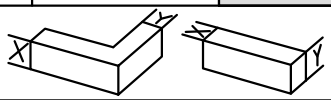

ISSUED : June 2025

Alitherm 400 Tilt & Turn

STANDARD ACCESSORIES

Image	Part Code	Pack	Unit	Application	Colour
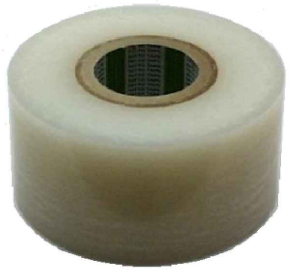	**ACMX09803** **Protective Tape 100mm**	**1**	**each**		MF SA KL HP SSC SMC W Z PC
	**ACMX09830** **Rubber Sealant**	**1**	**each**		MF SA KL HP SSC SMC W Z PC
	**ACSIL04** **Sealing Glue** **Order with suffix of KL colour (eg.ACSIL04KL005) or BL=Black/WP=White/ CL=Clear**	**1**	**each**		MF SA KL ✓ HP SSC SMC W ✓ Z ✓ PC
	**ACSIL08** **Silicon Gun**	**1**	**each**		MF SA KL HP SSC SMC W Z PC
	**ACSIL013** **Glue for Mitre**	**1**	**each**		MF SA KL HP SSC SMC W Z PC

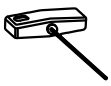

T-BARS
ACVG65=2.5mm
ACVG66=3.0mm
ACVL150=4.0mm

Screw (Grub)

MF = Mill Finish
SA = Silver Anodised
KL = Basic Colour
HP = Special Colour
SSC = Smooth Satin Chrome
SMC = Smokey Chrome
PC = Polished Chrome
W = White
Z = Black

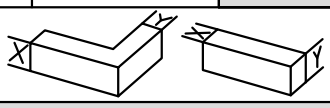

Image	Part Code	Pack	Unit	Application	Colour
	**ACSIL014** **Anti-Corrosion Coating**	**1**	**each**		MF ✓ SA KL HP SSC SMC W Z PC
	**ACUN3900** **Gasket Roller**	**1**	**each**		MF SA KL HP SSC SMC W Z PC
					MF SA KL HP SSC SMC W Z PC
					MF SA KL HP SSC SMC W Z PC
					MF SA KL HP SSC SMC W Z PC

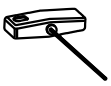

T-BARS
ACVG65=2.5mm
ACVG66=3.0mm
ACVL150=4.0mm

Screw (Grub)

MF = Mill Finish
SA = Silver Anodised
KL = Basic Colour
HP = Special Colour
SSC = Smooth Satin Chrome
SMC = Smokey Chrome
PC = Polished Chrome
W = White
Z = Black

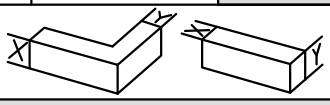

Section C

Sections

Scale Elevations

Detail

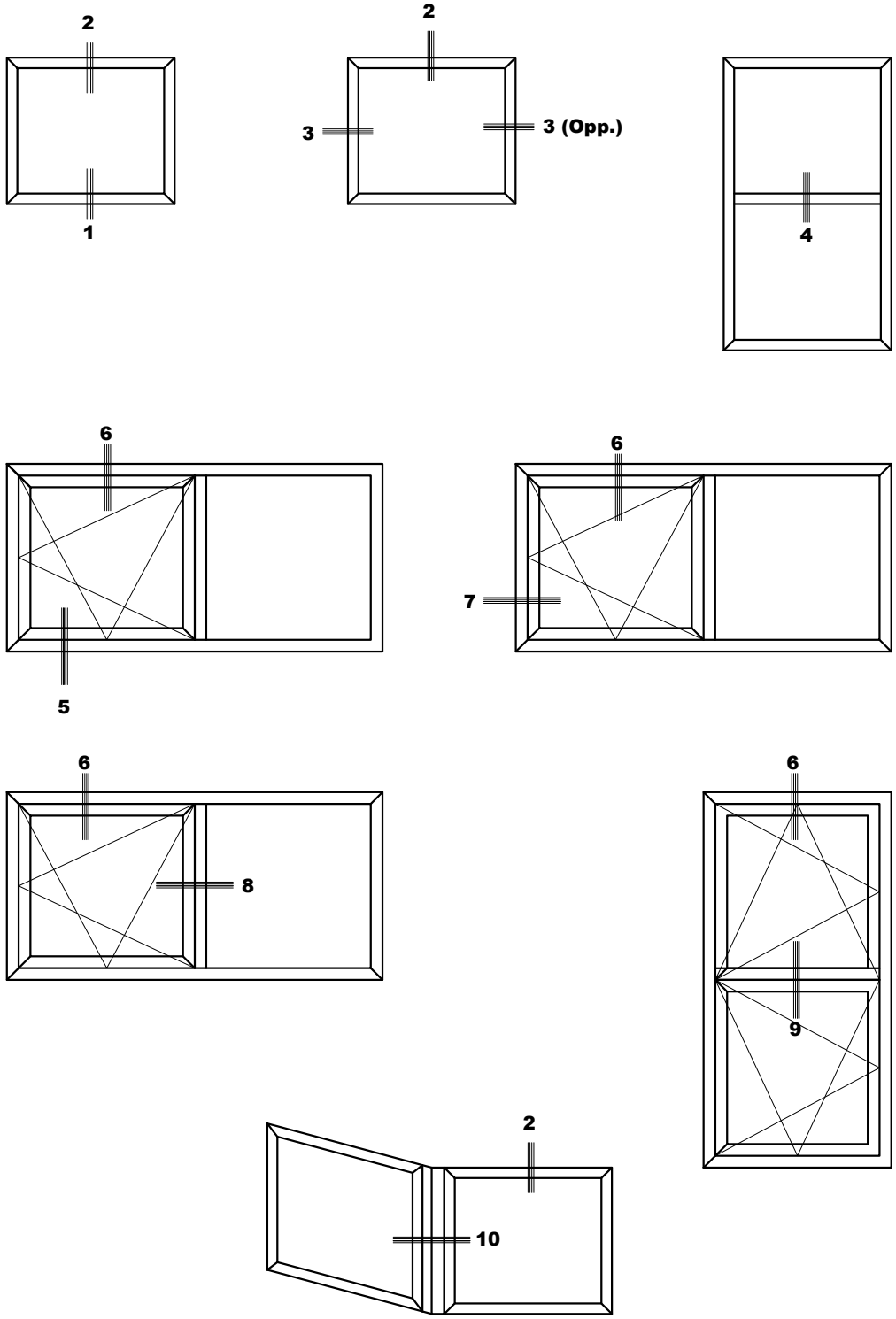

Do Not Scale From This Drawing

Detail 1A

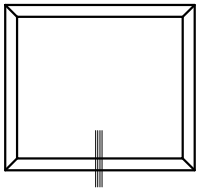

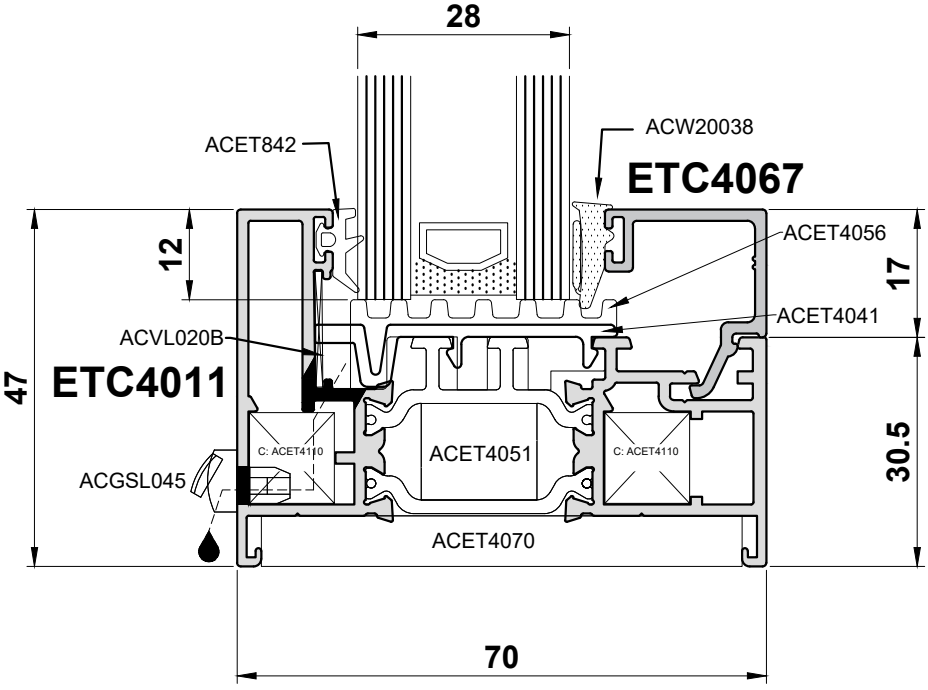

Do Not Scale From This Drawing

ISSUED : June 2025

Detail 1B

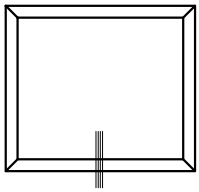

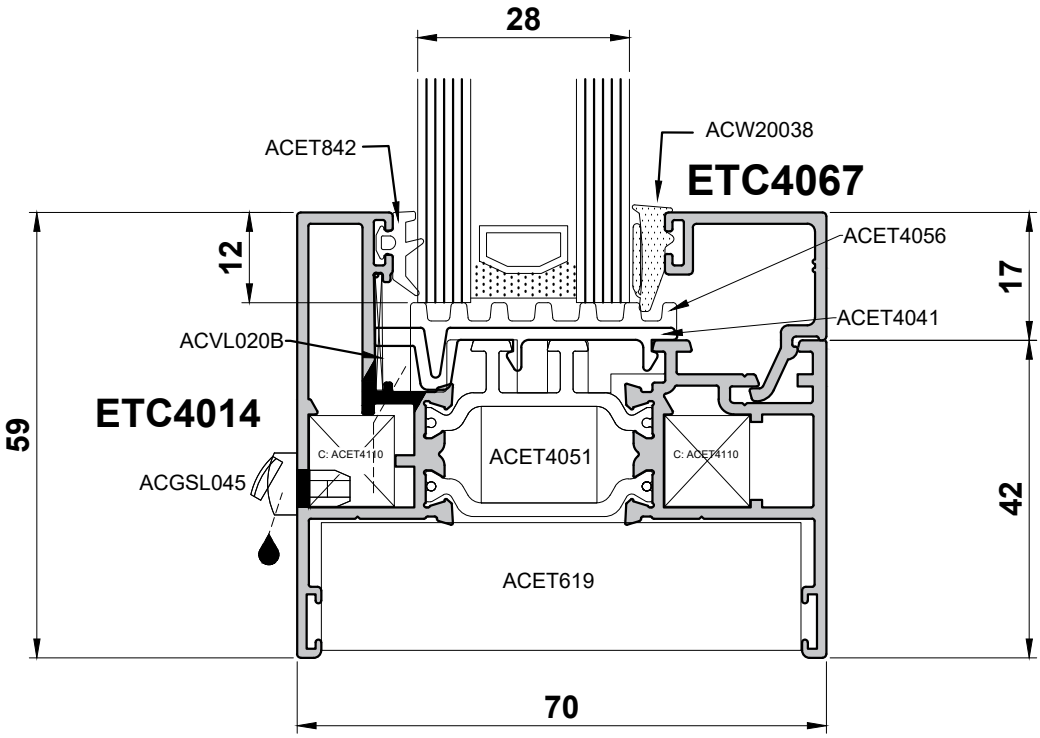

Do Not Scale From This Drawing

Detail 1C

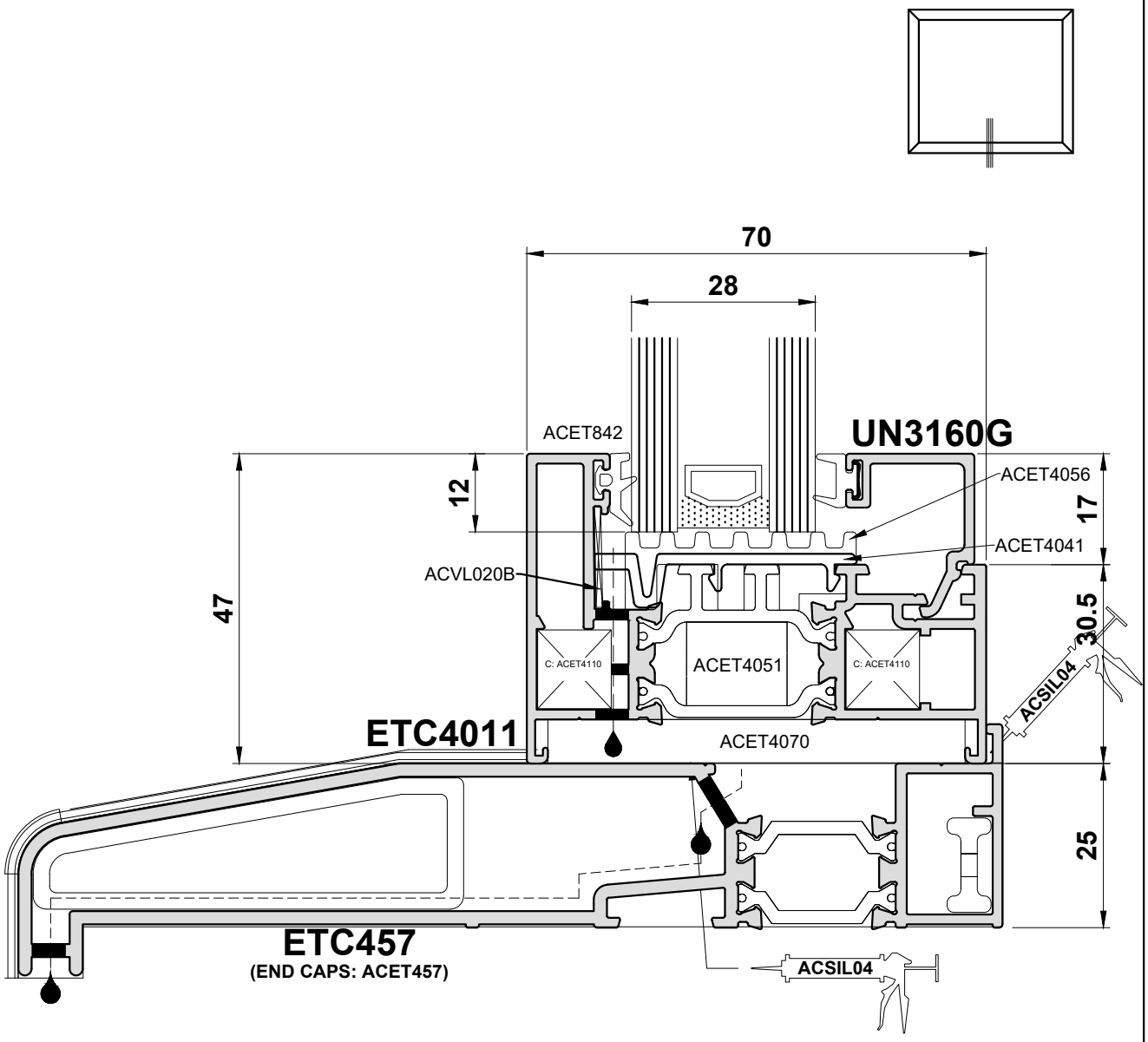

Do Not Scale From This Drawing

ISSUED : June 2025

Detail 1D

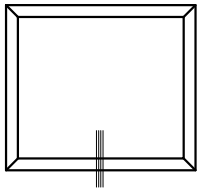

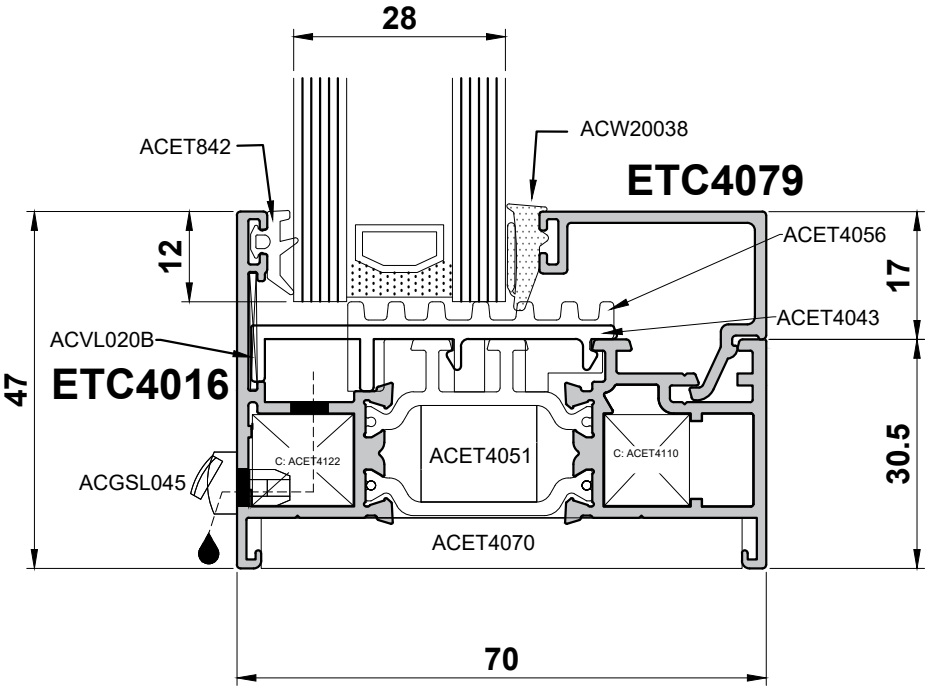

Do Not Scale From This Drawing

Detail 1E

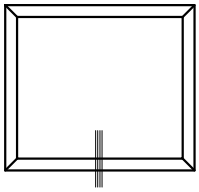

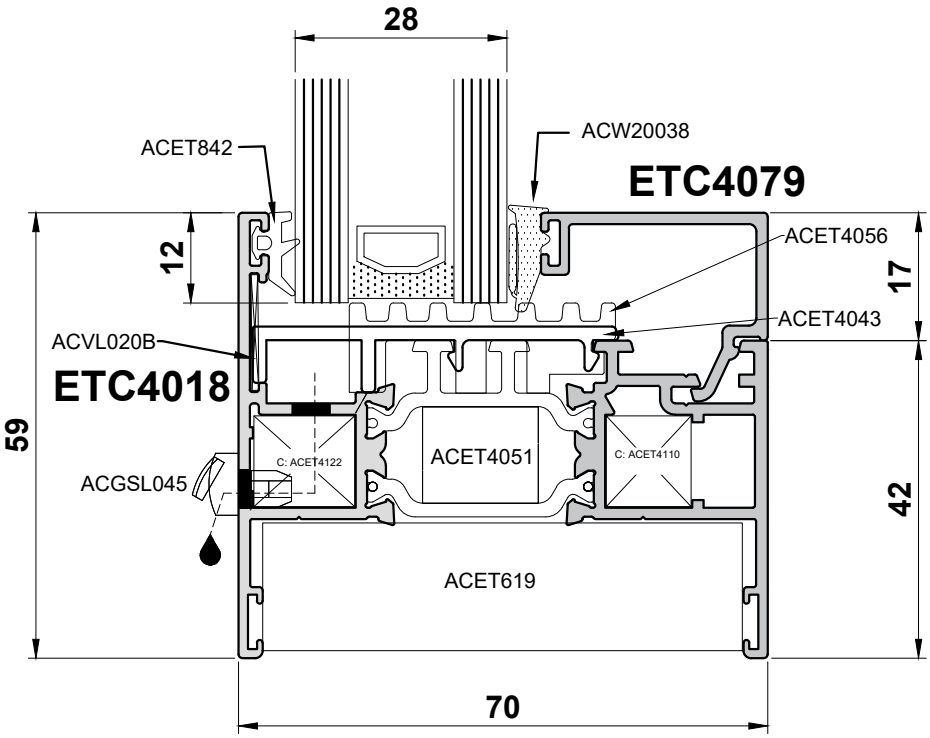

Do Not Scale From This Drawing

ISSUED : June 2025

Detail 1F

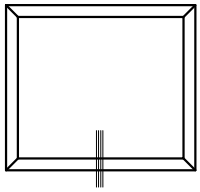

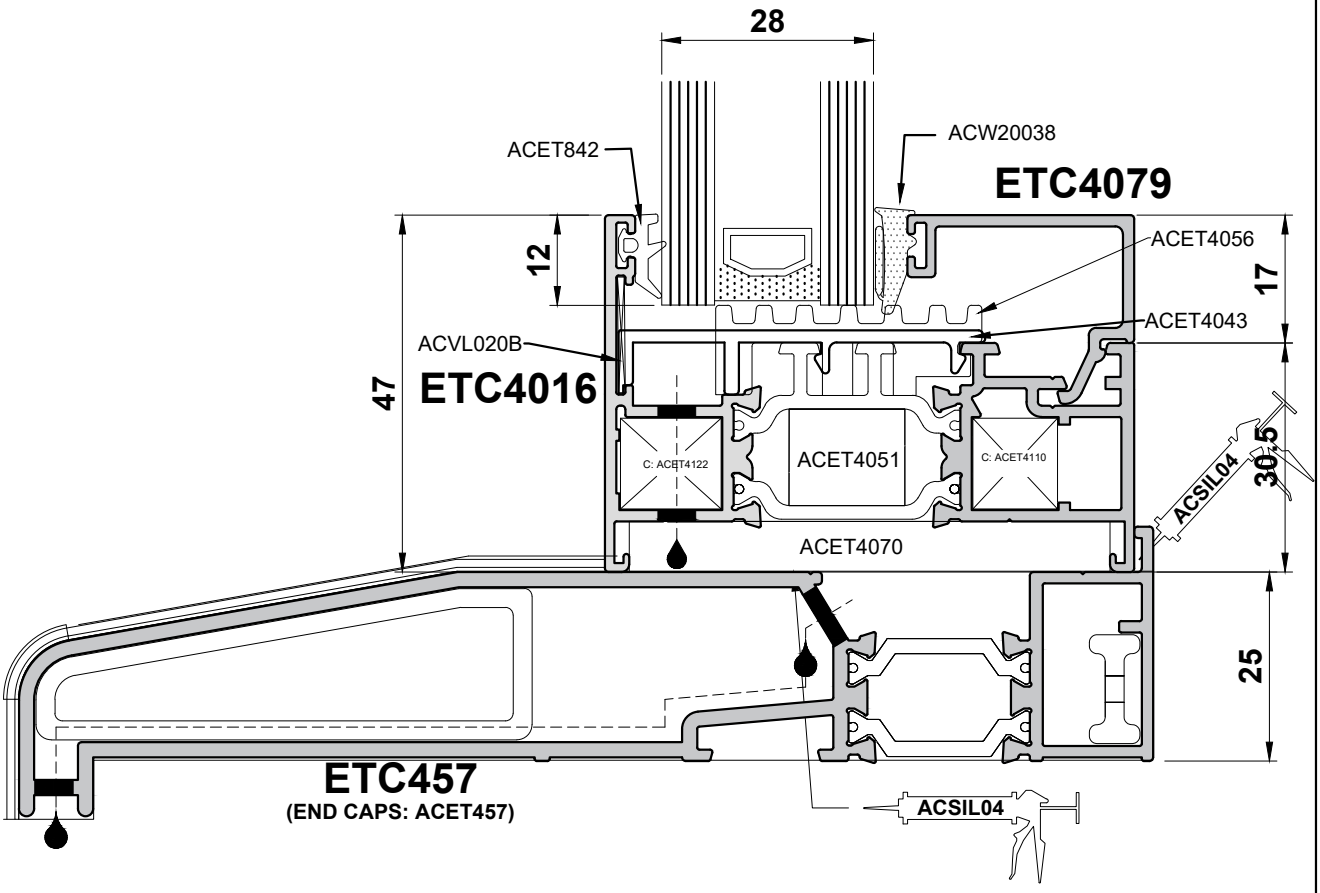

Do Not Scale From This Drawing

Detail 2A

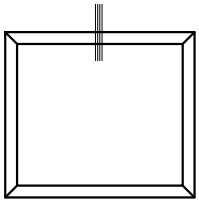

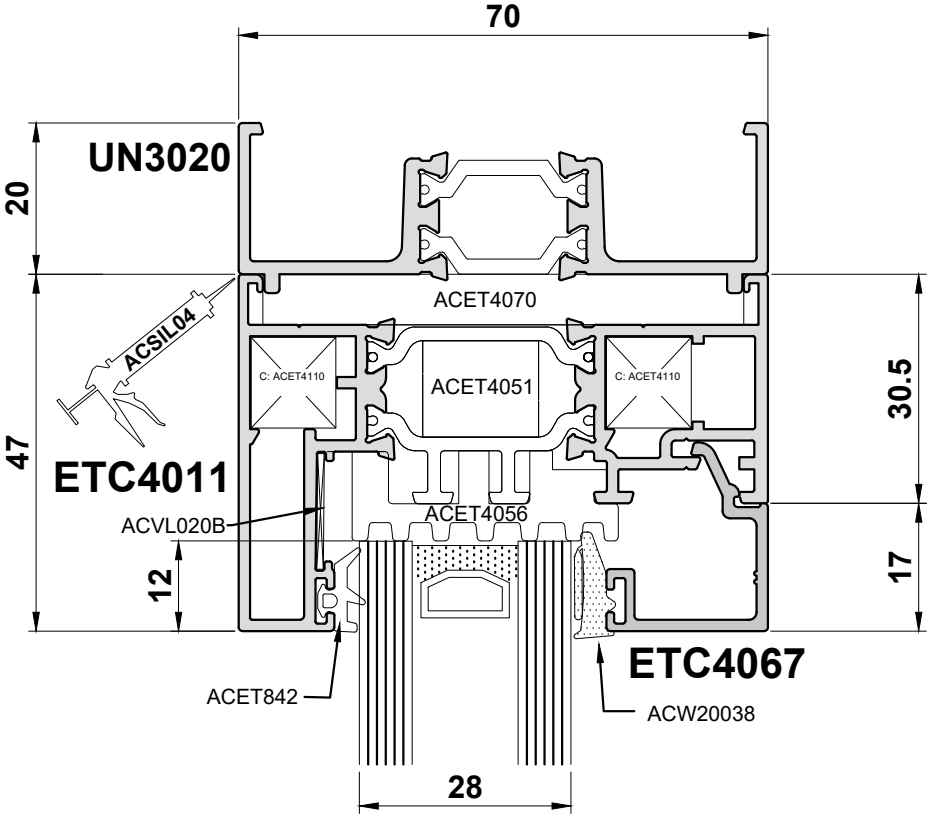

Do Not Scale From This Drawing

ISSUED : June 2025

Detail 2B

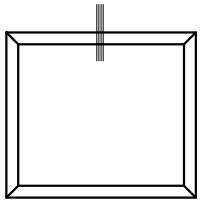

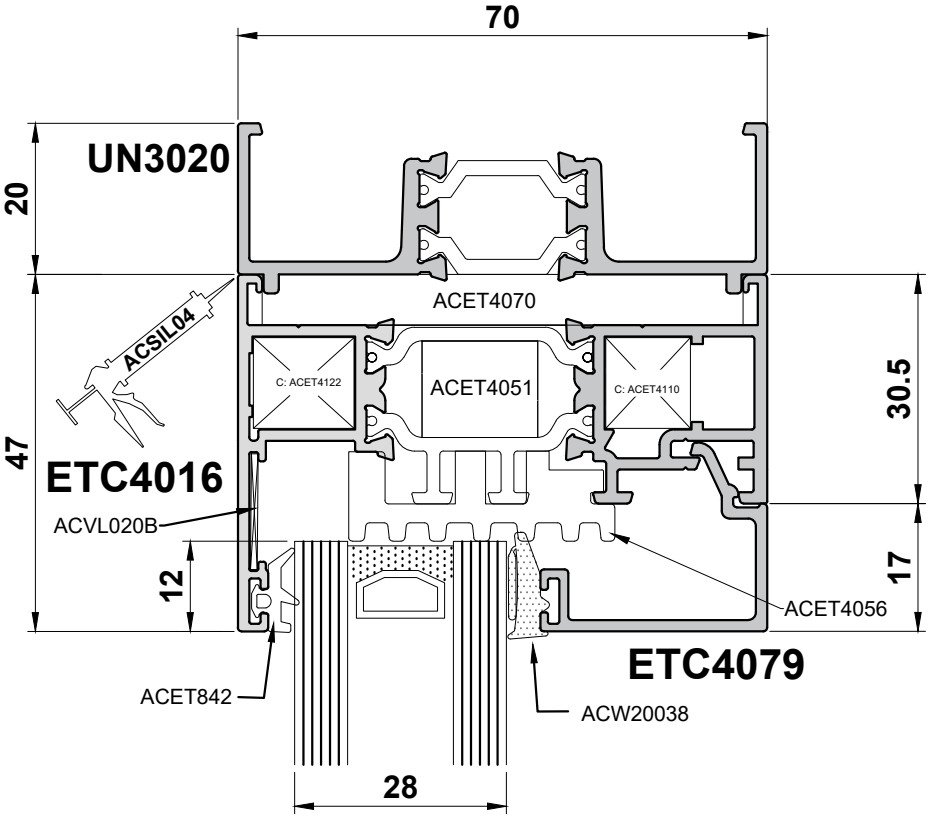

Do Not Scale From This Drawing

Detail 3A

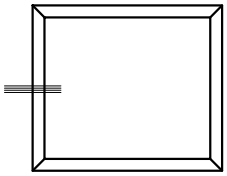

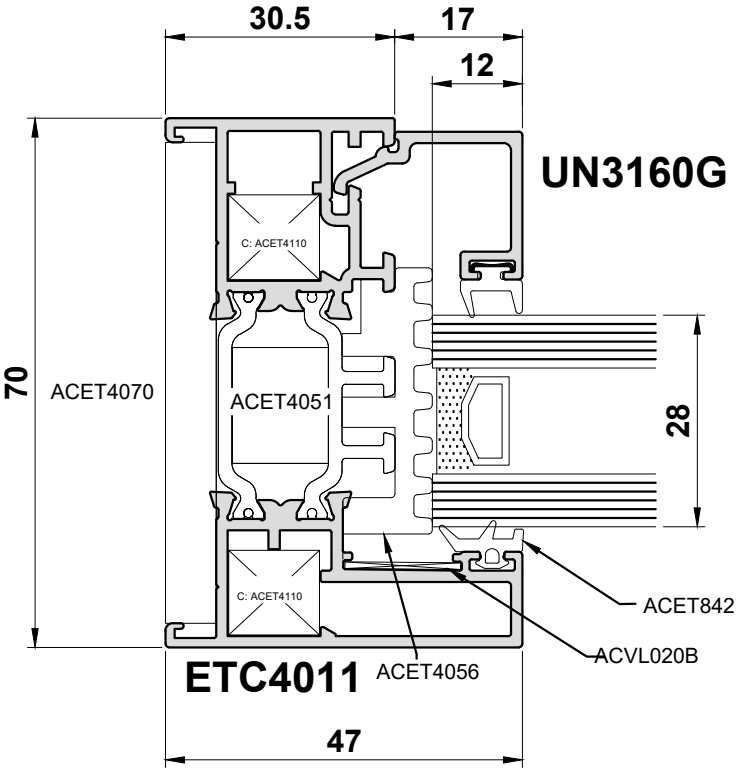

Do Not Scale From This Drawing

Detail 3B

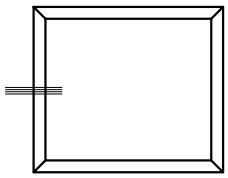

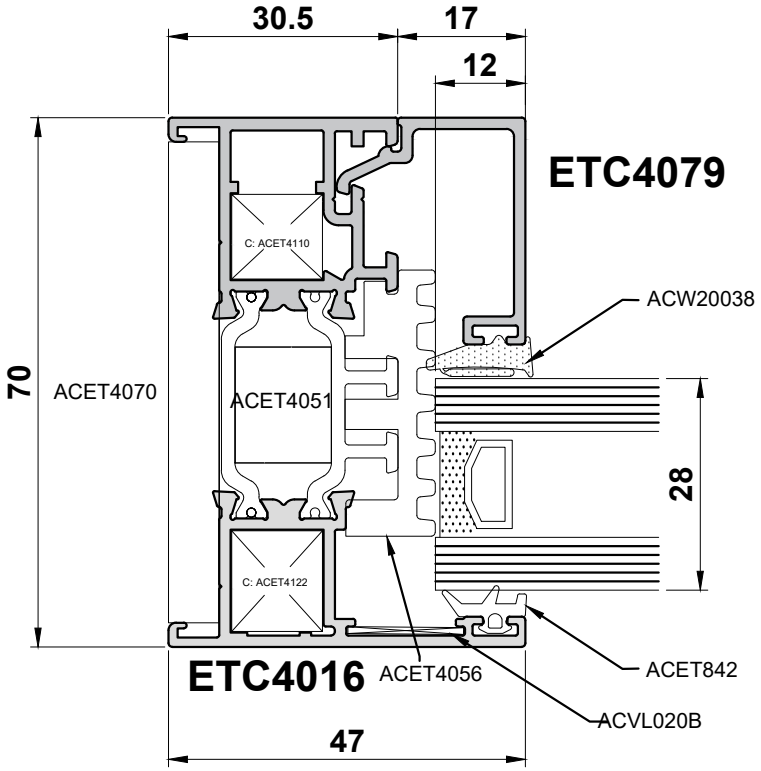

Do Not Scale From This Drawing

Detail 4A

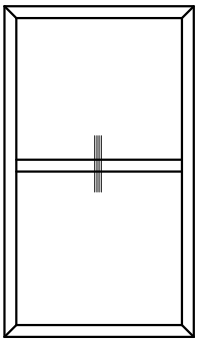

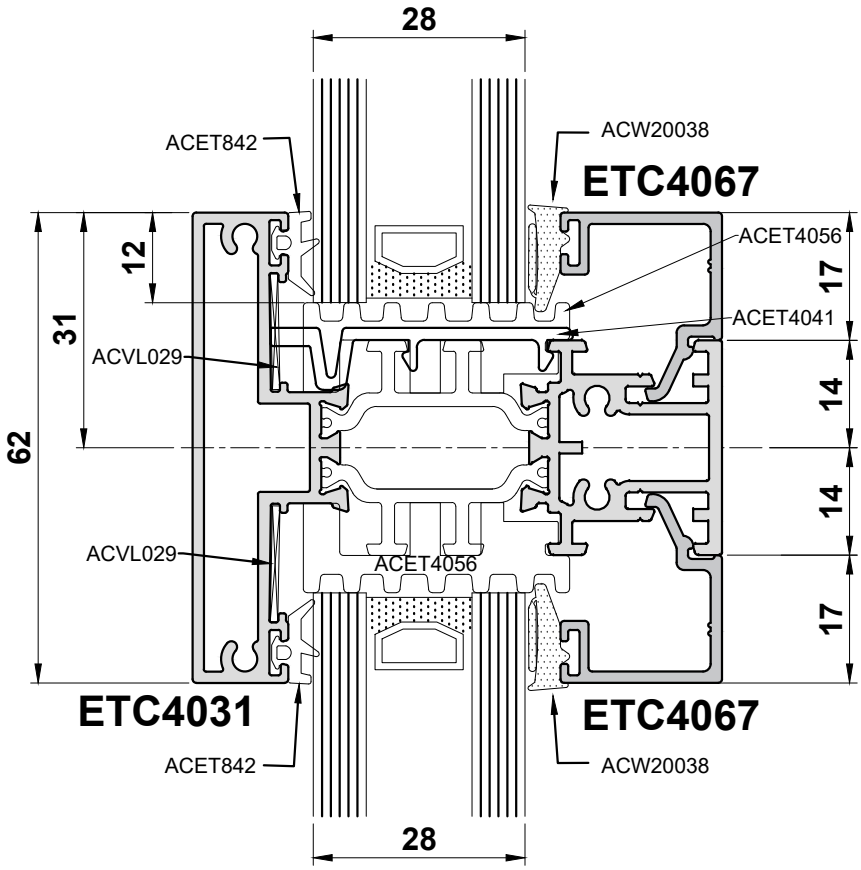

Do Not Scale From This Drawing

Alitherm 400 Tilt & Turn

Detail 4B

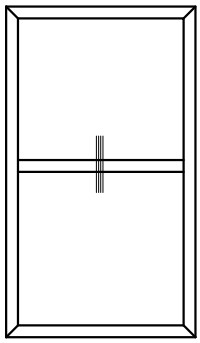

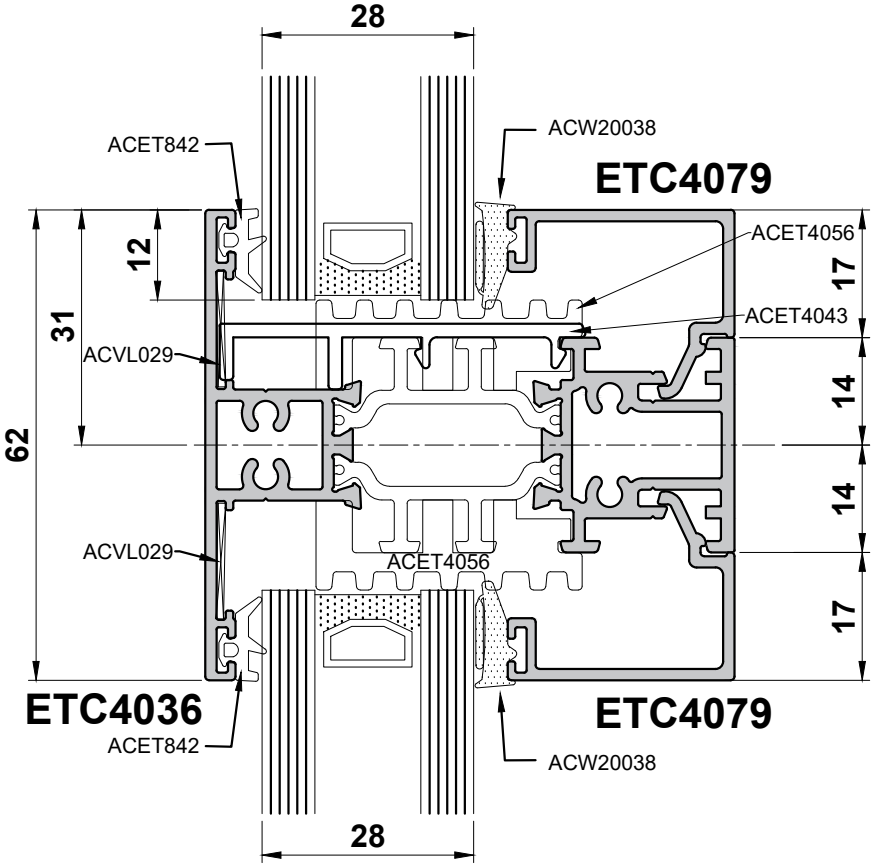

Do Not Scale From This Drawing

Detail 5A

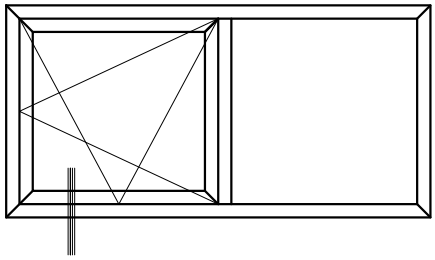

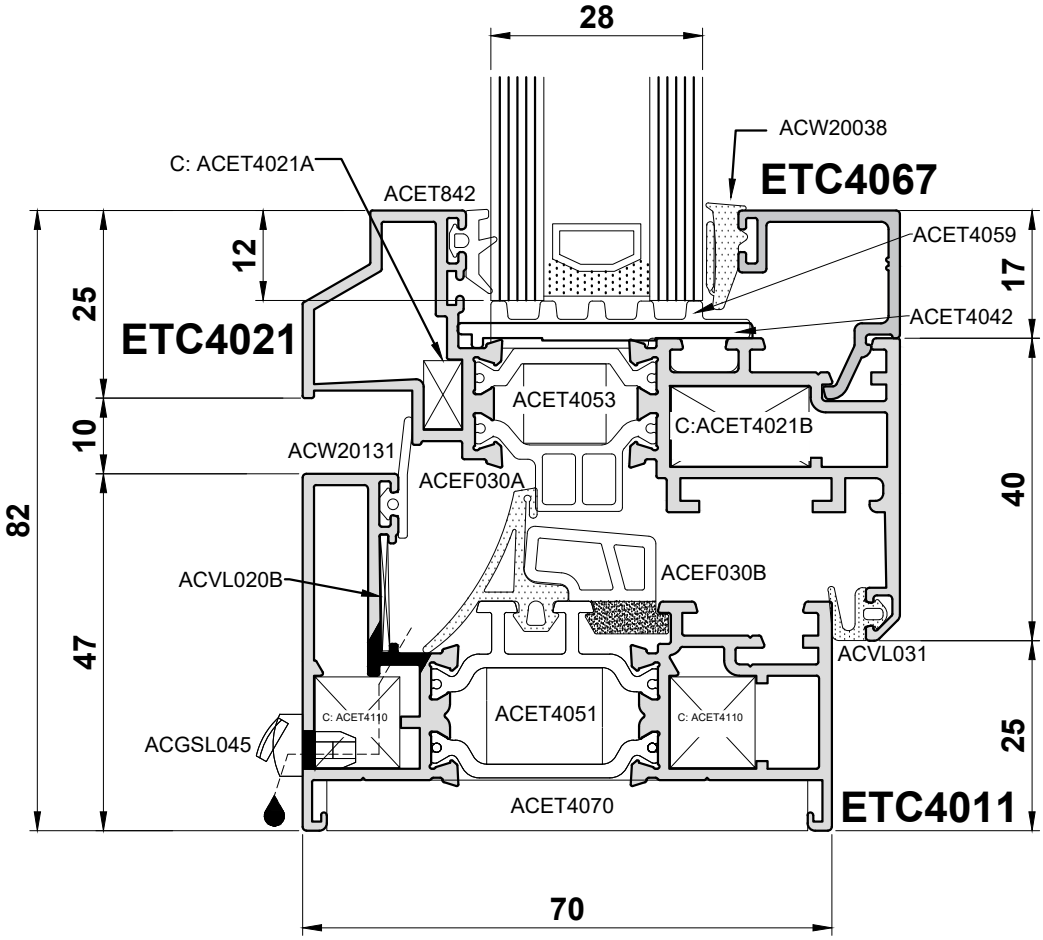

Do Not Scale From This Drawing

Detail 5B

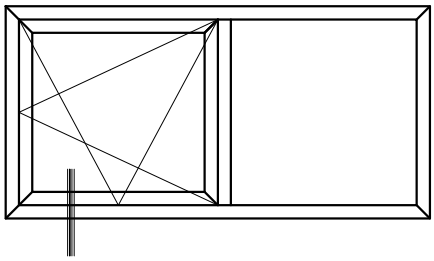

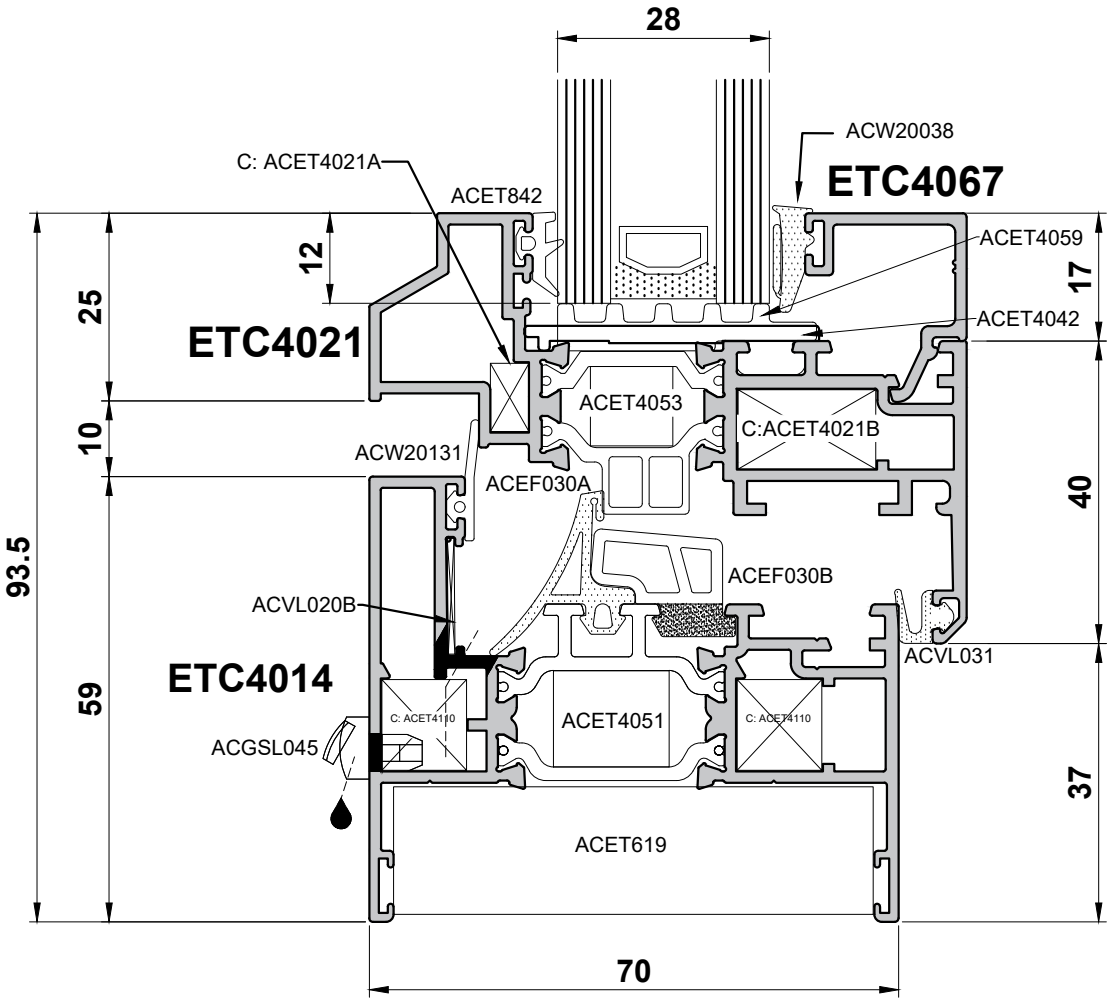

Do Not Scale From This Drawing

Detail 5C

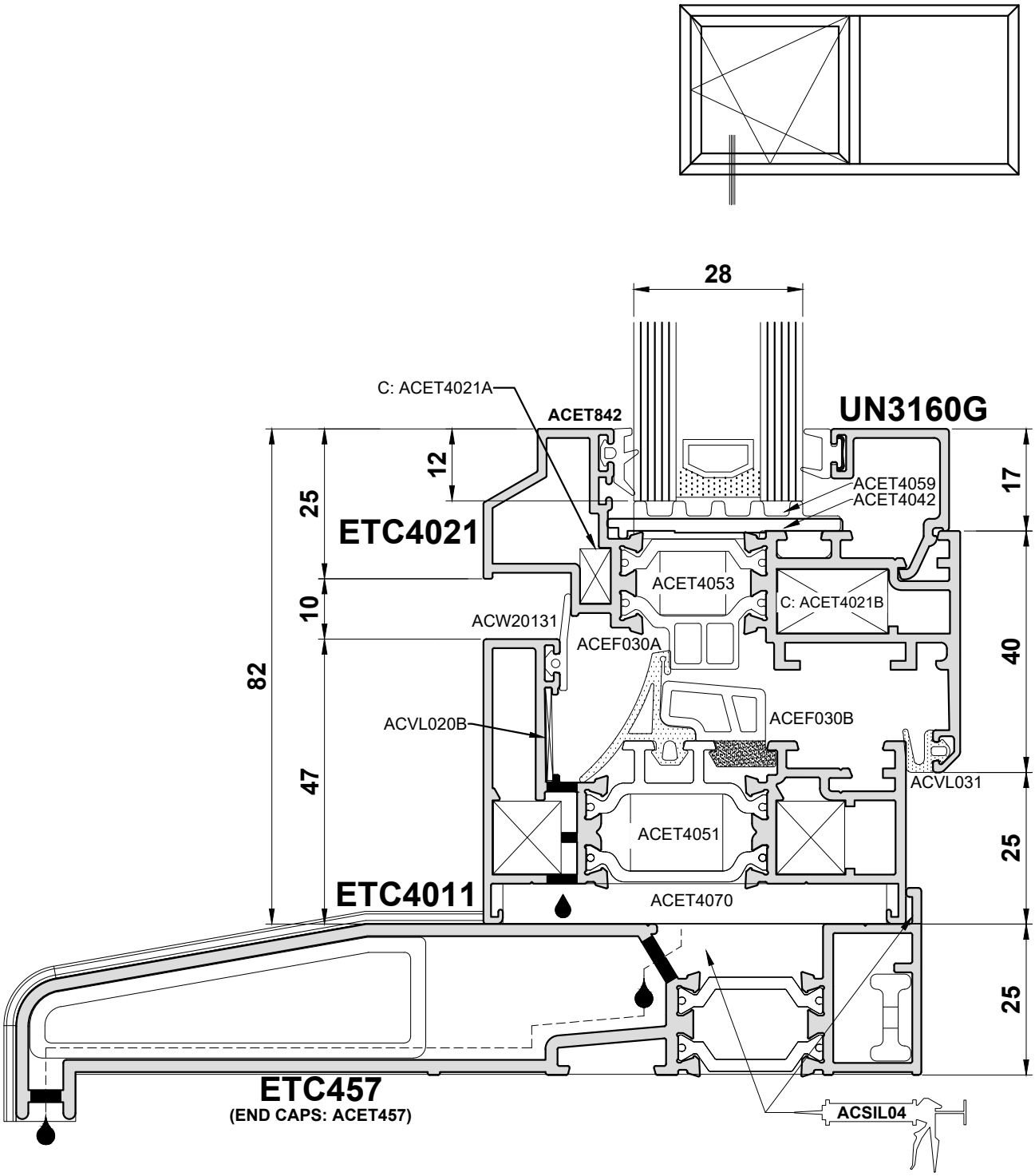

Do Not Scale From This Drawing

Alitherm 400 Tilt & Turn

Detail 5D

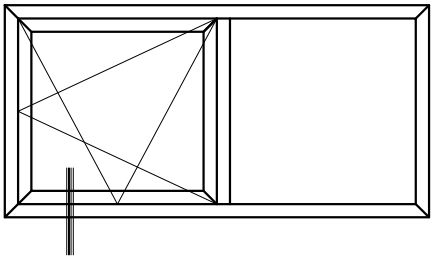

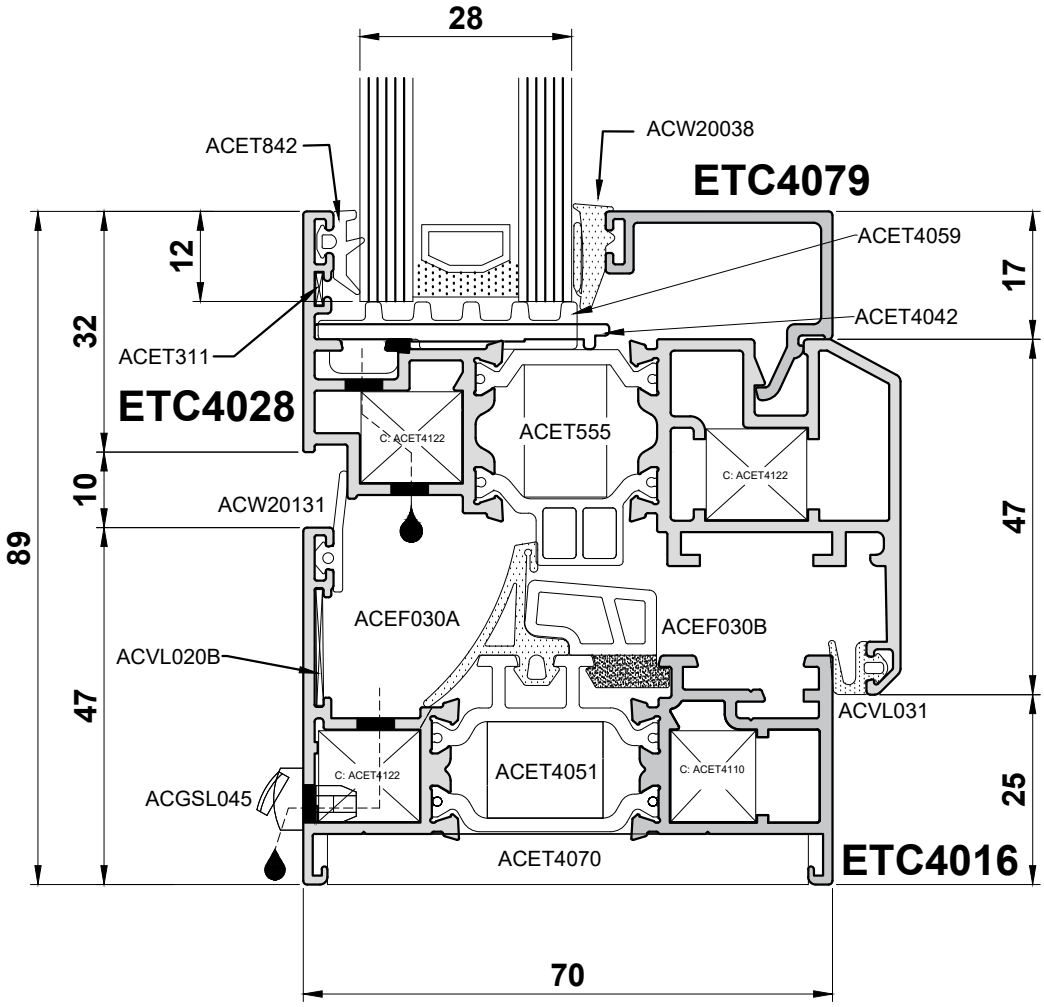

Do Not Scale From This Drawing

Alitherm 400 Tilt & Turn

Detail 5E

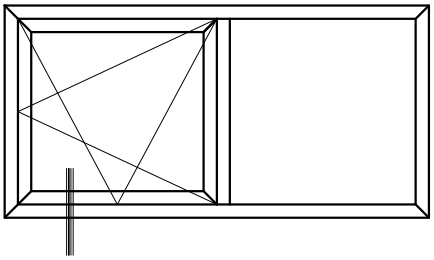

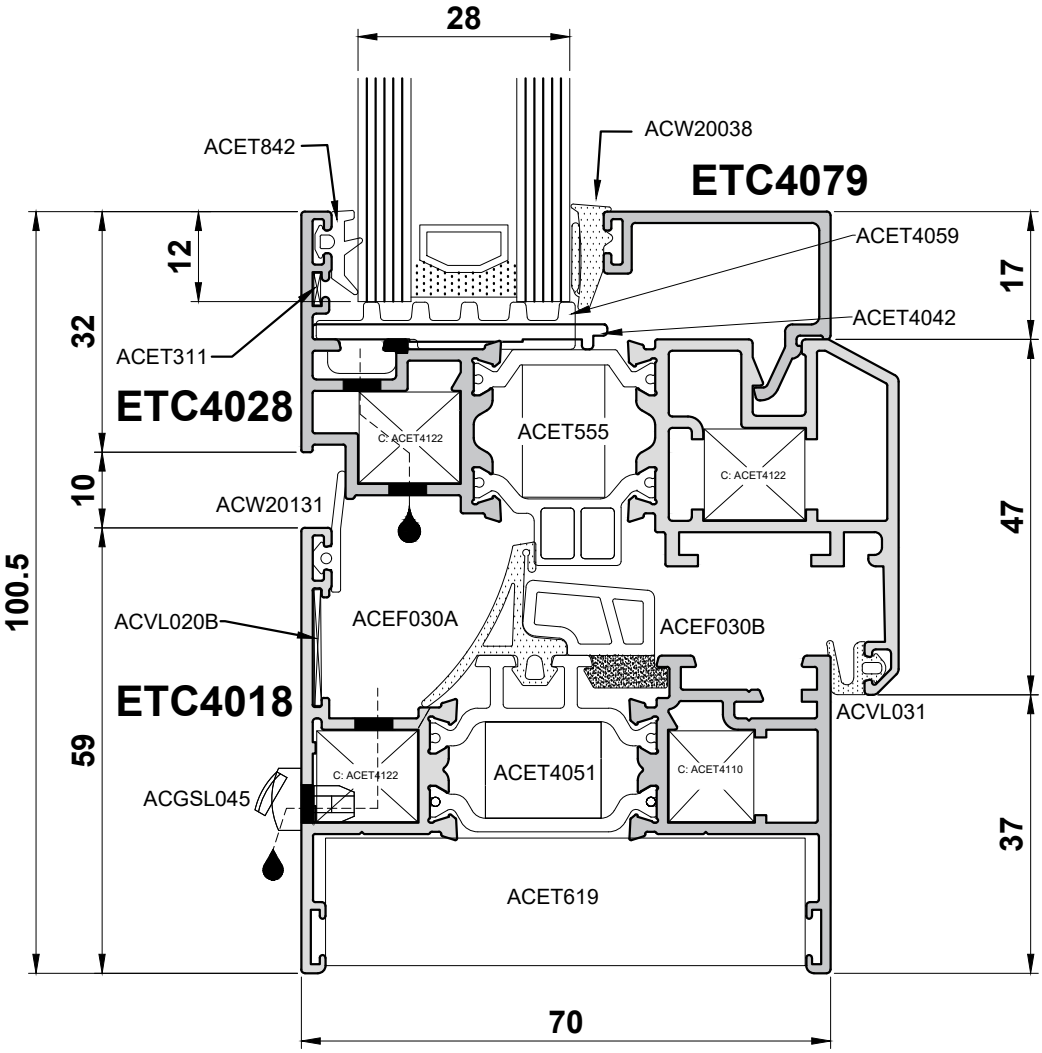

Do Not Scale From This Drawing

ISSUED : June 2025

Alitherm 400 Tilt & Turn

Detail 5F

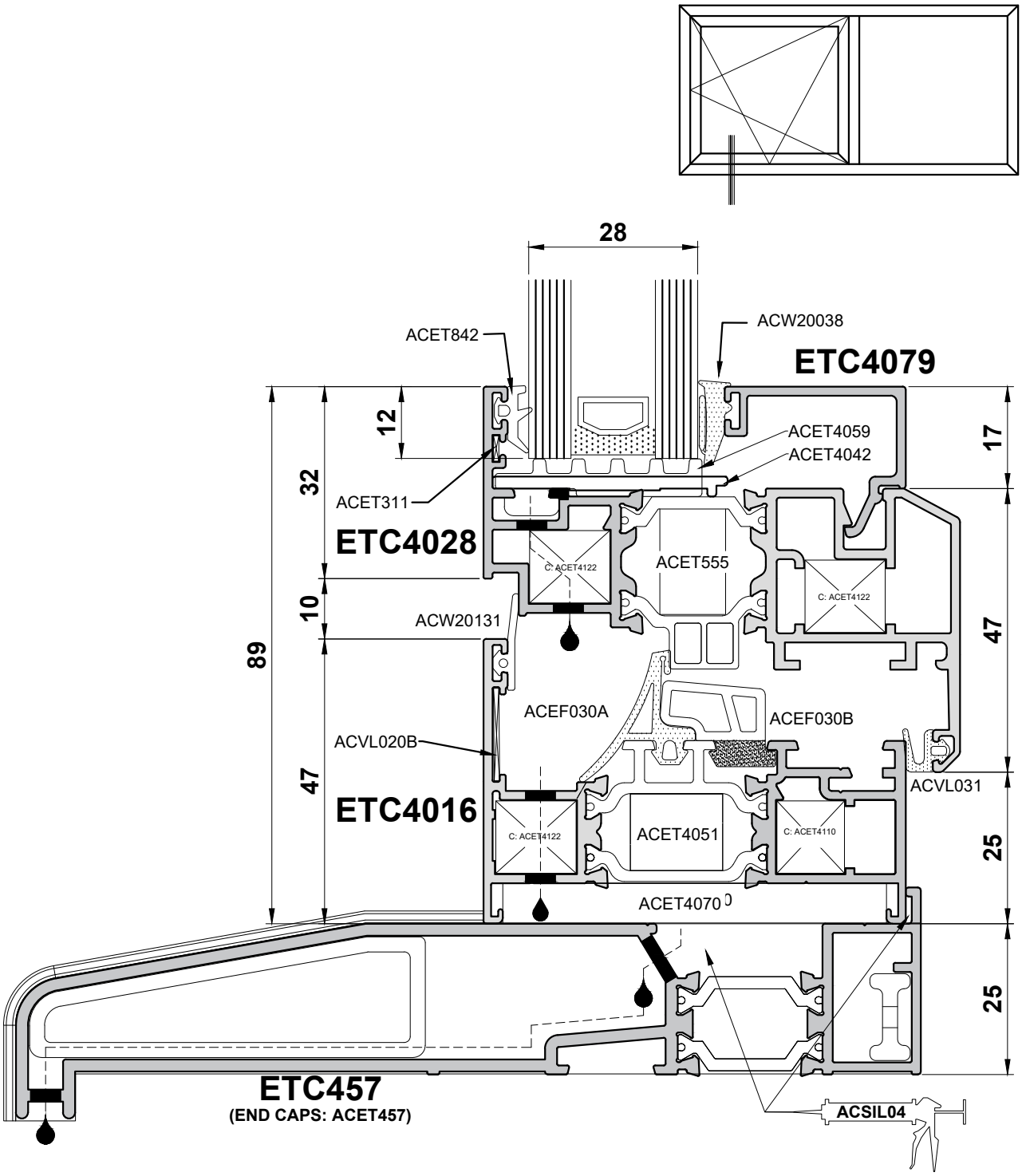

Do Not Scale From This Drawing

Detail 6A

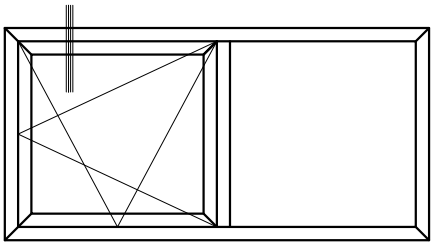

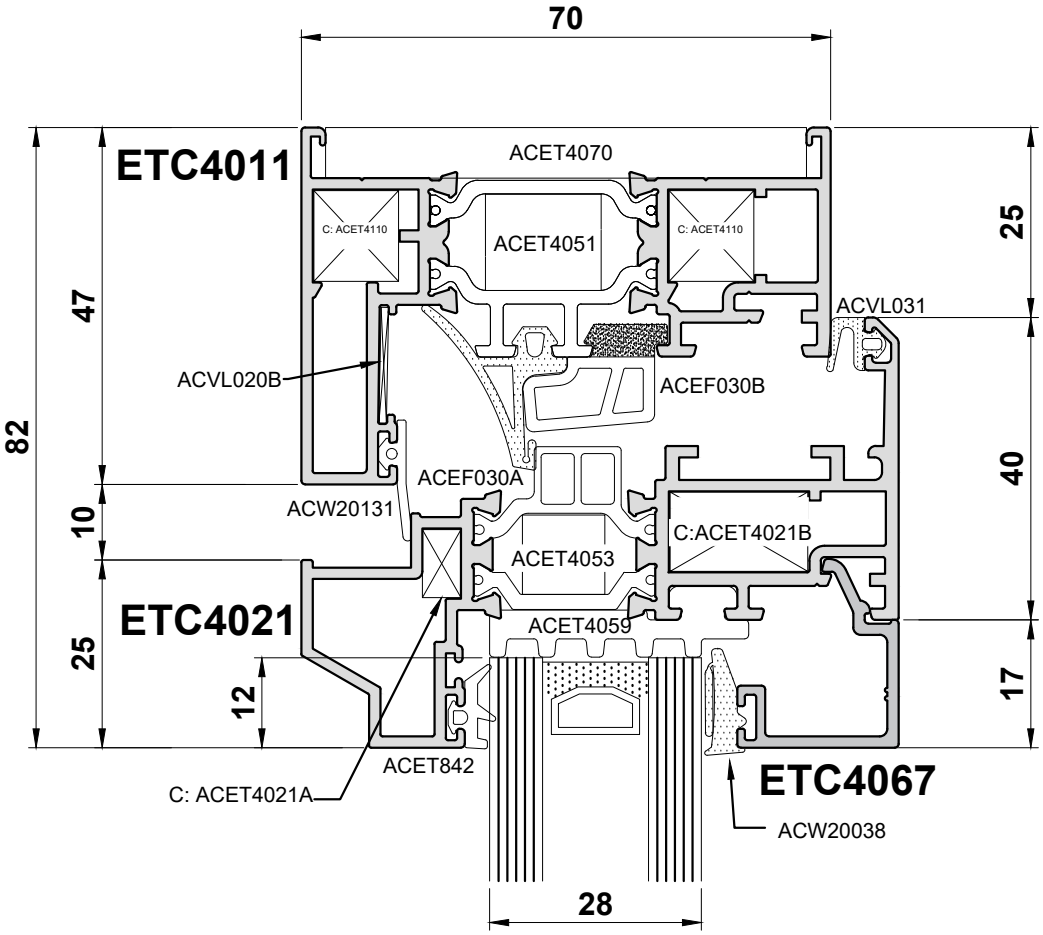

Do Not Scale From This Drawing

ISSUED : June 2025

Alitherm 400 Tilt & Turn

Detail 6B

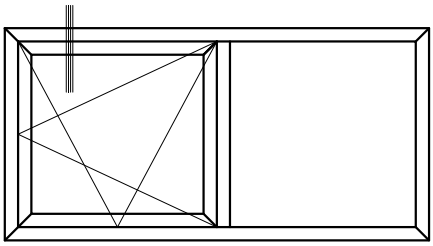

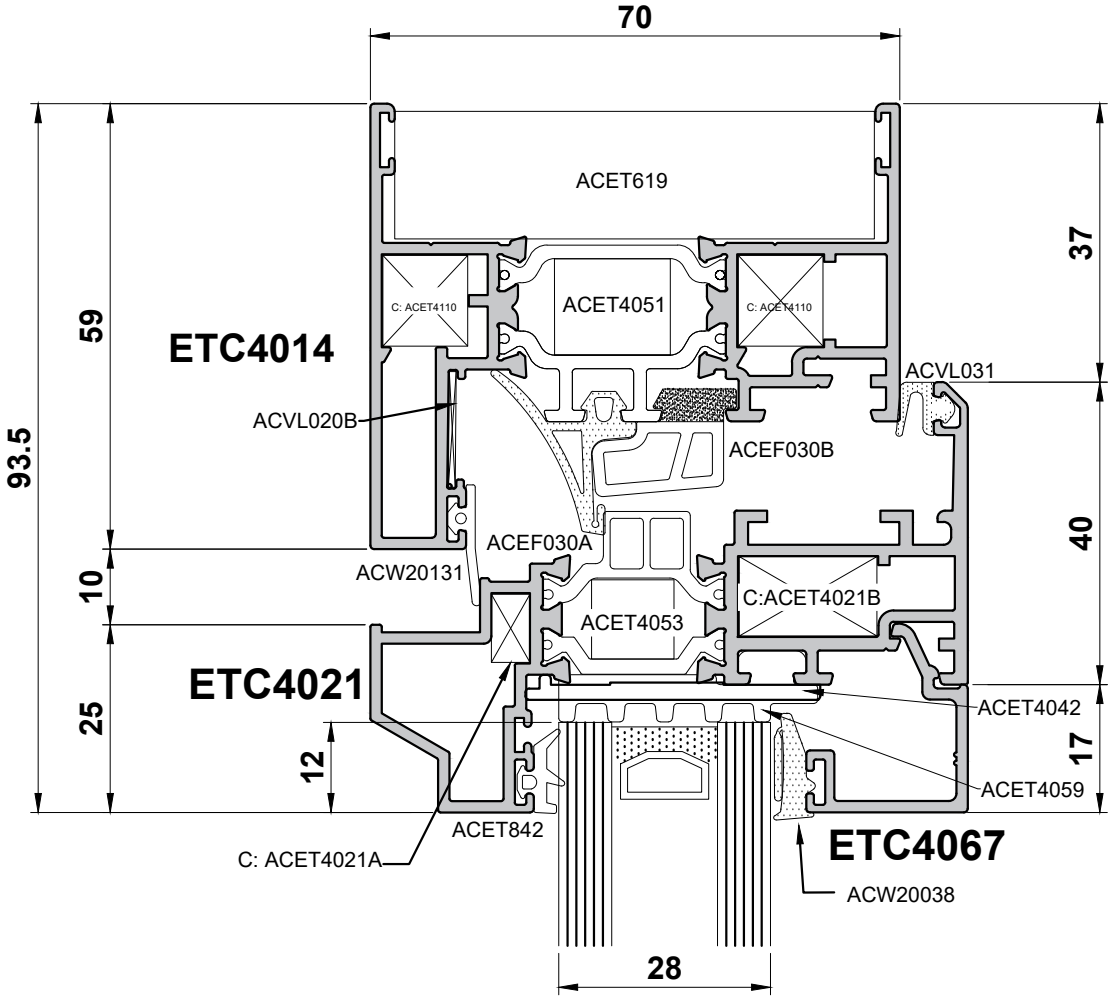

Do Not Scale From This Drawing

Detail 6C

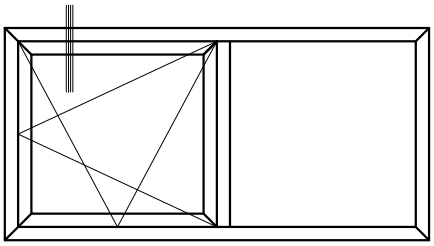

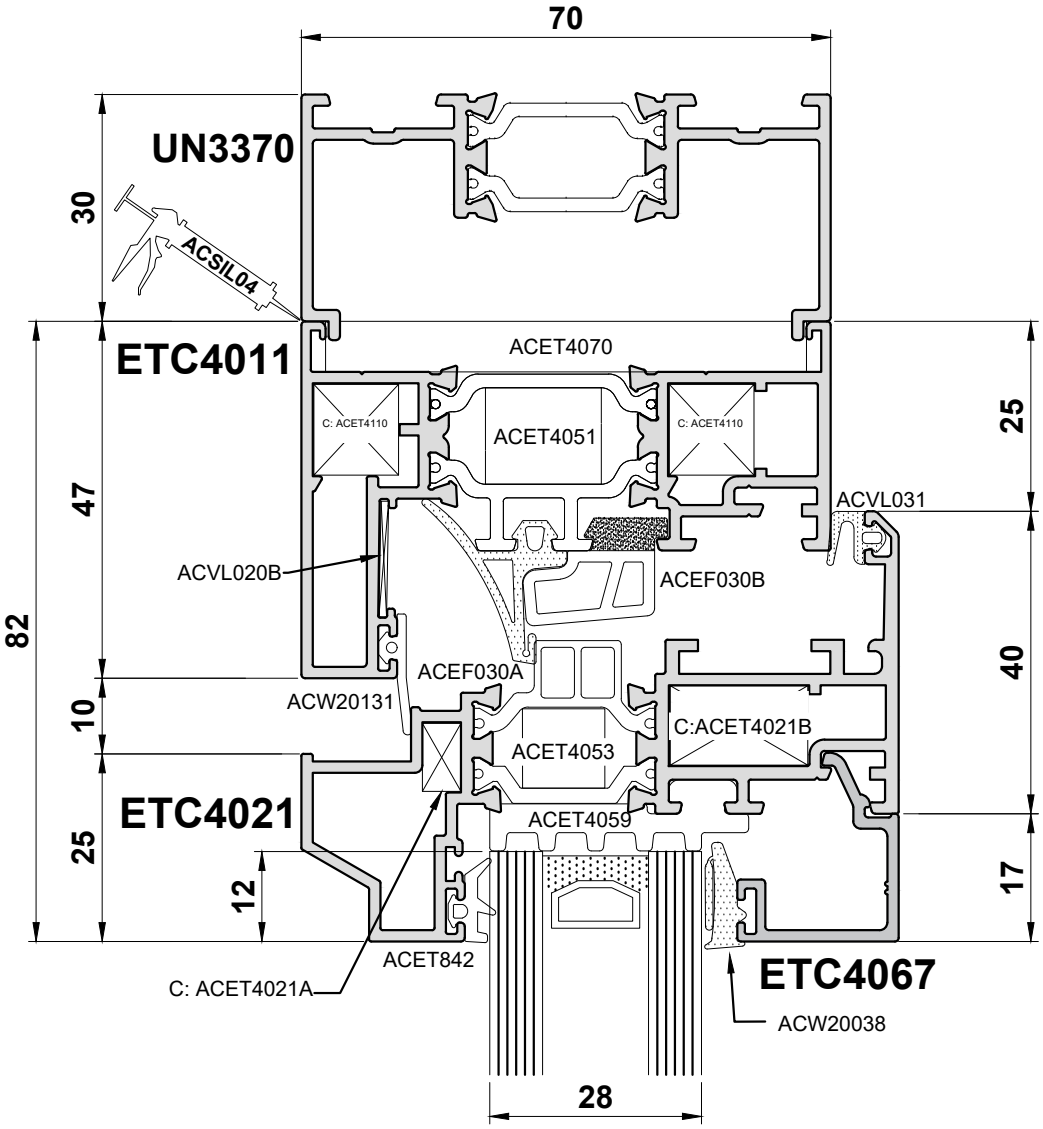

Do Not Scale From This Drawing

Detail 6D

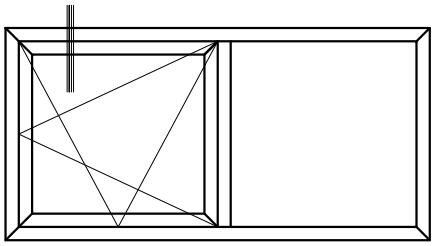

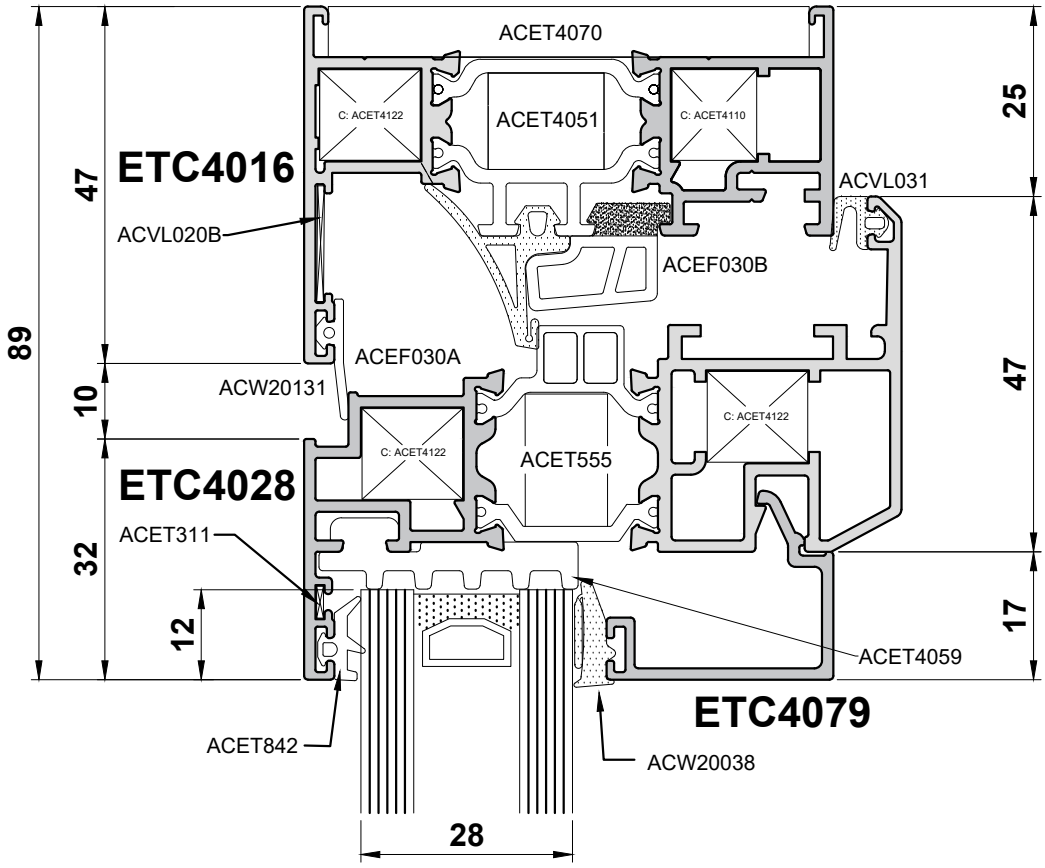

Do Not Scale From This Drawing

Detail 6E

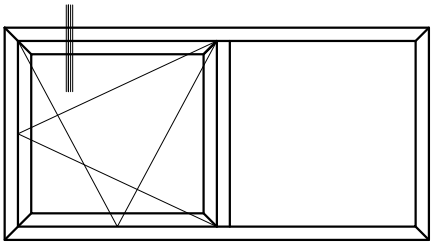

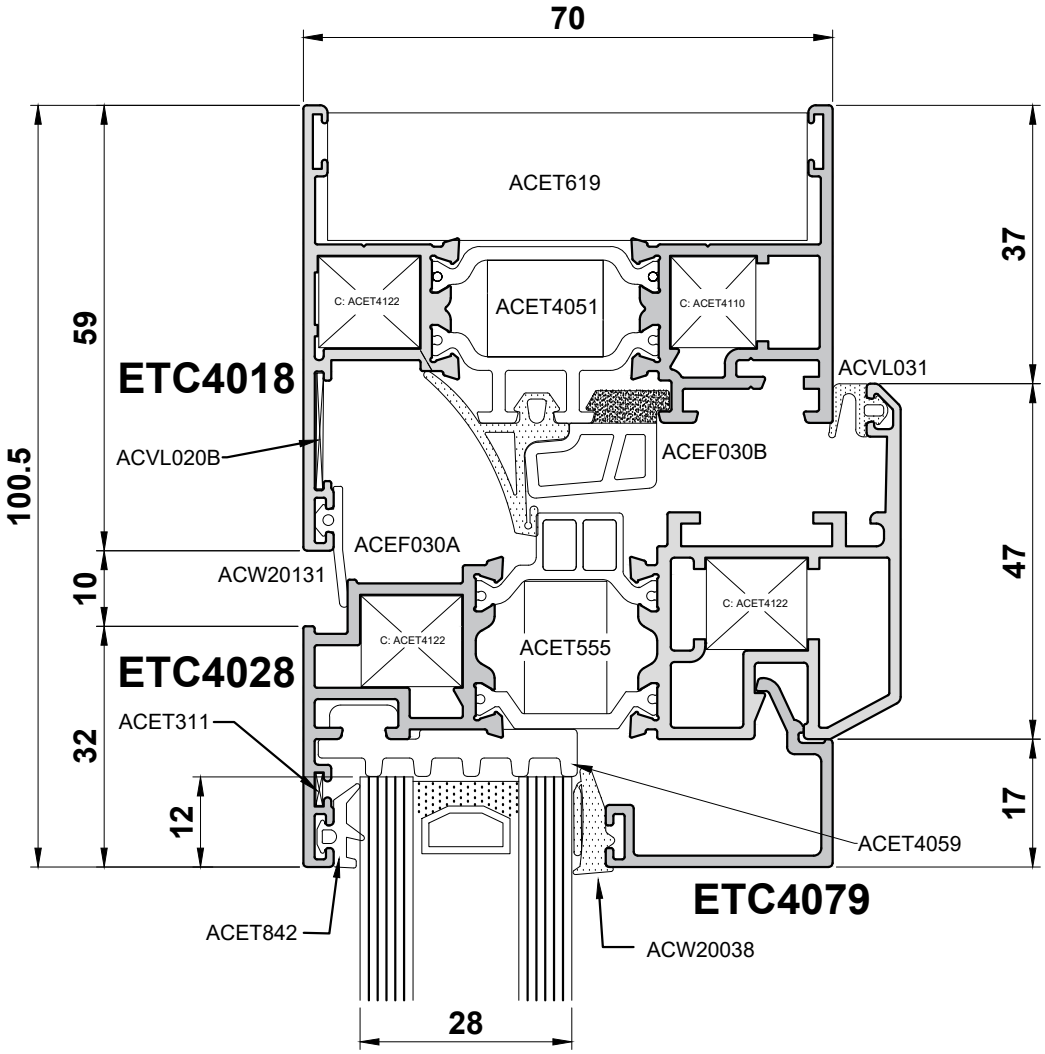

Do Not Scale From This Drawing

ISSUED : June 2025

Detail 6F

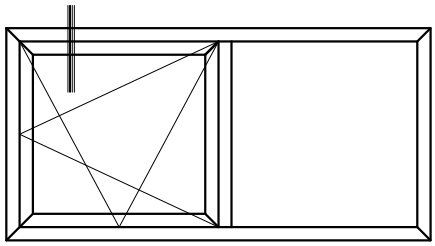

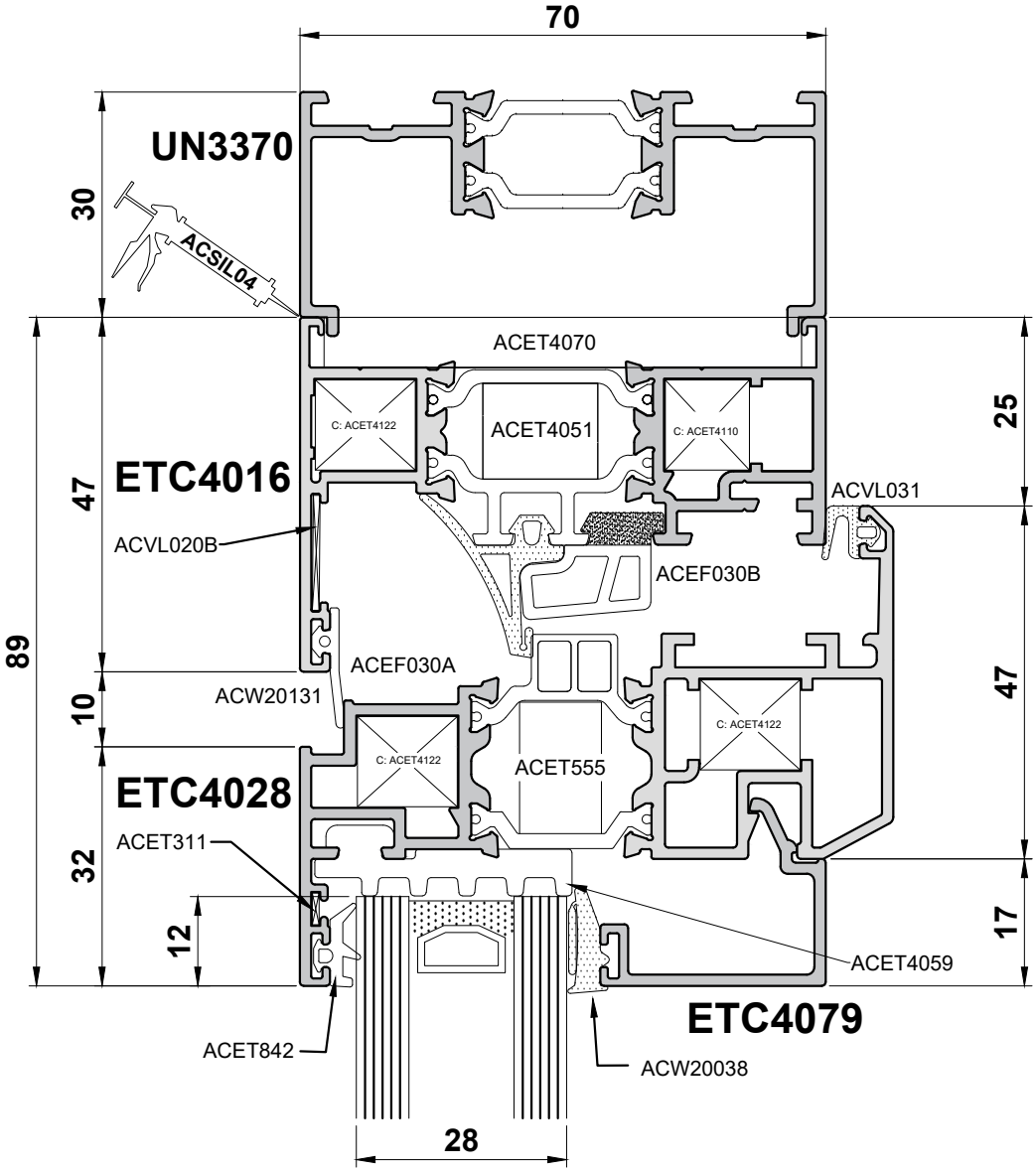

Do Not Scale From This Drawing

Detail 7A

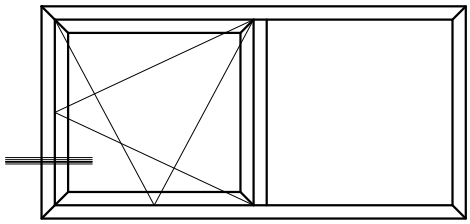

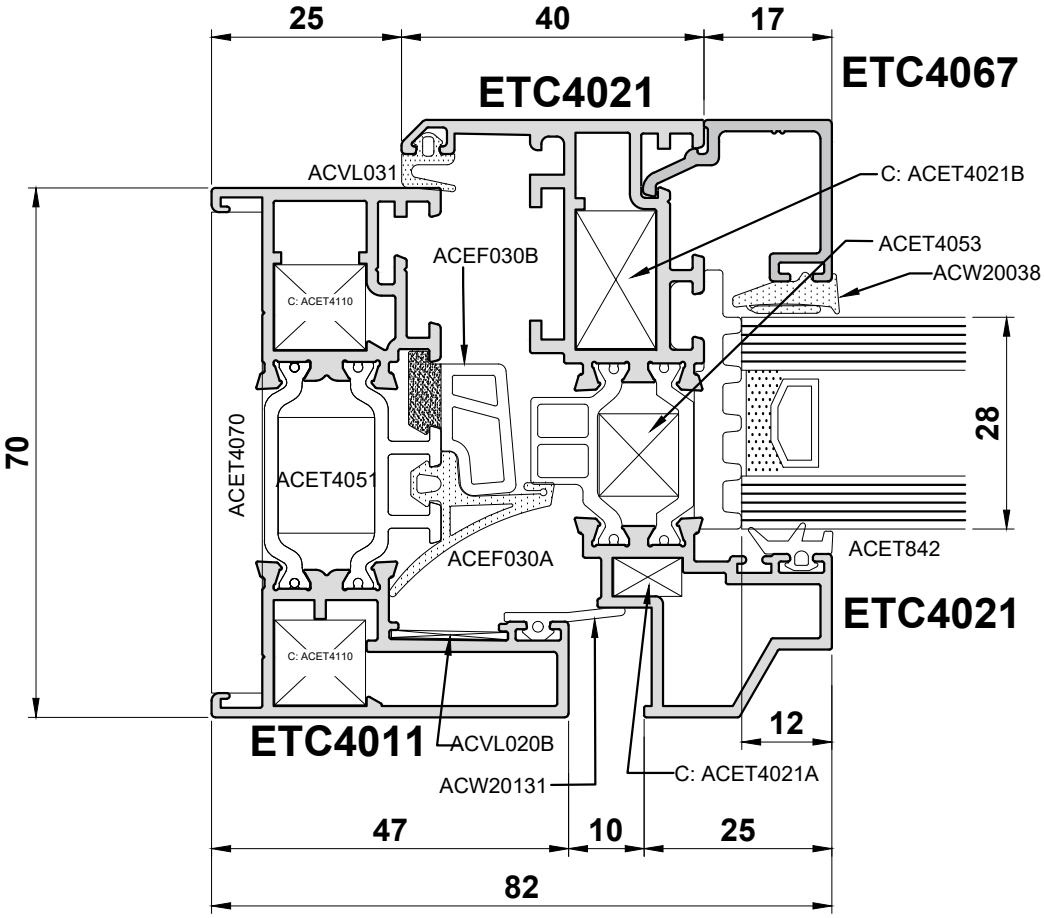

Do Not Scale From This Drawing

Detail 7B

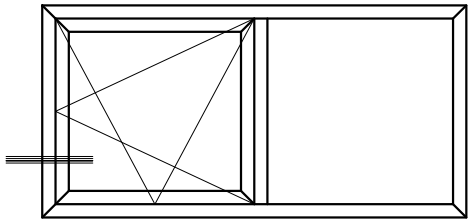

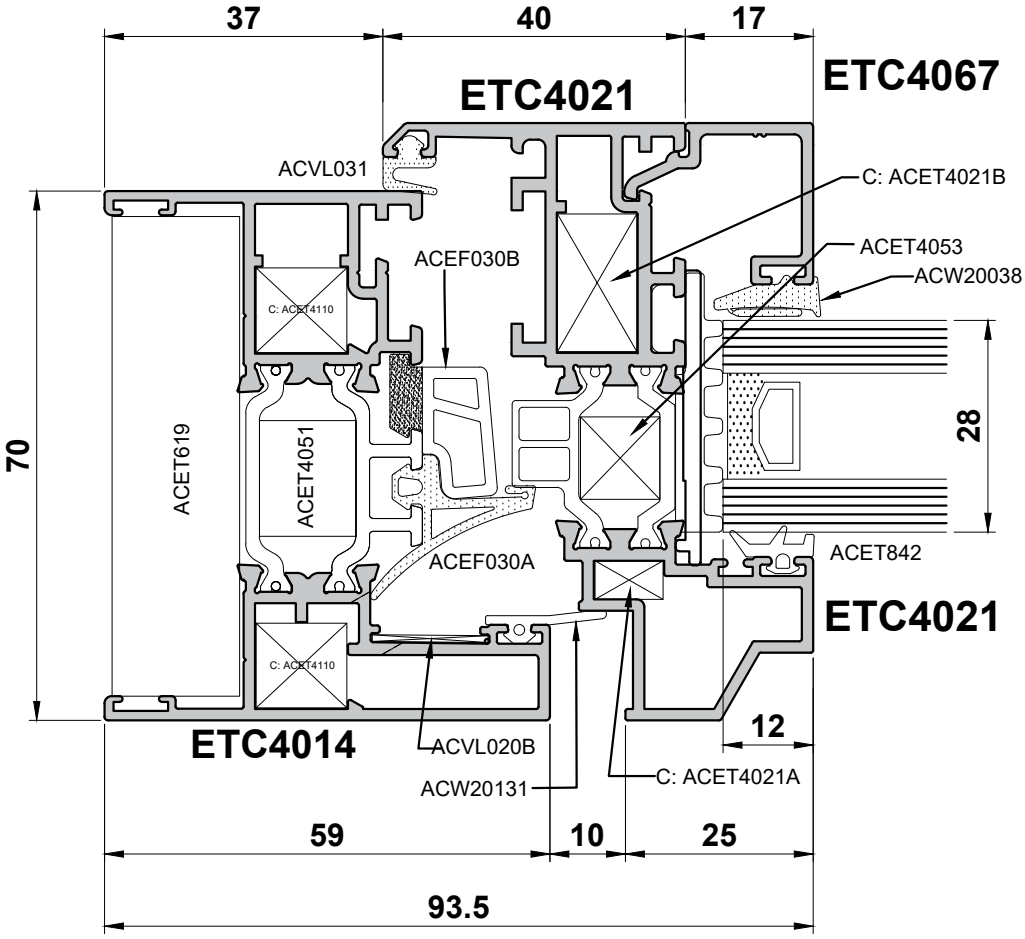

Do Not Scale From This Drawing

Detail 7C

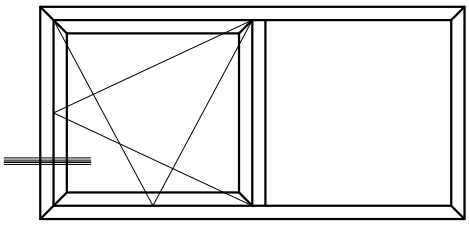

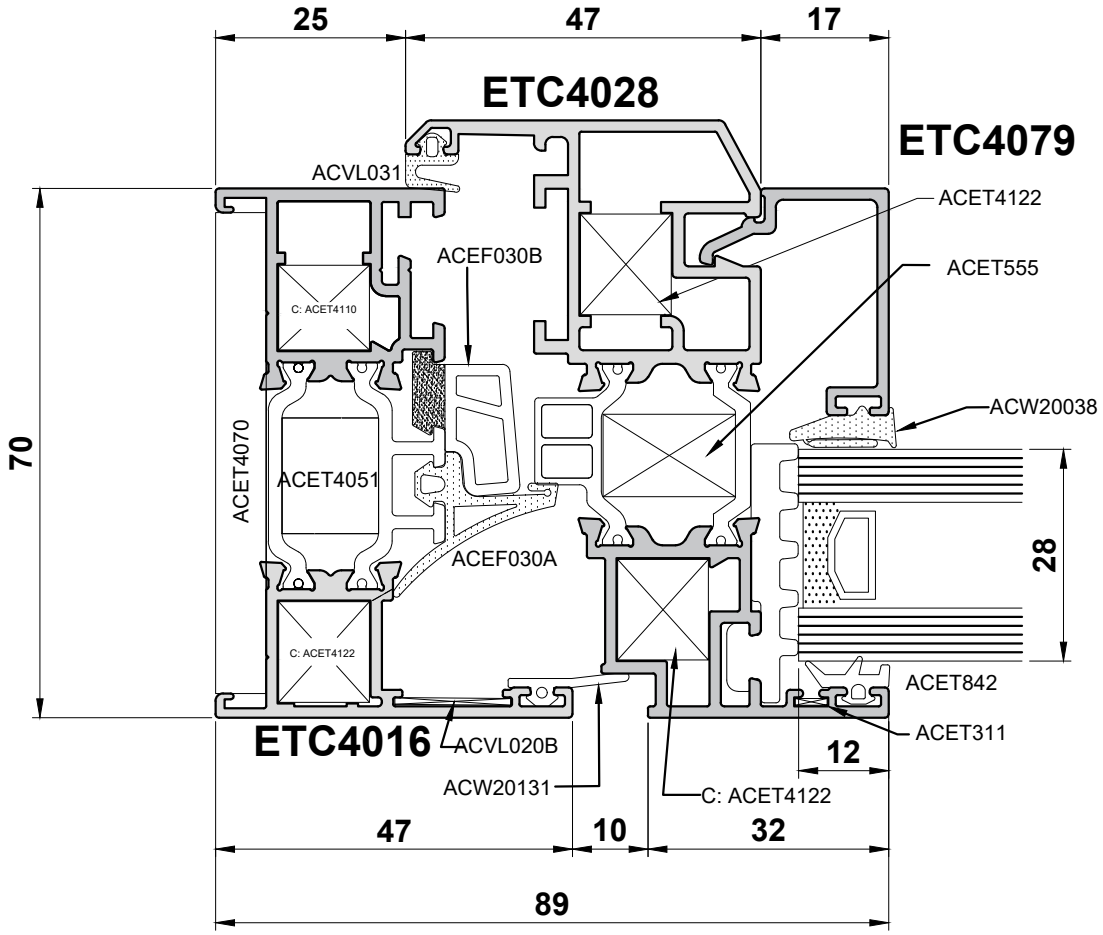

Do Not Scale From This Drawing

ISSUED : June 2025

Alitherm 400 Tilt & Turn

Detail 7D

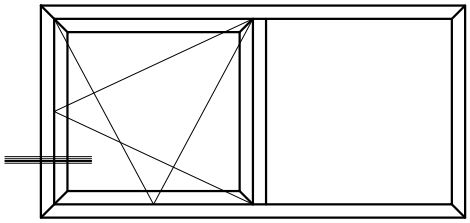

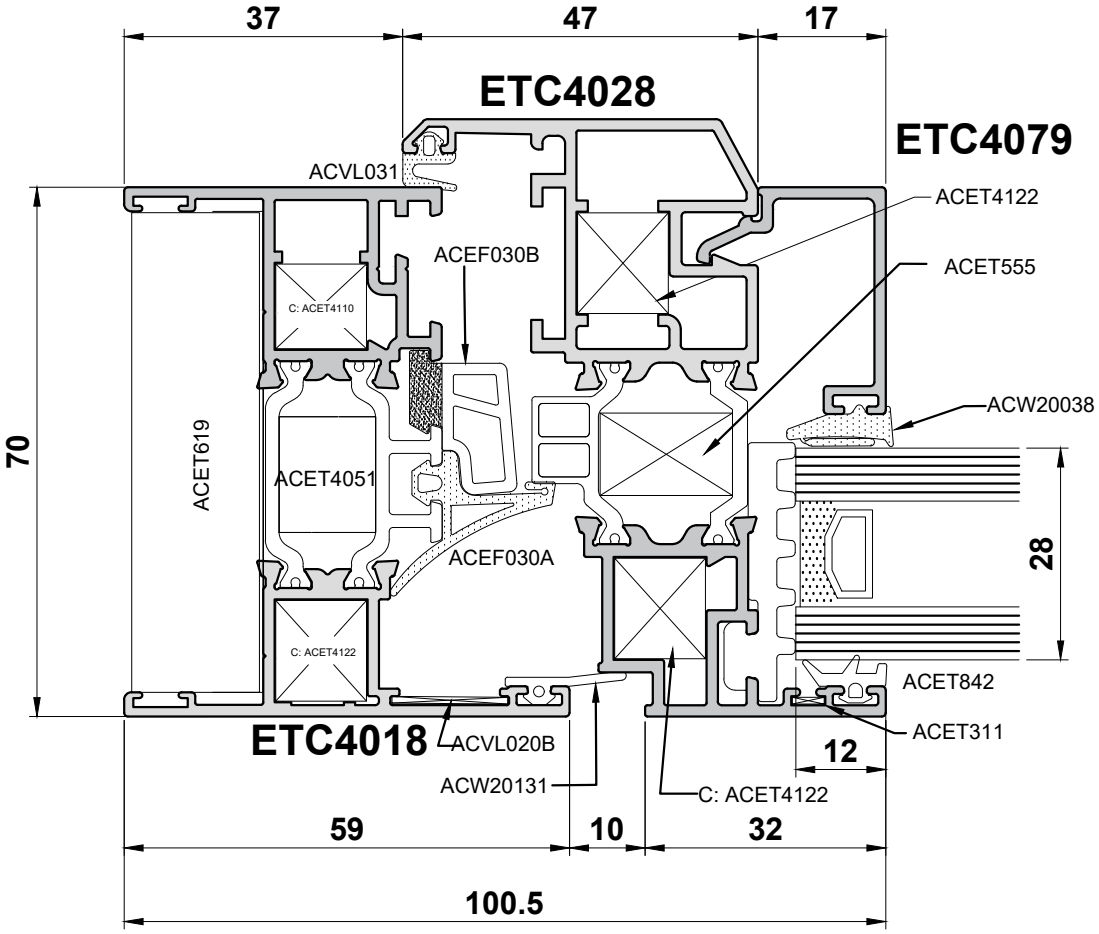

Do Not Scale From This Drawing

Detail 8A

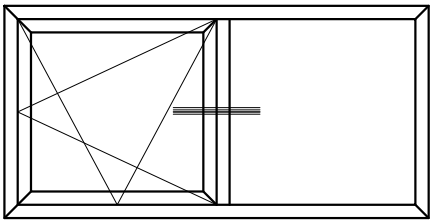

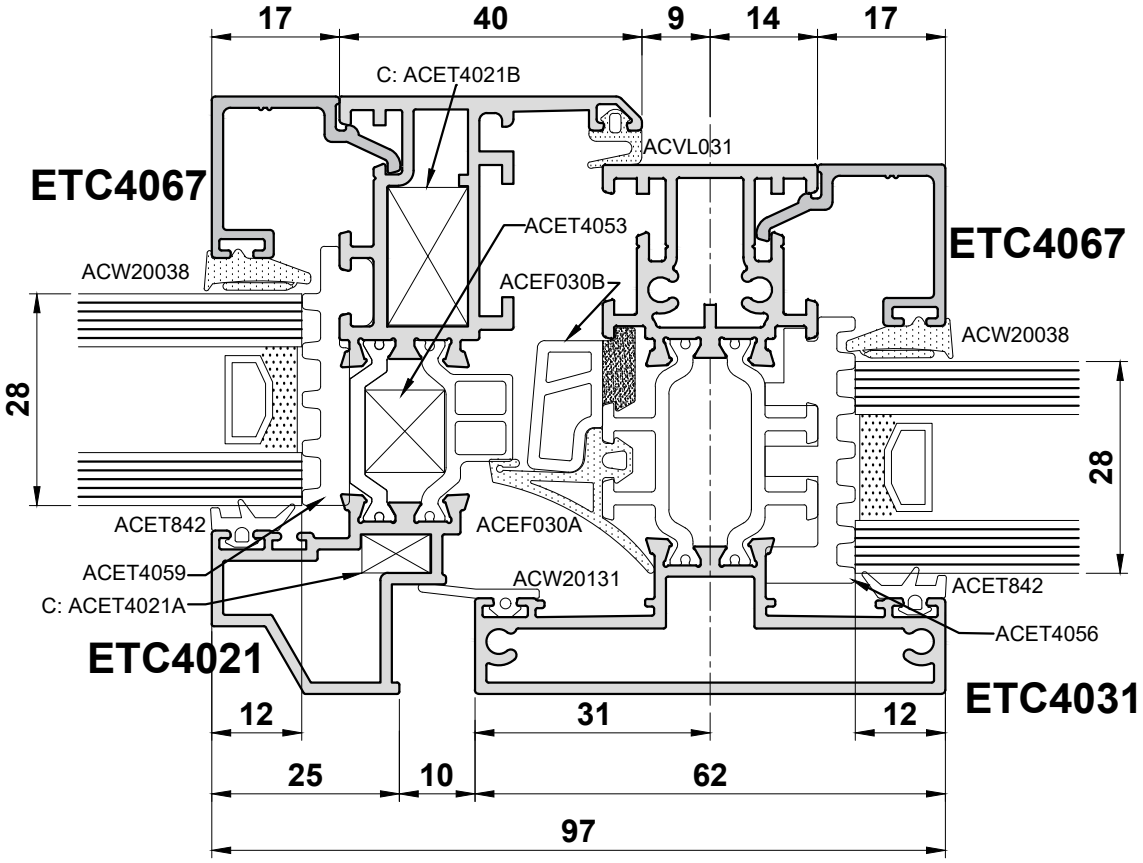

Do Not Scale From This Drawing

ISSUED : June 2025

Alitherm 400 Tilt & Turn

Detail 8B

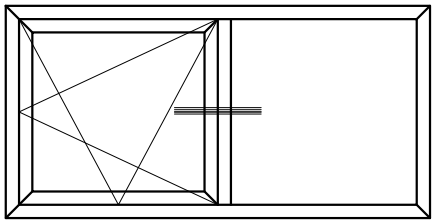

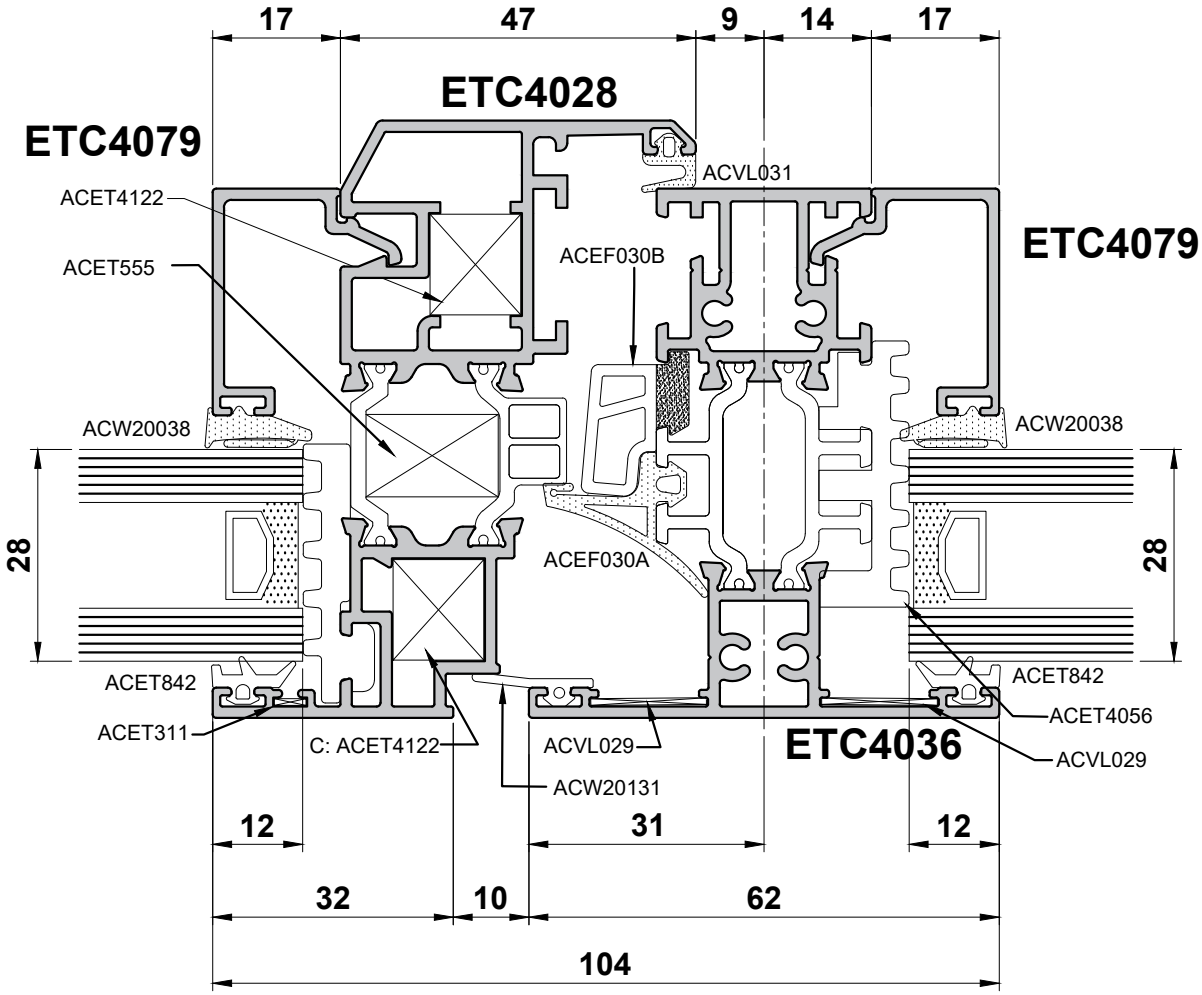

Do Not Scale From This Drawing

Alitherm 400 Tilt & Turn

Detail 9A

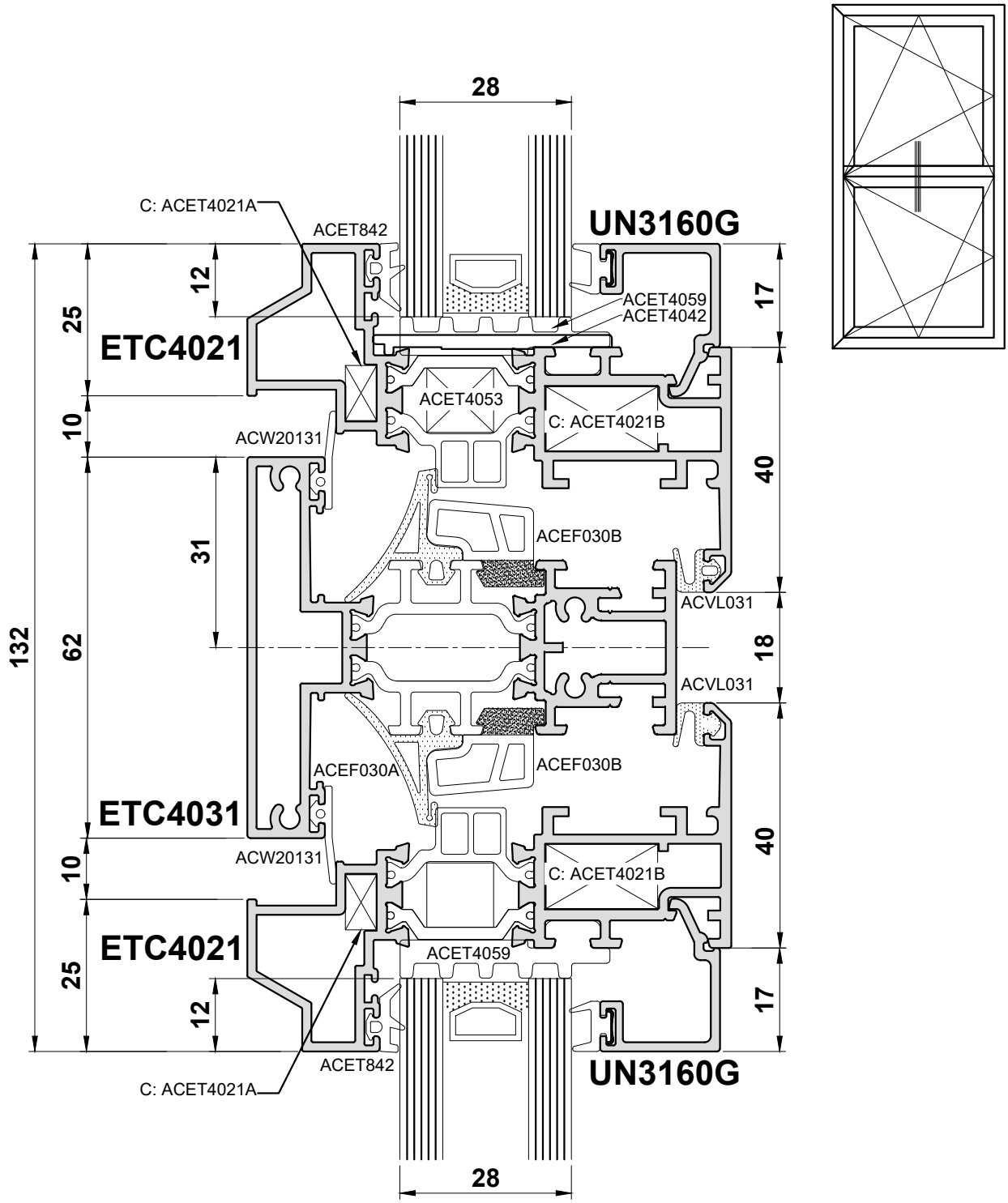

Do Not Scale From This Drawing

ISSUED : June 2025

Detail 9B

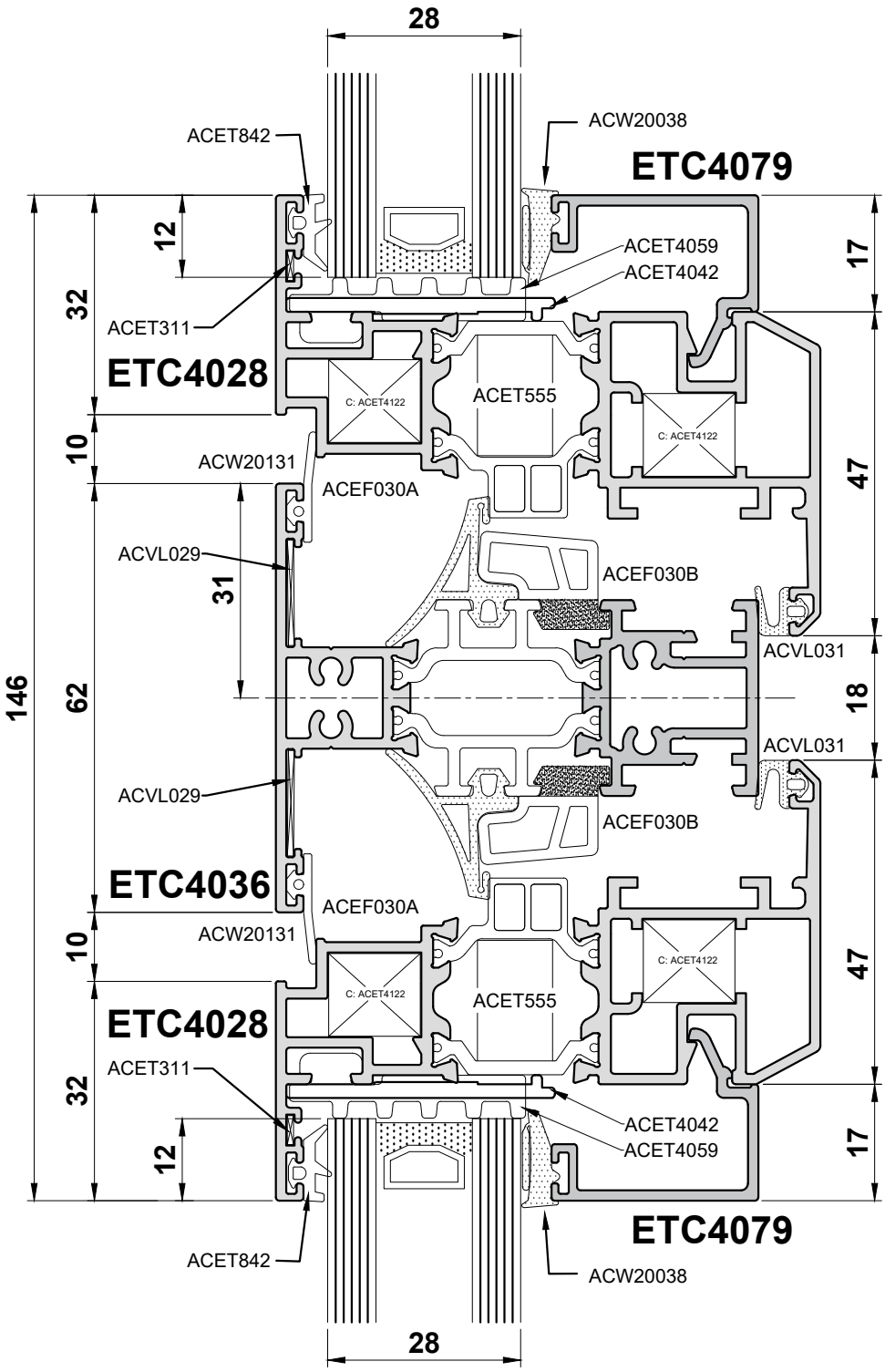

Do Not Scale From This Drawing

Detail 10

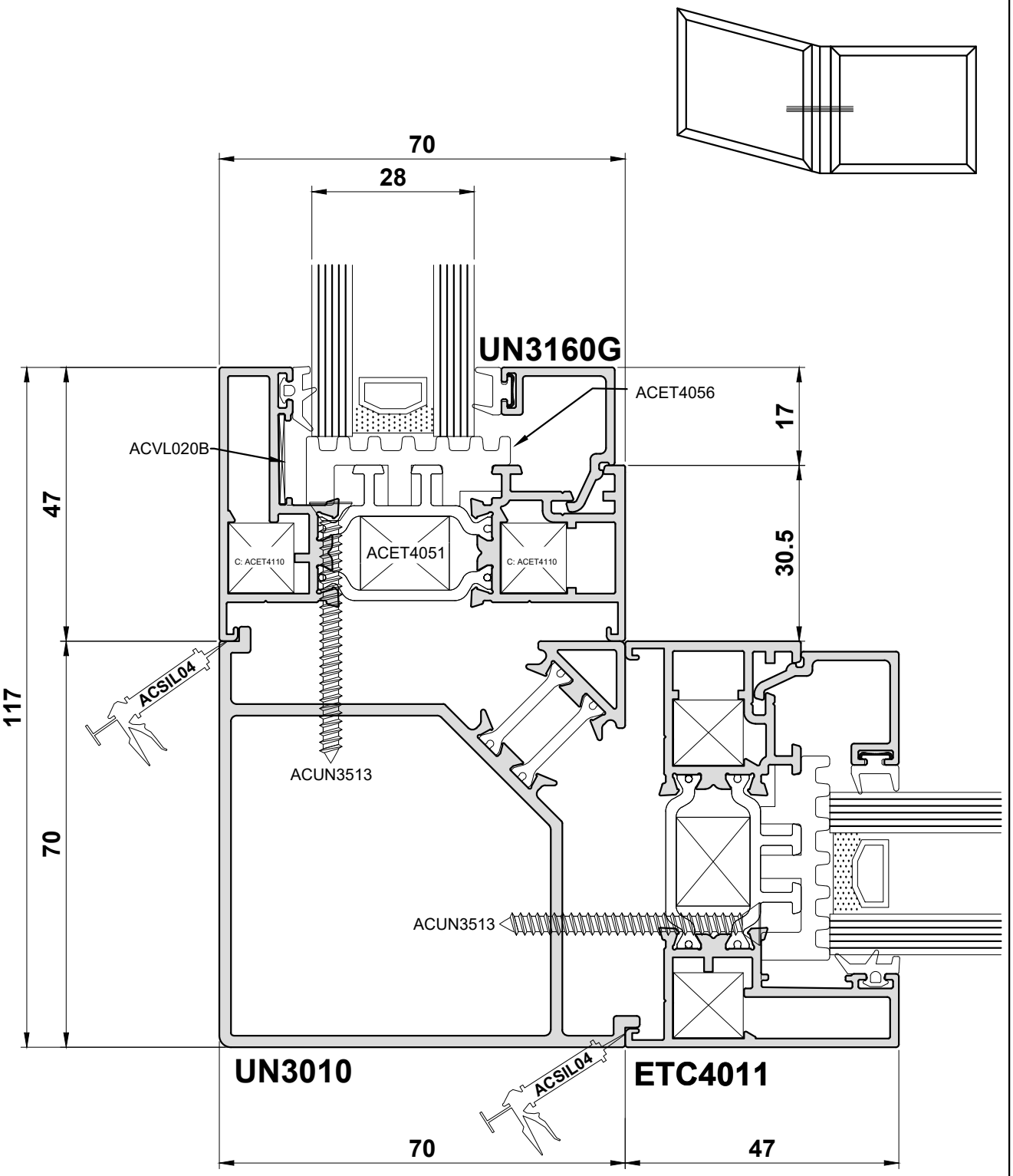

Do Not Scale From This Drawing

ISSUED : June 2025

Section D

Statics

For Wind Loading Limitations, Please Contact
The Technical Department - T: 01934 833100

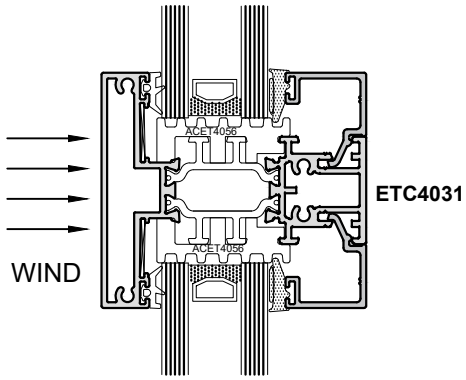

The position of the axes is an indication for the use and application of the moments of inertia (Ix and Iy) and the section modulus (Wx and Wy). We always choose the values of the axis perpendicular to the load to resist it.

- **To resist the wind loads we use the values Ix and Wx.**

EXAMPLE

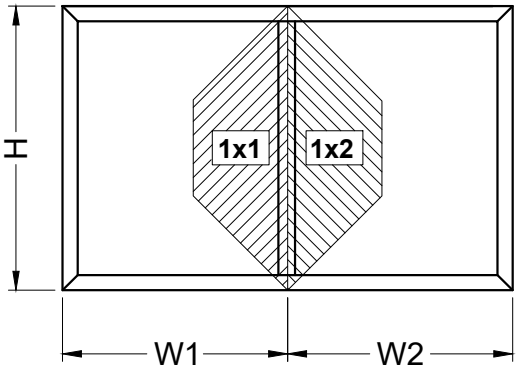

H = 175cm

W1 = 120cm

W2 = 100cm

P = 1250 Pa (wind pressure)

1) Determine Ixx value for the stiles (if required) using the Specification Wizard

Ixx = 21.0 cm4

2) Determine suitability

Number	Picture	Ix(cm4) wx(cm3)	Iy(cm4) wy(cm3)
ETC4031	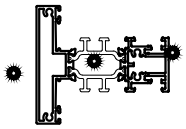	**34.93** **---** **8.73**	**12.29** **---** **3.95**

OK

Section E

E ETC

Construction Drawings

Corner Joint Details

Notes

1. Degrease mitre sections
2. Cover mitred faces with ACSIL04
3. Apply ACSIL013 to cleat chamber
4. Apply ACSIL04 to any fractures formed by crimping to make watertight

Table 1

KL Colour	Sealant Part Number
Black	ACSIL04BL
White	ACSIL04WP
Clear	ACSIL04CL
KL001	ACSIL04KL001
KL002	ACSIL04KL002
KL003	ACSIL04KL003
KL004	ACSIL04KL004
KL005	ACSIL04KL005
KL006	ACSIL04KL006
KL007	ACSIL04KL007
KL010	ACSIL04KL010
KL011	ACSIL04KL011
KL012	ACSIL04KL012
KL013	ACSIL04KL013

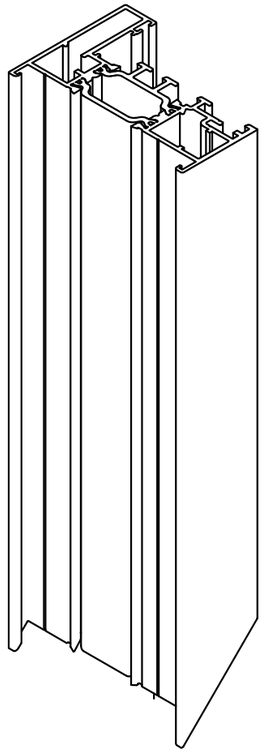

Corner Chevron

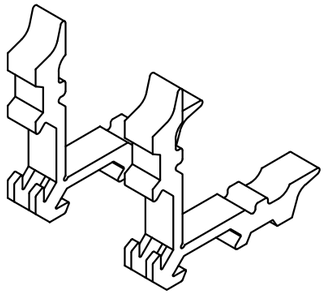

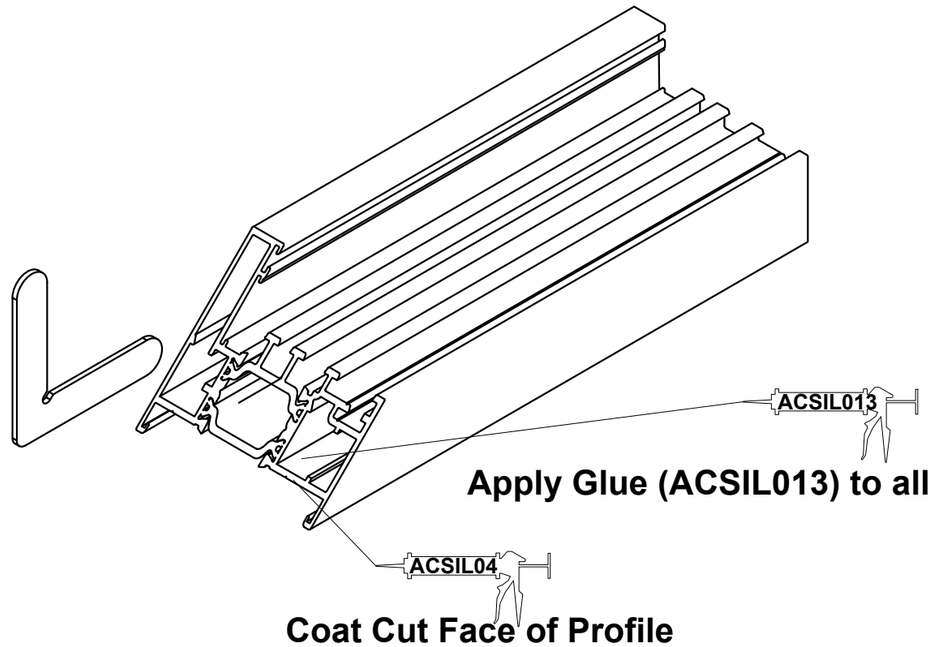

Apply Glue (ACSIL013) to all Cleat Apertures

Coat Cut Face of Profile with ACSIL04 Prior to Crimping (available in KL colours - see Table 1)

Do Not Scale From This Drawing

Pneumatic Corner Crimping

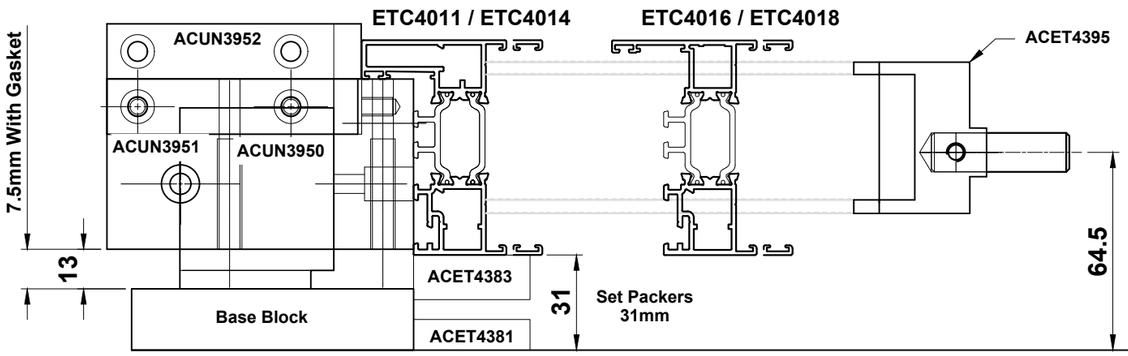

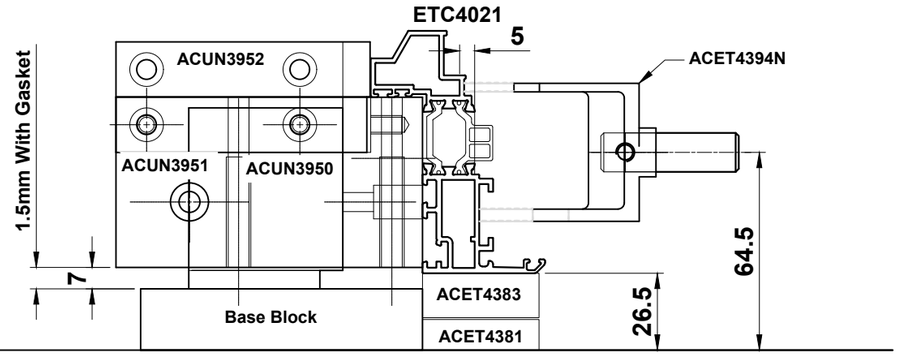

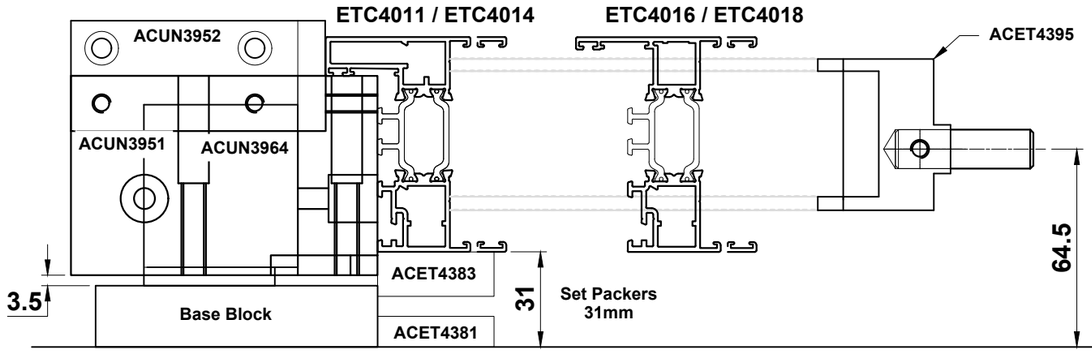

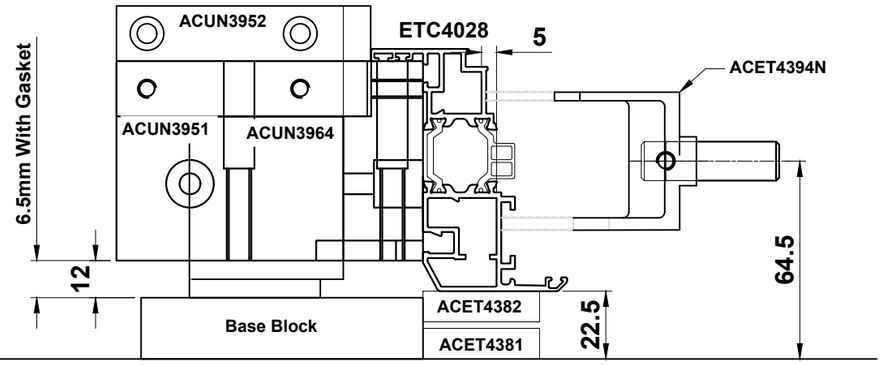

Please consult our Technical Department for support with alternative crimper models

Do Not Scale From This Drawing

Cill Drainage

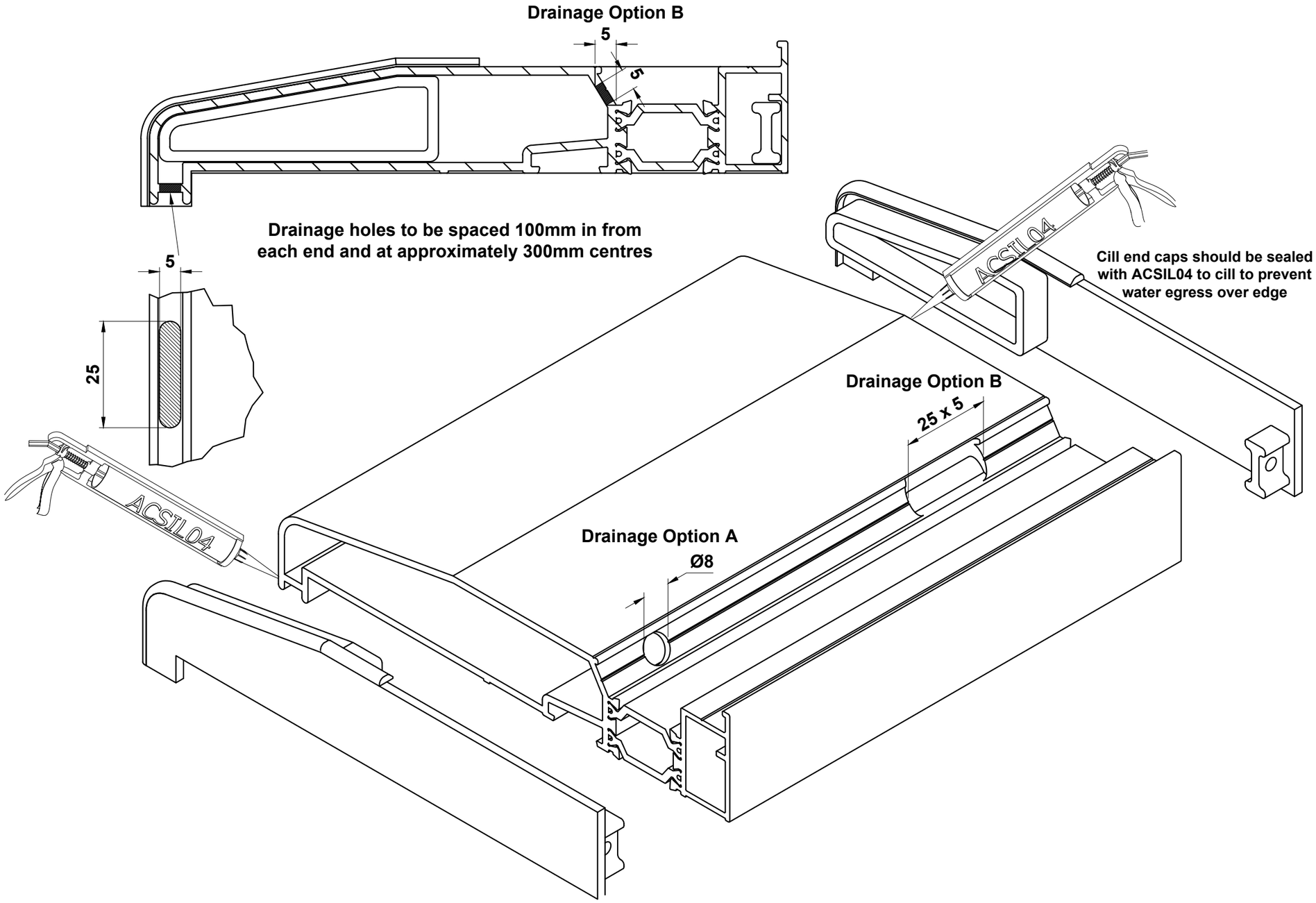

Do Not Scale From This Drawing

Angled Sub Cill

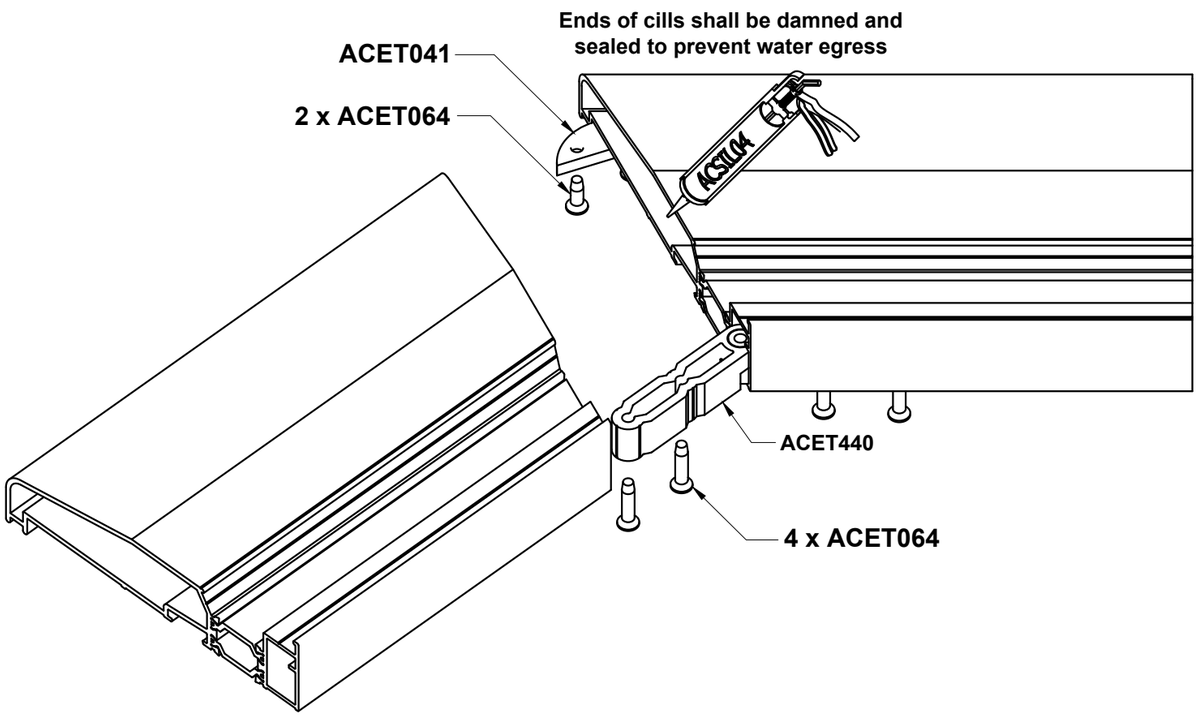

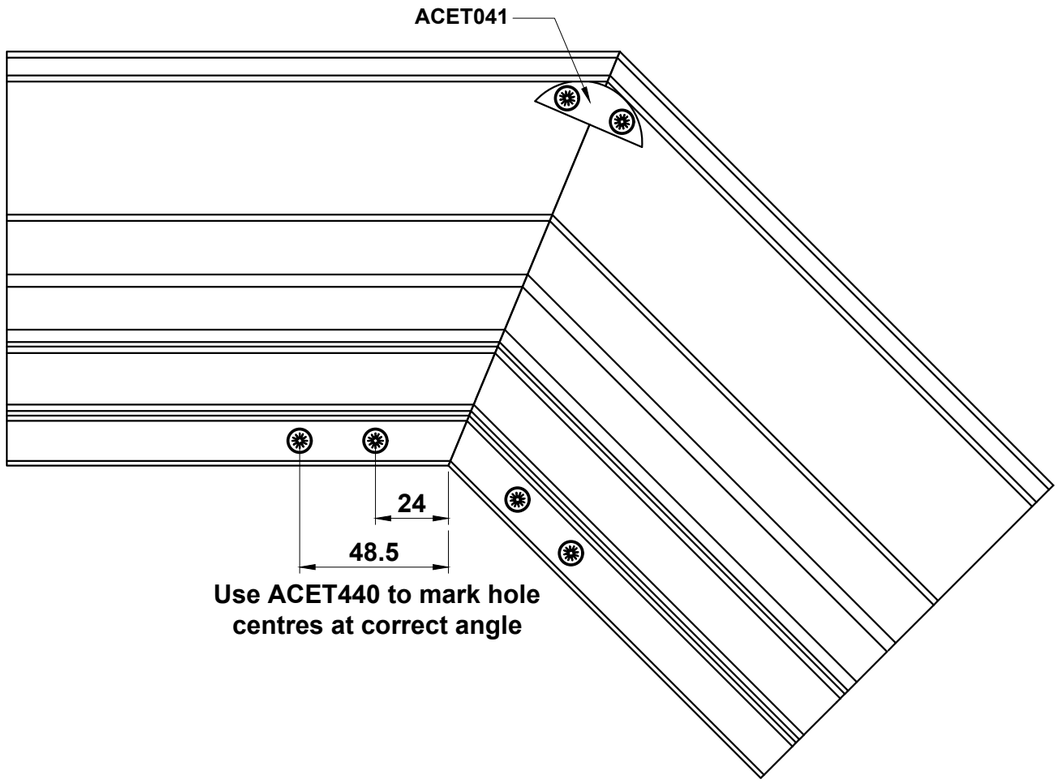

Do Not Scale From This Drawing

Tilt & Turn Outer Frame & Sash

Outer Frame Gasket

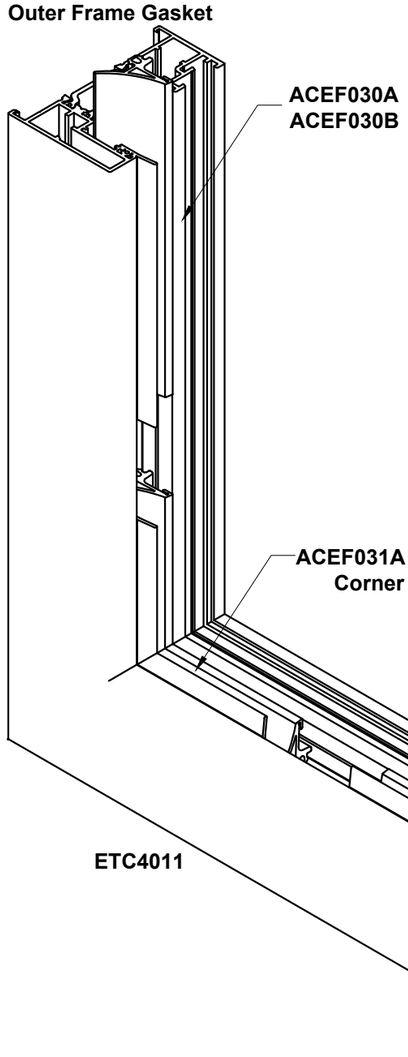

Sash Corner Preparation
(must be prepped prior to assembly)
ACET4905 Punch tool may be used

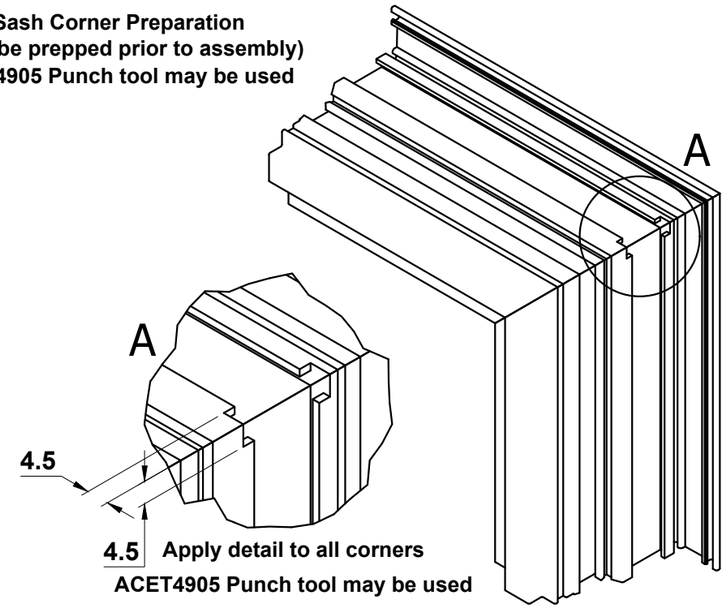

Important Note:
For PAS24 use
Sobinco Safe Invision

Handle Preparation
(must be prepped prior to assembly)
ACET4905 Punch tool may be used

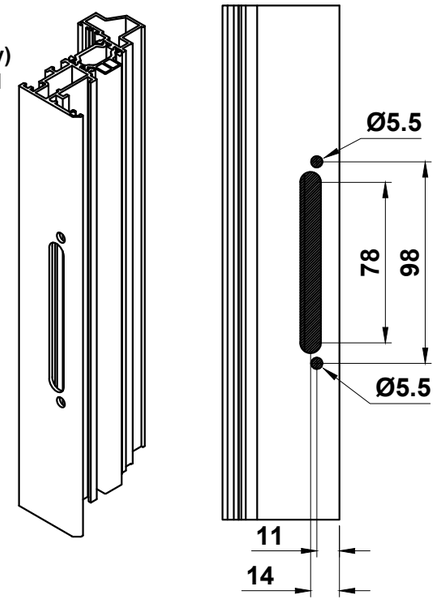

Preperation for ACET463 & ACET464 handles
Requires adaptors:
Fapim: ACFA212
SB Chrono: ACSZ905

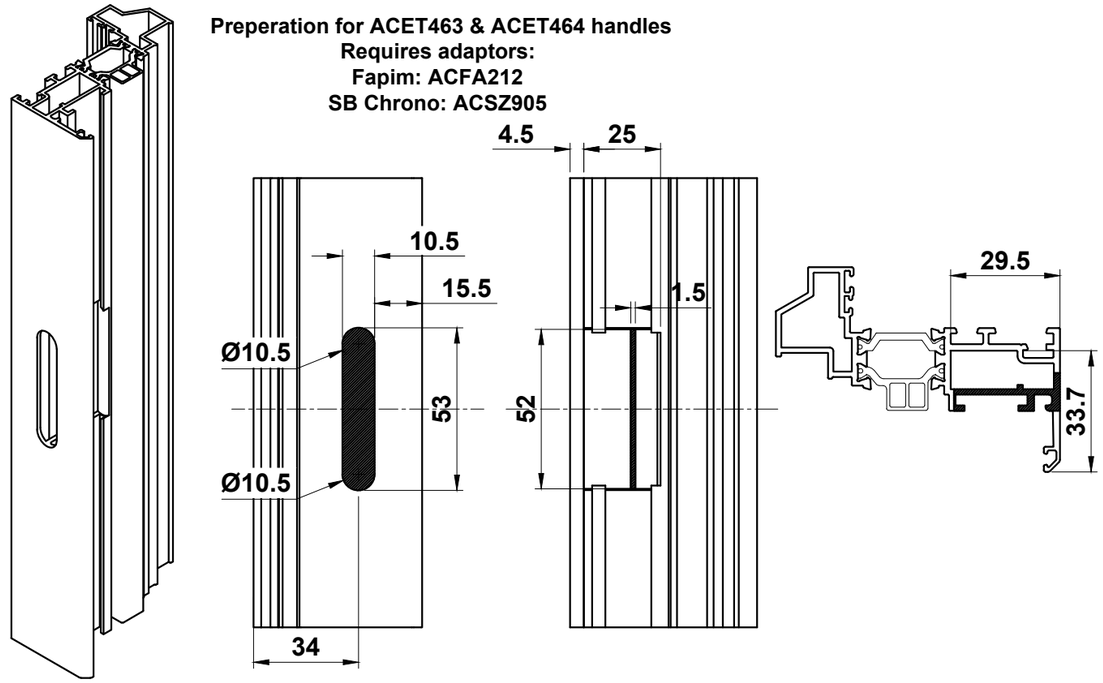

Do Not Scale From This Drawing

Tilt & Turn Overview

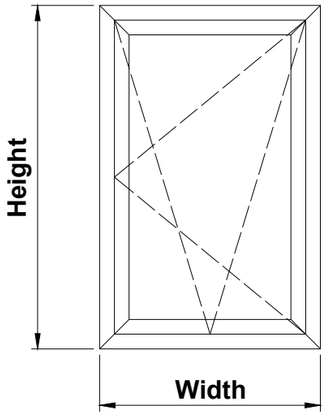

Important Notes:

1. **The size limitations of the chosen tilt & turn hardware must be adhered to**
2. **The width of the sash cannot be more than 1.5 times the height**
3. **Maximum sash weight = 90kg**
4. **Please refer to the tilt & turn hardware manuals for the latest information.**

***Due to the narrow outer frame, we recommend using the Chrono Invision tilt & turn gear to avoid issue with the internal render. Alternatively, an extension section maybe used as shown.**
Please see the SB Chrono manual or the Fapim manual for full gearing details

Fapim Tilt & Turn Hardware

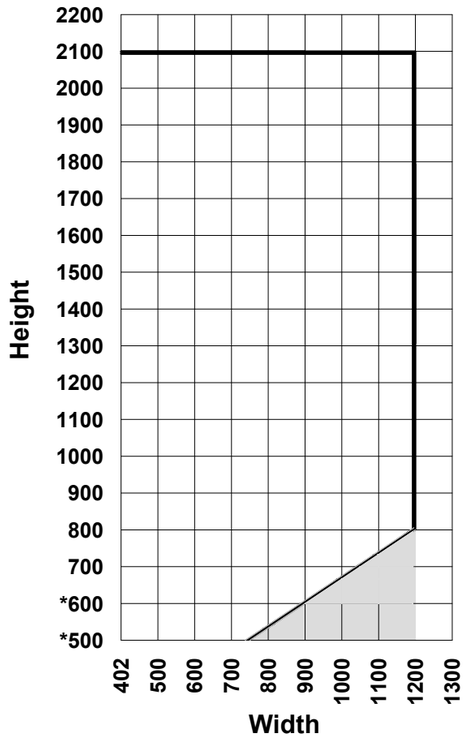

Sobinco Tilt & Turn Hardware

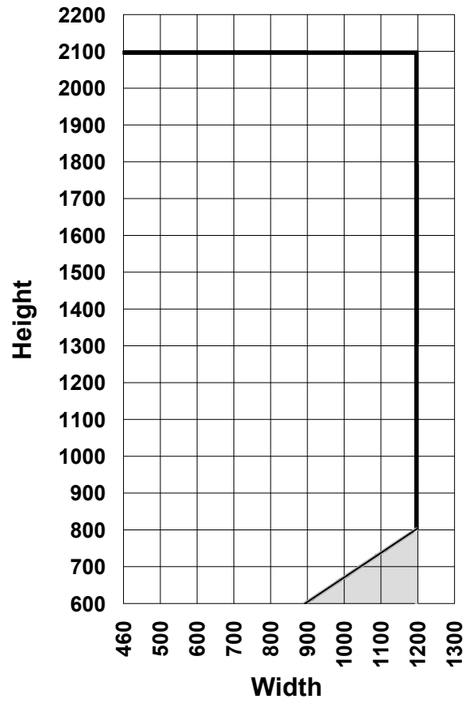

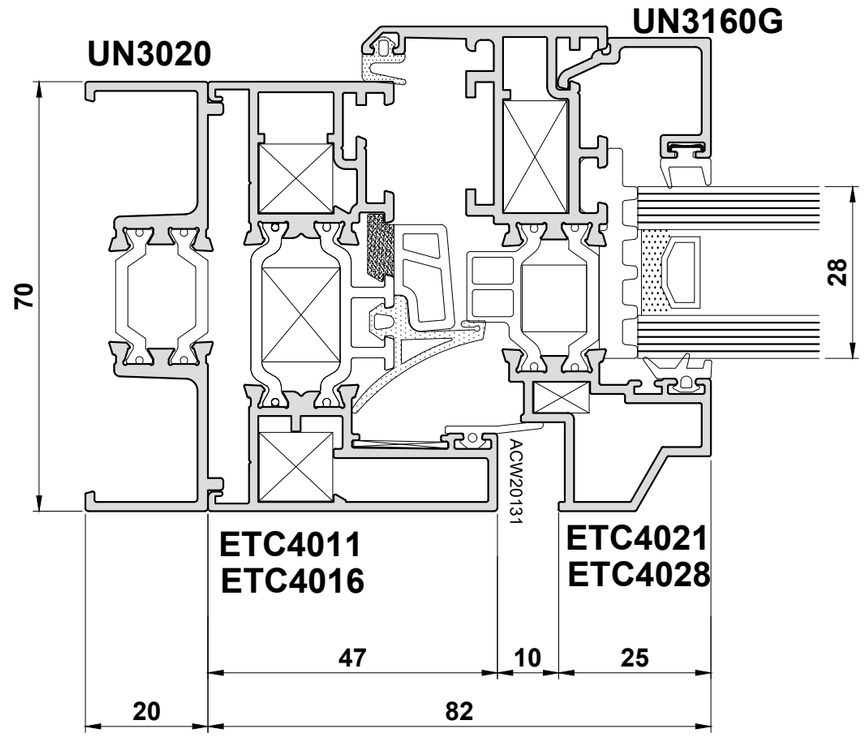

Important Note:
For PAS24 use Sobinco Safe Invision

Do Not Scale From This Drawing

ACUN3140 Hinge

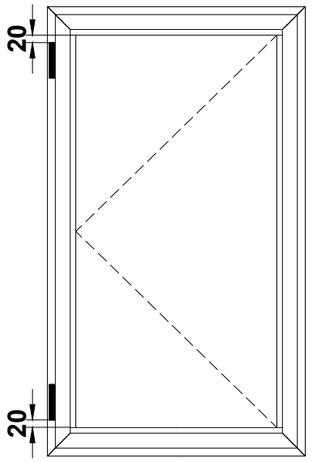

2 Hinge Locations

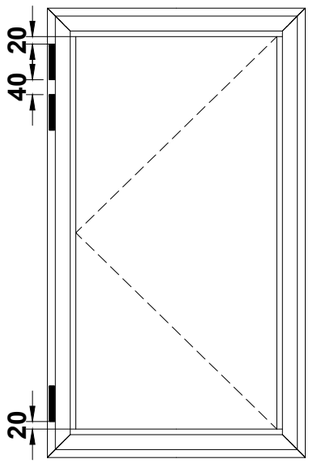

3 Hinge Locations

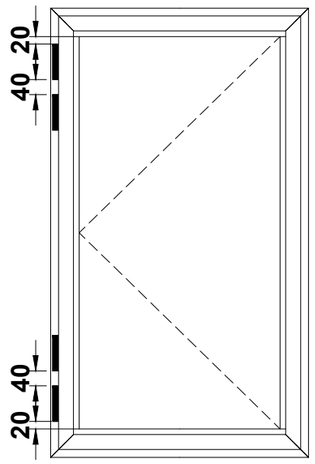

4 Hinge Locations

ACUN3140 - Hinge Limitations

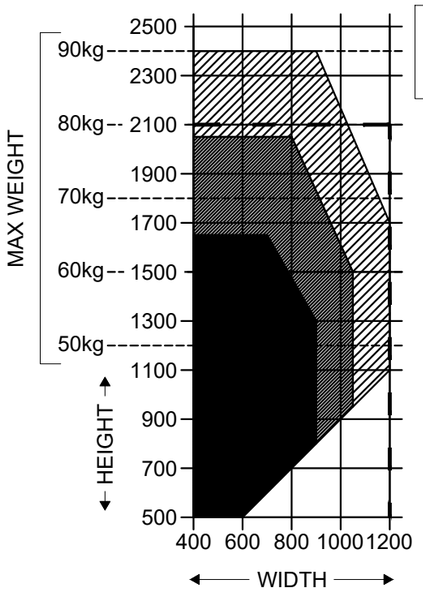

FOR BOTTOM OR SIDE HUNG OPEN IN WINDOWS. (hardware by others)

Please note:
Sash and Hinge Limitations are different.

Anything fabricated outside of Smart Systems Ltd. sash limitations will not be covered by Kitemark.

Smart Systems Ltd. sash size limitations

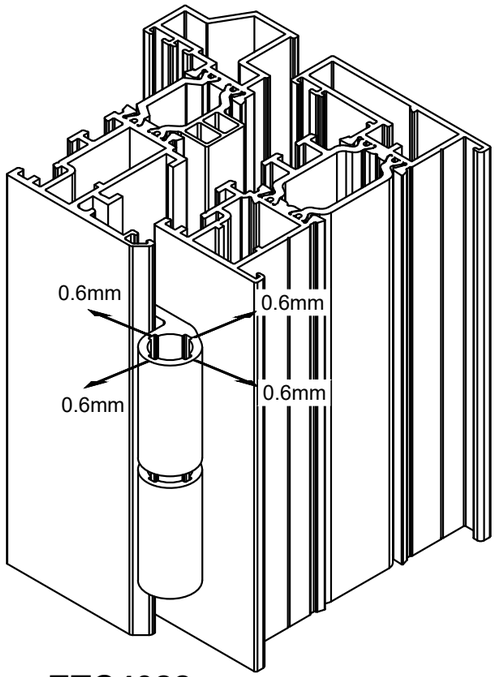

ETC4028
ETC4021

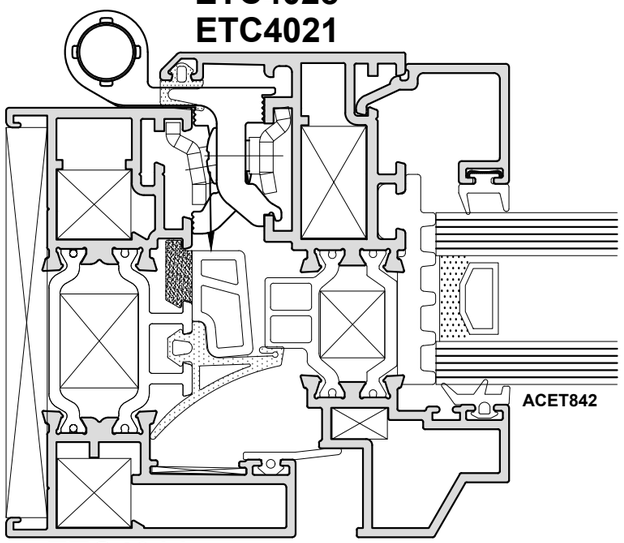

ETC4011
ETC4016

ACUN3140 - Hinge Assembly

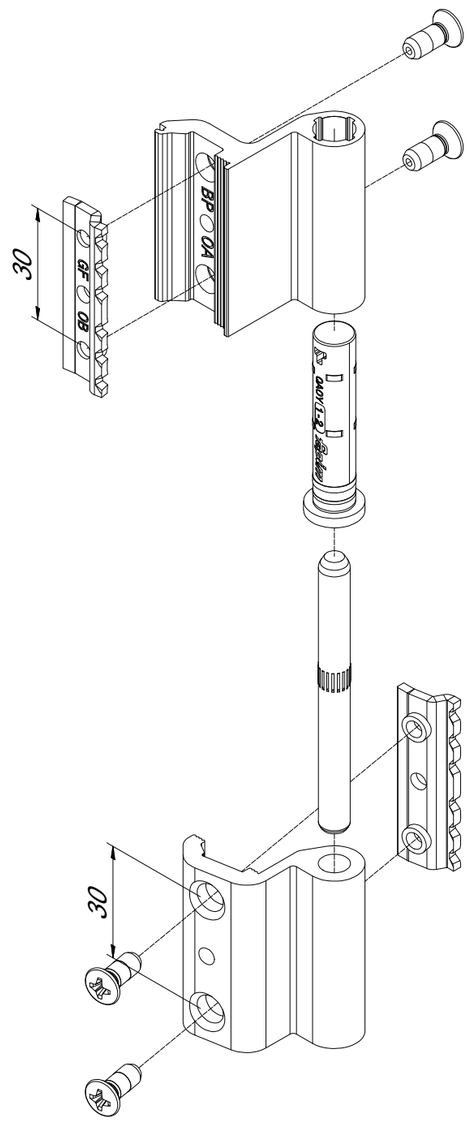

Window Drainage

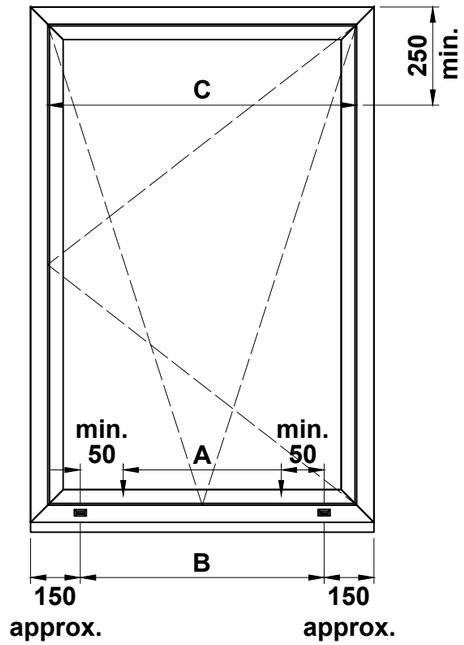

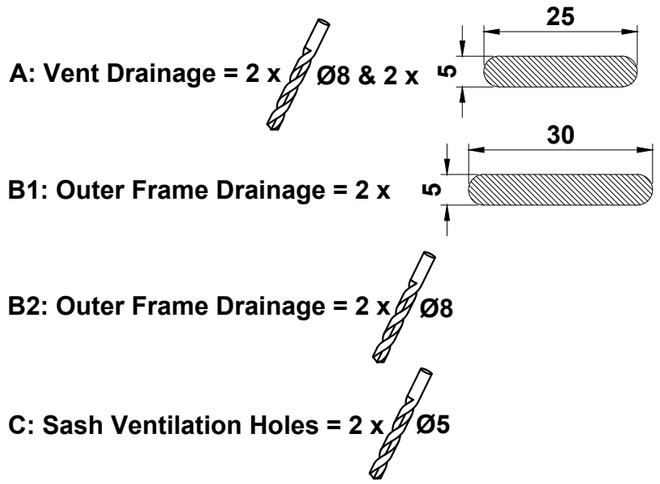

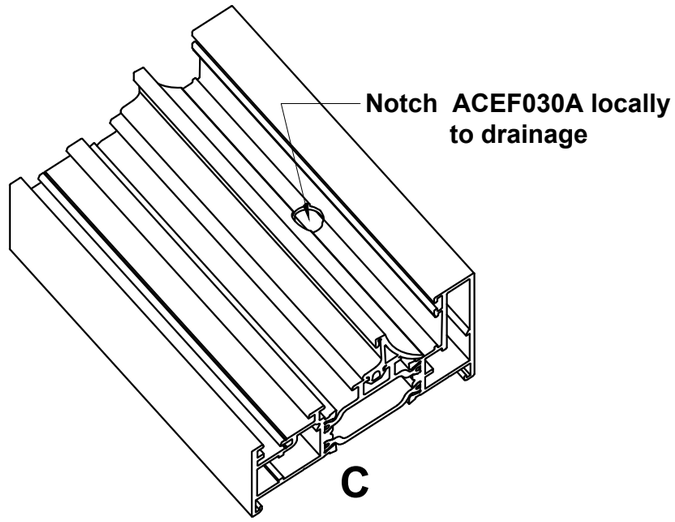

Important Note: All exposed aluminium should be coated using ACSIL014 or painted to match the frame.

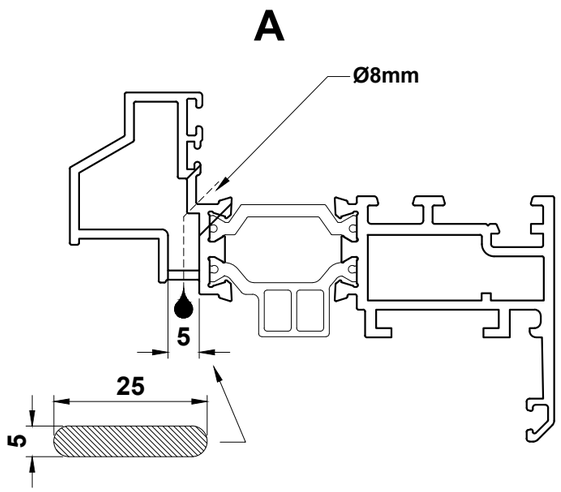

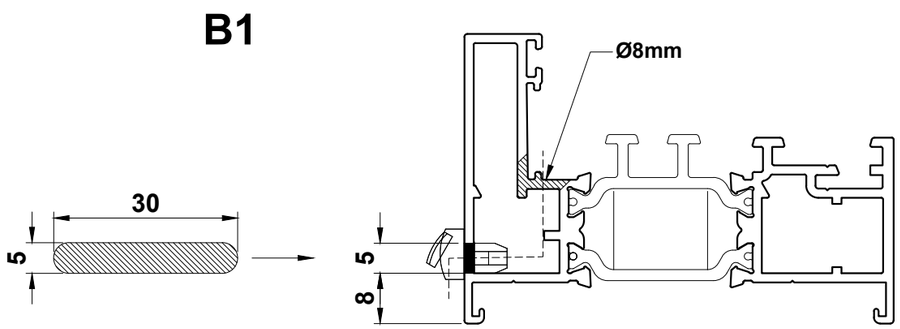

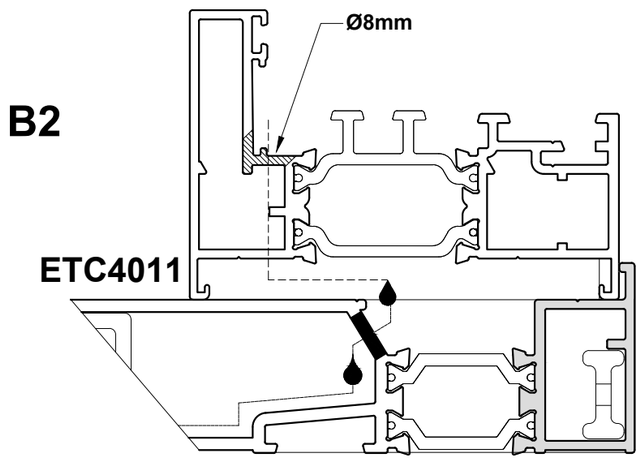

Do Not Scale From This Drawing

Window Drainage

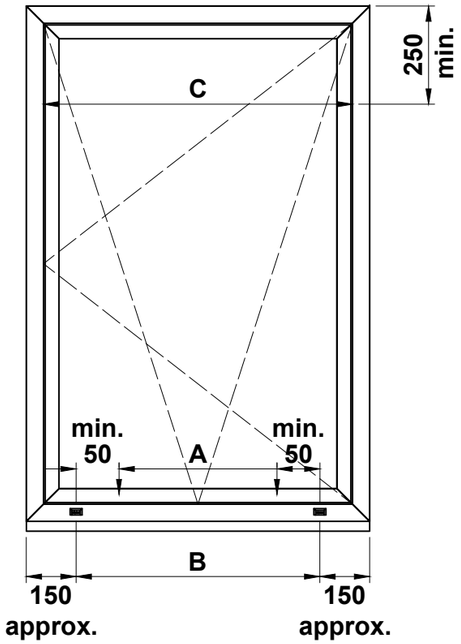

A: Vent Drainage = 2 x

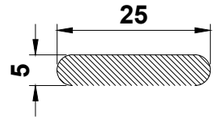

B1: Outer Frame Drainage = 2 x

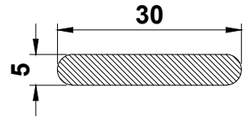

B2: Outer Frame Drainage = 2 x Ø8 Or 2 x

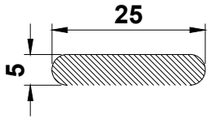

C: Sash Ventilation Holes = 2 x Ø5

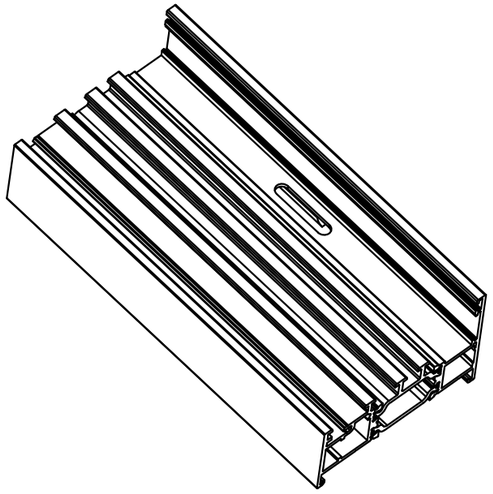

Important Note: All exposed aluminium should be coated using ACSIL014 or painted to match the frame.

A

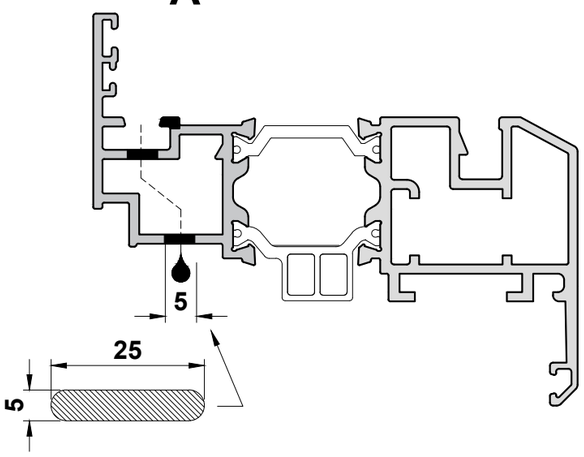

B1

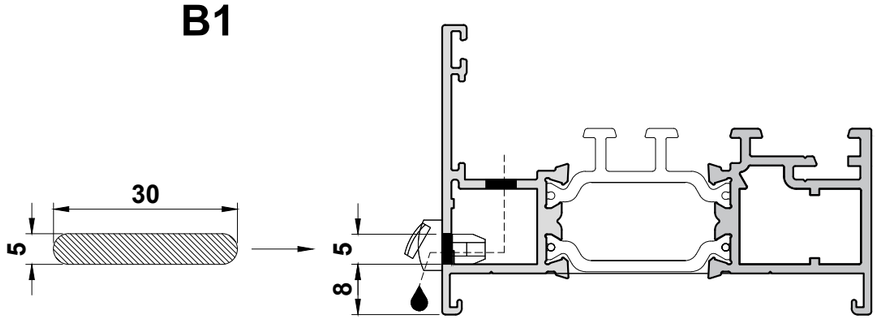

B2

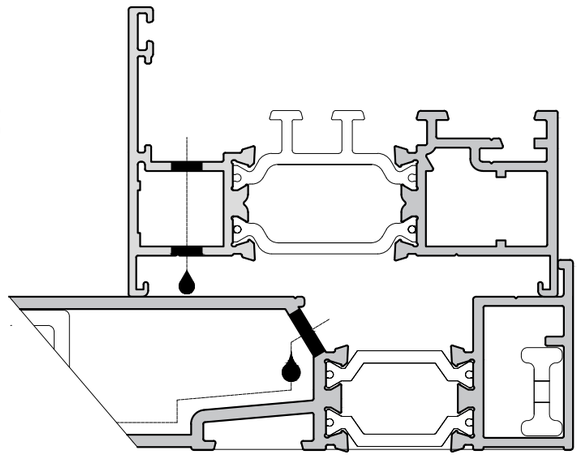

Do Not Scale From This Drawing

Mullion/Transom Detail

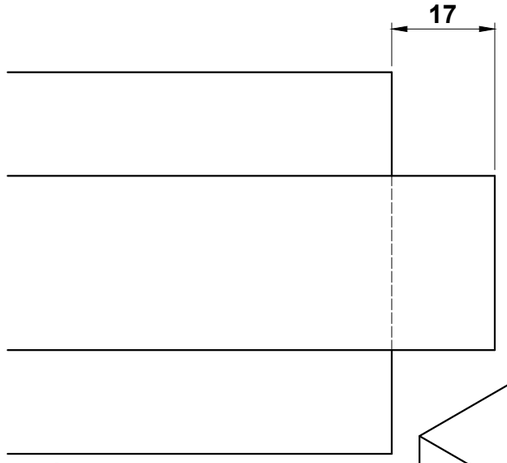

ACET4931 - Drill Jig
Note: Jig must be clamped in position
to avoid risk of injury.

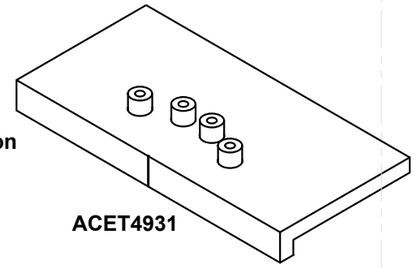

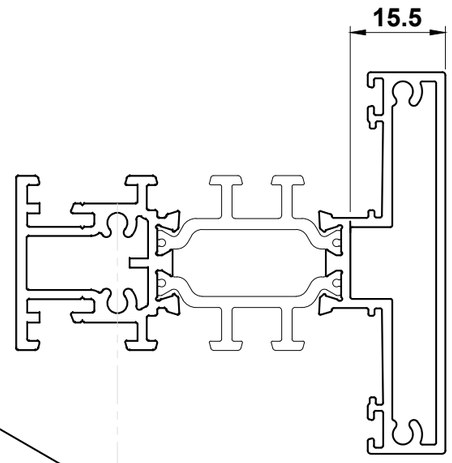

ACVL029

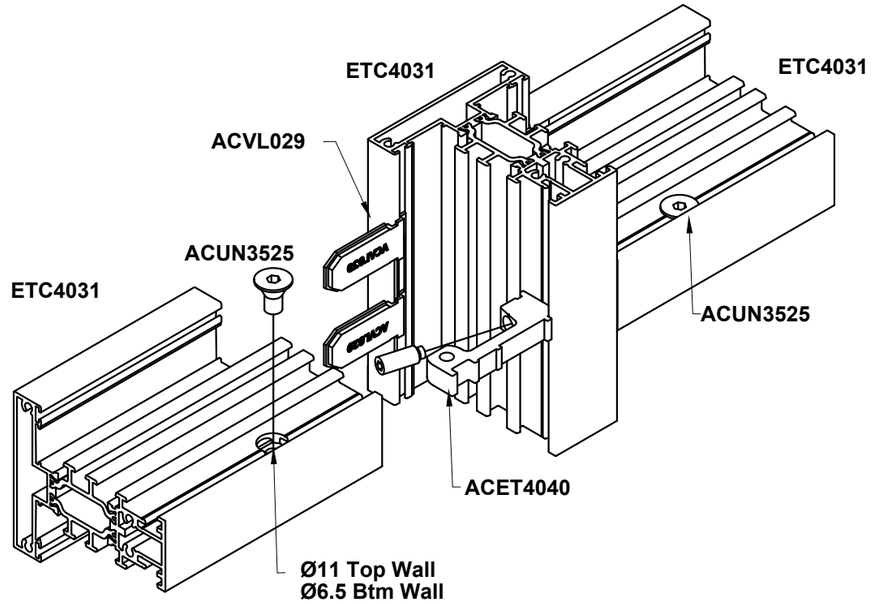

Ø11 Top Wall
Ø6.5 Btm Wall
Use drill jig ACET4931

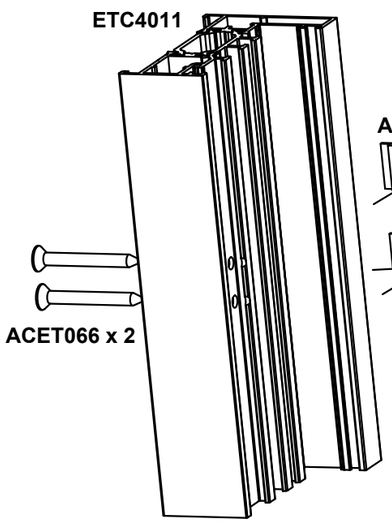

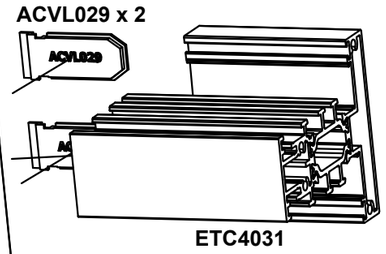

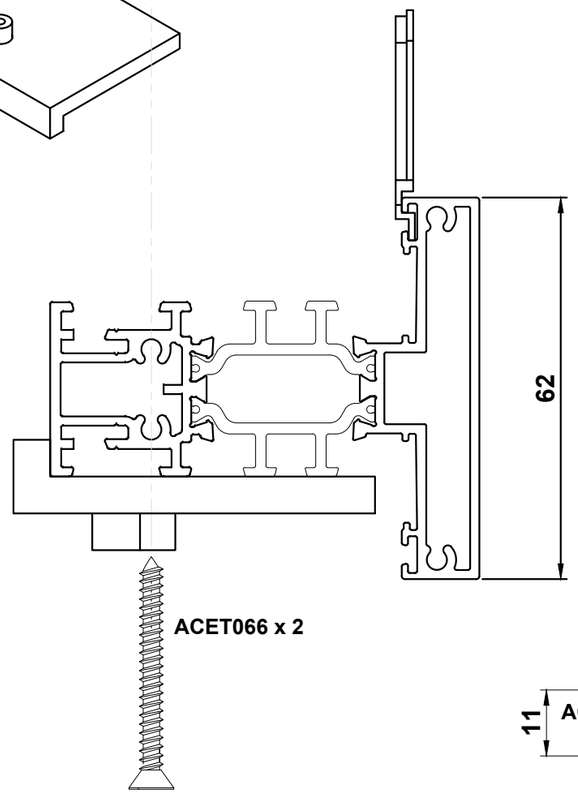

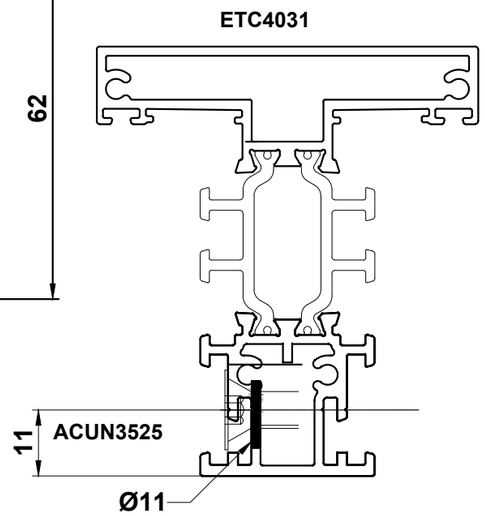

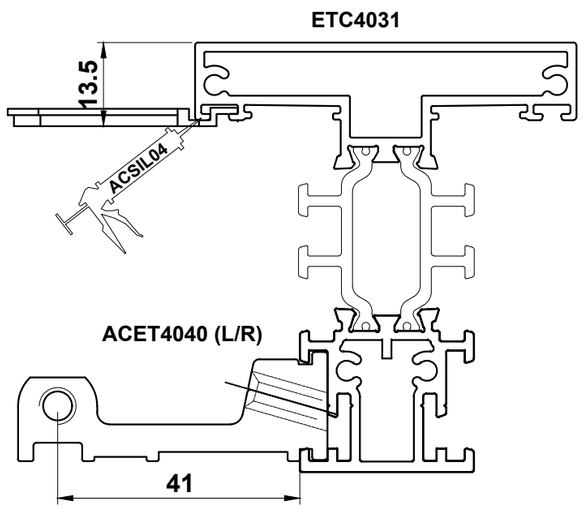

Note:
End mill cutters can be ordered through Smart Systems Ltd.
Please contact the Technical Department for an order form.
Standard delivery is 2-3 weeks approx.

Do Not Scale From This Drawing

Mullion/Transom Detail

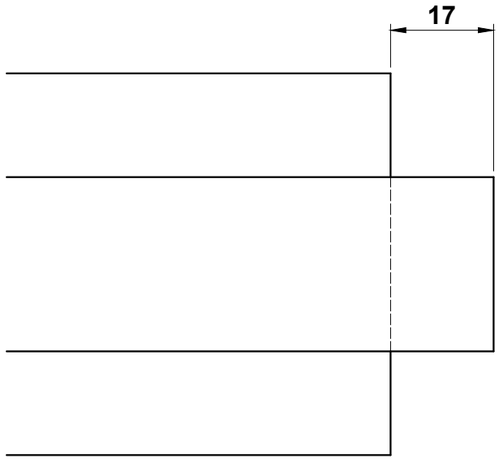

ACET4932 - Drill Jig
Note: Jig must be clamped in position to avoid risk of injury.

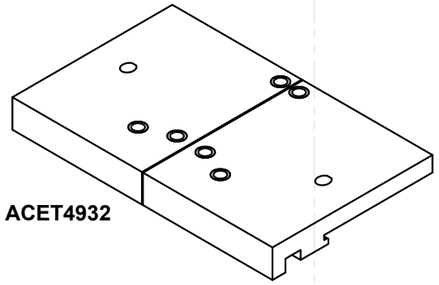

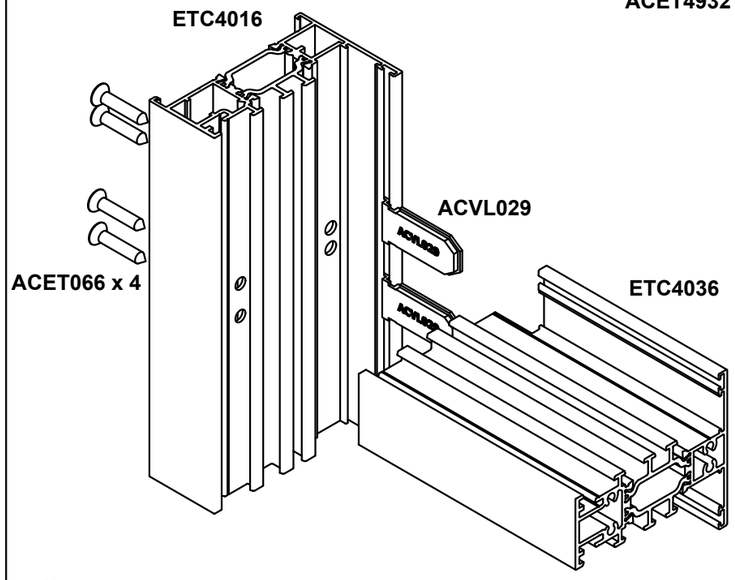

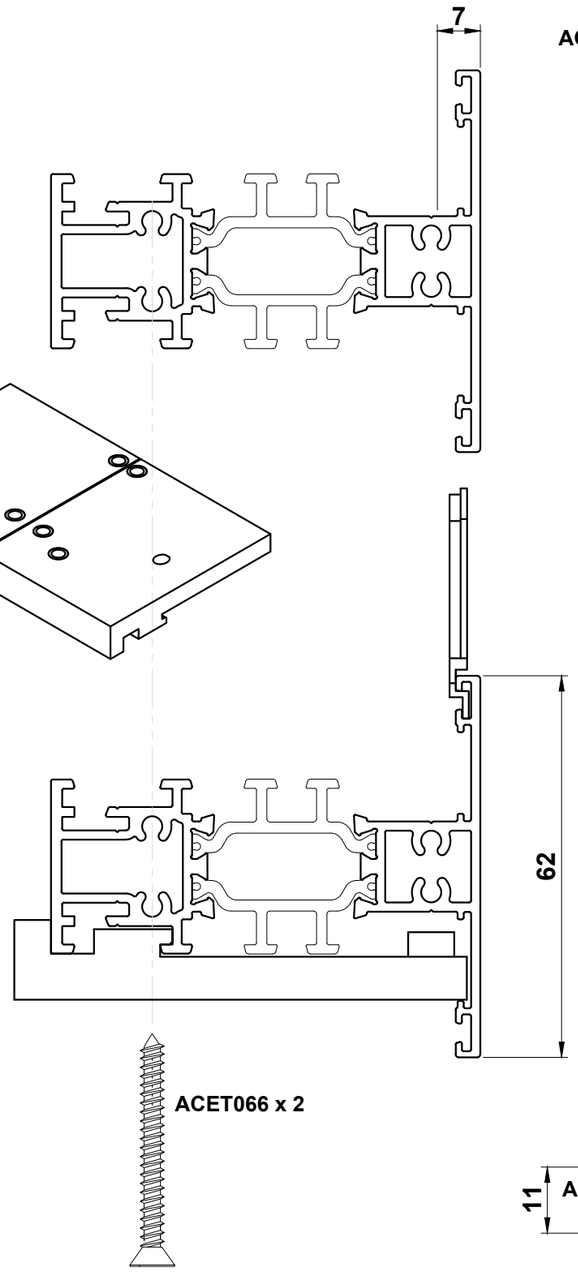

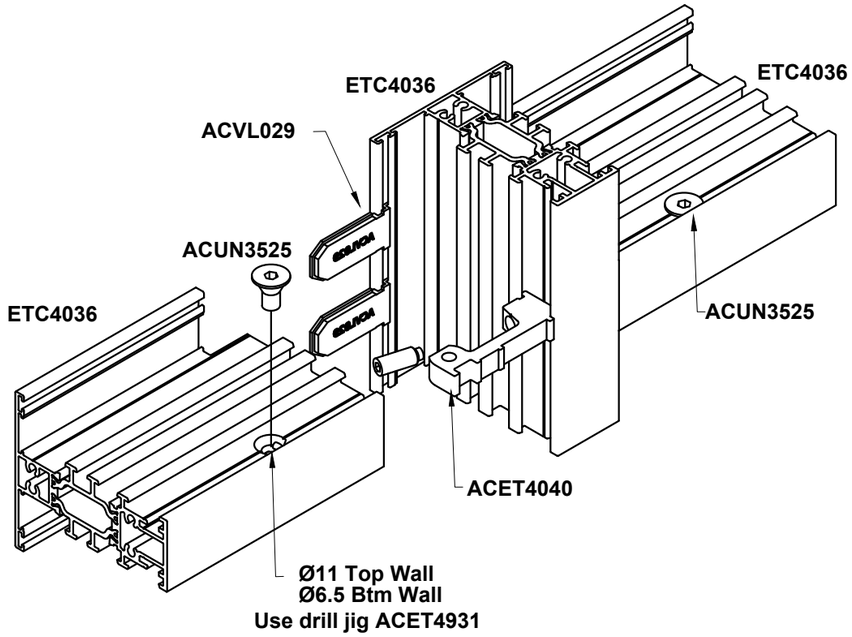

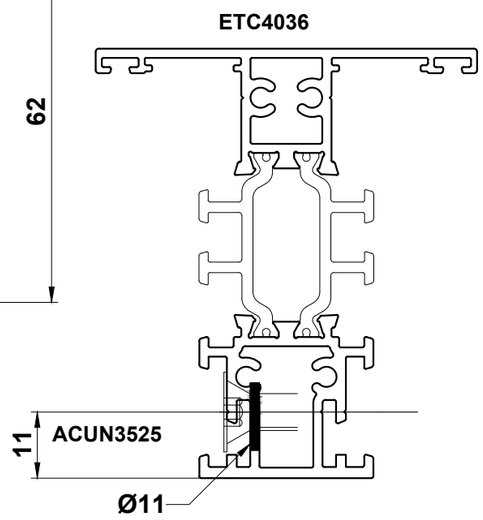

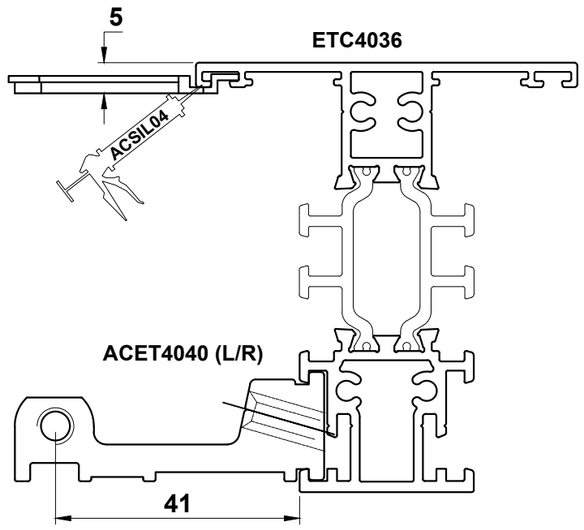

Note:
End mill cutters can be ordered through Smart Systems Ltd.
Please contact the Technical Department for an order form.
Standard delivery is 2-3 weeks approx.

Do Not Scale From This Drawing

Glazing Chart

ETC4011
ETC4014
ETC4021
ETC4031
ETC4021

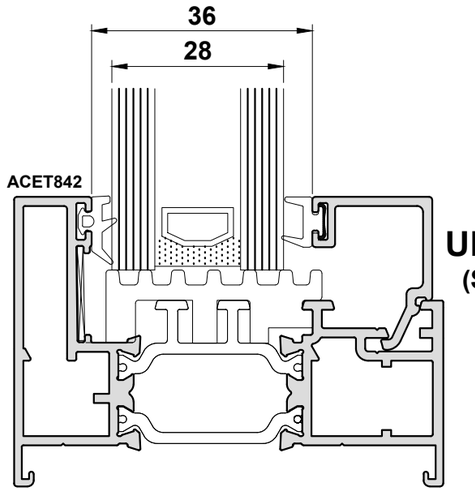

UN3160G
(Stepped)

ETC4011
ETC4014
ETC4021
ETC4031
ETC4021

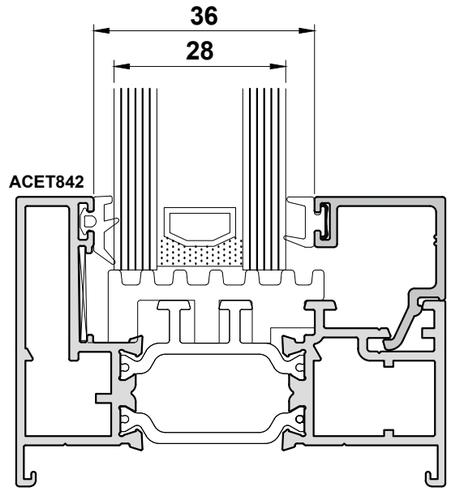

ETC4067G

ETC4011
ETC4014
ETC4021
ETC4031
ETC4021

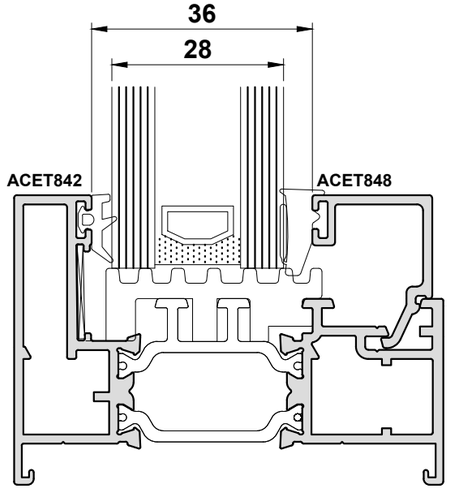

UN3160
(Stepped)

ETC4011
ETC4014
ETC4021
ETC4031
ETC4021

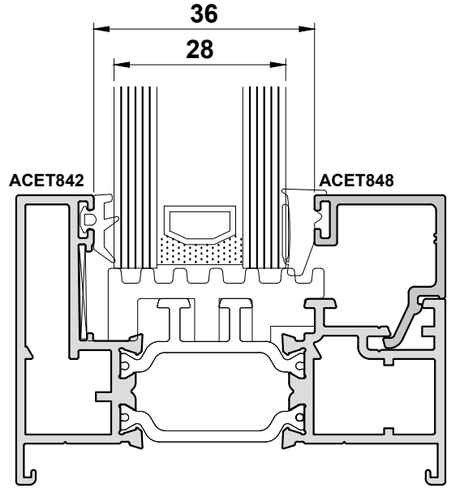

ETC4067

Do Not Scale From This Drawing

Glazing Chart

ETC4011
ETC4014
ETC4021
ETC4031
ETC4021

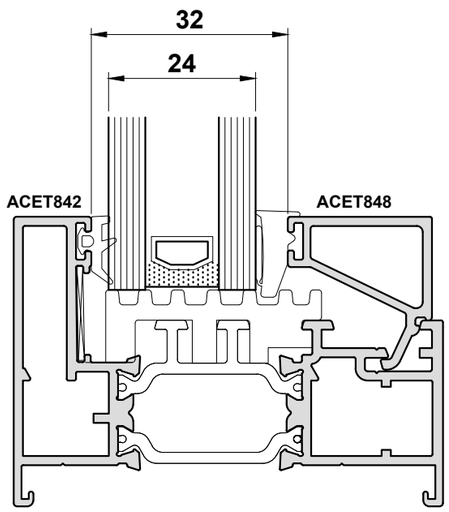

UN3162
(Stepped)

ETC4011
ETC4014
ETC4021
ETC4031
ETC4021

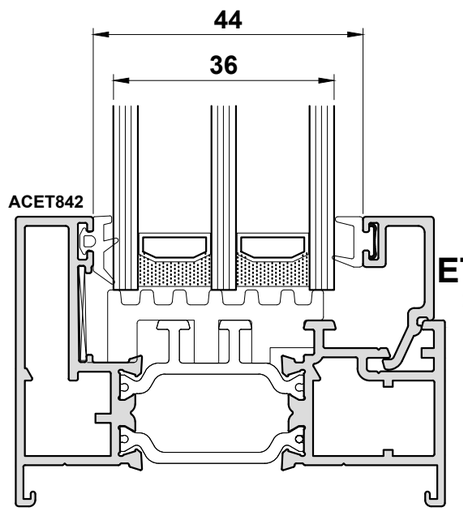

ETC4179G
(Stepped)

ETC4011
ETC4014
ETC4021
ETC4031
ETC4021

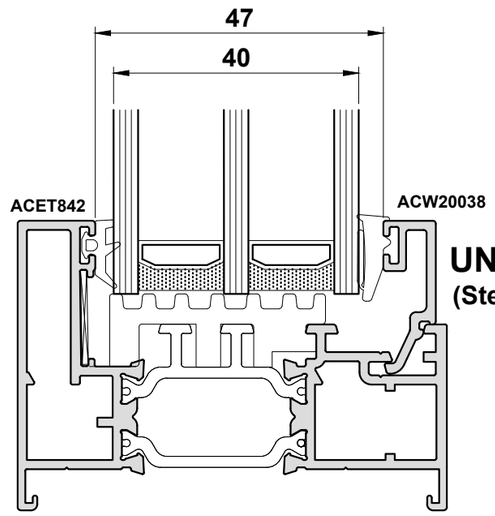

UN3166
(Stepped)

ETC4011
ETC4014
ETC4021
ETC4031
ETC4021

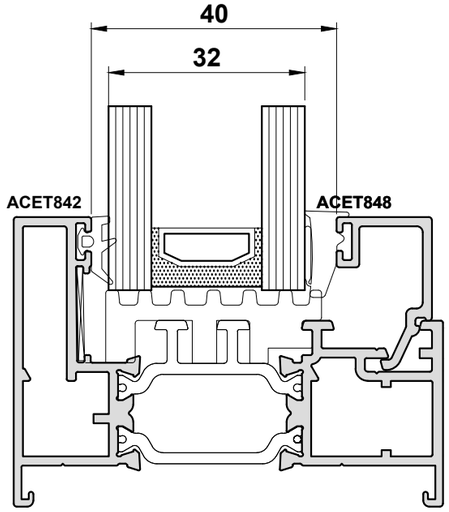

UN3164
(Stepped)

ETC4011
ETC4014
ETC4021
ETC4031
ETC4021

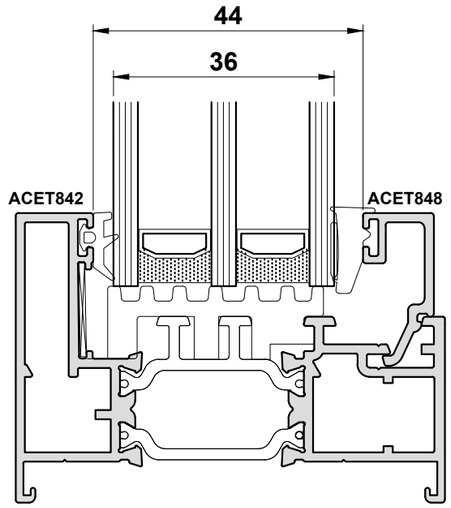

ETC4179
(Stepped)

ETC4011
ETC4014
ETC4021
ETC4031
ETC4021

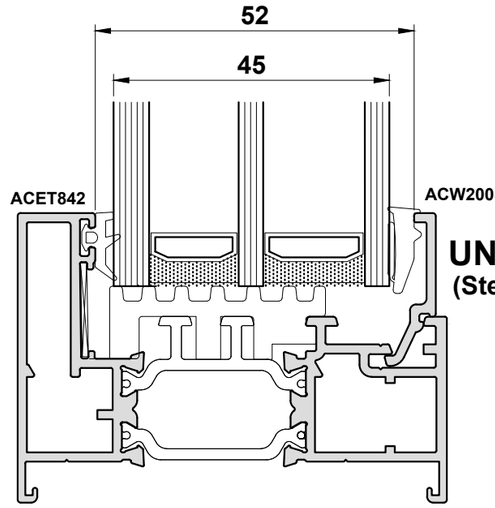

UN3168
(Stepped)

Do Not Scale From This Drawing

Glazing Chart

ETC4011
ETC4014
ETC4021
ETC4031
ETC4021

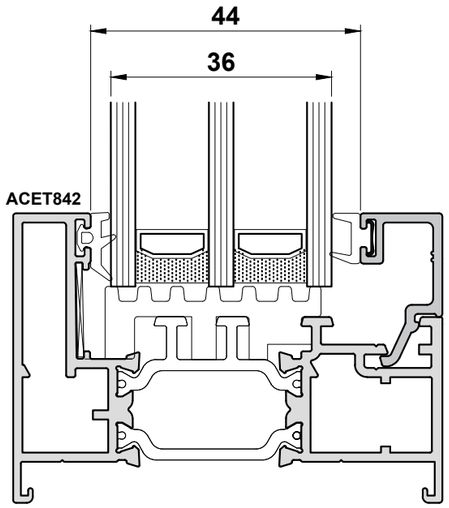

ETC4061G

ETC4011
ETC4014
ETC4021
ETC4031
ETC4021

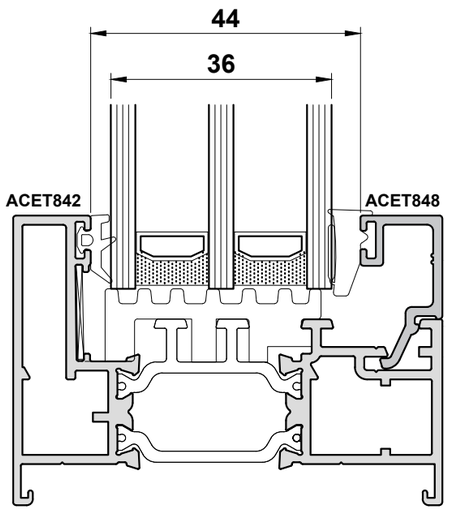

ETC4061

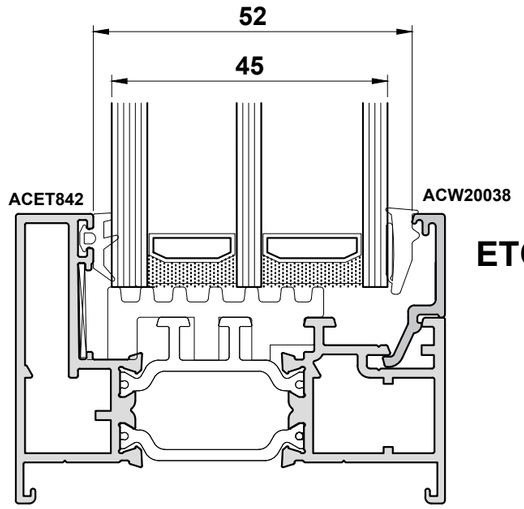

ETC4063

Glazing Chart

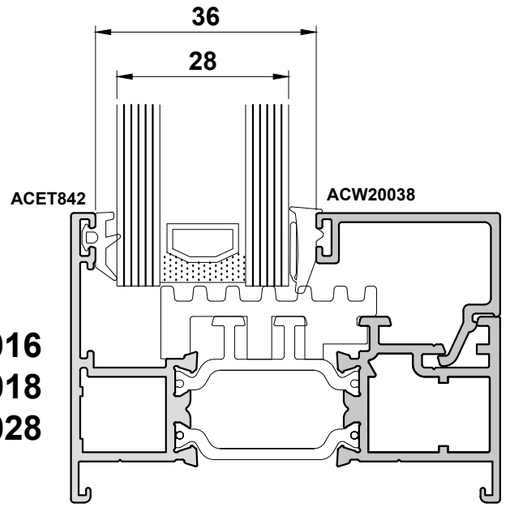

ETC4016
ETC4018
ETC4028

ETC4079

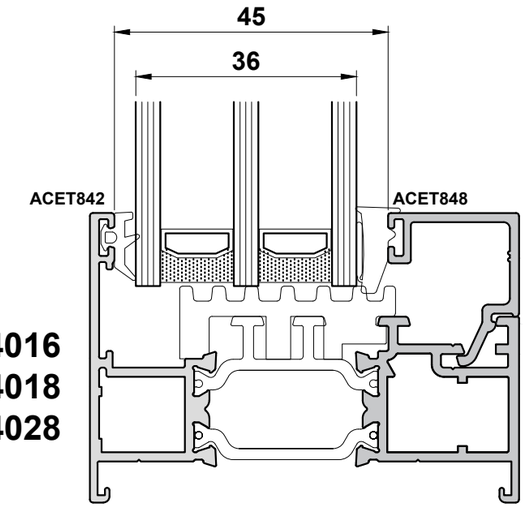

ETC4016
ETC4018
ETC4028

ETC4067

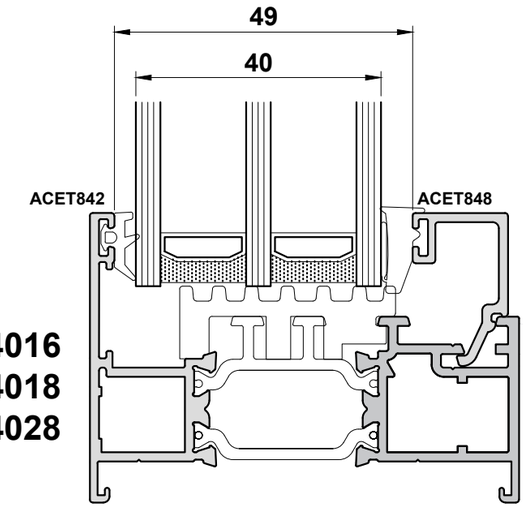

ETC4016
ETC4018
ETC4028

UN3164
(Stepped)

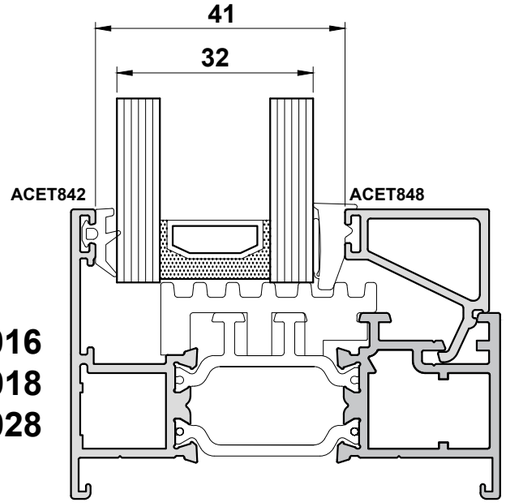

ETC4016
ETC4018
ETC4028

UN3162
(Stepped)

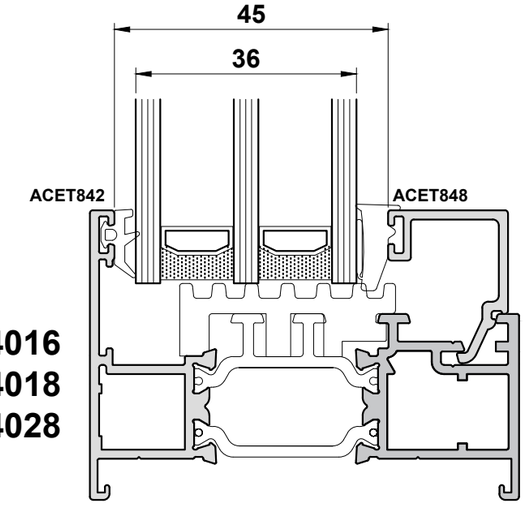

ETC4016
ETC4018
ETC4028

UN3160
(Stepped)

Do Not Scale From This Drawing

Glazing Chart

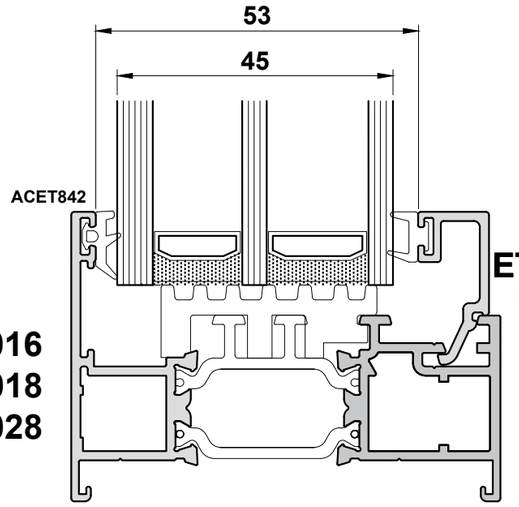

ETC4016
ETC4018
ETC4028

ETC4179G
(Stepped)

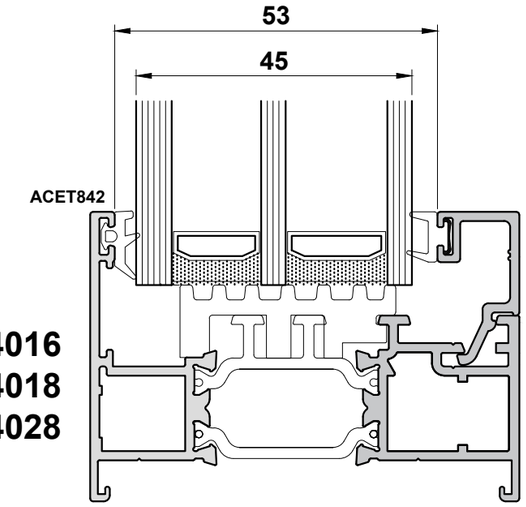

ETC4016
ETC4018
ETC4028

ETC4061G

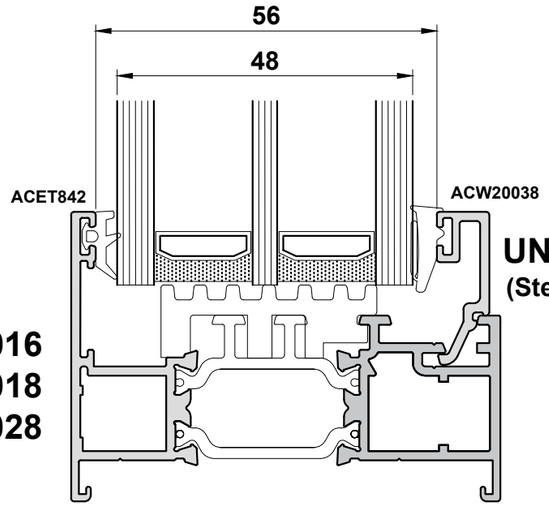

ETC4016
ETC4018
ETC4028

UN3166
(Stepped)

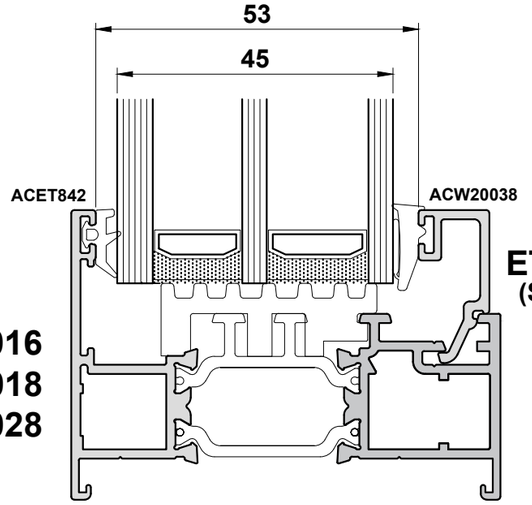

ETC4016
ETC4018
ETC4028

ETC4179
(Stepped)

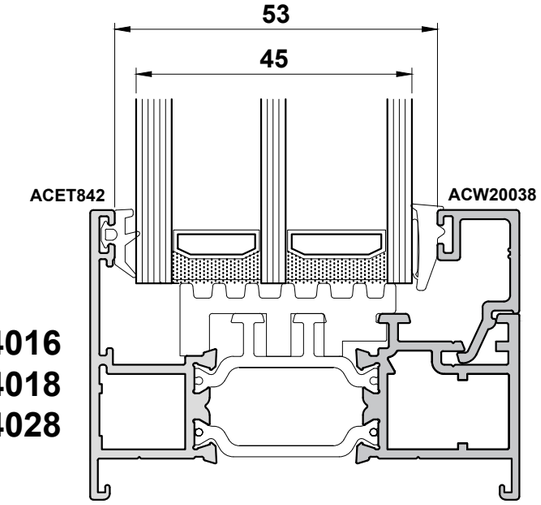

ETC4016
ETC4018
ETC4028

ETC4061

Do Not Scale From This Drawing

Glazing Chart

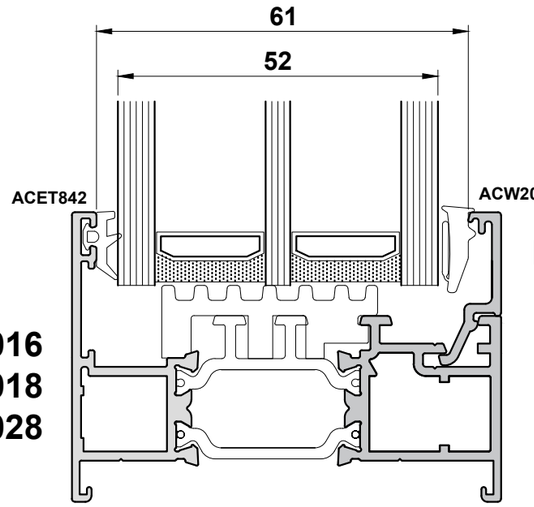

ETC4063

ETC4016
ETC4018
ETC4028

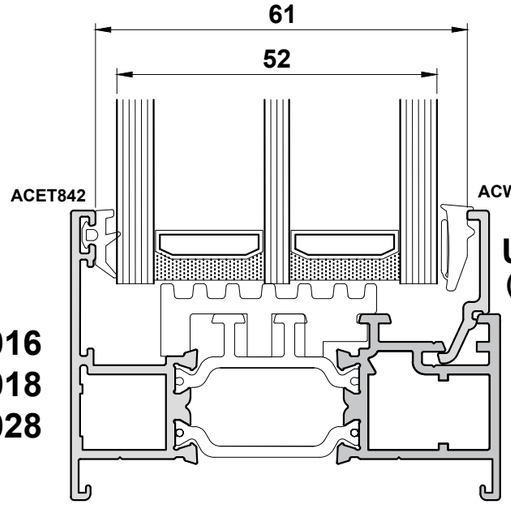

UN3168
(Stepped)

ETC4016
ETC4018
ETC4028

Alitherm 400 Tilt & Turn

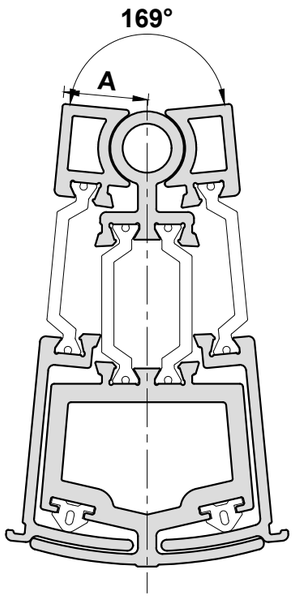

Important Note:
All joints must be adequately sealed using ACSIL04

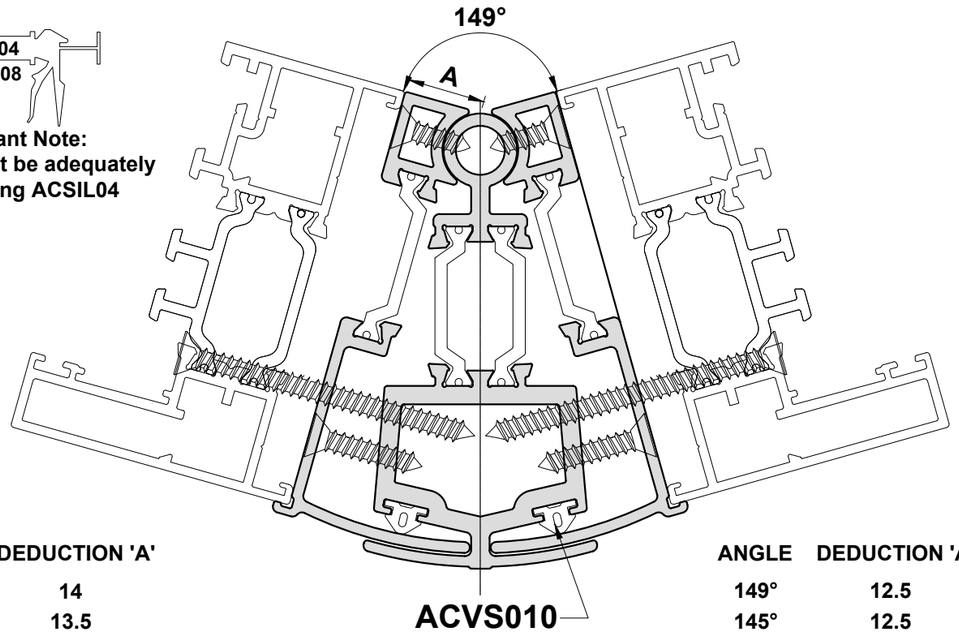

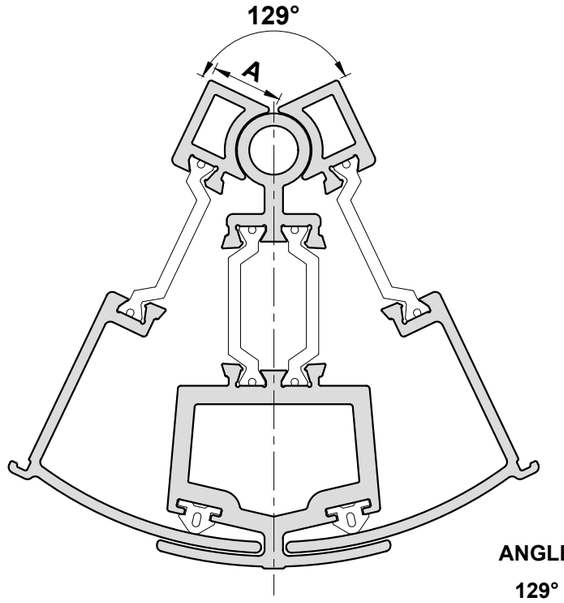

ANGLE	DEDUCTION 'A'
169°	14
165°	13.5
160°	13.6
155°	13
150°	13

ANGLE	DEDUCTION 'A'
149°	12.5
145°	12.5
140°	12
135°	12
130°	11.5

ANGLE	DEDUCTION 'A'
129°	11.5
125°	11.5
120°	11
115°	10.5

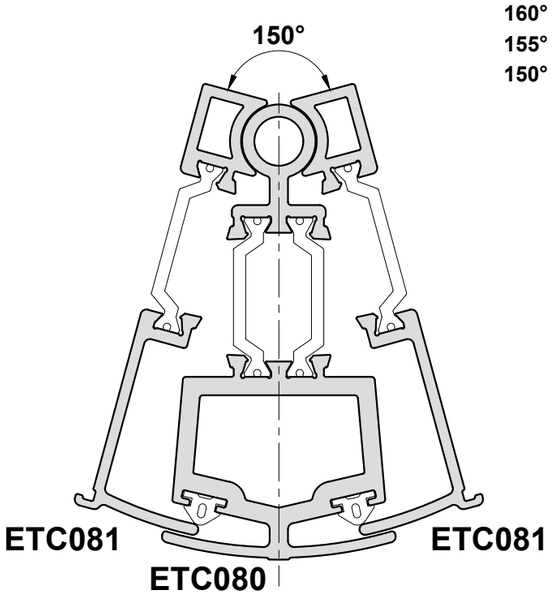

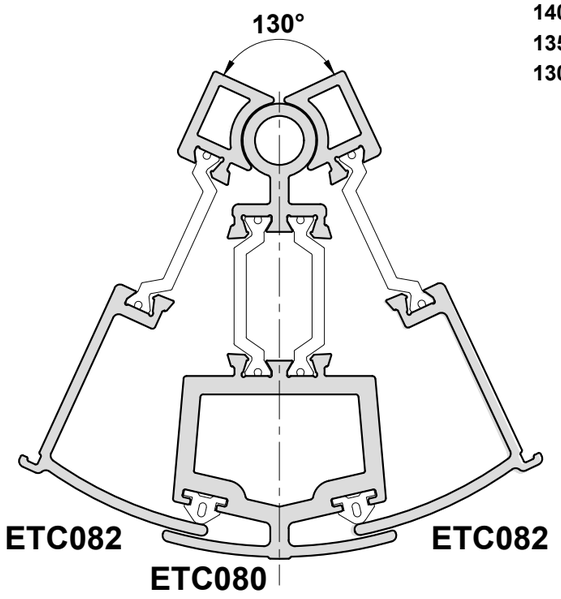

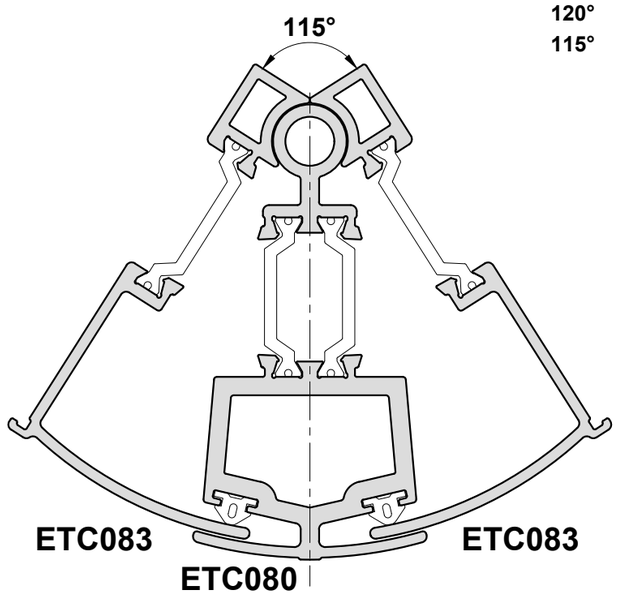

Do Not Scale From This Drawing

ISSUED : June 2025

Fixed Bay Pole Angle / Deductions

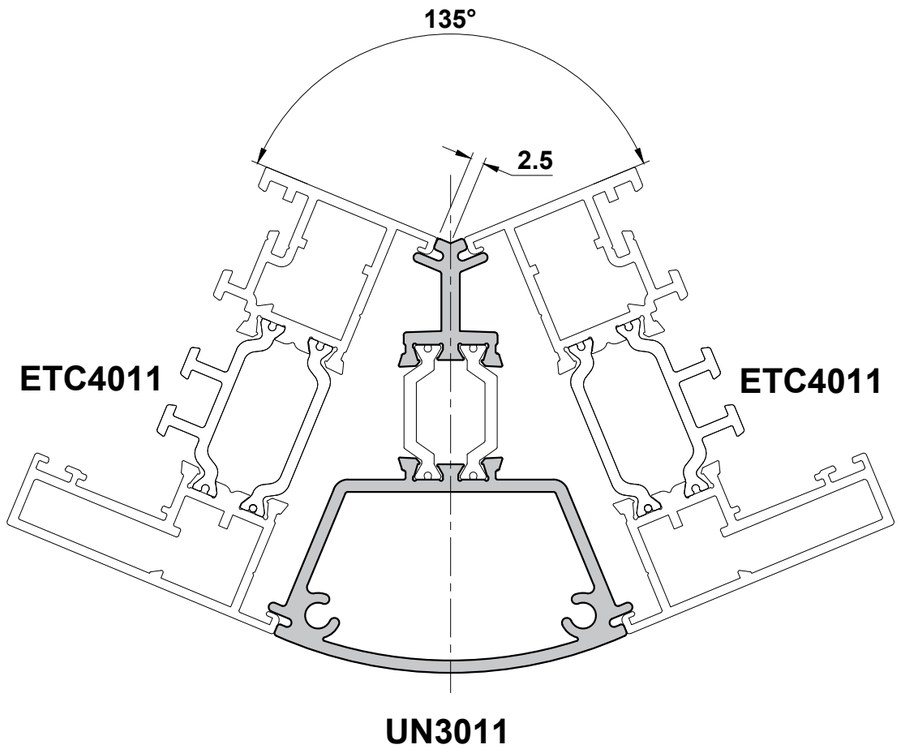

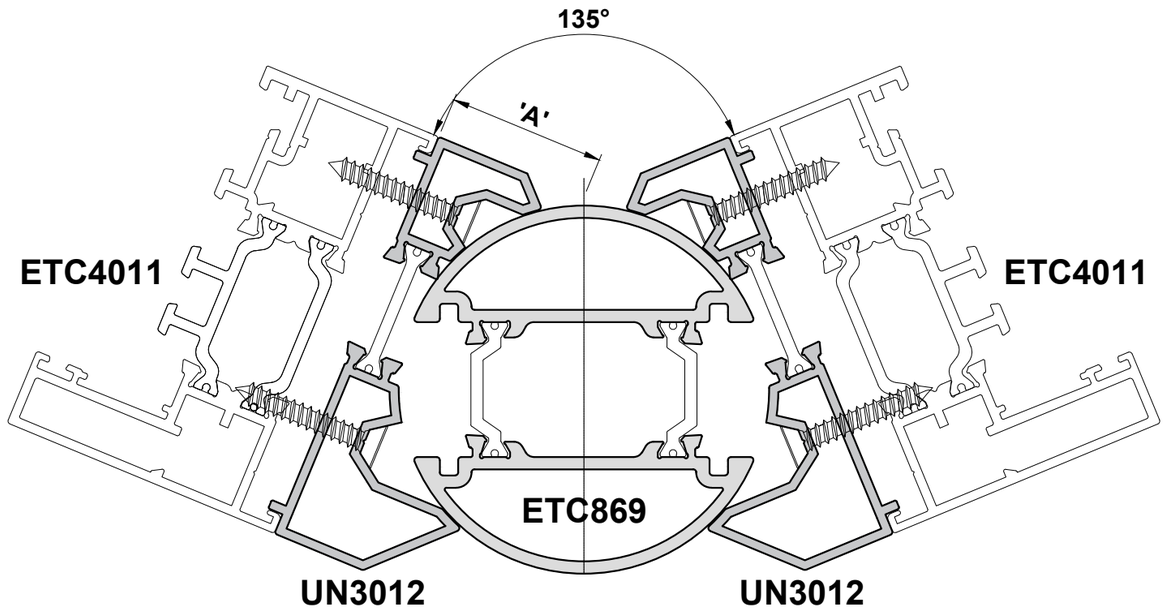

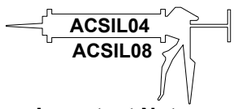

Important Note:
All joints must be adequately sealed using ACSIL04

ANGLE	DEDUCTION 'A'
180°	37.5
175°	36
170°	35
165°	33.5
160°	32.5
155°	31
150°	30
145°	28.5
140°	27
135°	25.5

Do Not Scale From This Drawing

Section F

F ETC

Sawing Tables

Section F

Cutting Information - Fixing Light Frame - Equal Leg ETC4011

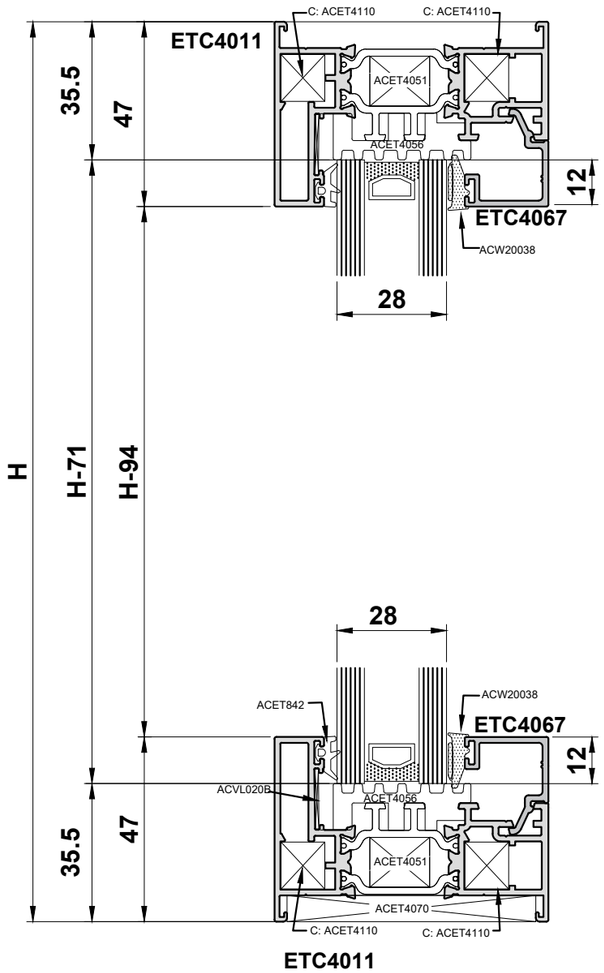

Sections

ETC4011		2		H
ETC4011		2		W
Bead		2		W - 61
Bead		2		H - 94

Glass
W - 71
H - 71

Accessories

ACVL020B	4	Chevron
ACET4110	8	Cleat Outerframe
ACET842	2(W+H)	E Gasket
ACW20038	2(W+H)	Wedge Gasket
ACGSL045	2	Drainage Cap
ACET4041	2	Bridge Packer

Foam

ACET4070	2(W+H)	Foam
ACET4051	2(W+H)	Foam
ACET4056	2(W+H)	Foam

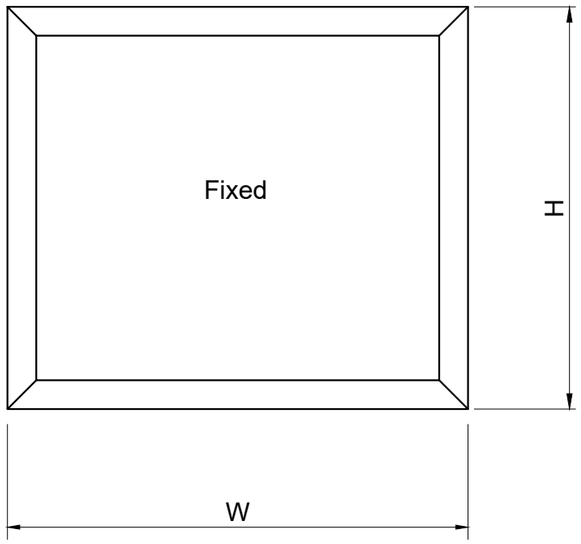

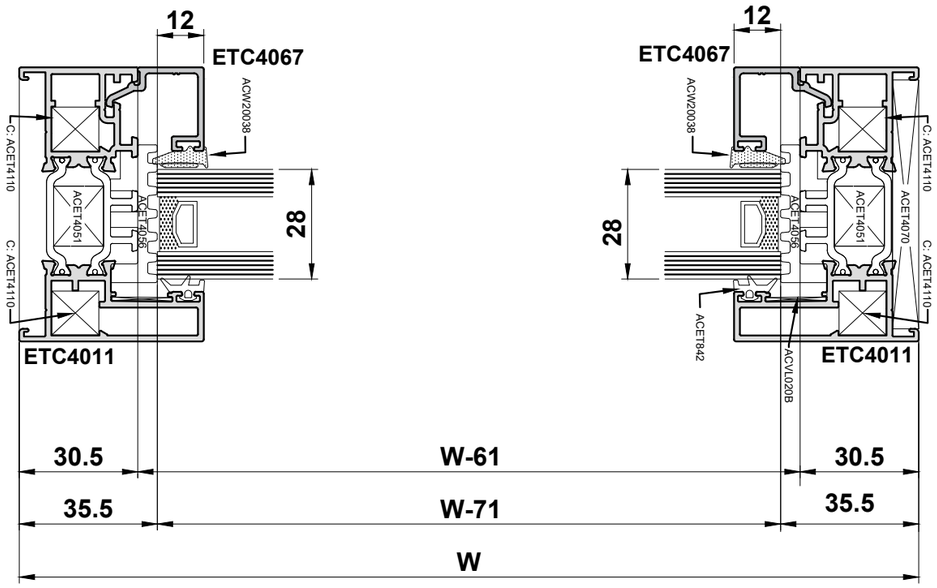

Do Not Scale From This Drawing

Cutting Information

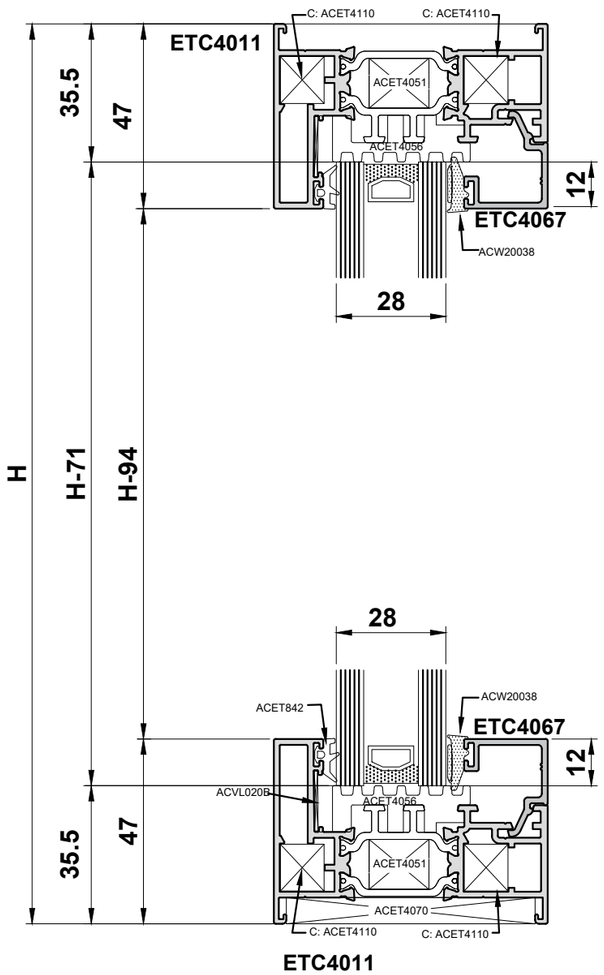

Sections

ETC4011		2		H
ETC4011		2		W
ETC4031		1		H - 61
Bead		2		W1 - 44.5
Bead		2		W2 - 44.5
Bead		4		H - 94

	Glass
A	W1 - 54.5 x H-71
B	W2 - 54.5 x H-71

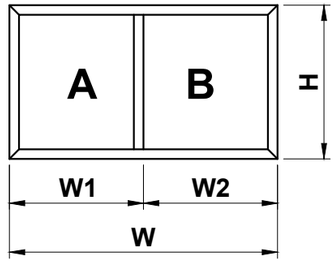

Accessories

ACVL020B	4	Chevron
ACET4110	8	Cleat Outerframe
ACVL029	4	Anti-Twist Clip
ACET066	4	Mullion Screws
ACET842	(2W)+(4H)	E Gasket
ACW20038	(2W)+(4H)	Wedge Gasket
ACGSL045	2	Drainage Cap
ACET4041	4	Bridge Packer

Foam

ACET4070	2(W+H)	Foam
ACET4051	2(W+H)	Foam
ACET4056	(2 x W) + (4 x H)	Foam

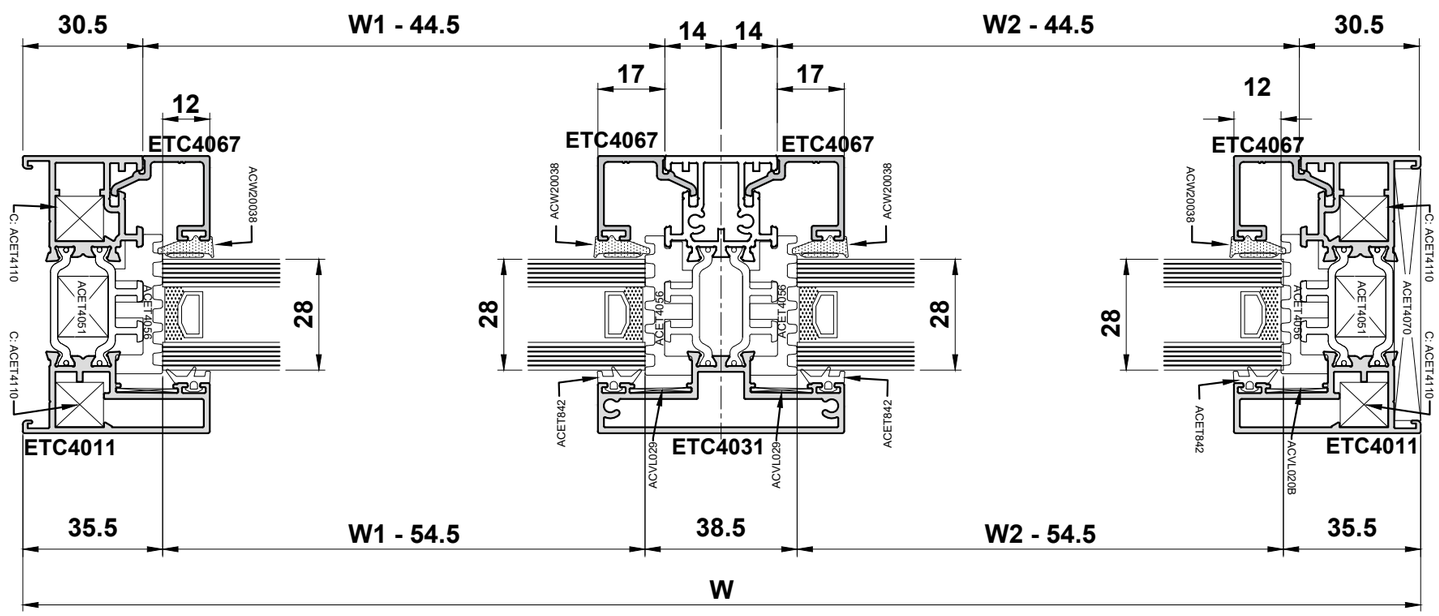

Do Not Scale From This Drawing

ISSUED : June 2025

Cutting Information

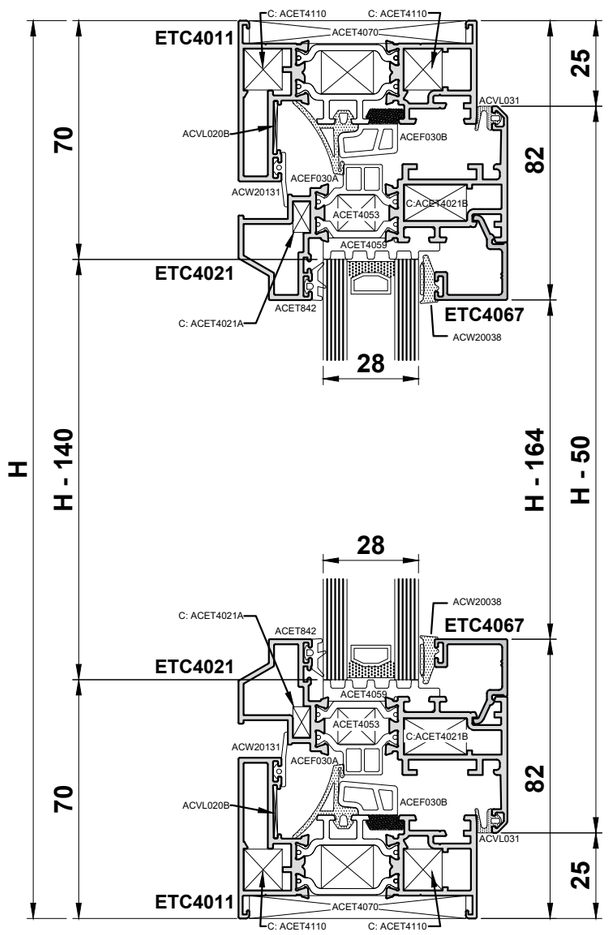

Sections

ETC4011		2		H
ETC4011		2		W
ETC4021		2		H - 50
ETC4021		2		W - 50
Bead		2		W - 130
Bead		2		H - 164

Glass
W - 140
H - 140

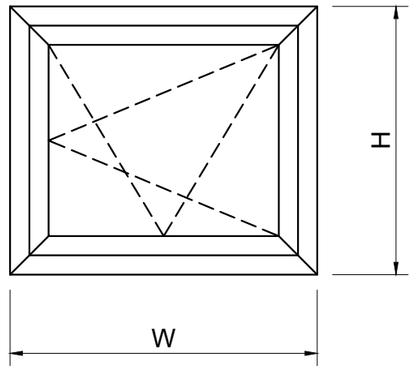

Accessories

ACET311	4	Chevron (sash)
ACVL020B	4	Chevron (frame)
ACET4110	8	Frame Cleat
ACET4021A	4	Sash Cleat (outer)
ACET4021B	4	Sash Cleat (inner)
ACW20131	2(W+H)	External Flat Gasket (frame)
ACEF030A	2(W+H)	Centre Gasket (frame)
ACEF030B	2(W+H)	Centre Gasket (frame)
ACEF031B	4	Centre Gasket Corner (frame)
ACVL031	2(W+H)	Flipper Gasket (sash)
ACET4042	6	Bridge Packer
ACET842	2(W+H)	Gasket E
ACW20038	2(W+H)	Wedge Gasket
ACGSL045	2	Drainage Cap

Please refer to the SB Chrono or Fapim manual for tilt & turn hardware

Foam

ACET4070	2(W+H)	Foam (frame)
ACET4051	2(W+H)	Foam (frame)
ACET4053	2(W+H)	Foam (sash)
ACET4059	2(W+H)	Foam (sash)

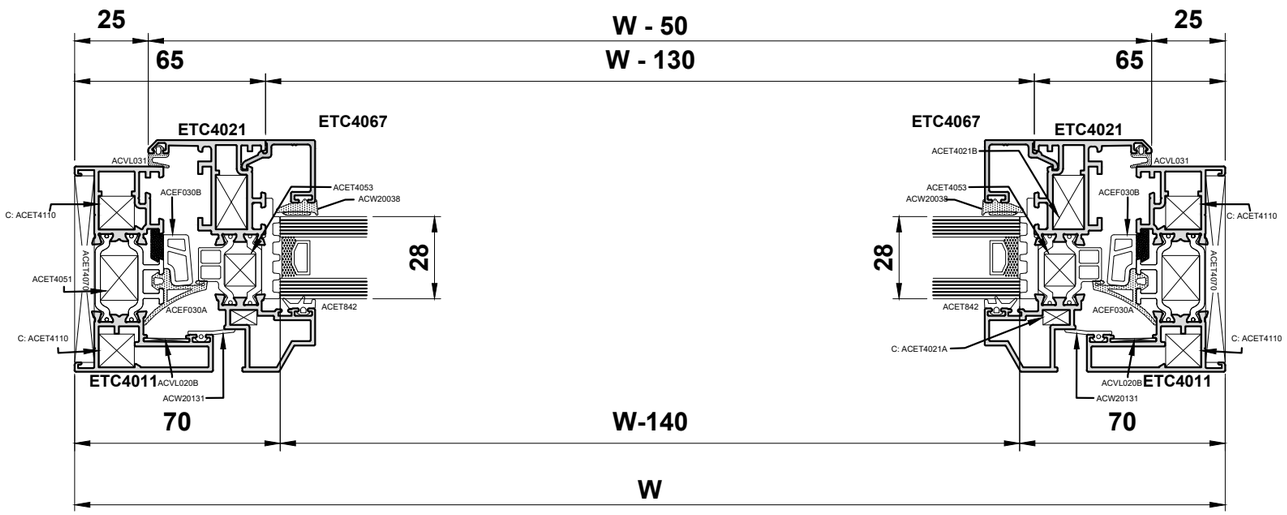

Do Not Scale From This Drawing

Cutting Information

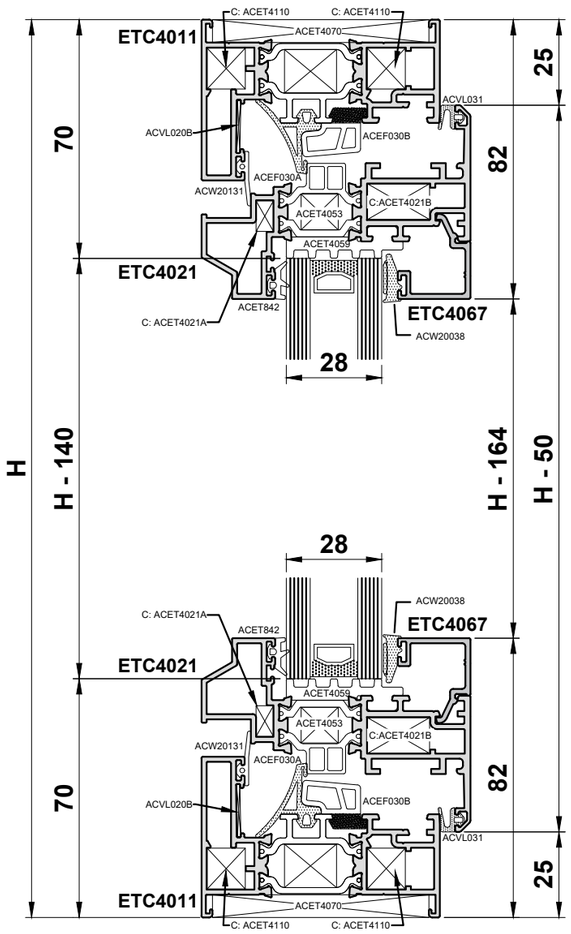

Sections

ETC4011		2		H
ETC4011		2		W
ETC4021		2		H - 50
ETC4021		2		W1 - 34
ETC4031		1		H - 61
Bead		2		W1 - 114
Bead		2		H - 164
Bead		2		W2 - 44.5
Bead		2		H - 94

Foam

ACET4070	2(W+H)	Foam (frame)
ACET4051	2(W+H)	Foam (frame)
ACET4056	(2 x W2) + (2 x H)	Foam (frame)
ACET4053	(2 x W1) + (2 x H)	Foam (sash)
ACET4059	(2 x W1) + (2 x H)	Foam (sash)

Accessories

ACET311	4	Chevron (sash)
ACVL020B	4	Chevron (frame)
ACET4110	8	Frame Cleat
ACET4021A	4	Sash Cleat (outer)
ACET4021B	4	Sash Cleat (inner)
ACVL029	4	Anti-Twist Clip (mullion)
ACET066	4	Mullion Screws
ACW20131	2(W1+H)	External Flat Gasket (frame A)
ACEF030A	2(W1+H)	Centre Gasket (frame A)
ACEF030B	2(W1+H)	Centre Gasket (frame A)
ACEF031B	4	Centre Gasket Corner (frame A)
ACVL031	2(W1+H)	Flipper Gasket (sash)
ACET4041	2	Bridge Packer (frame B)
ACET4042	6	Bridge Packer (sash)
ACET842	(2W)+(4H)	Gasket E
ACW20038	(2W)+(4H)	Wedge Gasket
ACGSL045	4	Drainage Cap

Please refer to the SB Chrono or Fapim manual for tilt & turn hardware

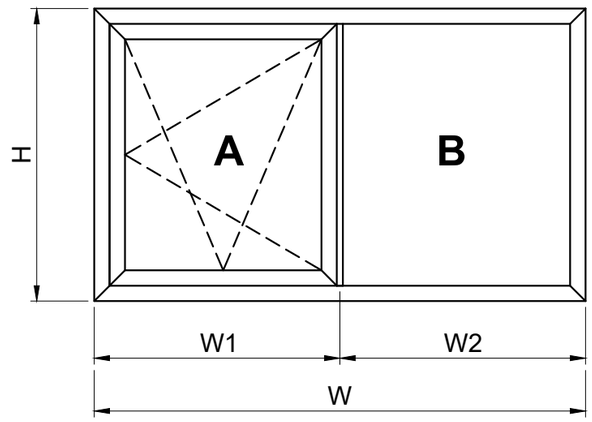

	Glass
A	W1 - 124 x H - 140
B	W2 - 54.5 x H - 71

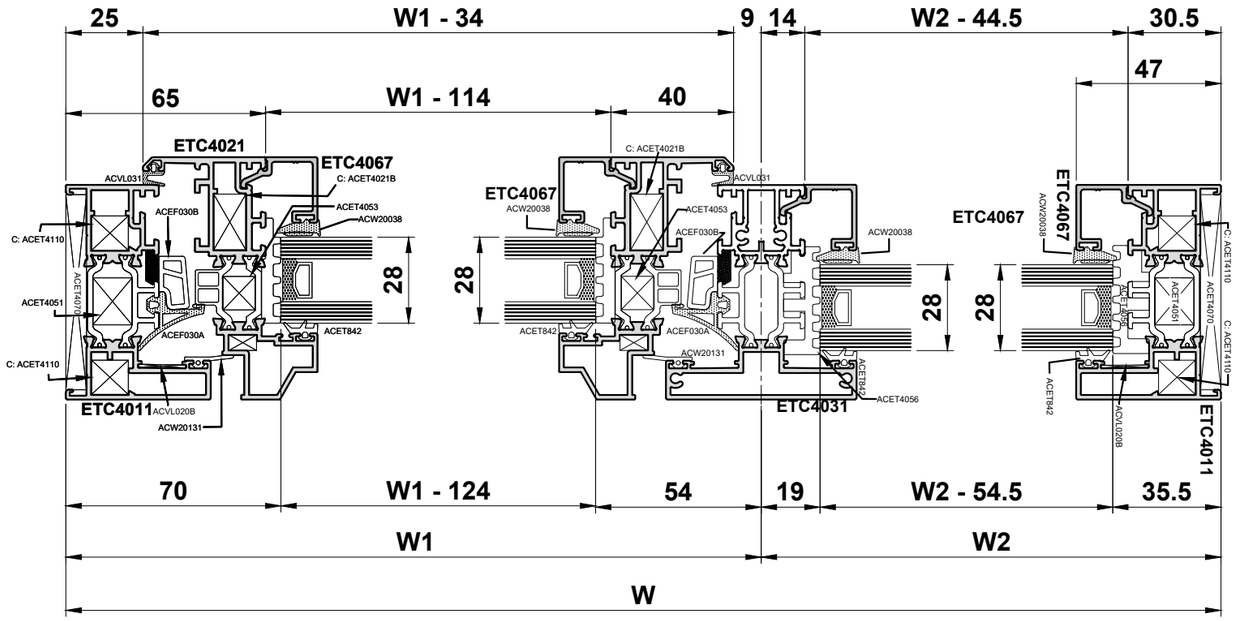

Do Not Scale From This Drawing

Cutting Information

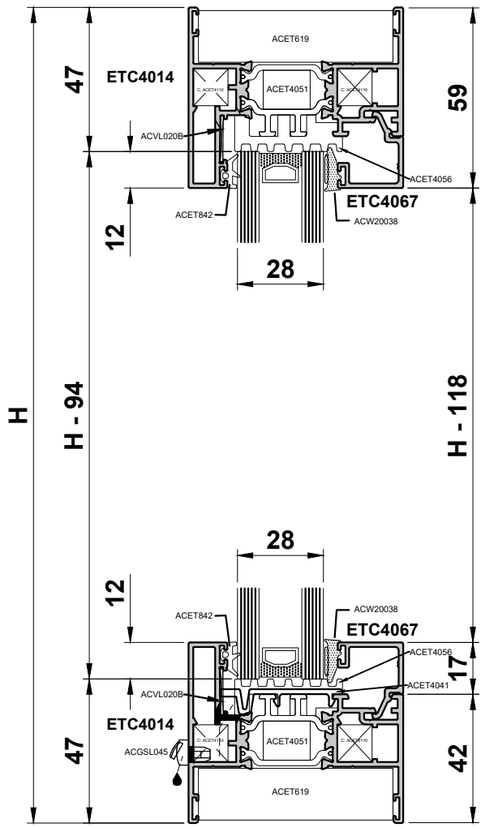

Sections

ETC4014		2		H
ETC4014		2		W
Bead		2		W - 84
Bead		2		H - 118

Glass
W - 94
H - 94

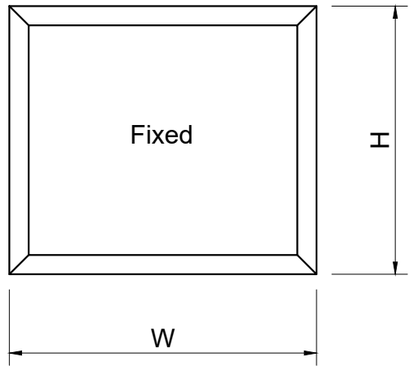

Accessories

ACVL020B	4	Chevron
ACET4110	8	Cleat Outerframe
ACET842	2(W+H)	E Gasket
ACW20038	2(W+H)	Wedge Gasket
ACGSL045	2	Drainage Cap
ACET4041	2	Bridge Packer

Foam

ACET619	2(W+H)	Foam
ACET4051	2(W+H)	Foam
ACET4056	2(W+H)	Foam

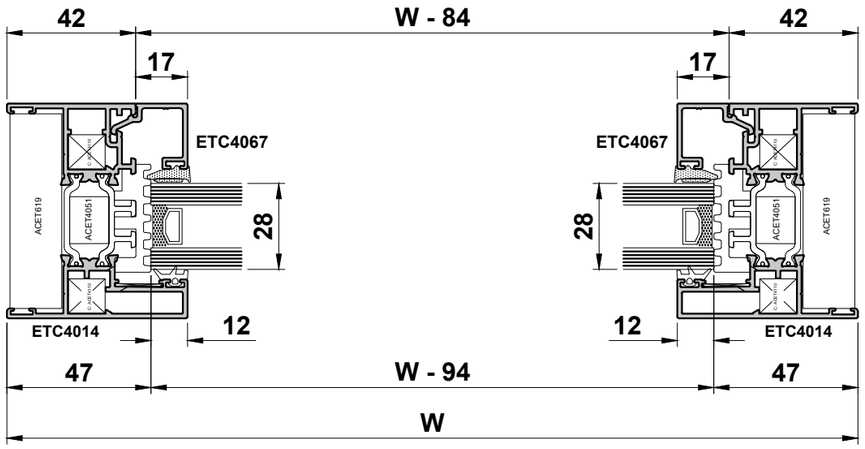

Do Not Scale From This Drawing

Cutting Information

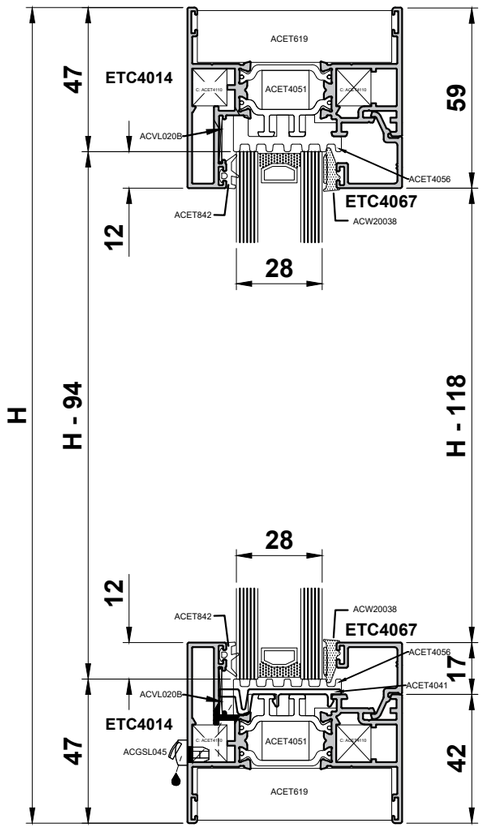

Sections

ETC4014		2		H
ETC4014		2		W
ETC4031		1		H - 84
Bead		2		W1 - 56
Bead		2		W2 - 56
Bead		4		H - 118

	Glass
A	W1 - 66 x H - 94
B	W2 - 66 x H - 94

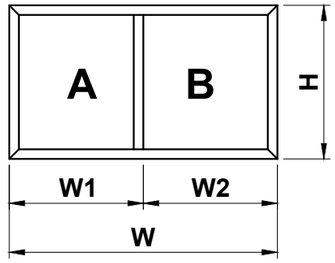

Accessories

ACVL020B	4	Chevron
ACET4110	8	Cleat Outerframe
ACVL029	4	Anti-Twist Clip
ACET066	4	Mullion Screws
ACET842	(2W)+(4H)	E Gasket
ACW20038	(2W)+(4H)	Wedge Gasket
ACGSL045	2	Drainage Cap
ACET4041	4	Bridge Packer

Foam

ACET619	2(W+H)	Foam
ACET4051	2(W+H)	Foam
ACET4056	(2 x W) + (4 x H)	Foam

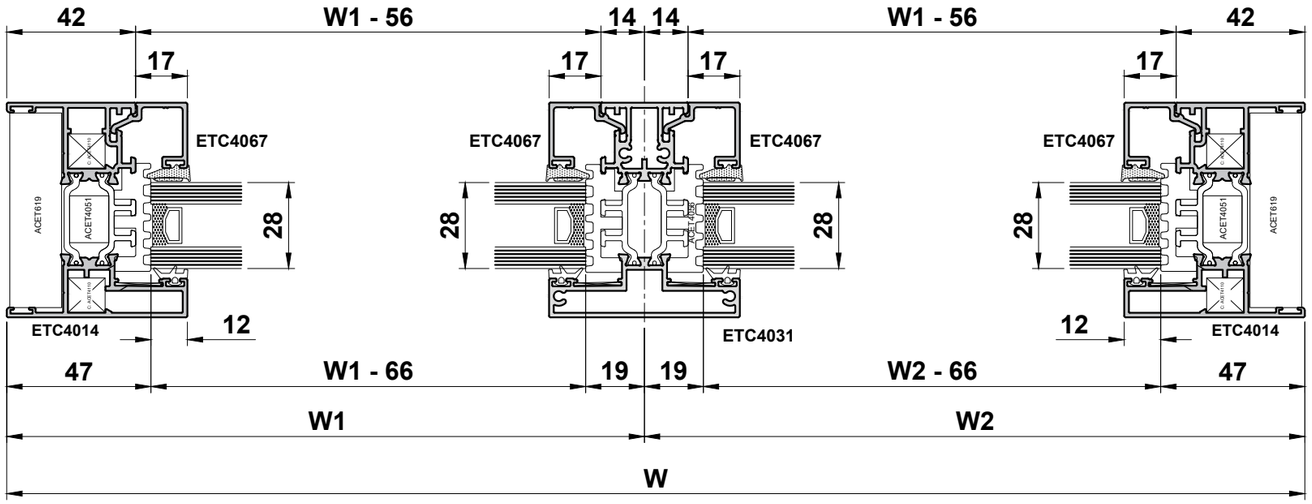

Do Not Scale From This Drawing

Cutting Information

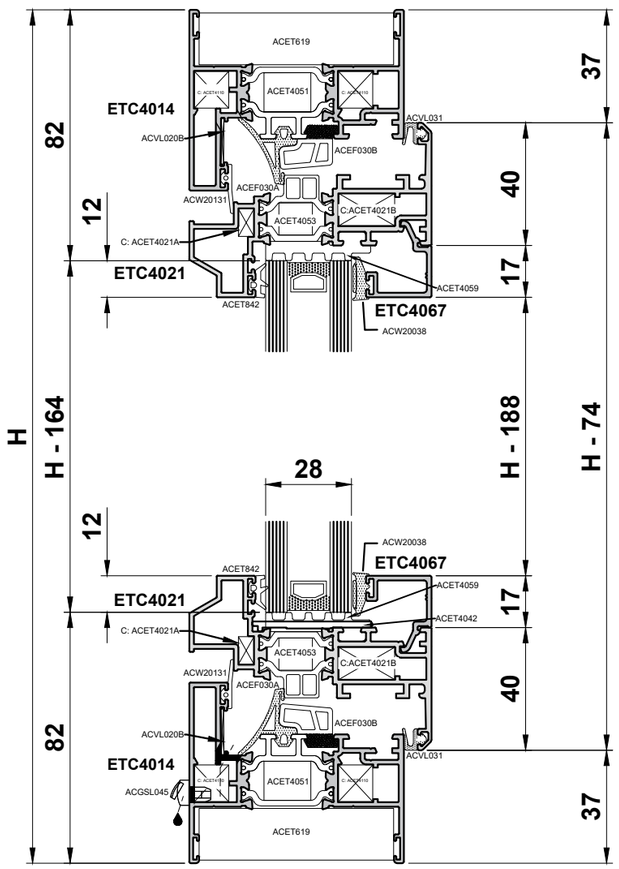

Sections

ETC4014		2		H
ETC4014		2		W
ETC4021		2		H - 74
ETC4021		2		W - 74
Bead		2		W - 154
Bead		2		H - 188

Glass
W - 164
H - 164

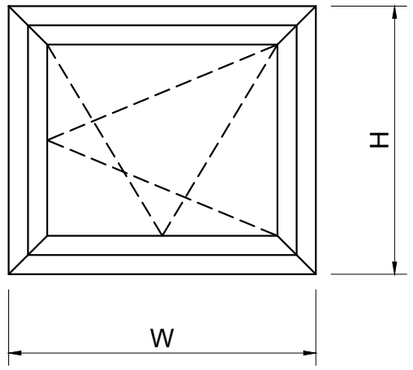

Accessories

ACET311	4	Chevron (sash)
ACVL020B	4	Chevron (frame)
ACET4110	8	Frame Cleat
ACET4021A	4	Sash Cleat (outer)
ACET4021B	4	Sash Cleat (inner)
ACW20131	2(W+H)	External Flat Gasket (frame)
ACEF030A	2(W+H)	Centre Gasket (frame)
ACEF030B	2(W+H)	Centre Gasket (frame)
ACEF031B	4	Centre Gasket Corner (frame)
ACVL031	2(W+H)	Flipper Gasket (sash)
ACET4042	6	Bridge Packer
ACET842	2(W+H)	Gasket E
ACW20038	2(W+H)	Wedge Gasket
ACGSL045	2	Drainage Cap

Please refer to the SB Chrono or Fapim manual for tilt & turn hardware

Foam

ACET619	2(W+H)	Foam (frame)
ACET4051	2(W+H)	Foam (frame)
ACET4053	2(W+H)	Foam (sash)
ACET4059	2(W+H)	Foam (sash)

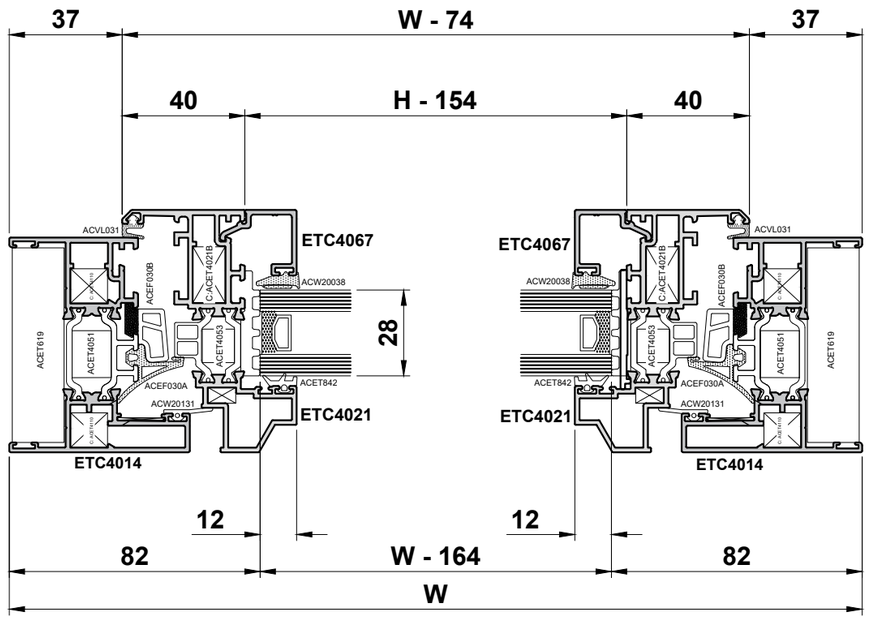

Do Not Scale From This Drawing

Cutting Information

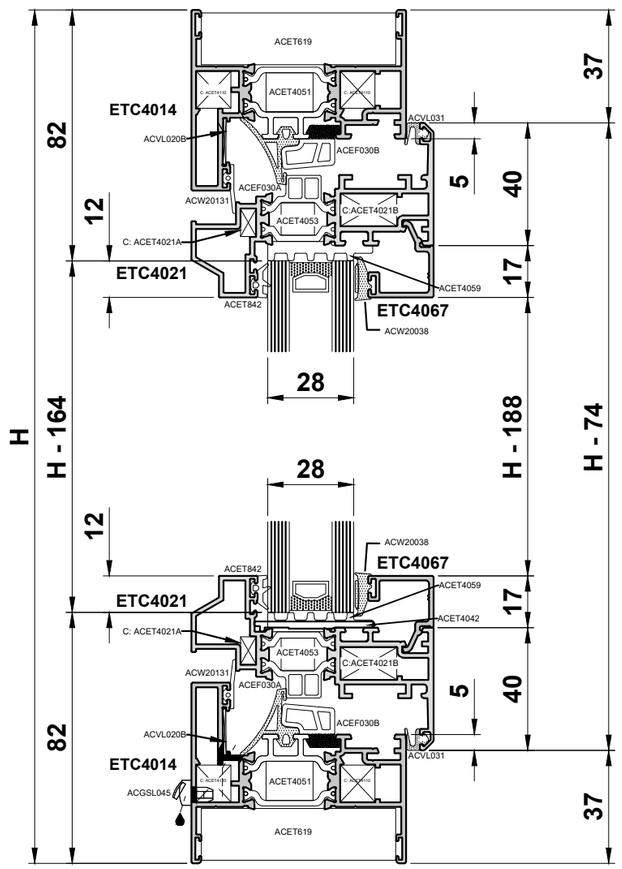

Sections

ETC4014		2		H
ETC4014		2		W
ETC4021		2		H - 74
ETC4021		2		W1 - 46
ETC4031		1		H - 84
Bead		2		W1 - 126
Bead		2		H - 188
Bead		2		W2 - 56
Bead		2		H - 118

Foam

ACET619	2(W+H)	Foam (frame)
ACET4051	2(W+H)	Foam (frame)
ACET4056	(2 x W2) + (2 x H)	Foam (frame)
ACET4053	(2 x W1) + (2 x H)	Foam (sash)
ACET4059	(2 x W1) + (2 x H)	Foam (sash)

Accessories

ACET311	4	Chevron (sash)
ACVL020B	4	Chevron (frame)
ACET4110	8	Frame Cleat
ACET4021A	4	Sash Cleat (outer)
ACET4021B	4	Sash Cleat (inner)
ACVL029	4	Anti-Twist Clip (mullion)
ACET066	4	Mullion Screws
ACW20131	2(W1+H)	External Flat Gasket (frame A)
ACEF030A	2(W1+H)	Centre Gasket (frame A)
ACEF030B	2(W1+H)	Centre Gasket (frame A)
ACEF031B	4	Centre Gasket Corner (frame A)
ACVL031	2(W1+H)	Flipper Gasket (sash)
ACET4041	2	Bridge Packer (frame B)
ACET4042	6	Bridge Packer (sash)
ACET842	(2W)+(4H)	Gasket E
ACW20038	(2W)+(4H)	Wedge Gasket
ACGSL045	4	Drainage Cap

Please refer to the SB Chrono or Fapim manual for tilt & turn hardware

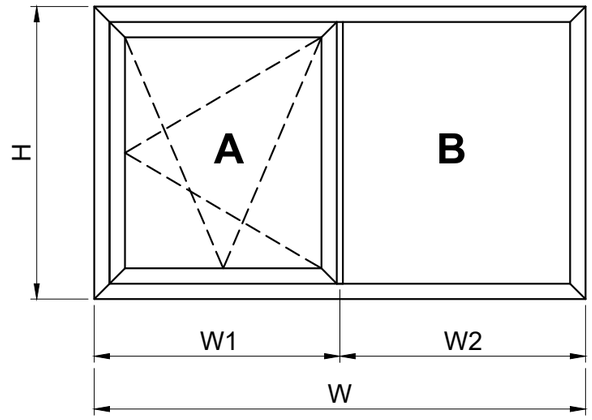

	Glass
A	W1 - 136 x H - 164
B	W2 - 66 x H - 94

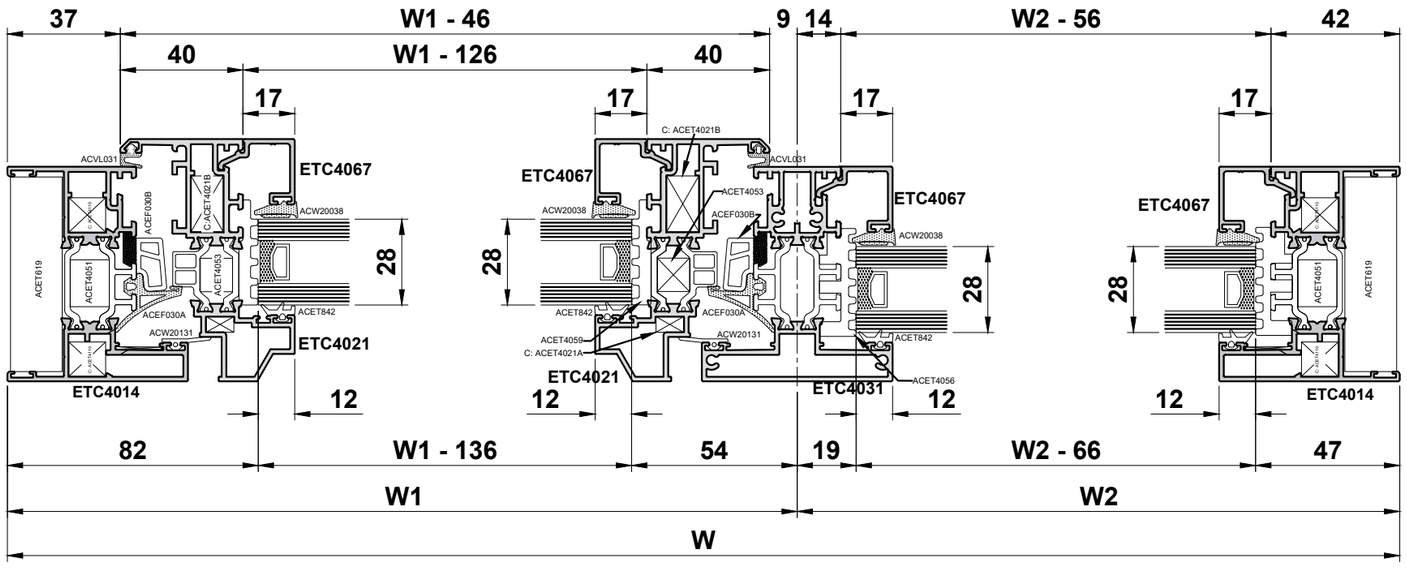

Do Not Scale From This Drawing

ISSUED : June 2025

Cutting Information

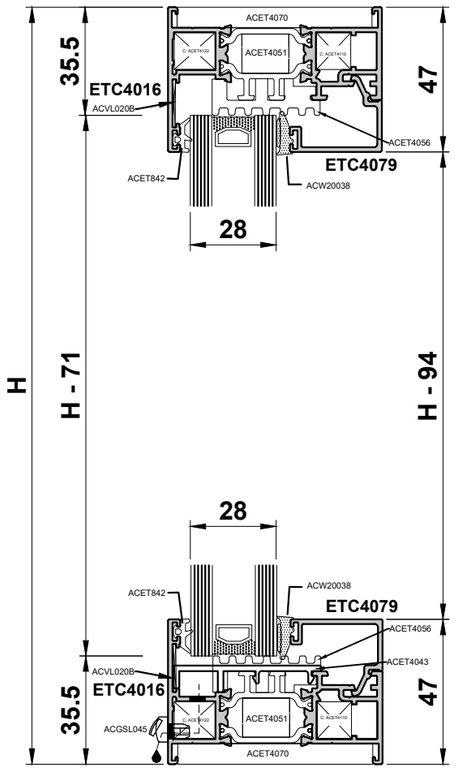

Sections

ETC4016		2		H
ETC4016		2		W
Bead		2		W - 61
Bead		2		H - 94

Glass
W - 71
H - 71

Accessories

ACVL020B	4	Chevron
ACET4110	4	Cleat Outerframe
ACET4122	4	Cleat Outerframe
ACET842	2(W+H)	E Gasket
ACW20038	2(W+H)	Wedge Gasket
ACGSL045	2	Drainage Cap
ACET4043	2	Bridge Packer

Foam

ACET4070	2(W+H)	Foam
ACET4051	2(W+H)	Foam
ACET4056	2(W+H)	Foam

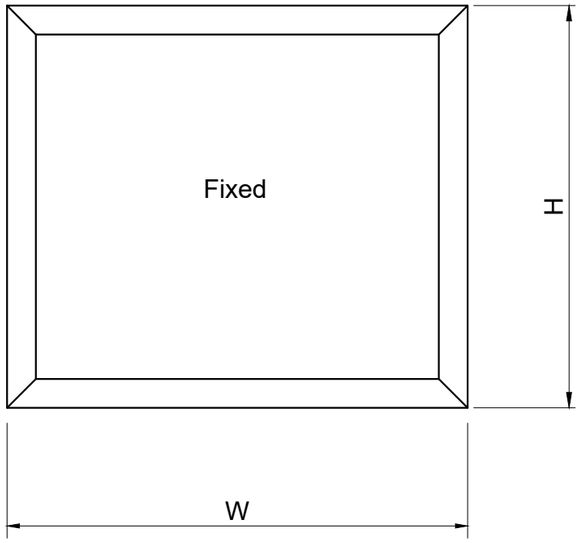

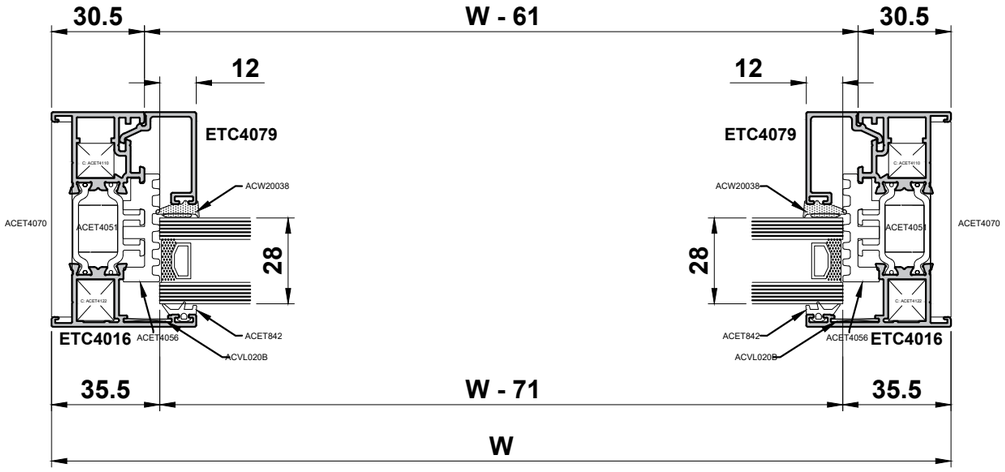

Do Not Scale From This Drawing

Cutting Information

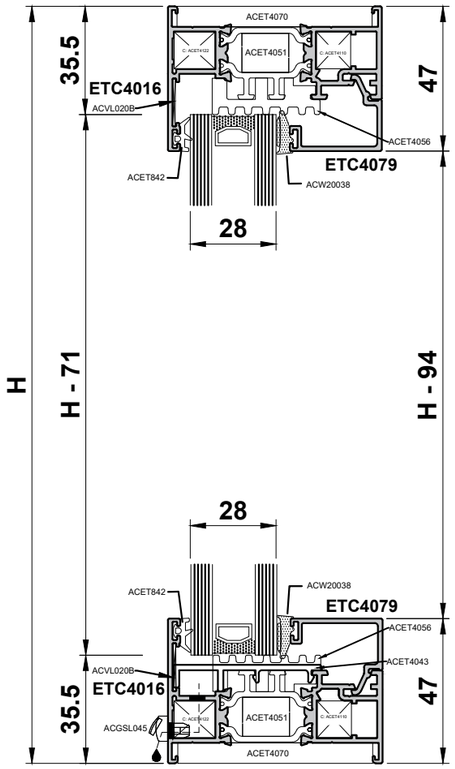

Sections

ETC4016		2		H
ETC4016		2		W
ETC4036		1		H - 61
Bead		2		W1 - 44.5
Bead		2		W2 - 44.5
Bead		4		H - 94

	Glass
A	W1 - 54.5 x H-71
B	W2 - 54.5 x H-71

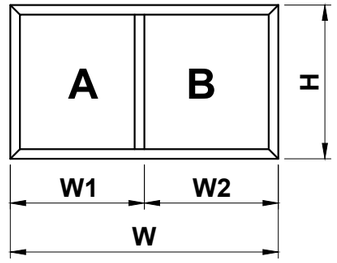

Accessories

ACVL020B	4	Chevron
ACET4110	4	Cleat Outerframe
ACET4122	4	Cleat Outerframe
ACVL029	4	Anti-Twist Clip
ACET066	4	Mullion Screws
ACET842	(2W)+(4H)	E Gasket
ACW20038	(2W)+(4H)	Wedge Gasket
ACGSL045	2	Drainage Cap
ACET4043	4	Bridge Packer

Foam

ACET4070	2(W+H)	Foam
ACET4051	2(W+H)	Foam
ACET4056	(2 x W) + (4 x H)	Foam

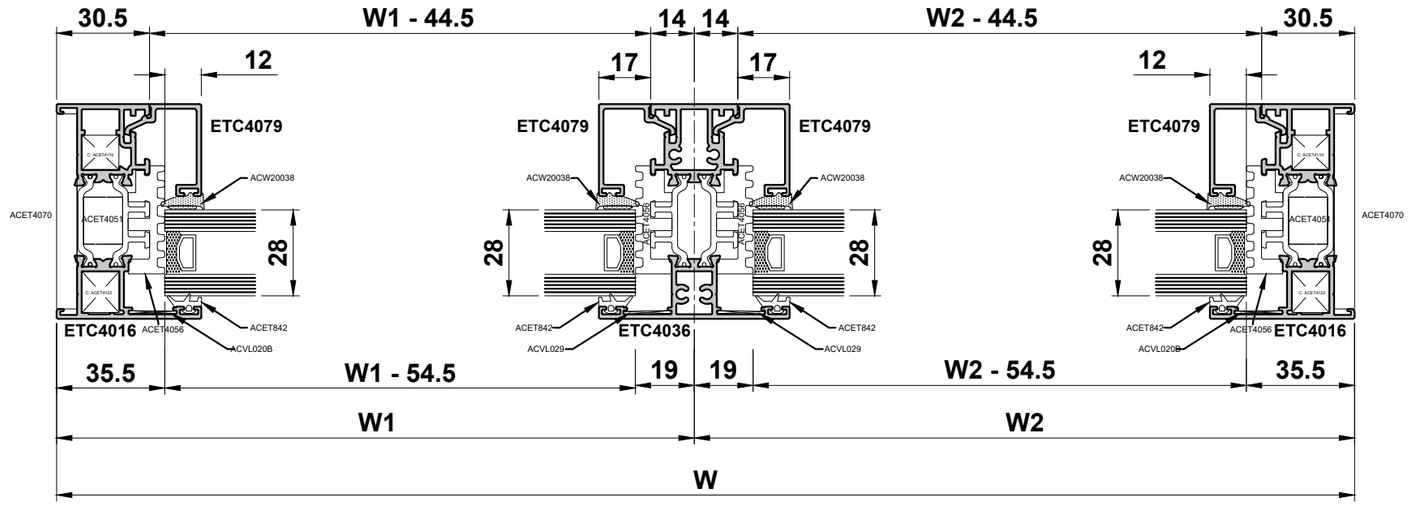

Do Not Scale From This Drawing

Cutting Information

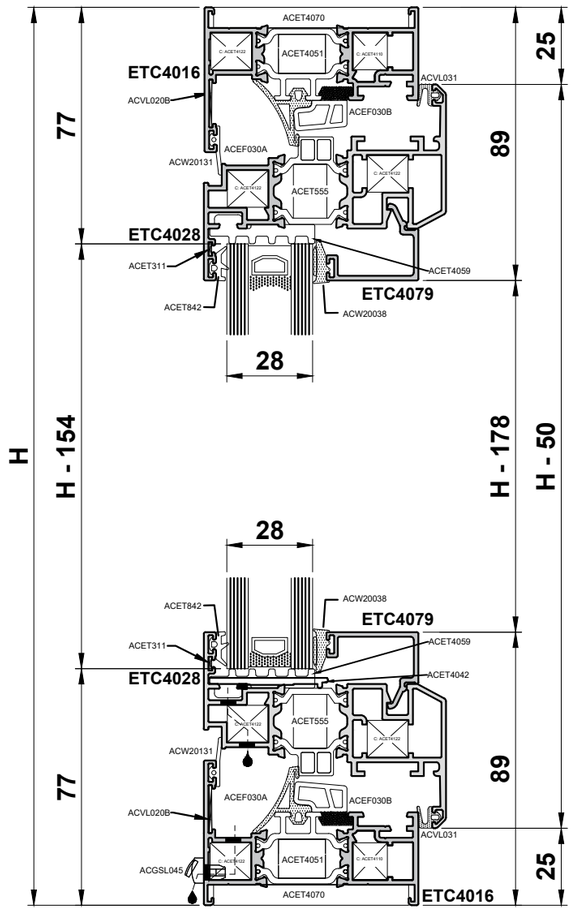

Sections

ETC4016		2		H
ETC4016		2		W
ETC4028		2		H - 50
ETC4028		2		W - 50
Bead		2		W - 144
Bead		2		H - 178

Glass
W - 154
H - 154

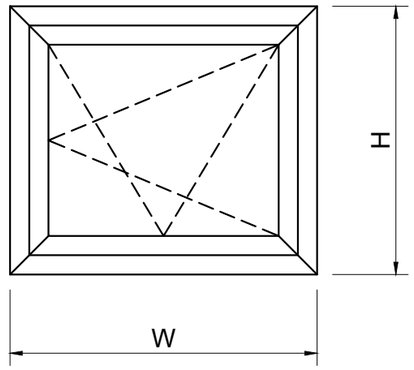

Accessories

ACET311	4	Chevron (sash)
ACVL020B	4	Chevron (frame)
ACET4110	4	Frame Cleat (Inner)
ACET4122	4	Frame Cleat (Outer)
ACET4122	8	Sash Cleat
ACW20131	2(W+H)	External Flat Gasket (frame)
ACEF030A	2(W+H)	Centre Gasket (frame)
ACEF030B	2(W+H)	Centre Gasket (frame)
ACEF031B	4	Centre Gasket Corner (frame)
ACVL031	2(W+H)	Flipper Gasket (sash)
ACET4042	6	Bridge Packer
ACET842	2(W+H)	Gasket E
ACW20038	2(W+H)	Wedge Gasket
ACGSL045	2	Drainage Cap

Please refer to the SB Chrono or Fapim manual for tilt & turn hardware

Foam

ACET4070	2(W+H)	Foam (frame)
ACET4051	2(W+H)	Foam (frame)
ACET555	2(W+H)	Foam (sash)
ACET4059	2(W+H)	Foam (sash)

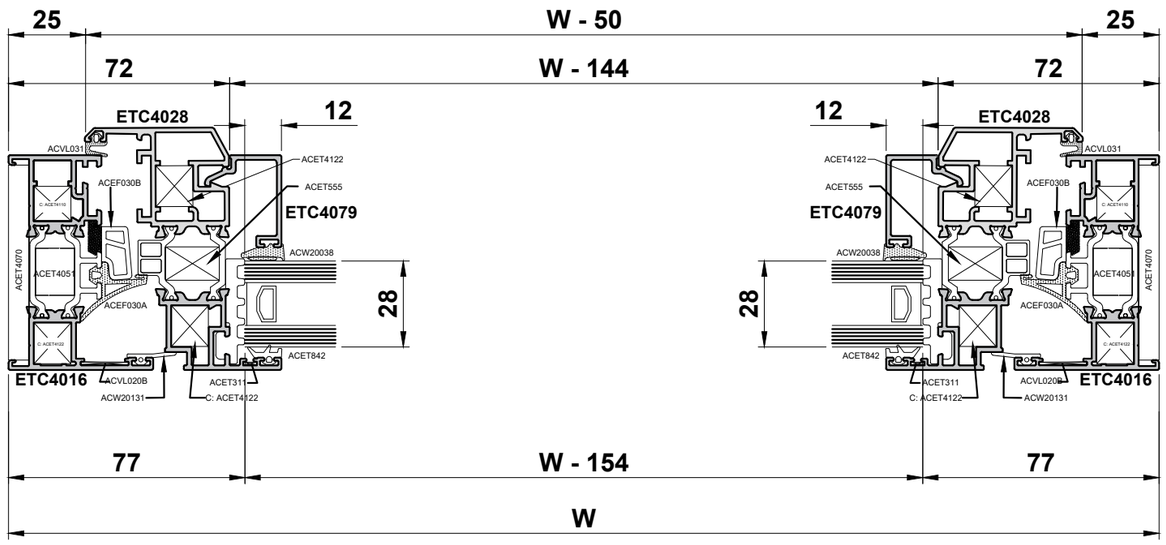

Do Not Scale From This Drawing

Cutting Information

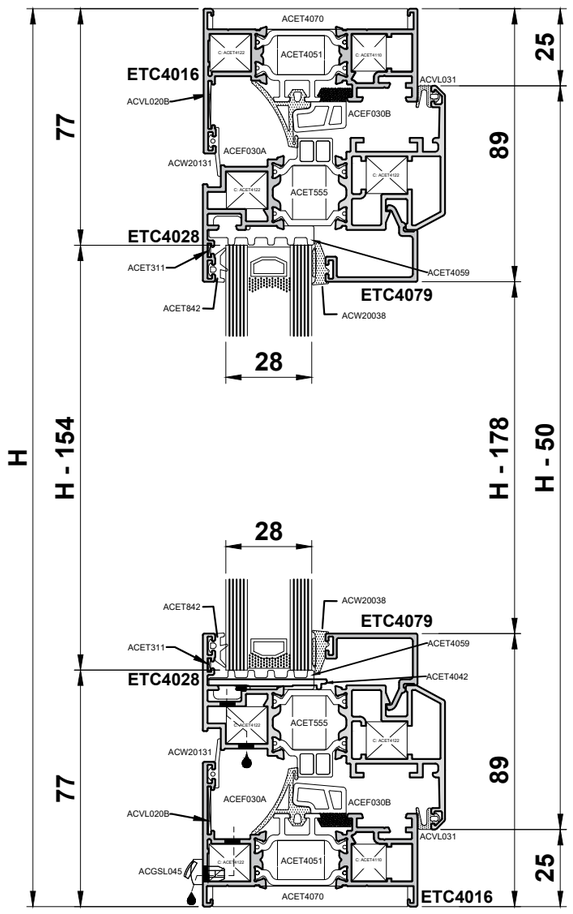

Sections

ETC4016		2		H
ETC4016		2		W
ETC4028		2		H - 50
ETC4028		2		W1 - 34
ETC4036		1		H - 61
Bead		2		W1 - 128
Bead		2		H - 178
Bead		2		W2 - 44.5
Bead		2		H - 94

Foam

ACET4070	2(W+H)	Foam (frame)
ACET4051	2(W+H)	Foam (frame)
ACET4056	(2 x W2) + (2 x H)	Foam (frame)
ACET555	(2 x W1) + (2 x H)	Foam (sash)
ACET4059	(2 x W1) + (2 x H)	Foam (sash)

Accessories

ACET311	4	Chevron (sash)
ACVL020B	4	Chevron (frame)
ACET4110	4	Frame Cleat (Inner)
ACET4122	4	Frame Cleat (Outer)
ACET4122	8	Sash Cleat
ACVL029	4	Anti-Twist Clip (mullion)
ACET066	4	Mullion Screws
ACW20131	2(W1+H)	External Flat Gasket (frame A)
ACEF030A	2(W1+H)	Centre Gasket (frame A)
ACEF030B	2(W1+H)	Centre Gasket (frame A)
ACEF031B	4	Centre Gasket Corner (frame A)
ACVL031	2(W1+H)	Flipper Gasket (sash)
ACET4042	6	Bridge Packer (sash)
ACET4043	2	Bridge Packer (frame B)
ACET842	(2W)+(4H)	Gasket E
ACW20038	(2W)+(4H)	Wedge Gasket
ACGSL045	4	Drainage Cap

Please refer to the SB Chrono or Fapim manual for tilt & turn hardware

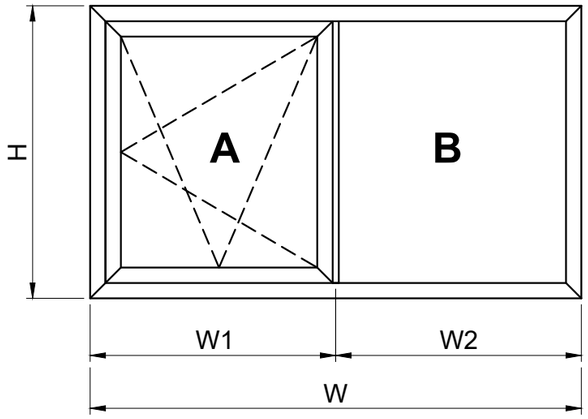

	Glass
A	W1 - 138 x H - 154
B	W2 - 54.5 x H - 94

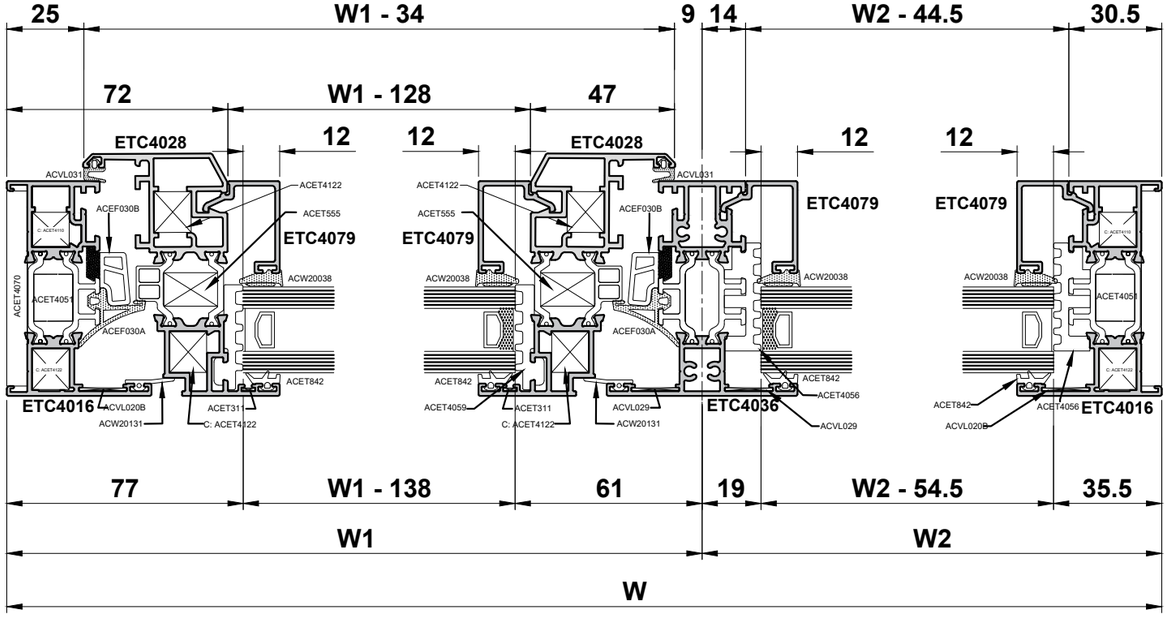

Do Not Scale From This Drawing

Cutting Information

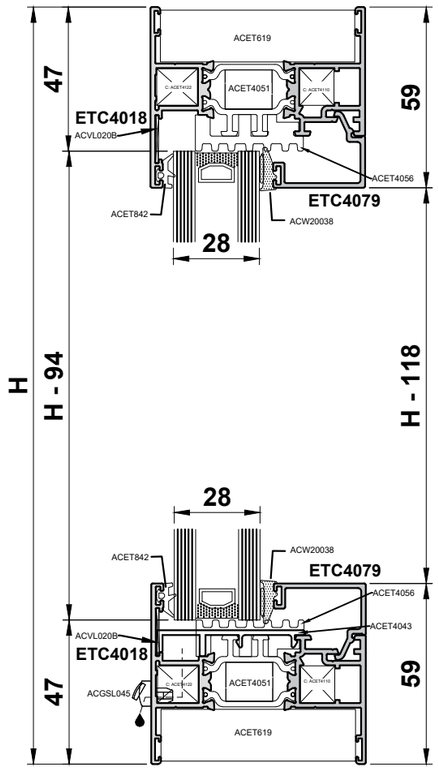

Sections

ETC4018		2		H
ETC4018		2		W
Bead		2		W - 84
Bead		2		H - 118

Glass
W - 94
H - 94

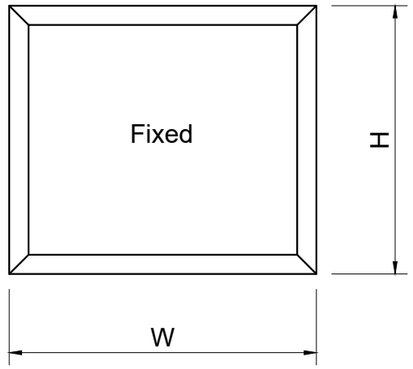

Accessories

ACVL020B	4	Chevron
ACET4110	4	Cleat Outerframe
ACET4122	4	Cleat Outerframe
ACET842	2(W+H)	E Gasket
ACW20038	2(W+H)	Wedge Gasket
ACGSL045	2	Drainage Cap
ACET4043	2	Bridge Packer

Foam

ACET619	2(W+H)	Foam
ACET4051	2(W+H)	Foam
ACET4056	2(W+H)	Foam

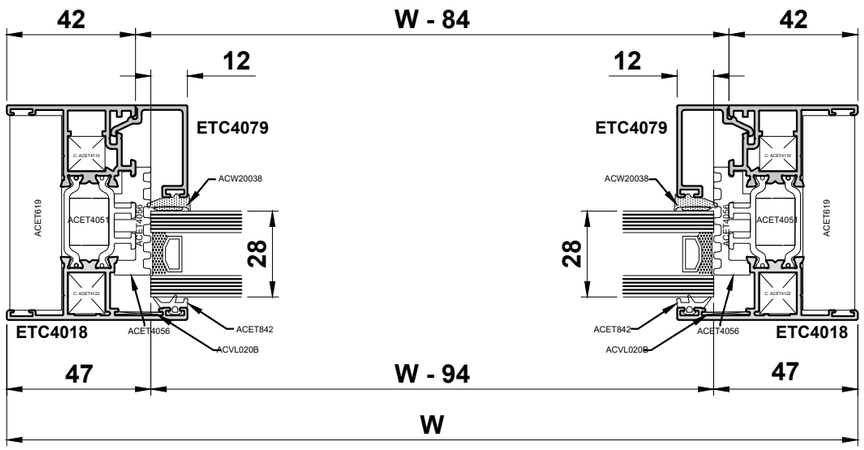

Cutting Information

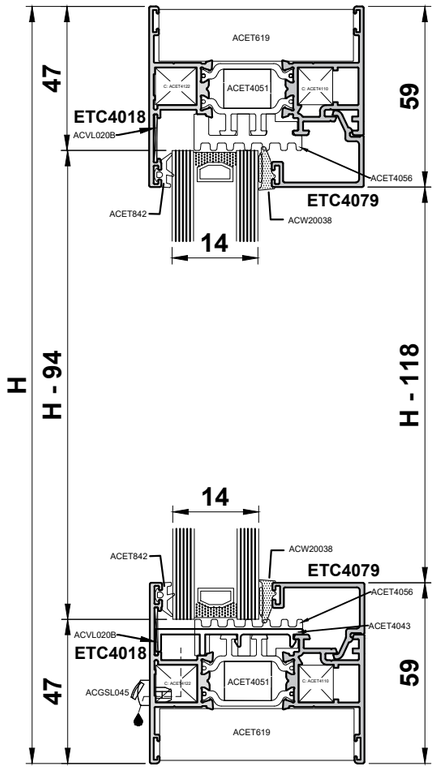

Sections

ETC4018		2		H
ETC4018		2		W
ETC4036		1		H - 84
Bead		2		W1 - 56
Bead		2		W2 - 56
Bead		4		H - 118

	Glass
A	W1 - 56 x H - 94
B	W2 - 56 x H - 94

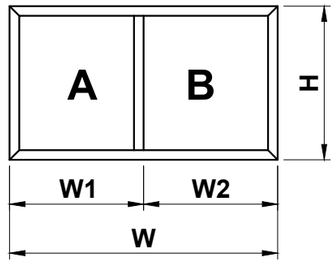

Accessories

ACVL020B	4	Chevron
ACET4110	4	Cleat Outerframe
ACET4122	4	Cleat Outerframe
ACVL029	4	Anti-Twist Clip
ACET066	4	Mullion Screws
ACET842	(2W)+(4H)	E Gasket
ACW20038	(2W)+(4H)	Wedge Gasket
ACGSL045	2	Drainage Cap
ACET4043	4	Bridge Packer

Foam

ACET619	2(W+H)	Foam
ACET4051	2(W+H)	Foam
ACET4056	(2 x W) + (4 x H)	Foam

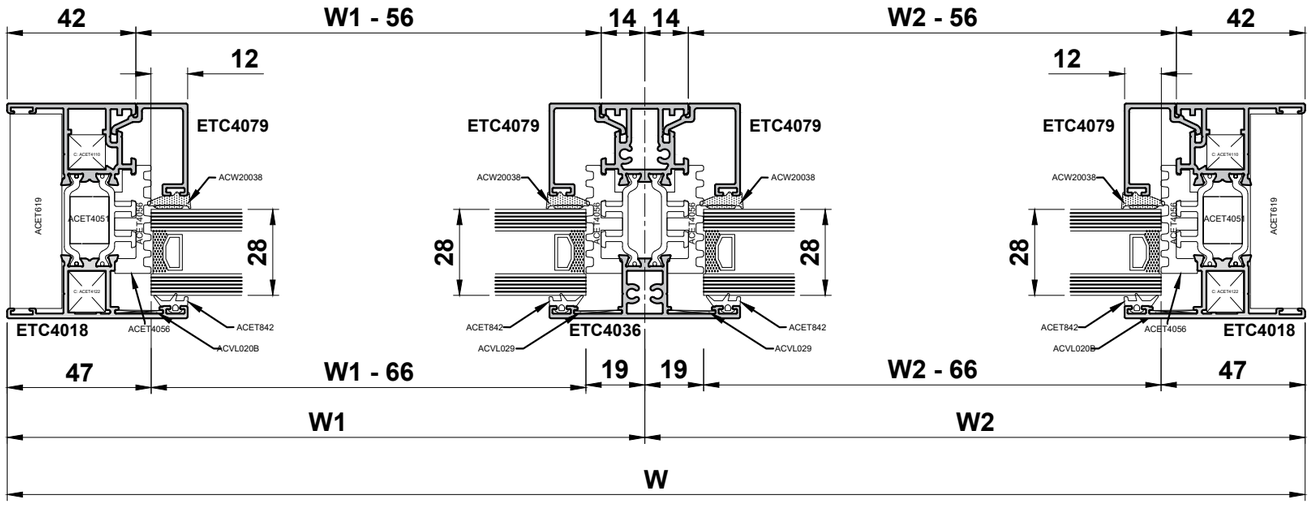

Do Not Scale From This Drawing

Cutting Information

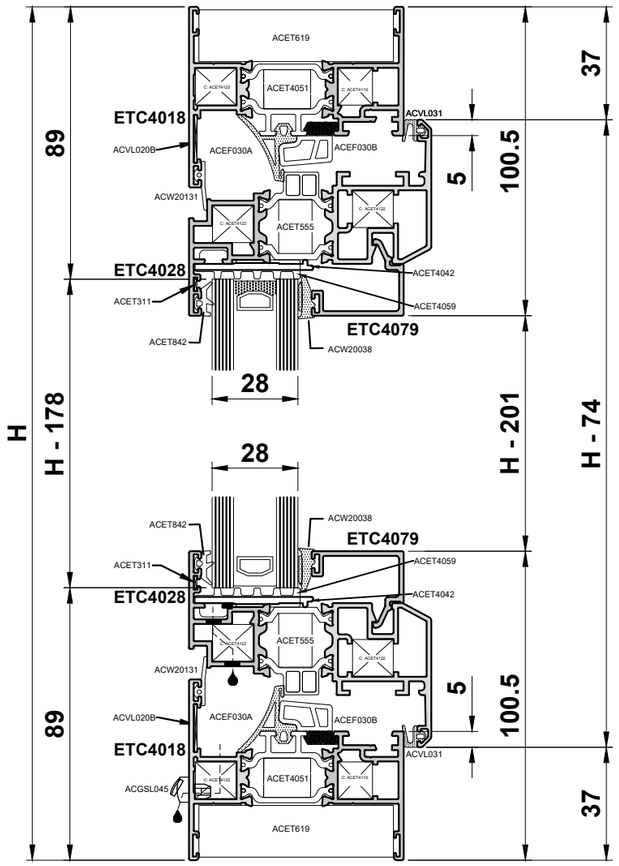

Sections

ETC4018		2		H
ETC4018		2		W
ETC4028		2		H - 74
ETC4028		2		W - 74
Bead		2		W - 168
Bead		2		H - 201

Glass
W - 178
H - 178

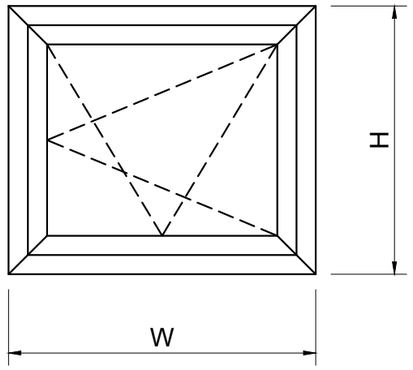

Accessories

ACET311	4	Chevron (sash)
ACVL020B	4	Chevron (frame)
ACET4110	4	Frame Cleat (Inner)
ACET4122	4	Frame Cleat (Outer)
ACET4122	8	Sash Cleat
ACW20131	2(W+H)	External Flat Gasket (frame)
ACEF030A	2(W+H)	Centre Gasket (frame)
ACEF030B	2(W+H)	Centre Gasket (frame)
ACEF031B	4	Centre Gasket Corner (frame)
ACVL031	2(W+H)	Flipper Gasket (sash)
ACET4042	6	Bridge Packer
ACET842	2(W+H)	Gasket E
ACW20038	2(W+H)	Wedge Gasket
ACGSL045	2	Drainage Cap

Please refer to the SB Chrono or Fapim manual for tilt & turn hardware

Foam

ACET619	2(W+H)	Foam (frame)
ACET4051	2(W+H)	Foam (frame)
ACET555	2(W+H)	Foam (sash)
ACET4059	2(W+H)	Foam (sash)

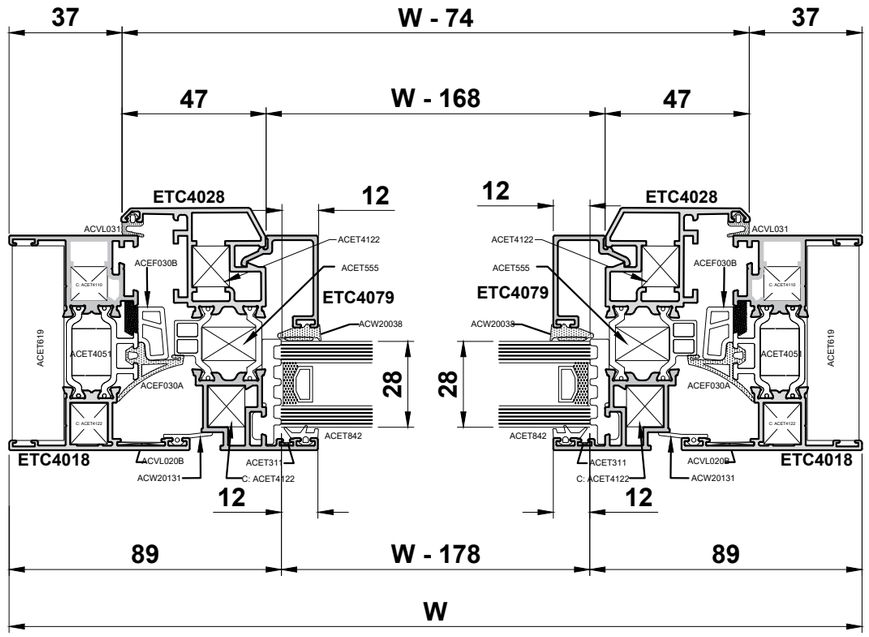

Do Not Scale From This Drawing

Cutting Information

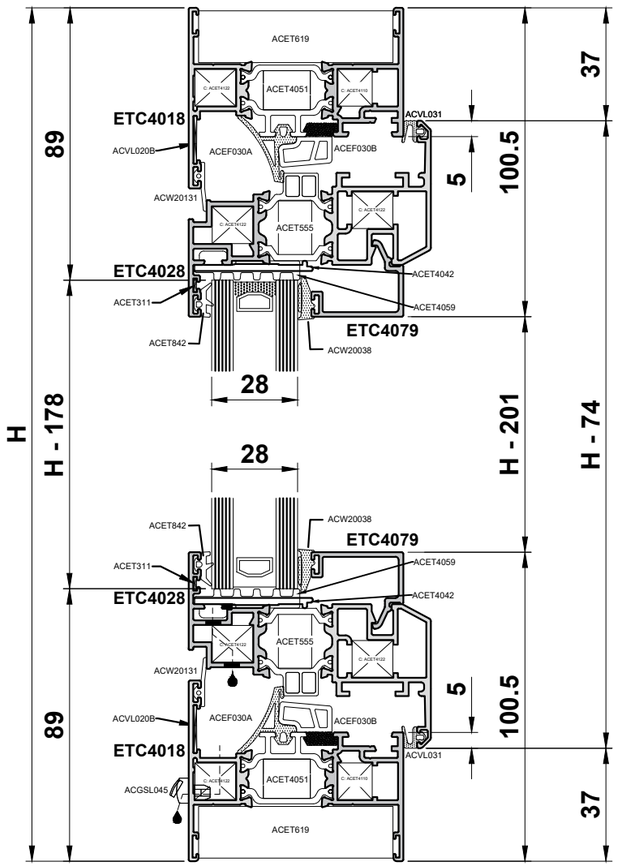

Sections

ETC4018		2		H
ETC4018		2		W
ETC4028		2		H - 74
ETC4028		2		W1 - 46
ETC4036		1		H - 84
Bead		2		W1 - 140
Bead		2		H - 201
Bead		2		W2 - 56
Bead		2		H - 118

Foam

ACET619	2(W+H)	Foam (frame)
ACET4051	2(W+H)	Foam (frame)
ACET4056	(2 x W2) + (2 x H)	Foam (frame)
ACET555	(2 x W1) + (2 x H)	Foam (sash)
ACET4059	(2 x W1) + (2 x H)	Foam (sash)

Accessories

ACET311	4	Chevron (sash)
ACVL020B	4	Chevron (frame)
ACET4110	4	Frame Cleat (Inner)
ACET4122	4	Frame Cleat (Outer)
ACET4122	8	Sash Cleat
ACVL029	4	Anti-Twist Clip (mullion)
ACET066	4	Mullion Screws
ACW20131	2(W1+H)	External Flat Gasket (frame A)
ACEF030A	2(W1+H)	Centre Gasket (frame A)
ACEF030B	2(W1+H)	Centre Gasket (frame A)
ACEF031B	4	Centre Gasket Corner (frame A)
ACVL031	2(W1+H)	Flipper Gasket (sash)
ACET4042	6	Bridge Packer (sash)
ACET4043	2	Bridge Packer (frame B)
ACET842	(2W)+(4H)	Gasket E
ACW20038	(2W)+(4H)	Wedge Gasket
ACGSL045	4	Drainage Cap

Please refer to the SB Chrono or Fapim manual for tilt & turn hardware

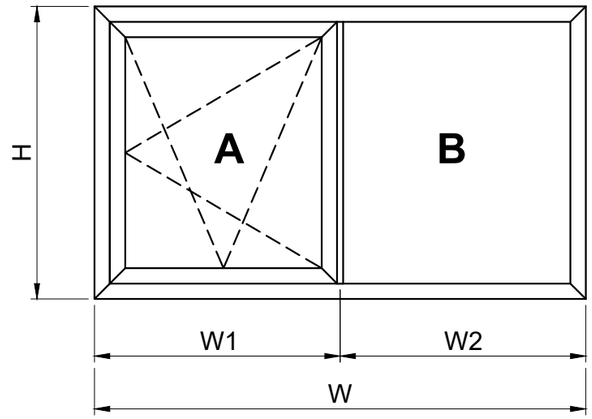

	Glass
A	W1 - 150 x H - 178
B	W2 - 66 x H - 94

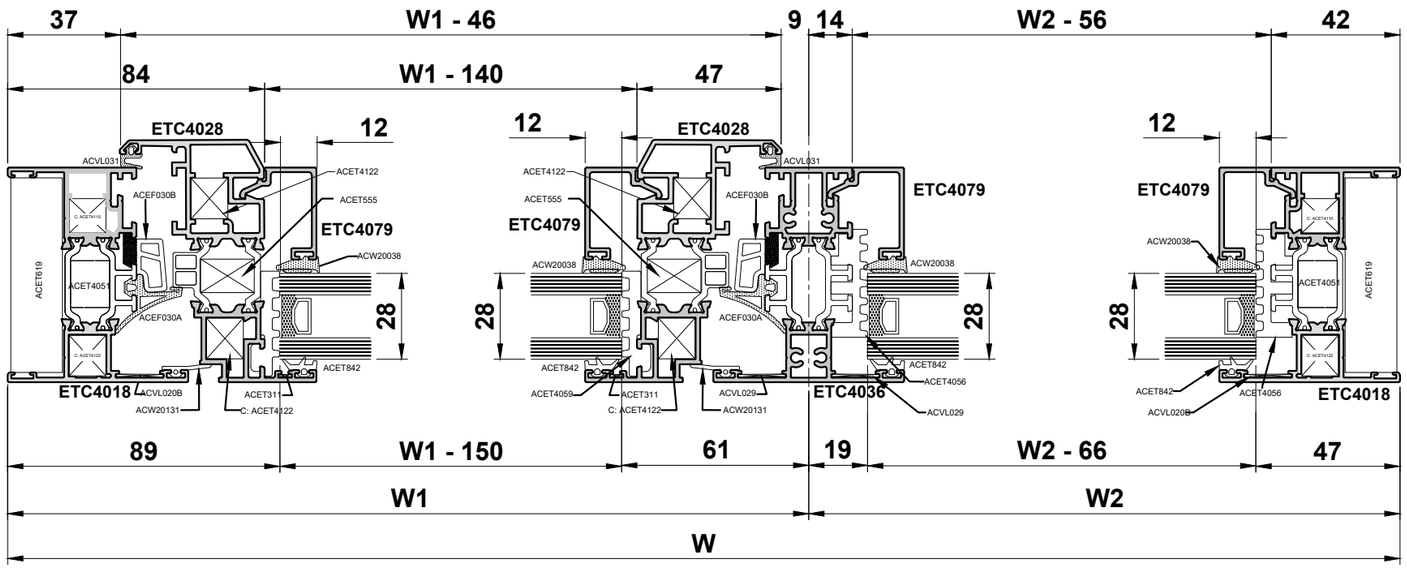

Do Not Scale From This Drawing