Main Index

Updates

DATE	PAGE	DESCRIPTION
Nov. 2023	All	ACET842 changed to ACET841 when using UN3160G ETC4124 slim sash added ACET963 details added Bay pole, frame extension & coupler details updated/expanded ACET4050 hinge added
Jun. 2024	All	ETC4125 slim heritage sash & ETC4137 heritage transom/mullion added 'G' Profile options added to various sections with additional tooling UN3570 Trickle vent added
Aug. 2024	All	ETC4110, ETC4112 & ETC4120 Cleat chambers revised to accept ACET820 cleat.
Oct. 2024	All	Section B & E Crimping tools for 'G' profiles updated & glazing pages in Section E updated.
Jun. 2025	All	ETC4101, 4105, 4132, 4133, 4137, PCX55, UN3080, 3081, 3082, 3083 & 3270 sections added. ACET963 updated to ACET963R. ACET4950 punch tool added.
Jan. 2026	All	ETC4123, ETC4330, 4410, 4430, 4446, UN3577 sections added with relevant accessories.

Specification

GENERAL DESCRIPTION

The "Alitherm 400" window system described in this manual is suitable for both replacement windows for existing buildings and for installation into new buildings.

The system incorporates internally & externally beaded vent frames suitable for espag locking.

The low line gaskets and extended polyamide thermal breaks help to provide excellent U Values and Window Energy Rating capable of achieving an 'A' Rating when used in conjunction with the correct double glazed unit.

Alitherm 400 has the option of Quick-Glaze beads with integrated gasket, providing a fast and efficient glazing process. Non integrated gasket options are also available.

Profiles with a 'G' suffix are supplied with integrated gasket.

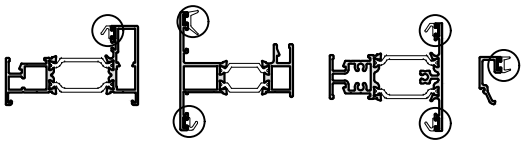

PROFILE SPECIFICATION

The window frames are constructed of aluminium alloy extrusion to BS EN 755-9 and BS EN 12020, extruded to 6063 T6 alloy. The internal and external extrusions are separated with a polyamide thermal break.

The external aluminium alloy extrusion is pre-treated and finished either:-

a) Anodised to BS 3987: 1987, grade AA25 to a natural self colour.

b) Polyester powder organic coating to BS 6496. Dual colour is available.

GENERAL MANUFACTURING

Outer and vent frames are made by cutting the frame profiles with accurate 45° mitred ends using Tungsten Carbide Tipped Saw Blades, operating at approximately 3000 rpm.

The corners are joined using the Alitherm 400 crimping tools to form a cold forged corner joint (made by deforming small slugs of metal into the groove of the corner cleat).

The ends of transoms and mullions are profiled to fit the frame and fixed using self-tapping screws with a silicone seal.

On polyester powder coated finishes, great care should be taken to avoid getting gap sealer on visible surfaces and should be removed as soon as possible with a clean cloth.

Care should be exercised when using products not supplied by Smart Systems Ltd as no responsibility can be accepted.

Specification

WINDOW DRAINAGE

As with all dry glazed systems, it is recommended that the window system is adequately drained and ventilated. Refer to drainage details in manual, if in doubt ask The Technical Department.

In order to get maximum performance and weather resistance it is recommended that drips are used over all vents.

OUTER FRAME MANUFACTURING INFORMATION

The outer frame members are cut with 45° mitred ends to the overall size required, measured to the longest point of the metal.

Prior to corner crimping the centre line position of any transoms or mullions should be marked on the outer frame members. Where the transom/mullion runs right through, it should be marked out on both jambs or head and cill members in pairs to ensure accurate alignment of the sections.

Using the marked centre line, Drill the transom/mullion fixing holes using a 5mm dia. drill bit.

Corners are formed by coating the cut faces to be joined with a suitable small gap sealer. Into the mitred corner insert the cleat glue and the required corner cleats and, where required, the aluminium corner chevrons. The two mitred ends are then brought together and crimped. The small gap sealer ensures a permanent joint and guards against the ingress of moisture and joint movement. After crimping the corner joint, special care should be taken to ensure any excess sealer is removed from painted surfaces.

Transoms or mullions are cut with square ends to the sizes calculated on the cutting formula sheets. The ends are then profiled to allow them to fit into the outer frame. Special tooling is available on request to profile the end of transom/mullion.

Prior to fixing of transoms and mullions smear the cut ends with a suitable gap sealer. After fixing, special care should be taken to ensure any excess is cleared from painted surfaces.

PROFILES WITH INTEGRATED GASKET

When cutting profiles with integrated gaskets, it is crucial to use sharp, well-maintained saw blades to ensure clean cuts.

For optimal mitre cuts, position the profiles so the gasket channels face the saw blades. However, we recommend testing different profile orientations on your saw to determine the best cutting method.

Transoms and mullions with integrated gaskets can be end milled as standard.

Specification

MULTI-POINT LOCKING

The vent should be prepped for the locking mechanism prior to fabrication and fitted into vent before hanging. Stainless steel fixings shall be used for securing the locking mechanism and keeps in position.

GLAZING

All beads are cut to suit the glazing aperture on the fully assembled window for glazing either at factory or on site as required.

EXTERNALLY BEADED GLAZING

Glazing beads are fitted to openings by cutting the horizontal beads square to head and cill of each vent and fixed light area. Vertical beads are cut squared at both ends. Insert bottom beads and two setting blocks to ensure glass will be centralized in vertical dimension of opening (glazing blocks must be full width of cavity to fully support glass or sealed unit), then insert top bead followed by side beads. Finish glazing by insertion of internal gaskets all round.

INTERNALLY BEADED GLAZING

Glazing beads are fitted to openings by cutting the horizontal beads square to head and cill of each vent and fixed light area. Vertical beads are cut square at both ends. Insert bottom beads and two setting blocks to ensure glass will be centralized in vertical dimension of opening (glazing blocks must be full width of cavity to fully support glass or sealed unit), then insert top bead followed by side beads. Finish glazing by insertion of internal gaskets all round.

When glazing with the Quick-Glaze bead, using a glass adjuster is strongly advised to adjust the glazing accordingly with ease.

Specification

Kitemark™ Certificate
No. KM 81580

Size Limitations and Performance Characteristics
Alitherm 400 Aluminium Alloy Window System

Window Type	Width (mm) - Maximum	Height (mm) - Maximum	Weight (kg) - Maximum	Area (M²) - Maximum	Friction Stays (up to and including)	Transom/Mullion Length (mm) inc frame - Maximum	Air Permeability classification	Water tightness classification	Resitance to Wind classification	Exposure category as given in Table 1 of BS 6375-1:2009
Sash dimensions for windows with approved sash profiles:										
Projecting top hung Internally beaded	1400	1400	40	-	24"	-	4	7A	AE2400	2000+
Projecting top hung Externally beaded	1400	1400	40	-	24"	-	4	5A	AE2400	2000+
Projecting side hung Internally beaded	600	1400	28	-	16"	-	4	7A	AE2400	2000+
Projecting side hung Externally beaded	600	1400	28	-	16"	-	4	5A	AE2400	2000+
Overall dimensions for windows with approved outer frame profiles:										
Fixed Internally Beaded	2100	2100	-	4.2	-	-	4	7A	AE2400	2000+
Fixed Externally Beaded	2100	2100	-	4.2	-	-	4	5A	AE2400	2000+
Overall dimensions for approved outer frames & transom/mullion profiles:										
Multilights* Internally Beaded	2100	2100	-	2.5	-	1200	4	7A	AE2400	2000+
Multilights* Externally Beaded	2100	2100	-	2.5	-	1200	4	5A	AE2400	2000+

*Transom/mullion subject to Ixx/Iyy requirements

Please see pages B25 & B26 for more guidance on vent sizes & limitations.

- Side Hung Weight Limit Can Be Increased To 40 kg Using Egress Hinges
- See hardware for minimum and maximum sizes

Number	Picture	Page	Perim. mm	Mec. mm	Ix(cm4) wx(cm3)	Iy(cm4) wy(cm3)	Length	Pack pr.	MF	SA	KL	HP	M
ETC4101 ETC4101G	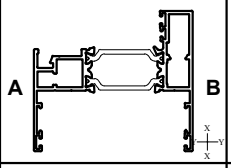	A17	426	122	31.86 --- 8.3	9.21 --- 3.3	6.5	1	✓	✓	✓	✓	✓
ETC4105 ETC4105G	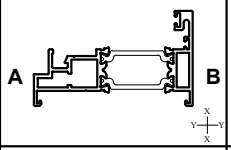	A19	333	82	23.88 --- 6.0	3.83 --- 2.16	6.5	1	✓	✓	✓	✓	✓
ETC4110 ETC4110G	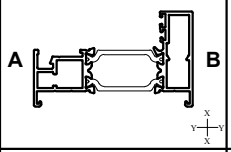	A15	295	82	23.98 --- 6.16	4.12 --- 2.23	6.5	1	✓	✓	✓	✓	✓
ETC4111 ETC4111G	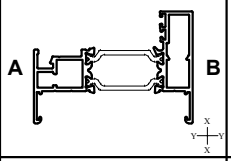	A15	346	97	26.73 --- 6.91	5.28 --- 2.14	6.5	1	✓	✓	✓	✓	✓
ETC4112 ETC4112G	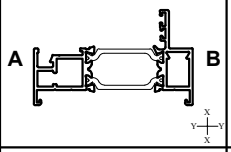	A16	297	78	21.54 --- 6.47	2.74 --- 1.64	6.5	1	✓	✓	✓	✓	✓
ETC4113	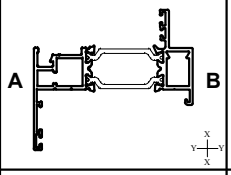	A16	371	101	27.56 --- 7.8	5.91 --- 2.18	6.5	1	✓	✓	✓	✓	✓
ETC4114	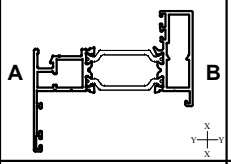	A17	369	101	30.35 --- 8.22	7.60 --- 2.93	6.5	1	✓	✓	✓	✓	✓
ETC4115 ETC4115G	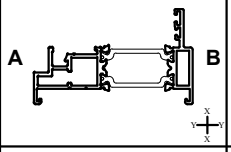	A18	297	78	21.50 --- 5.69	2.75 --- 1.68	6.5	1	✓	✓	✓	✓	✓
ETC4116 ETC4116G	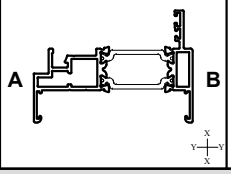	A18	351	96	26.38 --- 6.61	4.39 --- 1.93	6.5	1	✓	✓	✓	✓	✓

A = Outside
B = Inside

MF = Mill Finish
SA = Silver Anodised
KL = Basic Colour
HP = Special Colour
M = Dual Colour

Number	Picture	Page	Perim. mm	Mec. mm	Ix(cm4) wx(cm3)	Iy(cm4) wy(cm3)	Length	Pack pr.	MF	SA	KL	HP	M
ETC4117	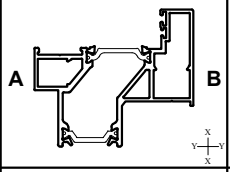	A20	391	76	26.4 --- 7.14	11.73 --- 3.90	6.5	1	✓	✓	✓	✓	✓
ETC4120 ETC4120G	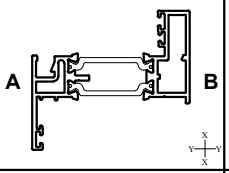	A20	297	87	18.24 --- 6.10	4.63 --- 1.95	6.5	1	✓	✓	✓	✓	✓
ETC4123 ETC4123G	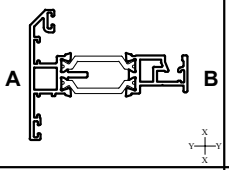	A23	359	67	14.47 --- 3.87	3.24 --- 1.37	6.5	1	✓	✓	✓	✓	✓
ETC4124 ETC4124G	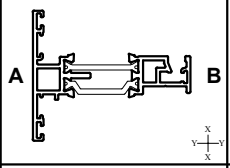	A21	346	72	14.37 --- 3.88	2.75 --- 1.13	6.5	1	✓	✓	✓	✓	✓
ETC4125 ETC4125G	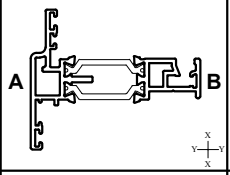	A22	344	79	13.93 --- 3.77	2.84 --- 1.18	6.5	1	✓	✓	✓	✓	✓
ETC4129 ETC4129G	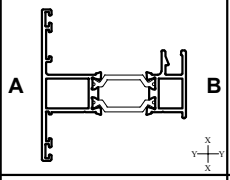	A23	335	99	19.34 --- 5.51	5.91 --- 1.95	6.5	1	✓	✓	✓	✓	✓
ETC4130 ETC4130G	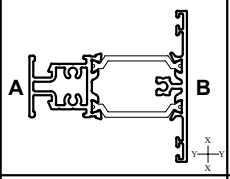	A24	312	89	19.39 --- 5.84	4.66 --- 1.63	6.5	1	✓	✓	✓	✓	✓
ETC4131	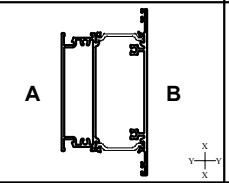	A43	427	213	93.65 --- 16.15	43.02 --- 16.42	6.5	1	✓	✓	✓	✓	✓
ETC4132	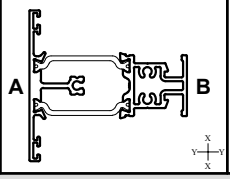	A21	381	89	19.8 --- 5.88	4.53 --- 1.59	6.5	1	✓	✓	✓	✓	✓

A = Outside
B = Inside

MF = Mill Finish
SA = Silver Anodised
KL = Basic Colour
HP = Special Colour
M = Dual Colour

Number	Picture	Page	Perim. mm	Mec. mm	Ix(cm4) wx(cm3)	Iy(cm4) wy(cm3)	Length	Pack pr.	MF	SA	KL	HP	M
ETC4133	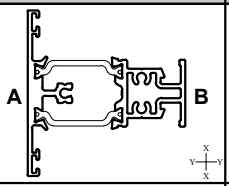	A22	371	89	16.27 --- 5.1	4.6 --- 1.61	6.5	1	✓	✓	✓	✓	✓
ETC4134 ETC4134G	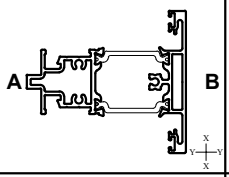	A19	453	117	29.83 --- 7.07	10.05 --- 3.25	6.5	1	✓	✓	✓	✓	✓
ETC4135 ETC4135G	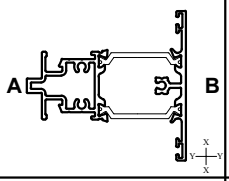	A26	337	111	23.74 --- 6.30	6.51 --- 2.11	6.5	1	✓	✓	✓	✓	✓
ETC4136	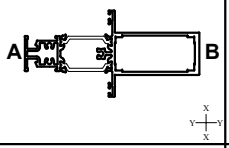	A25	421	201	95.03 --- 15.97	9.13 --- 3.21	6.5	1	✓	✓	✓	✓	✓
ETC4137 ETC4137G	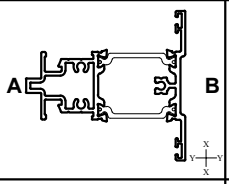	A26	410	113	23.74 --- 6.30	6.51 --- 2.11	6.5	1	✓	✓	✓	✓	✓
ETC4138	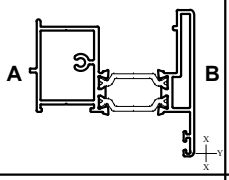	A27	306	83	20.06 --- 5.62	7.04 --- 2.88	6.5	1	✓	✓	✓	✓	✓
ETC4139	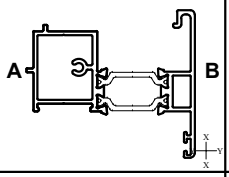	A27	340	84	19.48 --- 5.40	6.55 --- 2.54	6.5	1	✓	✓	✓	✓	✓
ETC4146	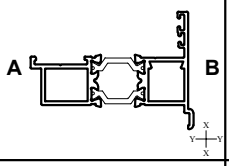	A28	248	74	12.60 --- 3.50	2.64 --- 1.35	6.5	1	✓	✓	✓	✓	✓
ETC4147	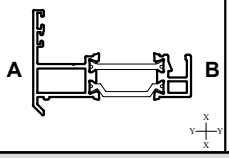	A28	256	65	13.69 --- 3.89	2.00 --- 1.22	6.5	1	✓	✓	✓	✓	✓

A = Outside
B = Inside

MF = Mill Finish
SA = Silver Anodised
KL = Basic Colour
HP = Special Colour
M = Dual Colour

Number	Picture	Page	Perim. mm	Mec. mm	Ix(cm4) wx(cm3)	Iy(cm4) wy(cm3)	Length	Pack pr.	MF	SA	KL	HP	M
ETC4179 ETC4179G	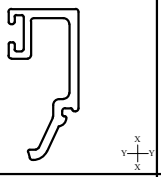	A30	104	29	- --- -	- --- -	6.5	1	✓	✓	✓	✓	
ETC4330	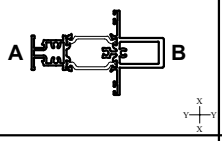	A24	436	148	48.04 --- 9.82	5.90 --- 2.07	6.5	1	✓	✓	✓	✓	✓
ETC4410	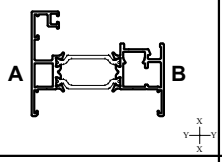	A44	419	109	30.43 --- 7.95	7.45 --- 2.79	6.5	1	✓	✓	✓	✓	✓
ETC4430	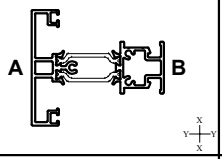	A44	484	120	32.84 --- 7.82	10.8 --- 3.53	6.5	1	✓	✓	✓	✓	✓
ETC4446	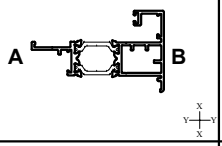	A44	359	67	16.49 --- 3.46	3.88 --- 1.77	6.5	1	✓	✓	✓	✓	✓
ETC080	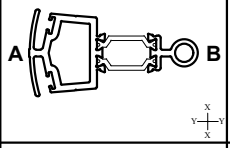	A36	334	61	25.58 --- 5.47	4.88 --- 2.57	6.5	1	✓	✓	✓	✓	✓
ETC081	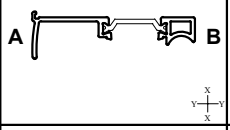	A36	197	35	13.85 --- 3.8	0.36 --- 0.52	6.5	1	✓	✓	✓	✓	✓
ETC082	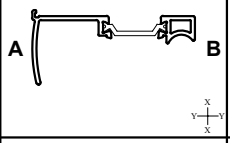	A36	221	47	16.21 --- 4.19	1.15 --- 1.29	6.5	1	✓	✓	✓	✓	✓
ETC083	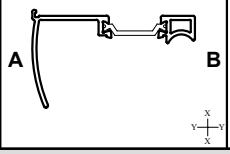	A36	243	58	17.66 --- 4.32	2.64 --- 2.36	6.5	1	✓	✓	✓	✓	✓

A = Outside
B = Inside

MF = Mill Finish
SA = Silver Anodised
KL = Basic Colour
HP = Special Colour
M = Dual Colour

Alitherm 400

PROFILES : TECHNICAL INFORMATION

Number	Picture	Page	Perim. mm	Mec. mm	Ix(cm4) wx(cm3)	Iy(cm4) wy(cm3)	Length	Pack pr.	MF	SA	KL	HP	M
ETC357	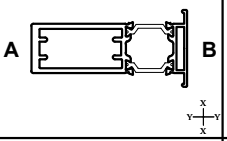	A37	297	138	41.5 --- 9.86	52 --- 2.67	6.5	1	✓	✓	✓	✓	✓
ETC451	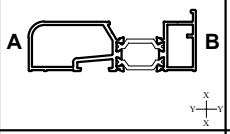	A38	304	109	32.44 --- 7.29	3.46 --- 2.79	6.5	1	✓	✓	✓	✓	✓
ETC452	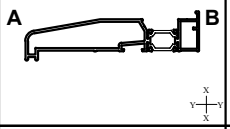	A38	414	197	122.46 --- 18.03	6.01 --- 3.34	6.5	1	✓	✓	✓	✓	✓
ETC457	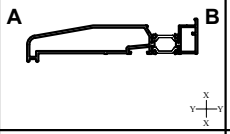	A38	444	212	164.27 --- 21.60	6.79 --- 3.73	6.5	1	✓	✓	✓	✓	✓
ETC458	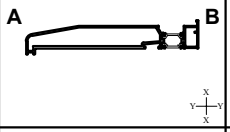	A39	524	252	313.62 --- 32.63	8.87 --- 4.79	6.5	1	✓	✓	✓	✓	✓
ETC477	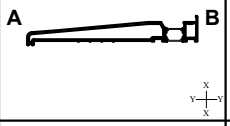	A40	752	408	1591.6 --- 105.33	26.84 --- 12.84	6.5	1	✓	✓	✓	✓	✓
ETC479N	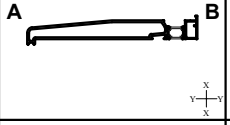	A39	594	287	501.64 --- 44.04	9.72 --- 5.34	6.5	1	✓	✓	✓	✓	✓
ETC869	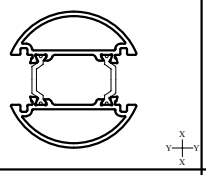	A32	332	144	18.38 --- 6.13	14.3 --- 5.17	6.5	1	✓	✓	✓	✓	✓
PCX55	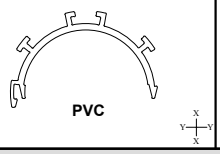	A33	207	-	- --- -	- --- -	3	1	✓				

A = Outside
B = Inside

MF = Mill Finish
SA = Silver Anodised
KL = Basic Colour
HP = Special Colour
M = Dual Colour

Alitherm 400

PROFILES : TECHNICAL INFORMATION

Number	Picture	Page	Perim. mm	Mec. mm	Ix(cm4) wx(cm3)	Iy(cm4) wy(cm3)	Length	Pack pr.	MF	SA	KL	HP	M
UN3000	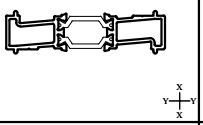	A37	251	41	15.8 --- 4.51	0.79 --- 0.84	6.5	1	✓	✓	✓	✓	✓
UN3010	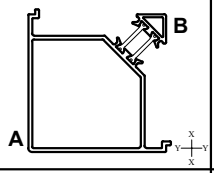	A35	369	226	41.4 --- 10.7	40.0 --- 11.6	6.5	1	✓	✓	✓	✓	✓
UN3011	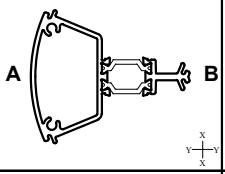	A35	288	130.3	22.3 --- 5	12.2 --- 4.1	6.5	1	✓	✓	✓	✓	✓
UN3012	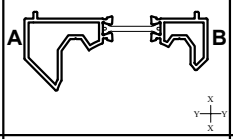	A32	238	76	17.24 --- 4.78	1.53 --- 1.46	6.5	1	✓	✓	✓	✓	✓
UN3015	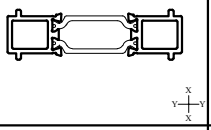	A37	214.5	56	18.1 --- 5.2	0.95 --- 0.95	6.5	1	✓	✓	✓	✓	✓
UN3020	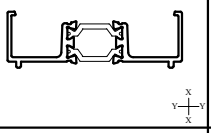	A41	281.6	70.4	14.8 --- 4.2	0.9 --- 1	6.5	1	✓	✓	✓	✓	✓
UN3080	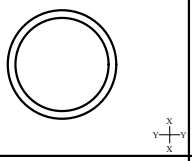	A33	-	-	4.69 --- 4.69	2.47 --- 2.47	6.5	1	✓				
UN3081	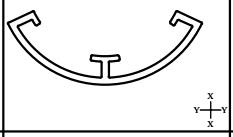	A33	189	68	- --- -	- --- -	6.5	1	✓	✓	✓	✓	
UN3082	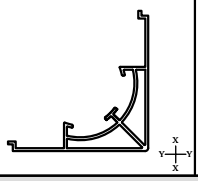	A34	379	151	- --- -	- --- -	6.5	1	✓	✓	✓	✓	

A = Outside
B = Inside

MF = Mill Finish
SA = Silver Anodised
KL = Basic Colour
HP = Special Colour
M = Dual Colour

ISSUED: JANUARY 2026

Number	Picture	Page	Perim. mm	Mec. mm	Ix(cm4) wx(cm3)	Iy(cm4) wy(cm3)	Length	Pack pr.	MF	SA	KL	HP	M
UN3083	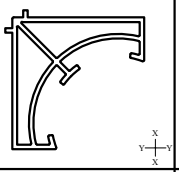	A34	235	12	- --- -	- --- -	6.5	1	✓	✓	✓	✓	
UN3160 UN3160G	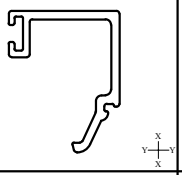	A29	120	39	- --- -	- --- -	6.5	1	✓	✓	✓	✓	
UN3162N UN3162NG	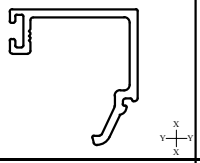	A29	128	41	- --- -	- --- -	6.5	1	✓	✓	✓	✓	
UN3164 UN3164G	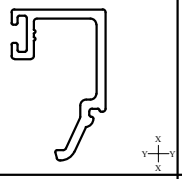	A30	112	33	- --- -	- --- -	6.5	1	✓	✓	✓	✓	
UN3166	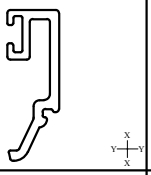	A31	98	43	- --- -	- --- -	6.5	1	✓	✓	✓	✓	
UN3168	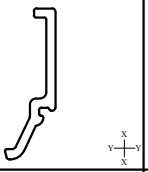	A31	65	23	- --- -	- --- -	6.5	1	✓	✓	✓	✓	
UN3270	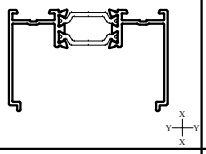	A41	407	85	23.39 --- 6.68	5.8 --- 1.83	6.5	1	✓	✓	✓	✓	✓
UN3370	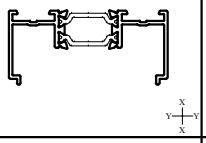	A41	360	61	18.4 --- 5.26	2.15 --- 1.97	6.5	1	✓	✓	✓	✓	✓
UN3570	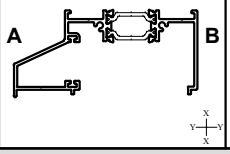	A42	545	140	47.47 --- 9.53	9.26 --- 4.87	6.5	1	✓	✓	✓	✓	✓

A = Outside
B = Inside

MF = Mill Finish
SA = Silver Anodised
KL = Basic Colour
HP = Special Colour
M = Dual Colour

Number	Picture	Page	Perim. mm	Mec. mm	Ix(cm4) wx(cm3)	Iy(cm4) wy(cm3)	Length	Pack pr.	MF	SA	KL	HP	M
UN3577	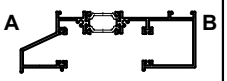	A42	751	178	117.89 --- 17.11	15.81 --- 8.83	6.5	1	✓	✓	✓	✓	✓
VL72	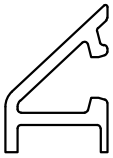	A32	251	41	16.30 --- 4.66	1.12 --- 1.55	6.5	1	✓	✓	✓	✓	

A = Outside
B = Inside

MF = Mill Finish
SA = Silver Anodised
KL = Basic Colour
HP = Special Colour
M = Dual Colour

Primary Visible Side — — — — — — — — — — — — — — — — Secondary Visible Side — · — · — · — · — · — · — · —

ETC4110 / G

Square Outer Frame

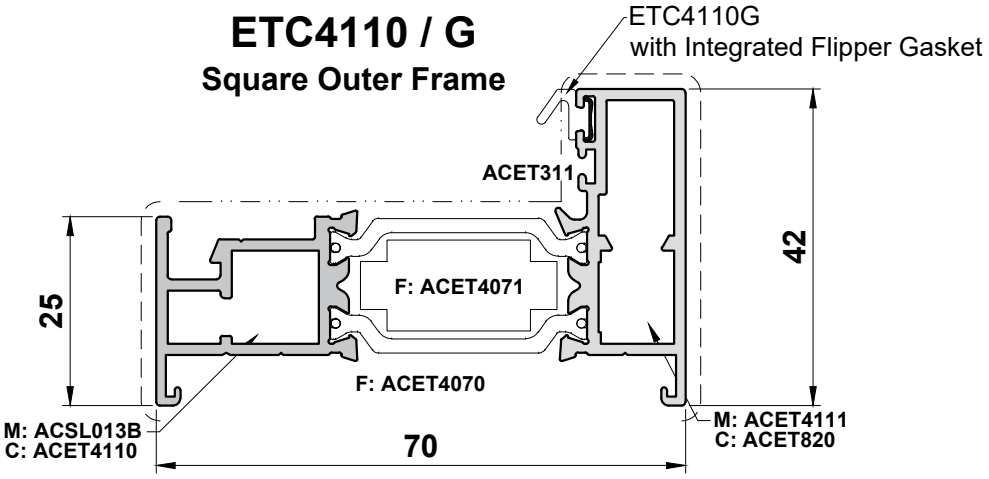

ETC4111 / G

Long Leg Square Outerframe

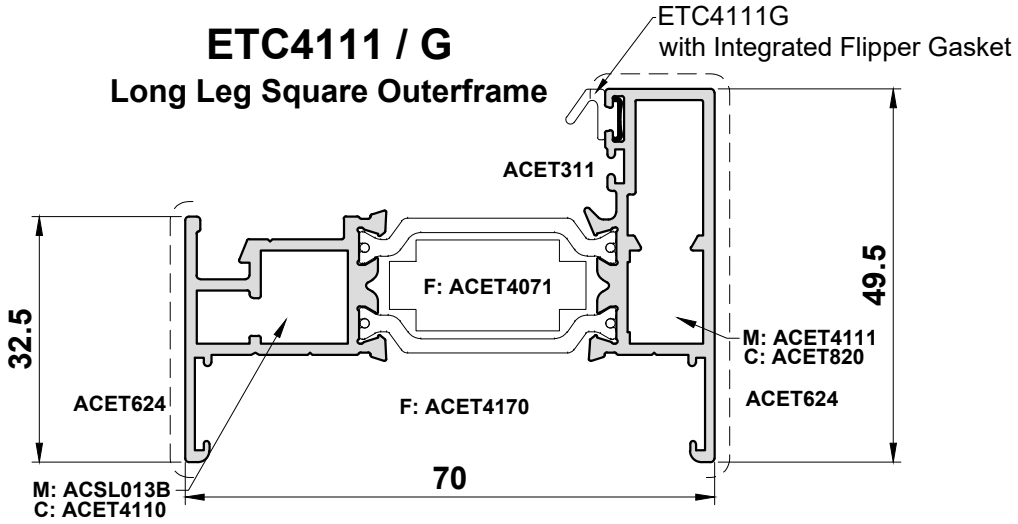

Scale 1:1

Primary Visible Side - - - - - - - - - - - - - - - - - - Secondary Visible Side — · — · — · — · — · — · — · —

ETC4112 / G

Stepped Outer Frame

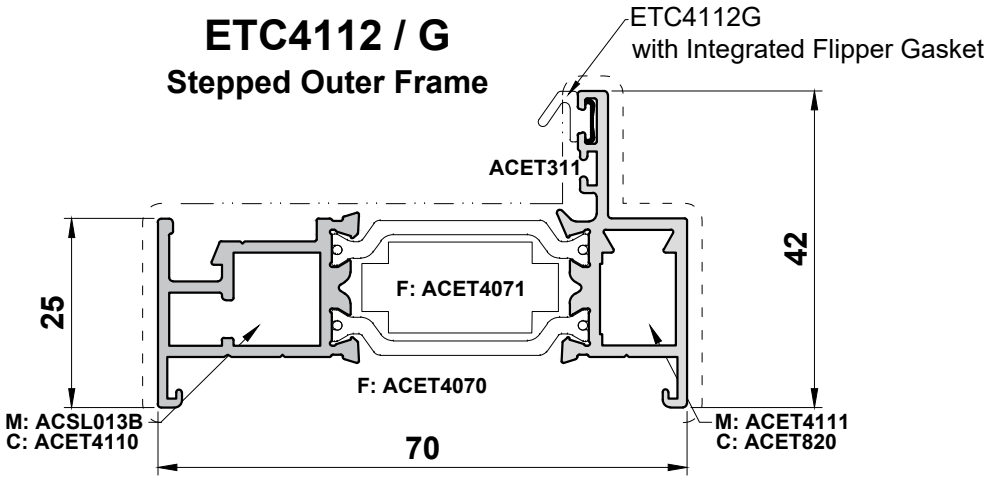

ETC4113

Odd Leg Stepped Outerframe

Crimp Only

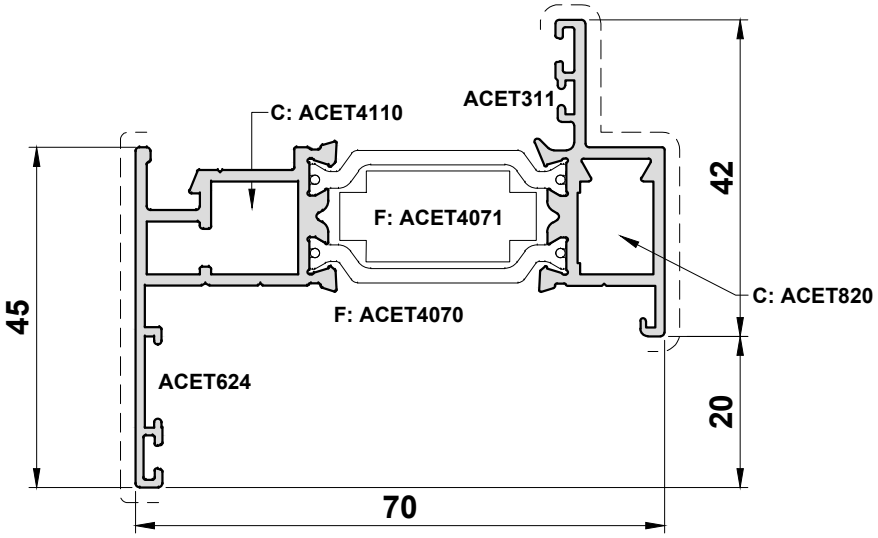

Scale 1:1

Primary Visible Side — — — — — — — — — — — — — — — — Secondary Visible Side — · — · — · — · — · — · — · —

ETC4101 / G

Long Leg Square Outer Frame

Crimp Only

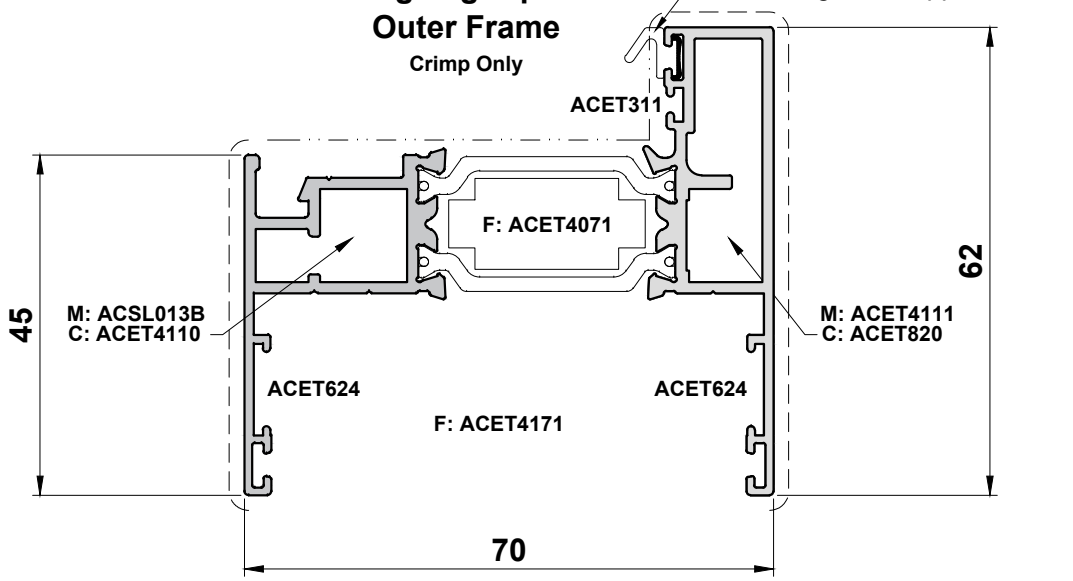

ETC4114

Odd Leg Square Outerframe

Crimp Only

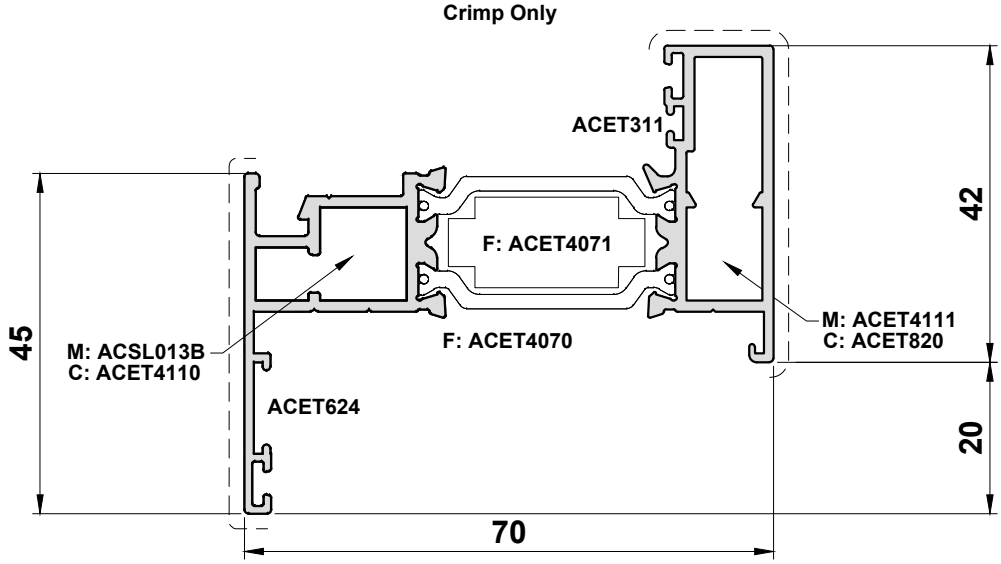

Scale 1:1

Primary Visible Side — — — — — — — — — — — — — — — — Secondary Visible Side — · — · — · — · — · — · — · —

ETC4115 / G

Flush Outer Frame

Crimp Only

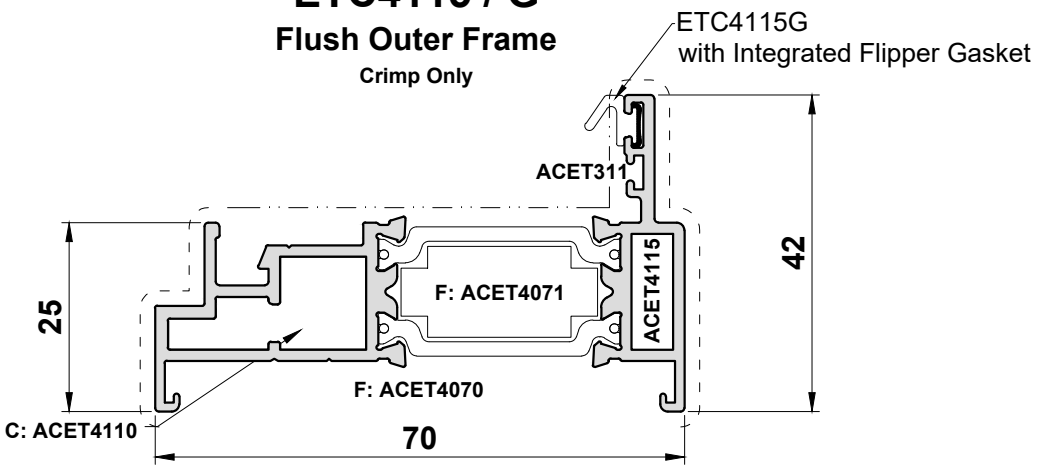

ETC4116 / G

Long Leg Flush Outer Frame

Crimp Only

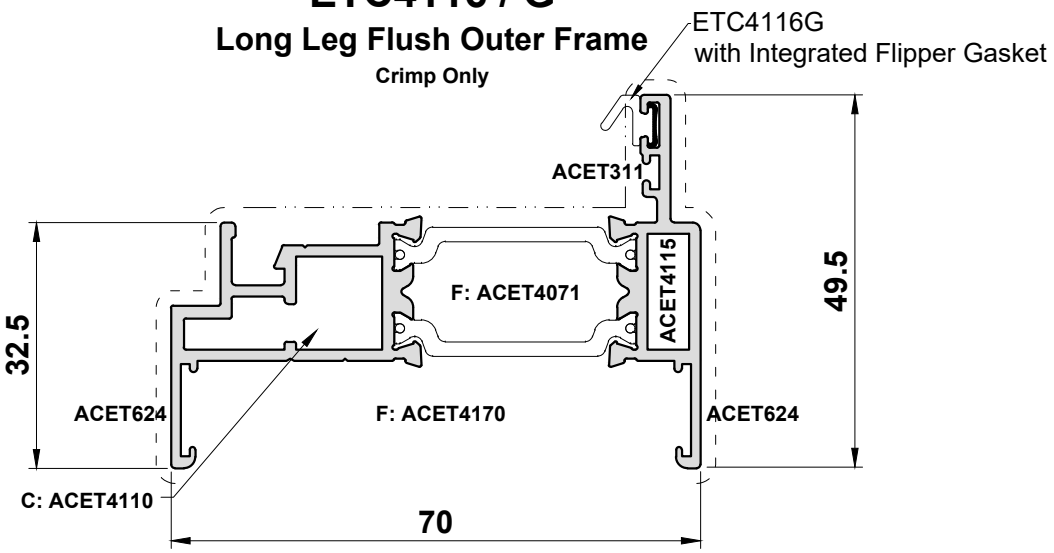

Scale 1:1

Primary Visible Side - - - - - - - - - - - - - - - - - - Secondary Visible Side — · — · — · — · — · — · — · —

ETC4105 / G

Flush Outer Frame

Crimp Only

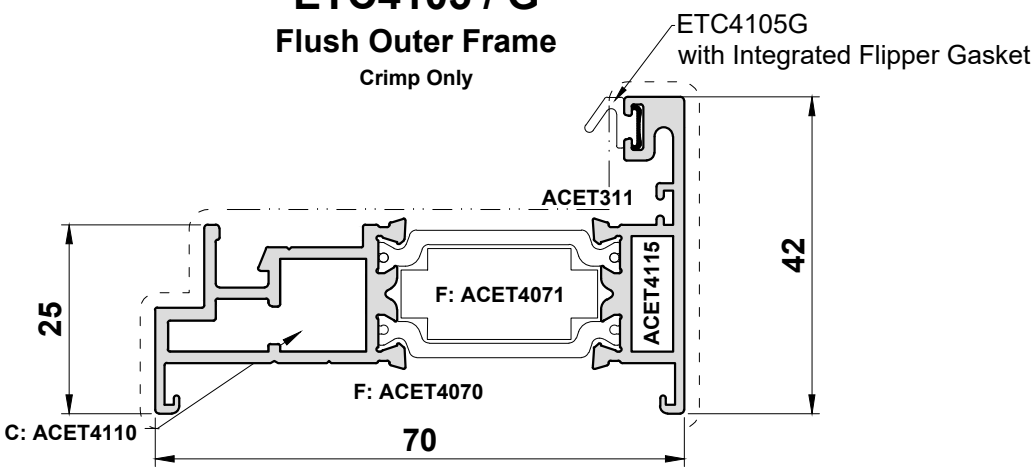

ETC4134 / G

Flush Transom/Mullion

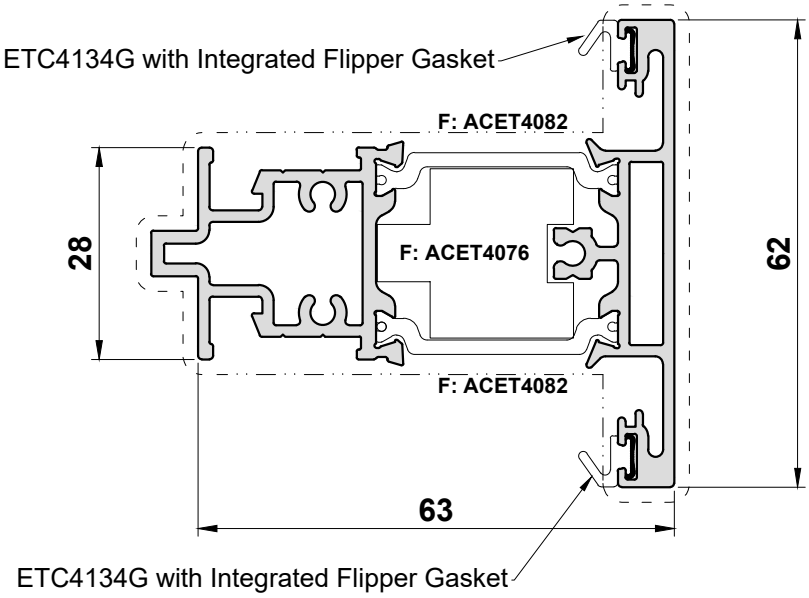

Scale 1:1

Primary Visible Side - - - - - - - - - - - - - - - - - - Secondary Visible Side — · — · — · — · — · — · — · —

ETC4117

Curtain Wall Adaptor

(For Single Opening Lights Only)
Pneumatic crimper only.

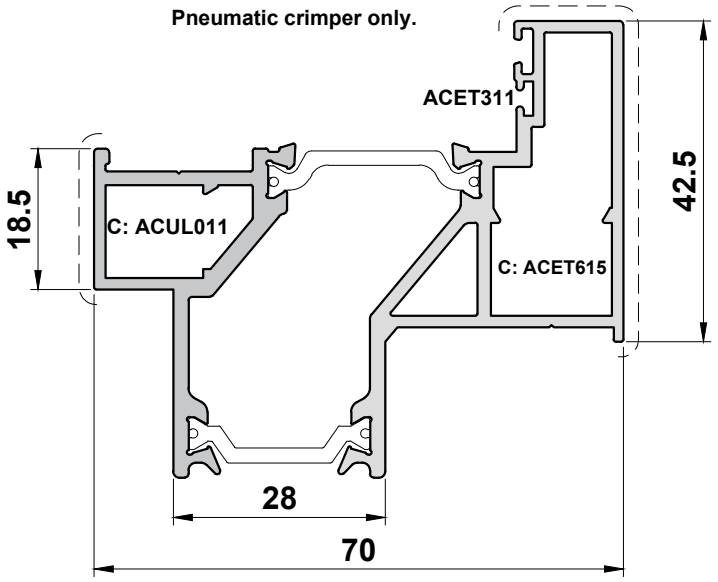

ETC4120 / G

Externally Beaded Sash
(Crimp Only)

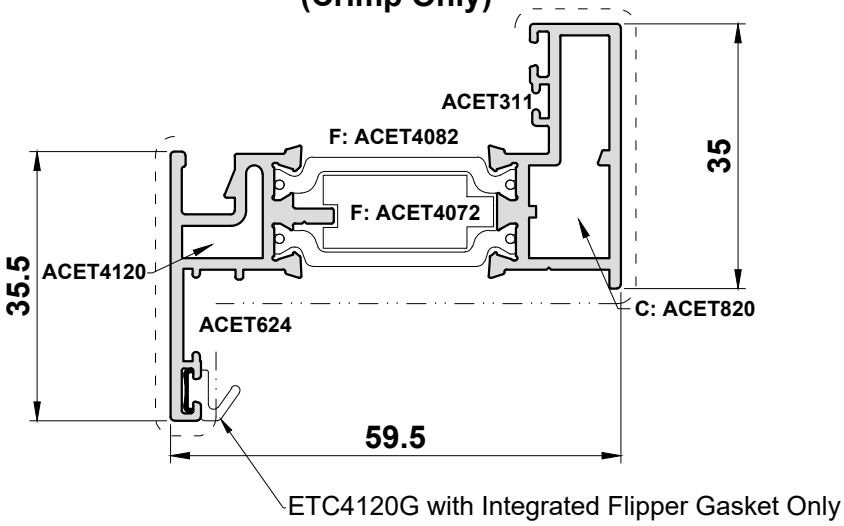

Scale 1:1

Primary Visible Side - - - - - - - - - - - - - - - - - - Secondary Visible Side — · — · — · — · — · — · — · —

ETC4132 / G

ETC4124 Dummy Transom

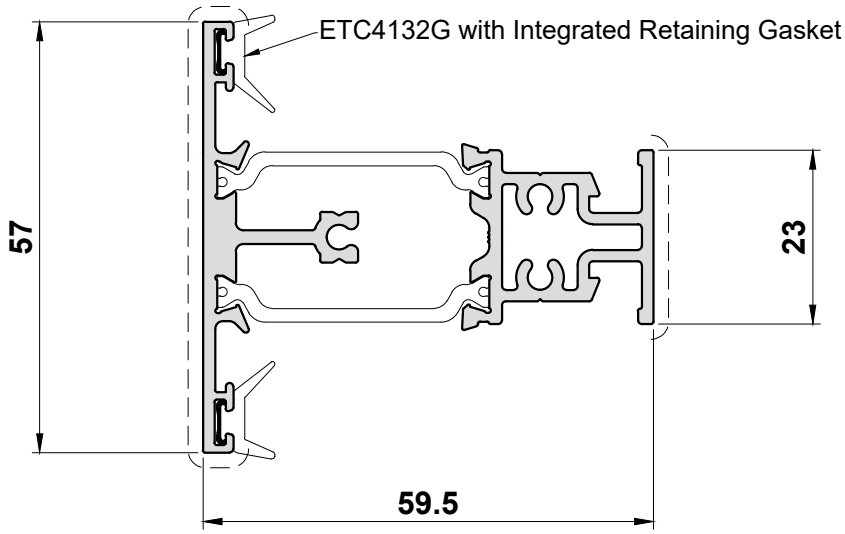

ETC4124 / G

Slimline Sash

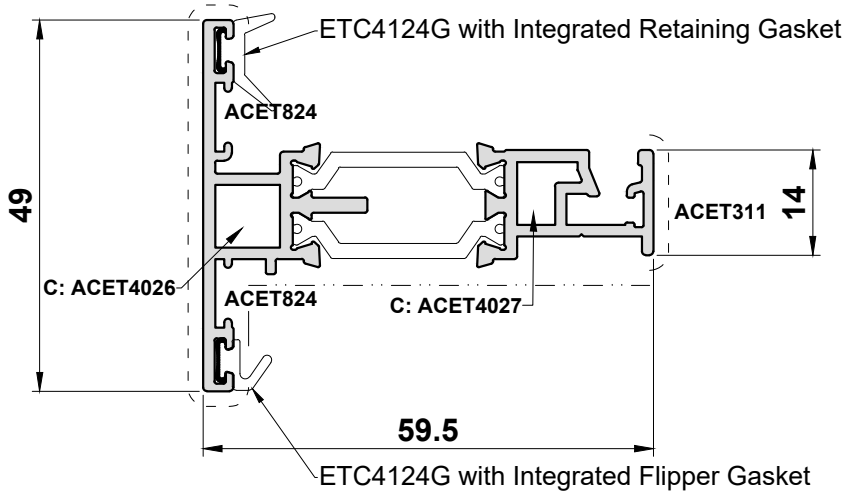

Scale 1:1

Primary Visible Side - - - - - - - - - - - - - - - - - - Secondary Visible Side — · · — · · — · · — · · — · · — · · —

ETC4133 / G

ETC4125 Dummy Transom

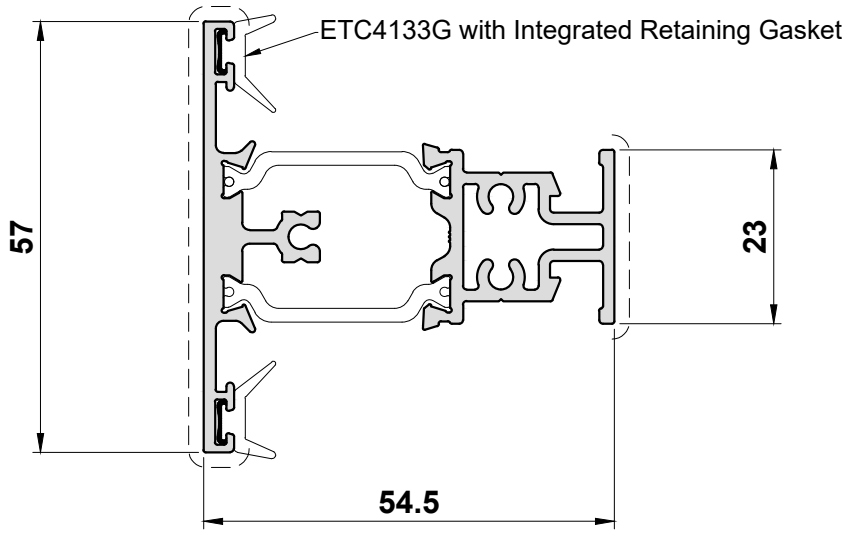

ETC4125 / G

Heritage Sash
for 24mm Glazing Only

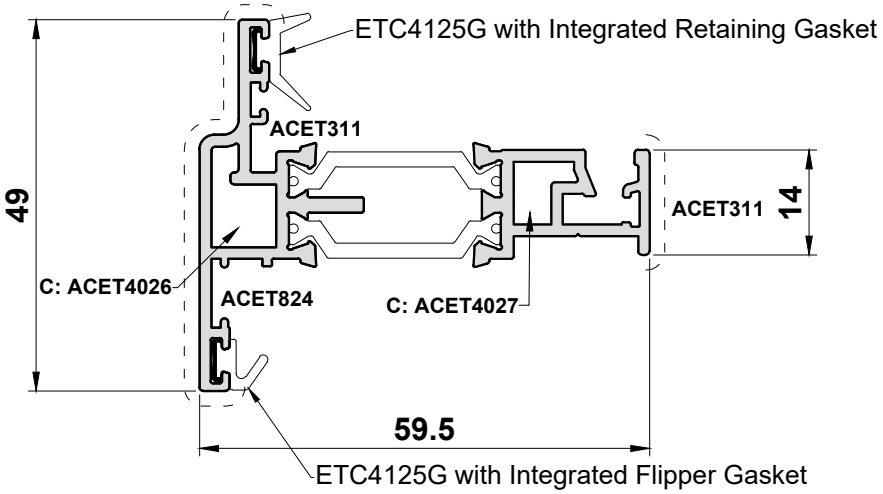

Scale 1:1

Primary Visible Side - - - - - - - - - - - - - - - - - - Secondary Visible Side — · · — · · — · · — · · — · · — · · —

ETC4123 / G

Chamfered Sash for 24mm Glazing Only

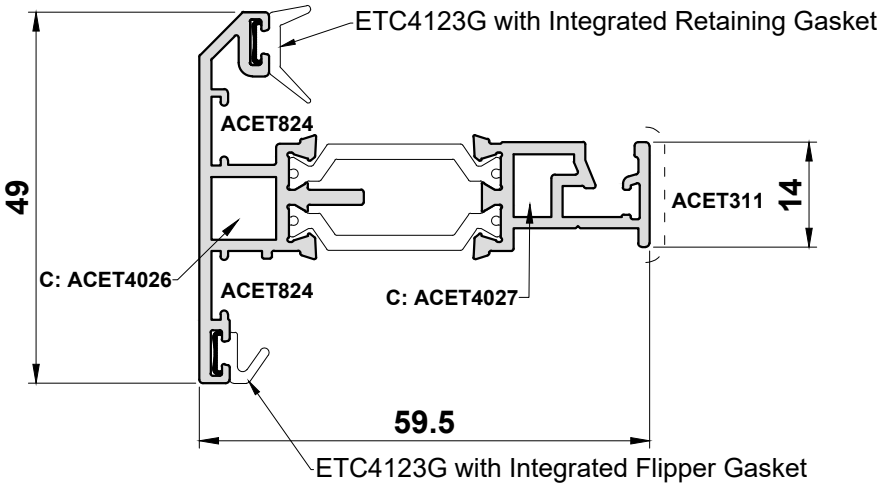

ETC4129 / G

Internally Bead Sash

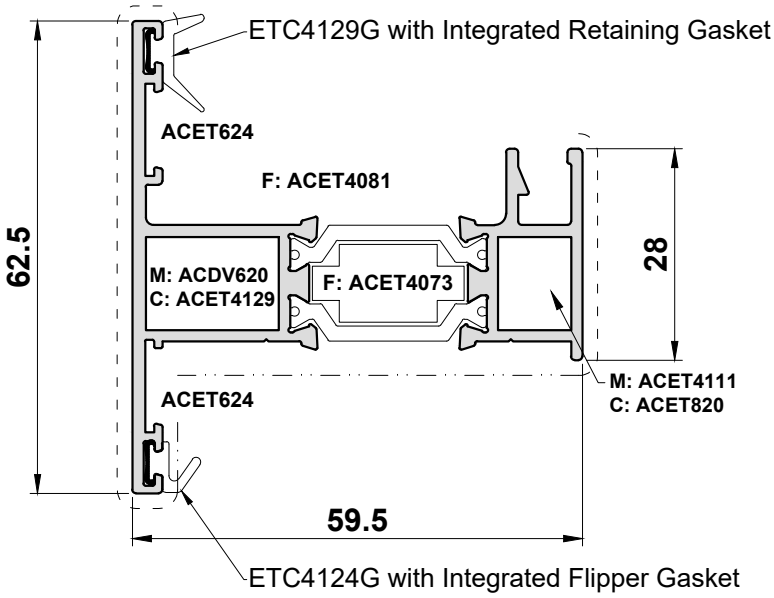

Scale 1:1

Primary Visible Side - - - - - - - - - - - - - - - - - - Secondary Visible Side — · — · — · — · — · — · —

ETC4130 / G

Transom/Mullion

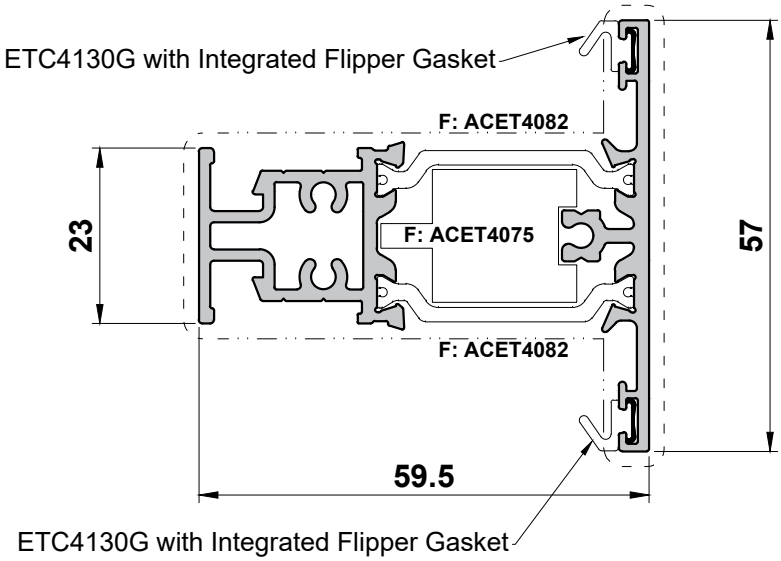

ETC4330

Reinforced Transom/Mullion

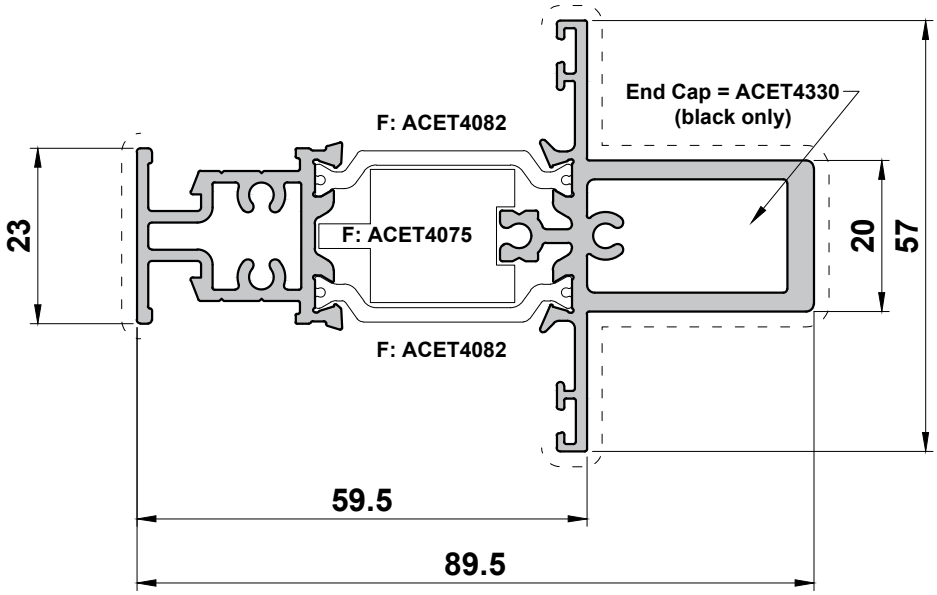

Scale 1:1

Primary Visible Side - - - - - - - - - - - - - - - - - - Secondary Visible Side — · — · — · — · — · — · — · —

ETC4136

Reinforced Transom/Mullion

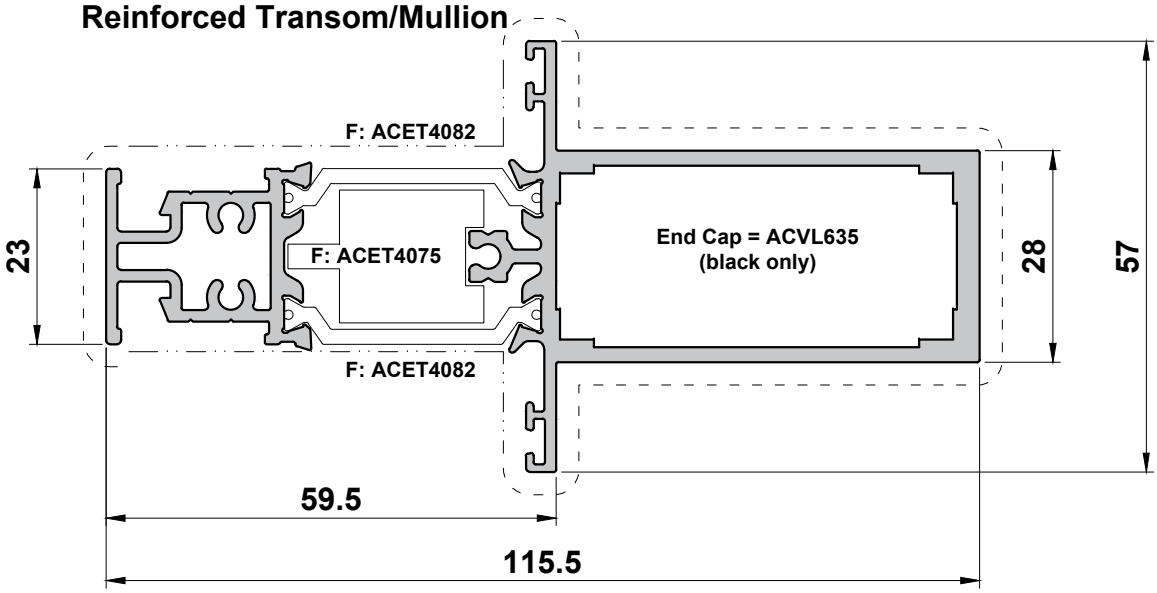

Scale 1:1

Primary Visible Side — — — — — — — — — — — — — — — — Secondary Visible Side — · — · — · — · — · — · — · —

ETC4135 / G

Flush Transom/Mullion

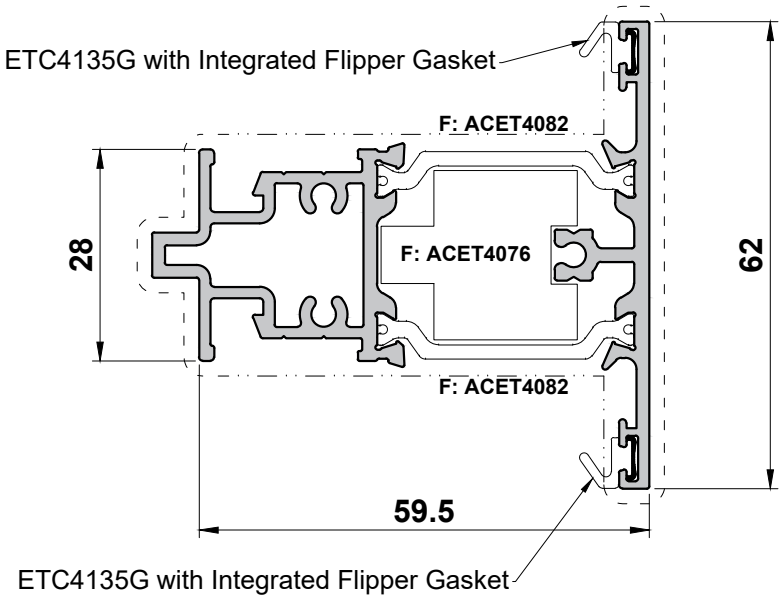

ETC4137 / G

Heritage Flush Transom/Mullion

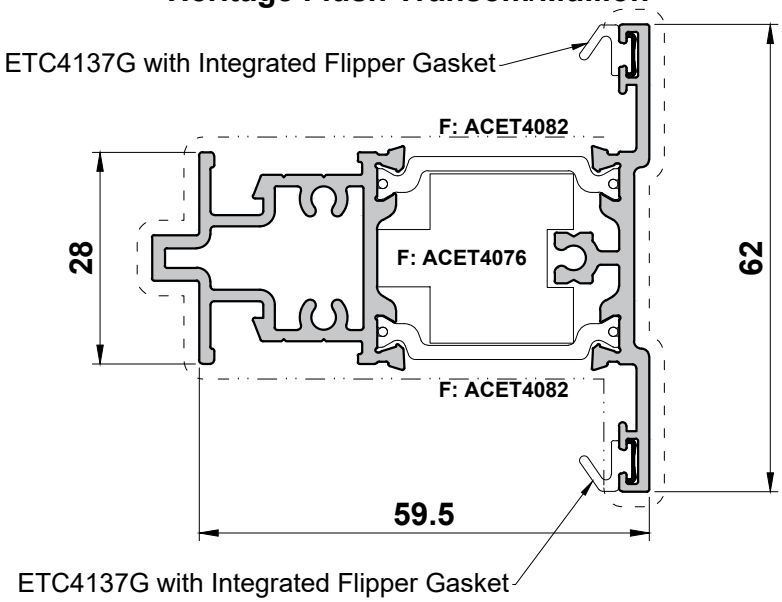

Scale 1:1

Primary Visible Side - - - - - - - - - - - - - - - - - - Secondary Visible Side — · · — · · — · · — · · — · · — · · —

ETC4138

French Casement Mullion

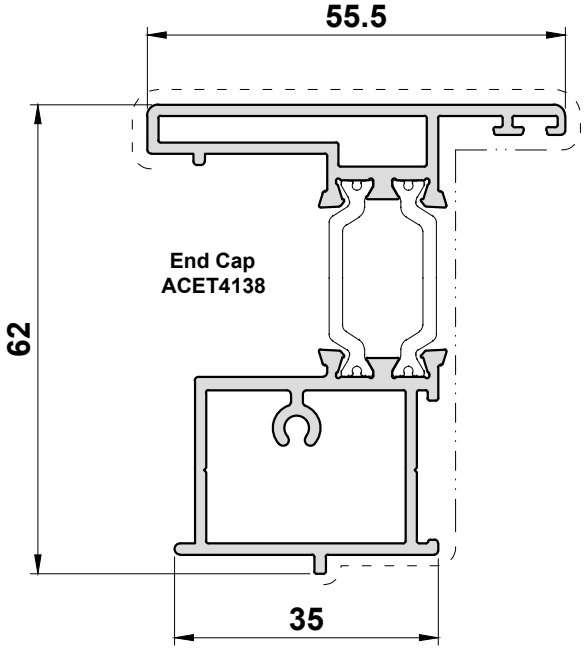

ETC4139

French Casement Mullion
for Slimline Sash ETC4124 & ETC4125

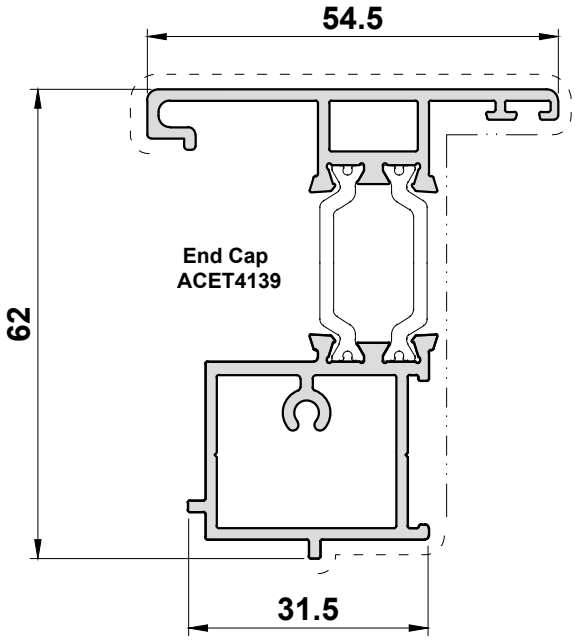

Scale 1:1

Primary Visible Side — — — — — — — — — — — — — — — — Secondary Visible Side — · — · — · — · — · — · — · —

ETC4146

Reverse Adaptor for Opening Sash

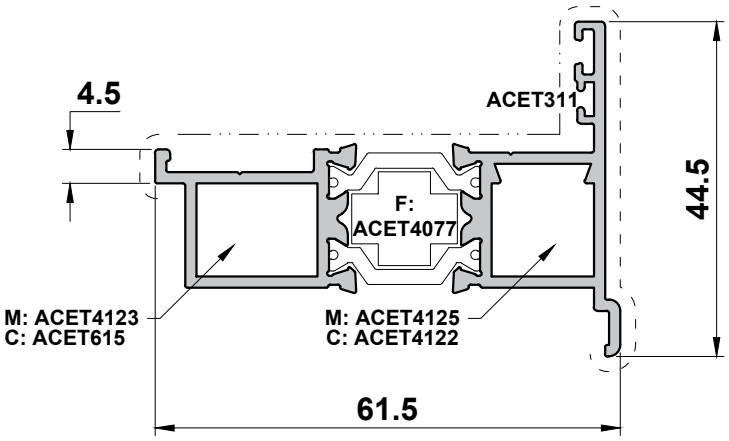

ETC4147

Reverse Adaptor for Fixed Pane (Crimp Only)

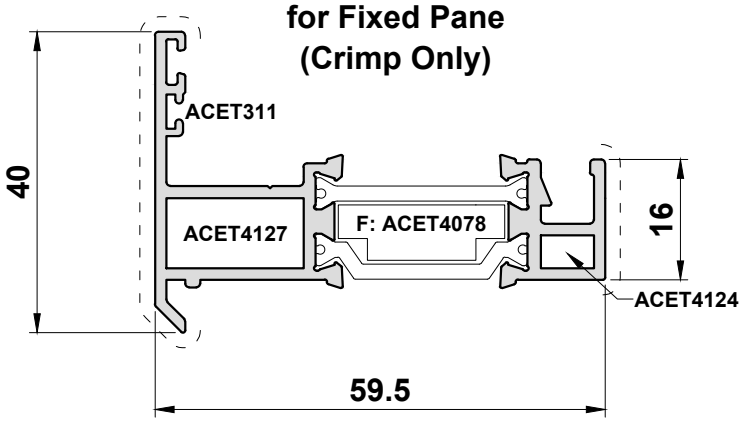

Scale 1:1

Primary Visible Side - - - - - - - - - - - - - - - - Secondary Visible Side — · · — · · — · · — · · — · · — · · —

UN3162N
23.5mm Bead

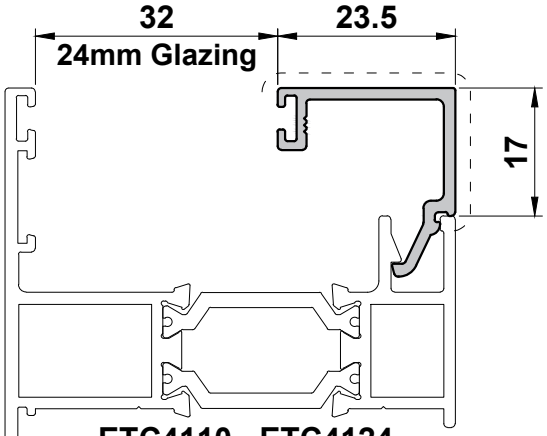

UN3162NG
23.5mm Bead with Gasket

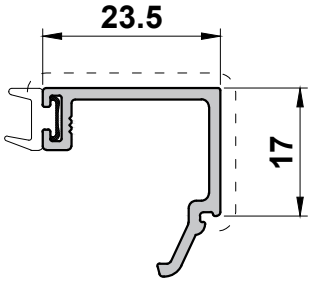

ETC4110	ETC4124
ETC4111	ETC4129
ETC4112	ETC4130
ETC4113	ETC4135
ETC4115	ETC4136
ETC4116	ETC4147

UN3160
19.5mm Bead

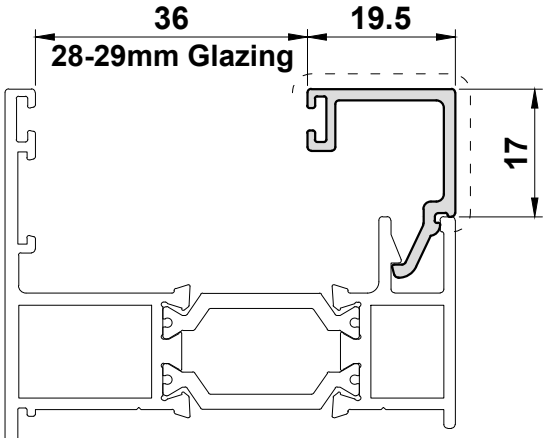

UN3160G
19.5mm Bead with Gasket

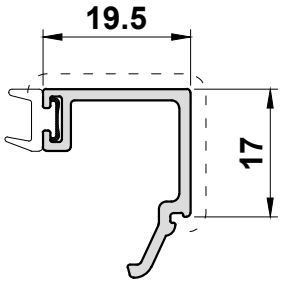

ETC4110	ETC4124
ETC4111	ETC4125 (24mm glazing)
ETC4112	ETC4129
ETC4113	ETC4130
ETC4115	ETC4135
ETC4116	ETC4136
	ETC4147

See Section E glazing chart for ETC4120 glazing details

Primary Visible Side - - - - - - - - - - - - - - - - - - Secondary Visible Side — · · — · · — · · — · · — · · — · · — · · —

UN3164
15.5mm Bead

UN3164G
15.5mm Bead with Gasket

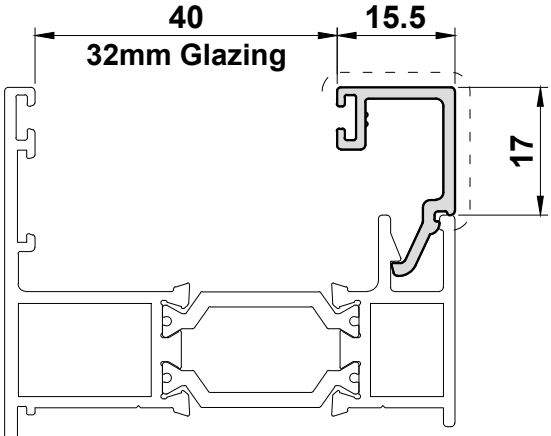

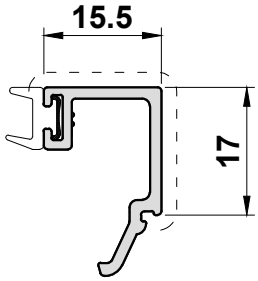

ETC4110 ETC4129
ETC4111 ETC4130
ETC4112 ETC4135
ETC4113 ETC4136
ETC4115 ETC4147
ETC4116

ETC4179
11.5mm Bead

ETC4179G
11.5mm Bead with Gasket

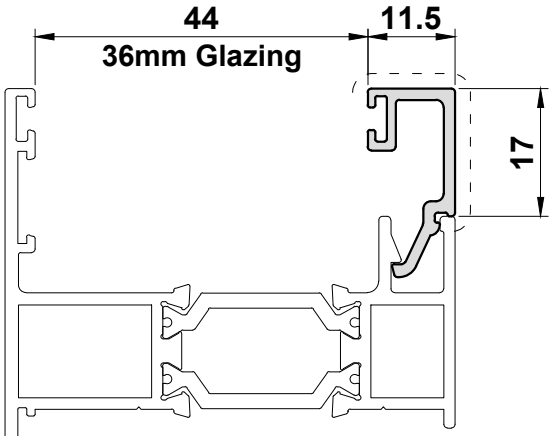

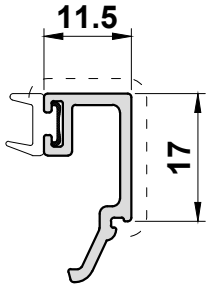

ETC4110 ETC4129
ETC4111 ETC4130
ETC4112 ETC4135
ETC4113 ETC4136
ETC4115 ETC4147
ETC4116

Scale 1:1

See Section E glazing chart for ETC4120 glazing details

Primary Visible Side - - - - - - - - - - - - - - - - - - Secondary Visible Side — · · — · · — · · — · · — · · — · · —

UN3166

8.5mm Bead

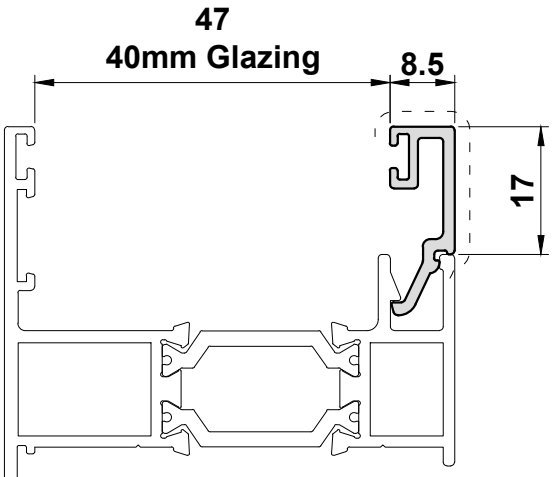

ETC4110	ETC4129
ETC4111	ETC4130
ETC4112	ETC4135
ETC4113	ETC4136
ETC4115	ETC4147
ETC4116	

UN3168

3.5mm Bead

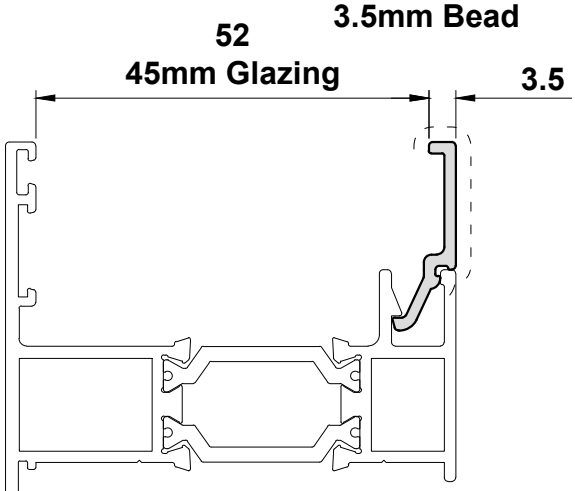

ETC4110	ETC4129
ETC4111	ETC4130
ETC4112	ETC4135
ETC4113	ETC4136
ETC4115	ETC4147
ETC4116	

See Section E glazing chart for ETC4120 glazing details

Scale 1:1

Primary Visible Side - - - - - - - - - - - - - - - - - - Secondary Visible Side — · — · — · — · — · — · — · —

VL72

Drip / Weather Bar

End Caps: ACVL059

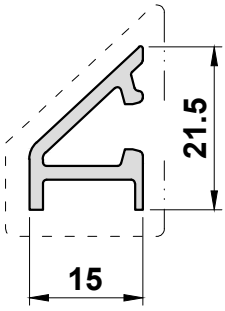

UN3012

Bay Pole Adaptor

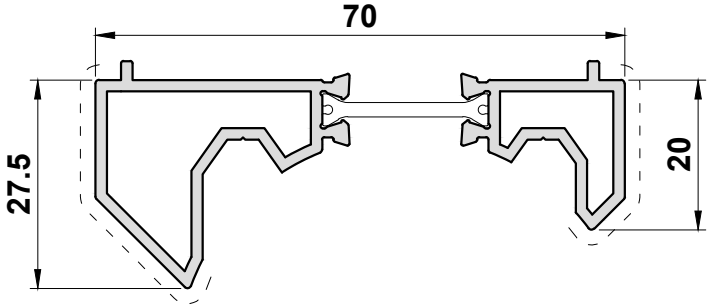

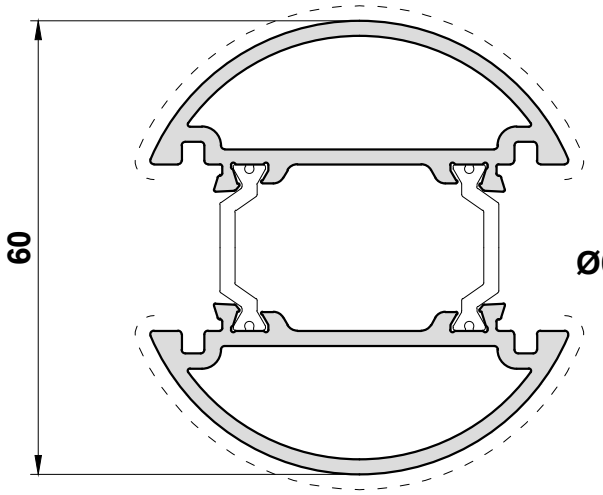

ETC869

Ø60mm Bay Pole

Scale 1:1

Primary Visible Side — — — — — — — — — — — — — — — — Secondary Visible Side — · · — · · — · · — · · — · · — · · — · · —

UN3081
Bay Pole Cover

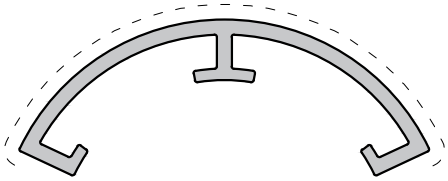

PCX55
Bay Pole Isolator

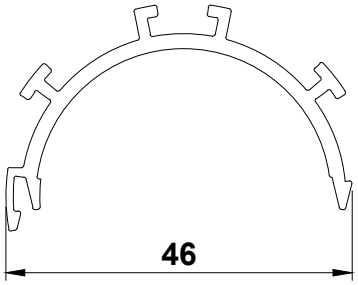

UN3080
Bay Pole

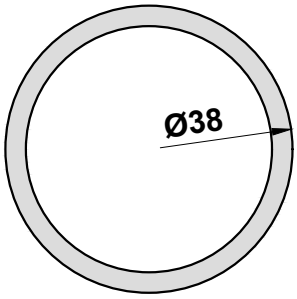

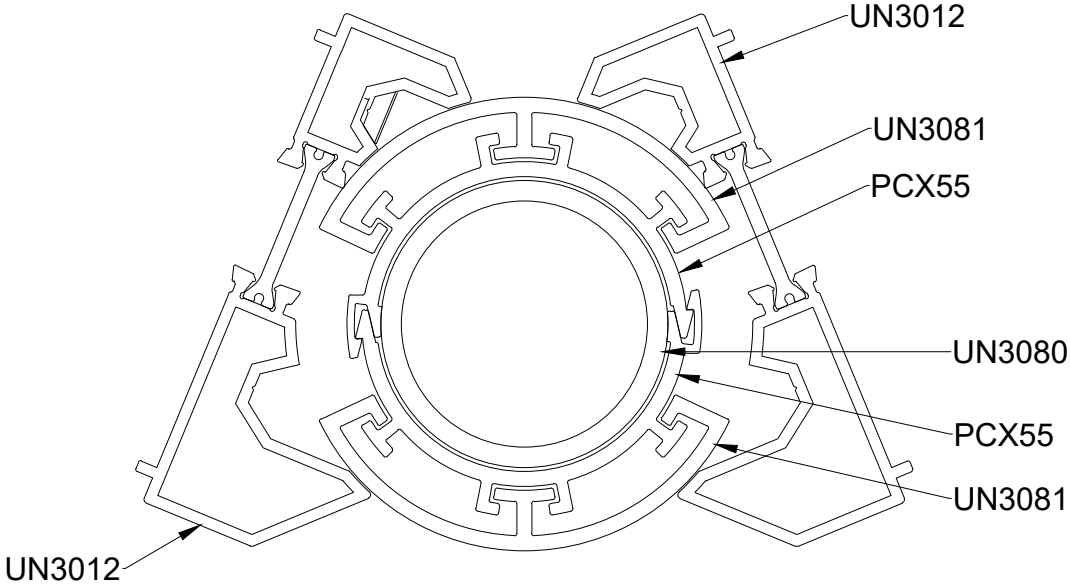

Scale 1:1

Primary Visible Side — — — — — — — — — — — — — — — — Secondary Visible Side — · — · — · — · — · — · — · —

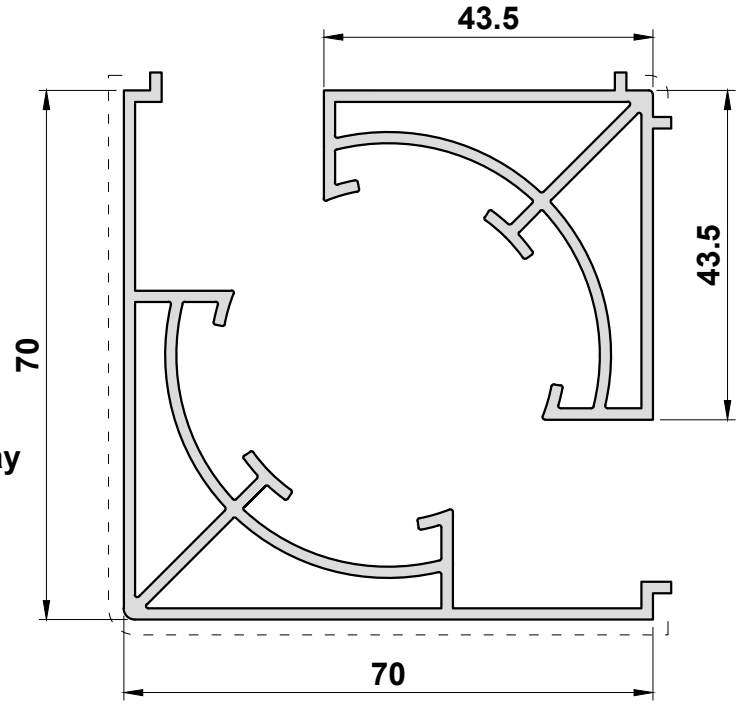

UN3083
Internal 90° Bay Pole Adaptor

UN3082
External 90° Bay Pole Adaptor

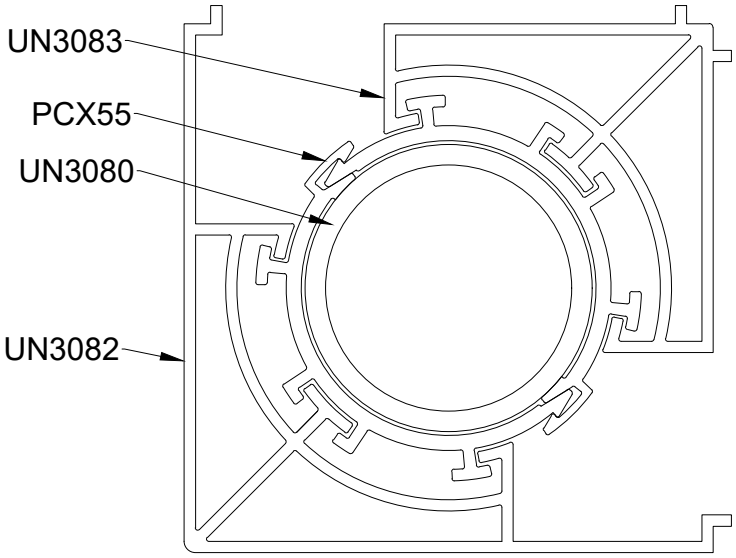

Scale 1:1

Primary Visible Side - - - - - - - - - - - - - - - - - - Secondary Visible Side — · — · — · — · — · — · —

UN3010

90° Corner Post

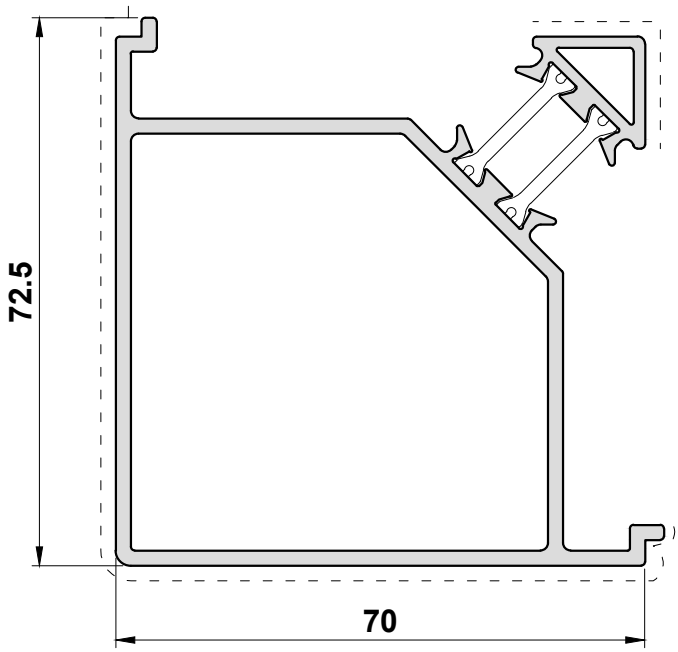

UN3011

135° Bay Pole

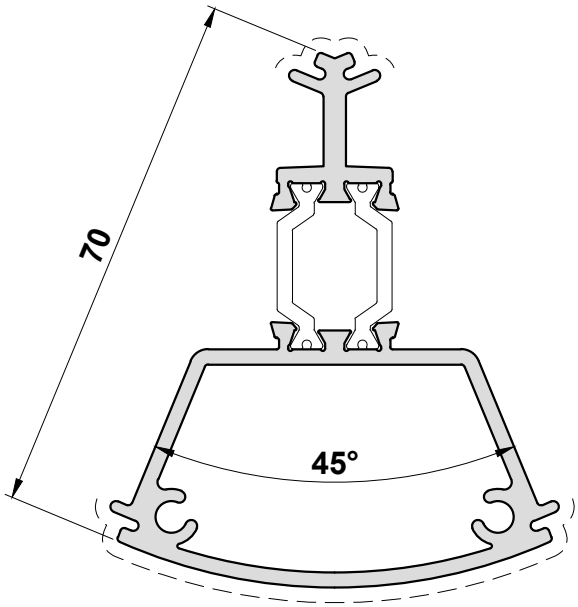

Scale 1:1

Primary Visible Side — — — — — — — — — — — — — — — — Secondary Visible Side — · — · — · — · — · — · — · —

ETC081
169° - 150°
Bay Pole Adaptor

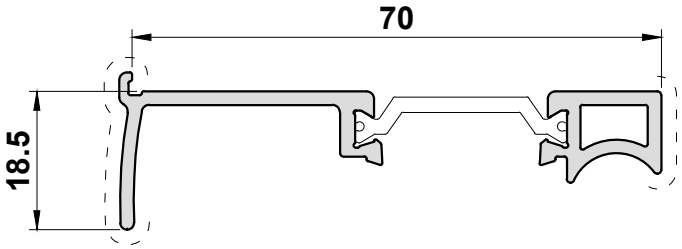

ETC080
Bay Pole

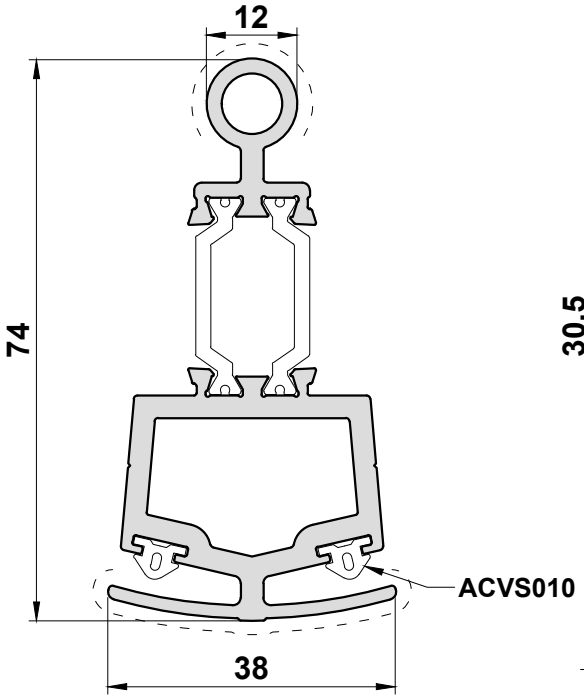

ETC082
149° - 130°
Bay Pole Adaptor

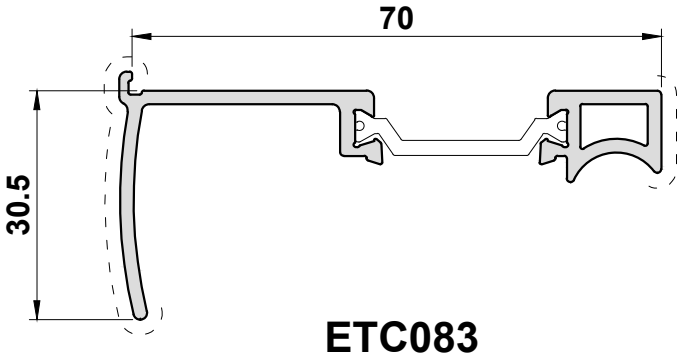

ETC083
129° - 115°
Bay Pole Adaptor

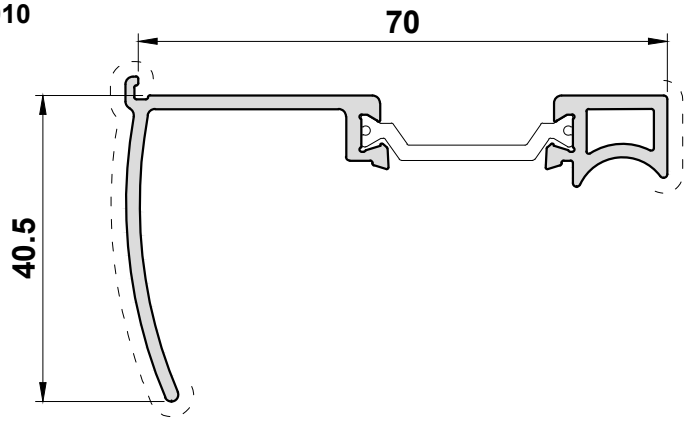

Scale 1:1

Primary Visible Side - - - - - - - - - - - - - - - - - - Secondary Visible Side — · — · — · — · — · — · — · —

ETC357

Coupler

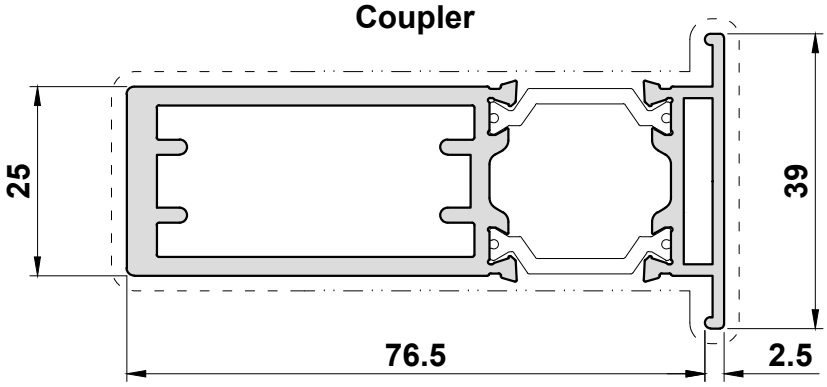

UN3015

70mm x 15mm Coupler

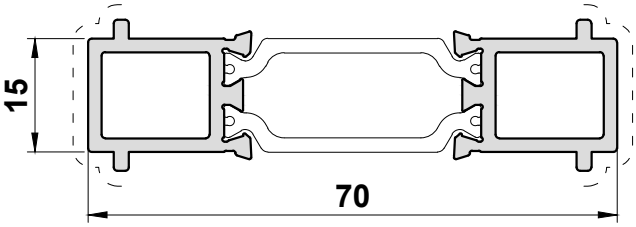

UN3000

Flush Horizontal Coupler

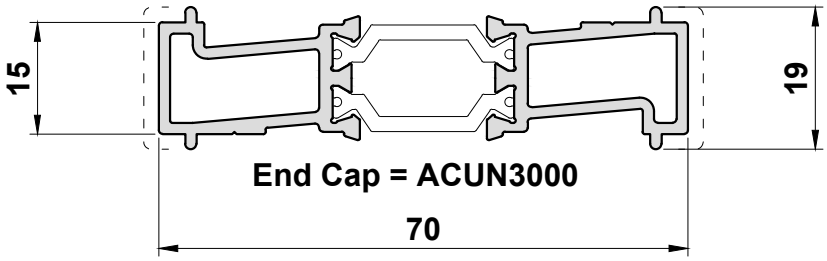

End Cap = ACUN3000

Scale 1:1

Primary Visible Side — — — — — — — — — — — — — — — — Secondary Visible Side — · — · — · — · — · — · — · —

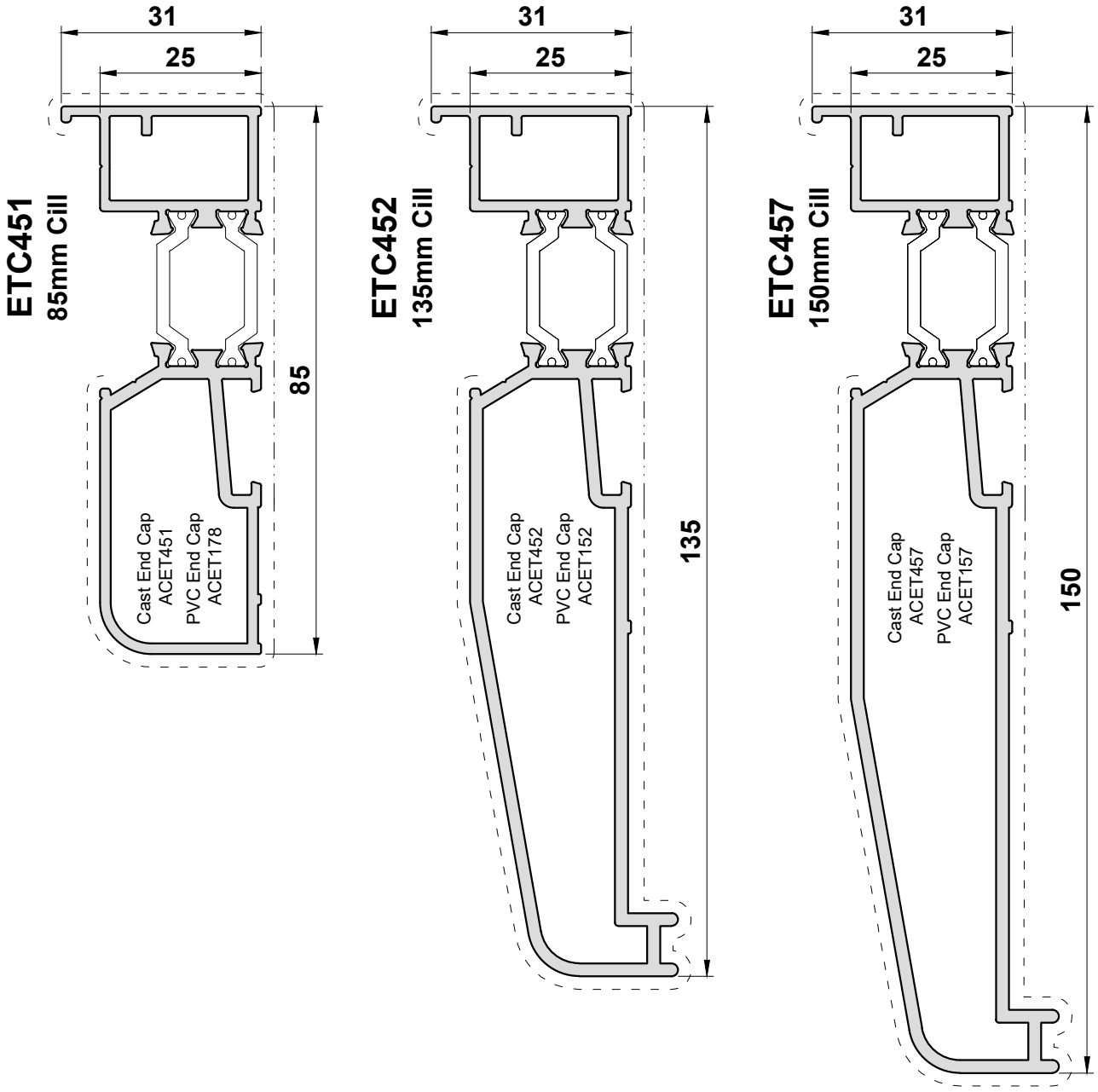

Scale 1:1

Primary Visible Side — — — — — — — — — — — — — — — — — — Secondary Visible Side — · — · — · — · — · — · — · — · —

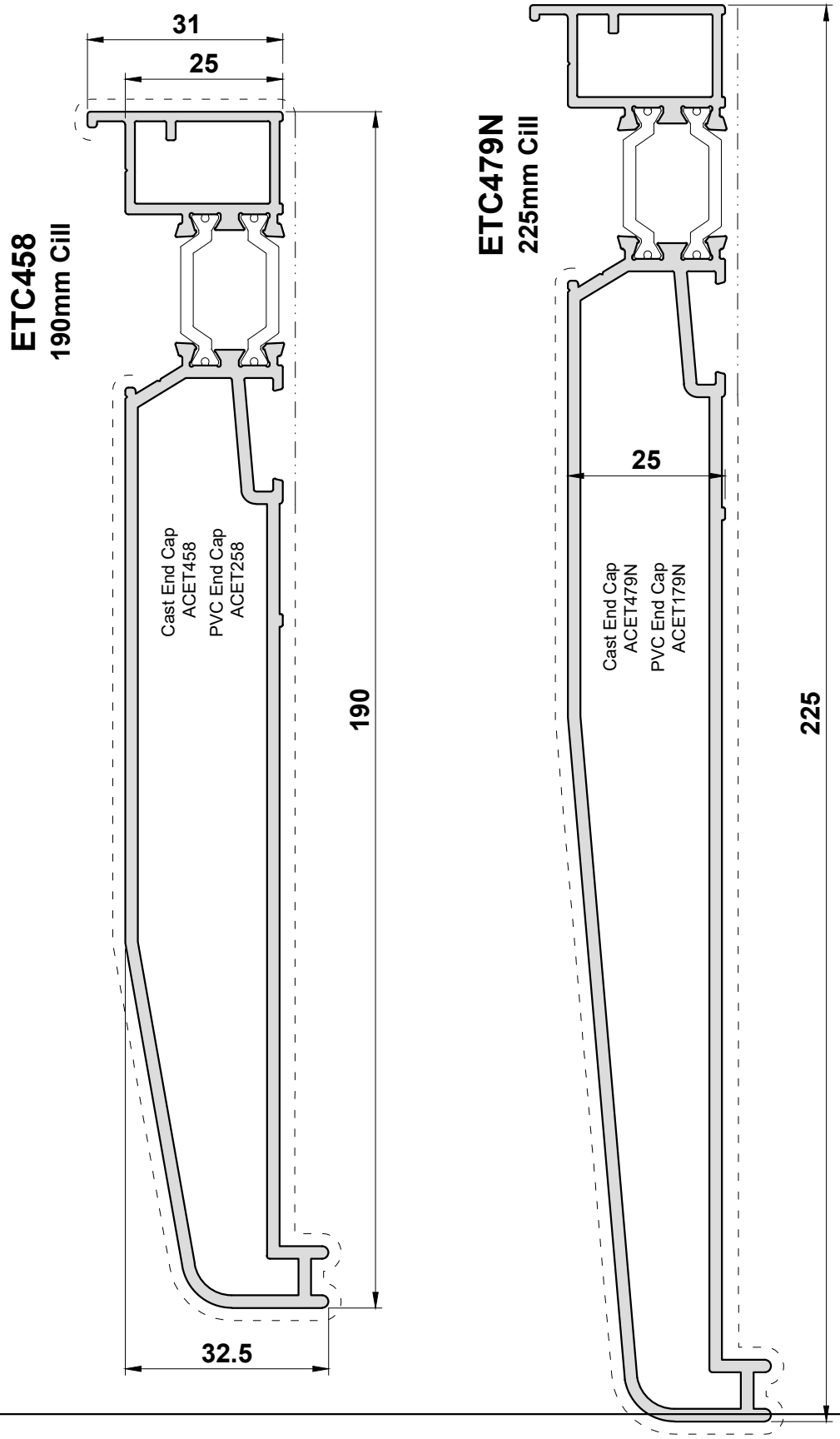

Scale 1:1

Primary Visible Side – – – – – – – –   **Secondary Visible Side** — · — · —

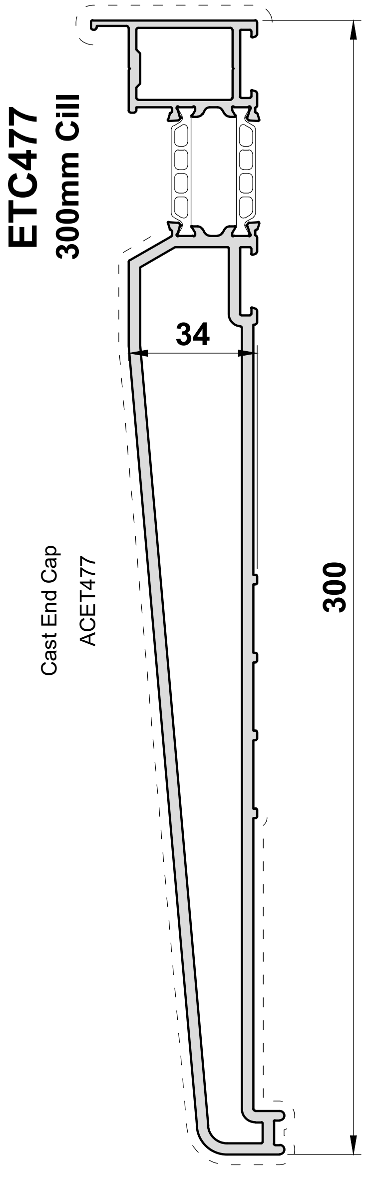

Scale 1:2

Primary Visible Side - - - - - - - - - - - - - - - - - - Secondary Visible Side — · · — · · — · · — · · — · · — · · —

UN3020

70mm x 20mm Frame Extension

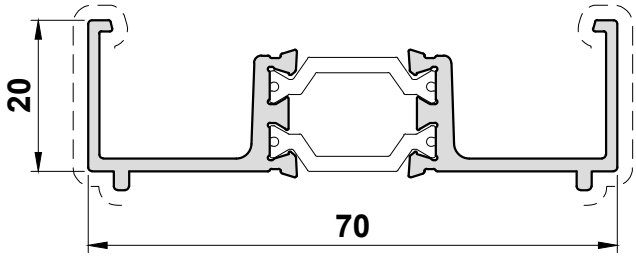

UN3370

30mm x 70mm Head Extension

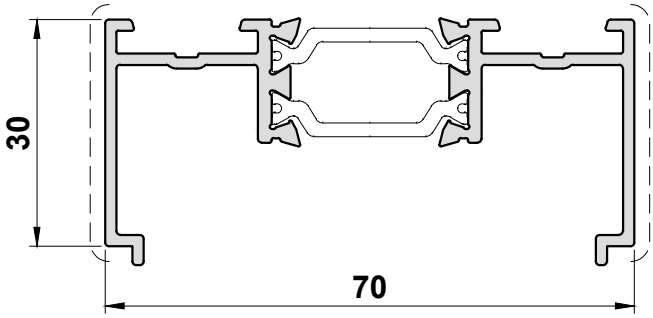

UN3270

70 x 42mm Head Extension

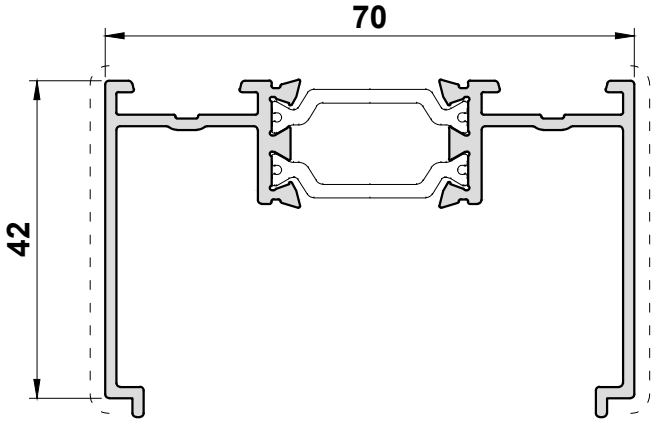

Scale 1:1

Primary Visible Side — — — — — — — — — — — — — — — — Secondary Visible Side — · — · — · — · — · — · — · —

UN3570

70 x 42mm Hooded Head Extension

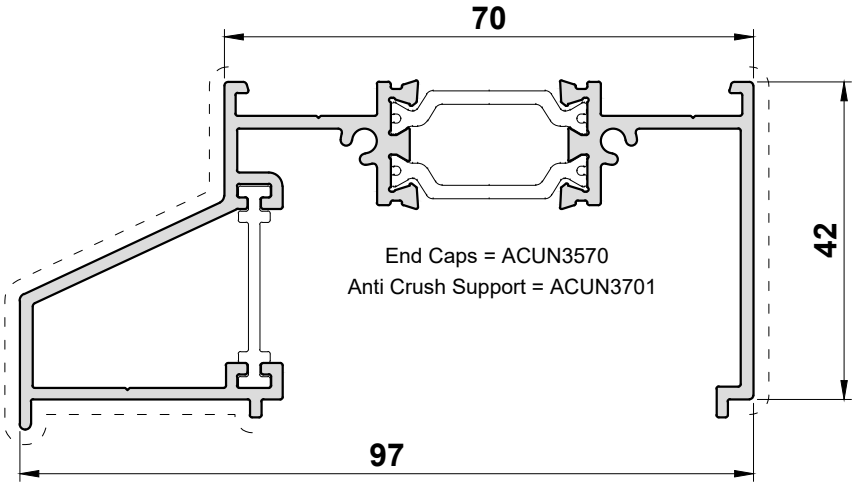

UN3577

70 x 42mm Hooded Head Extension

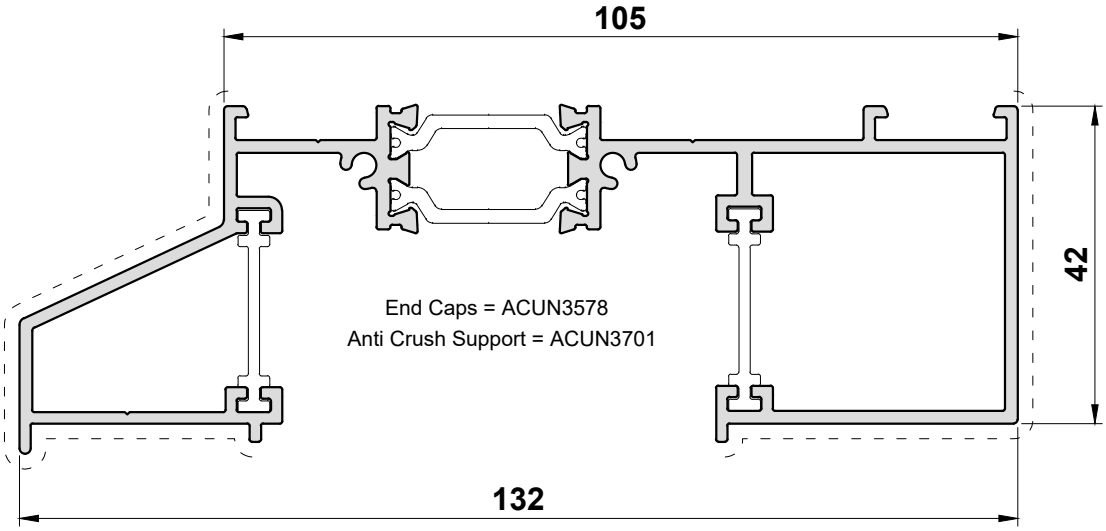

Scale 1:1

Primary Visible Side - - - - - - - - - - - - - - - - - - Secondary Visible Side — · — · — · — · — · — · — · —

ETC4131

Transom

(Cruciform not available)

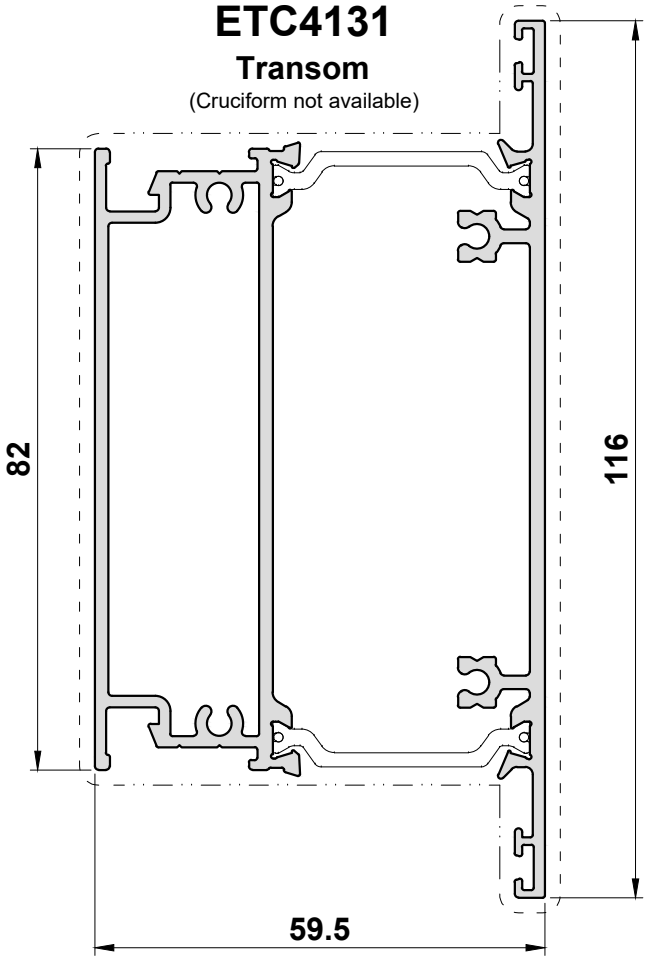

Scale 1:1

Primary Visible Side — — — — — — — — — — — — — — — — Secondary Visible Side — · — · — · — · — · — · — · —

ETC4410

Internally Glazed Outer frame

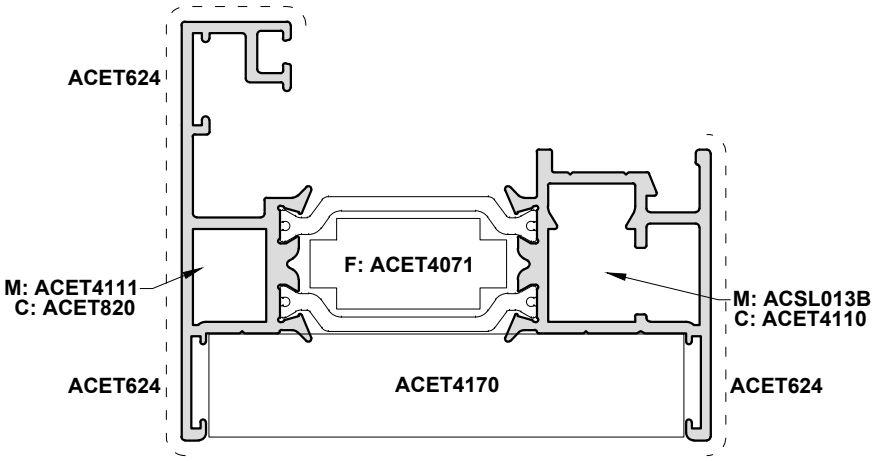

ETC4430

Internally Glazed Transom

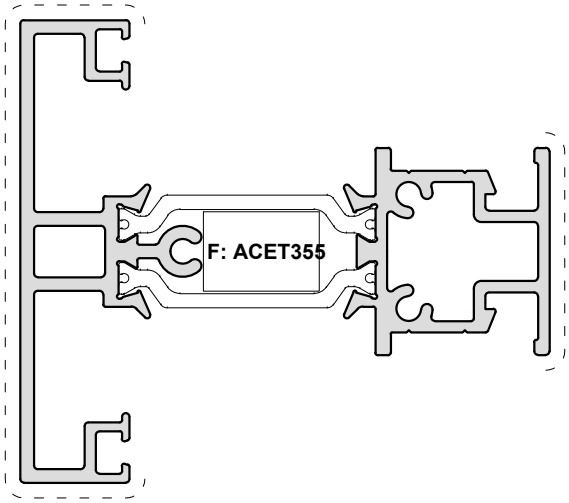

ETC4446

Reverse Adaptor

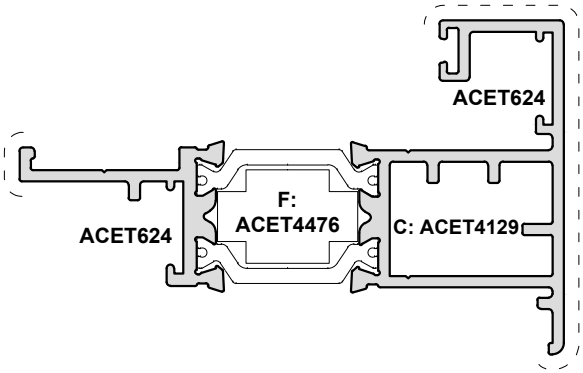

Scale 1:1

Section B

Accessories

Photos & Drawings

Countersunk Screws

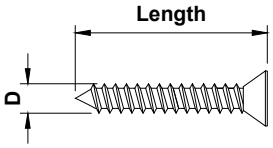

Gauge	'D' (mm)
No.6	3.5
No.7	3.8
No.8	4
No.10	5
No.12	6

Part Number	Gauge	X	Length	Description	Box Qty.
ACUN3530	No.6	X	5/8" (16mm)	Countersunk Pozi Self Tapper S/S	100
MUA025SSZ	No.6	X	1" (25mm)	Countersunk Pozi Self Tapper S/S	100
ACET067	No.7	X	1/2" (12mm)	Countersunk Pozi Self Tapper S/S	100
ACET060	No.7	X	1" (25mm)	Countersunk Pozi Self Tapper S/S	100
ACET066	No.7	X	1 1/2" (40mm)	Countersunk Pozi Self Tapper S/S	100
MUA067SSZ	No.7	X	2" (50mm)	Countersunk Pozi Self Tapper S/S	100
ACET064	No.8	X	5/8" (16mm)	Countersunk Pozi Self Tapper S/S	100
ACUN3512	No.8	X	1 1/4" (30mm)	Countersunk Pozi Self Tapper S/S	100
ACUN3513	No.8	X	1 3/4" (45mm)	Countersunk Pozi Self Tapper S/S	100
ACET072	No.8	X	2 1/2" (60mm)	Countersunk Pozi Self Tapper S/S	100
ACET048	No.10	X	3/8" (10mm)	Countersunk Pozi Self Tapper S/S	100
ACIM062	No.10	X	1 1/4" (30mm)	Countersunk Pozi Self Tapper S/S	100
ACET062	No.10	X	2" (50mm)	Countersunk Pozi Self Tapper S/S	100
ACET076	No.10	X	2 1/2" (60mm)	Countersunk Pozi Self Tapper S/S	100

POLYAMIDE SCREWS

Part Number	Gauge	X	Length	Description	Box Qty.
ACET490	4.3mm	X	16mm	Countersunk PH2 Polyamide Screw	1000
ACET290	4.3mm	X	20mm	Countersunk PH2 Polyamide Screw	100
ACET390	4.3mm	X	25mm	Countersunk PH2 Polyamide Screw	200
ACET190	4.3mm	X	45mm	Countersunk PH2 Polyamide Screw	1000
ACVS062	4.3mm	X	65mm	Countersunk PH2 Polyamide Screw	1000

T-BARS
ACVG65=2.5mm
ACVG66=3.0mm
ACVL150=4.0mm

Screw (Grub)

MF = Mill Finish
SA = Silver Anodised
KL = Basic Colour
HP = Special Colour
SSC = Smooth Satin Chrome
SMC = Smokey Chrome
PC = Polished Chrome
W = White
Z = Black

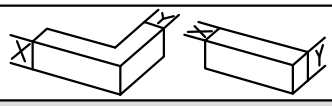

Pan Head Screws

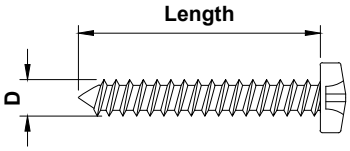

Gauge	'D' (mm)
No.6	3.5
No.7	3.8
No.8	4
No.10	5
No.12	6

Part Number	Gauge	X	Length	Description	Box Qty.
ACET068	No.8	X	3/8" (10mm)	Pozi Flange AB	100
ACET063	No.8	X	1/2" (12mm)	Pan Head Self Tapper	100
ACET070	No.8	X	1/2" (12mm)	Pozi Flange Self Tapper S/S	100
ACUN3535	No.8	X	5/8" (16mm)	Pan Head Pozi S/S	100
ACET099	No.8	X	3/4" (20mm)	Pozi Flange Self Tapper S/S	100
ACDR050	4.8mm	X	32mm	Pan Head Pozi S/S	200
PUA028	No.10	X	1" (25mm)	Pan Head Pozi S/S	100
ACDR052	No.10	X	2" (50mm)	Pan Head Self Tapper S/S	200
ACET079	No.10	X	2 1/2" (60mm)	Pan Head Pozi S/S	100
ACW20160	No.12	X	1" (25mm)	Flange Head Self Tapper S/S	100
ACMC109	6.3mm	X	38mm	DIN7981 - Pan Head Self Tapper	200

T-BARS
ACVG65=2.5mm
ACVG66=3.0mm
ACVL150=4.0mm

Screw (Grub)

MF = Mill Finish
SA = Silver Anodised
KL = Basic Colour
HP = Special Colour
SSC = Smooth Satin Chrome
SMC = Smokey Chrome
PC = Polished Chrome
W = White
Z = Black

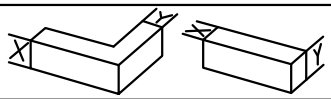

Machine Screws

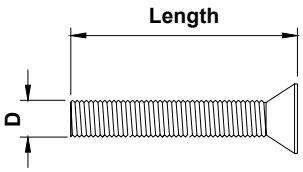

Thread	'D' (mm) Nominal
M4	4
M5	5
M6	6
M8	8
M10	10

Part Number	Thread	X	Length	Description	Box Qty.
ACET122	M4	X	10	CSK Pozi Machine Screw	100
ACET123	M4	X	20	CSK Pozi Machine Screw	100
ACDV264	M4	X	35	CSK Pozi Machine Screw	100
ACSG071	M4	X	40	CSK Pozi Machine Screw	100
ACDV266	M4	X	45	CSK Pozi Machine Screw	100
ACDV262	M4	X	50	CSK Pozi Machine Screw	100
ACDV265	M4	X	60	CSK Pozi Machine Screw	100
AAE014	M5	X	10	CSK Pozi Machine Screw	100
ACET069	M5	X	12	CSK Pozi Machine Screw	100
HEA132	M5	X	16	CSK Pozi Machine Screw	100
WCA134	M5	X	20	CSK Pozi Machine Screw	100
WCA143	M5	X	25	CSK Pozi Machine Screw	50
ACVS061	M5	X	40	CSK Pozi Machine Screw	100
ACET133	M5	X	50	CSK Pozi Machine Screw	100
ACET220	M5	X	60	CSK Pozi Machine Screw	100
ACET238	M5	X	70	CSK Pozi Machine Screw	100
ACMX861	M5	X	80	DIN965 - CSK Machine Screw	10
ACMX862	M5	X	90	DIN965 - CSK Machine Screw	10
ACUN3503	M6	X	10	CSK Socket Machine Screw	24
ACUN3525	M6	X	13	CSK Flange Socket Machine Screw	48
ACMX852	M6	X	16	DIN965 - CSK Machine Screw	10
ACET235	M6	X	60	CSK Pozi Machine Screw	100
ACET237	M6	X	70	CSK Pozi Machine Screw	100

T-BARS
ACVG65=2.5mm
ACVG66=3.0mm
ACVL150=4.0mm

Screw (Grub)

MF = Mill Finish
SA = Silver Anodised
KL = Basic Colour
HP = Special Colour
SSC = Smooth Satin Chrome
SMC = Smokey Chrome
PC = Polished Chrome
W = White
Z = Black

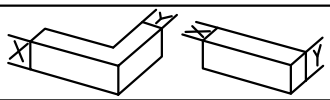

Glazing Gaskets

Retaining Gasket

Commonly known as an E Gasket.
Retaining gaskets create a seal between the Glass and the Aluminium Profile.

High Line	2mm		**ACVG231**
			200m
			BL
	3mm		**ACVG31**
			200m
			BL
	4mm		**ACVG131**
			100m
			BL
Low Line	2mm		**ACET844**
			200m
			BL
	3mm		**ACET842**
			200m
			BL
	4mm		**ACET841**
			200m
			BL
	4mm	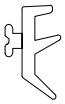	**ACET835**
			200m
			BL
	4mm		ACVG131N
			100m
			BL
	5mm		ACUN3065
			100m
			BL

Thickness	Drawing 1:1	**Part number**
		Coil length
		Available Colours

Wedge Gasket

Wedge Gaskets help to hold the bead in place by providing tension between the bead and the glazing unit.

High Line	3mm		**ACVG32**
			100m
			BL
	3mm		**ACVG32N**
			100m
			BL
	4mm		**ACVG33**
			100m
			BL
	5mm		**ACVG34**
			100m
			BL
	6mm		**ACVG340**
			100m
			BL
	6mm		**ACVG340N**
			100m
			BL
Low Line	4mm - 3mm		**ACW20038**
			200m
			BL
	5mm - 4mm		**ACET848**
			200m
			BL

Image	Part Code	Pack	Unit	Application	Colour	
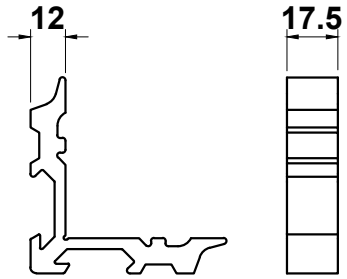	**ACDV620** **Mechanical Cleat**	**24**	**Pack**	**ETC4129**	MF	✓
					SA	
					KL	
					HP	
					SSC	
					SMC	
					W	
					Z	
					PC	
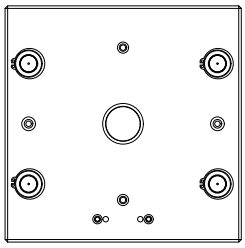	**ACDV916** **Bead Punch Tool**	**1**	**each**	**UN3160G** **UN3160**	MF	
					SA	
					KL	
					HP	
					SSC	
					SMC	
					W	
					Z	
					PC	
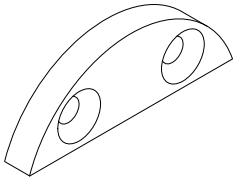	**ACET041** **Cill Nose Bracket**	**1**	**Each**	**ETC451** **ETC452** **ETC457** **ETC458** **ETC477** **ETC479**	MF	✓
					SA	
					KL	
					HP	
					SSC	
					SMC	
					W	
					Z	
					PC	
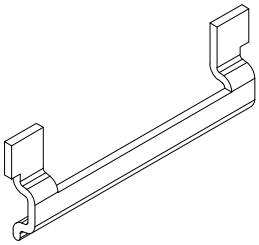	**ACET125** **Anti-Twist Clip**	**100**	**Pack**	**ETC4110** **ETC4112** **ETC4130**	MF	✓
					SA	
					KL	
					HP	
					SSC	
					SMC	
					W	
					Z	
					PC	
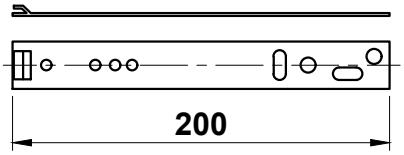	**ACET130** **Galvanised Steel Fixing Strap** **200mm x 25mm x 1.5mm**	**100**	**Pack**	**ETC4101** **ETC4105** **ETC4110** **ETC4111** **ETC4112** **ETC4113** **ETC4114** **ETC4115** **ETC4116**	MF	
					SA	
					KL	
					HP	
					SSC	
					SMC	
					W	
					Z	
					PC	

T-BARS
ACVG65=2.5mm
ACVG66=3.0mm
ACVL150=4.0mm

Screw (Grub)

MF = Mill Finish
SA = Silver Anodised
KL = Basic Colour
HP = Special Colour
SSC = Smooth Satin Chrome
SMC = Smokey Chrome
PC = Polished Chrome
W = White
Z = Black

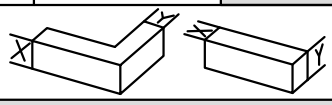

Image	Part Code	Pack	Unit	Application	Colour	
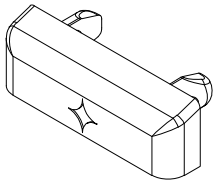	**ACET131** **Drainage Cover Cap** **For colour matched drainage caps, please order ACET432**	**100**	**Pack**	**Outer Frames, Sashes, Transoms & UN3000**	MF	
					SA	
					KL	
					HP	
					SSC	
					SMC	
					W	✓
					Z	✓
					PC	
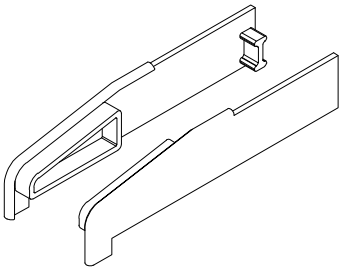	**ACET152** **Cill End Cap**	**10**	**Pair**	**ACET452**	MF	
					SA	
					KL	
					HP	
					SSC	
					SMC	
					W	✓
					Z	✓
					PC	
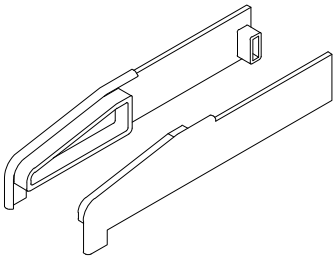	**ACET157** **Cill End Cap**	**10**	**Pair**	**ETC457**	MF	
					SA	
					KL	
					HP	
					SSC	
					SMC	
					W	✓
					Z	✓
					PC	
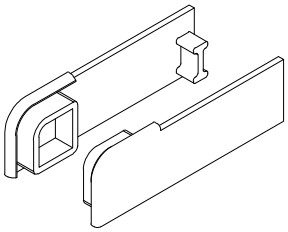	**ACET178** **Cill End Cap**	**10**	**Pair**	**ETC451**	MF	
					SA	
					KL	
					HP	
					SSC	
					SMC	
					W	✓
					Z	✓
					PC	
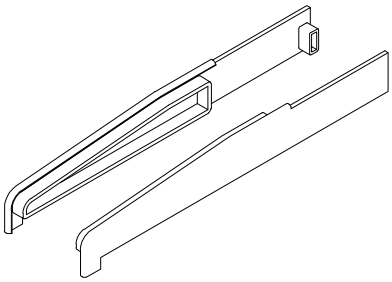	**ACET179N** **Cill End Cap**	**10**	**Pair**	**ETC479N**	MF	
					SA	
					KL	
					HP	
					SSC	
					SMC	
					W	✓
					Z	✓
					PC	

T-BARS
ACVG65=2.5mm
ACVG66=3.0mm
ACVL150=4.0mm

Screw (Grub)

MF = Mill Finish
SA = Silver Anodised
KL = Basic Colour
HP = Special Colour
SSC = Smooth Satin Chrome
SMC = Smokey Chrome
PC = Polished Chrome
W = White
Z = Black

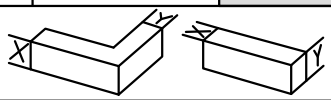

Image	Part Code	Pack	Unit	Application	Colour	
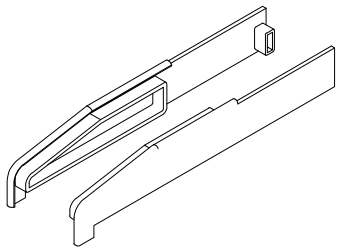	**ACET258** Cill End Cap	10	Pair	ETC458	MF	
					SA	
					KL	
					HP	
					SSC	
					SMC	
					W	✓
					Z	✓
					PC	
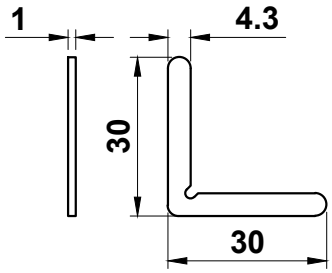	**ACET311** Stainless Steel Chevron	50	Pack	ETC4101 ETC4105 ETC4110 ETC4111 ETC4112 ETC4113 ETC4114 ETC4115 ETC4116 ETC4117 ETC4120 ETC4124 ETC4146 ETC4147	MF	
					SA	
					KL	
					HP	
					SSC	
					SMC	
					W	
					Z	
					PC	
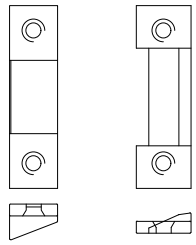	**ACET352** Pull in Block for Egress Hinges 2 x ACET394 required	50	pack	ETC4124 ETC4125	MF	
					SA	
					KL	
					HP	
					SSC	
					SMC	
					W	
					Z	
					PC	
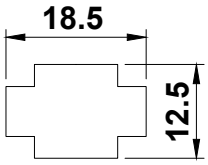	**ACET355** Foam	1	Each	ETC4430	MF	
					SA	
					KL	
					HP	
					SSC	
					SMC	
					W	
					Z	
					PC	
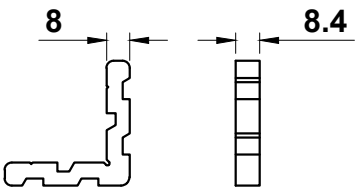	**ACET4026** Crimping Cleat	1	Each	ETC4124 ETC4125	MF	✓
					SA	
					KL	
					HP	
					SSC	
					SMC	
					W	
					Z	
					PC	

T-BARS
ACVG65=2.5mm
ACVG66=3.0mm
ACVL150=4.0mm

Screw (Grub)

MF	= Mill Finish	W	= White
SA	= Silver Anodised	Z	= Black
KL	= Basic Colour		
HP	= Special Colour		
SSC	= Smooth Satin Chrome		
SMC	= Smokey Chrome		
PC	= Polished Chrome		

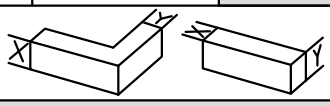

Image	Part Code	Pack	Unit	Application	Colour
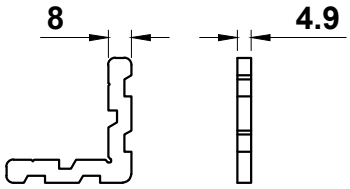	**ACET4027** **Crimping Cleat**	1	Each	ETC4124 ETC4125	MF ✓ SA KL HP SSC SMC W Z PC
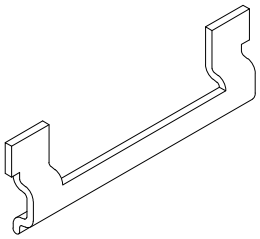	**ACET4036** **Anti-Twist Clip**	100	Pack	ETC4105 ETC4115 ETC4116 ETC4134 ETC4135 ETC4137	MF ✓ SA KL HP SSC SMC W Z PC
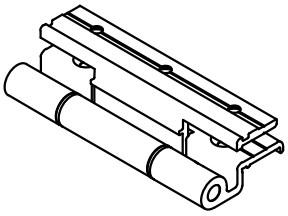	**ACET4050** **Butt Hinge**	1	Each	ETC4101 ETC4110 ETC4111 ETC4112 ETC4113 ETC4114 ETC4120 ETC4129	MF SA KL HP SSC SMC W Z PC
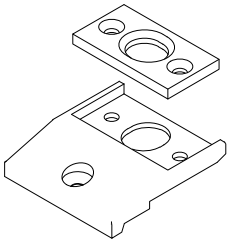	**ACET4054** **French Casement Keep Kit** **Kit Contains:** **2 x Packers** **2 x Reversible Keeps**	1	Pack	ETC4138 ACET4055 ACET4138 ACUN3055	MF SA KL HP SSC SMC W Z PC
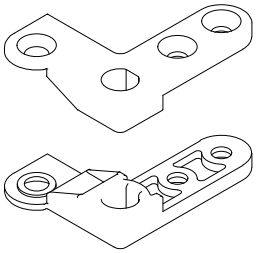	**ACET4055** **French Casement Shootbolt Guide**	1	Pair	ETC4138 ACET4054 ACET4138 ACUN3055	MF SA KL HP SSC SMC W Z ✓ PC

T-BARS
ACVG65=2.5mm
ACVG66=3.0mm
ACVL150=4.0mm

Screw (Grub)

MF = Mill Finish
SA = Silver Anodised
KL = Basic Colour
HP = Special Colour
SSC = Smooth Satin Chrome
SMC = Smokey Chrome
PC = Polished Chrome
W = White
Z = Black

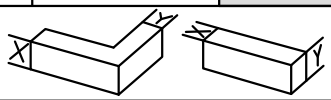

Image	Part Code	Pack	Unit	Application	Colour	
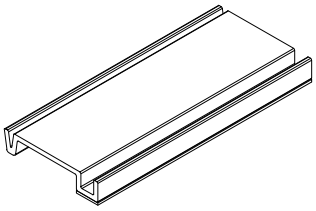	**ACET4058** **Bridge Packer**	**12**	**Pack**	**ETC4129**	MF	
					SA	
					KL	
					HP	
					SSC	
					SMC	
					W	
					Z	
					PC	
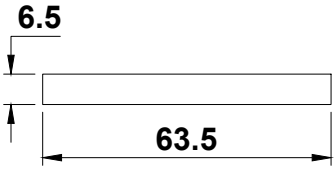	**ACET4070** **Foam**	**1**	**Each**	**ETC4105** **ETC4110** **ETC4111** **ETC4112** **ETC4113** **ETC4114** **ETC4115**	MF	
					SA	
					KL	
					HP	
					SSC	
					SMC	
					W	
					Z	✓
					PC	
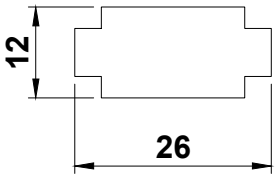	**ACET4071** **Foam**	**1**	**Each**	**ETC4101** **ETC4105** **ETC4110** **ETC4111** **ETC4112** **ETC4113** **ETC4114** **ETC4115** **ETC4116**	MF	
					SA	
					KL	
					HP	
					SSC	
					SMC	
					W	
					Z	✓
					PC	
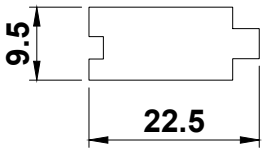	**ACET4072** **Foam**	**1**	**Each**	**ETC4120**	MF	
					SA	
					KL	
					HP	
					SSC	
					SMC	
					W	
					Z	✓
					PC	
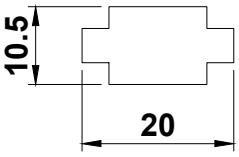	**ACET4073** **Foam**	**1**	**Each**	**ETC4129**	MF	
					SA	
					KL	
					HP	
					SSC	
					SMC	
					W	
					Z	✓
					PC	

T-BARS
ACVG65=2.5mm
ACVG66=3.0mm
ACVL150=4.0mm

Screw (Grub)

MF = Mill Finish
SA = Silver Anodised
KL = Basic Colour
HP = Special Colour
SSC = Smooth Satin Chrome
SMC = Smokey Chrome
PC = Polished Chrome
W = White
Z = Black

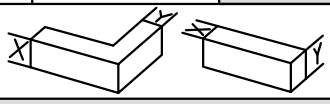

Image	Part Code	Pack	Unit	Application	Colour	
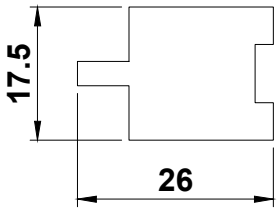	**ACET4075** Foam	1	Each	ETC4130	MF	
					SA	
					KL	
					HP	
					SSC	
					SMC	
					W	
					Z	✓
					PC	
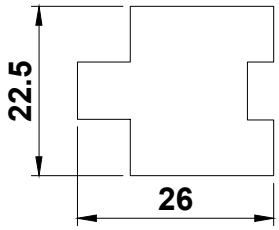	**ACET4076** Foam	1	Each	ETC4135	MF	
					SA	
					KL	
					HP	
					SSC	
					SMC	
					W	
					Z	✓
					PC	
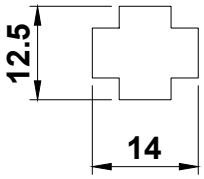	**ACET4077** Foam	1	Each	ETC4146	MF	
					SA	
					KL	
					HP	
					SSC	
					SMC	
					W	
					Z	✓
					PC	
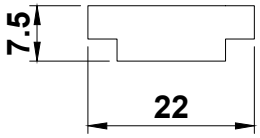	**ACET4078** Foam	1	Each	ETC4147	MF	
					SA	
					KL	
					HP	
					SSC	
					SMC	
					W	
					Z	✓
					PC	
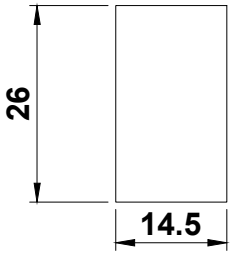	**ACET4081** Foam	150	m	ETC4129	MF	
					SA	
					KL	
					HP	
					SSC	
					SMC	
					W	
					Z	✓
					PC	

T-BARS
ACVG65=2.5mm
ACVG66=3.0mm
ACVL150=4.0mm

Screw (Grub)

MF = Mill Finish
SA = Silver Anodised
KL = Basic Colour
HP = Special Colour
SSC = Smooth Satin Chrome
SMC = Smokey Chrome
PC = Polished Chrome
W = White
Z = Black

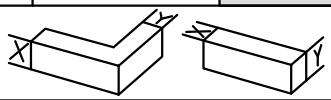

Image	Part Code	Pack	Unit	Application	Colour	
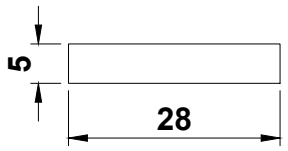	**ACET4082** Foam	200	m	ETC4110 ETC4111 ETC4112 ETC4113 ETC4115 ETC4120 ETC4130 ETC4135	MF SA KL HP SSC SMC W Z PC	 ✓
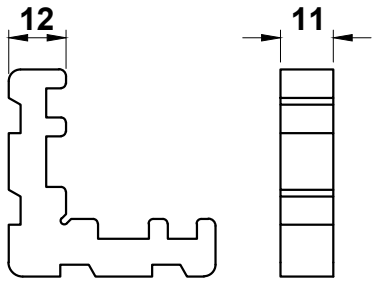	**ACET4110** Crimping Cleat	24	Pack	ETC4110 ETC4111 ETC4112 ETC4113 ETC4115	MF SA KL HP SSC SMC W Z PC	✓
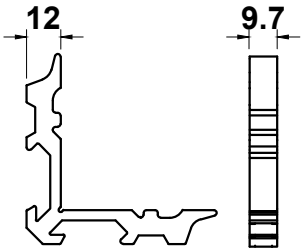	**ACET4111** Mechanical Cleat	24	Pack	ETC4110 ETC4111 ETC4112 ETC4129	MF SA KL HP SSC SMC W Z PC	✓
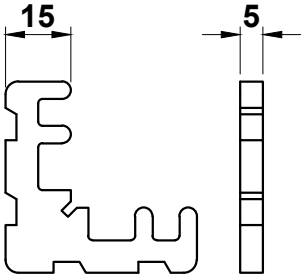	**ACET4115** Crimping Cleat	24	Pack	ETC4115	MF SA KL HP SSC SMC W Z PC	✓
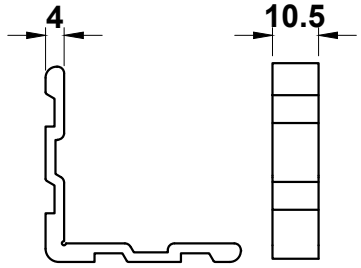	**ACET4120** Crimping Cleat	24	Pack	ETC4120	MF SA KL HP SSC SMC W Z PC	✓

T-BARS
ACVG65=2.5mm
ACVG66=3.0mm
ACVL150=4.0mm

Screw (Grub)

MF	= Mill Finish	W	= White
SA	= Silver Anodised	Z	= Black
KL	= Basic Colour		
HP	= Special Colour		
SSC	= Smooth Satin Chrome		
SMC	= Smokey Chrome		
PC	= Polished Chrome		

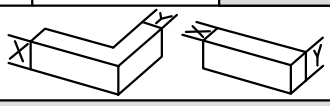

Image	Part Code	Pack	Unit	Application	Colour	
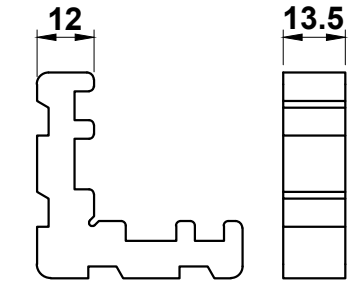	**ACET4122** **Crimping Cleat**	**24**	**Pack**	**ETC4146**	MF	✓
					SA	
					KL	
					HP	
					SSC	
					SMC	
					W	
					Z	
					PC	
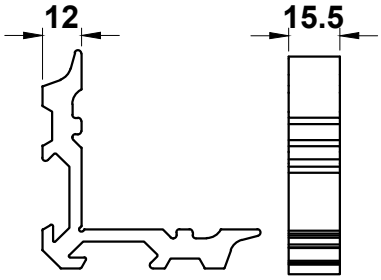	**ACET4123** **Mechanical Cleat**	**24**	**Pack**	**ETC4146**	MF	✓
					SA	
					KL	
					HP	
					SSC	
					SMC	
					W	
					Z	
					PC	
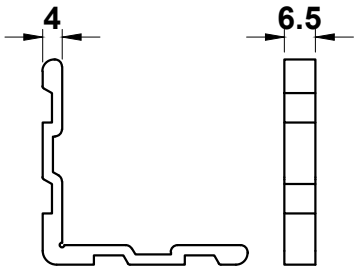	**ACET4124** **Crimping Cleat**	**24**	**Pack**	**ETC4147**	MF	✓
					SA	
					KL	
					HP	
					SSC	
					SMC	
					W	
					Z	
					PC	
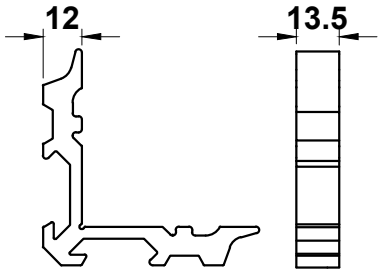	**ACET4125** **Mechanical Cleat**	**24**	**Pack**	**ETC4146**	MF	✓
					SA	
					KL	
					HP	
					SSC	
					SMC	
					W	
					Z	
					PC	
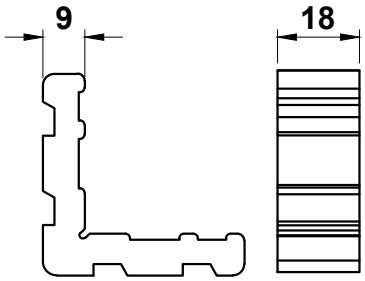	**ACET4127** **Crimping Cleat**	**24**	**Pack**	**ETC4147**	MF	✓
					SA	
					KL	
					HP	
					SSC	
					SMC	
					W	
					Z	
					PC	

T-BARS
ACVG65=2.5mm
ACVG66=3.0mm
ACVL150=4.0mm

Screw (Grub)

MF = Mill Finish
SA = Silver Anodised
KL = Basic Colour
HP = Special Colour
SSC = Smooth Satin Chrome
SMC = Smokey Chrome
PC = Polished Chrome
W = White
Z = Black

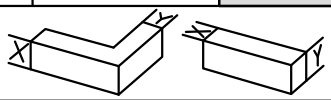

Image	Part Code	Pack	Unit	Application	Colour	
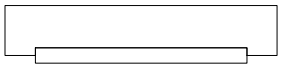	**ACET4128** **Adhesive Packer**	**12**	**Pack**	**ETC4147**	MF	✓
					SA	
					KL	
					HP	
					SSC	
					SMC	
					W	
					Z	
					PC	
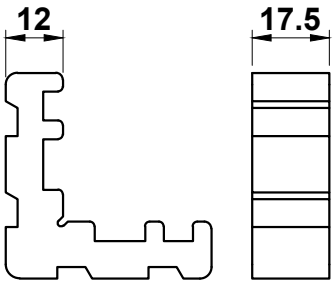	**ACET4129** **Crimping Cleat**	**24**	**Pack**	**ETC4129**	MF	✓
					SA	
					KL	
					HP	
					SSC	
					SMC	
					W	
					Z	
					PC	
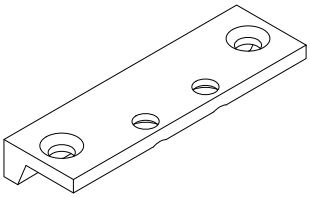	**ACET4130** **Cruciform Block**	**10**	**Pack**	**ETC4130**	MF	✓
					SA	
					KL	
					HP	
					SSC	
					SMC	
					W	
					Z	
					PC	
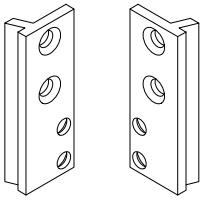	**ACET4131** **Offset Cruciform Block**	**10**	**Pairs**	**ETC4130**	MF	✓
					SA	
					KL	
					HP	
					SSC	
					SMC	
					W	
					Z	
					PC	
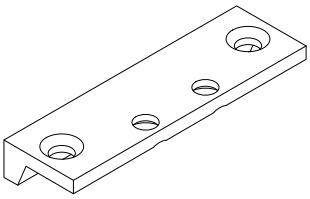	**ACET4135** **Cruciform Block**	**10**	**Pack**	**ETC4135**	MF	✓
					SA	
					KL	
					HP	
					SSC	
					SMC	
					W	
					Z	
					PC	

T-BARS
ACVG65=2.5mm
ACVG66=3.0mm
ACVL150=4.0mm

Screw (Grub)

MF = Mill Finish
SA = Silver Anodised
KL = Basic Colour
HP = Special Colour
SSC = Smooth Satin Chrome
SMC = Smokey Chrome
PC = Polished Chrome
W = White
Z = Black

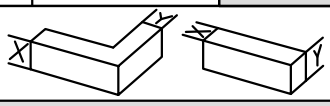

Image	Part Code	Pack	Unit	Application	Colour	
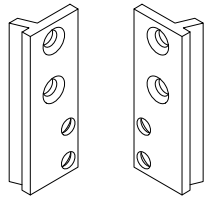	**ACET4136** **Offset Cruciform Block**	**10**	**Pairs**	**ETC4135**	MF SA KL HP SSC SMC W Z PC	
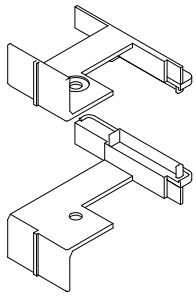	**ACET4138** **End Cap**	**1**	**Pair**	**ETC4138** **ACET4054** **ACET4055** **ACUN3050**	MF SA KL HP SSC SMC W Z PC	 ✓ ✓
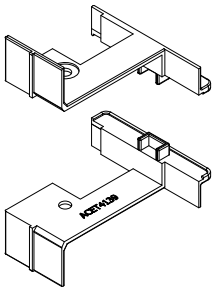	**ACET4139** **End Cap**	**1**	**Pair**	**ETC4139**	MF SA KL HP SSC SMC W Z PC	 ✓ ✓
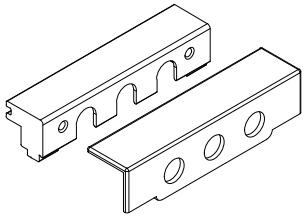	**ACET4165** **Cast Handle Block**	**1**	**each**	**ETC4124** **UN3160/G**	MF SA KL HP SSC SMC W Z PC	✓ ✓ ✓ ✓ ✓
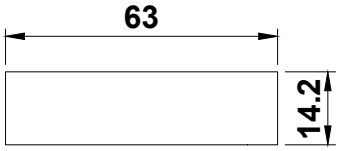	**ACET4170** **Foam**	**1**	**Each**	**ETC4111** **ETC4116**	MF SA KL HP SSC SMC W Z PC	 ✓

T-BARS
ACVG65=2.5mm
ACVG66=3.0mm
ACVL150=4.0mm

Screw (Grub)

MF = Mill Finish
SA = Silver Anodised
KL = Basic Colour
HP = Special Colour
SSC = Smooth Satin Chrome
SMC = Smokey Chrome
PC = Polished Chrome
W = White
Z = Black

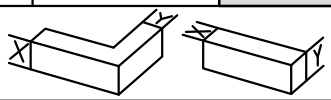

Image	Part Code	Pack	Unit	Application	Colour	
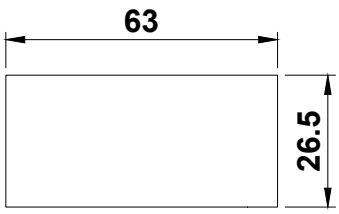	**ACET4171** **Foam**	1	Each	ETC4101	MF SA KL HP SSC SMC W Z PC	 ✓
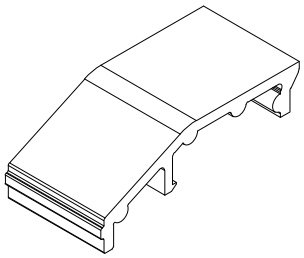	**ACET4180** **Run-Up Block**	100	Pack	Outer Frames & Transoms/ Mullions	MF SA KL HP SSC SMC W Z PC	 ✓ ✓
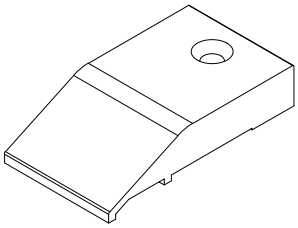	**ACET4181** **Run-Up Block**	100	Pack	ETC4146	MF SA KL HP SSC SMC W Z PC	 ✓ ✓
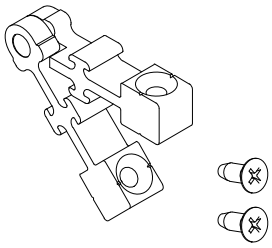	**ACET4200** **Variable Angle Cleat with screws**	24	Pack	ETC4110 ETC4111 ETC4112 ETC4113	MF SA KL HP SSC SMC W Z PC	✓
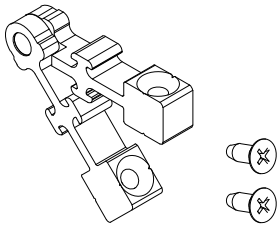	**ACET4201** **Variable Angle Cleat with screws**	24	Pack	ETC4110 ETC4111 ETC4112 ETC4113	MF SA KL HP SSC SMC W Z PC	✓

T-BARS
ACVG65=2.5mm
ACVG66=3.0mm
ACVL150=4.0mm

Screw (Grub)

MF	= Mill Finish	W	= White
SA	= Silver Anodised	Z	= Black
KL	= Basic Colour		
HP	= Special Colour		
SSC	= Smooth Satin Chrome		
SMC	= Smokey Chrome		
PC	= Polished Chrome		

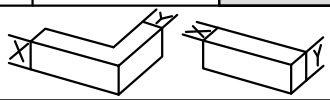

Image	Part Code	Pack	Unit	Application	Colour
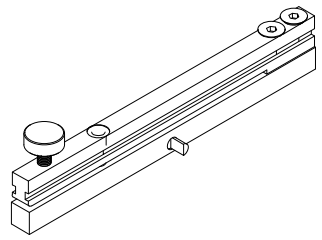	**ACET4208** **Jig for Variable Angle Cleat for ACET4200**	1	Each	ETC4110 ETC4111 ETC4112 ETC4113	MF ✓ SA KL HP SSC SMC W Z PC
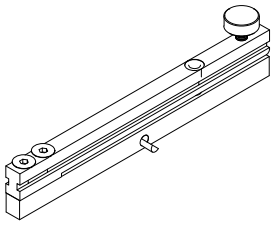	**ACET4209** **Jig for Variable Angle Cleat for ACET4201**	1	Each	ETC4110 ETC4111 ETC4112 ETC4113	MF ✓ SA KL HP SSC SMC W Z PC
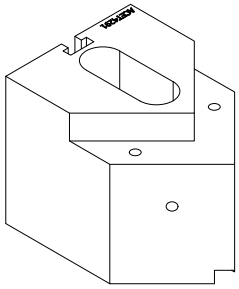	**ACET4291N** **Vee Block**	1	Each	ETC4110 ETC4112 ETC4115 ETC4120 ETC4146 ETC4147	MF ✓ SA KL HP SSC SMC W Z PC
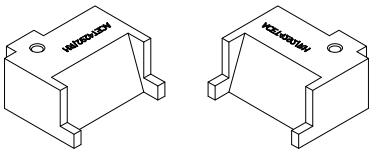	**ACET4292** **Punches**	1	Pair	ETC4110 ETC4111 ETC4112 ETC4113	MF ✓ SA KL HP SSC SMC W Z PC
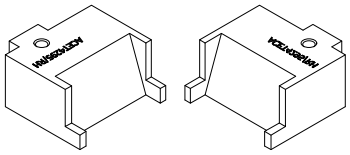	**ACET4295** **Punches**	1	Pair	ETC4115 ETC4120	MF ✓ SA KL HP SSC SMC W Z PC

T-BARS
ACVG65=2.5mm
ACVG66=3.0mm
ACVL150=4.0mm

Screw (Grub)

MF = Mill Finish
SA = Silver Anodised
KL = Basic Colour
HP = Special Colour
SSC = Smooth Satin Chrome
SMC = Smokey Chrome
PC = Polished Chrome
W = White
Z = Black

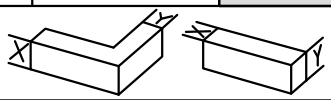

Image	Part Code	Pack	Unit	Application	Colour	
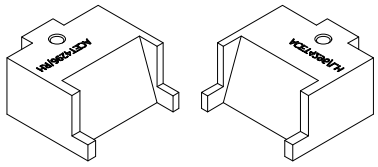	**ACET4296** **Punches**	**1**	**Pair**	**ETC4129** **ETC4146** **ETC4147**	MF	✓
					SA	
					KL	
					HP	
					SSC	
					SMC	
					W	
					Z	
					PC	
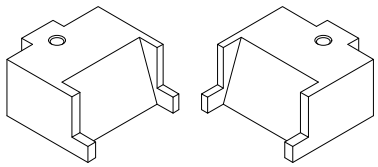	**ACET4298** **Punches**	**1**	**Pair**	**ETC4124** **ETC4125**	MF	✓
					SA	
					KL	
					HP	
					SSC	
					SMC	
					W	
					Z	
					PC	
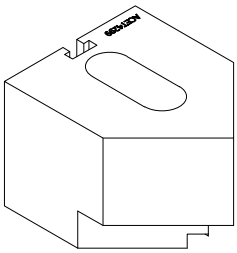	**ACET4299** **Vee Block**	**1**	**Each**	**ETC4129**	MF	✓
					SA	
					KL	
					HP	
					SSC	
					SMC	
					W	
					Z	
					PC	
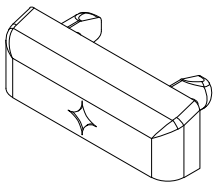	**ACET432** **Drainage Cover Cap (Colour Match)**	**10**	**Pack**	**Outer Frames, Sashes, Transoms & UN3000**	MF	
					SA	
					KL	✓
					HP	✓
					SSC	
					SMC	
					W	✓
					Z	✓
					PC	
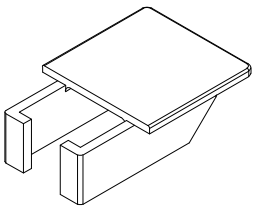	**ACET4330** **ETC4330 End Cap**	**50**	**Pack**	**ETC4330**	MF	✓
					SA	
					KL	
					HP	
					SSC	
					SMC	
					W	
					Z	
					PC	

T-BARS
ACVG65=2.5mm
ACVG66=3.0mm
ACVL150=4.0mm

Screw (Grub)

MF = Mill Finish
SA = Silver Anodised
KL = Basic Colour
HP = Special Colour
SSC = Smooth Satin Chrome
SMC = Smokey Chrome
PC = Polished Chrome
W = White
Z = Black

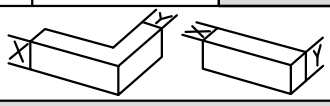

Image	Part Code	Pack	Unit	Application	Colour	
	**ACET4380** **8mm Crimping Support**	**1**	**Each**	**ACET4382** **ACET4383** **ACET4384**	MF	✓
					SA	
					KL	
					HP	
					SSC	
					SMC	
					W	
					Z	
					PC	
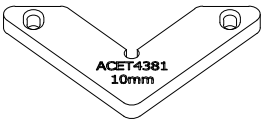	**ACET4381** **10mm Crimping Support**	**1**	**Each**	**ACET4382** **ACET4383** **ACET4384**	MF	✓
					SA	
					KL	
					HP	
					SSC	
					SMC	
					W	
					Z	
					PC	
	**ACET4382** **14.5mm Crimping Support**	**1**	**Each**	**ETC4115G** **ETC4116G**	MF	✓
					SA	
					KL	
					HP	
					SSC	
					SMC	
					W	
					Z	
					PC	
	**ACET4383** **22.5mm Crimping Support**	**1**	**Each**	**ETC4110G** **ETC4111G** **ETC4112G** **ETC4124G** **ETC4125G** **ETC4129G**	MF	✓
					SA	
					KL	
					HP	
					SSC	
					SMC	
					W	
					Z	
					PC	
	**ACET4384** **25.5mm Crimping Support**	**1**	**Each**	**ETC4120G**	MF	✓
					SA	
					KL	
					HP	
					SSC	
					SMC	
					W	
					Z	
					PC	

T-BARS
ACVG65=2.5mm
ACVG66=3.0mm
ACVL150=4.0mm

Screw (Grub)

MF = Mill Finish
SA = Silver Anodised
KL = Basic Colour
HP = Special Colour
SSC = Smooth Satin Chrome
SMC = Smokey Chrome
PC = Polished Chrome
W = White
Z = Black

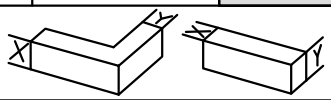

Image	Part Code	Pack	Unit	Application	Colour	
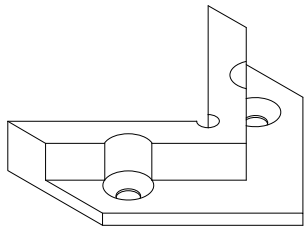	**ACET4397** **3mm Vee Block Packer**	1	Each	ETC4124	MF	✓
					SA	
					KL	
					HP	
					SSC	
					SMC	
					W	
					Z	
					PC	
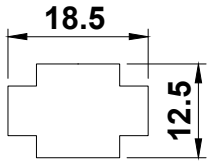	**ACET4476** **Foam**	1	Each	ETC4446	MF	
					SA	
					KL	
					HP	
					SSC	
					SMC	
					W	
					Z	
					PC	
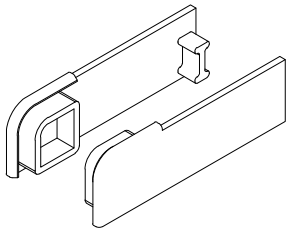	**ACET451** **Cill End Cap**	1	Pair	ETC451	MF	✓
					SA	
					KL	✓
					HP	✓
					SSC	
					SMC	
					W	✓
					Z	✓
					PC	
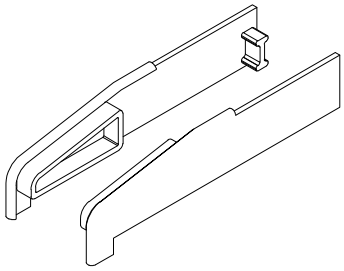	**ACET452** **Cill End Cap**	1	Pair	ETC452	MF	✓
					SA	
					KL	✓
					HP	✓
					SSC	
					SMC	
					W	✓
					Z	✓
					PC	
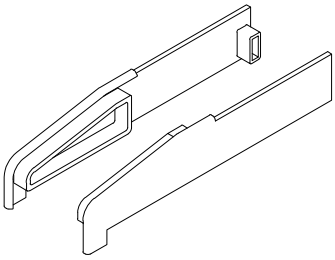	**ACET457** **Cill End Cap**	1	Pair	ETC457	MF	✓
					SA	
					KL	✓
					HP	✓
					SSC	
					SMC	
					W	✓
					Z	✓
					PC	

T-BARS
ACVG65=2.5mm
ACVG66=3.0mm
ACVL150=4.0mm

Screw (Grub)

MF = Mill Finish
SA = Silver Anodised
KL = Basic Colour
HP = Special Colour
SSC = Smooth Satin Chrome
SMC = Smokey Chrome
PC = Polished Chrome
W = White
Z = Black

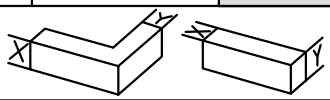

Image	Part Code	Pack	Unit	Application	Colour	
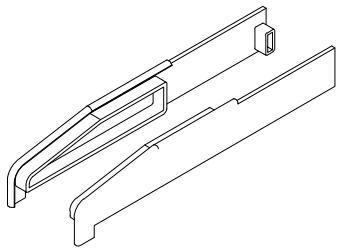	**ACET458** **Cill End Cap**	**1**	**Pair**	**ETC458**	MF	✓
					SA	
					KL	✓
					HP	✓
					SSC	
					SMC	
					W	✓
					Z	✓
					PC	
	**ACET460** **Inline Espag Handle with 9mm Spindle**	**1**	**Each**	**ACET4001 to AET4006**	MF	
					SA	
					KL	✓
					HP	✓
					SSC	✓
					SMC	✓
					W	✓
					Z	✓
					PC	✓
	**ACET465** **Cranked Espag Handle with 9mm Spindle**	**1**	**Each**	**ACET4001 to AET4006**	MF	
					SA	
					KL	✓
					HP	✓
					SSC	✓
					SMC	✓
					W	✓
					Z	✓
					PC	✓
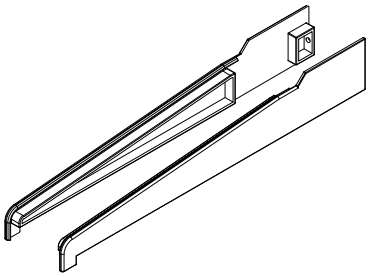	**ACET477** **Cill End Cap**	**1**	**Pair**	**ETC477**	MF	✓
					SA	
					KL	✓
					HP	✓
					SSC	
					SMC	
					W	✓
					Z	✓
					PC	
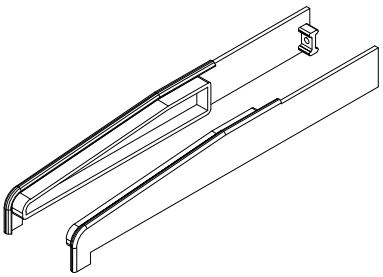	**ACET479N** **Cill End Cap**	**1**	**Pair**	**ETC479N**	MF	✓
					SA	
					KL	✓
					HP	✓
					SSC	
					SMC	
					W	✓
					Z	✓
					PC	

T-BARS
ACVG65=2.5mm
ACVG66=3.0mm
ACVL150=4.0mm

Screw (Grub)

MF = Mill Finish
SA = Silver Anodised
KL = Basic Colour
HP = Special Colour
SSC = Smooth Satin Chrome
SMC = Smokey Chrome
PC = Polished Chrome
W = White
Z = Black

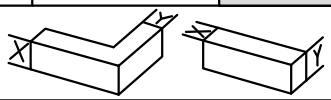

Image	Part Code	Pack	Unit	Application	Colour	
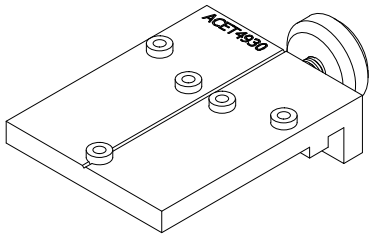	**ACET4930** **Drill Jig**	**1**	**Pair**	**ACET4130** **ETC4130**	MF	✓
					SA	
					KL	
					HP	
					SSC	
					SMC	
					W	
					Z	
					PC	
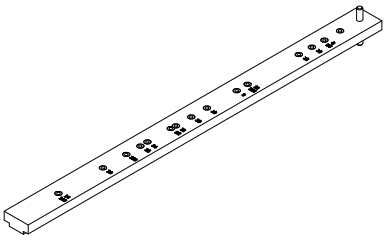	**ACET4904** **Drill Jig**	**1**	**Eack**	**ACETME16**	MF	✓
					SA	
					KL	
					HP	
					SSC	
					SMC	
					W	
					Z	
					PC	
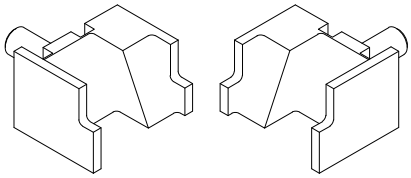	**ACET4917** **Punches**	**1**	**Pair**	**ETC4117**	MF	
					SA	
					KL	
					HP	
					SSC	
					SMC	
					W	
					Z	
					PC	
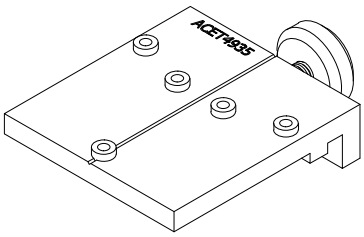	**ACET4935** **Drill Jig**	**1**	**Pair**	**ACET4135** **ETC4135**	MF	✓
					SA	
					KL	
					HP	
					SSC	
					SMC	
					W	
					Z	
					PC	
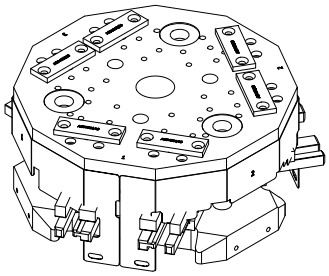	**ACET4950** **Punch Tool**	**1**	**Each**	**ETC4110** **ETC4111** **ETC4112** **ETC4113** **ETC4129** **ETC4146**	MF	
					SA	
					KL	
					HP	
					SSC	
					SMC	
					W	
					Z	
					PC	

T-BARS
ACVG65=2.5mm
ACVG66=3.0mm
ACVL150=4.0mm

Screw (Grub)

MF = Mill Finish
SA = Silver Anodised
KL = Basic Colour
HP = Special Colour
SSC = Smooth Satin Chrome
SMC = Smokey Chrome
PC = Polished Chrome
W = White
Z = Black

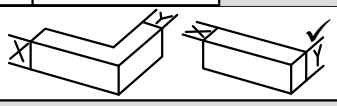

Image	Part Code	Pack	Unit	Application	Colour
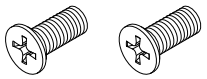	**ACET495** **Handle Fixing Kit** **1 Pack Contains:** **2No. 5 x 12 SS CSK Machine Screws**	**1**	**Pack**	**ACET460** **ACET465**	MF SA KL HP SSC SMC W Z PC
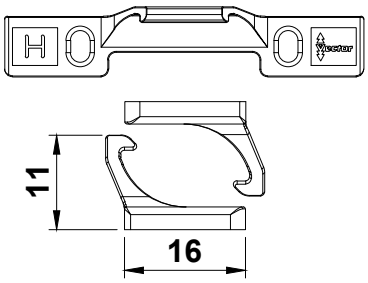	**ACET513** **13mm Cavity Hinge Protector** **4 Per Set (2 pairs)**	**50**	**Sets**	**ETC4124** **ETC4125**	MF ✓ SA KL HP SSC SMC W Z PC
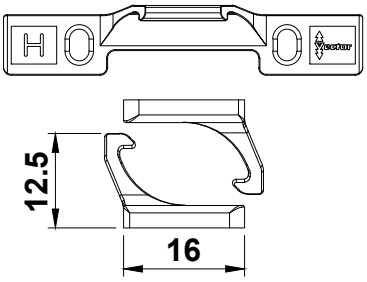	**ACET516** **16mm Cavity Hinge Protector** **4 Per Set (2 pairs)**	**50**	**Sets**	**ETC4120** **ETC4129**	MF ✓ SA KL HP SSC SMC W Z PC
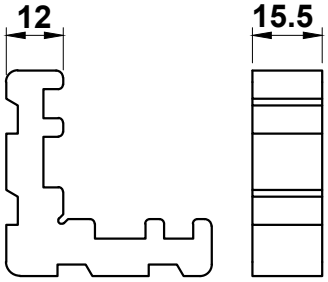	**ACET615** **Crimping Cleat**	**24**	**Pack**	**ETC4146**	MF ✓ SA KL HP SSC SMC W Z PC
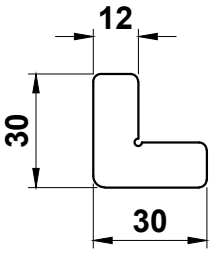	**ACET624** **Stainless Steel Chevron**	**100**	**Pack**	**ETC4120** **ETC4129**	MF SA KL HP SSC SMC W Z PC

T-BARS
ACVG65=2.5mm
ACVG66=3.0mm
ACVL150=4.0mm

Screw (Grub)

MF = Mill Finish
SA = Silver Anodised
KL = Basic Colour
HP = Special Colour
SSC = Smooth Satin Chrome
SMC = Smokey Chrome
PC = Polished Chrome
W = White
Z = Black

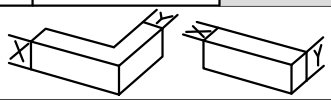

Image	Part Code	Pack	Unit	Application	Colour	
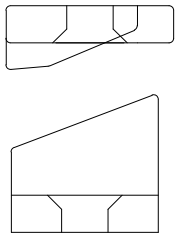	**ACET652** **Pull-In Blocks**	**50**	**Pack**	**ETC4120** **ETC4129**	MF SA KL HP SSC SMC W Z PC	 ✓ ✓
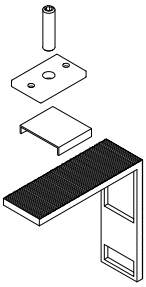	**ACET695** **Glass Adjuster Kit** **Kit Includes:** **1 x Adjusting Screw** **1 x Threaded Block** **1 x Steel Cover** **1 x ABS Corner**	**1**	**Kit**	**ETC4129**	MF SA KL HP SSC SMC W Z PC	
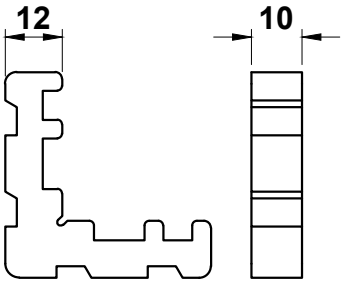	**ACET820** **Crimping Cleat**	**24**	**Pack**	**ETC4110** **ETC4111** **ETC4112** **ETC4113** **ETC4120** **ETC4129**	MF SA KL HP SSC SMC W Z PC	✓
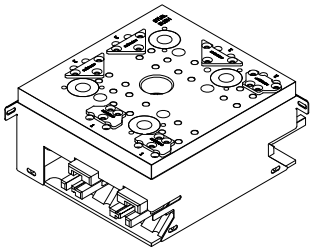	**ACET963R** **Punch Tool**	**1**	**Each**	**ETC4110** **ETC4111** **ETC4112** **ETC4113** **ETC4129** **ETC4146**	MF SA KL HP SSC SMC W Z PC	
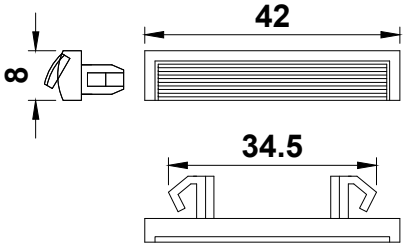	**ACGSL045** **Drainage Cap**	**100**	**Pack**		MF SA KL HP SSC SMC W Z PC	 ✓ ✓

T-BARS
ACVG65=2.5mm
ACVG66=3.0mm
ACVL150=4.0mm

Screw (Grub)

MF = Mill Finish
SA = Silver Anodised
KL = Basic Colour
HP = Special Colour
SSC = Smooth Satin Chrome
SMC = Smokey Chrome
PC = Polished Chrome
W = White
Z = Black

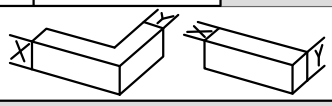

Image	Part Code	Pack	Unit	Application	Colour	
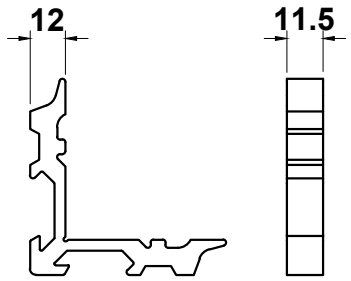	**ACSL013B** **Mechanical Cleat**	**24**	**Pack**	**ETC4110** **ETC4111** **ETC4112** **ETC4115**	MF	✓
					SA	
					KL	
					HP	
					SSC	
					SMC	
					W	
					Z	
					PC	
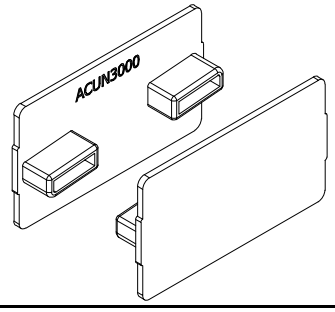	**ACUN3000** **End Caps for UN3000**	**10**	**Pairs**	**UN3000**	MF	
					SA	
					KL	
					HP	
					SSC	
					SMC	
					W	
					Z	✓
					PC	
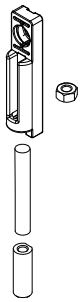	**ACUN3055** **French Casement Shootbolt** **Kit Includes:** **2 x Cam connectors** **2 x 180mm SS threaded bar** **2 x Stainless Steel Shootbolt** **2 x M8 Nuts**	**1**	**Kit**	**ETC4138** **ACET4054** **ACET4055** **ACET4138**	MF	
					SA	
					KL	
					HP	
					SSC	
					SMC	
					W	
					Z	
					PC	
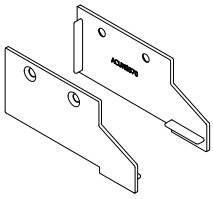	**ACUN3570** **UN3570 End Caps**	**1**	**Pair**	**UN3570**	MF	
					SA	
					KL	
					HP	
					SSC	
					SMC	
					W	✓
					Z	✓
					PC	
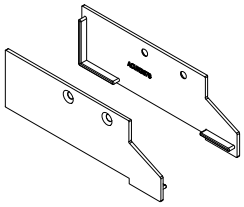	**ACUN3578** **UN3577 End Caps**	**1**	**Pair**	**UN3577**	MF	
					SA	
					KL	
					HP	
					SSC	
					SMC	
					W	✓
					Z	✓
					PC	

T-BARS
ACVG65=2.5mm
ACVG66=3.0mm
ACVL150=4.0mm

Screw (Grub)

MF = Mill Finish
SA = Silver Anodised
KL = Basic Colour
HP = Special Colour
SSC = Smooth Satin Chrome
SMC = Smokey Chrome
PC = Polished Chrome
W = White
Z = Black

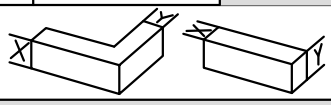

Image	Part Code	Pack	Unit	Application	Colour
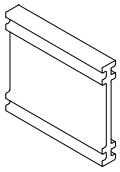	**ACUN3701** **Anti-Crush Support**	**25**	**Pack**	**UN3570**	MF SA KL HP SSC SMC W Z PC
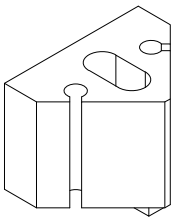	**ACUN3950** **Vee Block**	**1**	**Each**	**ACUN3951** **ACUN3952** **ACUN3953** **'G' Profiles**	MF SA KL HP SSC SMC W Z PC
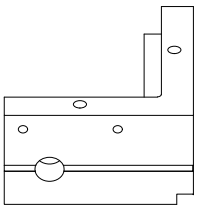	**ACUN3951** **ACUN3950 Faceplate**	**1**	**Each**	**ACUN3950** **ACUN3952** **'G' Profiles** **(not ETC4129)**	MF SA KL HP SSC SMC W Z PC
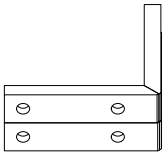	**ACUN3952** **ACUN3950 Nylon Support**	**1**	**Pair**	**ACUN3950** **ACUN3951** **ACUN3953** **'G' Profiles**	MF SA KL HP SSC SMC W Z PC
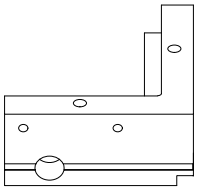	**ACUN3953** **ACUN3950 Faceplate**	**1**	**Each**	**ACUN3950** **ACUN3952** **ACUN3953** **ETC4129G**	MF SA KL HP SSC SMC W Z PC

T-BARS
ACVG65=2.5mm
ACVG66=3.0mm
ACVL150=4.0mm

Screw (Grub)

MF	**= Mill Finish**	**W**	**= White**
SA	**= Silver Anodised**	**Z**	**= Black**
KL	**= Basic Colour**		
HP	**= Special Colour**		
SSC	**= Smooth Satin Chrome**		
SMC	**= Smokey Chrome**		
PC	**= Polished Chrome**		

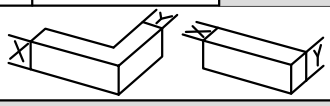

Image	Part Code	Pack	Unit	Application	Colour	
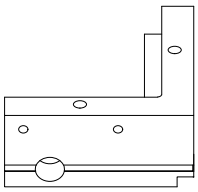	**ACUN3957** **Adjustable Vee Block**	**1**	**Each**	**ACUN3950** **ACUN3958** **ETC4120G** **ETC4124G** **ETC4125G** **'G' Profiles**	MF SA KL HP SSC SMC W Z PC	
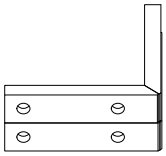	**ACUN3958** **ACUN3950 Nylon Packer**	**1**	**Pair**	**ACUN3950** **ACUN3957** **ETC4124G** **ETC4125G**	MF SA KL HP SSC SMC W Z PC	
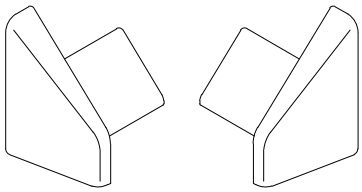	**ACVL059** **End Cap**	**1**	**Pair**	**VL72**	MF SA KL HP SSC SMC W Z PC	 ✓ ✓
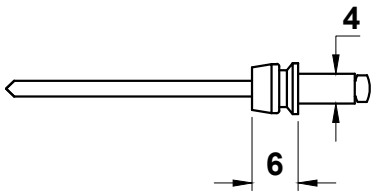	**ACVL061** **Rivet**	**100**	**Pack**	**VL72**	MF SA KL HP SSC SMC W Z PC	✓
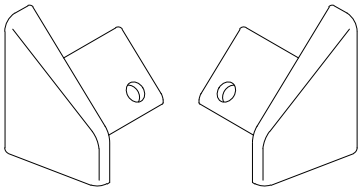	**ACVL072** **Cast End Cap**	**1**	**Pair**	**VL72**	MF SA KL HP SSC SMC W Z PC	✓ ✓ ✓ ✓ ✓

T-BARS
ACVG65=2.5mm
ACVG66=3.0mm
ACVL150=4.0mm

Screw (Grub)

MF = Mill Finish
SA = Silver Anodised
KL = Basic Colour
HP = Special Colour
SSC = Smooth Satin Chrome
SMC = Smokey Chrome
PC = Polished Chrome
W = White
Z = Black

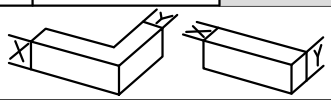

Image	Part Code	Pack	Unit	Application	Colour	
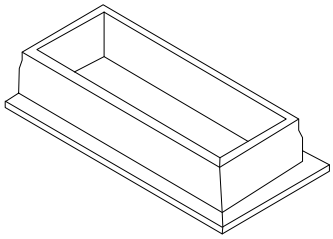	**ACVL635** **PVC End Cap**	**1**	**each**	**ETC4136**	MF	
					SA	
					KL	
					HP	
					SSC	
					SMC	
					W	
					Z	✓
					PC	
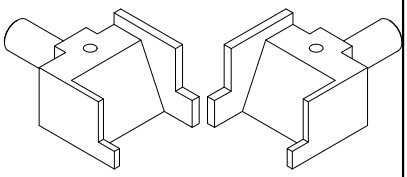	**ACW909** **Punches**	**1**	**Pair**	**ETC4124**	MF	
					SA	
					KL	
					HP	
					SSC	
					SMC	
					W	
					Z	
					PC	
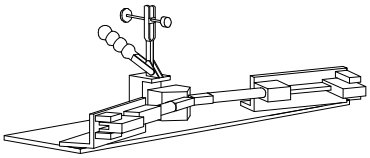	**WUT024HSZA** **Manual Crimper** **Note: Vee Blocks & Punches are Sold Separately**	**1**	**Each**		MF	
					SA	
					KL	
					HP	
					SSC	
					SMC	
					W	
					Z	
					PC	
					MF	
					SA	
					KL	
					HP	
					SSC	
					SMC	
					W	
					Z	
					PC	
					MF	
					SA	
					KL	
					HP	
					SSC	
					SMC	
					W	
					Z	
					PC	

T-BARS
ACVG65=2.5mm
ACVG66=3.0mm
ACVL150=4.0mm

Screw (Grub)

MF = Mill Finish
SA = Silver Anodised
KL = Basic Colour
HP = Special Colour
SSC = Smooth Satin Chrome
SMC = Smokey Chrome
PC = Polished Chrome
W = White
Z = Black

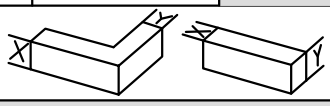

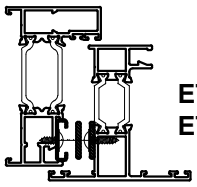

ETC4120
ETC4129

Friction Hinge Stays 16mm Stack (Standard)

Top Hung Windows

Top Hung	Type of Hinge / Stay	Max. Vent Weight (kgs)	Height Mimimum	Height Maximum	Opening Angle (+/- 2.5°)
ACETDHS08	Standard	12	200	350	65°
ACETDHS10		16	275	400	80°
ACETDHS12		20	350	550	80°
ACETDHS16		21	500	780	80°
ACETDHS20		26	700	1100	50°
ACETDHS24		40	850	1300	37.5°
ACETDTH24	Heavy Duty	50	850	1500	32°
ACETDHS12R	Restricted	20	350	550	14° / 65°
ACETDHS16R		21	500	780	10° / 59°
ACETDHS20R		26	700	1100	8° / 50°
ACETDHS24R		40	850	1300	7° / 37.5°

Side Hung Windows

Side Hung	Type of Hinge / Stay	Max. Vent Weight (kgs)	Width ('A') Minimum	Width ('A') Maximum	Opening Angle (+/- 2.5°)
ACETDHSSH12	Standard	22	300	600	60°
ACETDHSSH16		24	400	600	60°
ACETSH1612L ACETSH1612R	Restricted Left Hand R/H Non-Restricted Right Hand L/H Non-Restricted VIEWED FROM OUTSIDE L/H Restricted R/H Restricted	22	300	600	13°/58°
ACETSH1616L ACETSH1616R		24	400	600	11°/58°
ACETME16	Egress *use with ACET652 pull in blocks	40	365	865	90°
ACETDSH16	Heavy Duty	40	400	1000	60°

Note1: Vent Height / Width is measured in mm from rebate to rebate (not overall size or outer frame)
Note2: Top hung height and side hung width sizes to be reduced by 2mm where size is 450mm or smaller
Note3: Typical Dimensions based on Max. Size and Glass 30kg/metre
Note4: For additional security use ACET516 hinge protectors
Note5: Kitemark specification covers Top Hung Max. height up to 1400mm.
Note6: For sashes over 600mm, ACETME99 is recommended for ACETME16 to disable easy clean function

T-BARS
ACVG65=2.5mm
ACVG66=3.0mm
ACVL150=4.0mm

Screw (Grub)

MF	= Mill Finish	W	= White
SA	= Silver Anodised	Z	= Black
KL	= Basic Colour		
HP	= Special Colour		
SSC	= Smooth Satin Chrome		
SMC	= Smokey Chrome		
PC	= Polished Chrome		

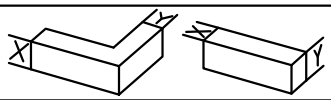

13mm Stack Friction Hinge Stays

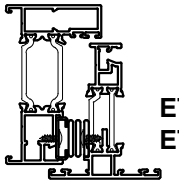

ETC4124
ETC4125

Friction Hinge Stays 13mm Stack (Standard)

Top Hung Windows

Top Hung	Type of Hinge / Stay	Max. Vent Weight (kgs)	Height ('A') Minimum	Height ('A') Maximum	Opening Angle (+/- 2.5°)
ACINDS10	Standard	16	275	400	80°
ACINDS16		21	400	780	80°
ACINDS20		26	700	1100	50°
ACINDS24		40	850	1300	37.5°
ACINDP24	Heavy Duty	50	850	1500	32°
ACINDA10	Austenitic	16	275	400	80°
ACINDA16		21	400	780	80°
ACINDA20		26	700	1100	50°
ACINDA24		40	850	1300	37.5°
ACINDR12	Restricted	20	350	550	14°/65°
ACINDR16		21	500	780	10°/59°
ACINDR20		26	700	1100	8°/50°
ACINDR24		40	850	1300	7°/37.5°

Side Hung Windows

Side Hung	Type of Hinge / Stay	Max. Vent Weight (kgs)	Width ('A') Minimum	Width ('A') Maximum	Opening Angle (+/- 2.5°)
ACINDSSH12	Standard	22	300	600	60°
ACINDSSH16		24	400	600	60°
ACINDASH12	Austenitic	22	300	600	60°
ACINDASH16		24	400	600	60°
ACETSH1312L ACETSH1312R	Restricted Left Hand R/H Non-Restricted Right Hand L/H Non-Restricted VIEWED FROM OUTSIDE L/H Restricted R/H Restricted	22	300	600	13°/58°
ACETSH1316L ACETSH1316R		24	400	600	11°/58°
ACETME13	Egress *use with ACET352 pull in blocks	40	365	865	90°

Note1: Vent Height / Width is measured in mm from rebate to rebate (not overall size or outer frame)
Note2: Top hung height and side hung width sizes to be reduced by 2mm where size is 450mm or smaller
Note3: Typical Dimensions based on Max. Size and Glass 30kg/metre
Note4: For additional security use ACET513 hinge protectors
Note5: Kitemark specification covers Top Hung Max. height up to 1400mm. ACINDP24 Max. height is 1500mm
Note6: For sashes over 600mm, ACETME99 is recommended for ACETME13 to disable easy clean function

T-BARS
ACVG65=2.5mm
ACVG66=3.0mm
ACVL150=4.0mm

Screw (Grub)

MF	= Mill Finish	W	= White
SA	= Silver Anodised	Z	= Black
KL	= Basic Colour		
HP	= Special Colour		
SSC	= Smooth Satin Chrome		
SMC	= Smokey Chrome		
PC	= Polished Chrome		

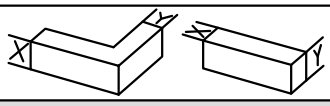

Reverse Espag Locking

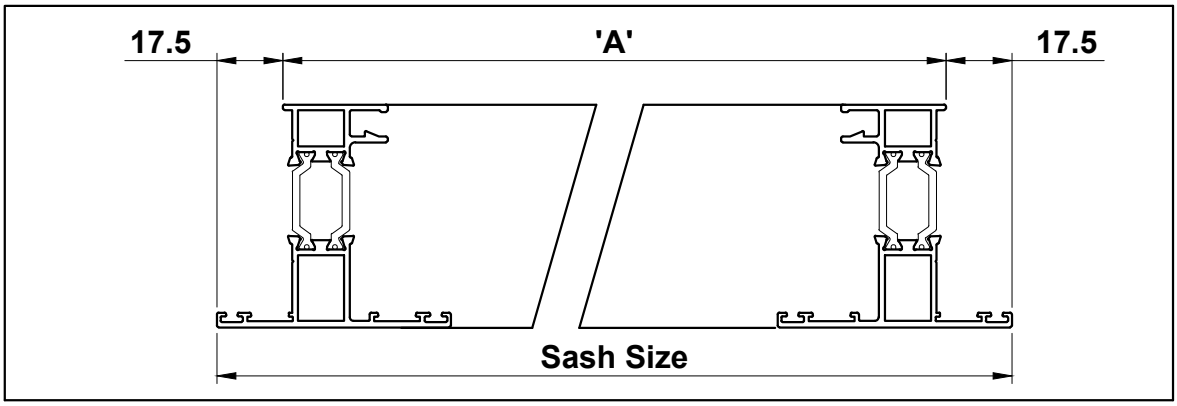

Part Code	Rod Length (mm)	Number of Keeps	Sash Rebate Size ('A')		Pack QTY
			Minimum	Maximum	
ACET4001L	359	2	364	509	20
ACET4001R					
ACET4002L	505	2	510	759	20
ACET4002R					
ACET4003L	755	2	760	1009	20
ACET4003R					
ACET4004L	1005	4	1010	1259	20
ACET4004R					
ACET4005L	1255	4	1260	1400	20
ACET4005R					

Note: To Suit Handles with 7mm x 7mm spindle

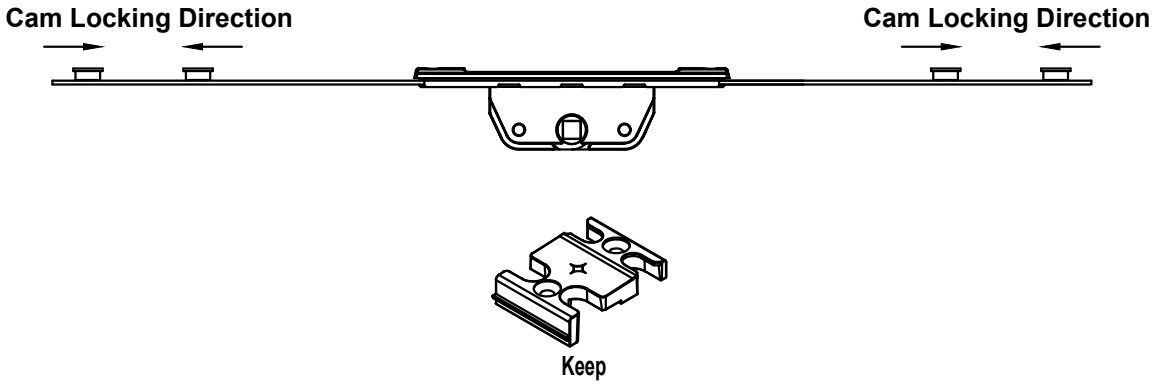

T-BARS
ACVG65=2.5mm
ACVG66=3.0mm
ACVL150=4.0mm

Screw (Grub)

MF	= Mill Finish	W	= White
SA	= Silver Anodised	Z	= Black
KL	= Basic Colour		
HP	= Special Colour		
SSC	= Smooth Satin Chrome		
SMC	= Smokey Chrome		
PC	= Polished Chrome		

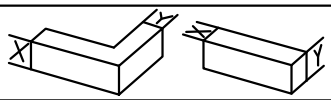

STANDARD ACCESSORIES

Image	Part Code	Pack	Unit	Application	Colour
	**ACMX09761** **Maxi Gloss**	1	each		MF SA KL HP SSC SMC W Z PC
	**ACMX09762** **Alu. Bright**	1	each		MF SA KL HP SSC SMC W Z PC
	**ACMX09763** **Teflon Spray**	1	each		MF SA KL HP SSC SMC W Z PC
	**ACMX09764** **Maxi Clean**	1	each		MF SA KL HP SSC SMC W Z PC
	**ACMX09765** **Alu. Cleaner**	1	each		MF SA KL HP SSC SMC W Z PC

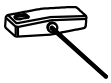

T-BARS
ACVG65=2.5mm
ACVG66=3.0mm
ACVL150=4.0mm

Screw (Grub)

MF = Mill Finish
SA = Silver Anodised
KL = Basic Colour
HP = Special Colour
SSC = Smooth Satin Chrome
SMC = Smokey Chrome
PC = Polished Chrome
W = White
Z = Black

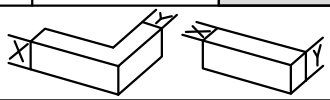

Image	Part Code	Pack	Unit	Application	Colour
	**ACMX09770** **Roll & Wrap 100mm**	1	each		MF SA KL HP SSC SMC W Z PC
	**ACMX09775** **Grip Handwrap**	1	each		MF SA KL HP SSC SMC W Z PC
	**ACMX09801** **Protective Tape 50mm**	1	each		MF SA KL HP SSC SMC W Z PC
	**ACMX09802** **Protective Tape 70mm**	1	each		MF SA KL HP SSC SMC W Z PC
	**ACMX09803** **Protective Tape 100mm**	1	each		MF SA KL HP SSC SMC W Z PC

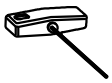

T-BARS
ACVG65=2.5mm
ACVG66=3.0mm
ACVL150=4.0mm

Screw (Grub)

MF = Mill Finish
SA = Silver Anodised
KL = Basic Colour
HP = Special Colour
SSC = Smooth Satin Chrome
SMC = Smokey Chrome
PC = Polished Chrome
W = White
Z = Black

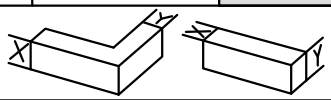

Image	Part Code	Pack	Unit	Application	Colour
	**ACMX09830** **Rubber Sealant**	**1**	**each**		MF SA KL HP SSC SMC W Z PC
	**ACSIL04** **Sealing Glue** **Order with suffix of KL colour (eg.ACSIL04KL005) or BL=Black/WP=White/ CL=Clear**	**1**	**each**		MF SA KL ✓ HP SSC SMC W ✓ Z ✓ PC
	**ACSIL08** **Silicon Gun**	**1**	**each**		MF SA KL HP SSC SMC W Z PC
	**ACSIL013** **Glue for Mitre**	**1**	**each**		MF SA KL HP SSC SMC W Z PC
	**ACSIL014** **Anti-Corrosion Coating**	**1**	**each**		MF ✓ SA KL HP SSC SMC W Z PC

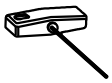

T-BARS
ACVG65=2.5mm
ACVG66=3.0mm
ACVL150=4.0mm

Screw (Grub)

MF = Mill Finish
SA = Silver Anodised
KL = Basic Colour
HP = Special Colour
SSC = Smooth Satin Chrome
SMC = Smokey Chrome
PC = Polished Chrome
W = White
Z = Black

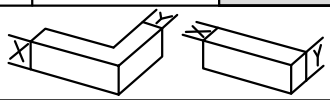

Image	Part Code	Pack	Unit	Application	Colour
	**ACUN3900** **Gasket Roller**	**1**	**each**		MF SA KL HP SSC SMC W Z PC
					MF SA KL HP SSC SMC W Z PC
					MF SA KL HP SSC SMC W Z PC
					MF SA KL HP SSC SMC W Z PC
					MF SA KL HP SSC SMC W Z PC

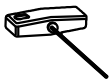

T-BARS
ACVG65=2.5mm
ACVG66=3.0mm
ACVL150=4.0mm

Screw (Grub)

MF = Mill Finish
SA = Silver Anodised
KL = Basic Colour
HP = Special Colour
SSC = Smooth Satin Chrome
SMC = Smokey Chrome
PC = Polished Chrome
W = White
Z = Black

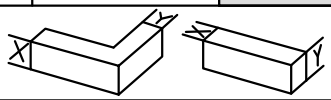

Section C

Sections

Scale Elevations

Standard Casement Detail

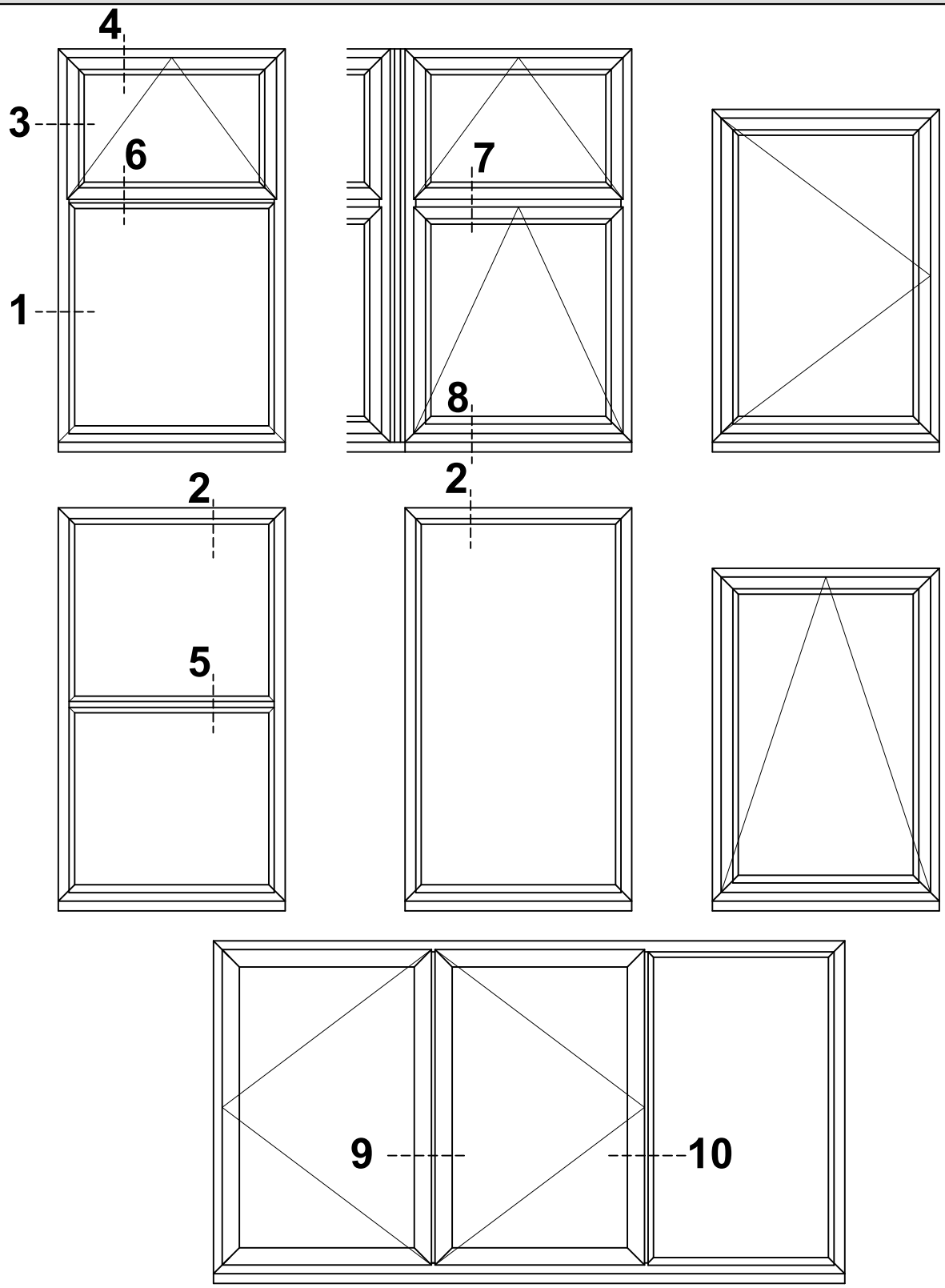

Do Not Scale From This Drawing

Alitherm 400

Detail 1A

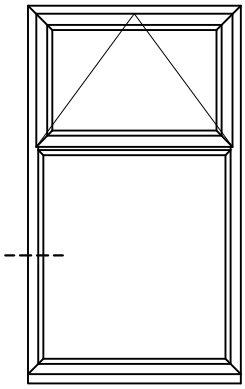

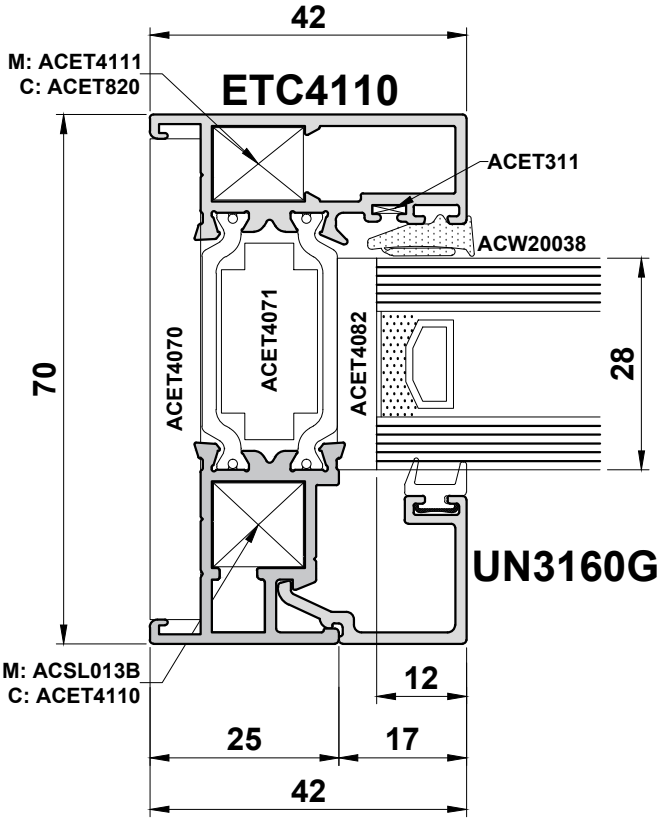

Do Not Scale From This Drawing

ISSUED: JANUARY 2026

Alitherm 400

Detail 1B

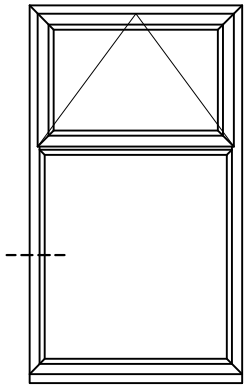

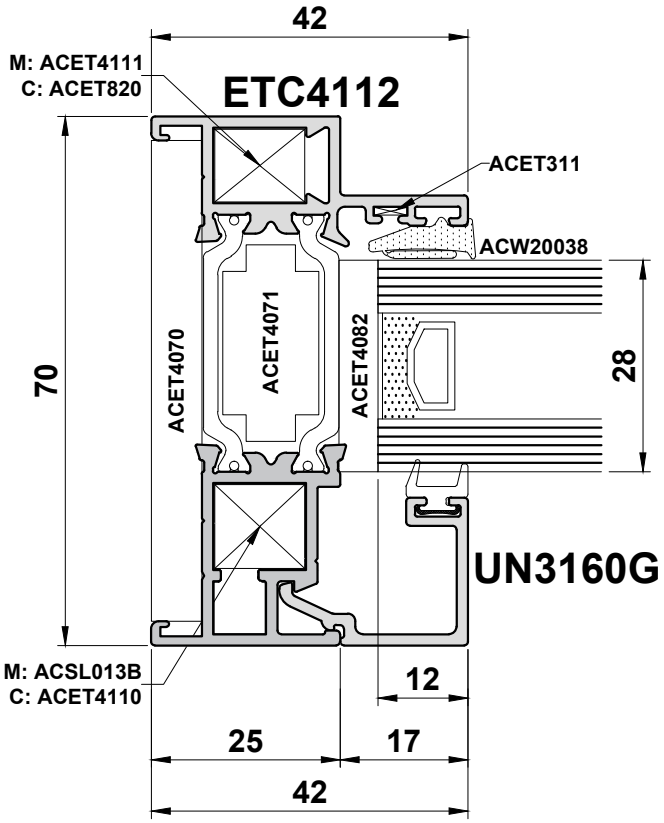

Do Not Scale From This Drawing

Detail 1C

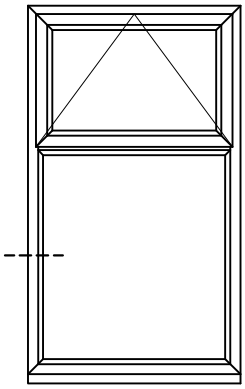

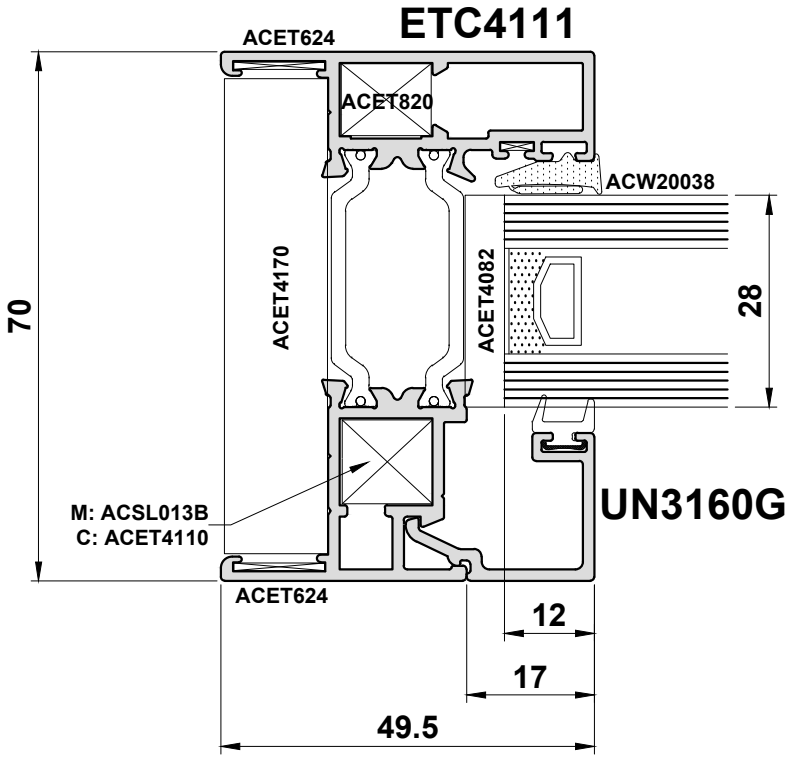

Do Not Scale From This Drawing

Detail 1D

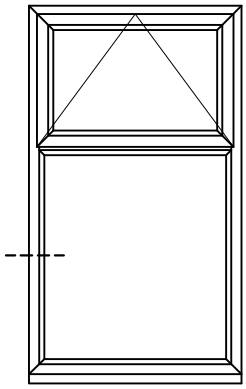

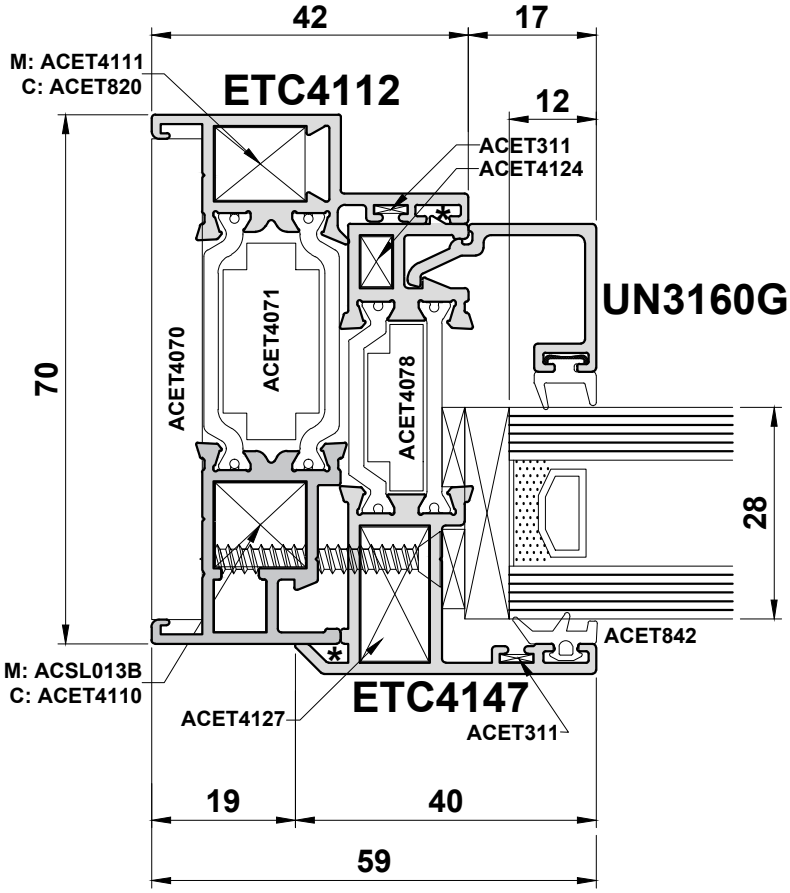

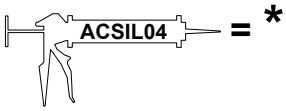

Do Not Scale From This Drawing

Detail 2A

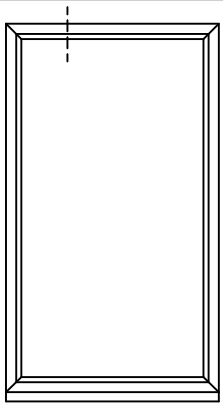

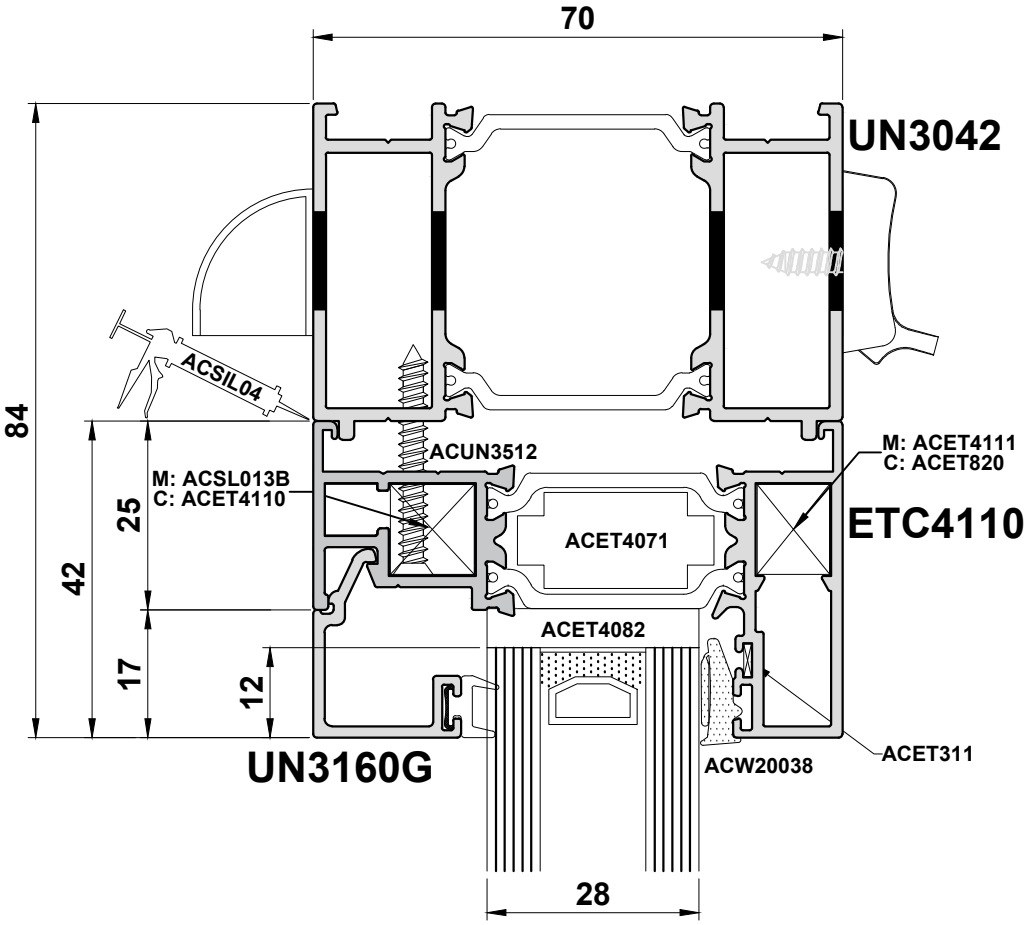

Do Not Scale From This Drawing

ISSUED: JANUARY 2026

Detail 2B

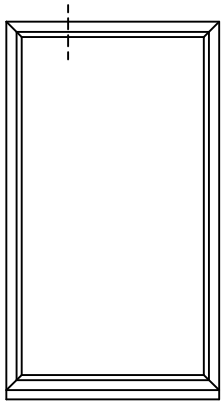

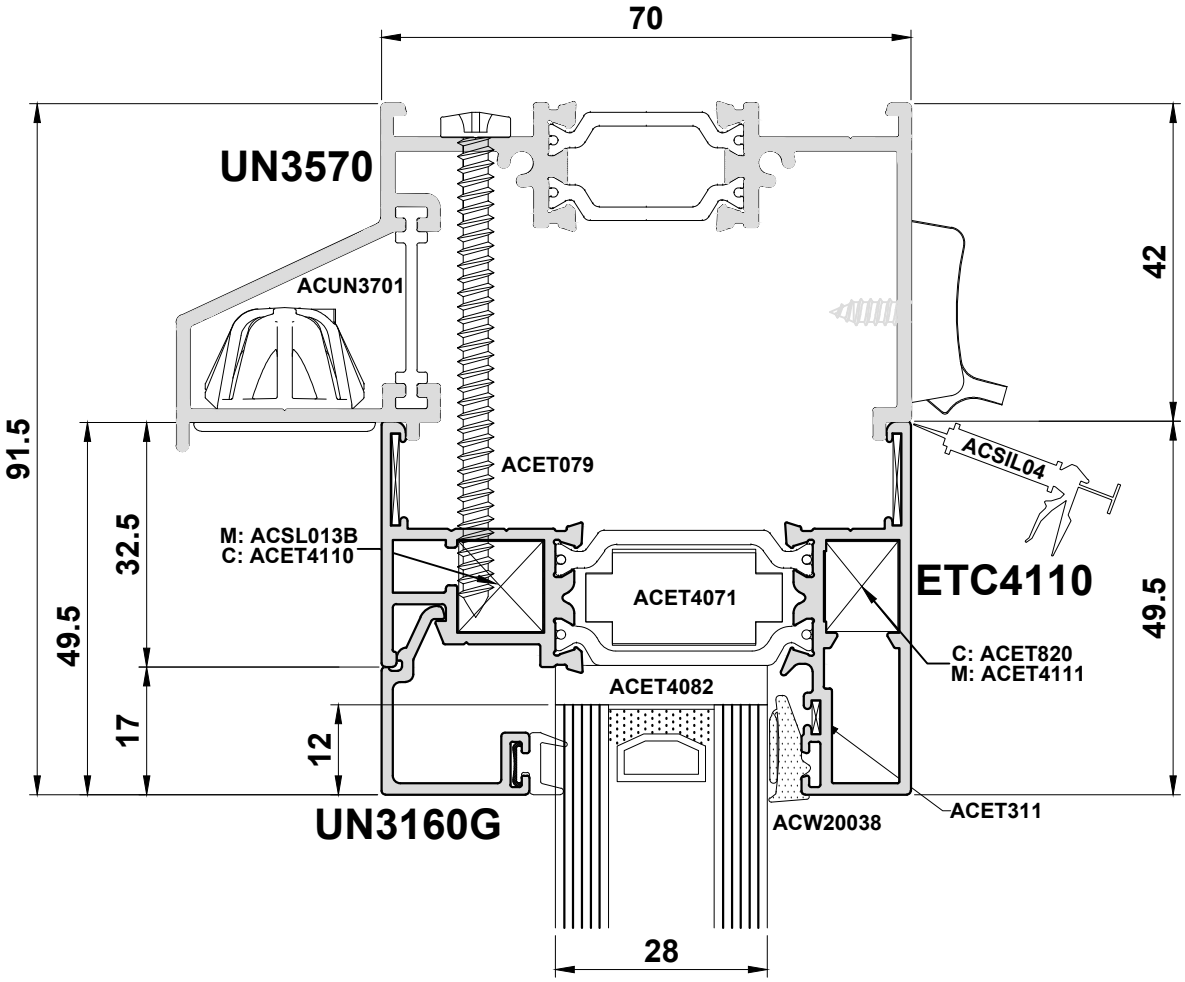

Do Not Scale From This Drawing

Detail 2C

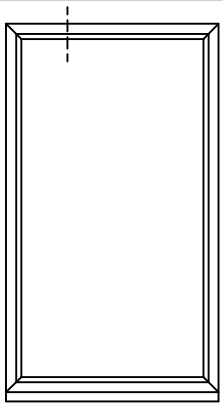

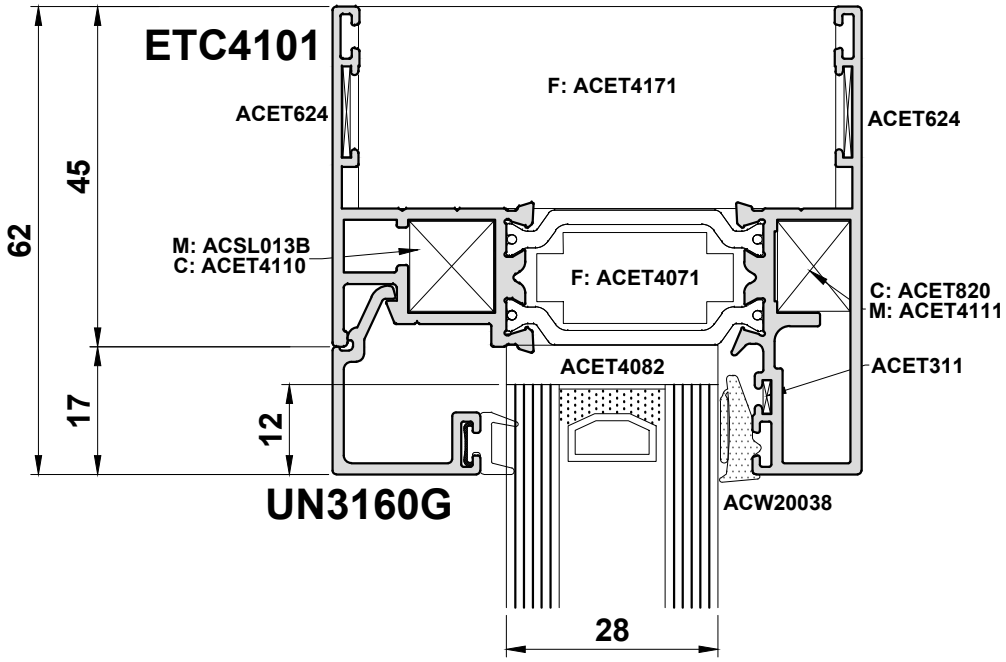

Do Not Scale From This Drawing

Detail 3A

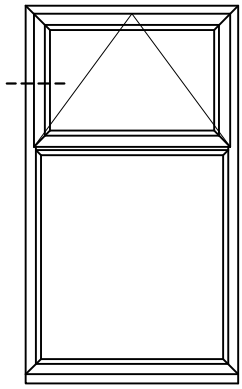

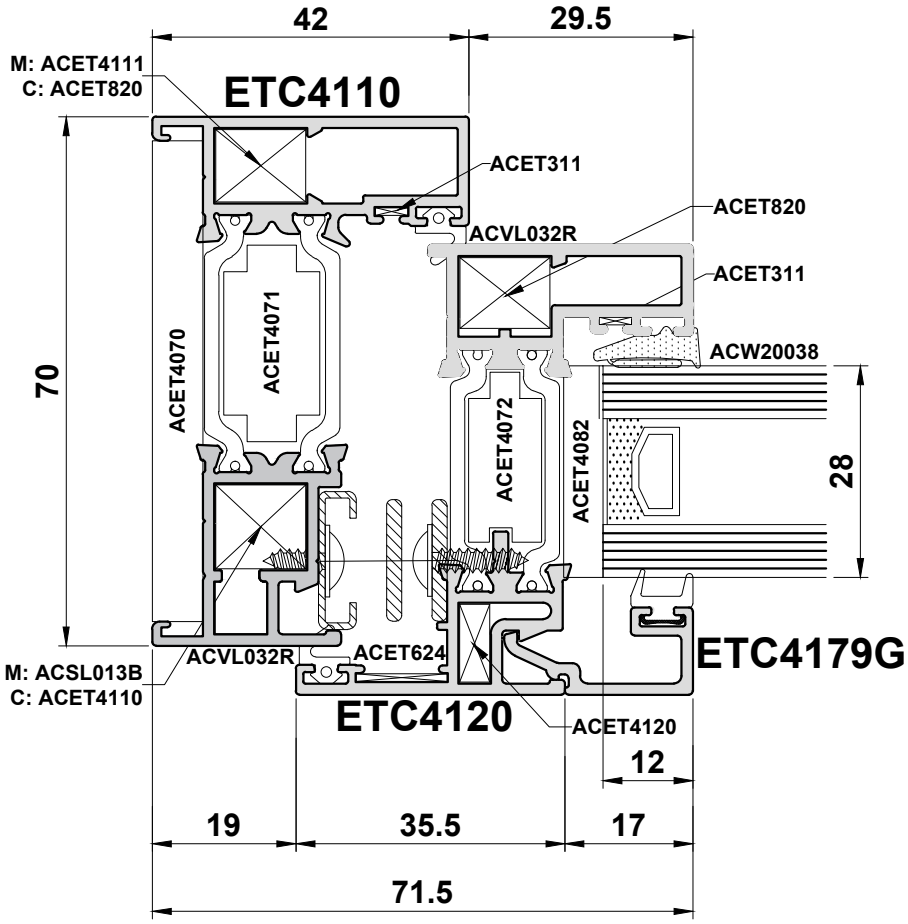

Do Not Scale From This Drawing

Detail 3B

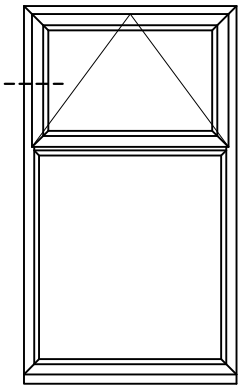

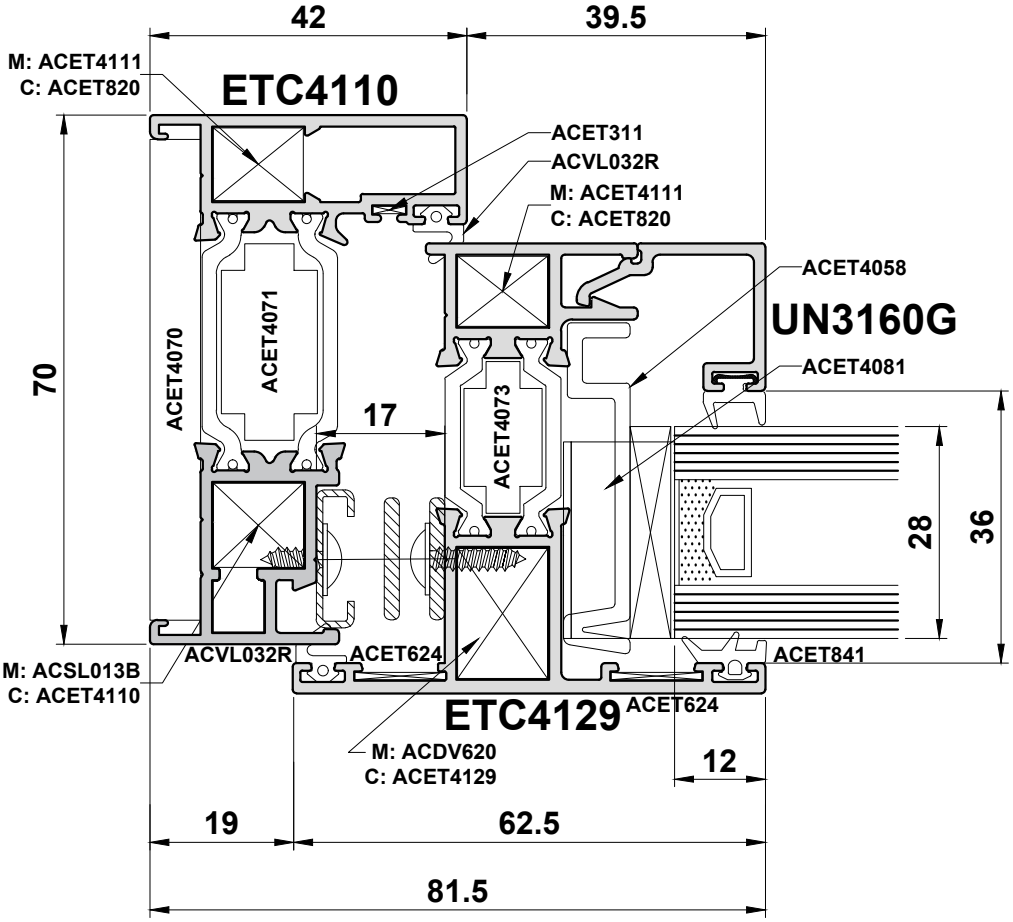

Do Not Scale From This Drawing

Detail 3C

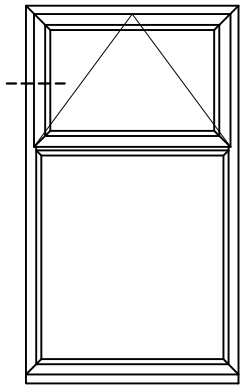

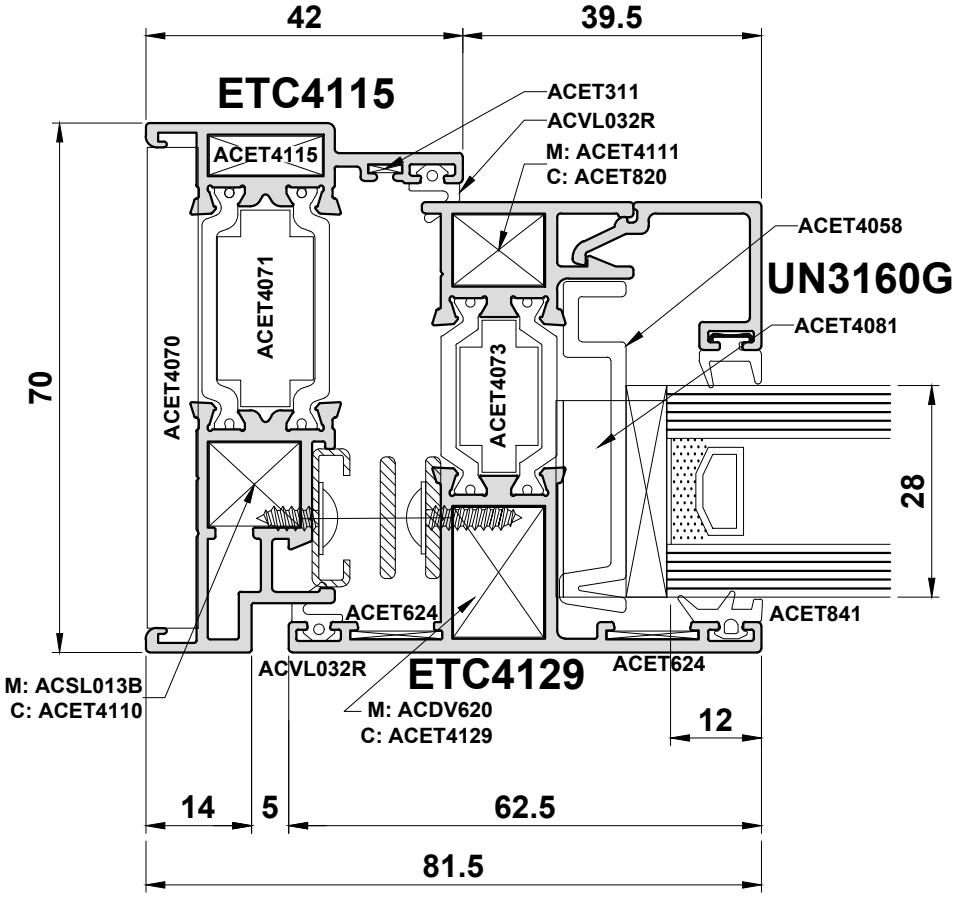

Do Not Scale From This Drawing

Detail 3D

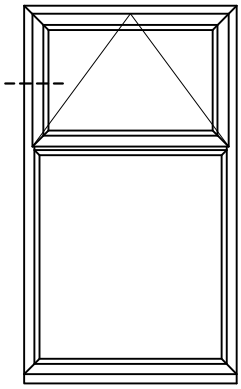

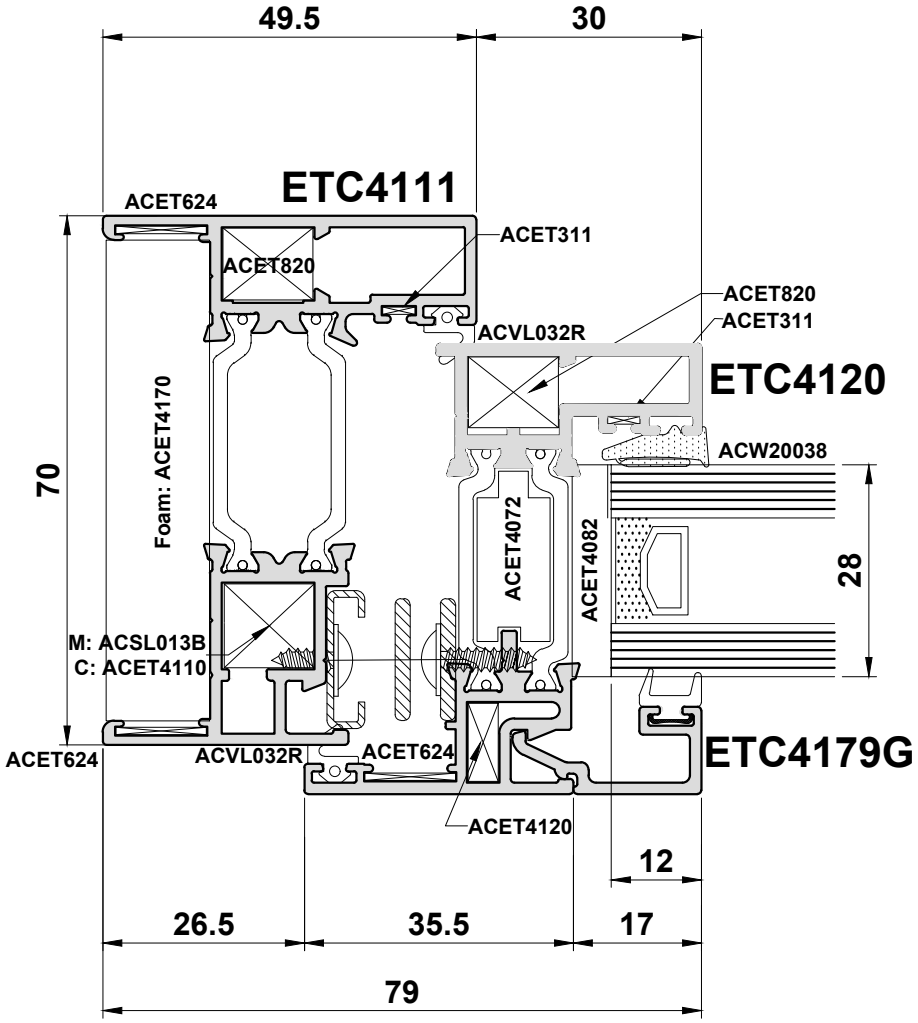

Do Not Scale From This Drawing

Detail 3E

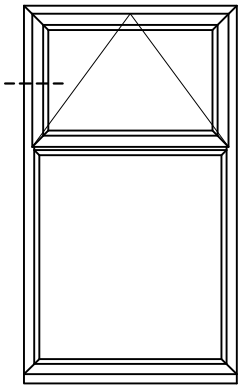

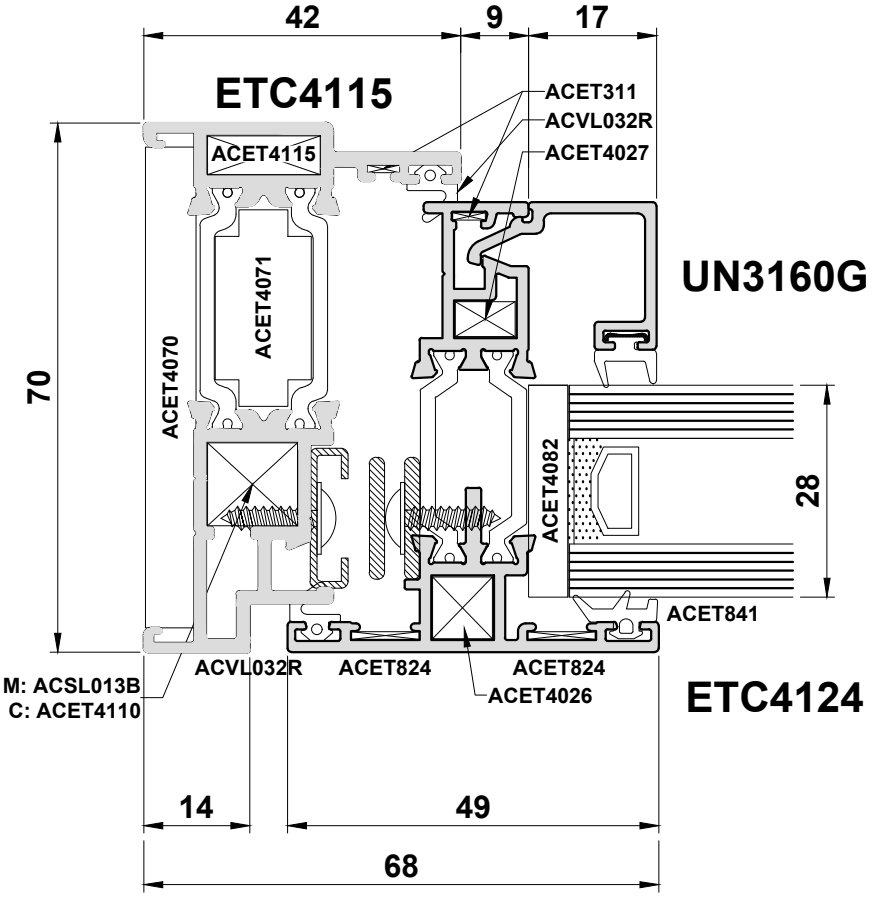

Do Not Scale From This Drawing

Detail 3F

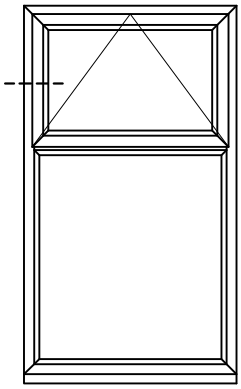

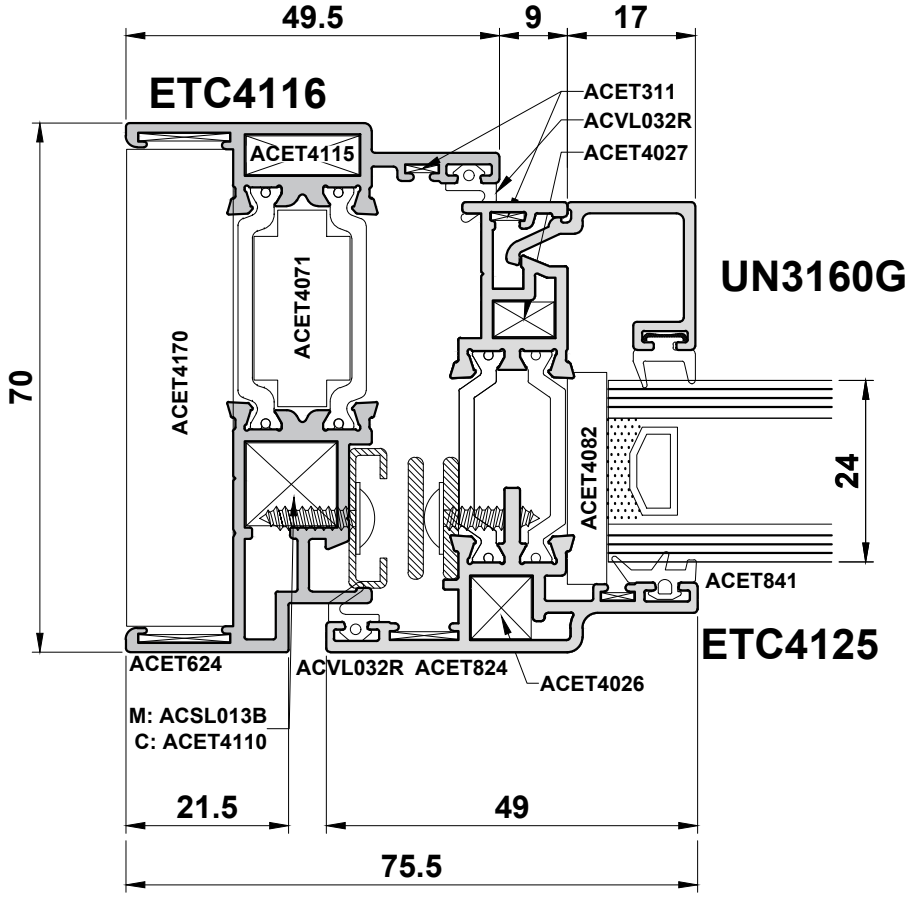

Do Not Scale From This Drawing

ISSUED: JANUARY 2026

Detail 3G

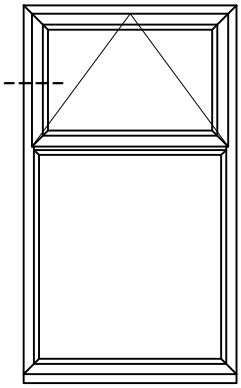

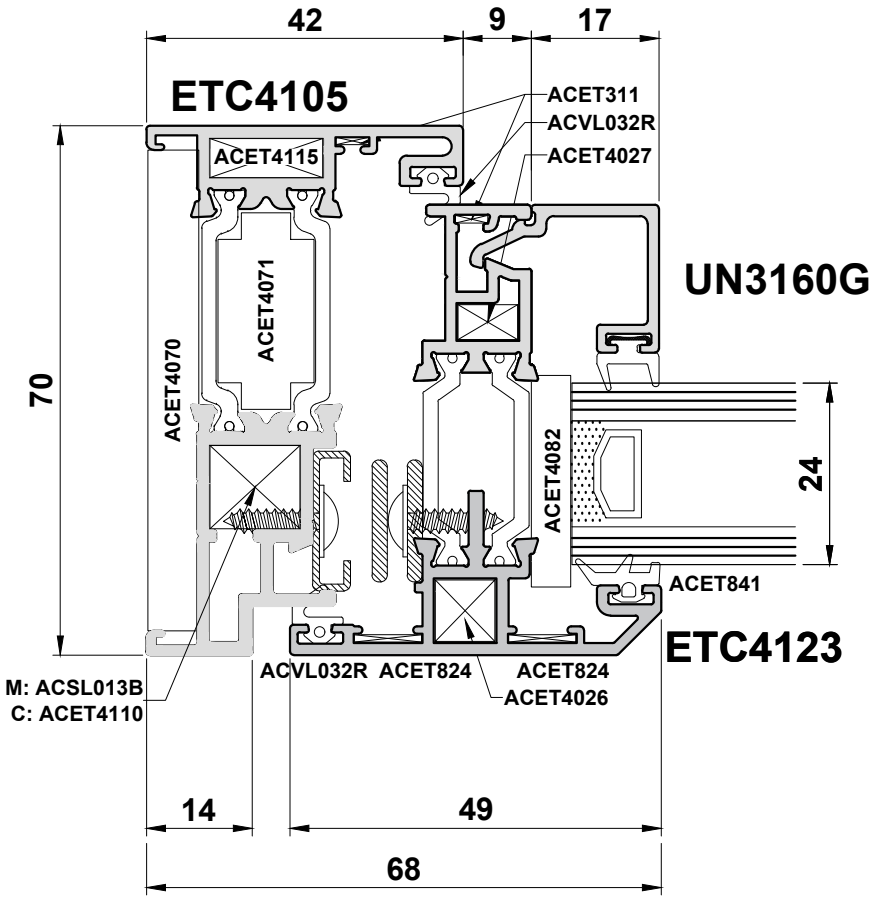

Do Not Scale From This Drawing

Detail 3H

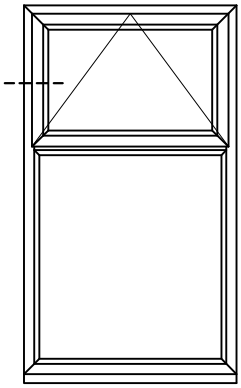

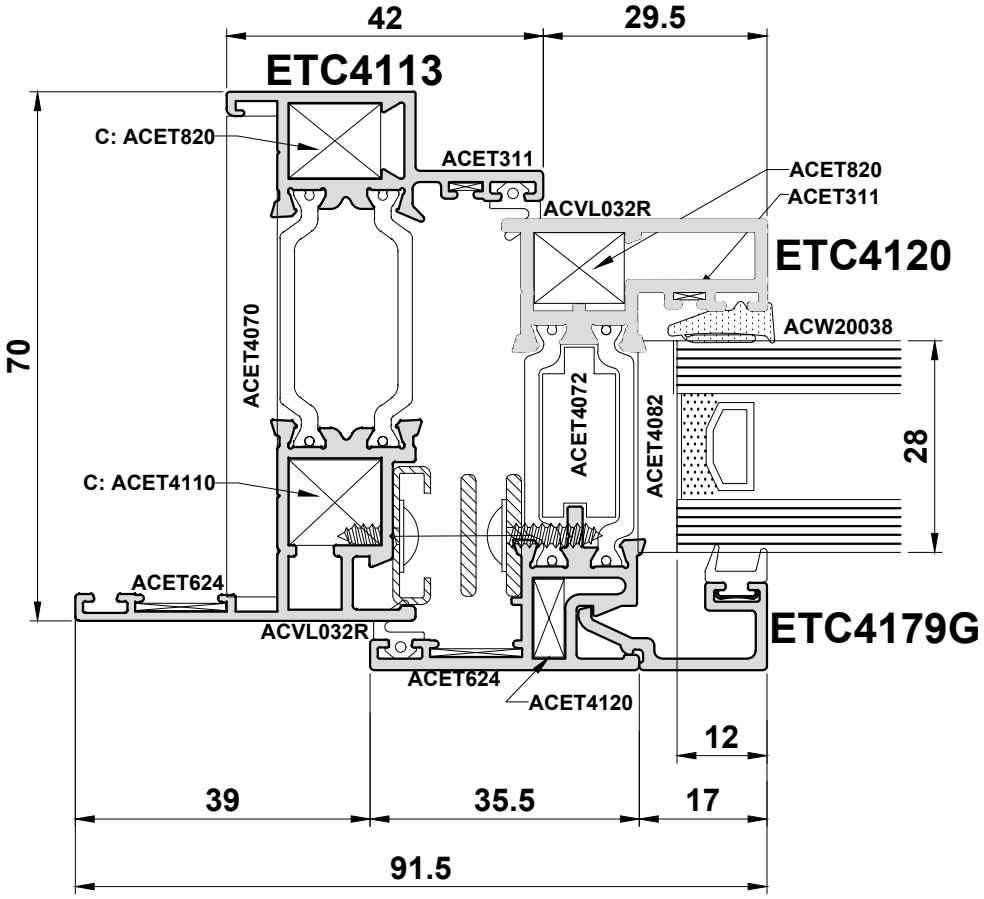

Do Not Scale From This Drawing

Detail 3I

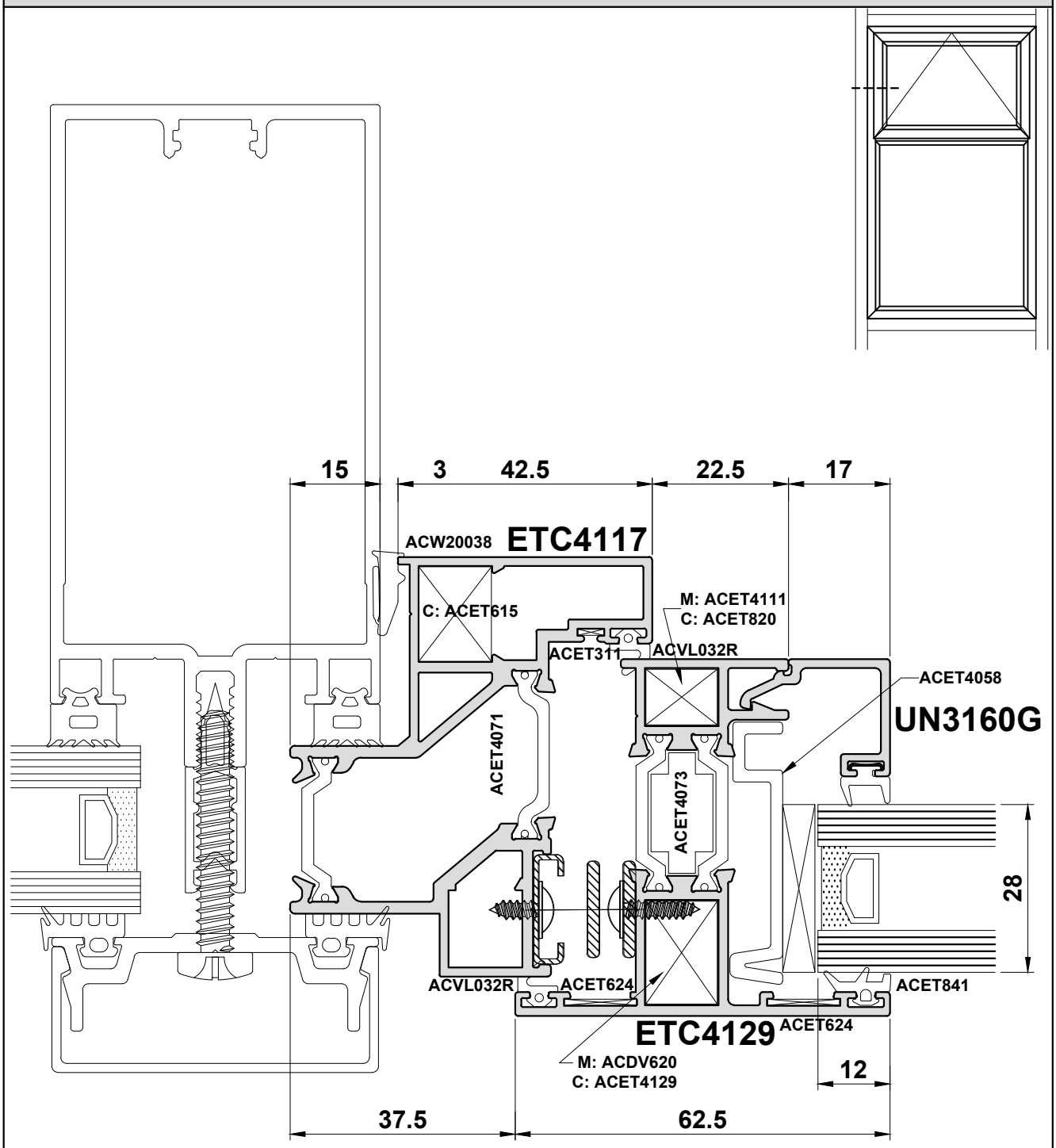

Do Not Scale From This Drawing

Detail 4A

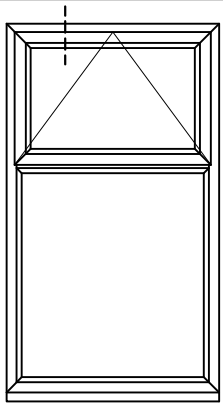

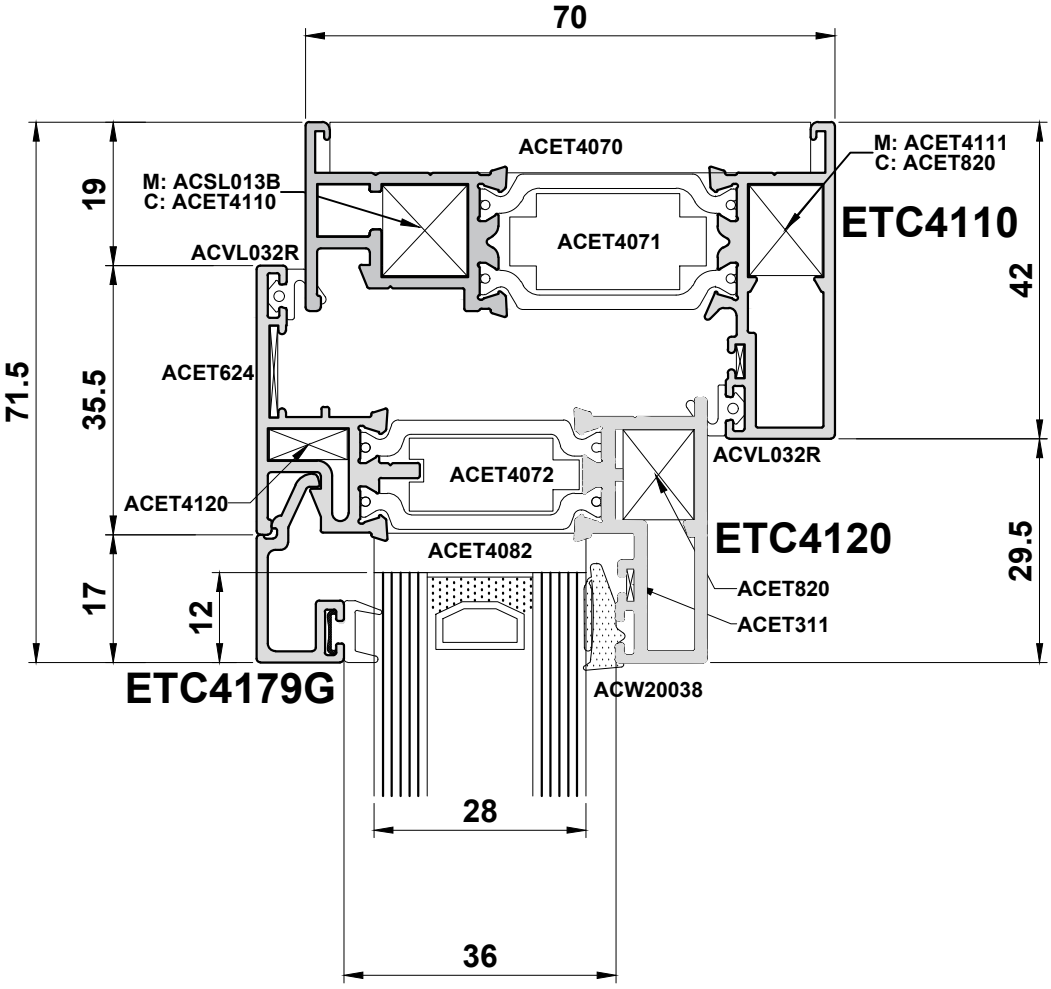

Do Not Scale From This Drawing

Detail 4B

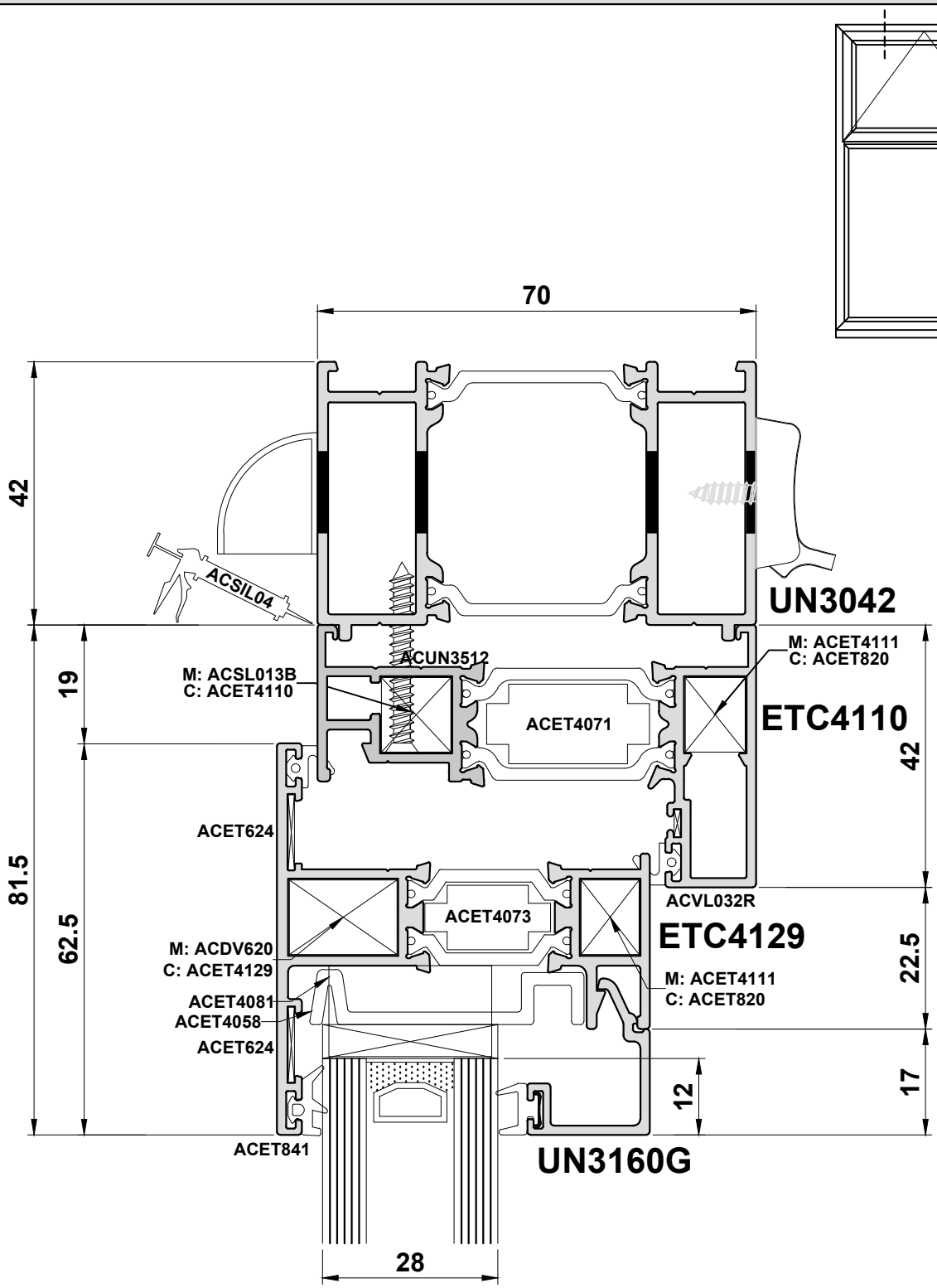

Do Not Scale From This Drawing

Detail 4C

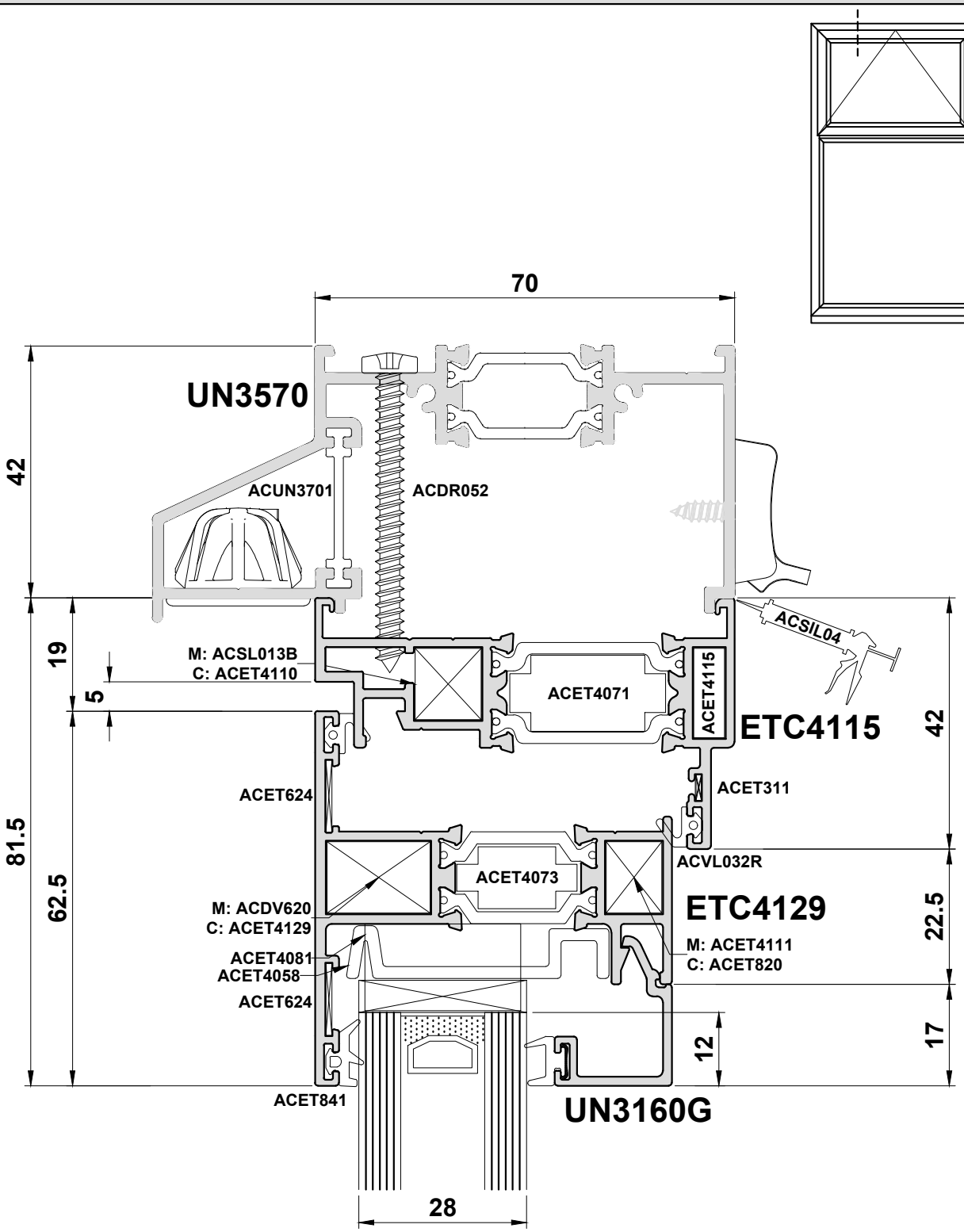

Do Not Scale From This Drawing

ISSUED: JANUARY 2026

Detail 4D

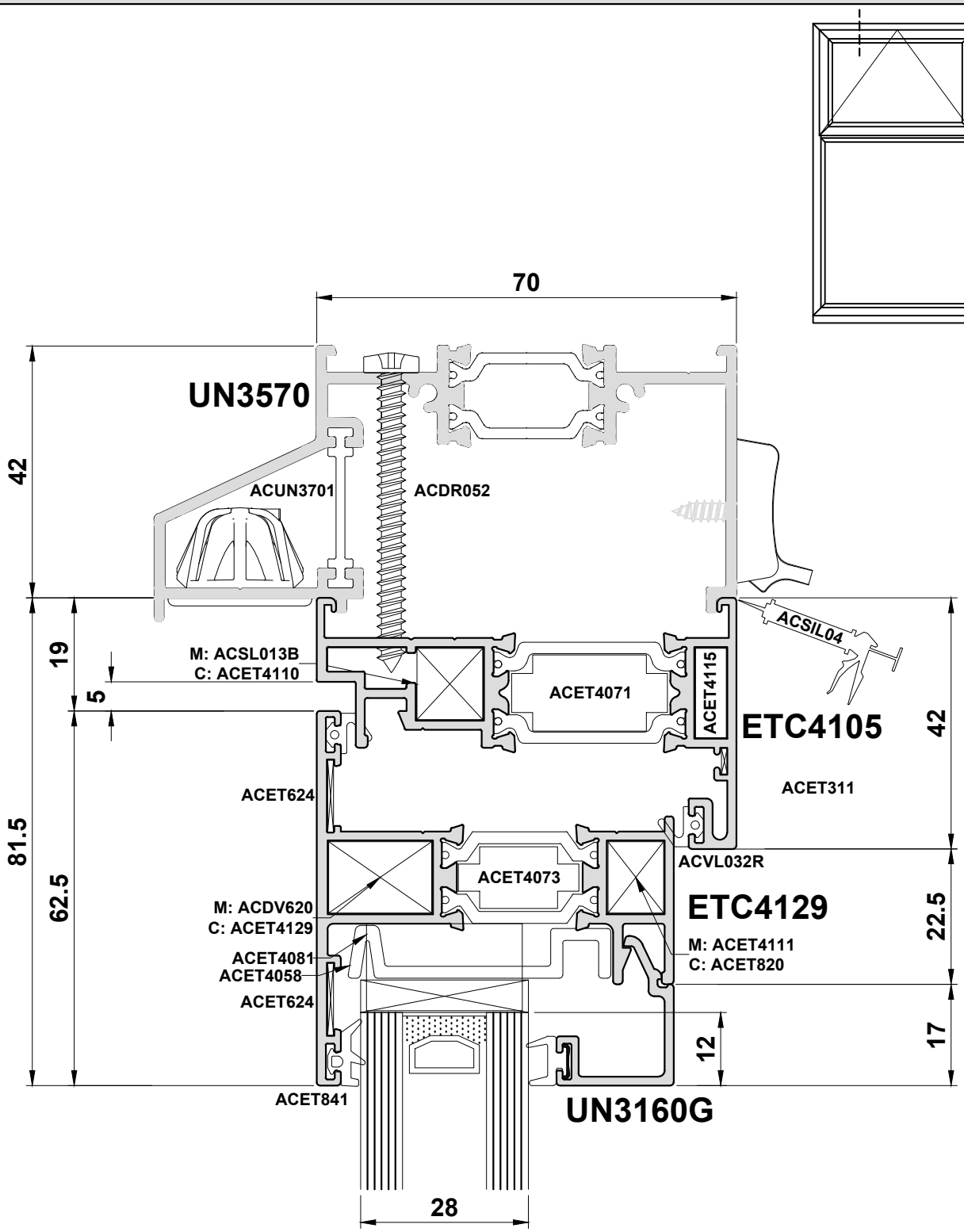

Do Not Scale From This Drawing

Detail 4E

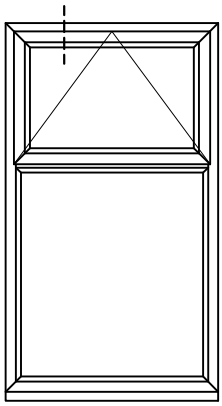

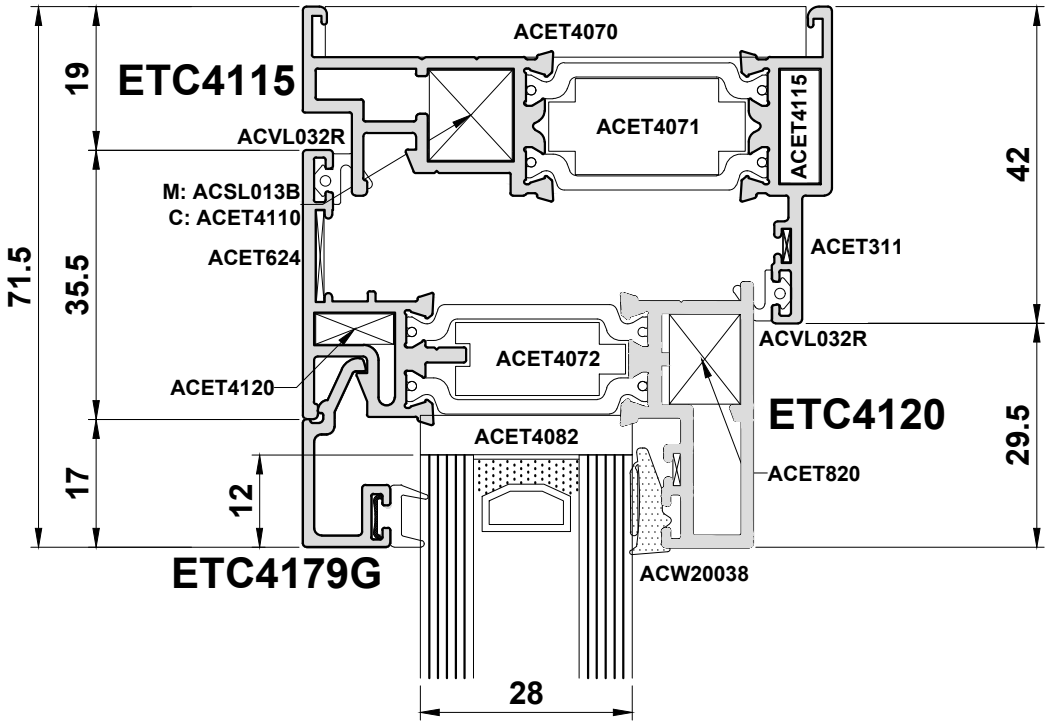

Do Not Scale From This Drawing

Detail 4F

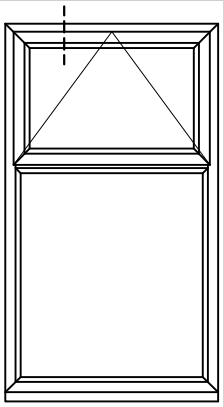

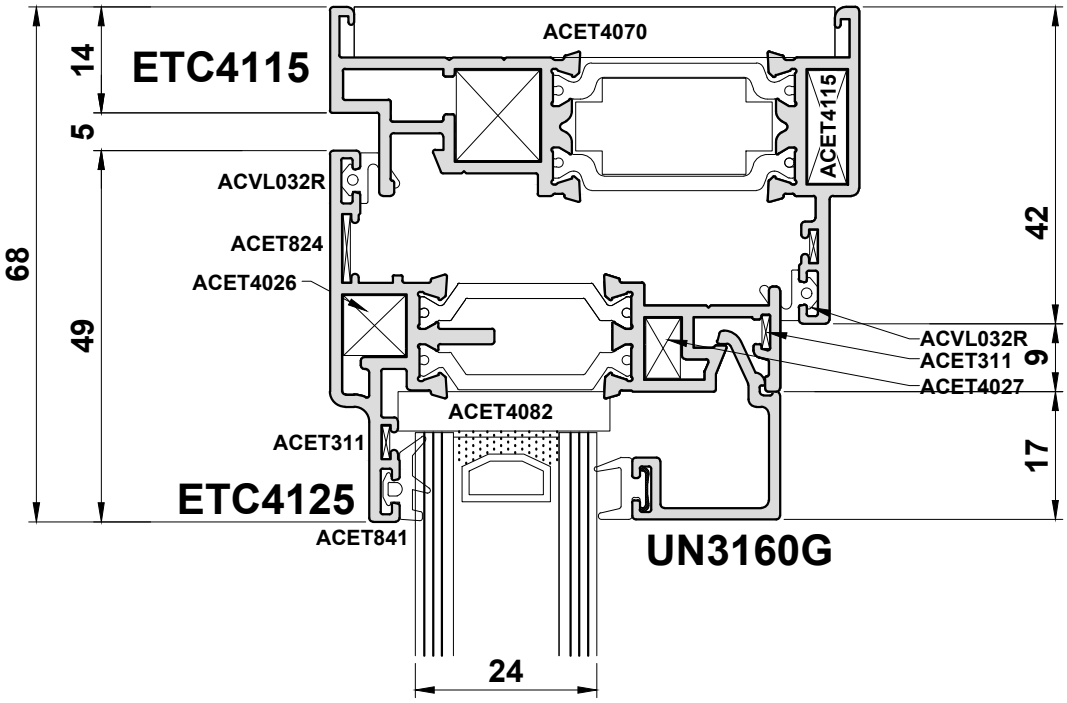

Do Not Scale From This Drawing

Detail 5A

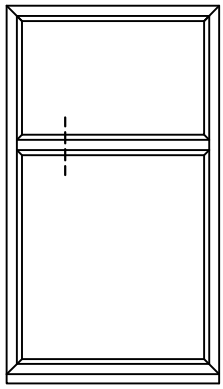

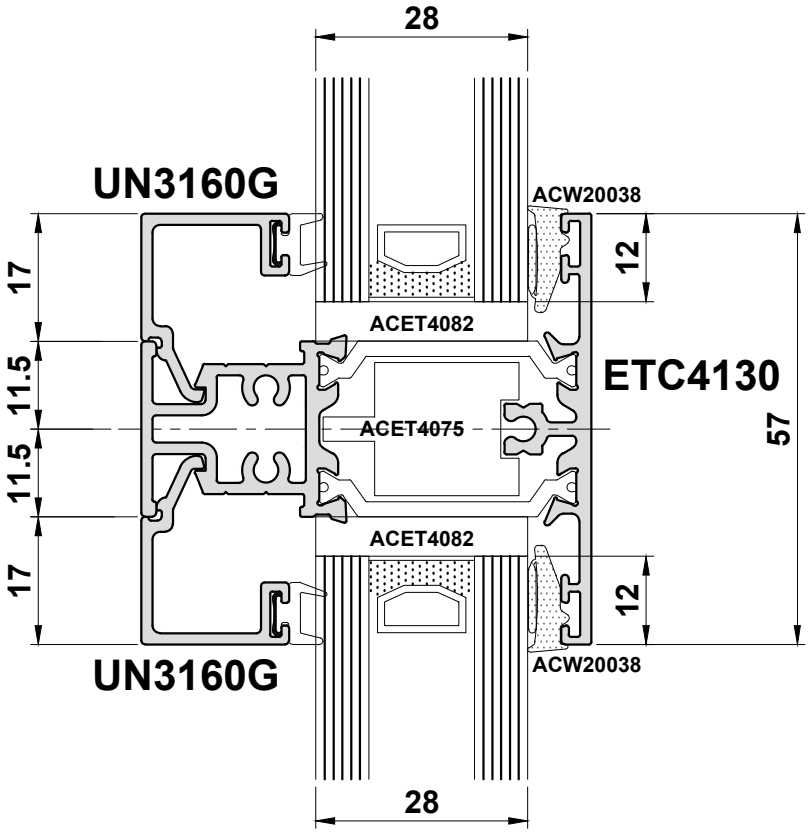

Note: Transoms will drain through the join to the outerframe.

Do Not Scale From This Drawing

Detail 5B

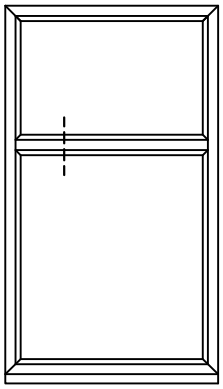

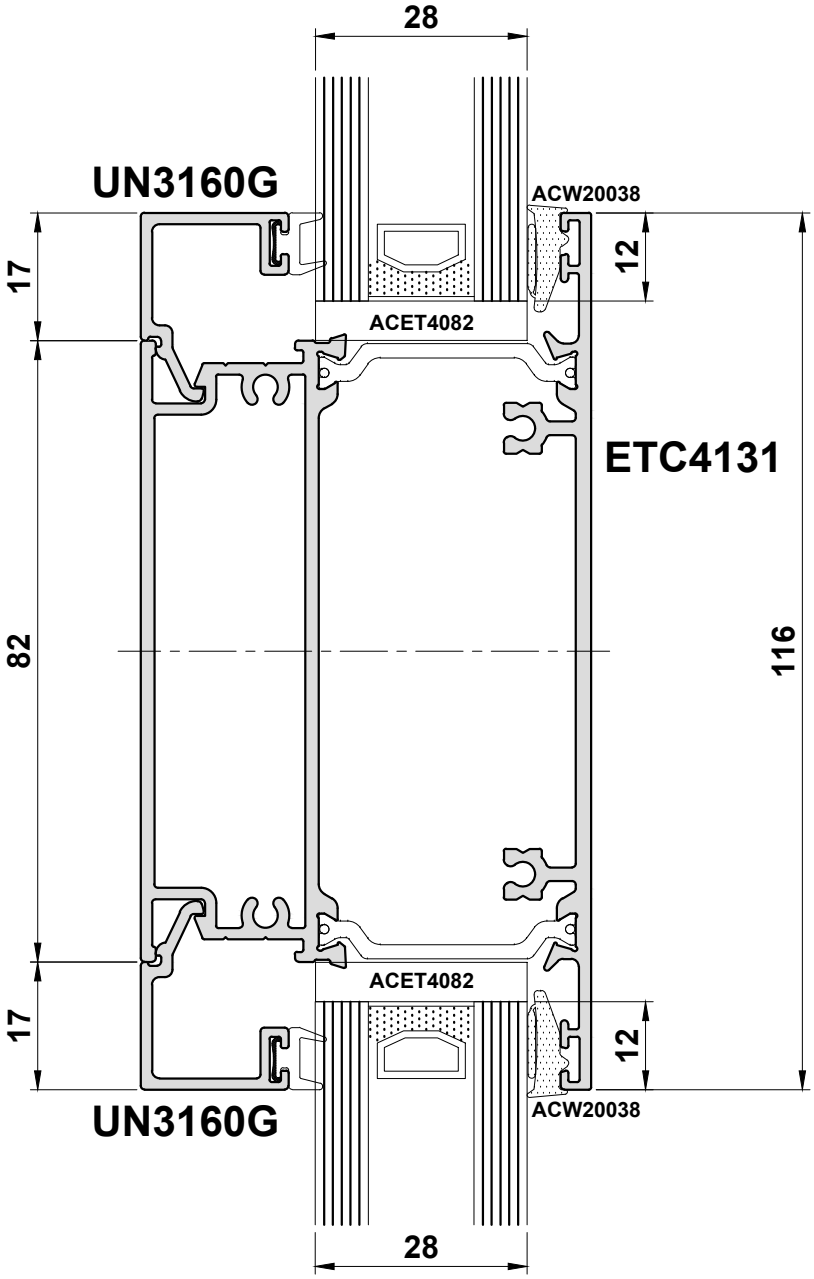

Note: Transoms will drain through the join to the outerframe.

Do Not Scale From This Drawing

Detail 5C

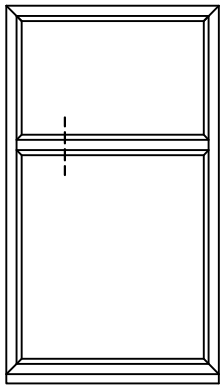

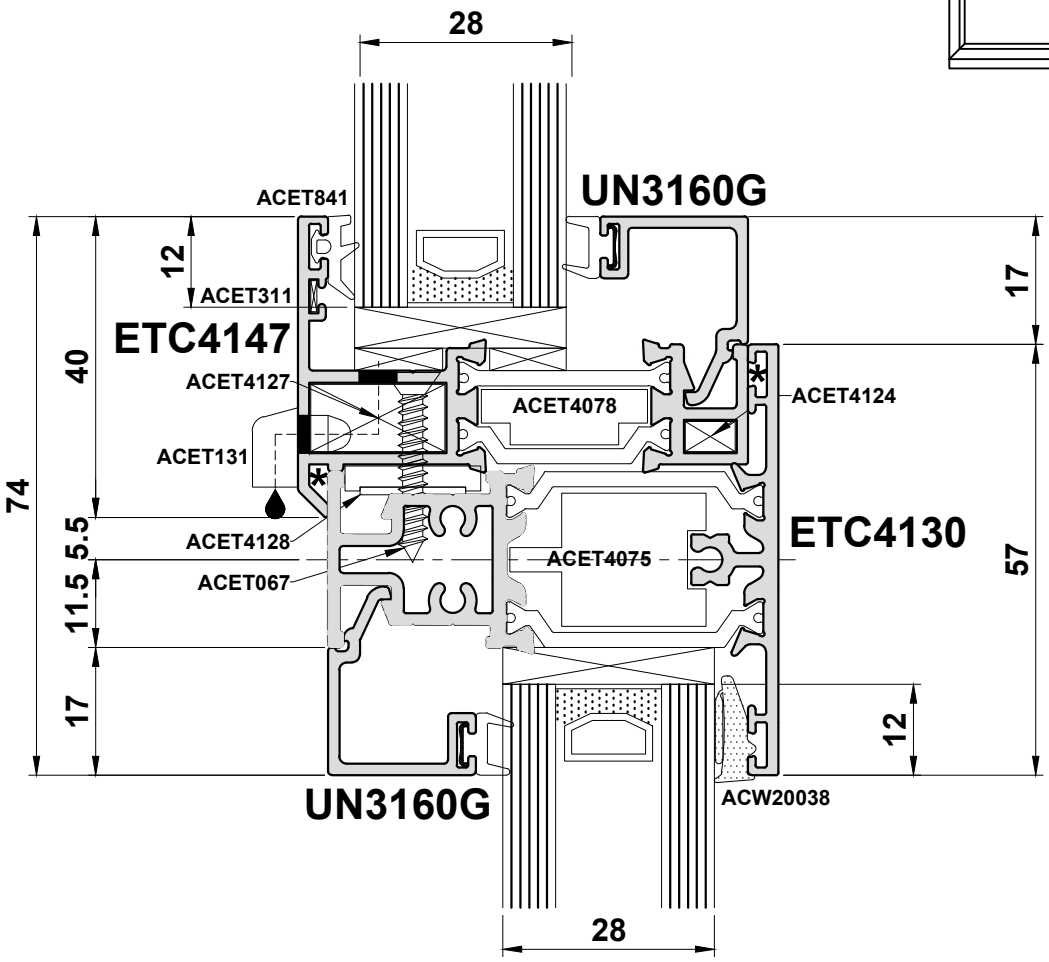

= *

Note: Transoms will drain through the join to the outerframe.

Do Not Scale From This Drawing

ISSUED: JANUARY 2026

Detail 6A

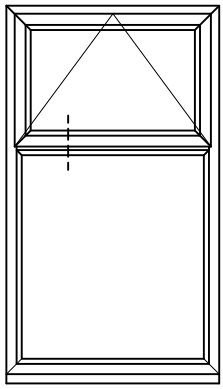

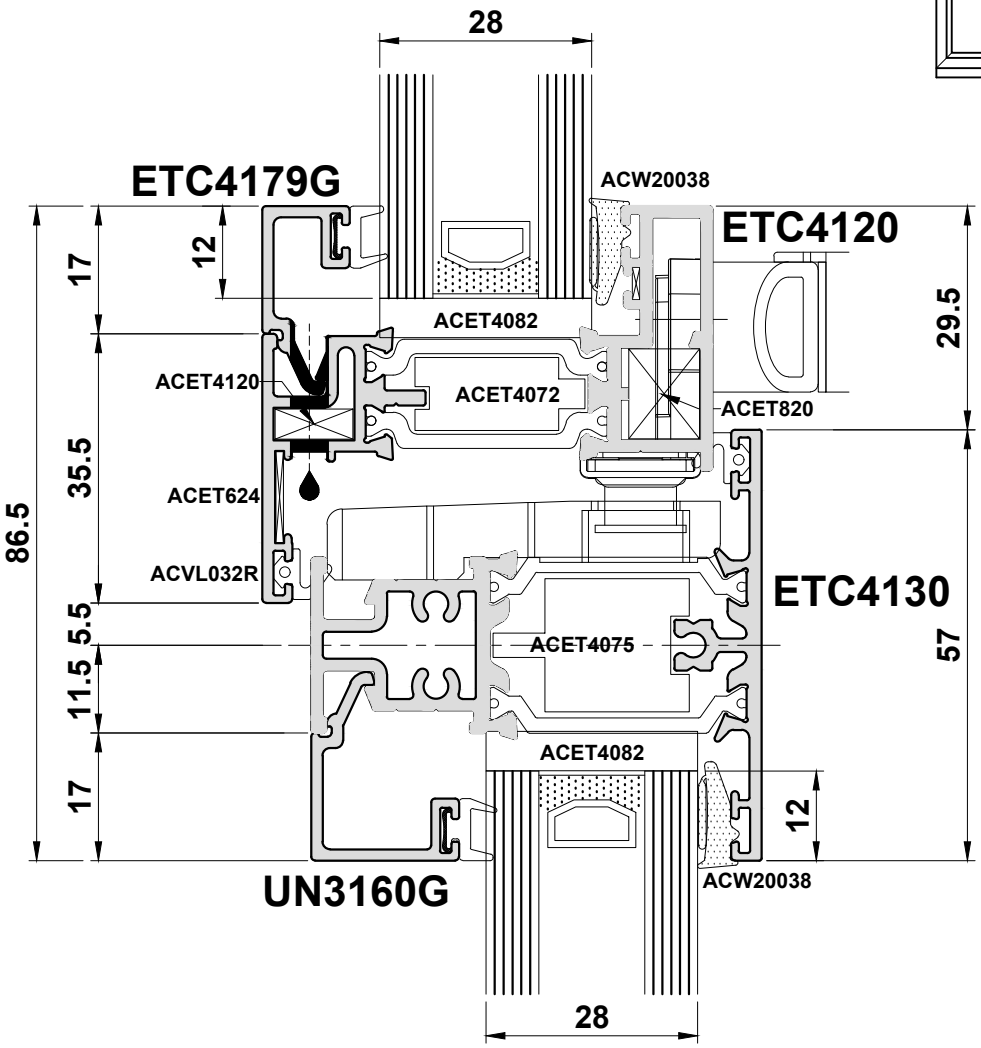

Note: Transoms will drain through the join to the outerframe.

Do Not Scale From This Drawing

Detail 6B

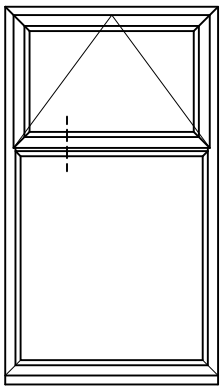

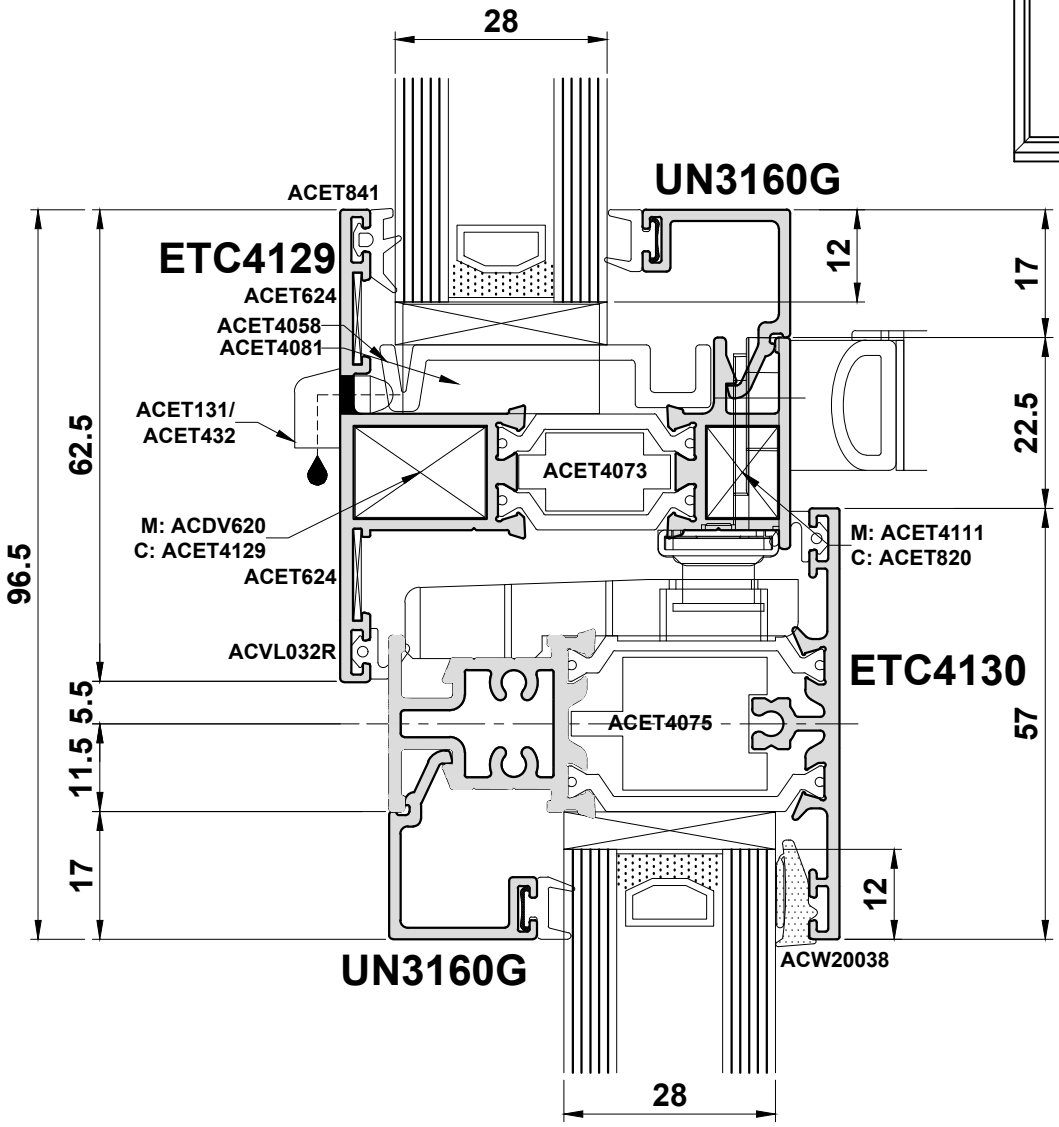

Note: Transoms will drain through the join to the outerframe.

Do Not Scale From This Drawing

Detail 6C

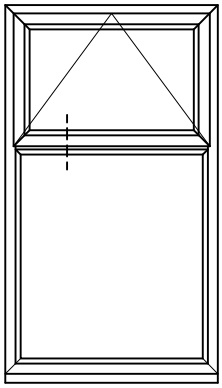

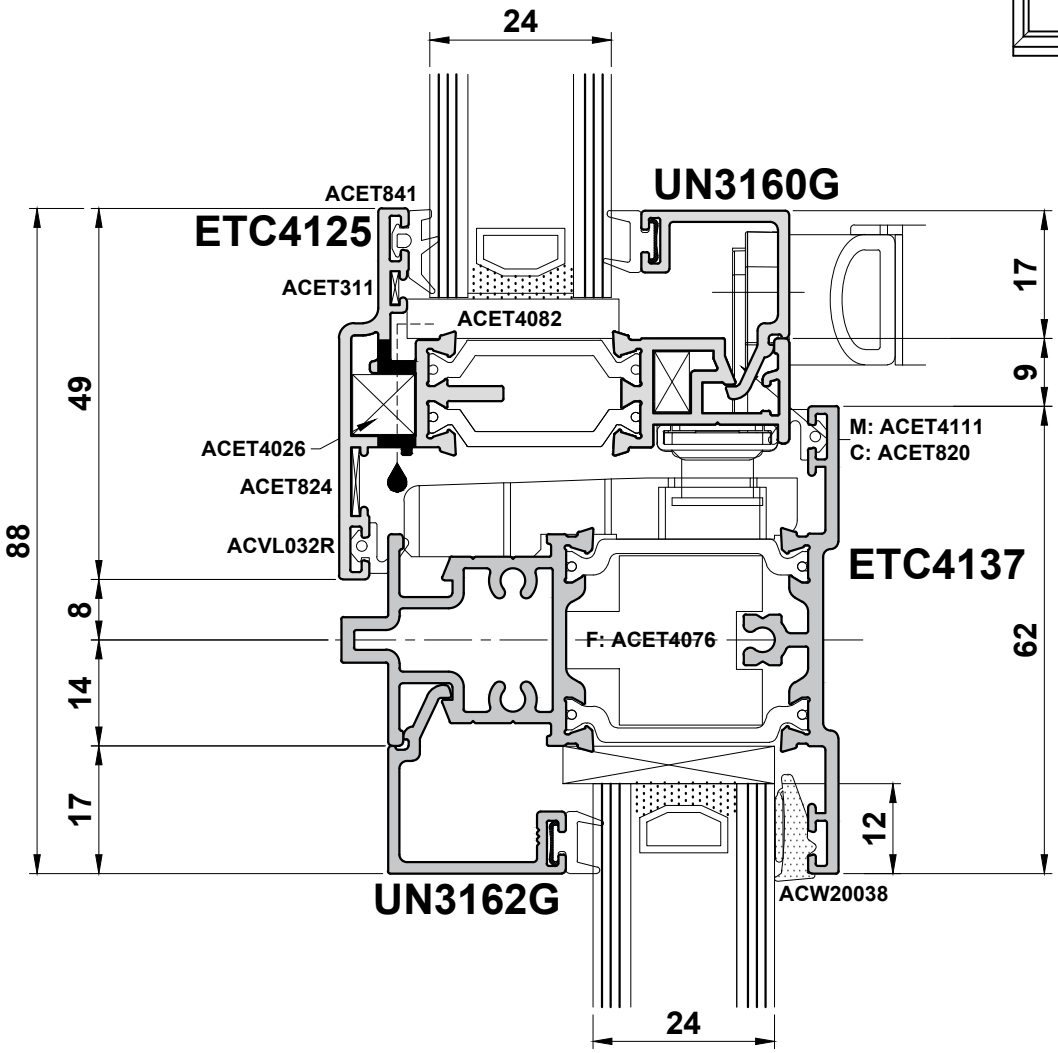

Note: Transoms will drain through the join to the outerframe.

Do Not Scale From This Drawing

Detail 6D

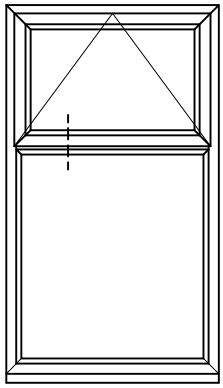

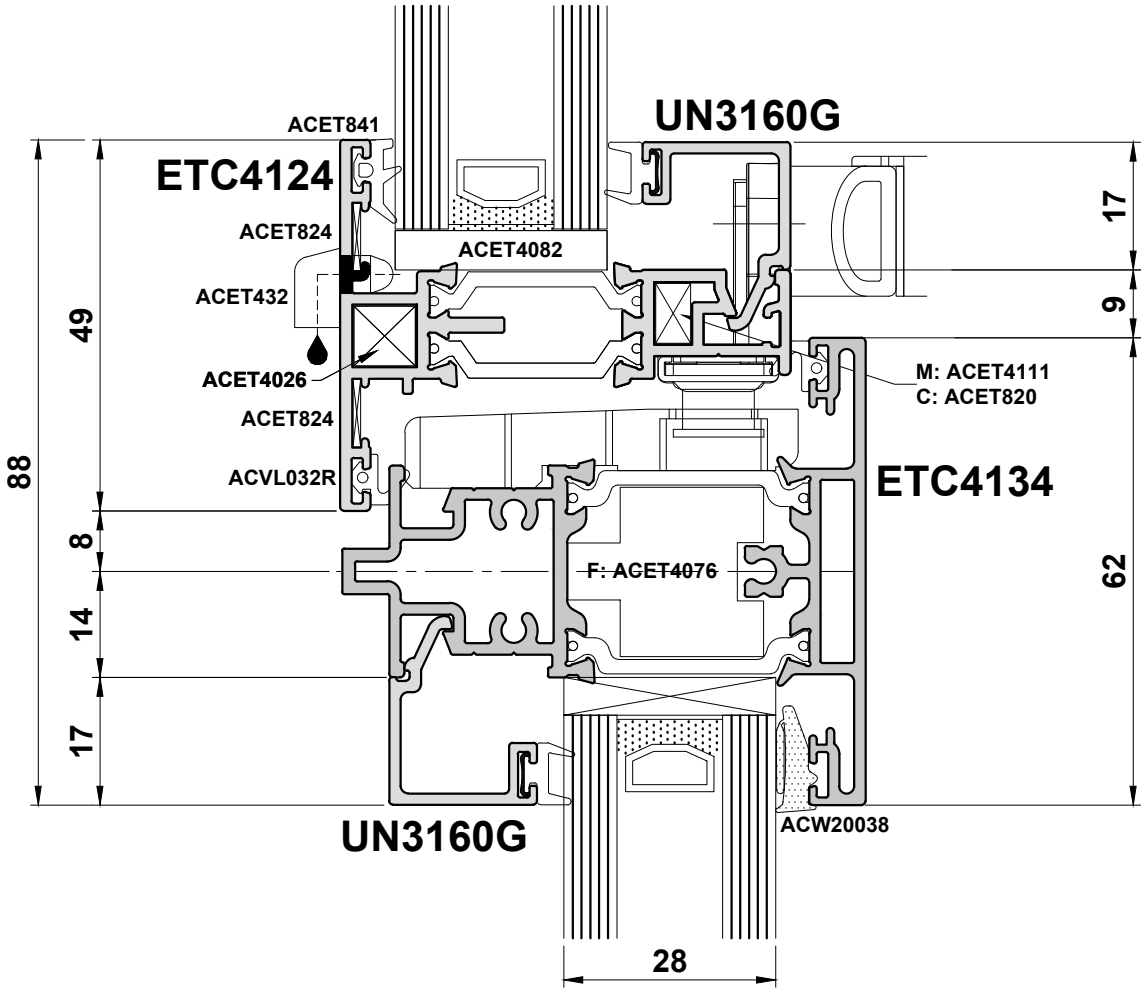

Do Not Scale From This Drawing

Detail 6E

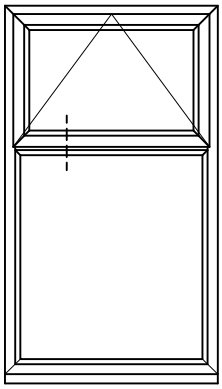

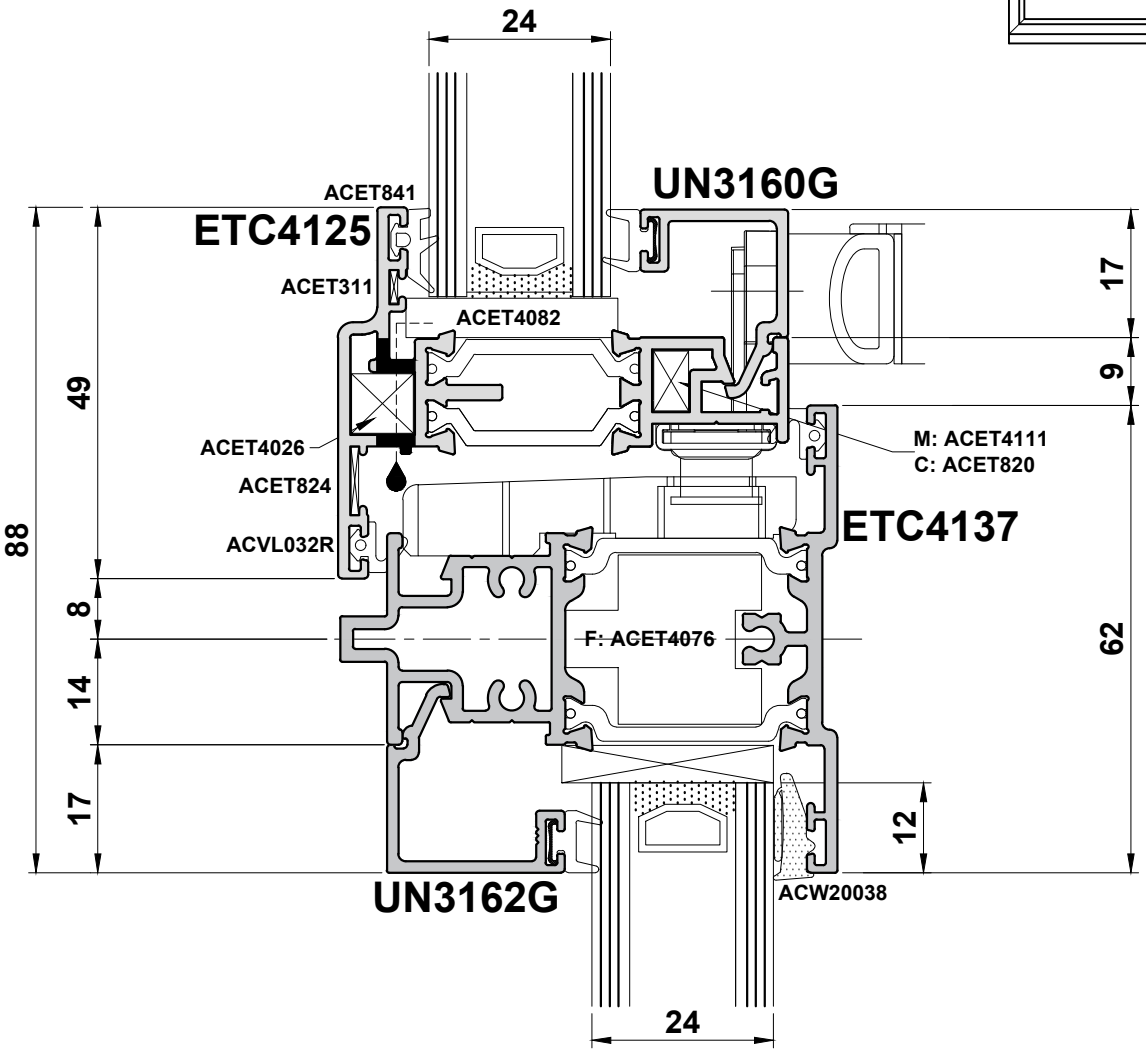

Do Not Scale From This Drawing

Alitherm 400

Detail 6F

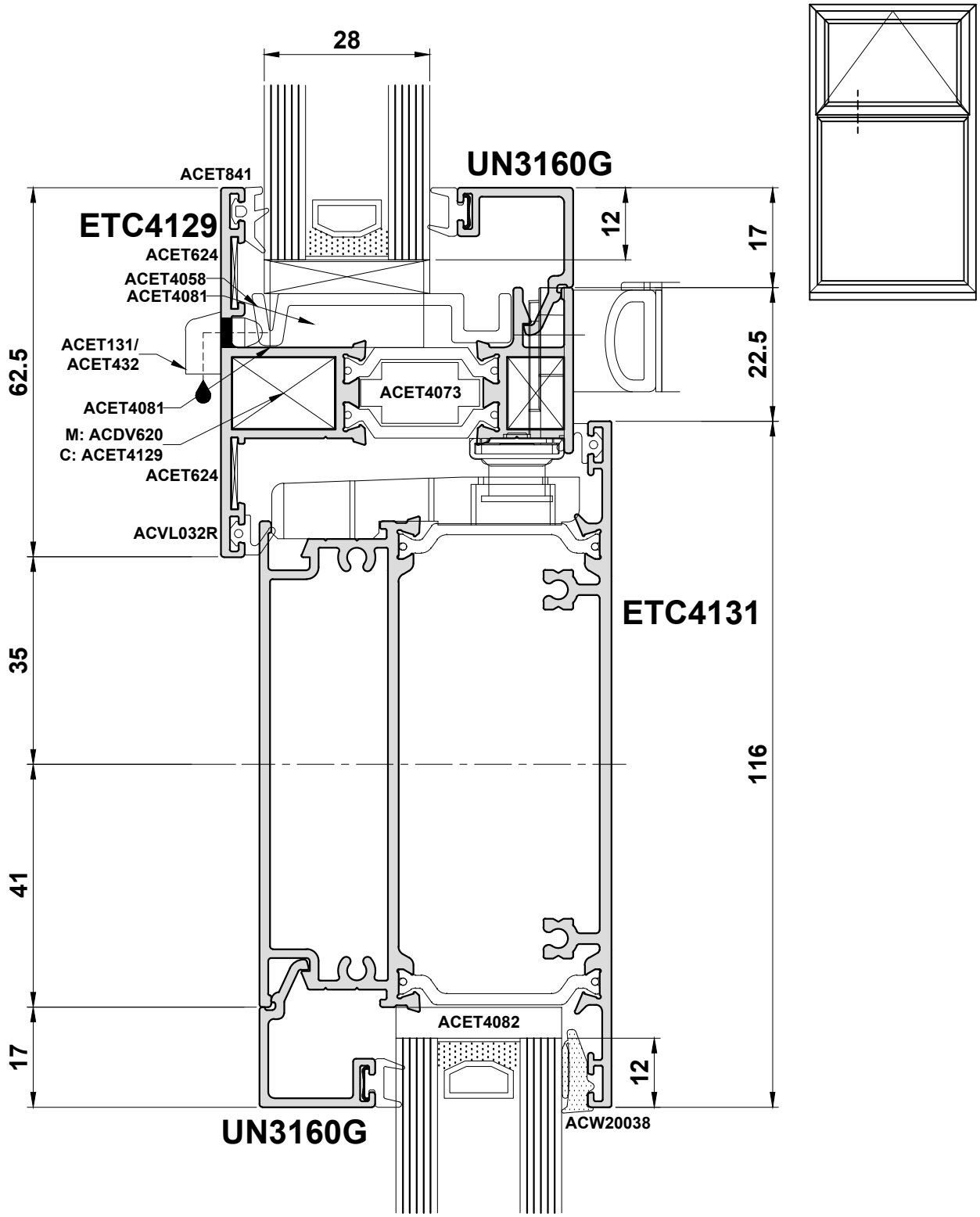

Note: Transoms will drain through the join to the outerframe.

Do Not Scale From This Drawing

ISSUED: JANUARY 2026

Alitherm 400

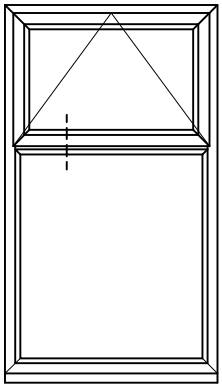

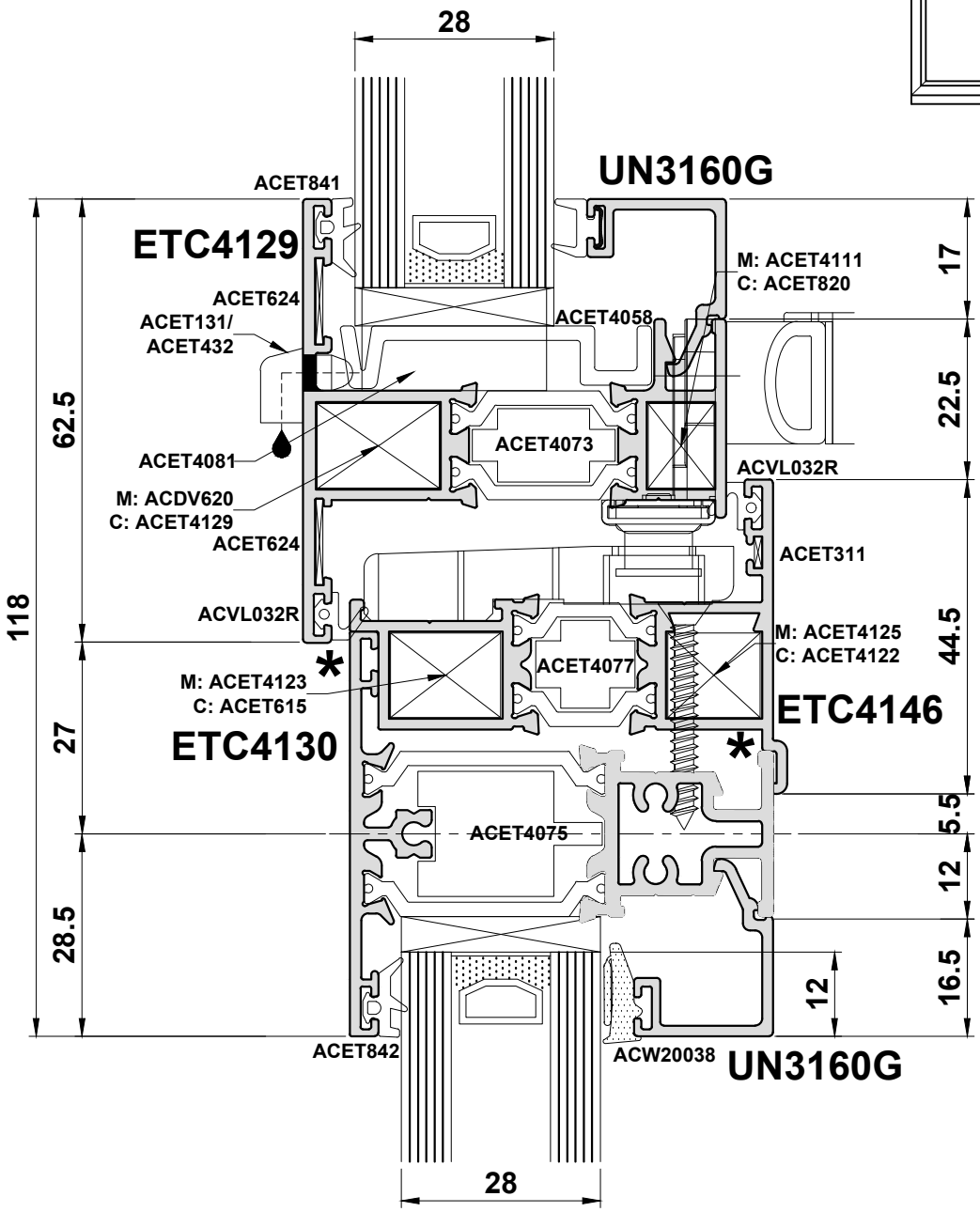

Note: Transoms will drain through the join to the outerframe.

Do Not Scale From This Drawing

Detail 7A

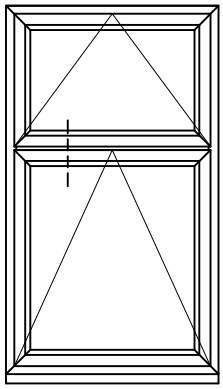

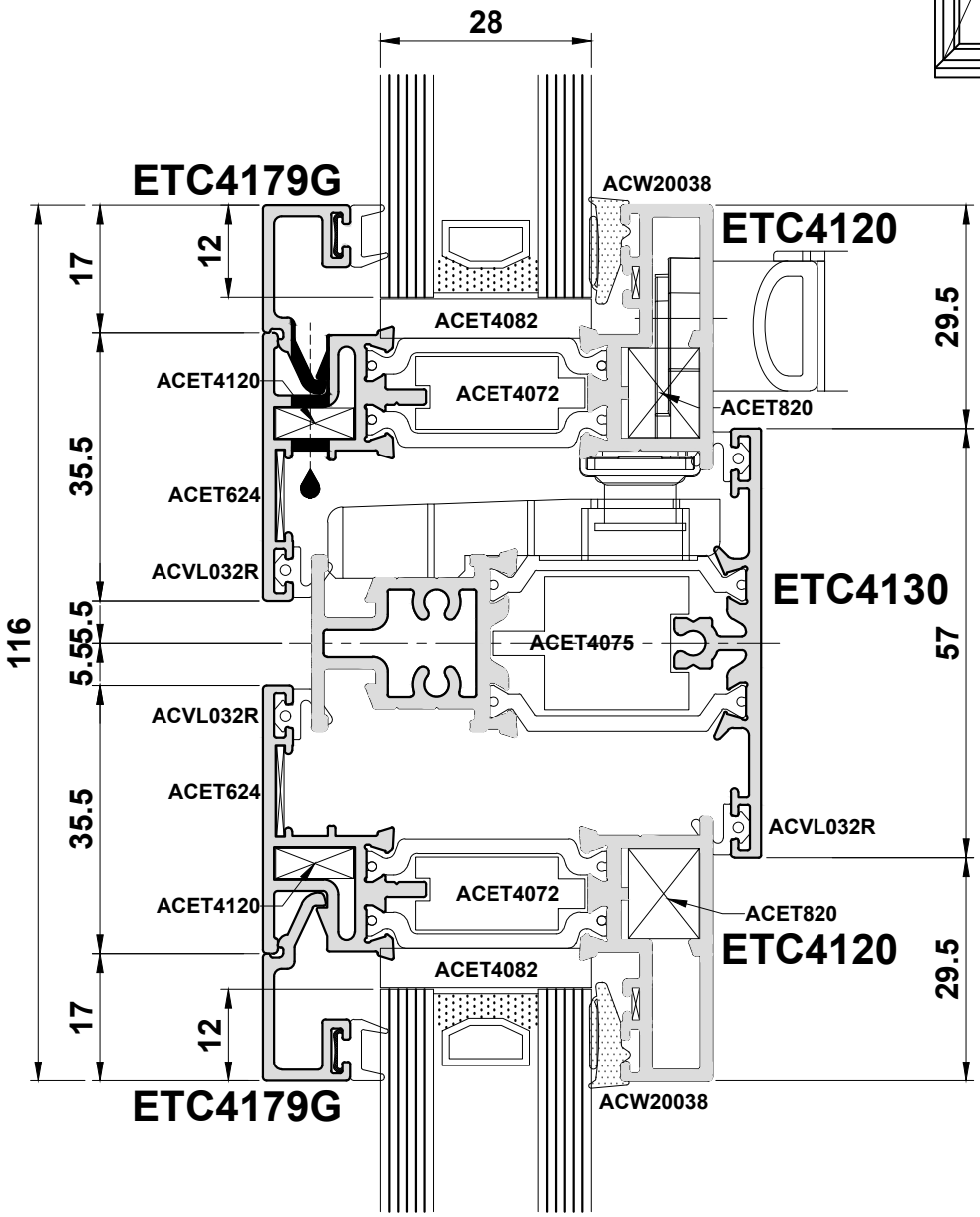

Note: Transoms will drain through the join to the outerframe.

Do Not Scale From This Drawing

ISSUED: JANUARY 2026

Detail 7B

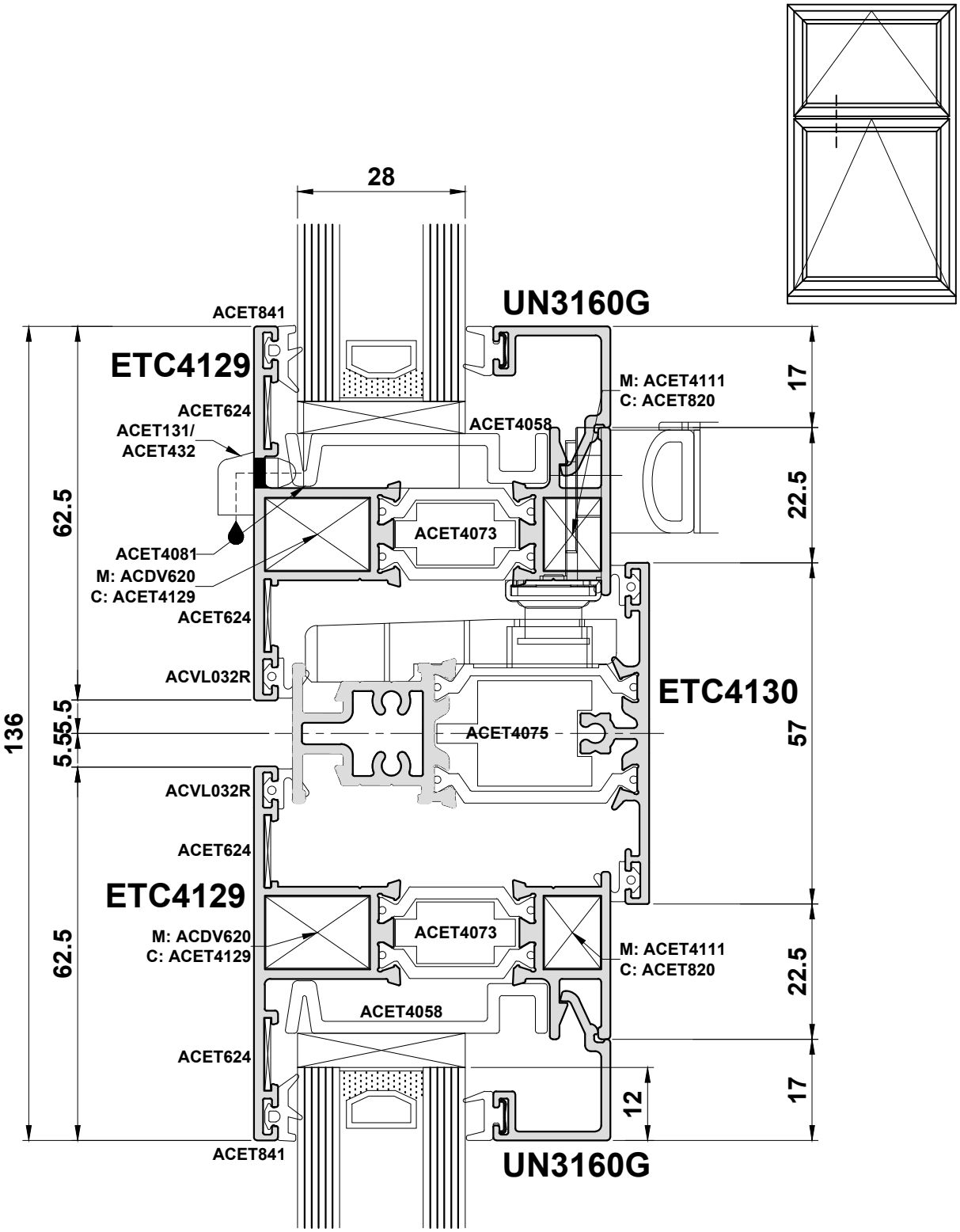

Note: Transoms will drain through the join to the outerframe.

Do Not Scale From This Drawing

Alitherm 400

Detail 7C

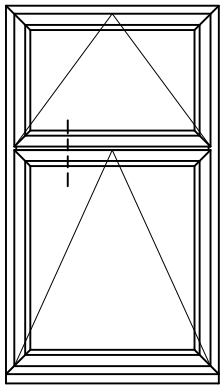

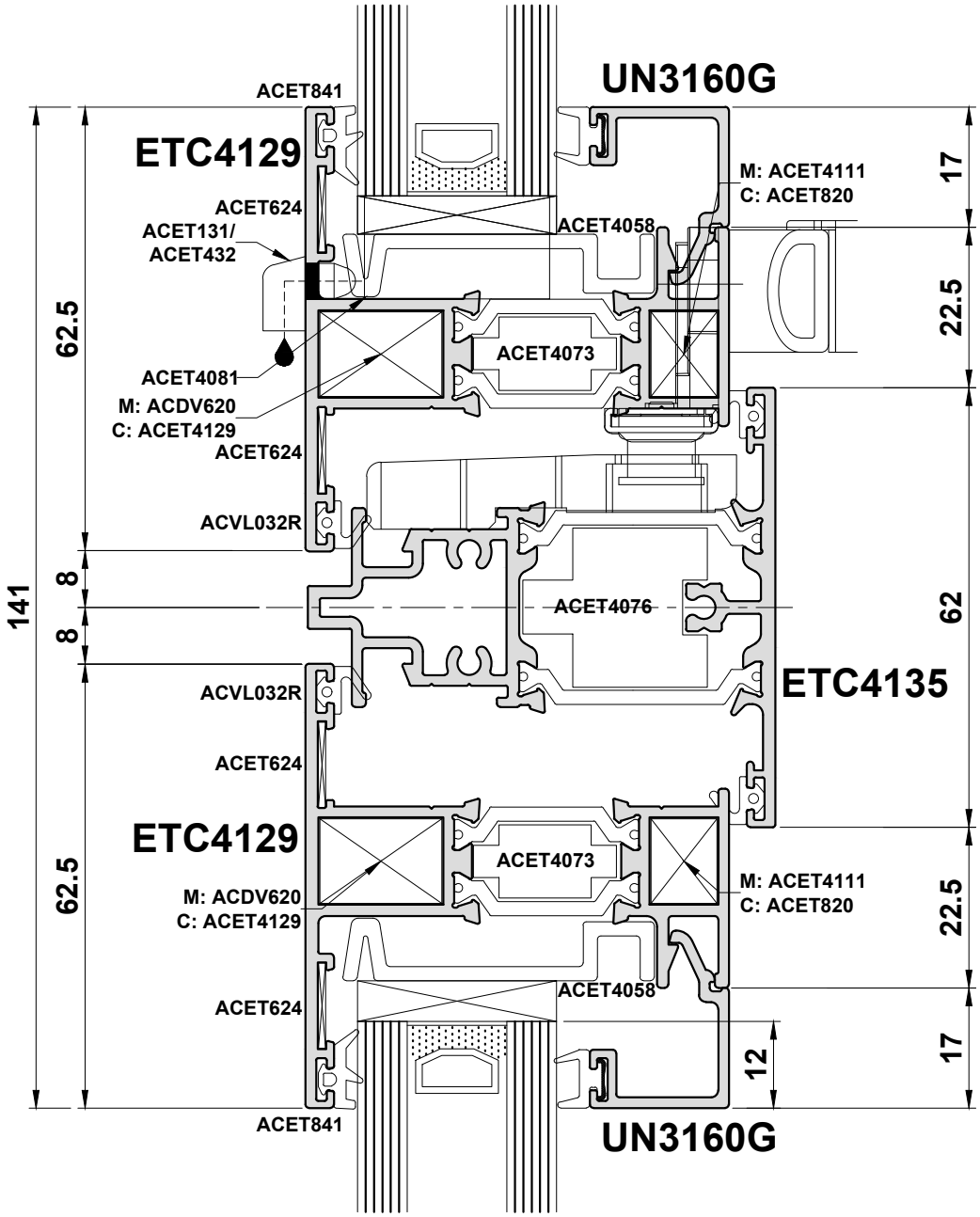

Note: Transoms will drain through the join to the outerframe.

Do Not Scale From This Drawing

ISSUED: JANUARY 2026

Detail 7D

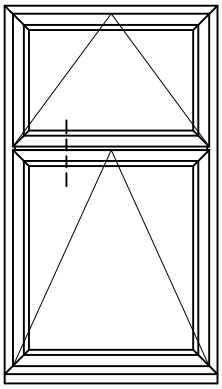

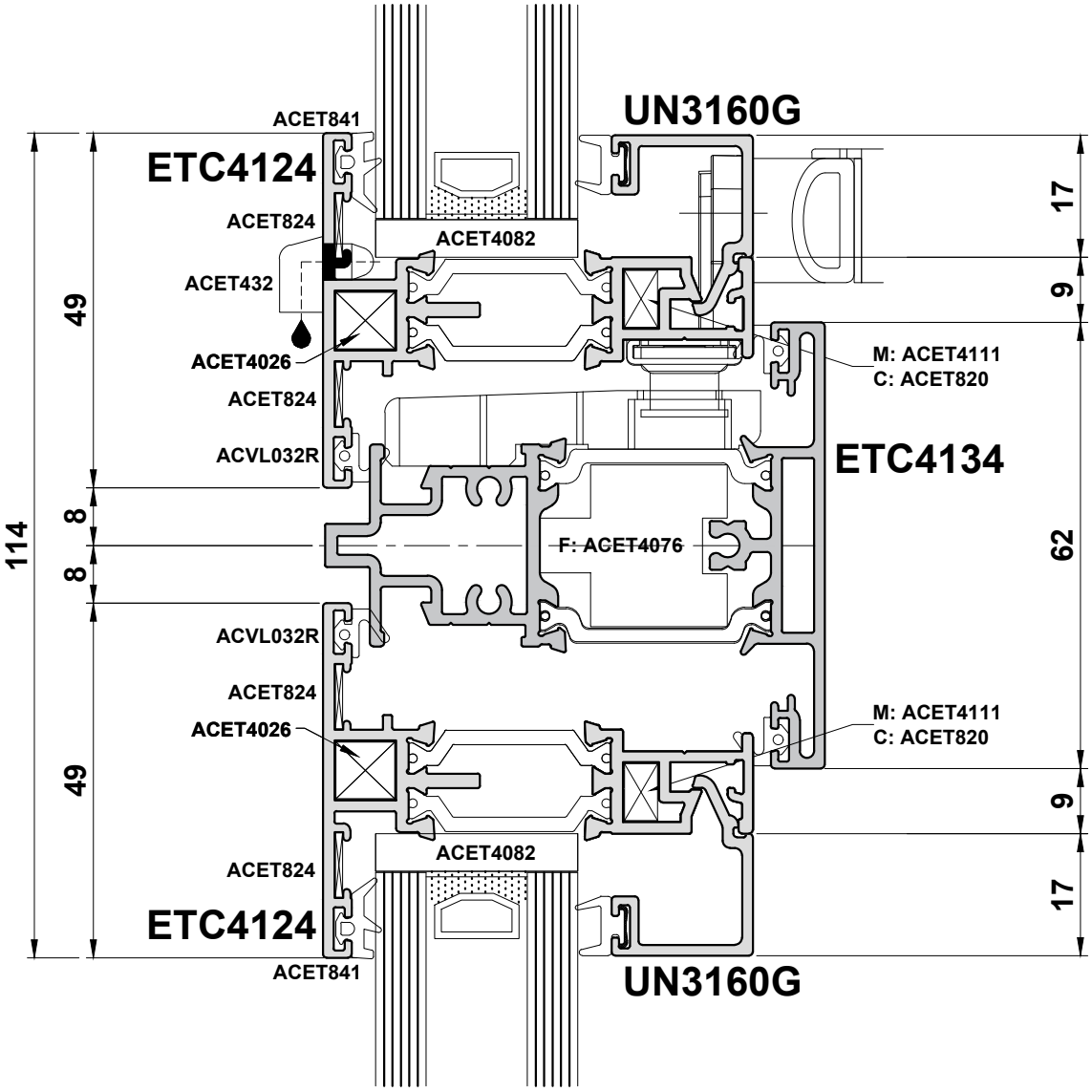

Do Not Scale From This Drawing

Detail 7E

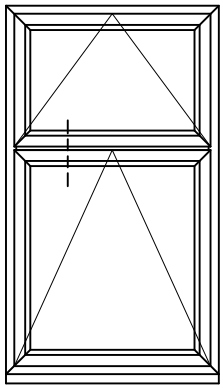

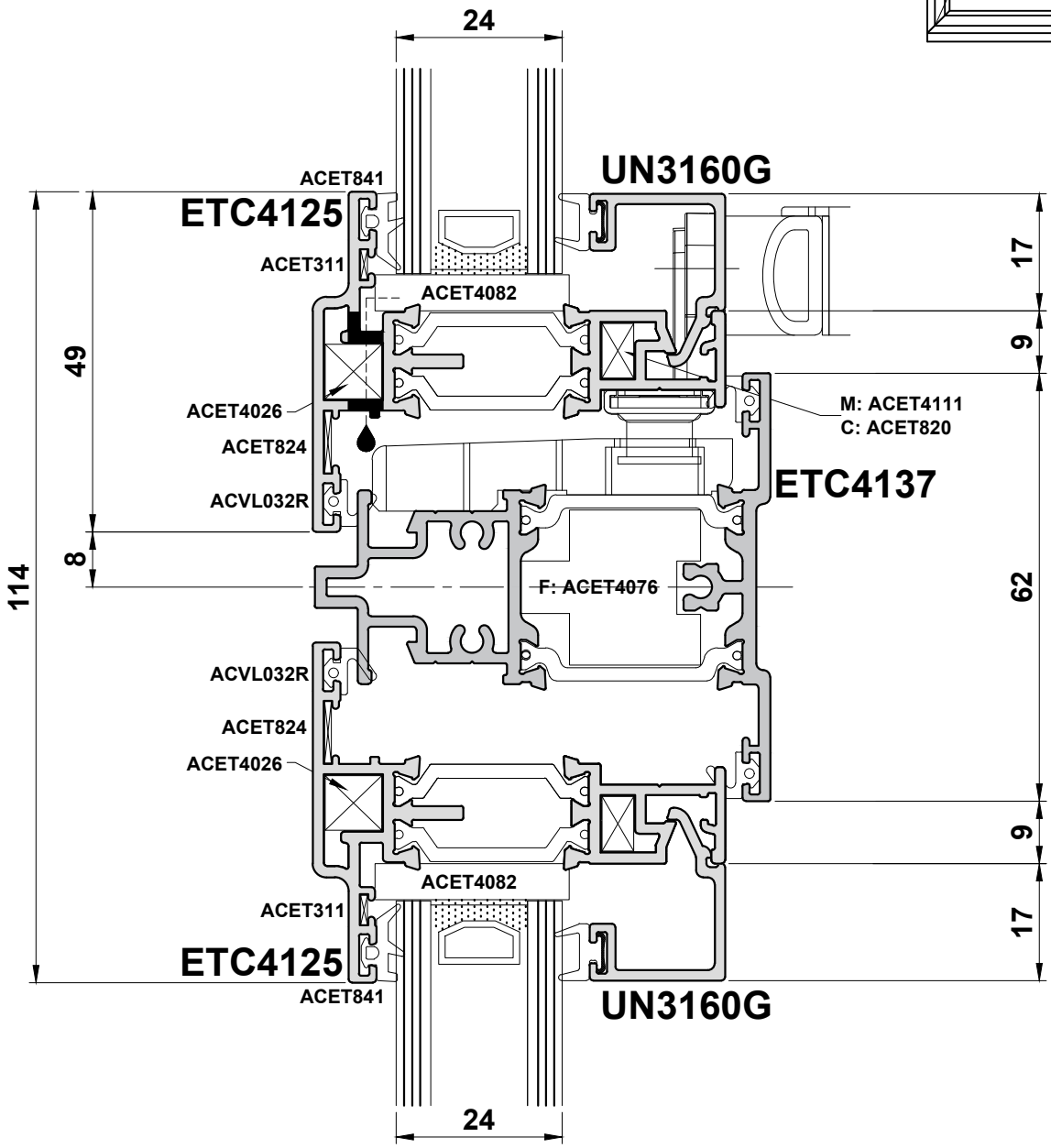

Do Not Scale From This Drawing

ISSUED: JANUARY 2026

Detail 8A

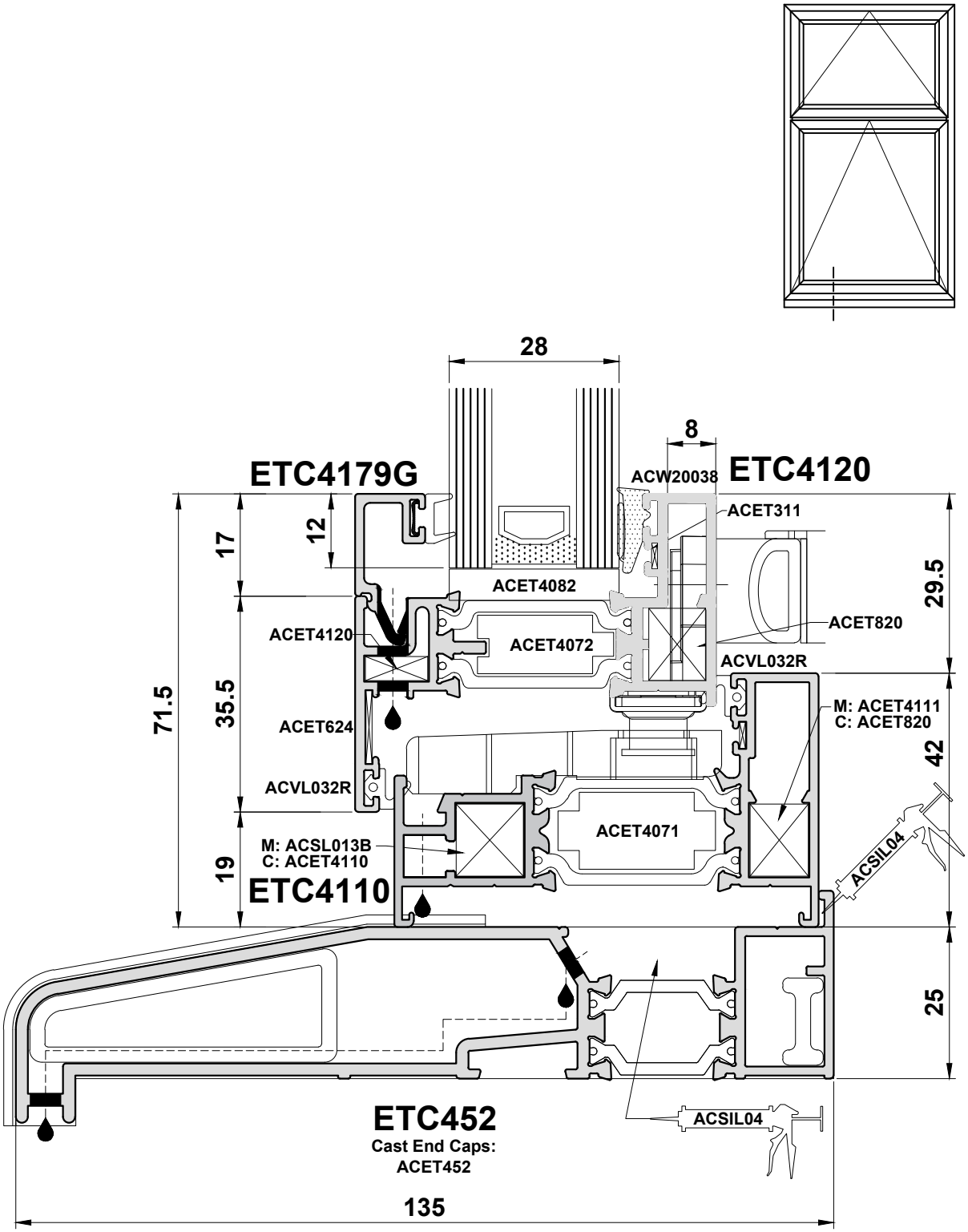

Cill end caps should be sealed to cill to prevent water egress over edge

Do Not Scale From This Drawing

Detail 8B

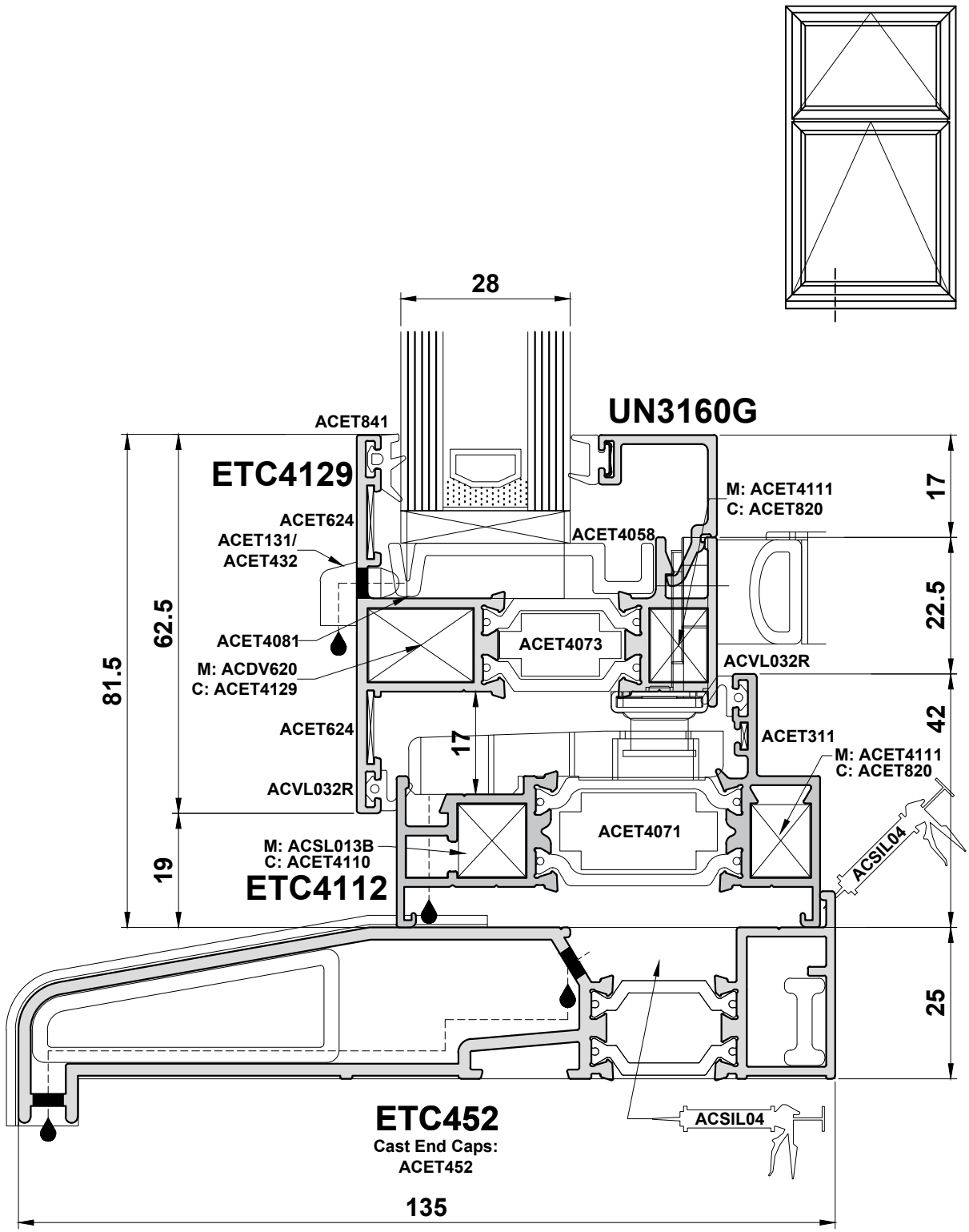

Cill end caps should be sealed to cill to prevent water egress over edge

Do Not Scale From This Drawing

Detail 8C

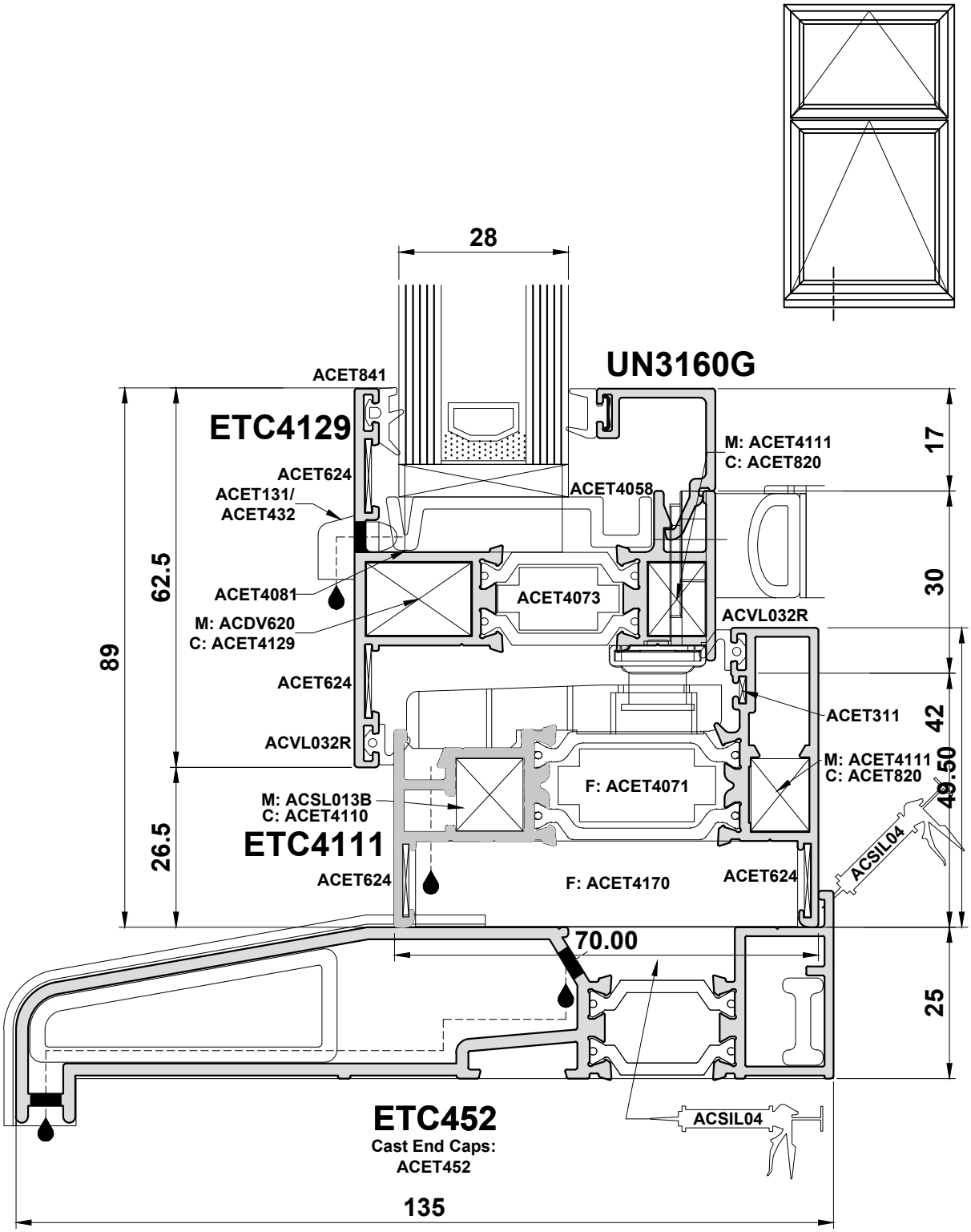

Cill end caps should be sealed to cill to prevent water egress over edge

Do Not Scale From This Drawing

Detail 8D

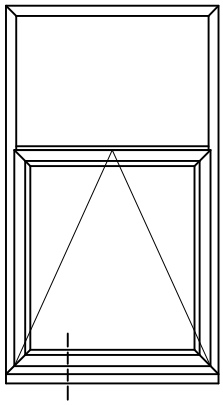

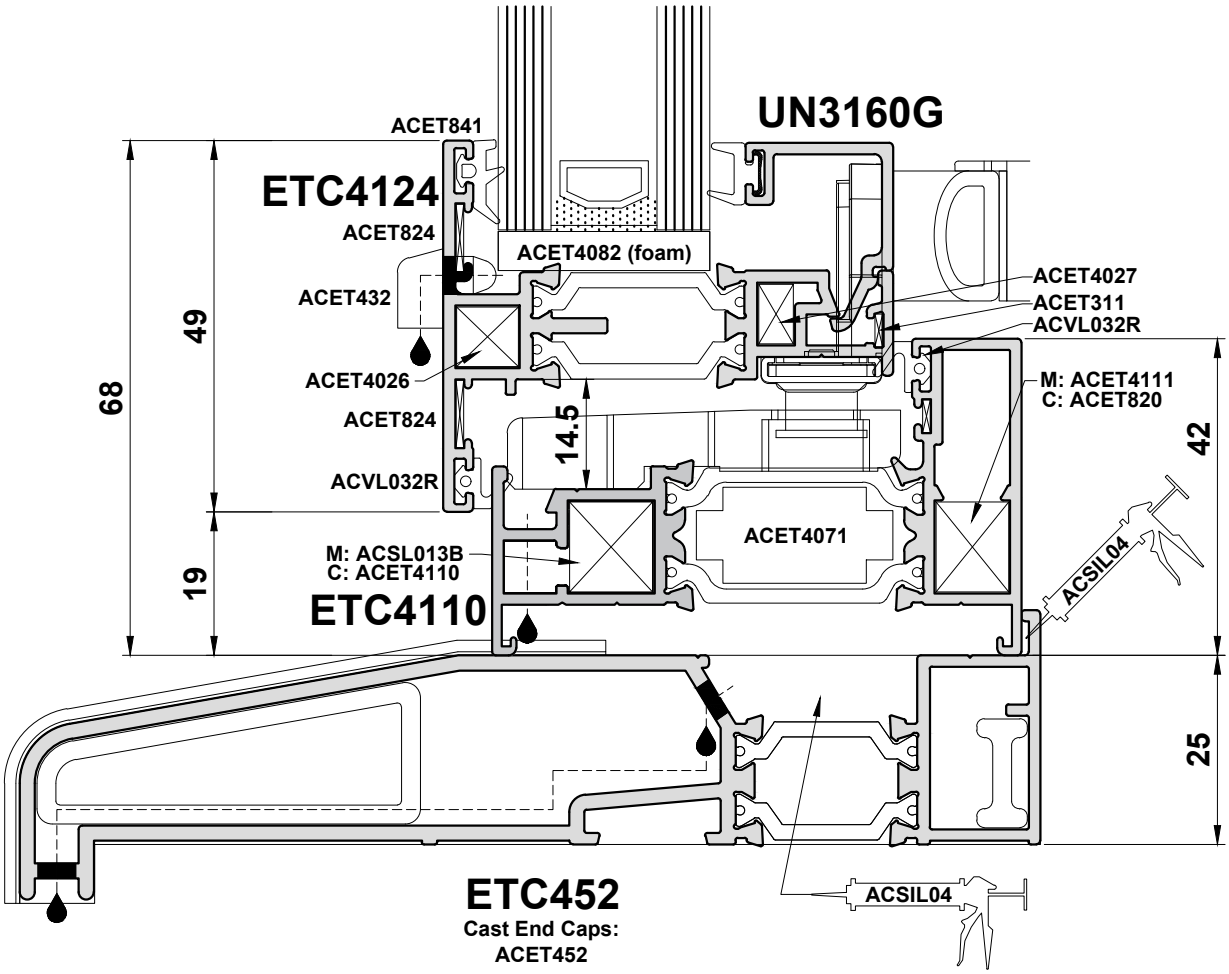

Cill end caps should be sealed to cill to prevent water egress over edge

Do Not Scale From This Drawing

ISSUED: JANUARY 2026

Detail 8E

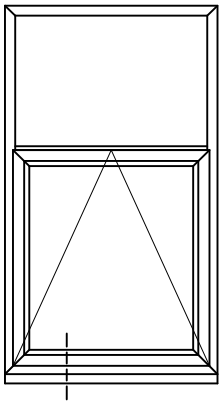

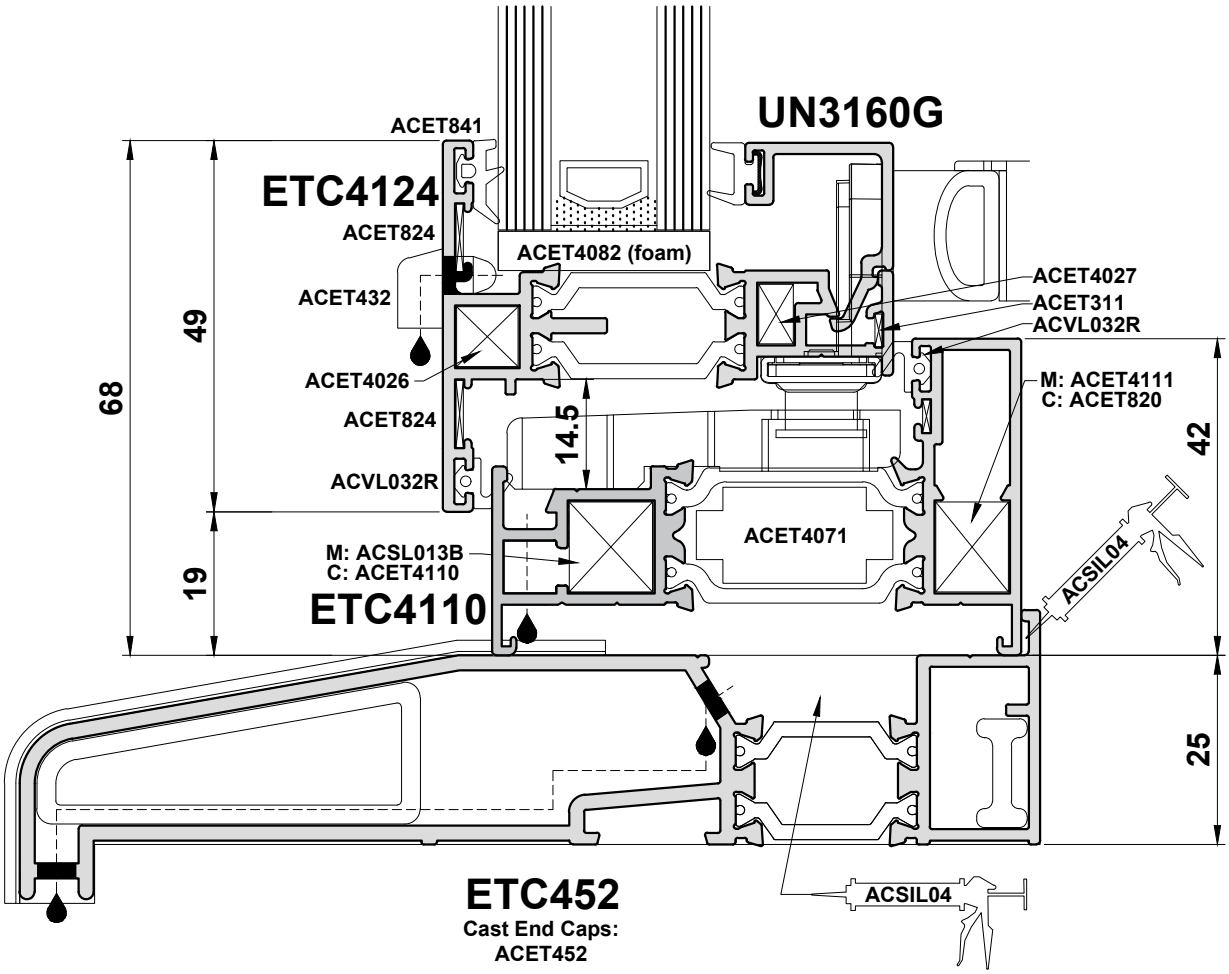

Cill end caps should be sealed to cill to prevent water egress over edge

Do Not Scale From This Drawing

Alitherm 400

Detail 8F

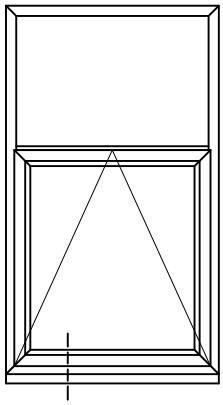

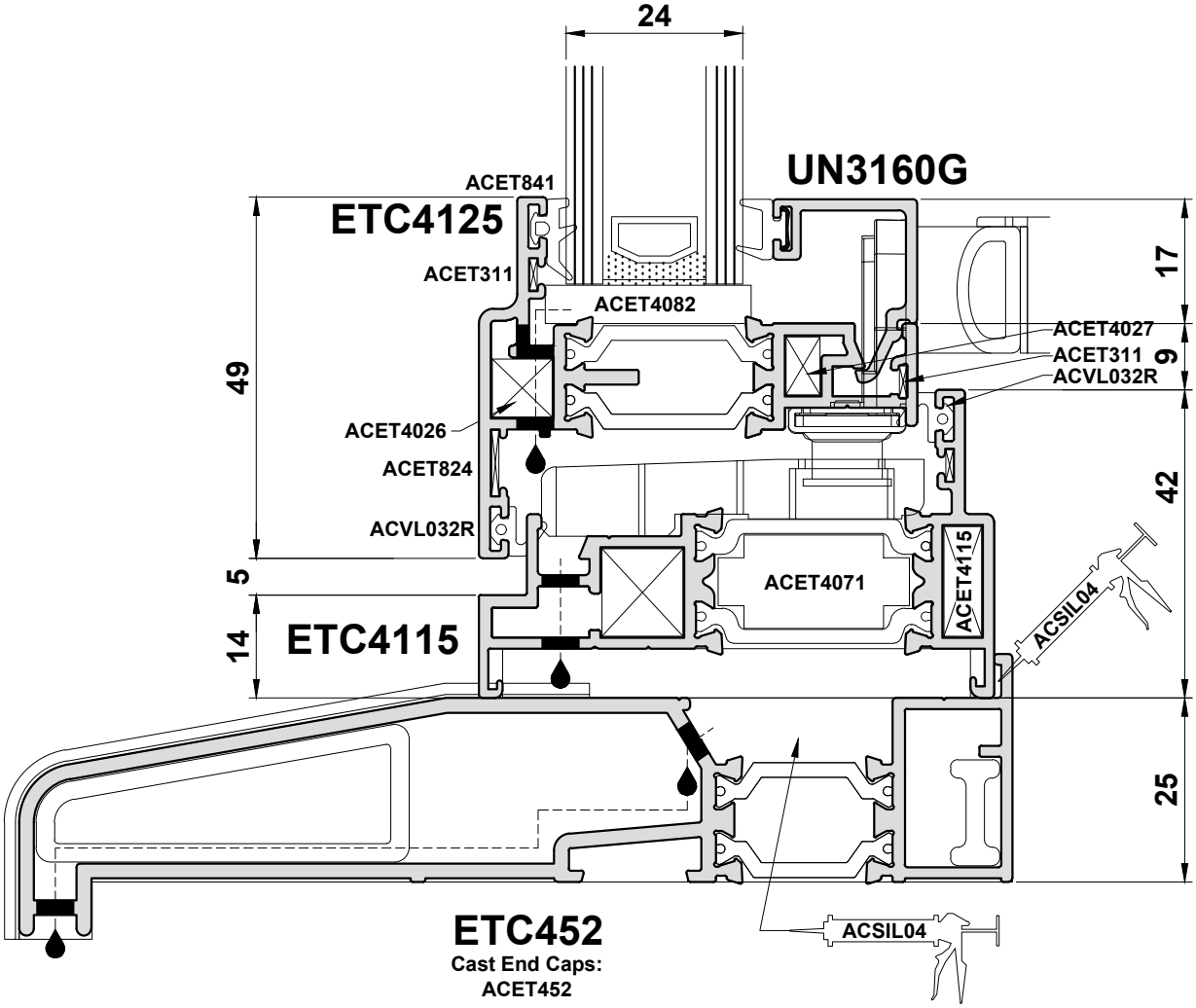

Do Not Scale From This Drawing

ISSUED: JANUARY 2026

Detail 8G

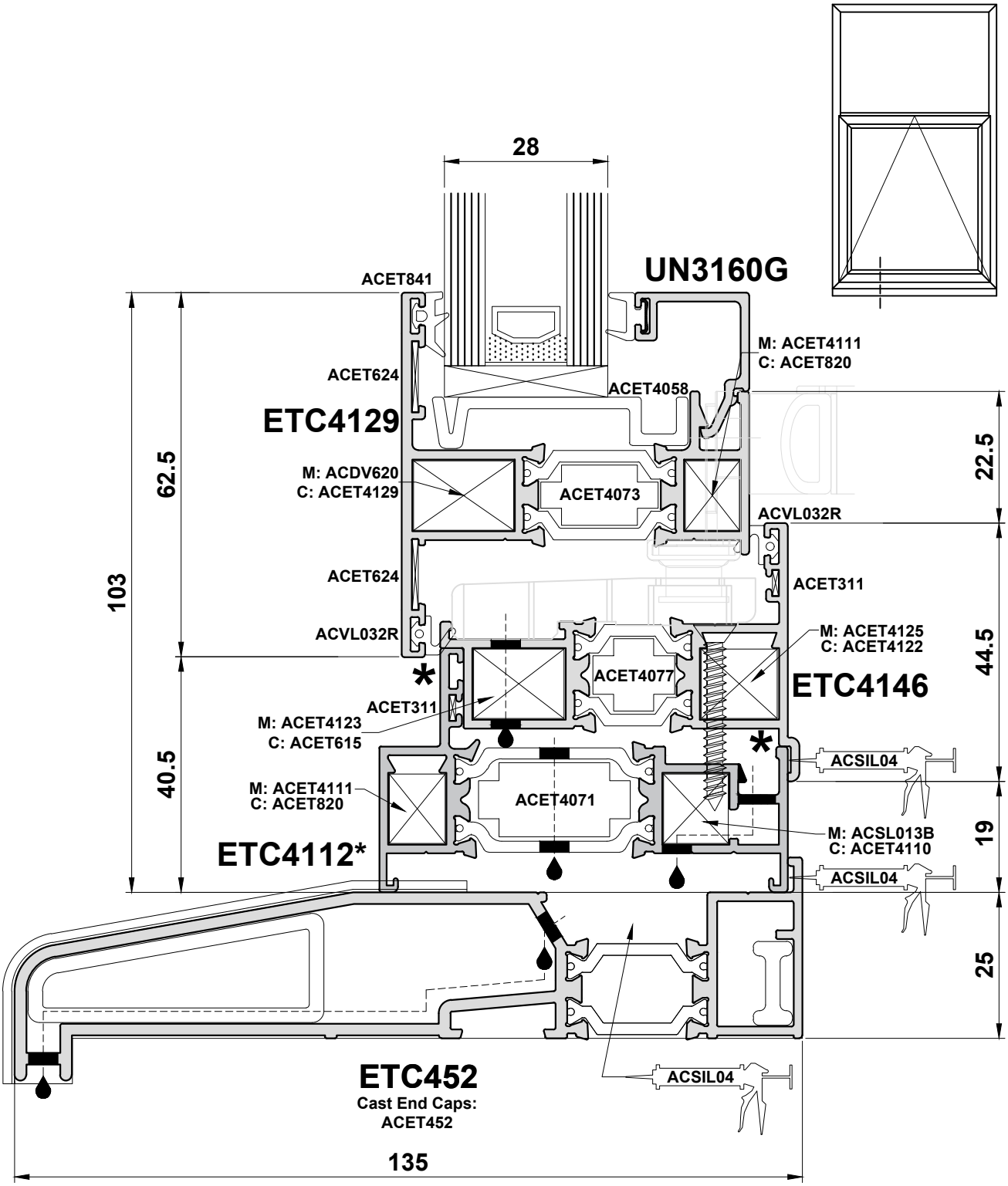

*Note: Where ETC4146 is used, concealed drainage through a cill is required.
Cill end caps should be sealed to cill to prevent water egress over edge.

Do Not Scale From This Drawing

Alitherm 400

Detail 8H

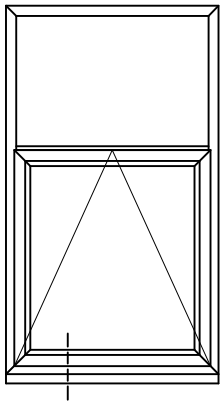

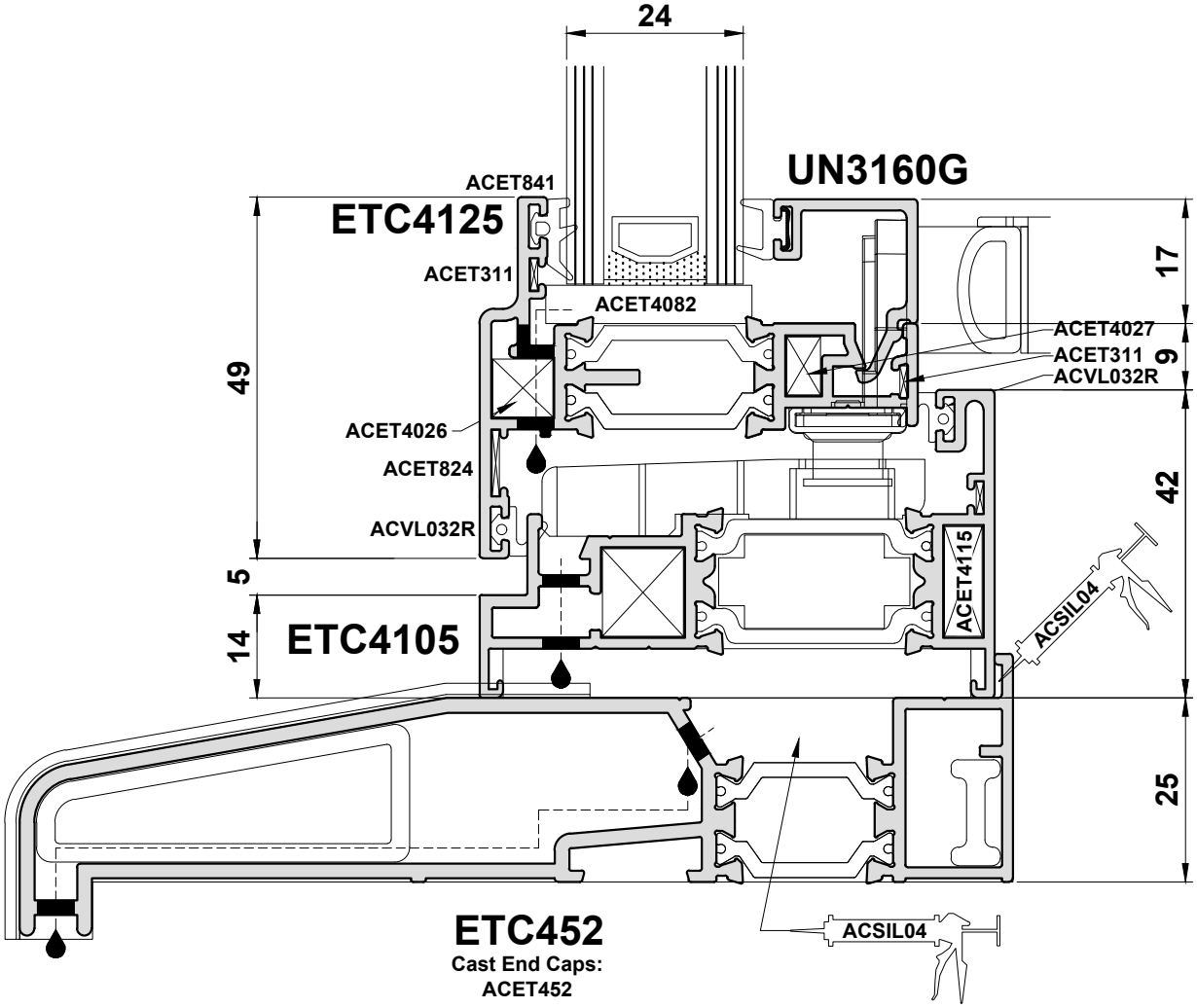

Do Not Scale From This Drawing

ISSUED: JANUARY 2026

Detail 8I

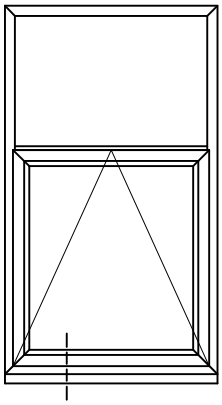

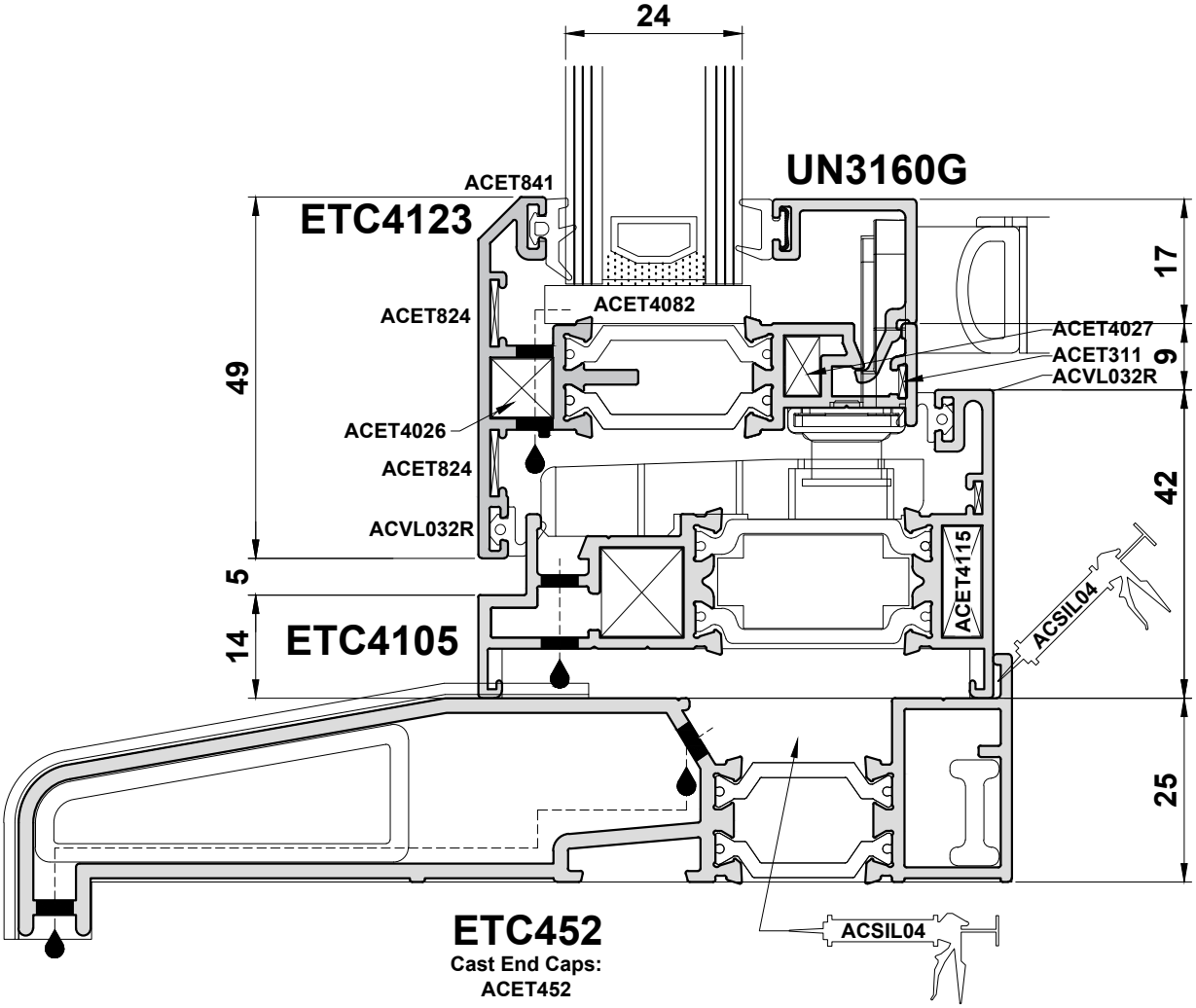

Do Not Scale From This Drawing

Detail 8J

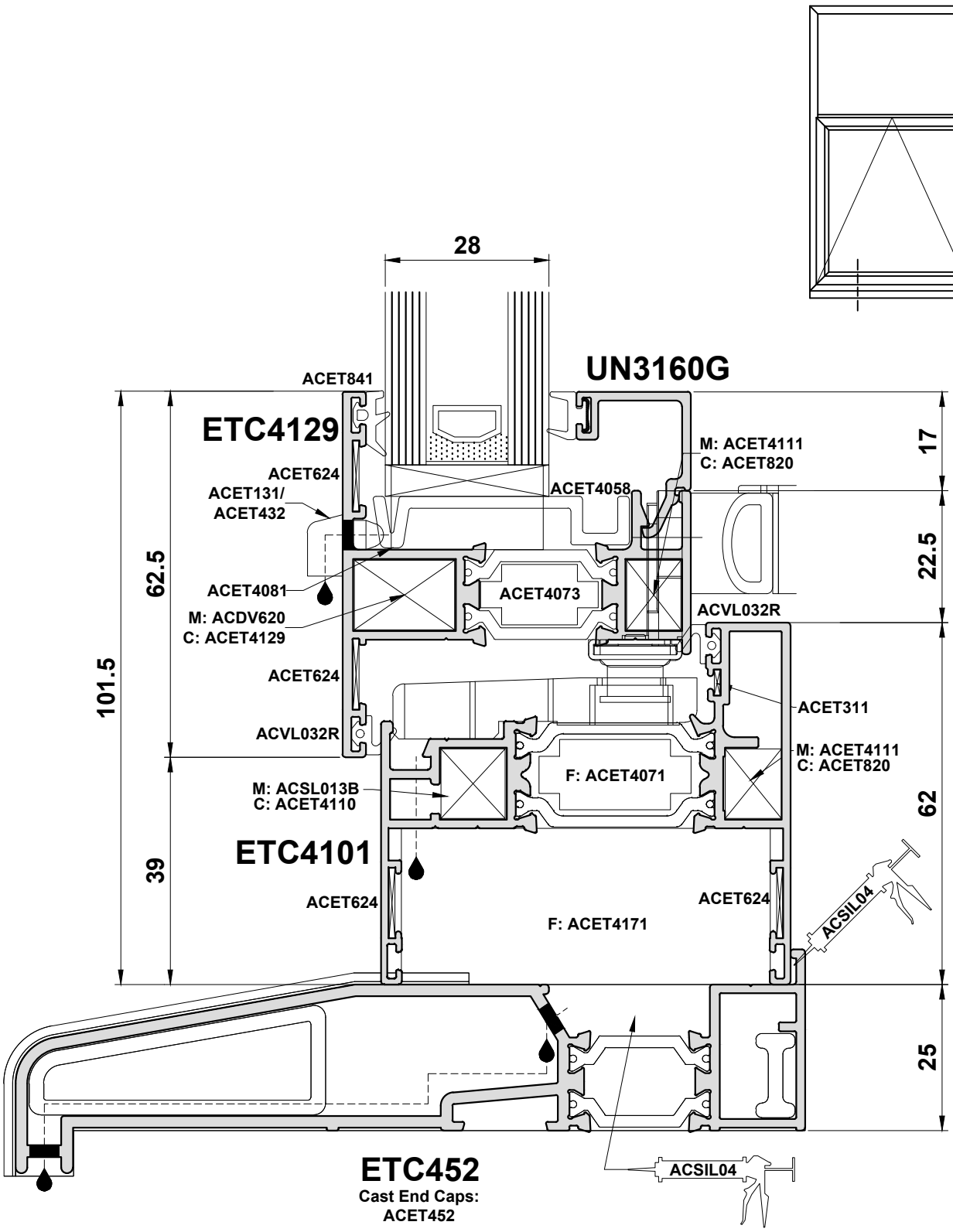

Do Not Scale From This Drawing

ISSUED: JANUARY 2026

Detail 9A

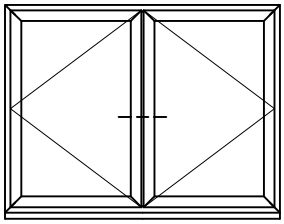

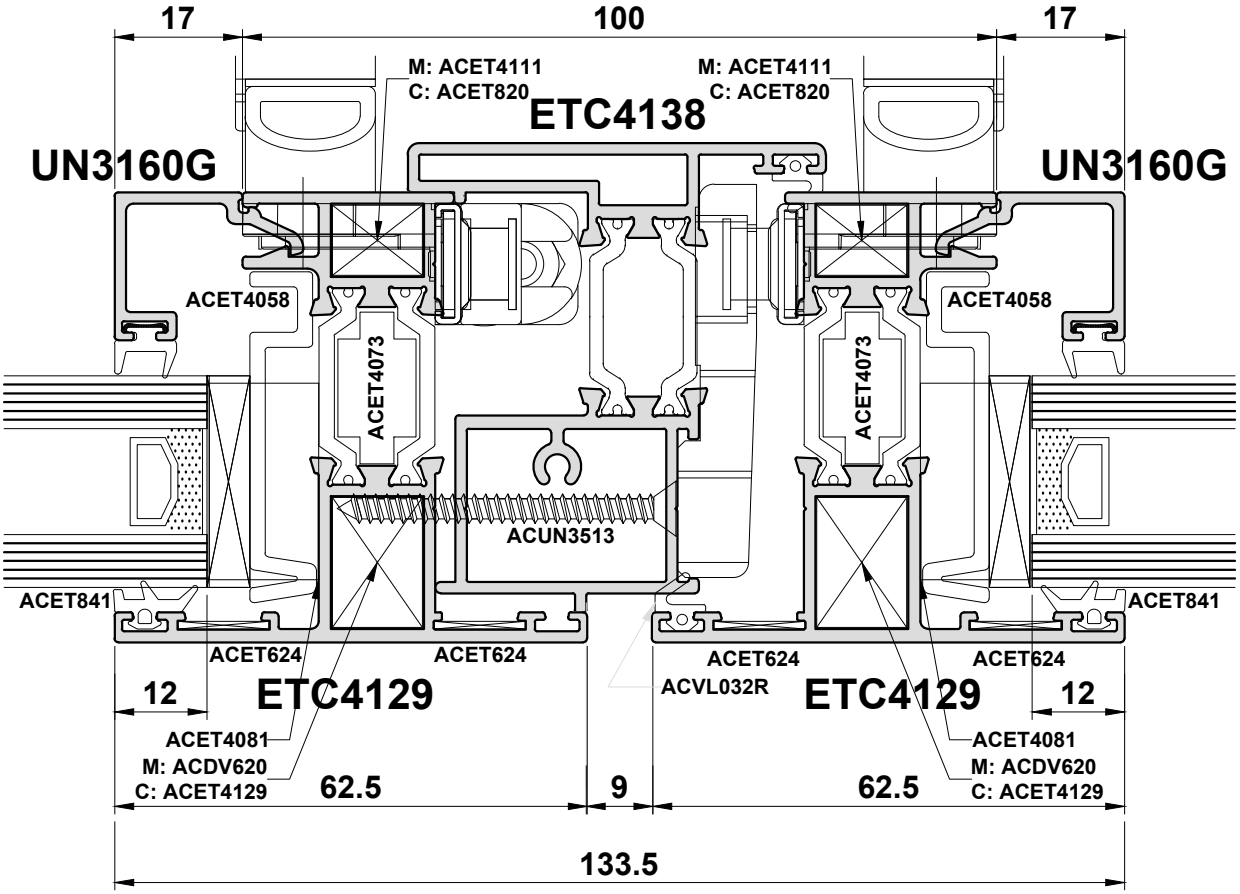

Do Not Scale From This Drawing

Detail 9B

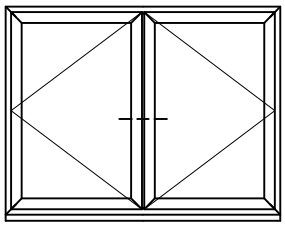

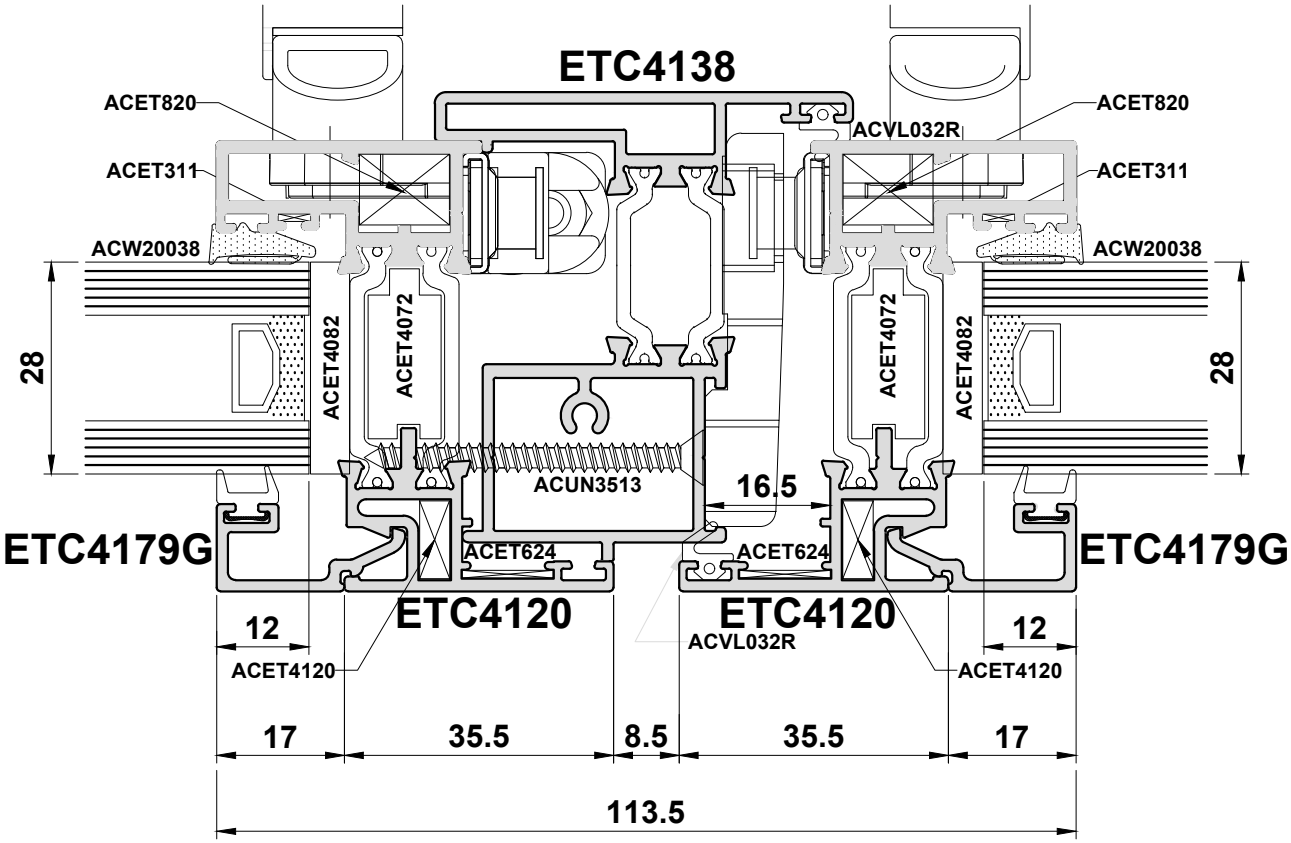

Do Not Scale From This Drawing

Detail 9C

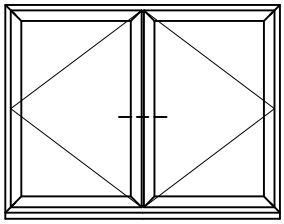

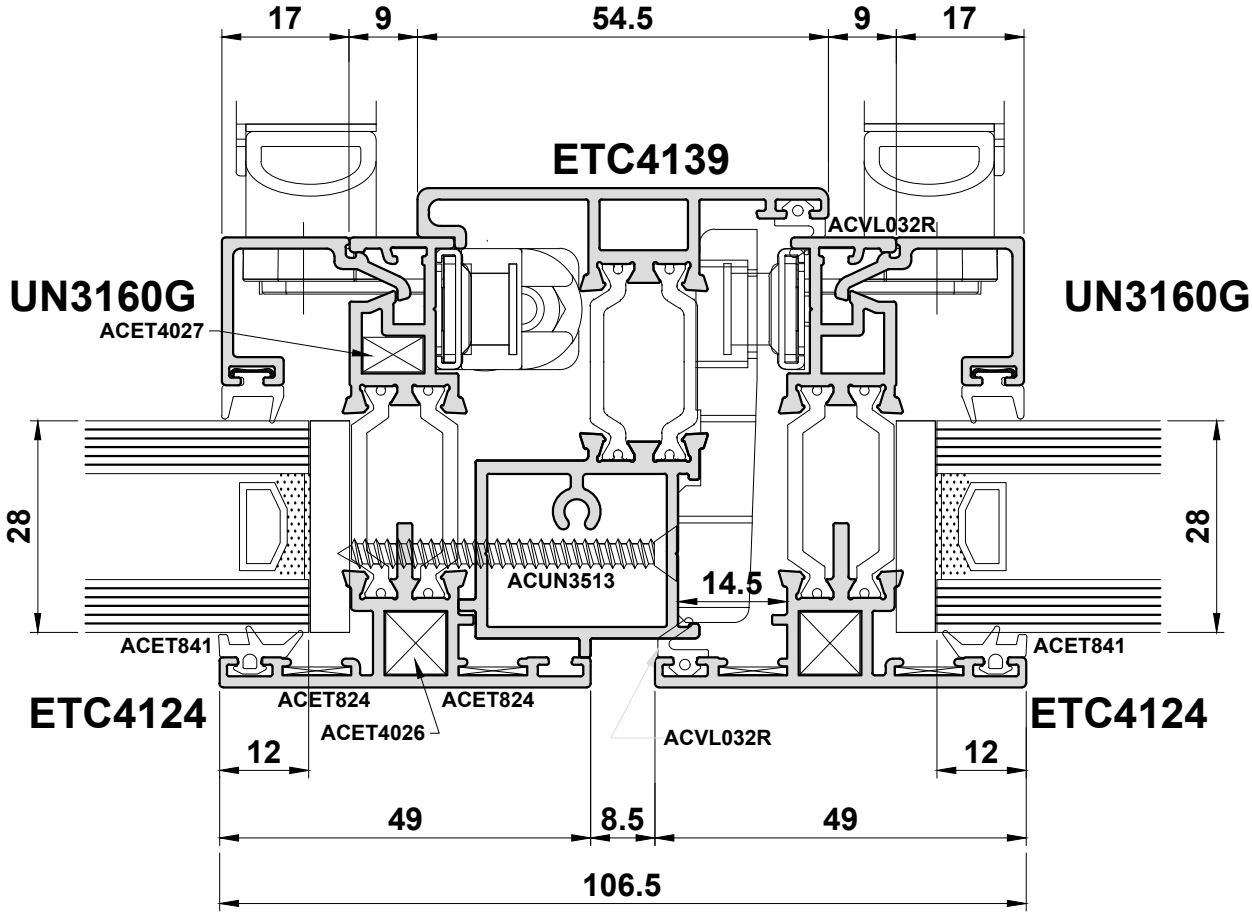

Do Not Scale From This Drawing

Detail 9D

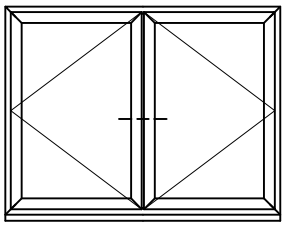

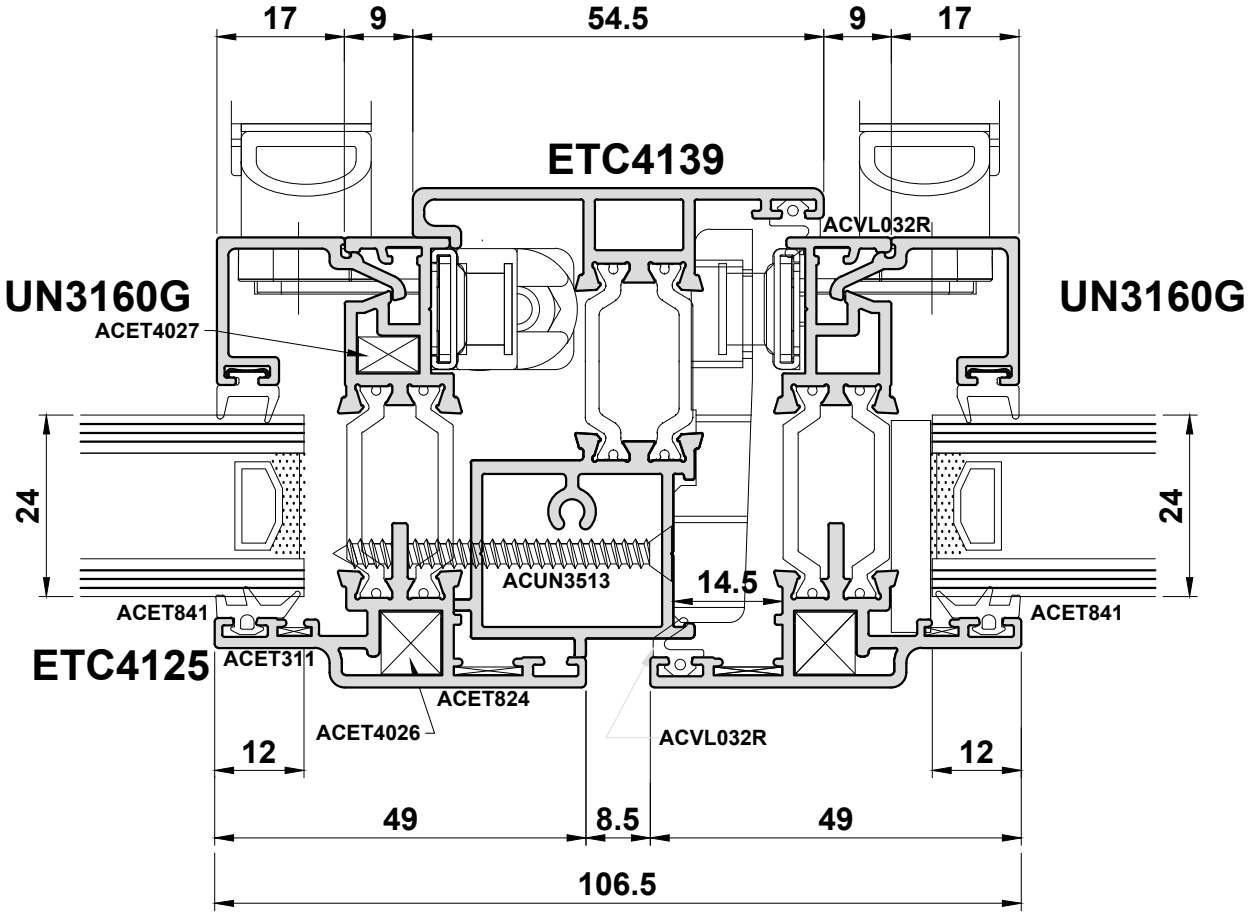

Do Not Scale From This Drawing

Detail 10A

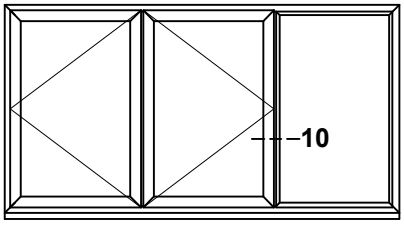

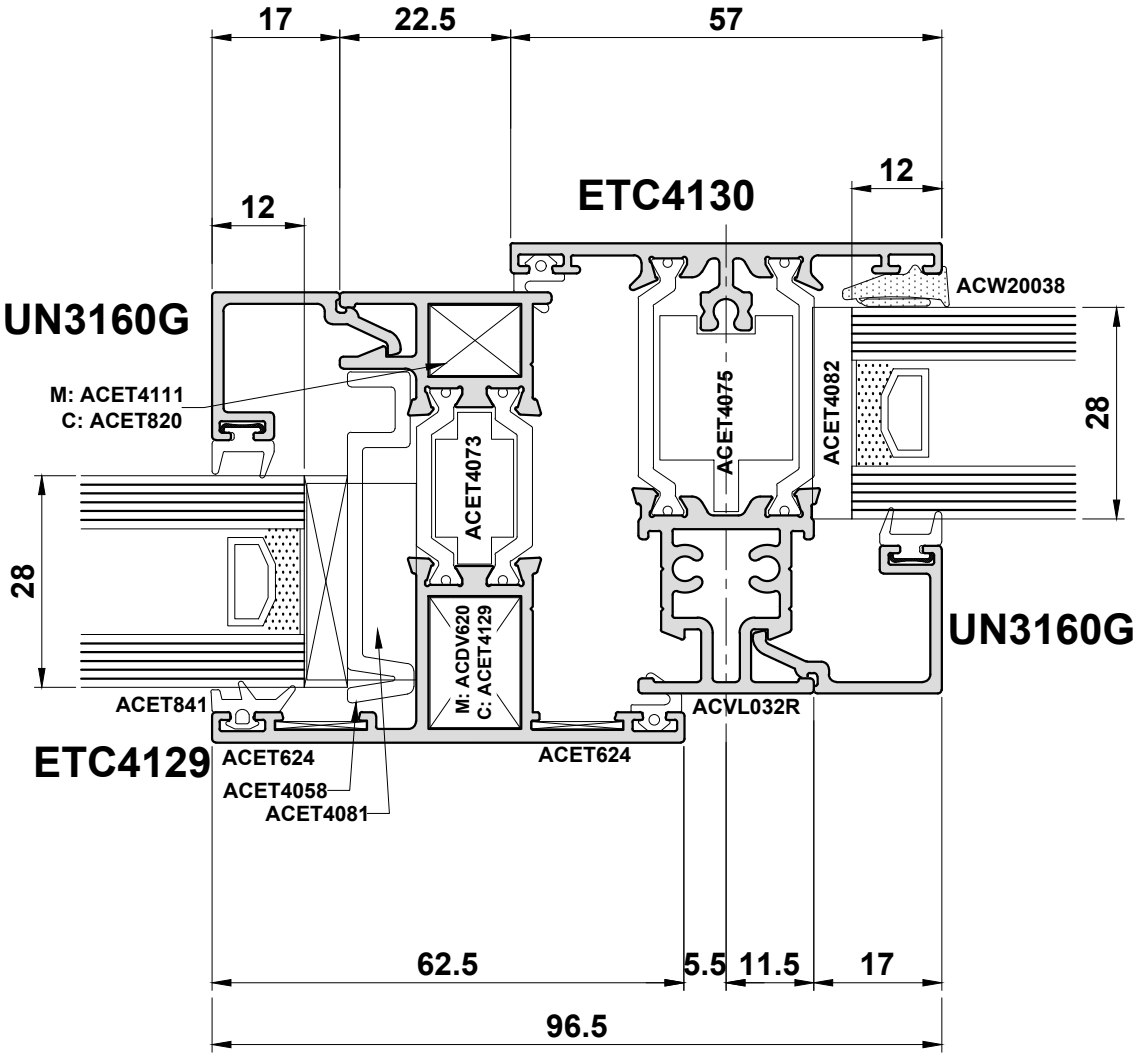

Do Not Scale From This Drawing

Detail 10B

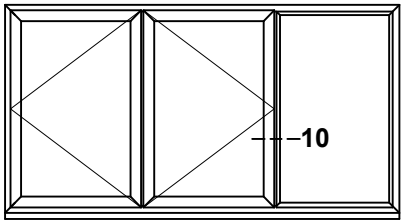

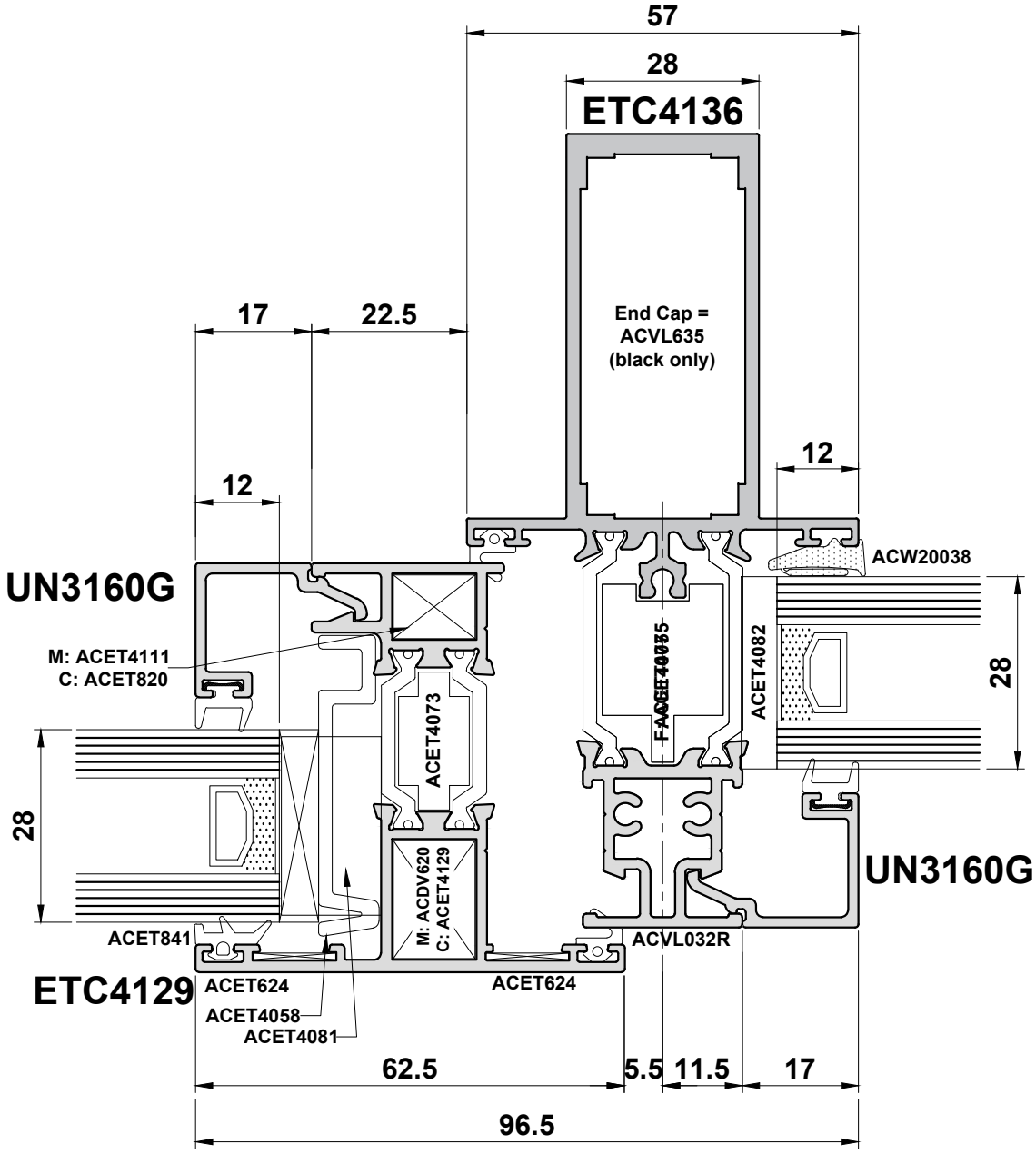

Do Not Scale From This Drawing

Detail 10C

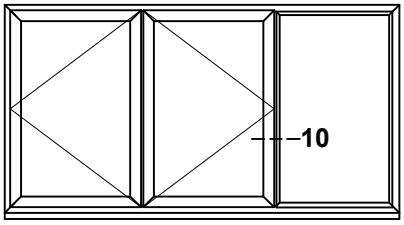

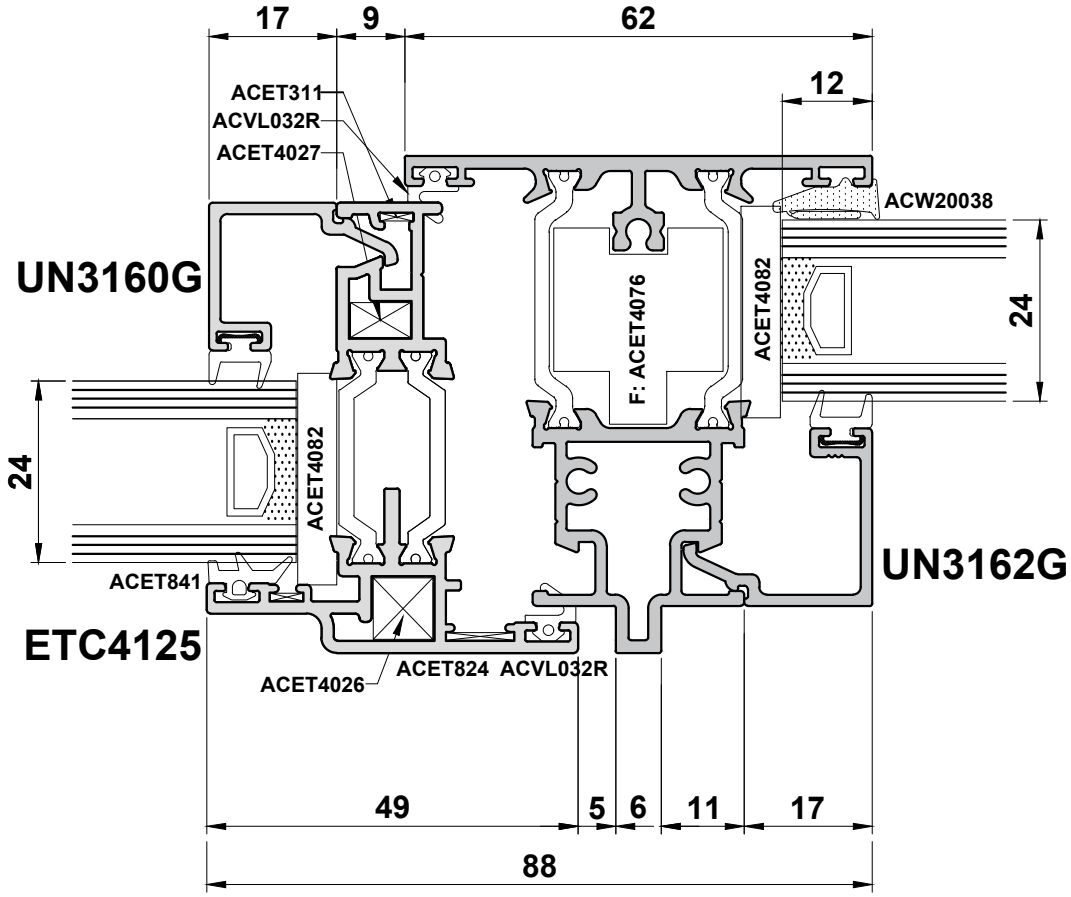

Do Not Scale From This Drawing

Alitherm 400

Detail 10D

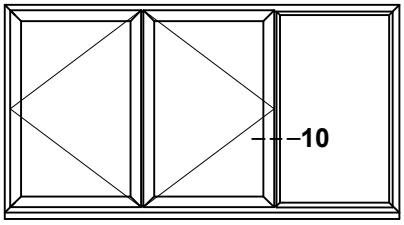

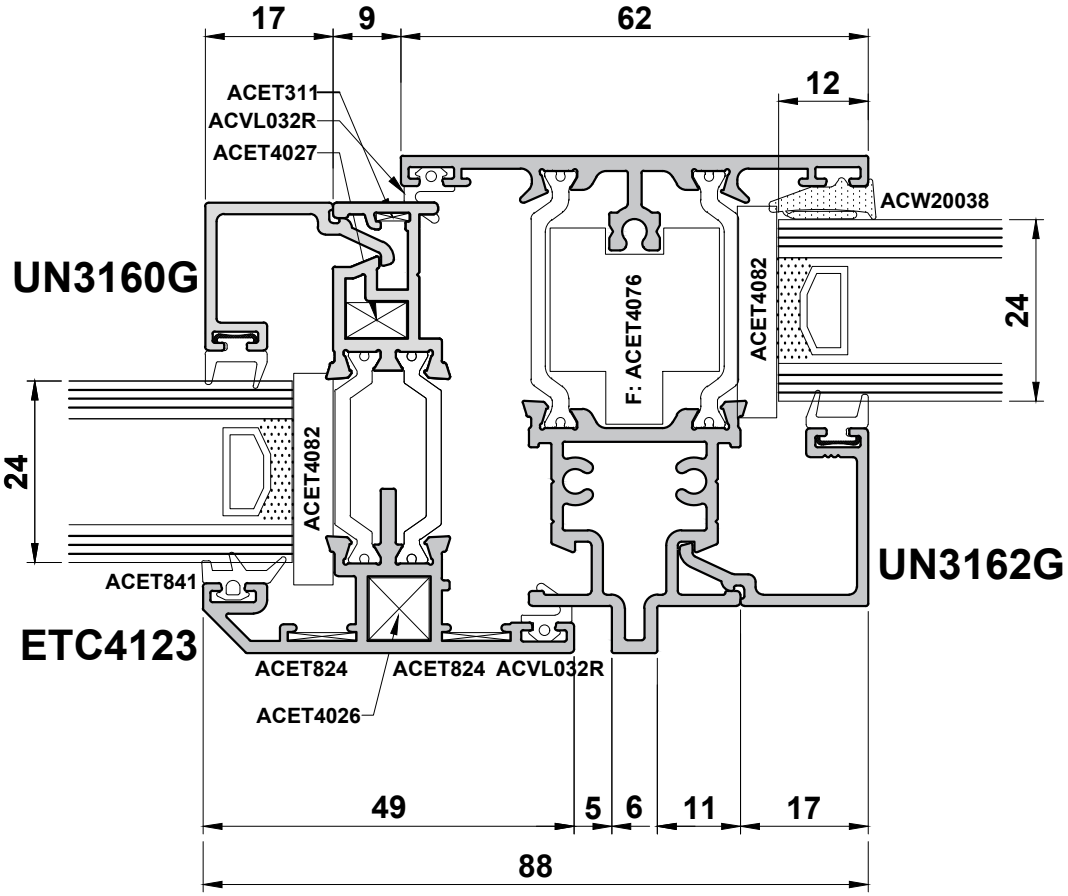

Do Not Scale From This Drawing

ISSUED: JANUARY 2026

Scale Elevations - Internally Glazed

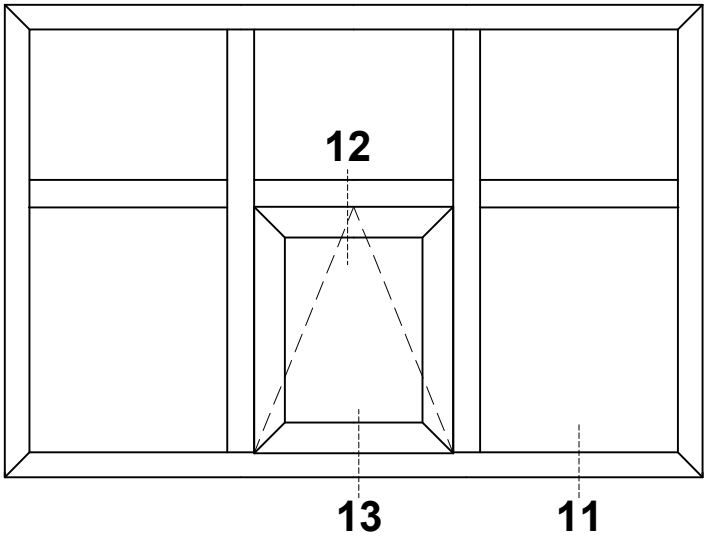

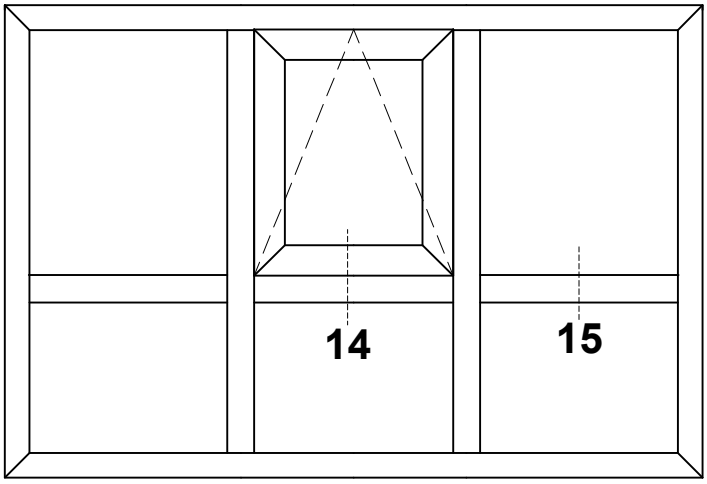

Do Not Scale From This Drawing

Detail 11

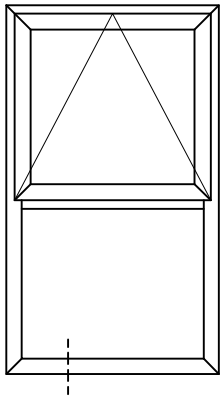

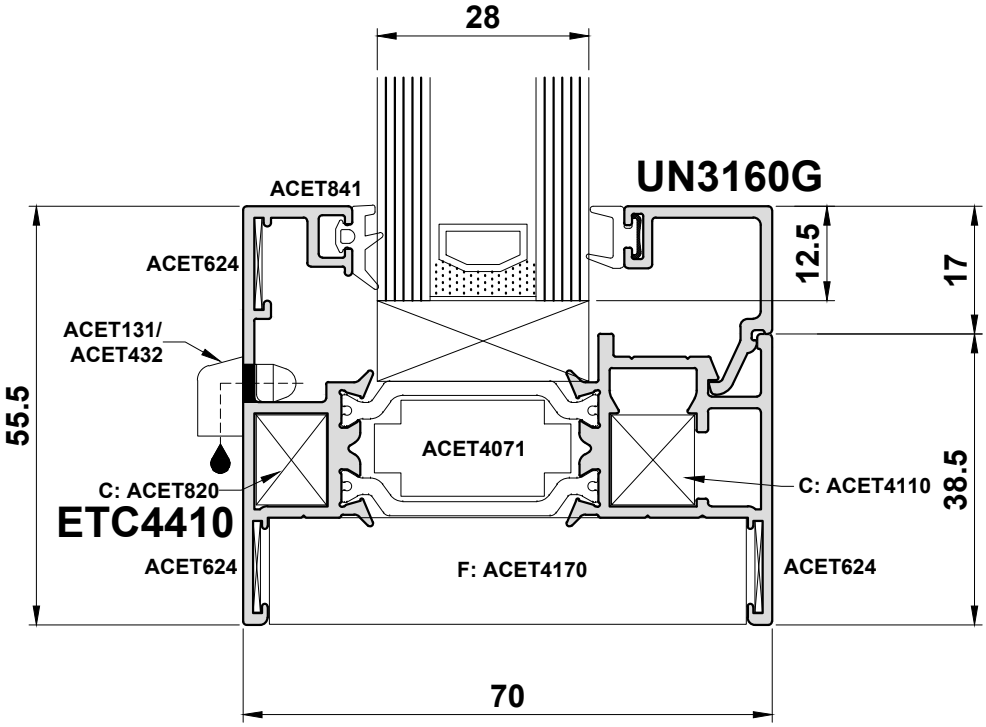

Do Not Scale From This Drawing

Detail 12

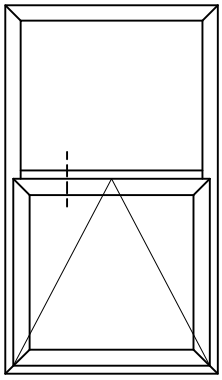

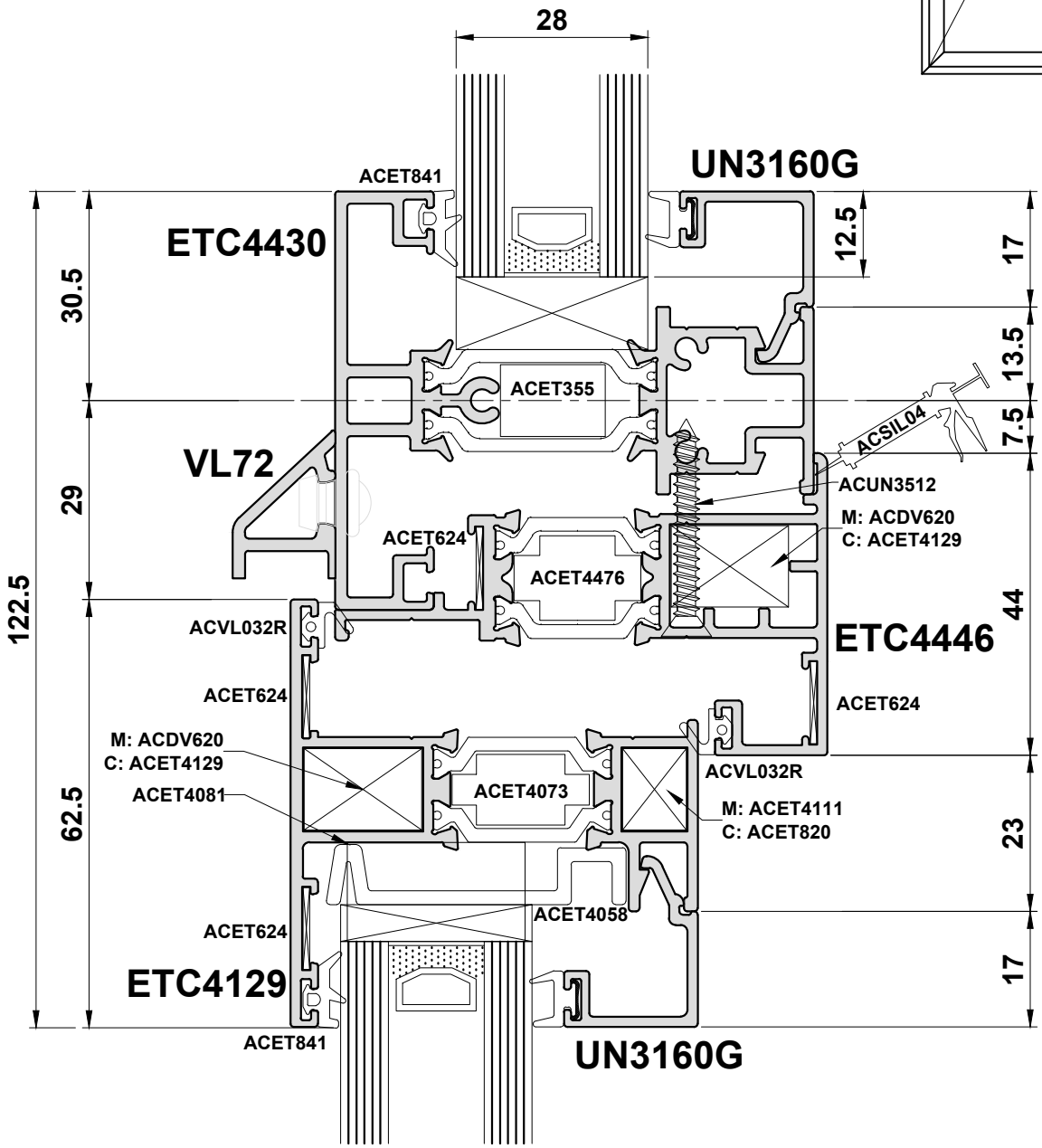

Note: Transoms will drain through the join to the outerframe.

Do Not Scale From This Drawing

Alitherm 400

Detail 13

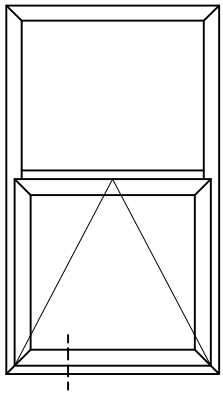

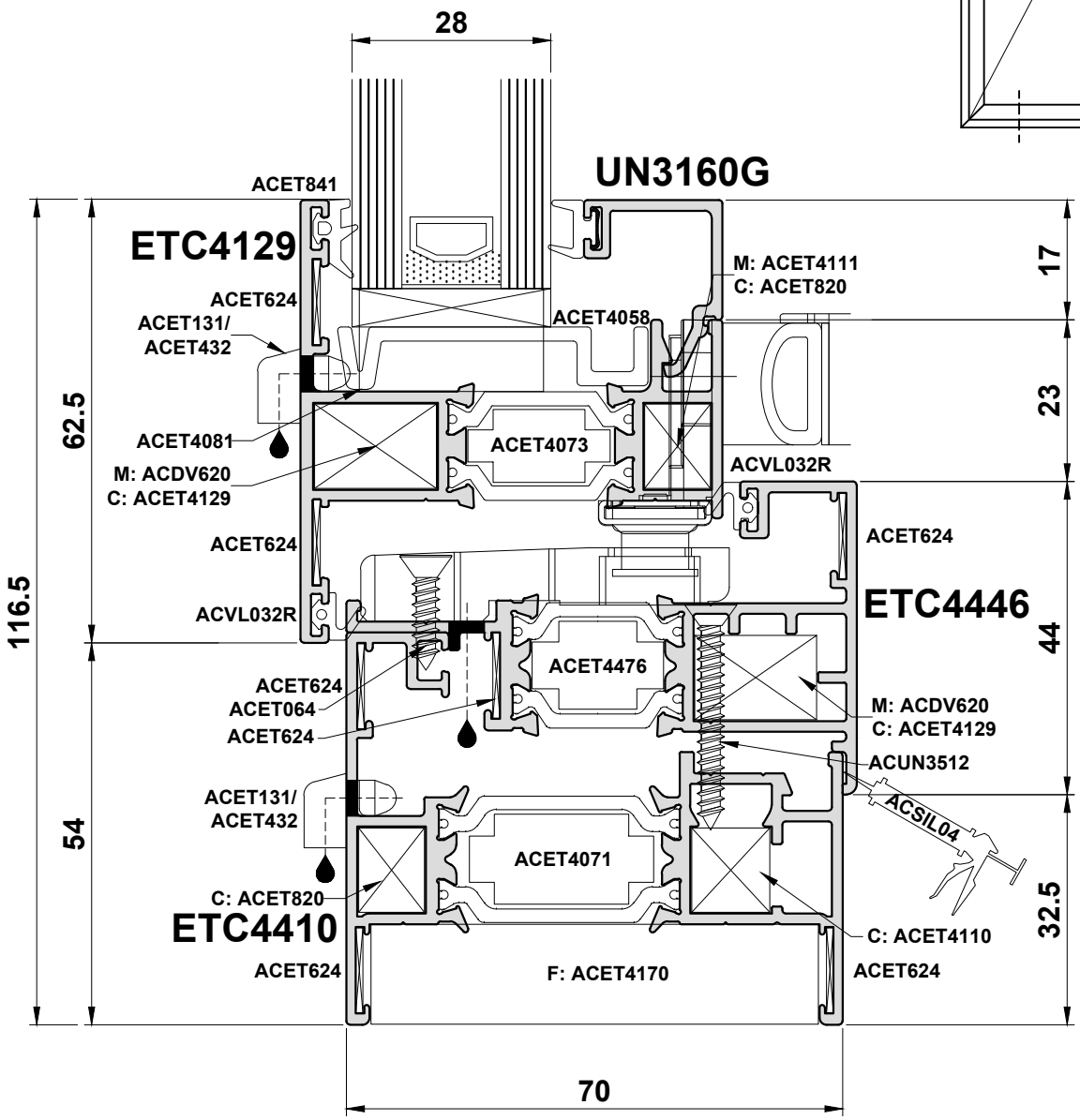

Do Not Scale From This Drawing

ISSUED: JANUARY 2026

Detail 14

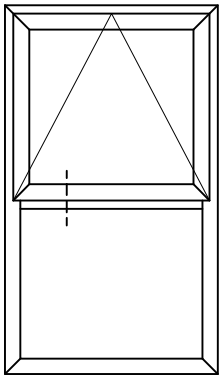

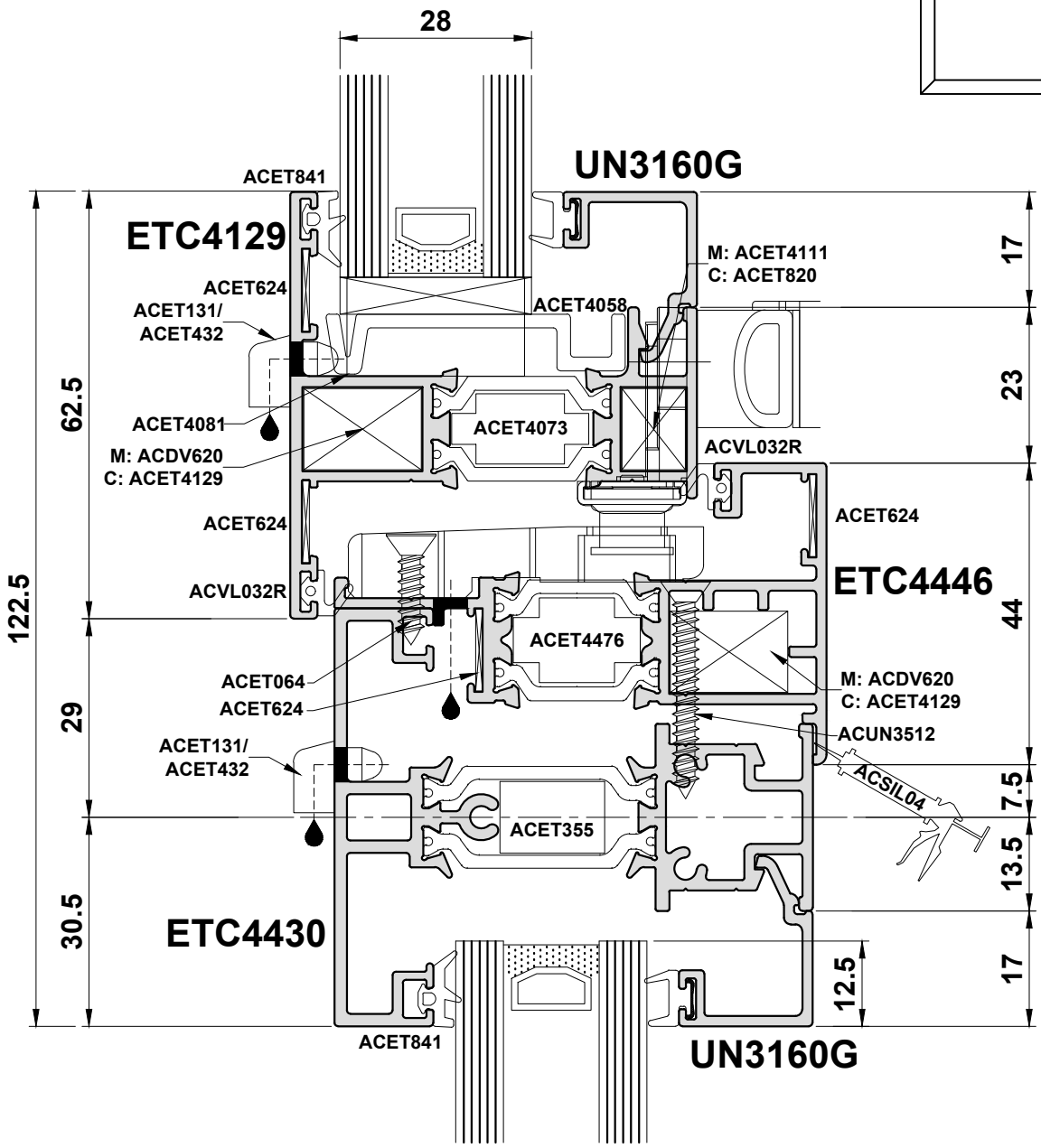

Note: Transoms will also drain through the join to the outerframe.

Do Not Scale From This Drawing

Alitherm 400

Detail 15

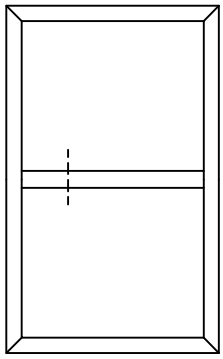

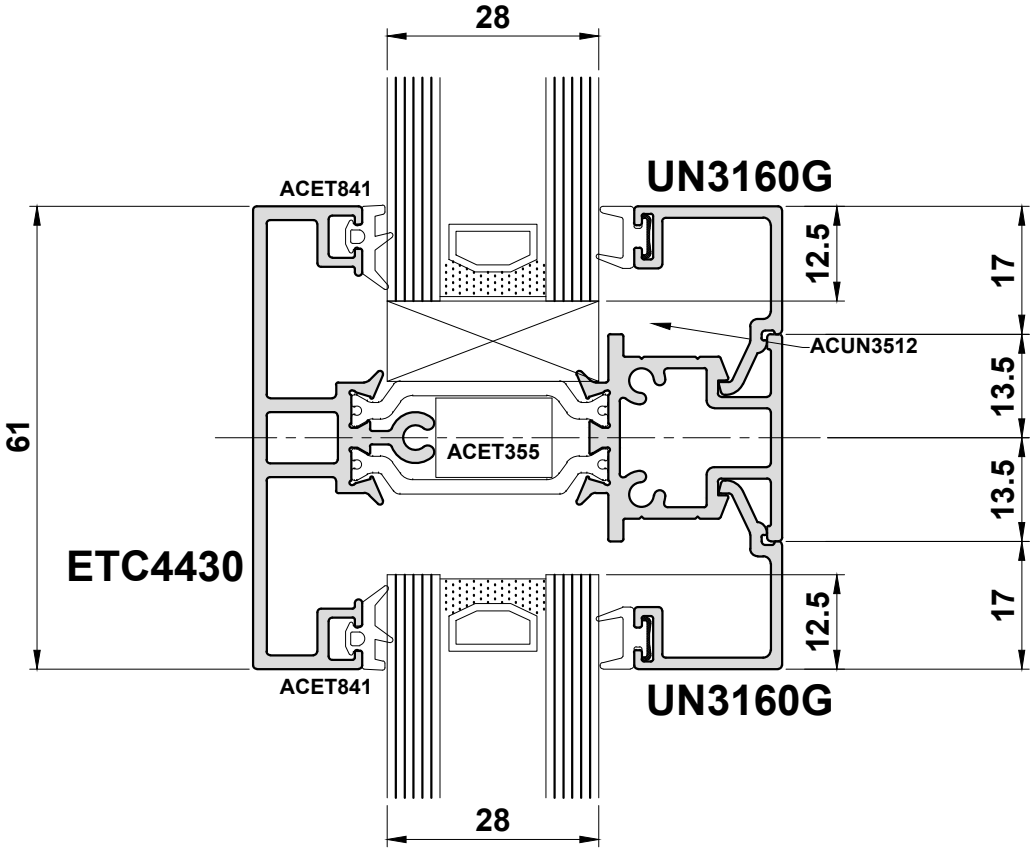

Note: Transoms will drain through the join to the outerframe.

Do Not Scale From This Drawing

ISSUED: JANUARY 2026

Section D

Statics

General Size Limitations are shown on Page A06.
Please also consider maximum limits of accessories.

For Wind Loading Limitations, Please Contact
The Technical Department - T: 01934 833100

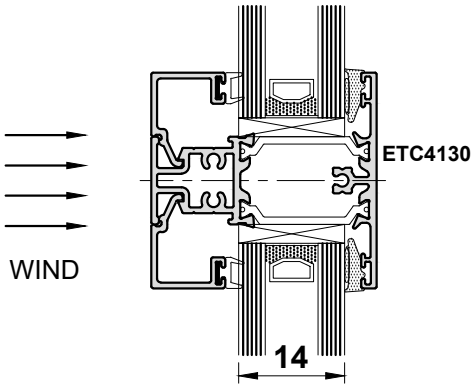

The position of the axes is an indication for the use and application of the moments of inertia (Ix and Iy) and the section modulus (Wx and Wy). We always choose the values of the axis perpendicular to the load to resist it.

- **To resist the wind loads we use the values Ix and Wx.**

EXAMPLE

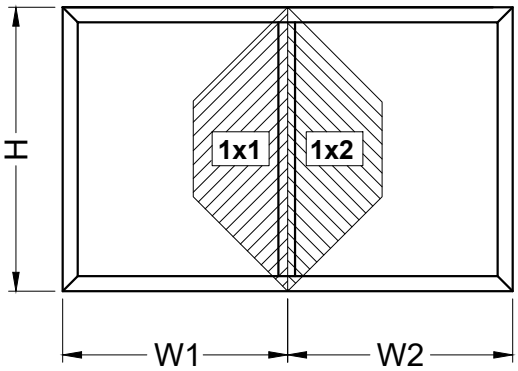

H = 175cm

W1 = 120cm

W2 = 100cm

P = 1250 Pa (wind pressure)

1) Determine Ixx value for the stiles (if required) using the Specification Wizard

Ixx = 21.0 cm4

2) Determine suitability

OK

Number	Picture	Ix(cm4) wx(cm3)	Iy(cm4) wy(cm3)
ETC4130	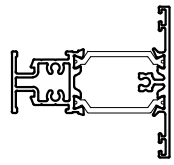	**19.39** **---** **5.84**	**4.66** **---** **1.63**
ETC4135	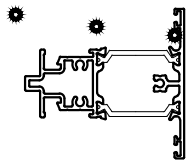	**23.74** **---** **6.30**	**6.51** **---** **2.11**
ETC4136	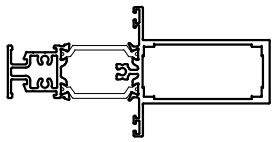	**95.03** **---** **15.97**	**9.13** **---** **3.21**

Section E

E ETC

Construction Drawings

Corner Joint Details

To ensure accurate corners, we recommend the use of support blocks (by others) whilst cutting. Do NOT clamp directly onto the polyamide.

Notes

1. Degrease mitre sections
2. Cover mitred faces with ACSIL04
3. Apply ACSIL013 to cleat chambers
4. Apply ACSIL04 to any fractures formed by crimping to and to mechanical blocks to make watertight

Table 1

KL Colour	Sealant Part Number
Black	ACSIL04BL
White	ACSIL04WP
Clear	ACSIL04CL
KL001	ACSIL04KL001
KL002	ACSIL04KL002
KL003	ACSIL04KL003
KL004	ACSIL04KL004
KL005	ACSIL04KL005
KL006	ACSIL04KL006
KL007	ACSIL04KL007
KL010	ACSIL04KL010
KL011	ACSIL04KL011
KL012	ACSIL04KL012
KL013	ACSIL04KL013

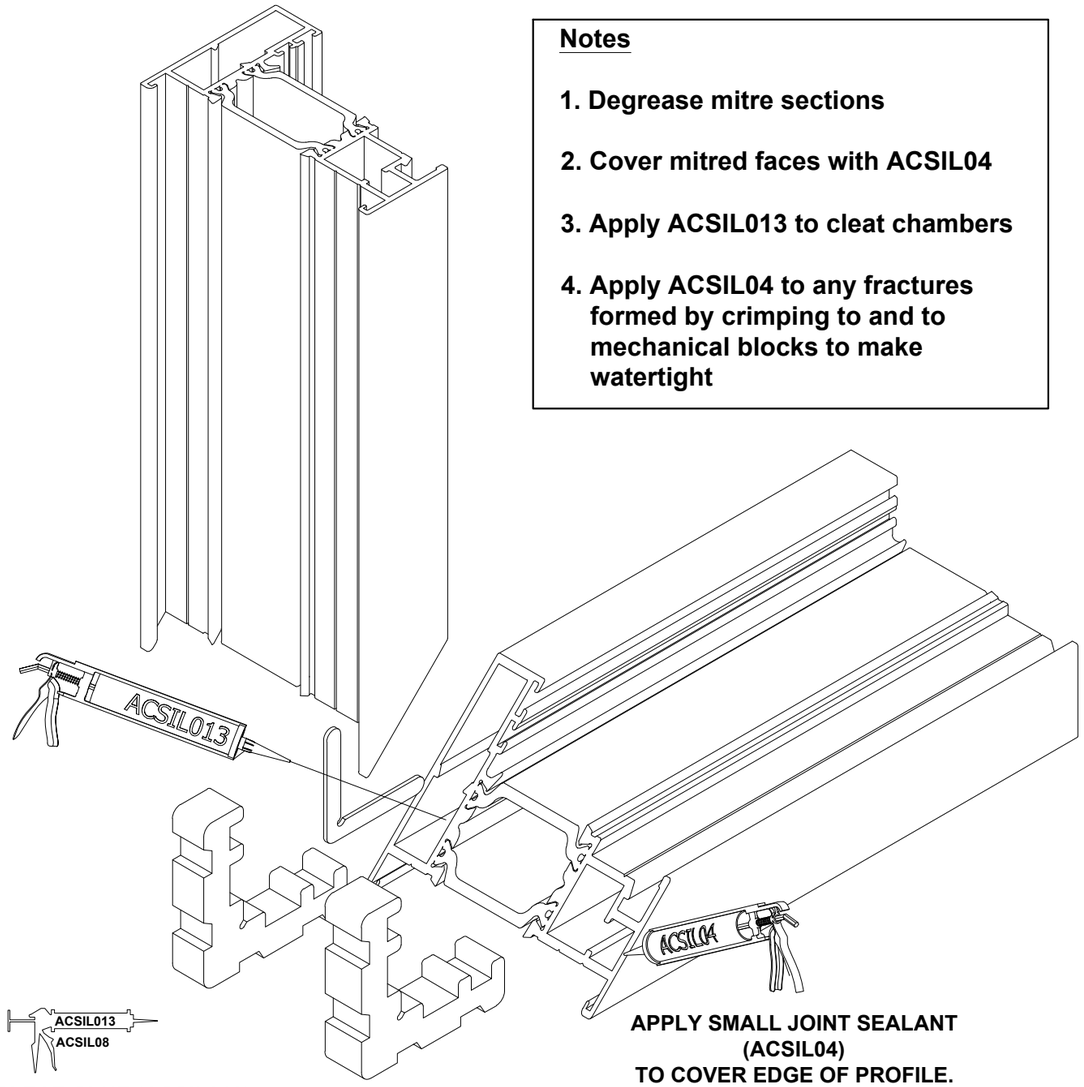

APPLY CLEAT GLUE (ACSIL013) TO ALL CLEAT CHAMBERS

APPLY SMALL JOINT SEALANT (ACSIL04) TO COVER EDGE OF PROFILE.

Do Not Scale From This Drawing

Corner Crimping

Manual Crimper = WUT024HSZA

Power Crimper = ACCR100

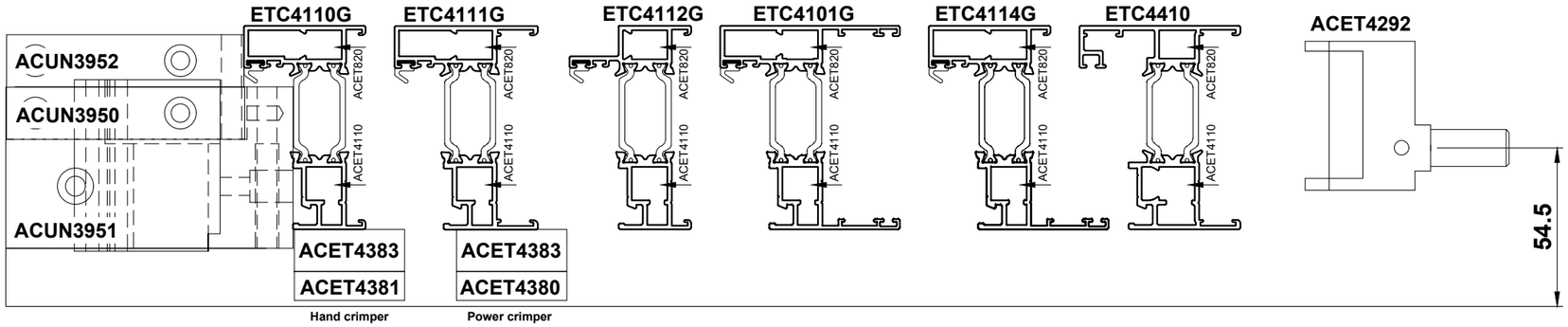

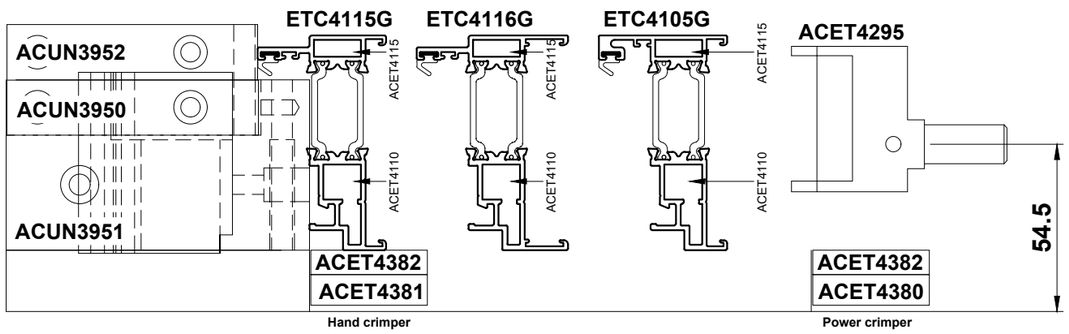

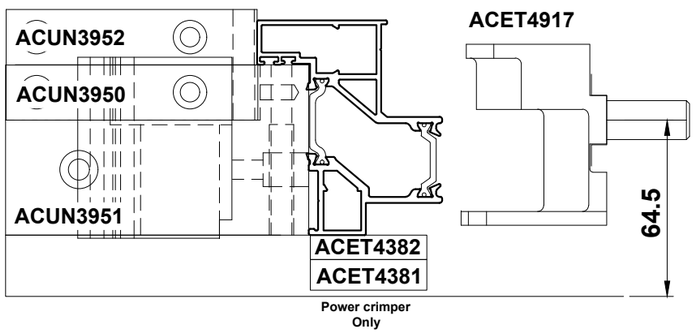

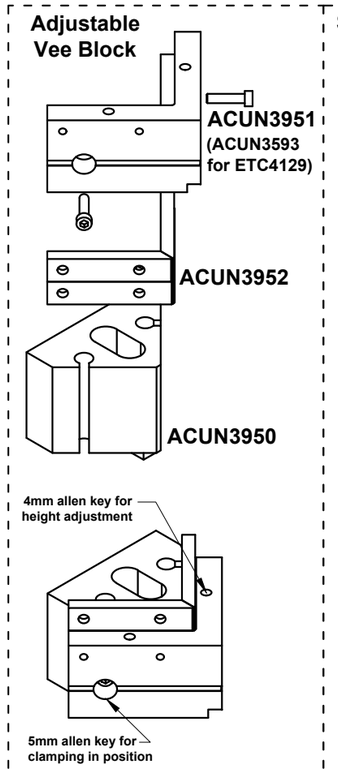

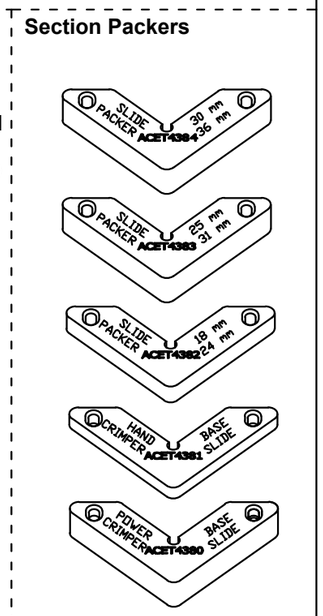

Do Not Scale From This Drawing

Corner Crimping

Manual Crimper = WUT024HSZA
Power Crimper = ACCR100

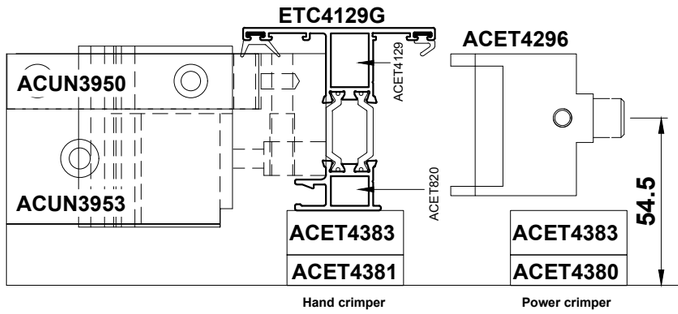

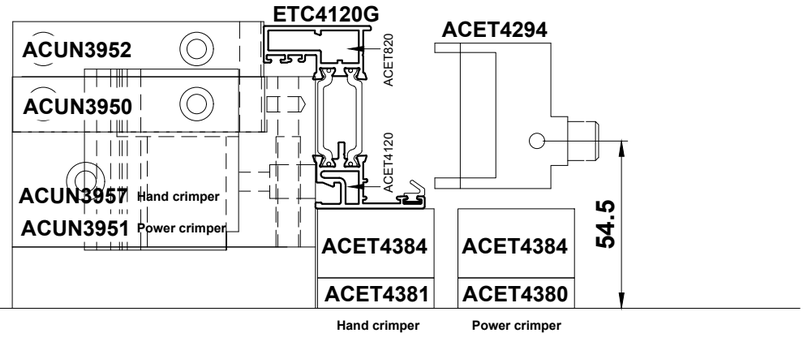

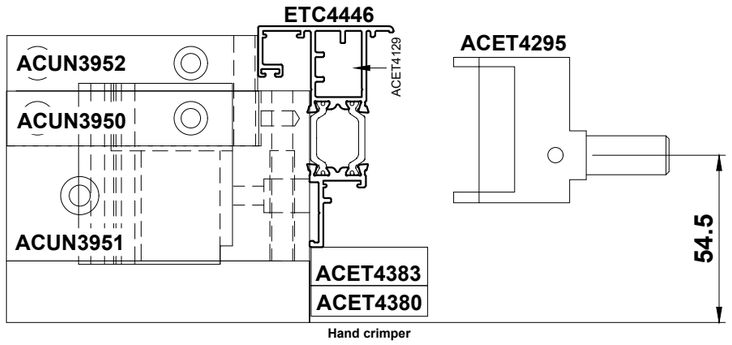

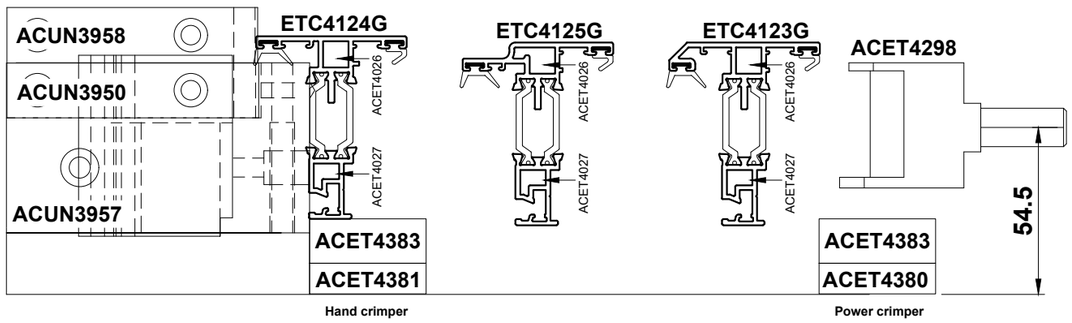

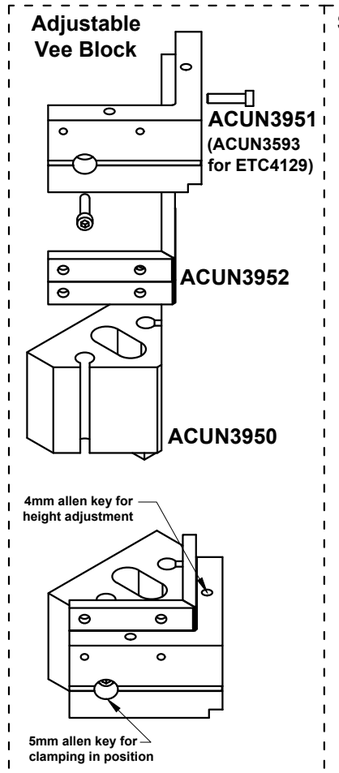

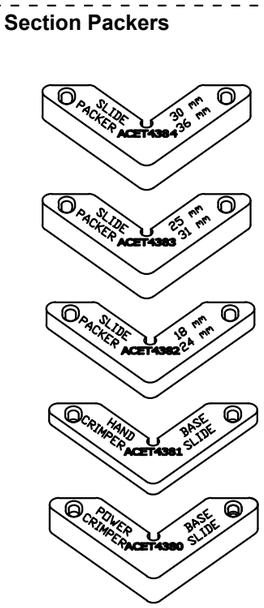

Do Not Scale From This Drawing

ACET963 & ACET4950 Punch Tool

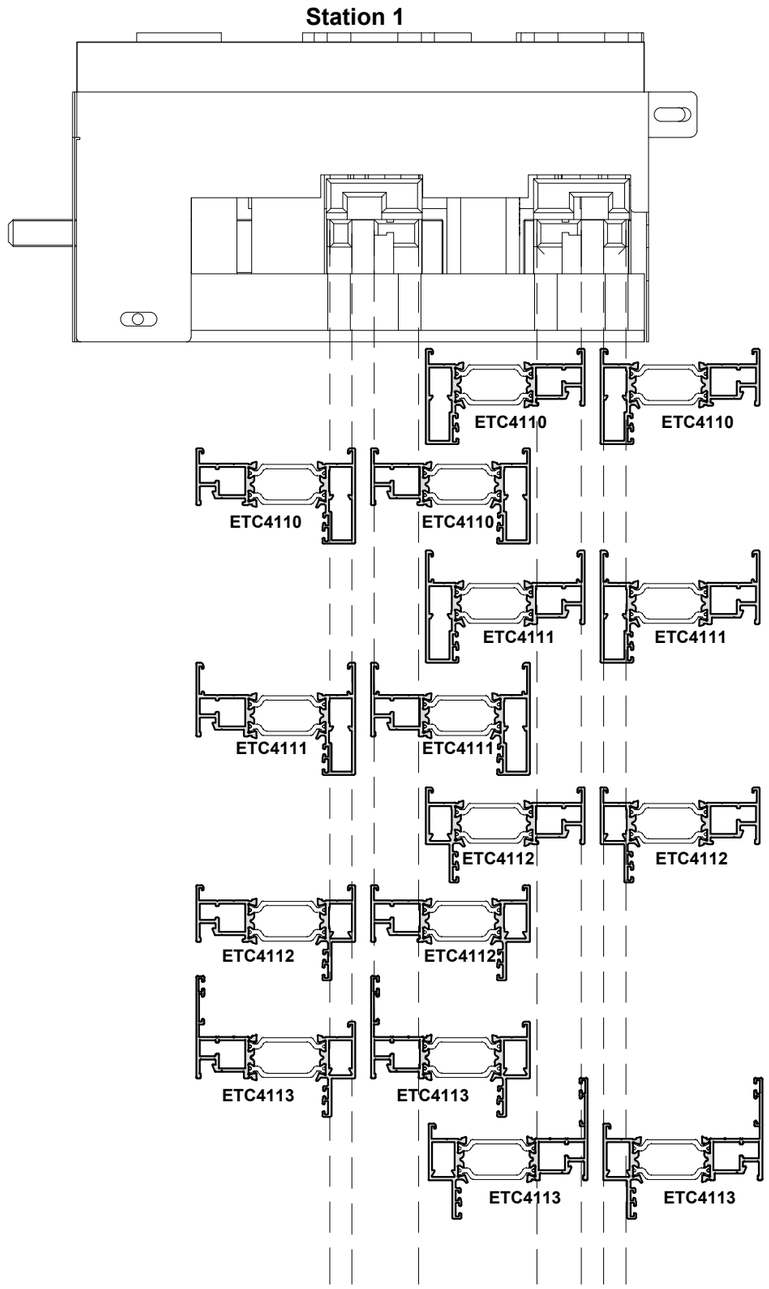

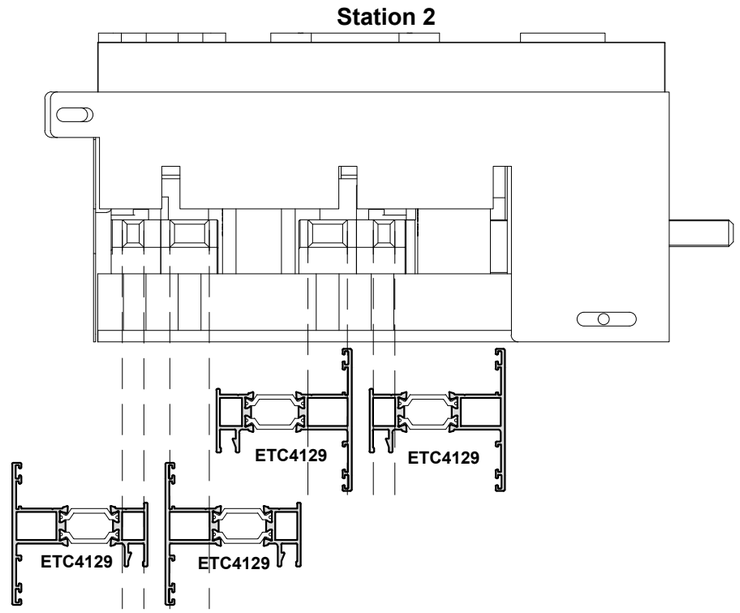

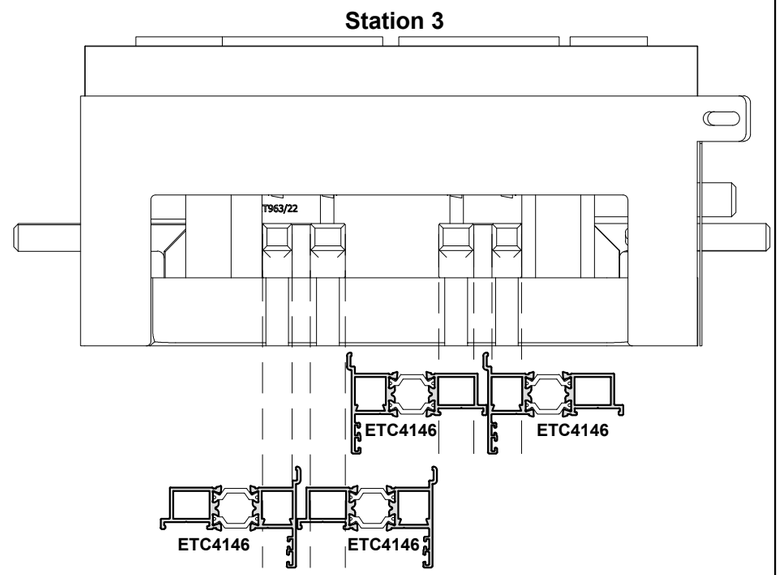

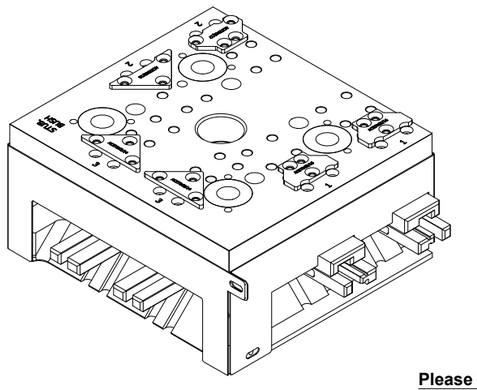

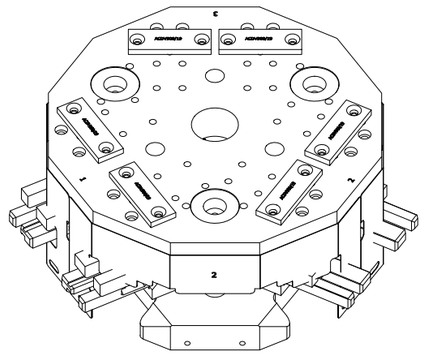

Please Note
The following profiles as not compatible with ACET963R or ACET4950:
ETC4101, ETC4105, ETC4114, ETC4115, ETC4116, ETC4117, ETC4120, ETC4123, ETC4124, ETC4125, ETC4147

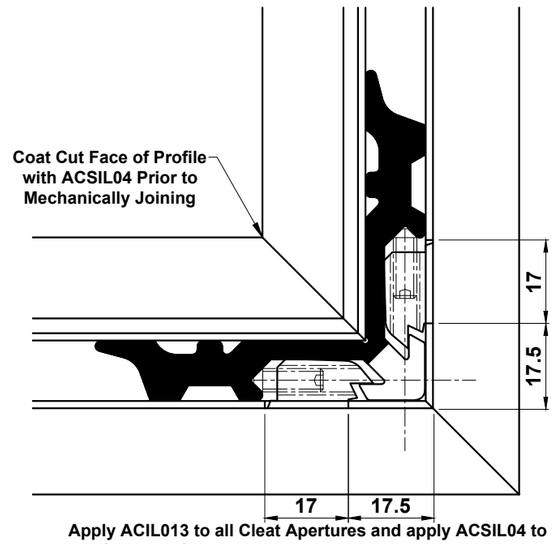

Apply ACIL013 to all Cleat Apertures and apply ACSIL04 to any fractures formed by crimping to make watertight

Do Not Scale From This Drawing

Variable Angle Cleats

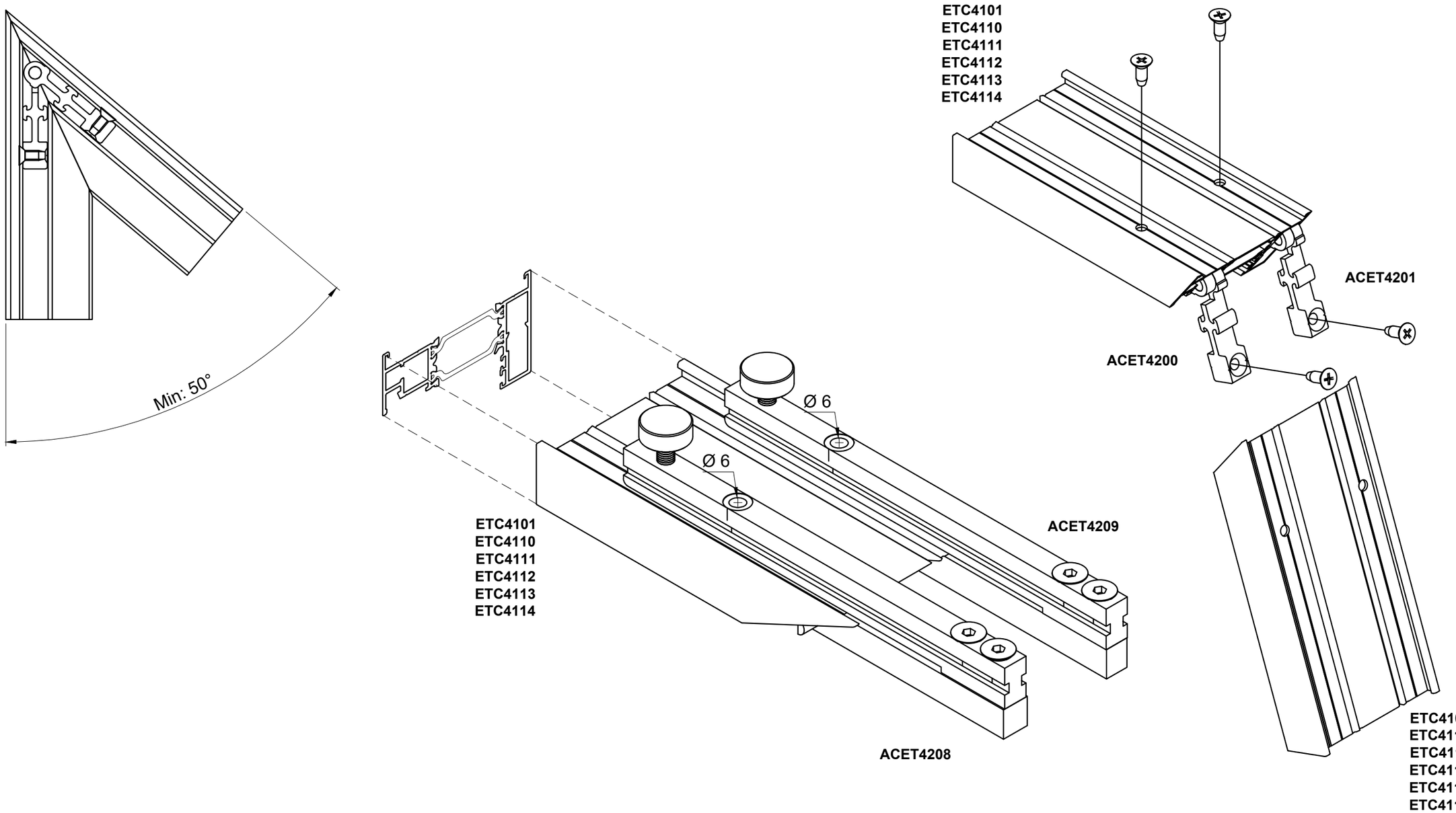

Do Not Scale From This Drawing

Bead Notching ACDV916

LOCK SELECTION NOTES:

PLEASE FOLLOW TABLE ON PAGE E06 FOR LOCK SELECTION OPTIONS.

ALL SASH / LOCK COMBINATIONS REQUIRE BEAD NOTCHING.

ALL OTHER INTERMEDIATE SHOOTBOLT COMBINATIONS REQUIRE BEAD NOTCHING.

ALL LOCKS & SASHES HAVE BEEN TESTED TO PAS24:2016. PLEASE FOLLOW PAS24:2016 FABRICATION INSTRUCTIONS AND LIMITATIONS.

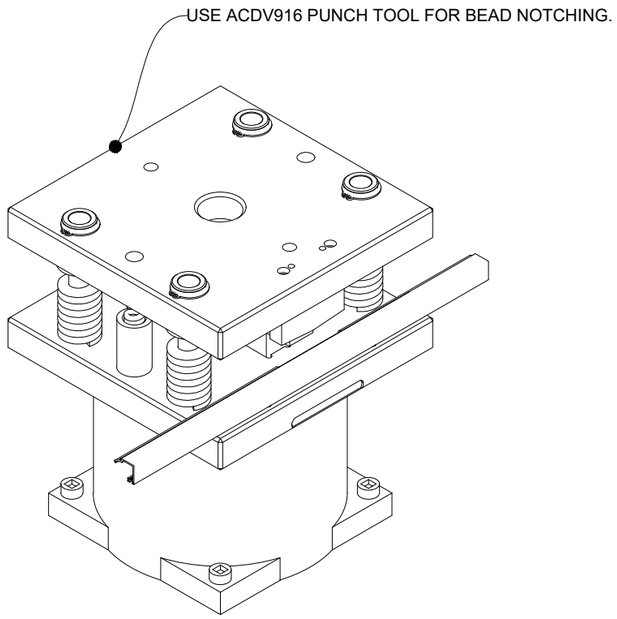

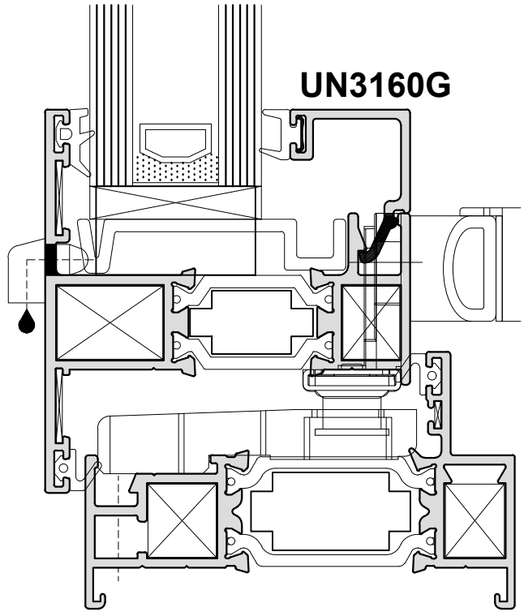

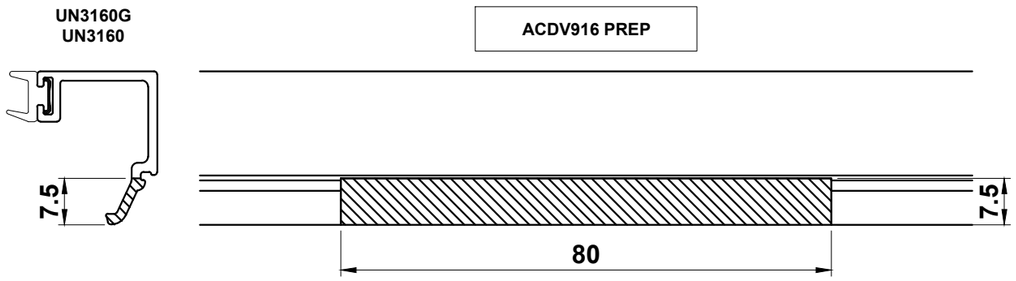

Do Not Scale From This Drawing

Drainage

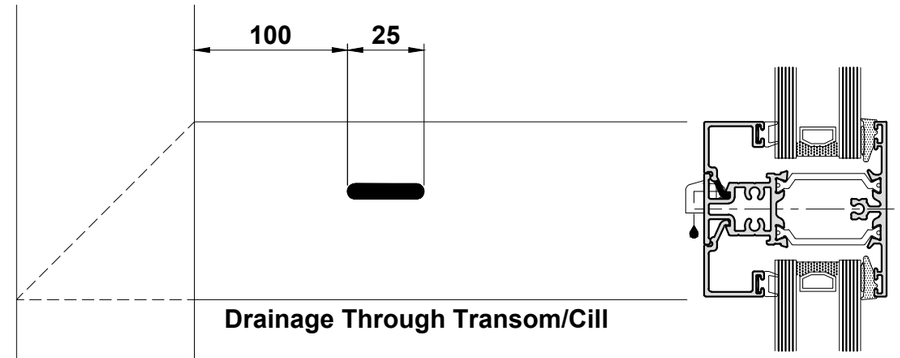

Drainage Through Transom/Cill

Transom Fixed Light *

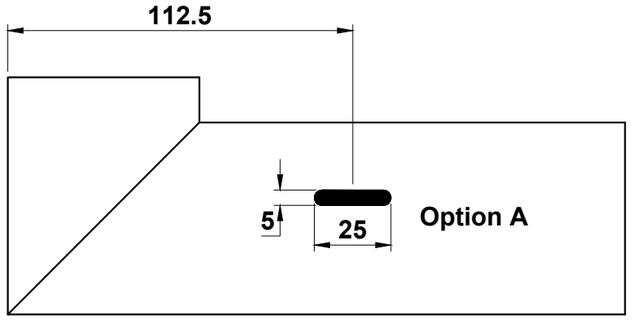

Drainage Through Vent

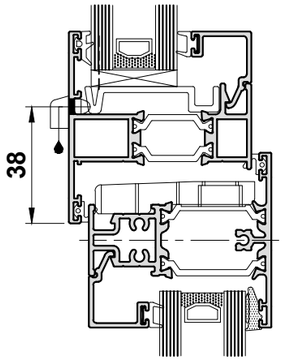

* **Note:** Transoms will drain through the join to the outerframe.

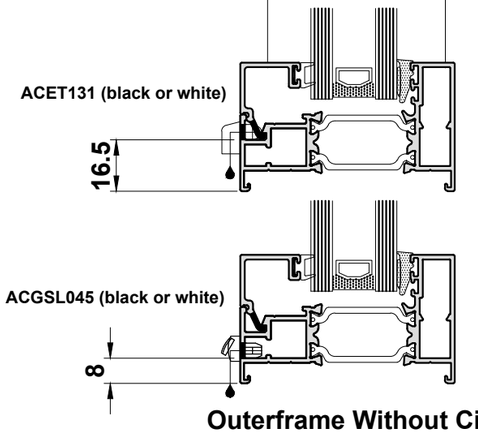

Outerframe Without Cill with opener

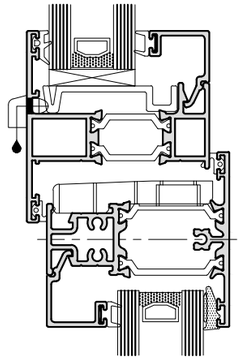

Transom With Vent *

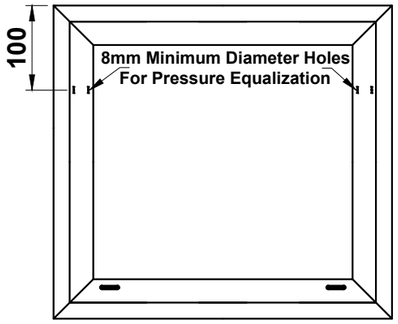

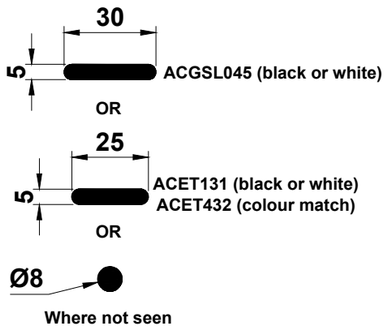

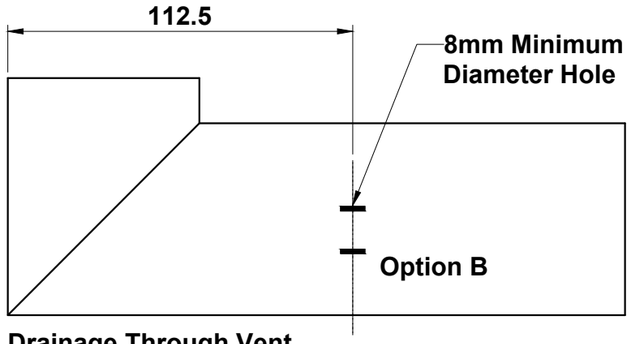

Drainage Through Vent

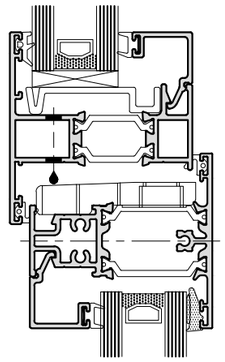

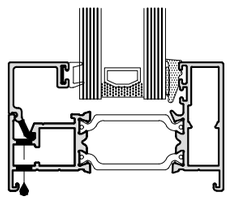

Outerframe With Cill

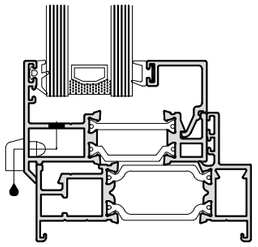

Outerframe with Reverse Adaptor without cill

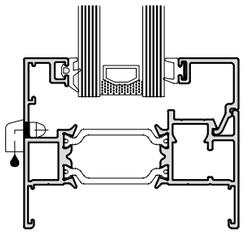

Internally Glazed Outerframe without cill

Important Note: All exposed aluminium should be coated using ACSIL014 or painted to match the frame.

Flush Casement Drainage

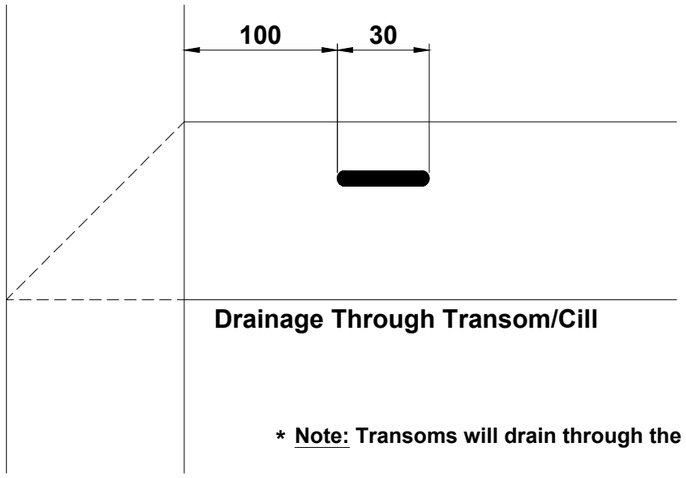

Drainage Through Transom/Cill

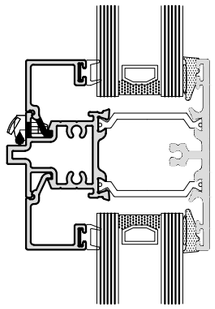

Transom Fixed Light *

* Note: Transoms will drain through the join to the outerframe.

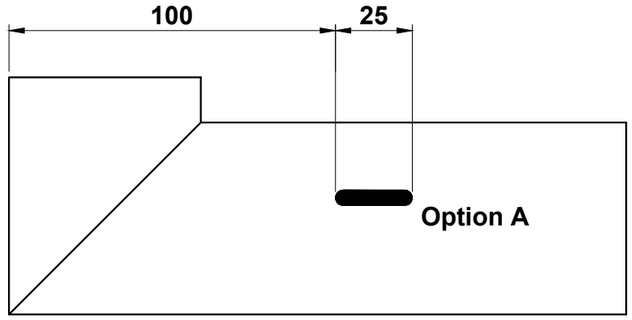

Drainage Through Vent

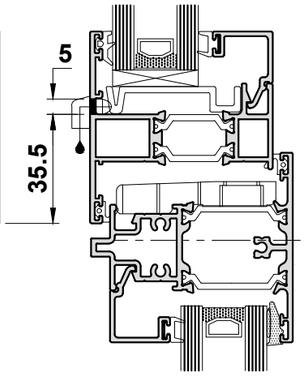

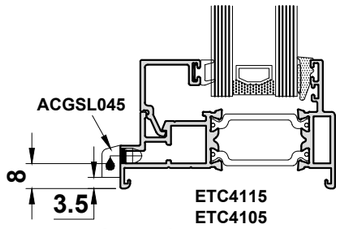

Outerframe Without Cill

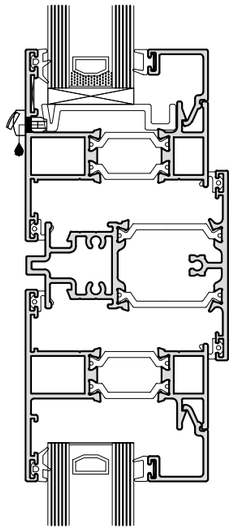

Transom With Vent *

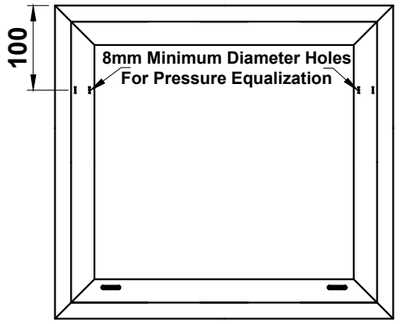

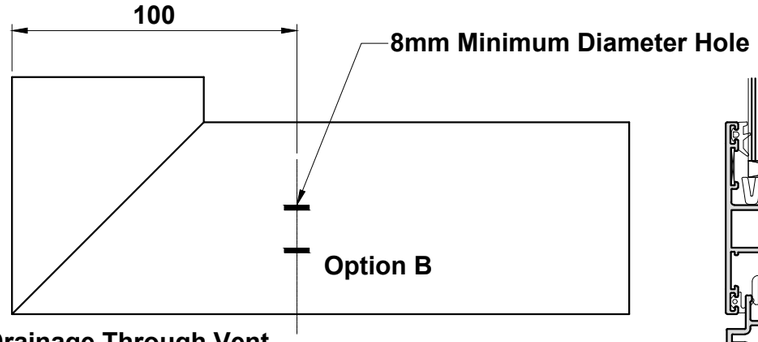

Drainage Through Vent

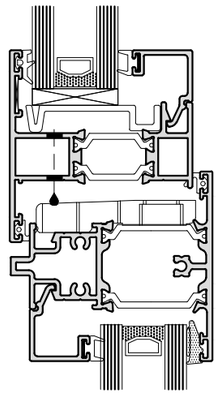

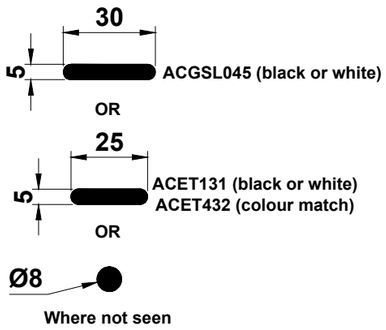

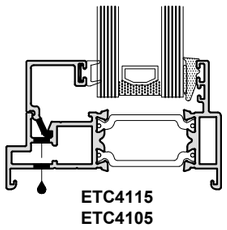

Outerframe With Cill

Important Note: All exposed aluminium should be coated using ACSIL014 or painted to match the frame.

Do Not Scale From This Drawing

Sub Cill Drainage

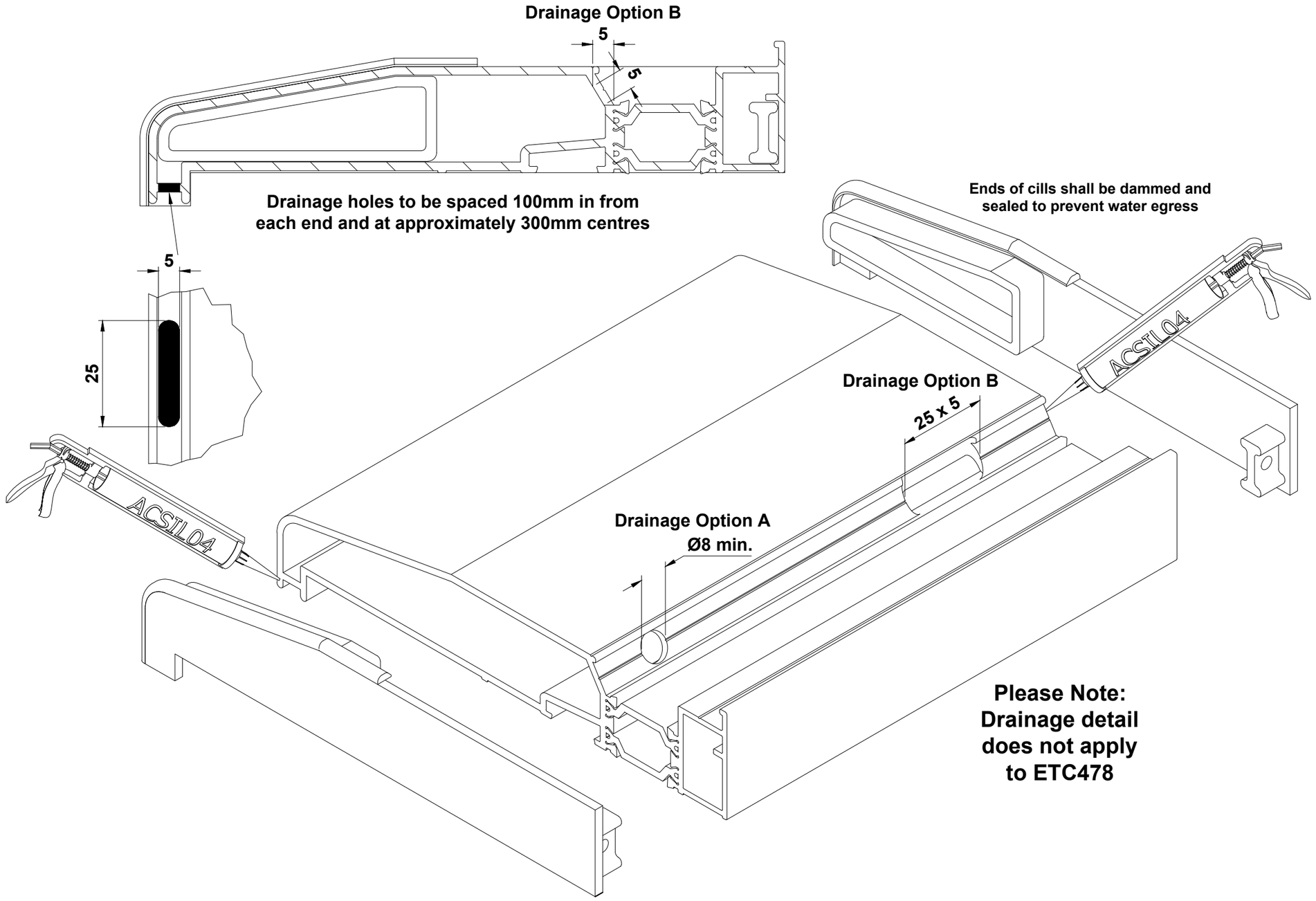

Do Not Scale From This Drawing

Angled Sub Cill

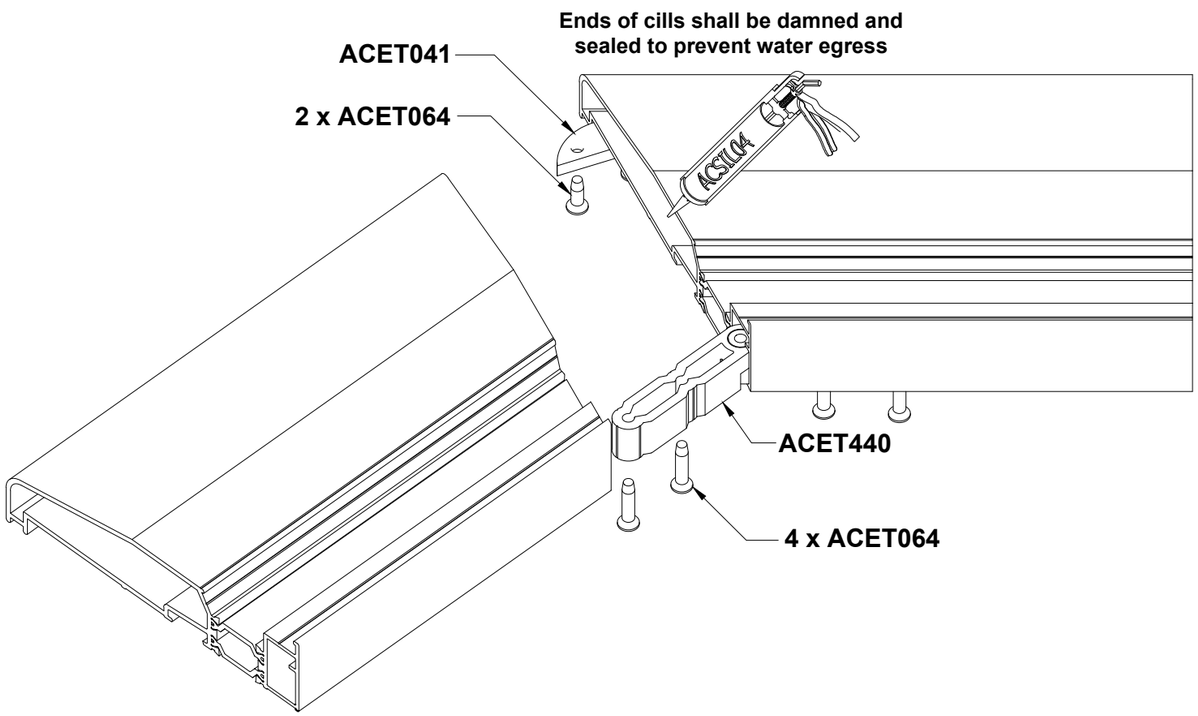

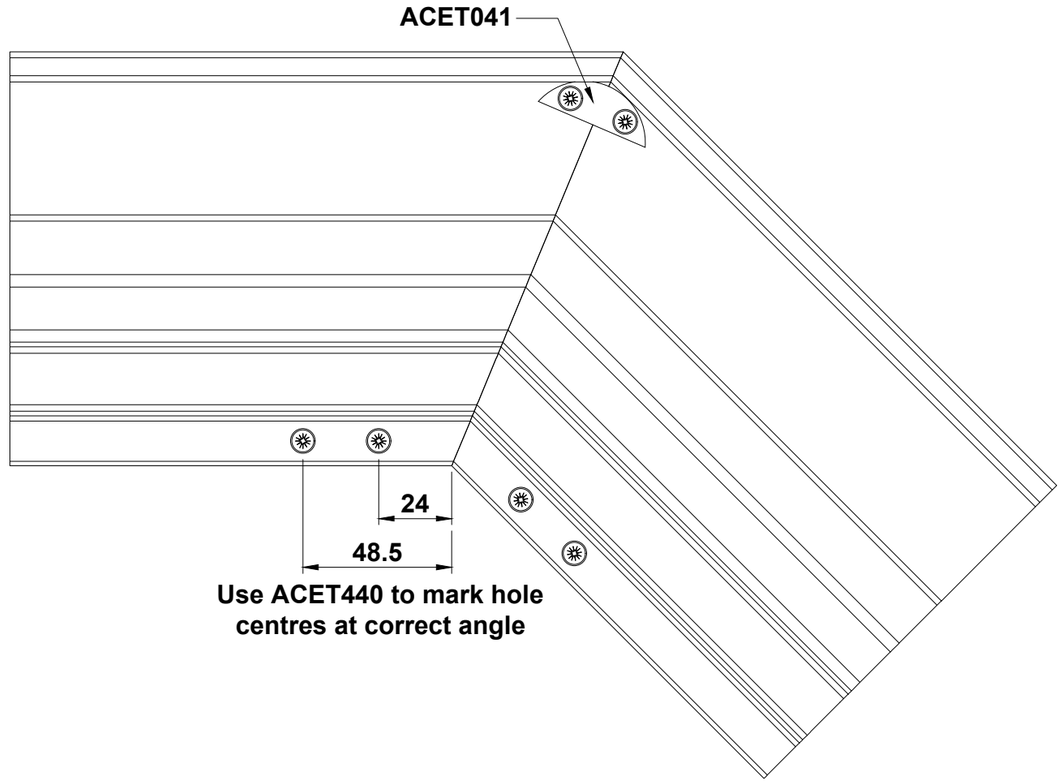

Do Not Scale From This Drawing

ETC4130 Mullion/Transom Detail

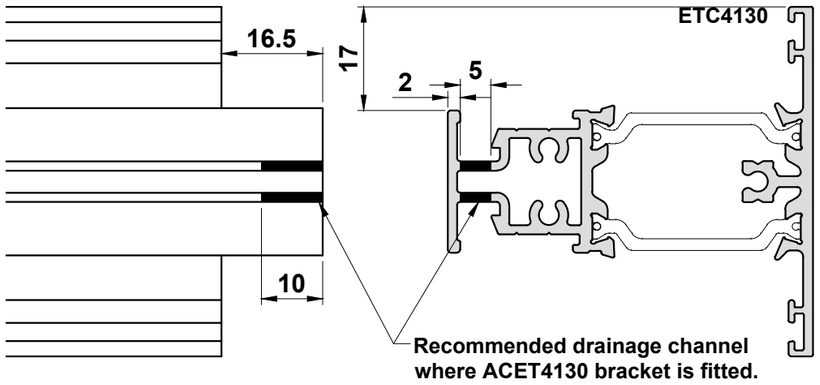

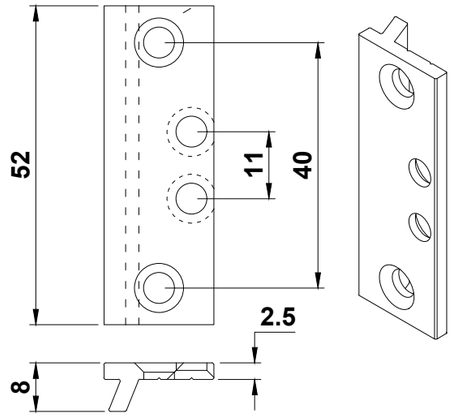

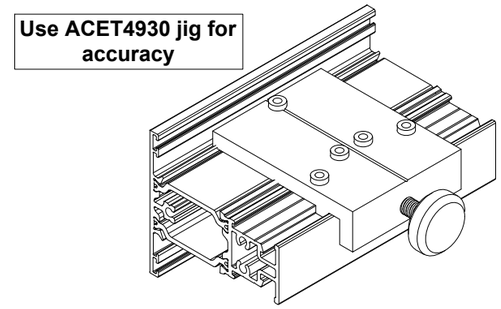

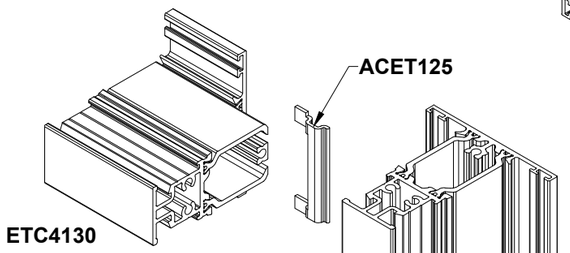

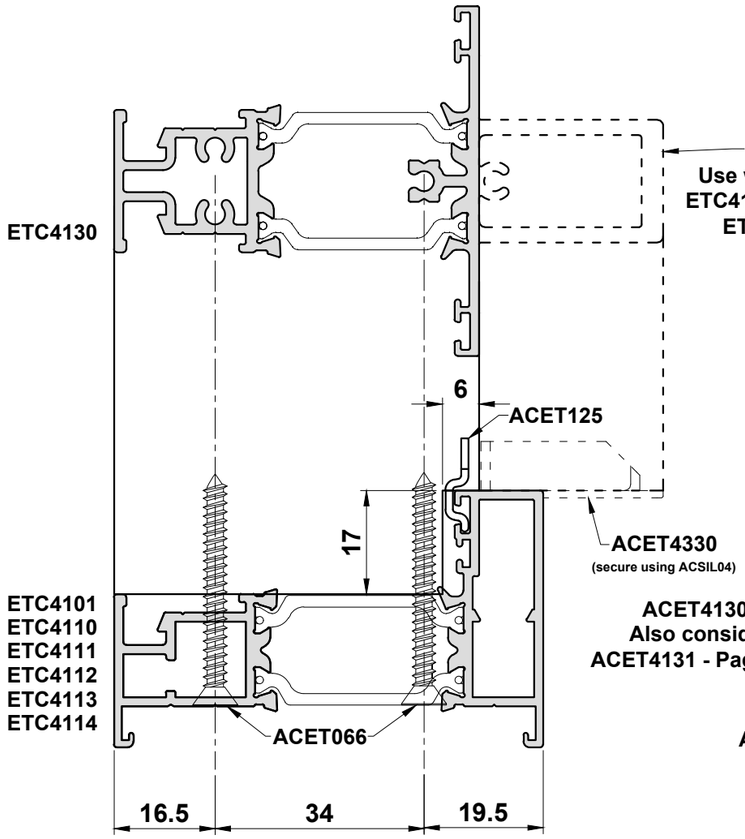

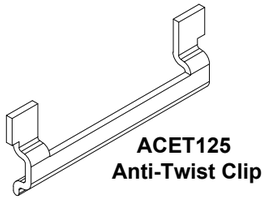

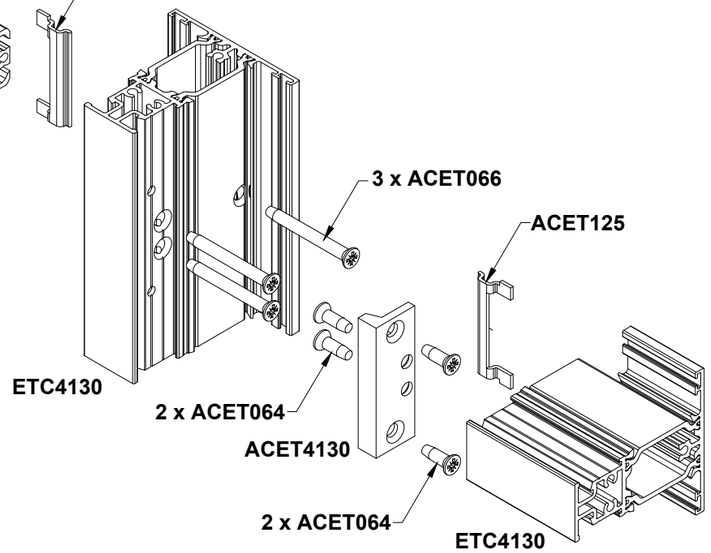

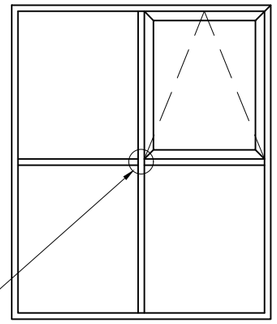

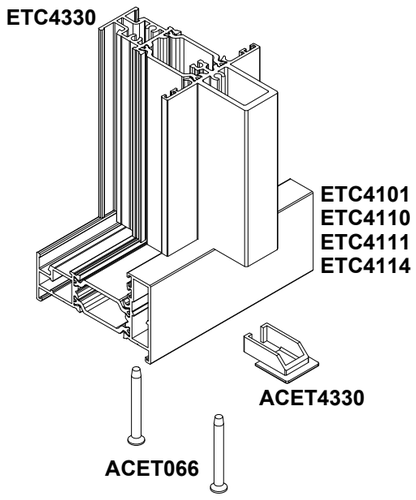

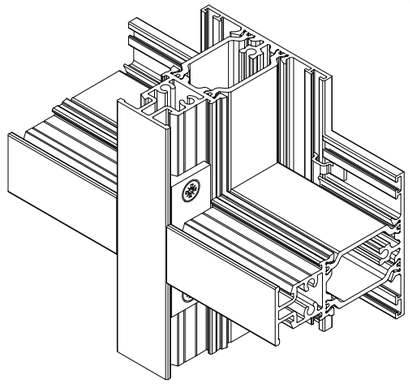

Important Fabrication Note:
All joints shall be sealed using ACSIL04

Do Not Scale From This Drawing

ETC4130 Mullion/Transom Detail

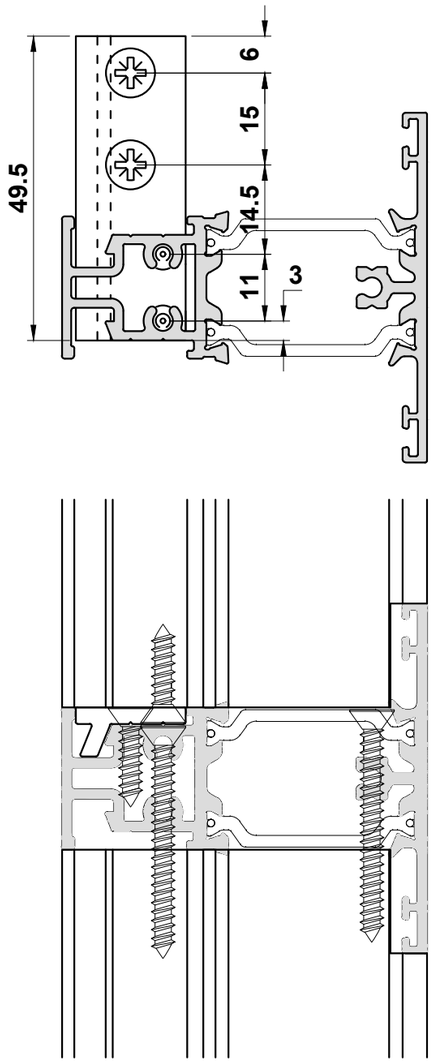

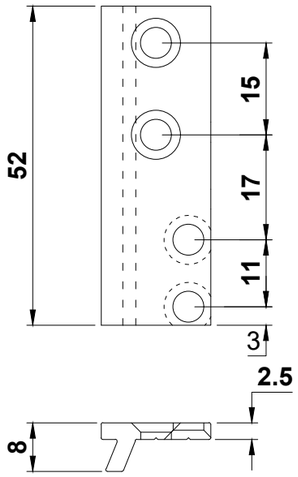

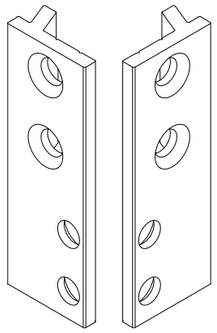

ACET4131
Cruciform Bracket (Pairs)

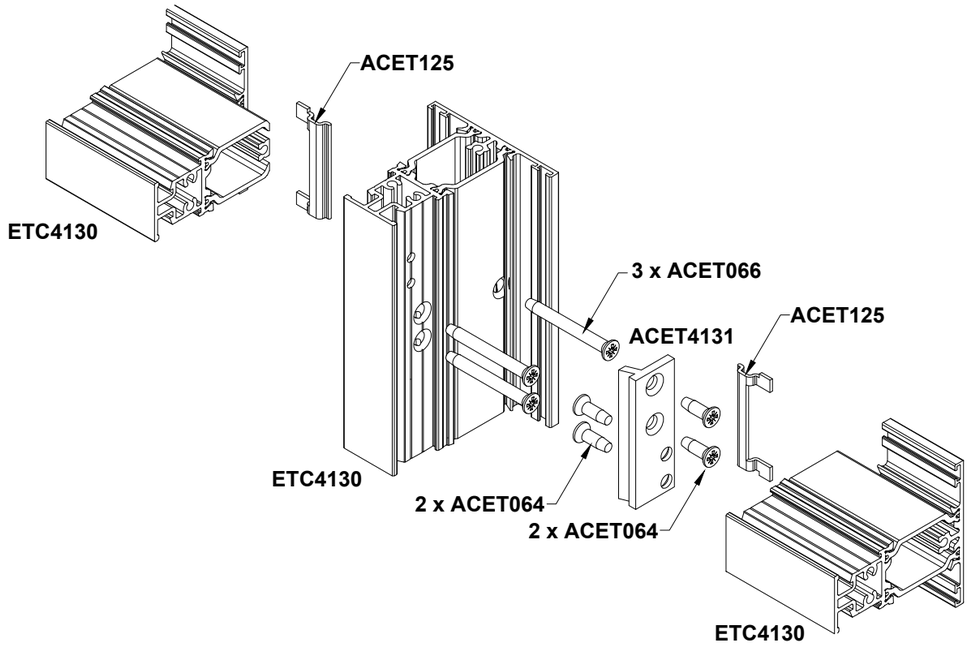

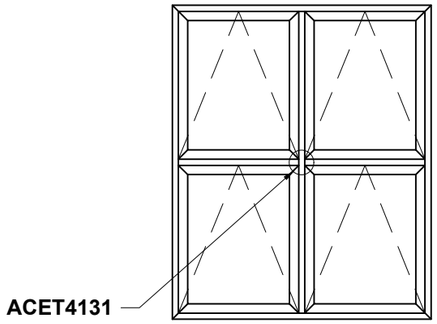

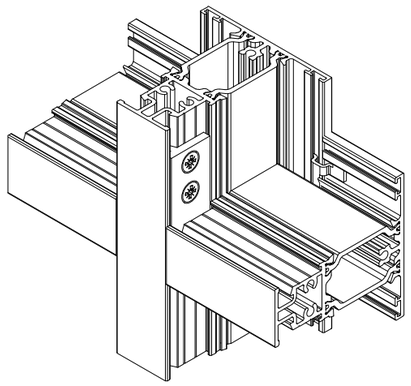

Important Fabrication Note:
All joints shall be sealed using ACSIL04

Do Not Scale From This Drawing

ETC4135 Mullion/Transom Detail

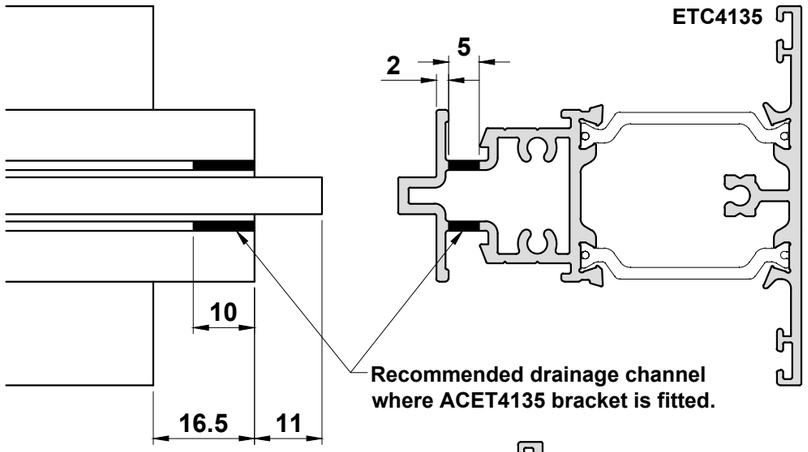

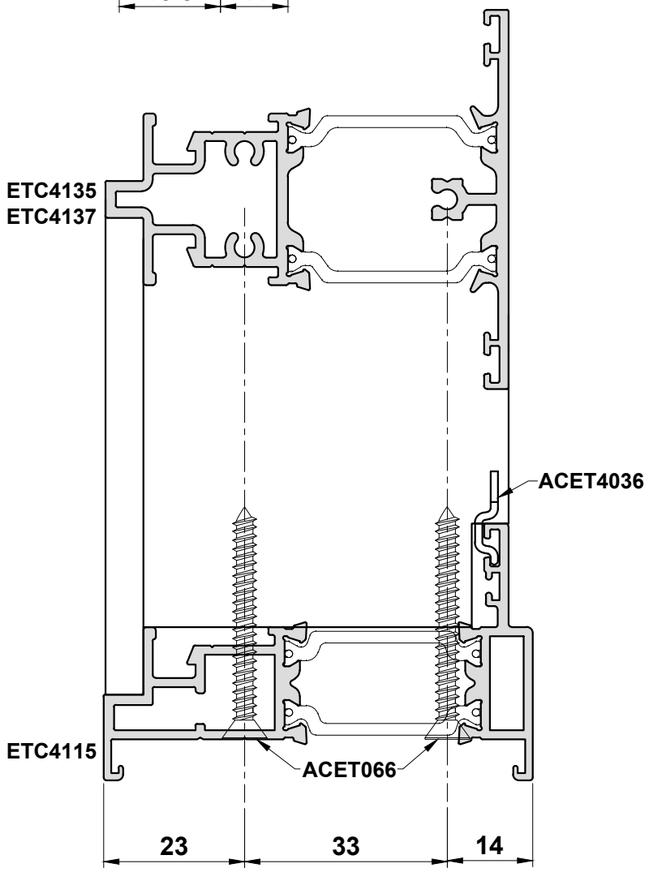

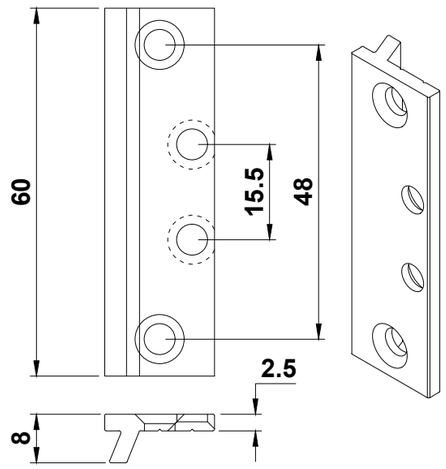

ACET4135
Cruciform Bracket

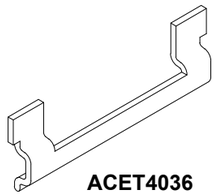

ACET4036
Anti-Twist Clip

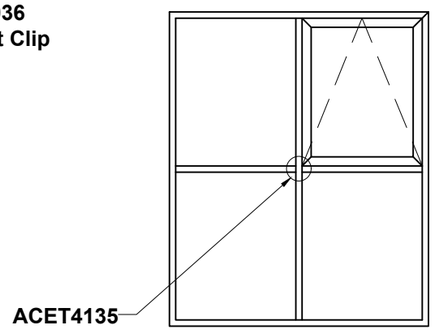

Important Fabrication Note:
All joints shall be sealed using ACSIL04

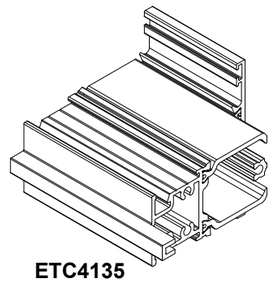

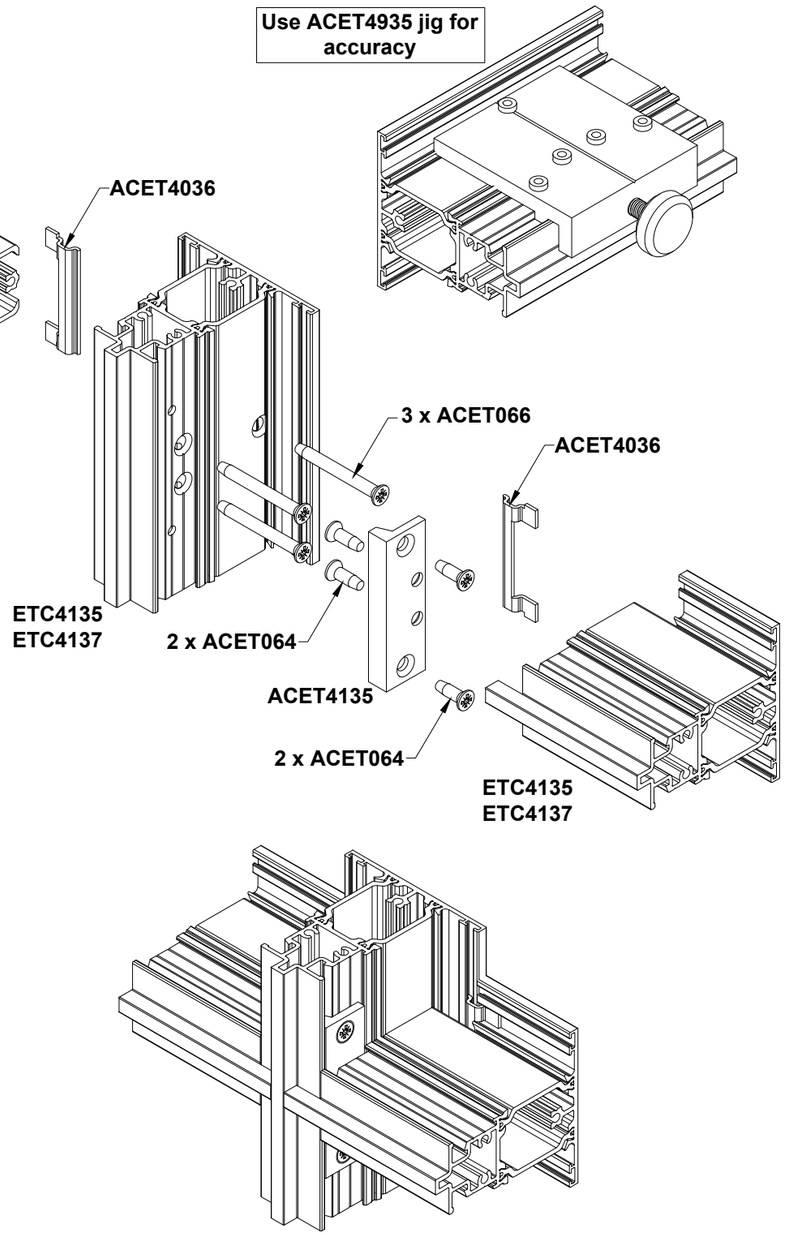

Do Not Scale From This Drawing

ETC4135 Mullion/Transom Detail

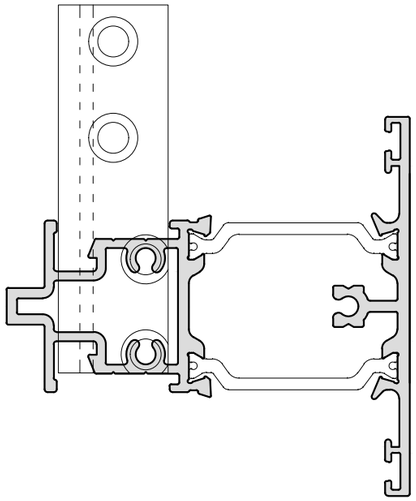

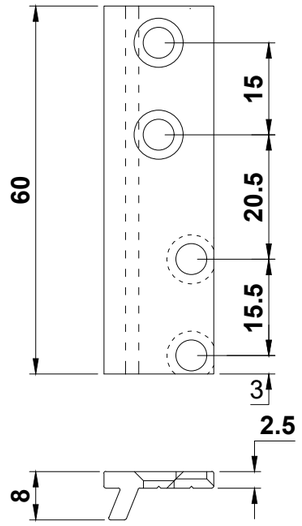

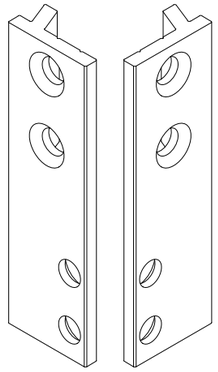

ACET4136
Cruciform Bracket (Pairs)

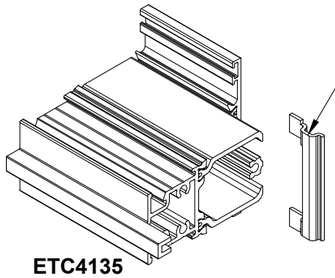

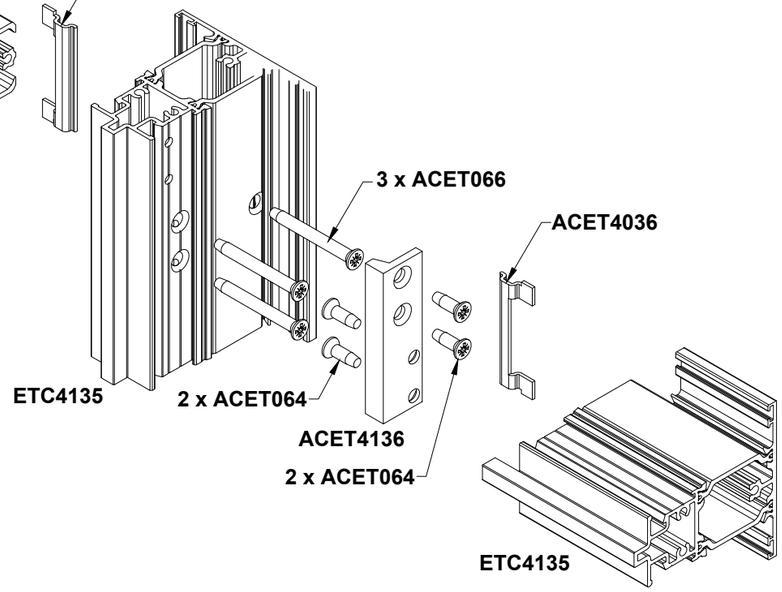

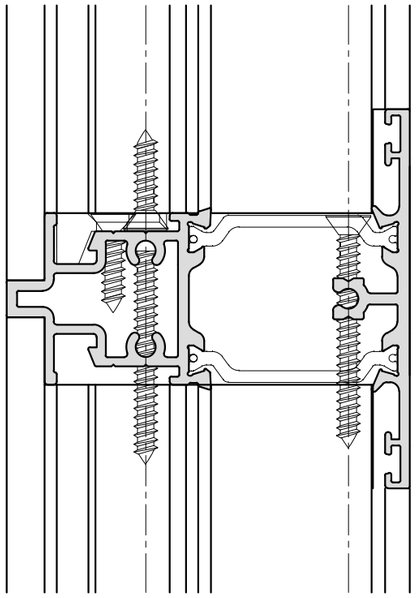

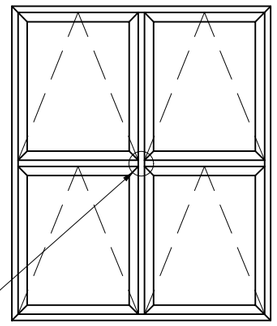

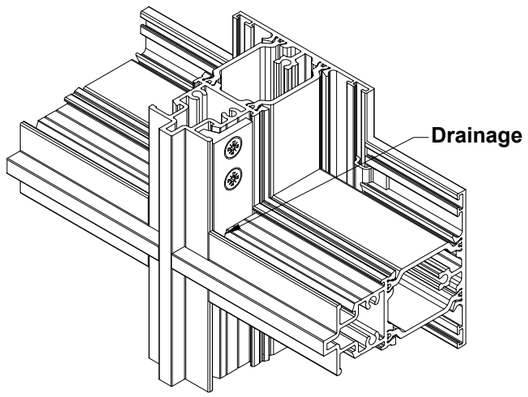

Important Fabrication Note:
All joints shall be sealed using ACSIL04

Do Not Scale From This Drawing

ETC4134 Mullion/Transom Detail

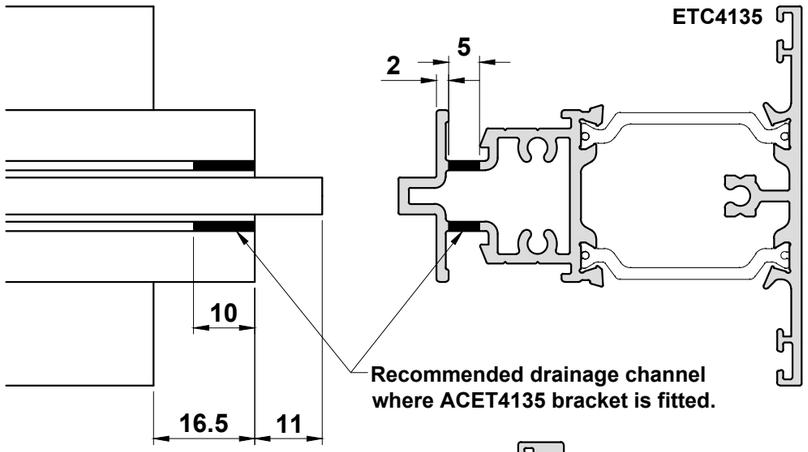

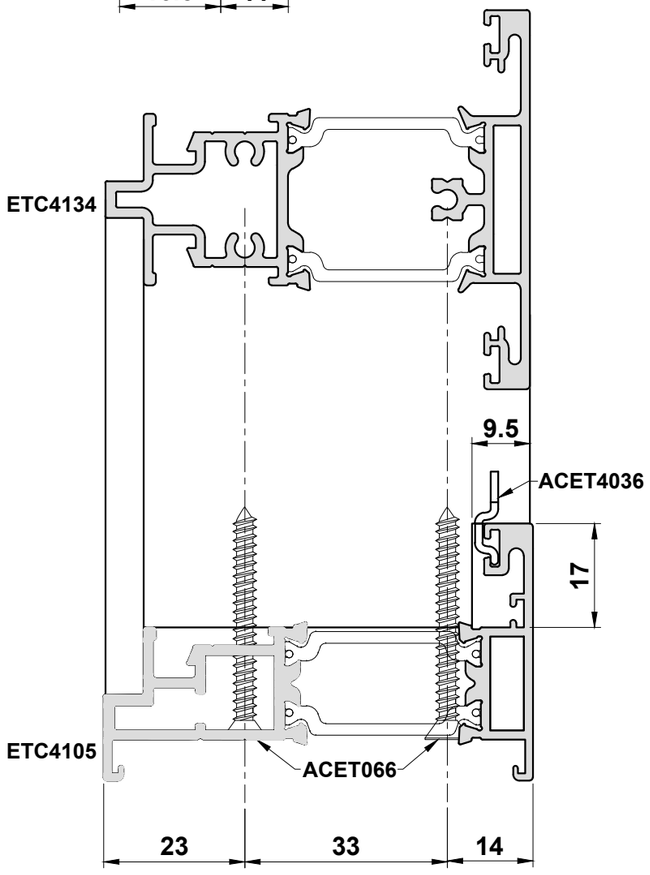

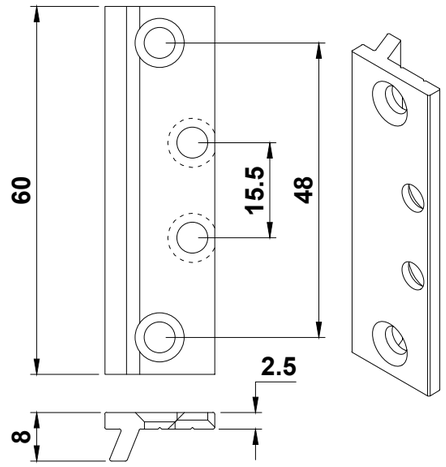

ACET4135
Cruciform Bracket

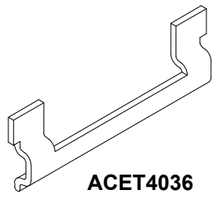

ACET4036
Anti-Twist Clip

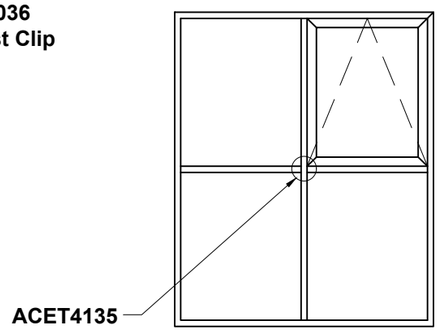

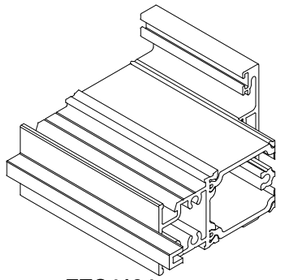

ETC4134

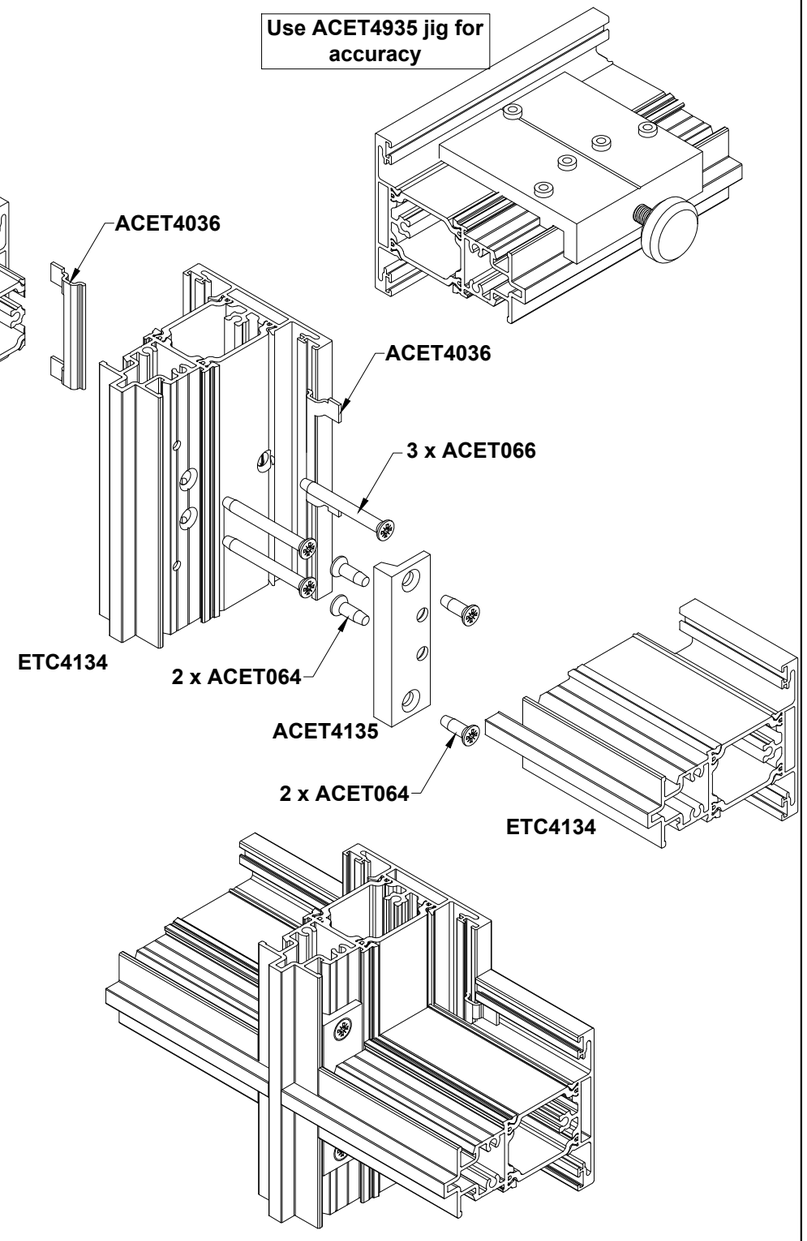

Important Fabrication Note:
All joints shall be sealed using ACSIL04

Do Not Scale From This Drawing

ETC4134 Mullion/Transom Detail

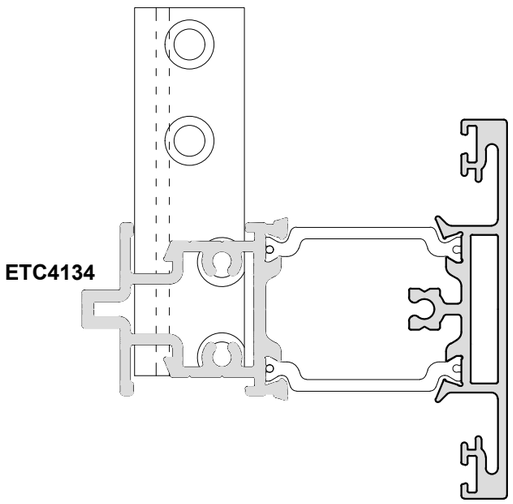

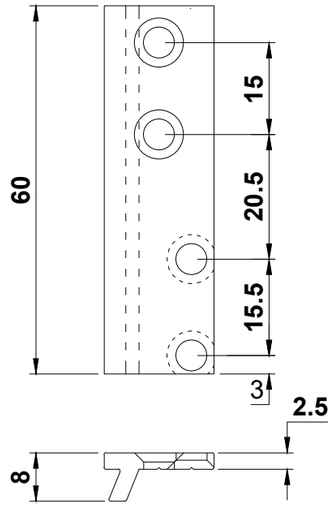

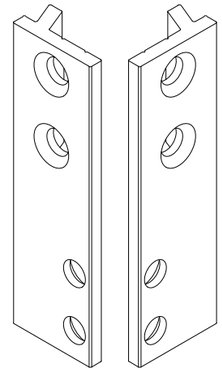

ACET4136
Cruciform Bracket (Pairs)

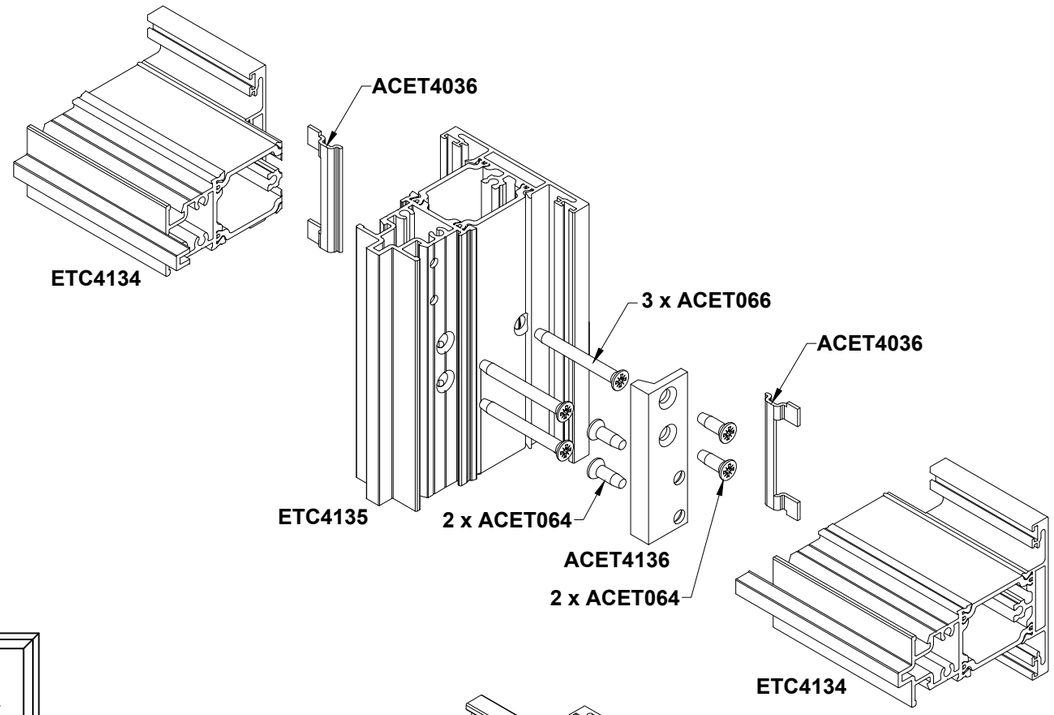

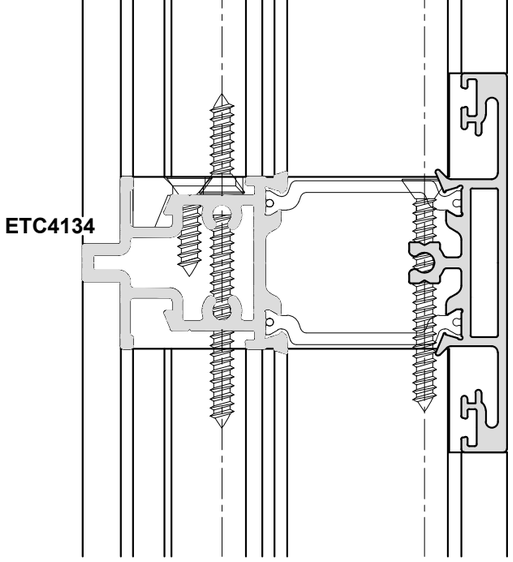

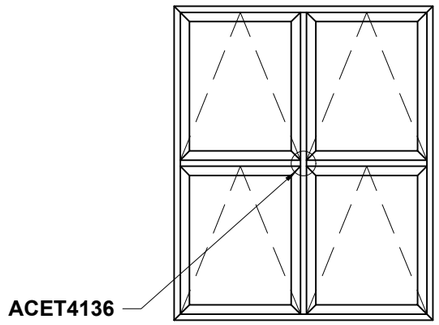

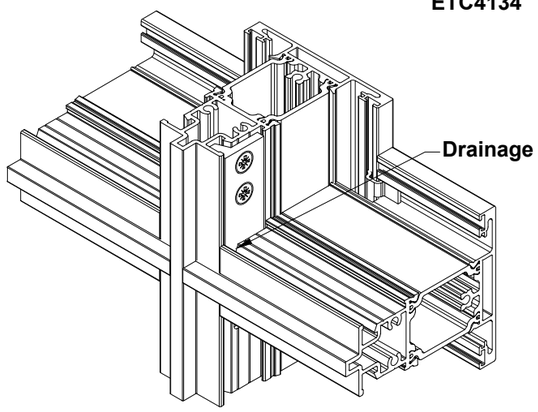

Important Fabrication Note:
All joints shall be sealed using ACSIL04

Do Not Scale From This Drawing

ETC4132 & ETC4133 Dummy Transoms

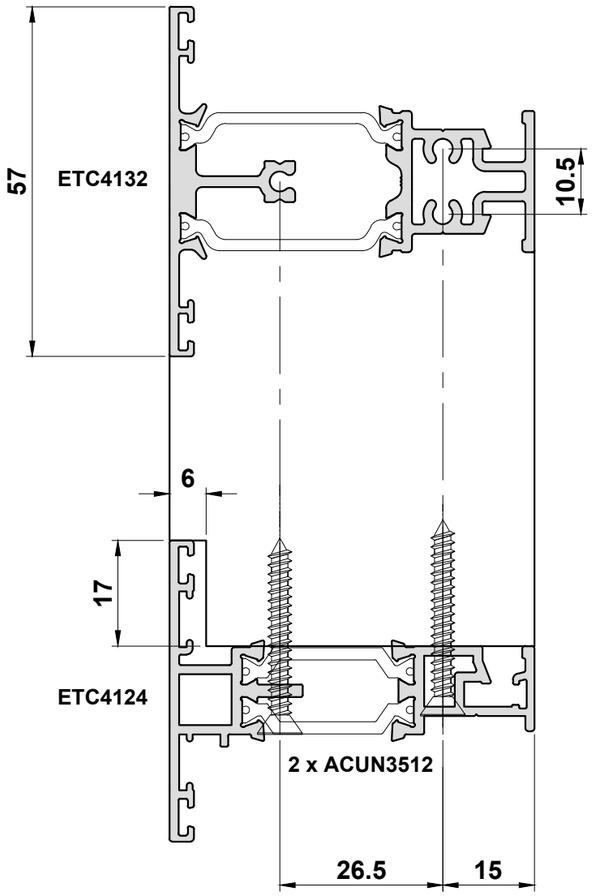

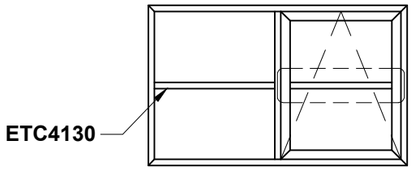

Note:
End mill cutters can be ordered through Smart Systems Ltd.
Please contact the Technical Department for an order form.
Standard delivery is 2-3 weeks approx.

Important Fabrication Note:
All joints shall be sealed using ACSIL04

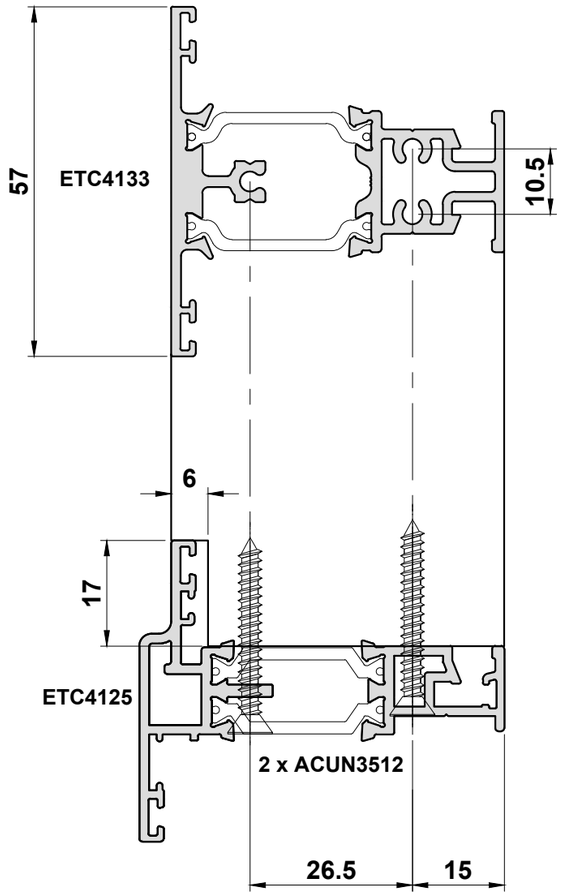

Friction Stay Details

16mm Stack Stays

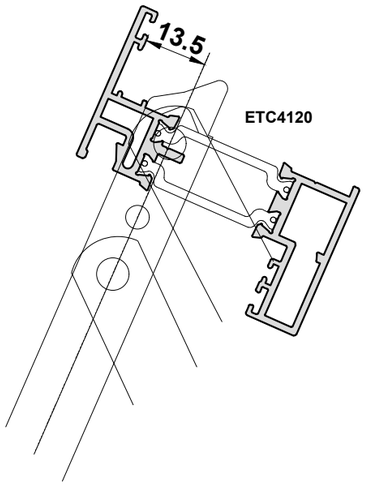

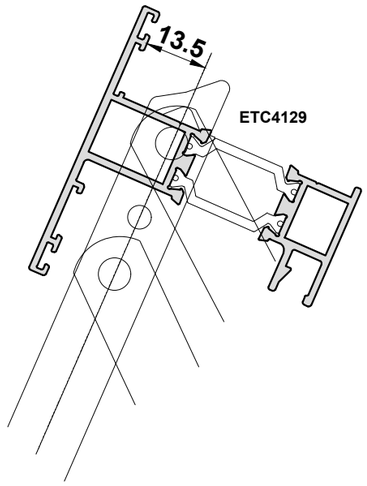

13mm Stack Stays

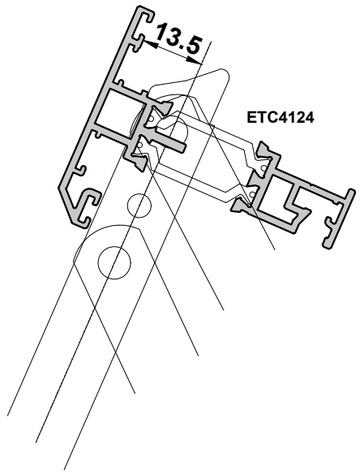

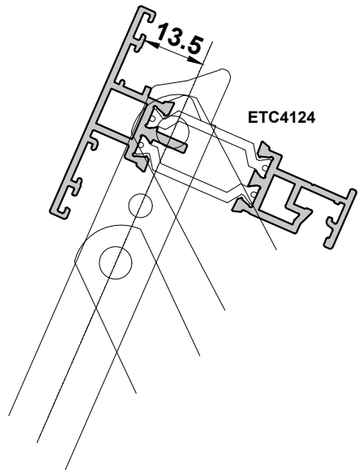

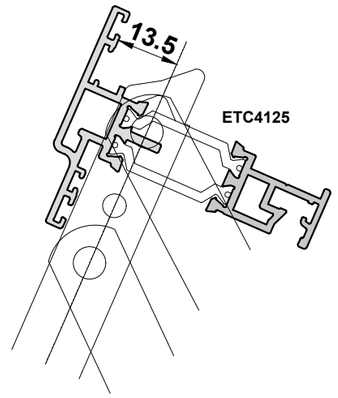

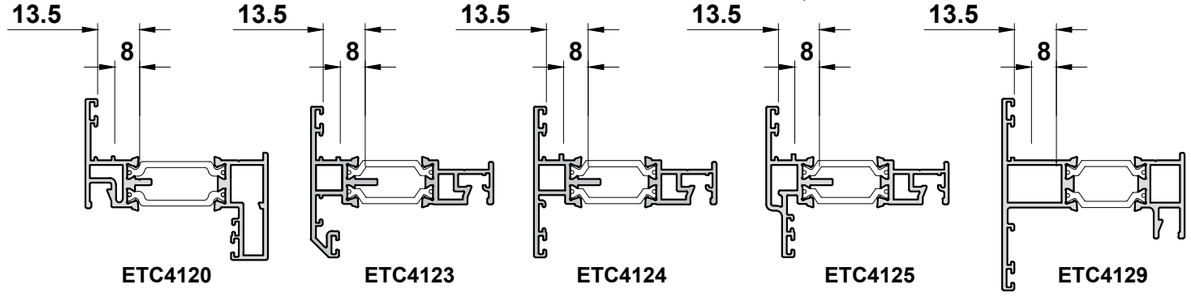

ETC4120 & ETC4129 = ACET4904
ETC4123, ETC4124 & ETC4125 = ACET391

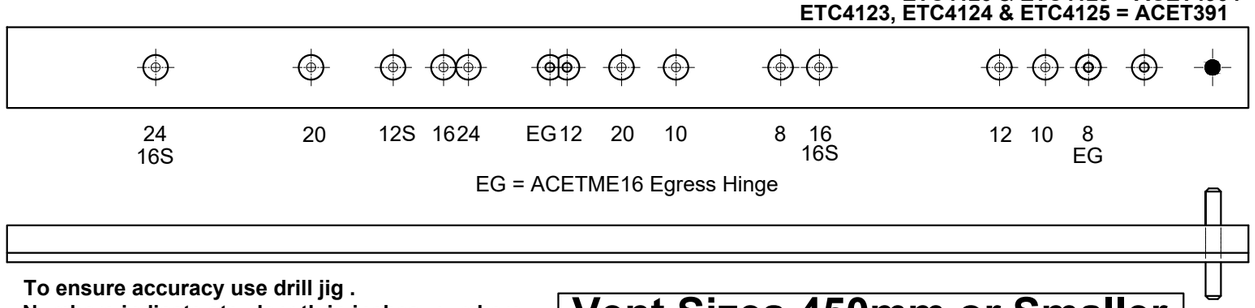

EG = ACETME16 Egress Hinge

To ensure accuracy use drill jig .
Numbers indicate stay length in inches, numbers followed by an 'S' are used for side hung stays.

ACET070 = Recommended Screw

Vent Sizes 450mm or Smaller to be Reduced by 2mm

ETC4110
ETC4111
ETC4112
ETC4113
ETC4115
ETC4117

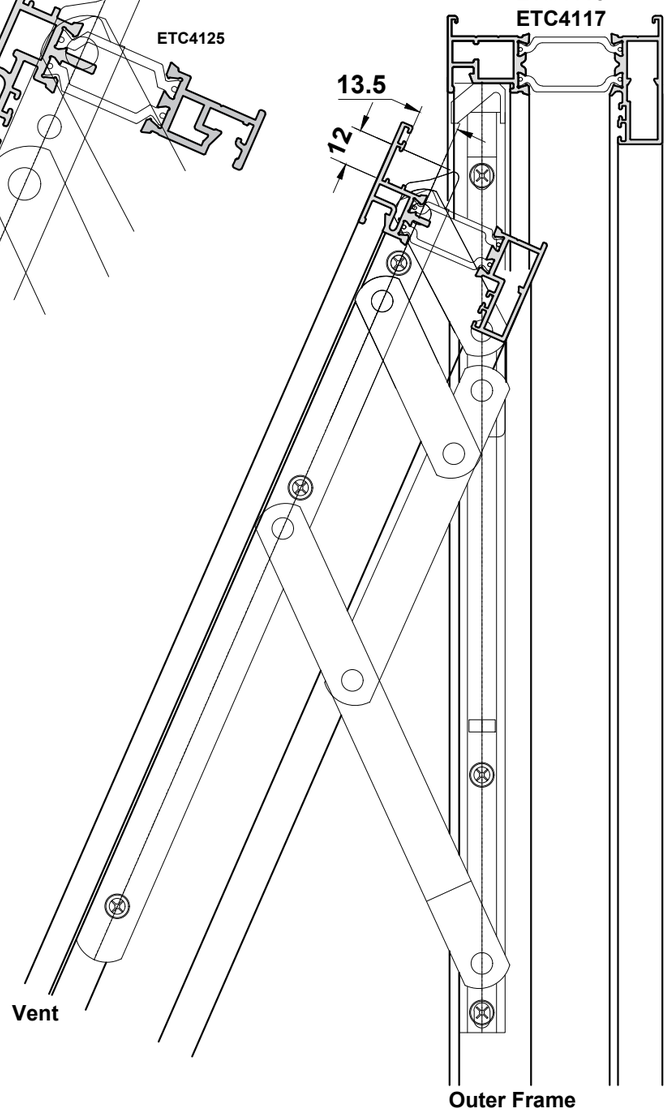

Do Not Scale From This Drawing

Egress Hinge Details

Example Opening Detail

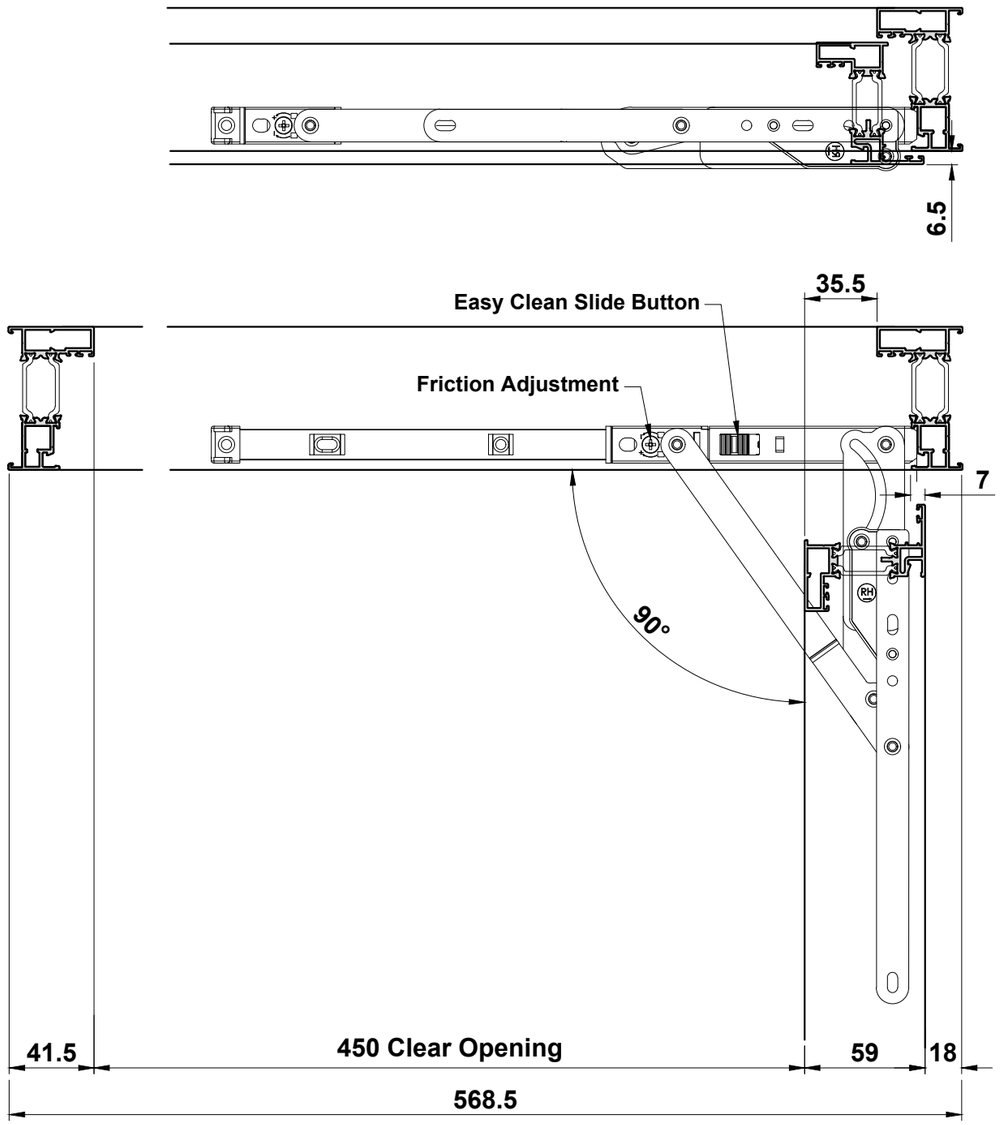

For further information regarding clear openings, please see the Smart Systems' White Paper Document B

The benefits of these hinges are:

- True 90° opening angle
- Achieves minimum fire escape requirement on smaller windows
- Can be moved into easy clean position, with automatic reset on closing
- Superior carrying weight (40kg max)
- The 345mm length replaces the current 305mm & 406mm hinges
- Tested to BS EN1670 and exceeded Grade 5 for ultimate corrosion resistance
- Tested to EN1191 over 25,000 cycles under 40kg.

Easy Clean Position

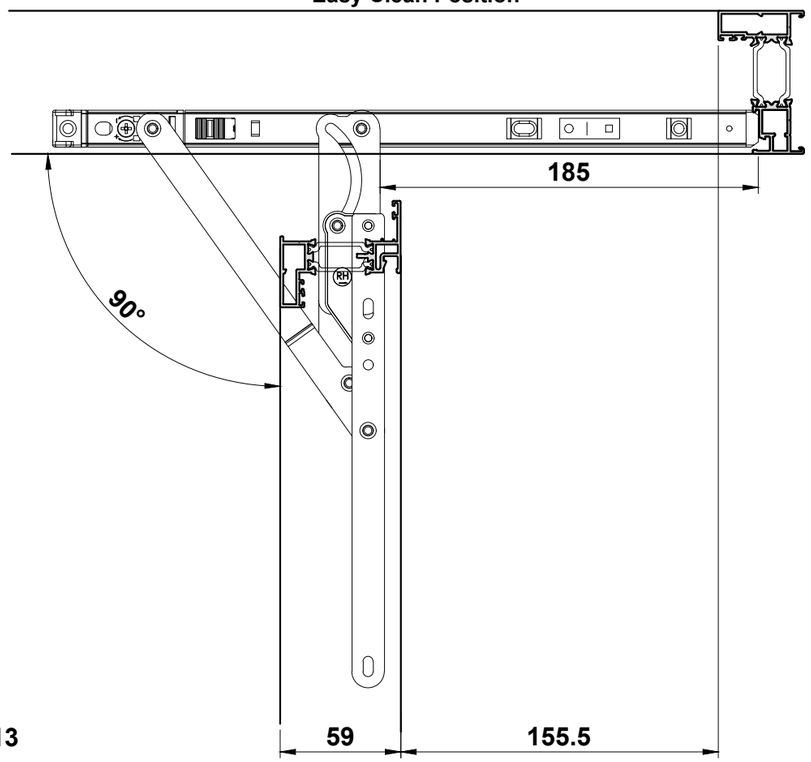

ACETME16 & ACETME13 Egress Hinges

Side Hung	Sashes	Jig	Max. Vent	Width		Typical
			Weight (kgs)	Minimum	Maximum	Height
ACETME13	ETC4124 & ETC4125	ACETME93	40	365	865	-
ACETME16	ETC4120 & ETC4129	ACETME96				

Security Hinge Protectors & Pull-In Blocks

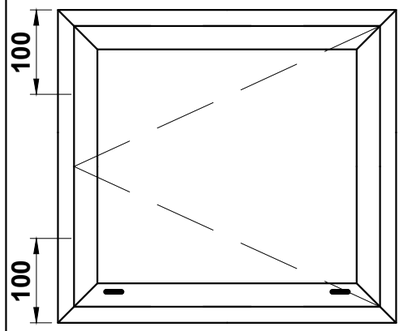

Please Note:

- 2 pairs per opening vent to be fitted to hinged side of window
- Each pair must be fitted with the hook centre within 100mm of each hinge

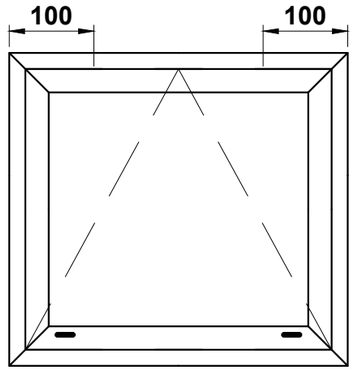

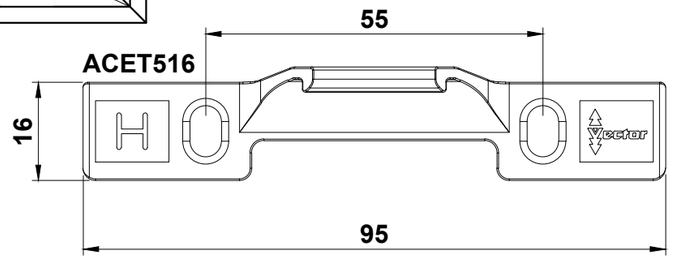

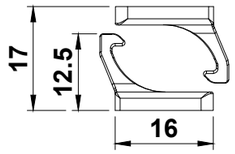

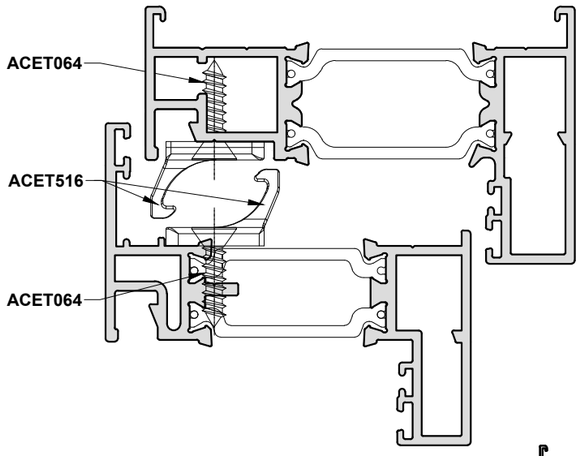

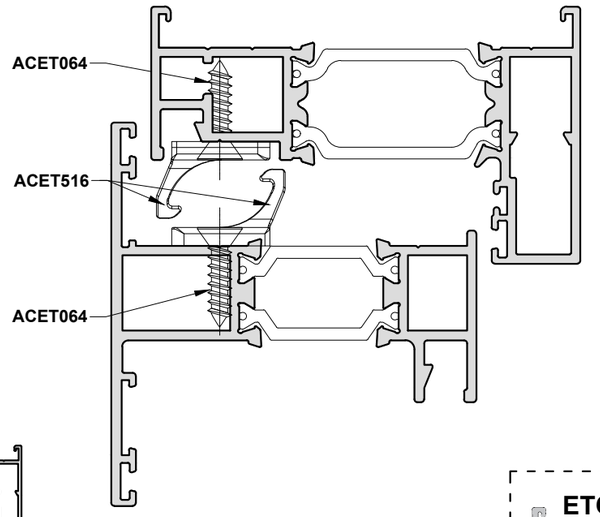

Pull In Block		
Sash	Pull In Block	'X'
ETC4120	ACET652	17
ETC4124	ACET352	14.5
ETC4129	ACET652	17

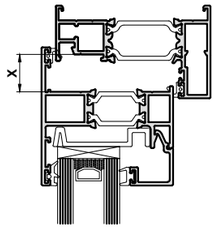

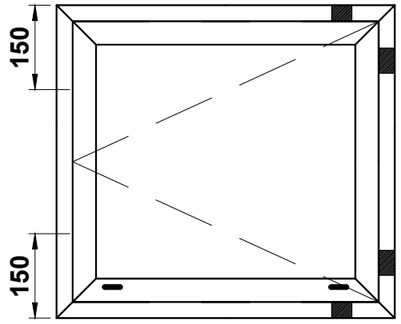

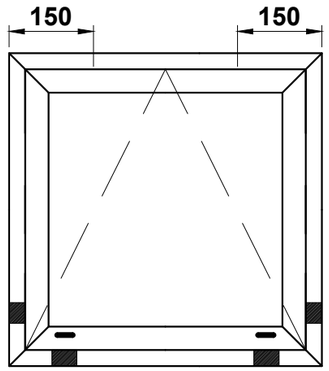

Please Note:

- 2 pairs per opening vent to be fitted to hinged side of window
- Each pair must be fitted with the wedge centre within 150mm of each hinge and in the centre of the window when sash height or width is greater than 800mm.
- When used with ACET516 and security takes priority, intall ACET652 centre within 200mm of hinge.

ACET4180

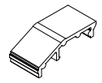

Please note that for fitting each sash, we recommend using 4 x ACET4180, as shown in the images above.

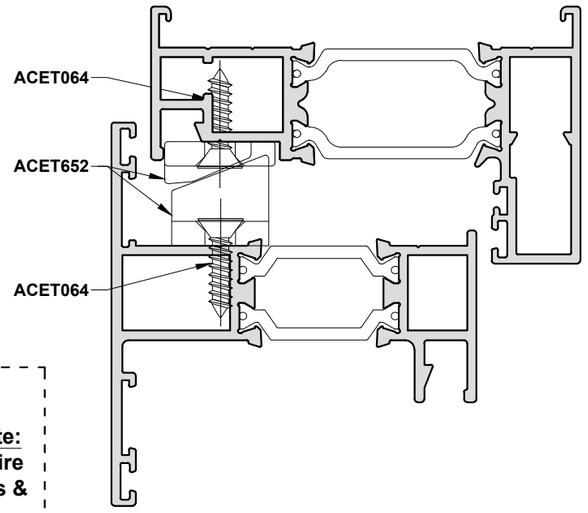

ETC4124
ETC4125

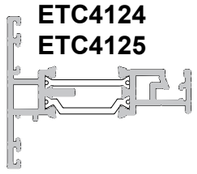

Important Fabrication Note:
ETC4124 & ETC4125 require ACET513 Hinge Protectors & ACET352 Pull-In Blocks.

Do Not Scale From This Drawing

ACET4050 Hinge Details

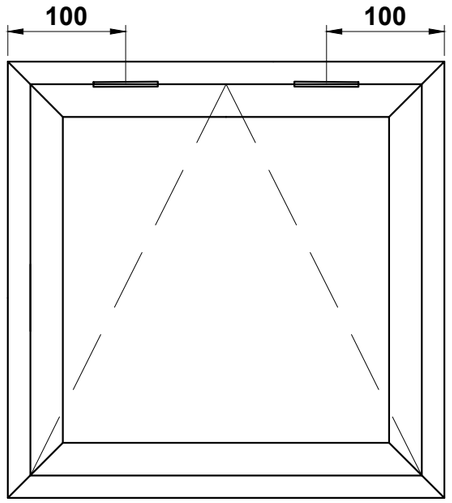

Please note: ACET4050 Butt Hinge is not covered by the Kitemark.

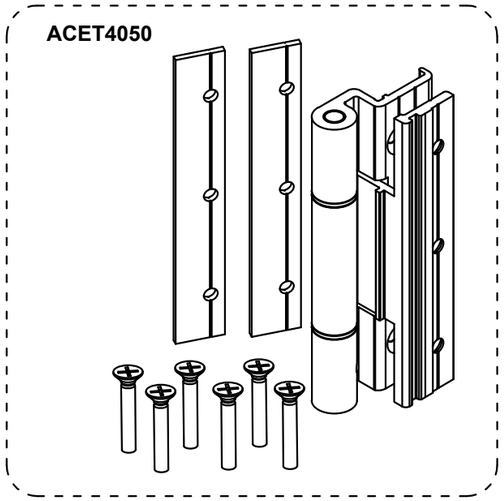

Top Hung Max. 50kg
Side Hung Max. 40kg

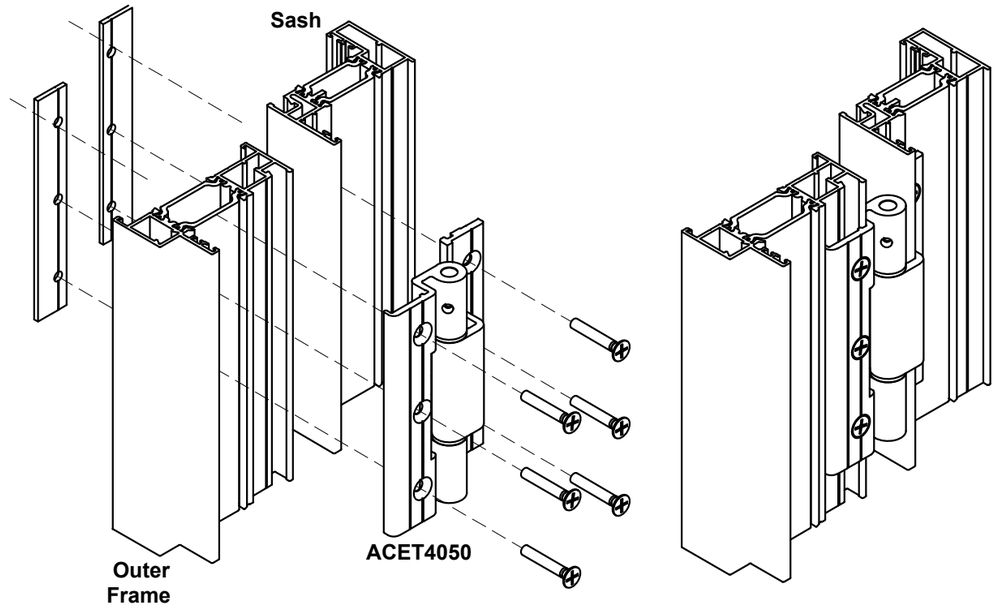

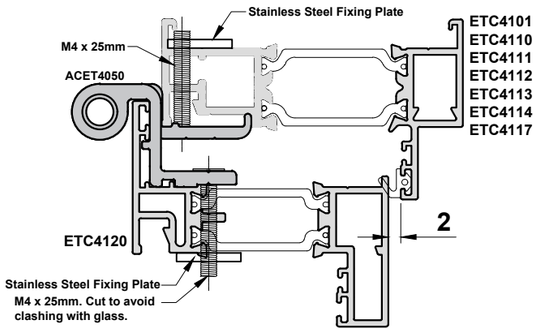

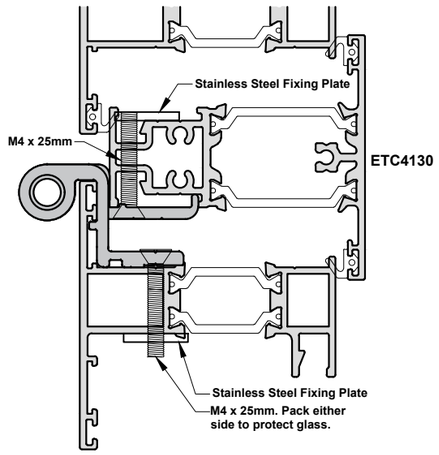

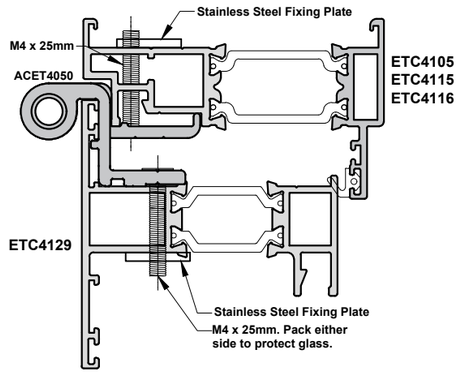

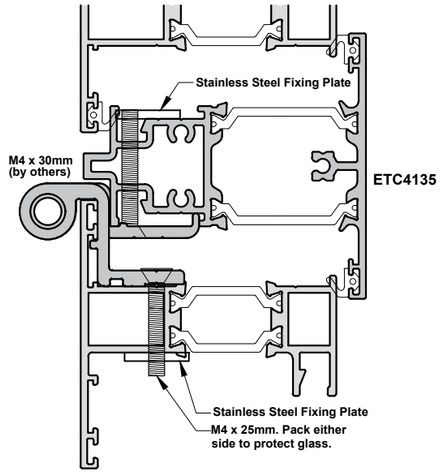

Important note:
ACET4050 Butt Hinge is not compatible with ETC4124 & ETC4125

Espag Locking Prep Detail

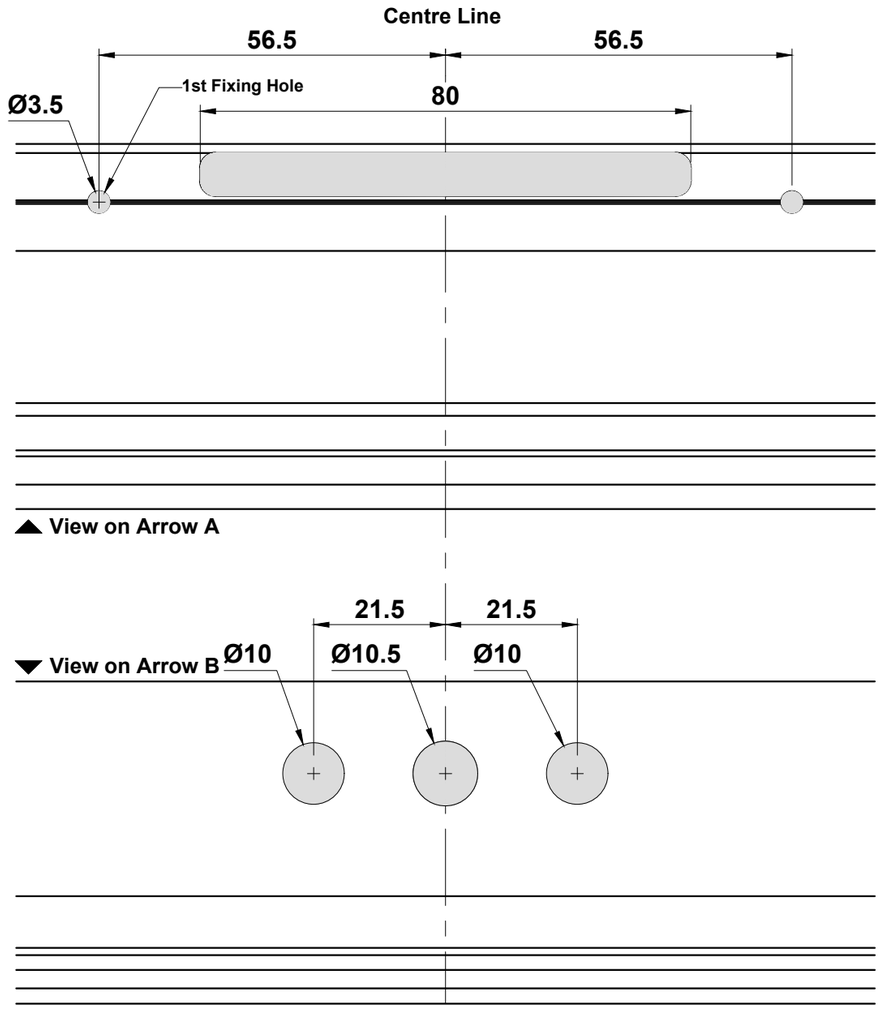

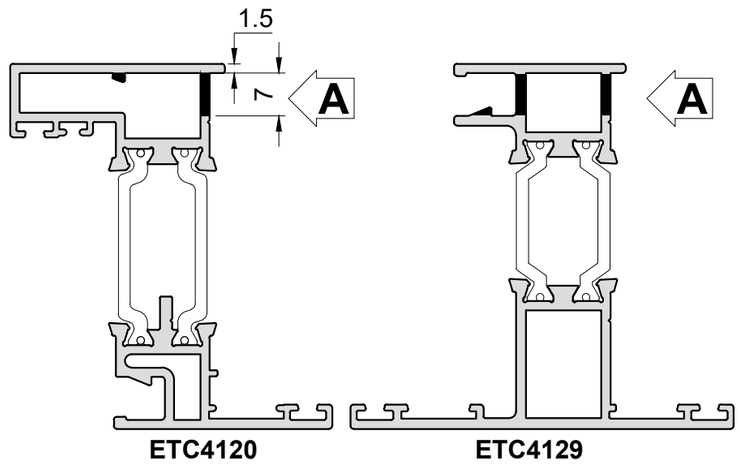

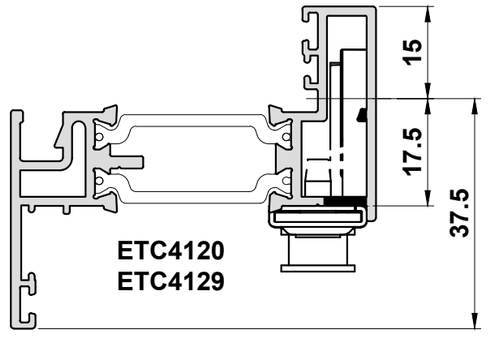

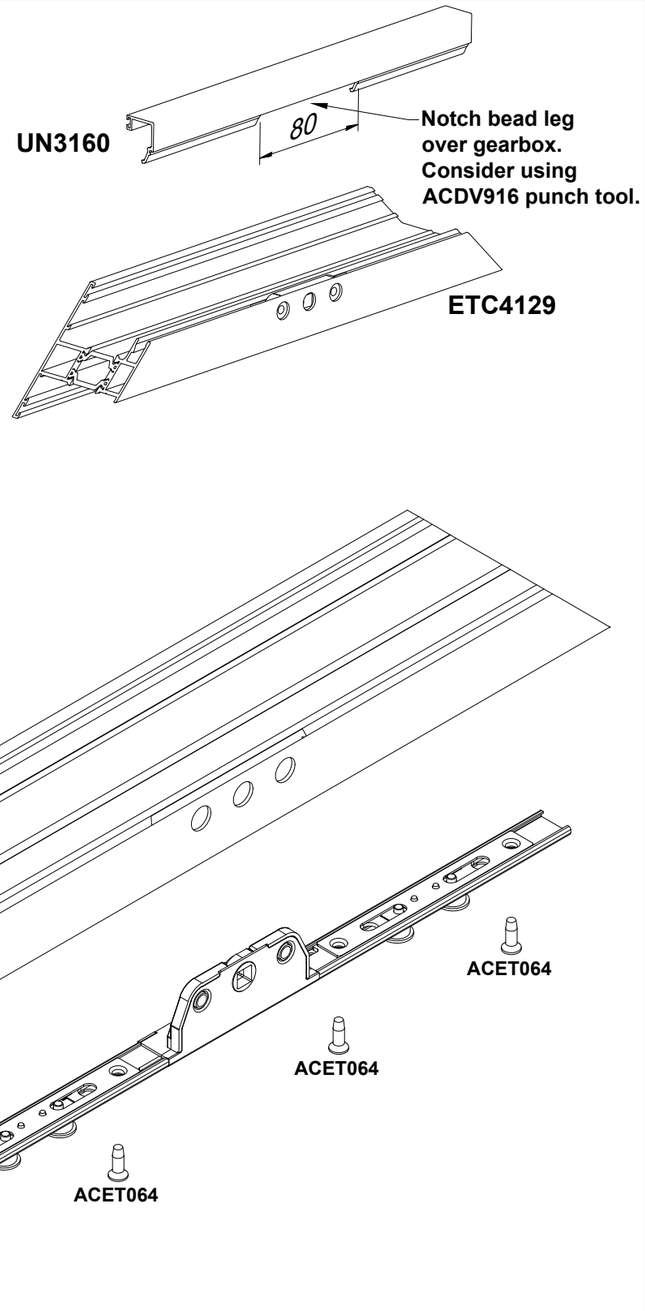

Do Not Scale From This Drawing

Lock & Handle Machining

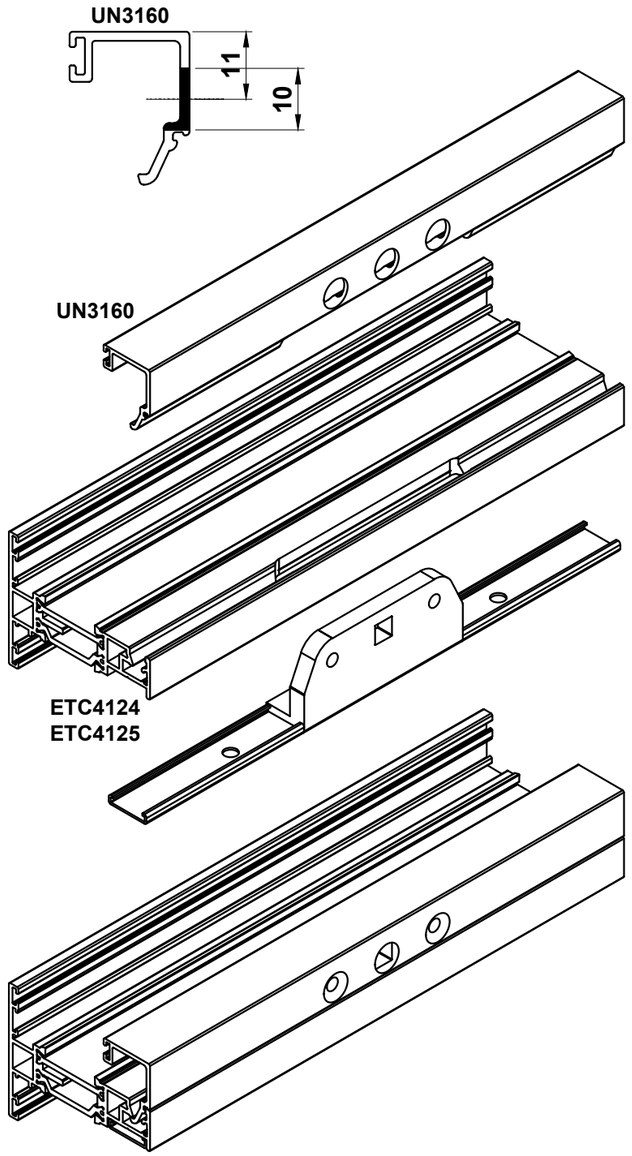

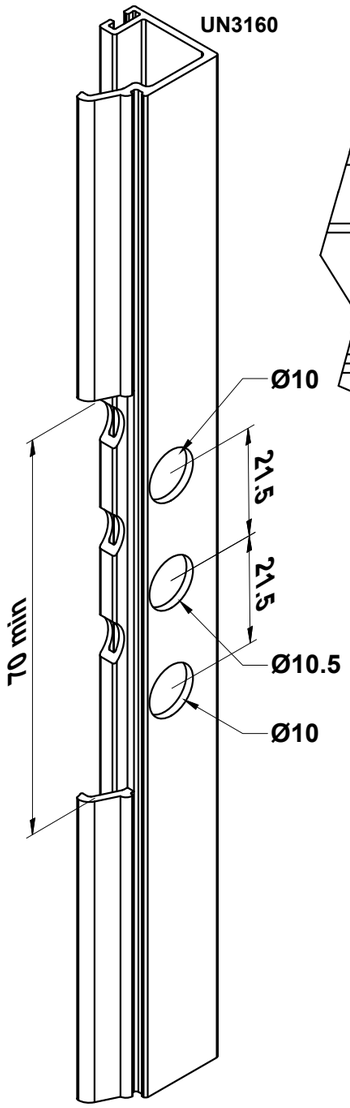

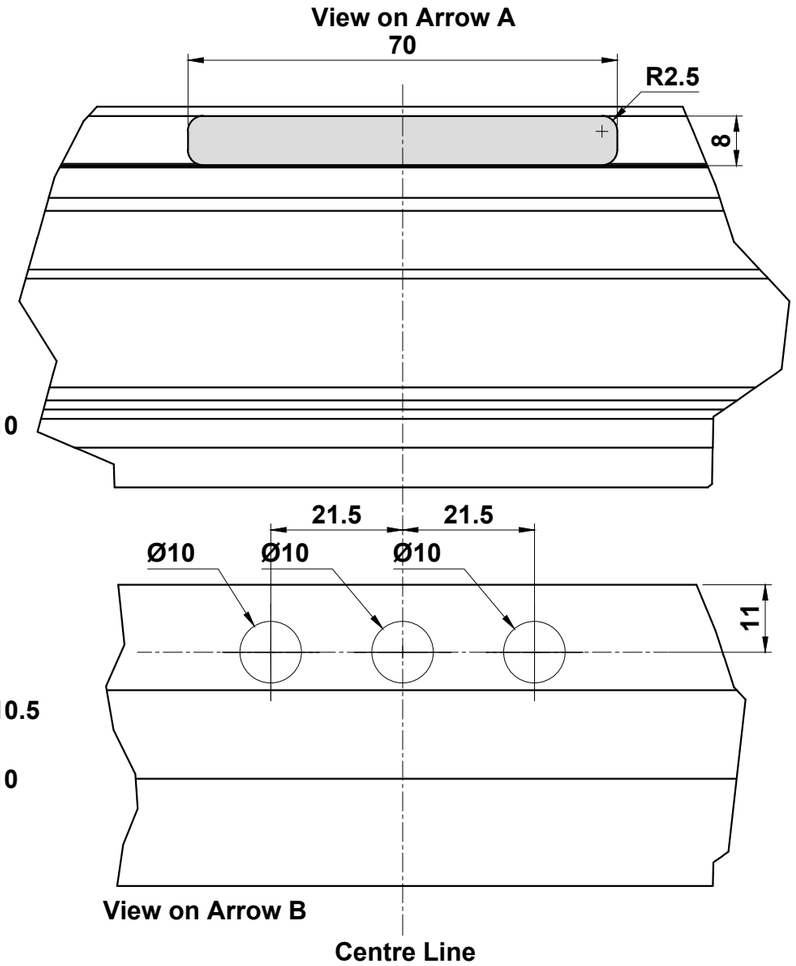

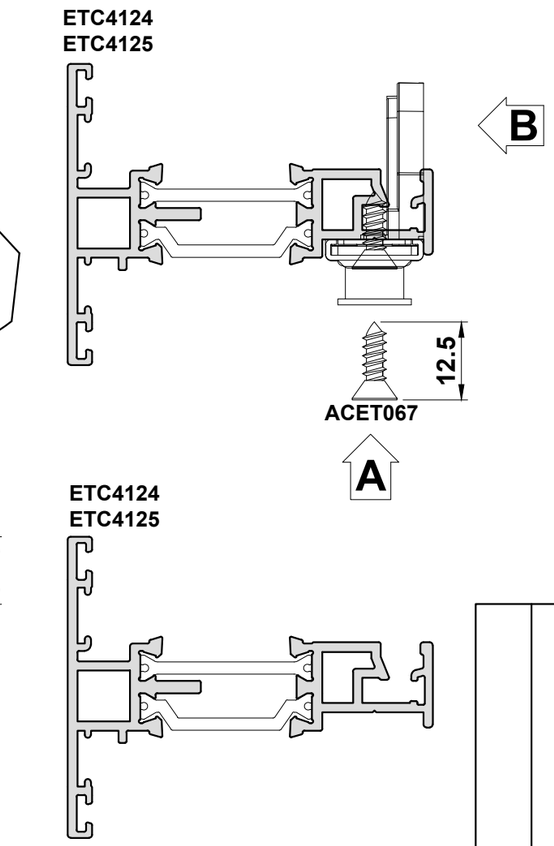

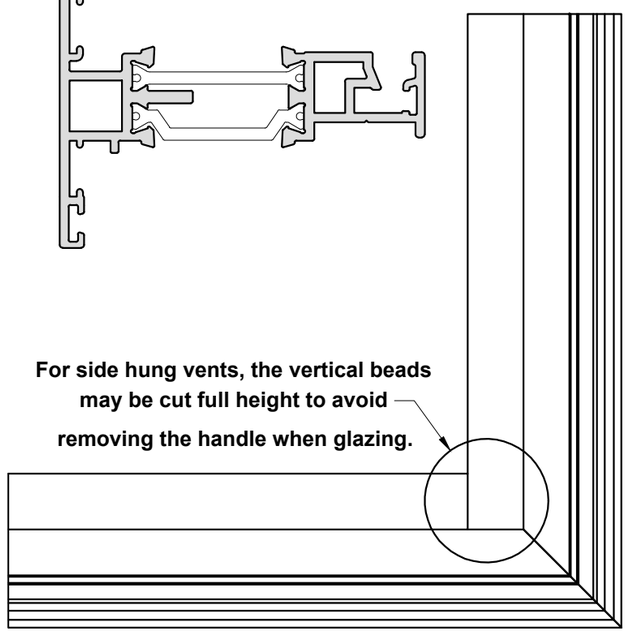

Lock & Handle Machining

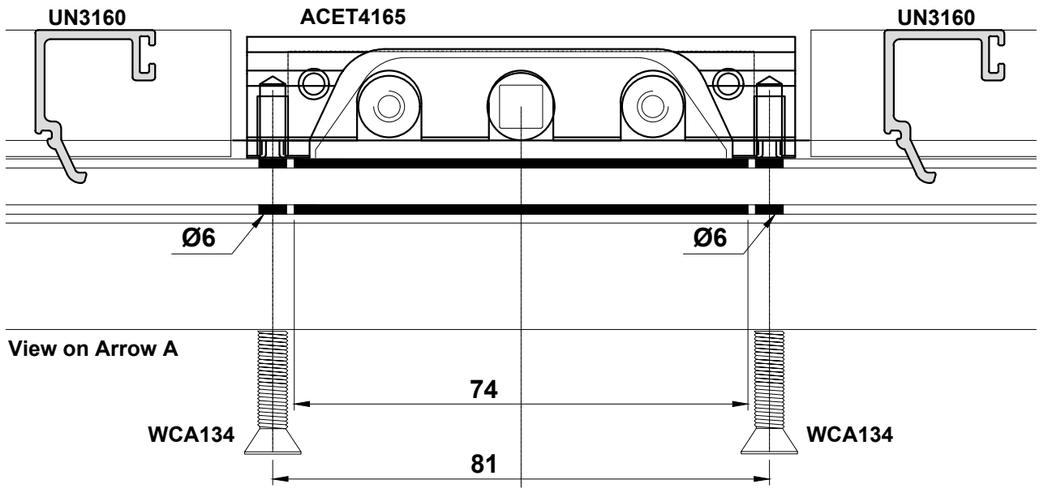

Secure ACET4165 into position before fixing the gearbox.

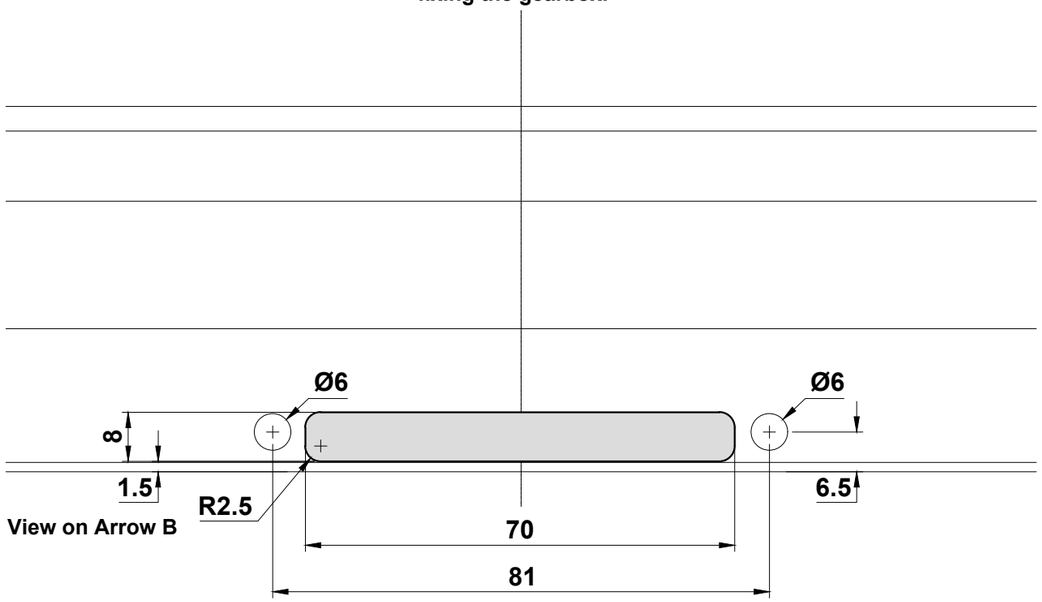

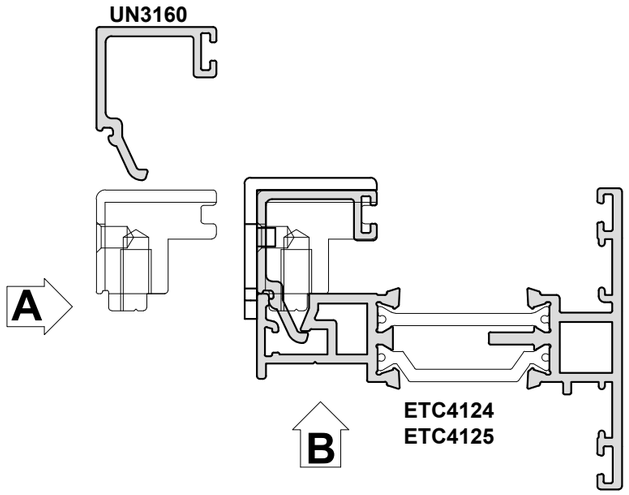

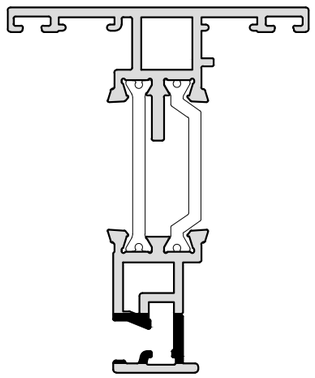

When using UN3160G, use ACET848 at handle block

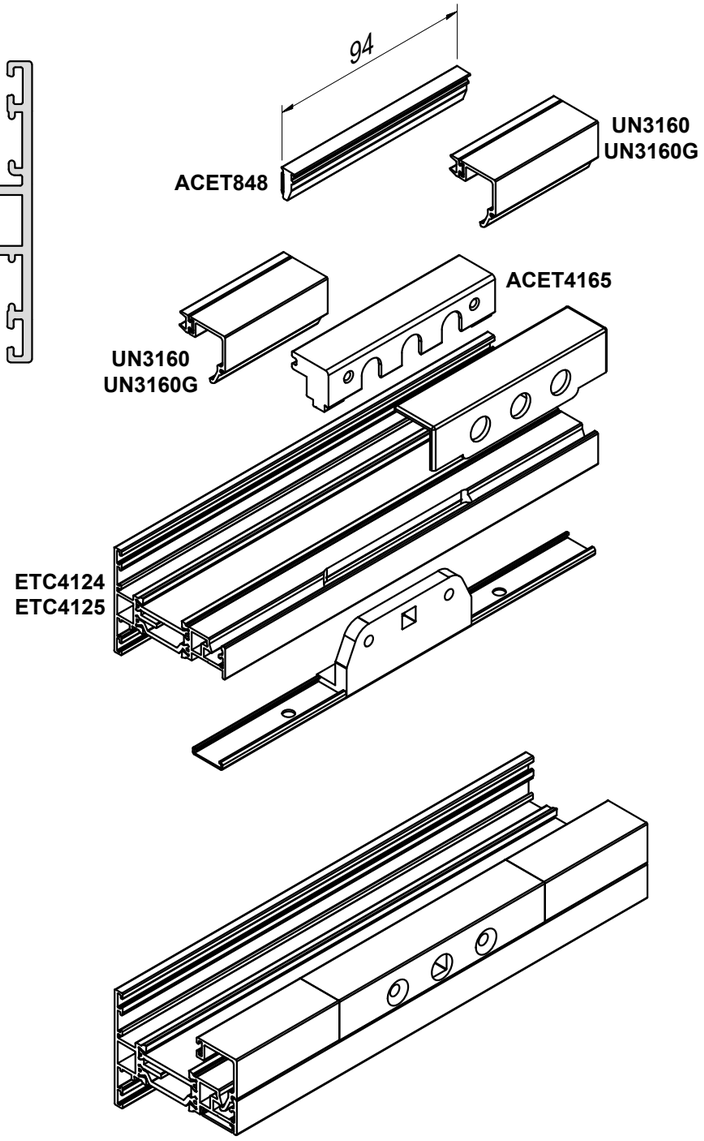

Do Not Scale From This Drawing

French Casement Assembly

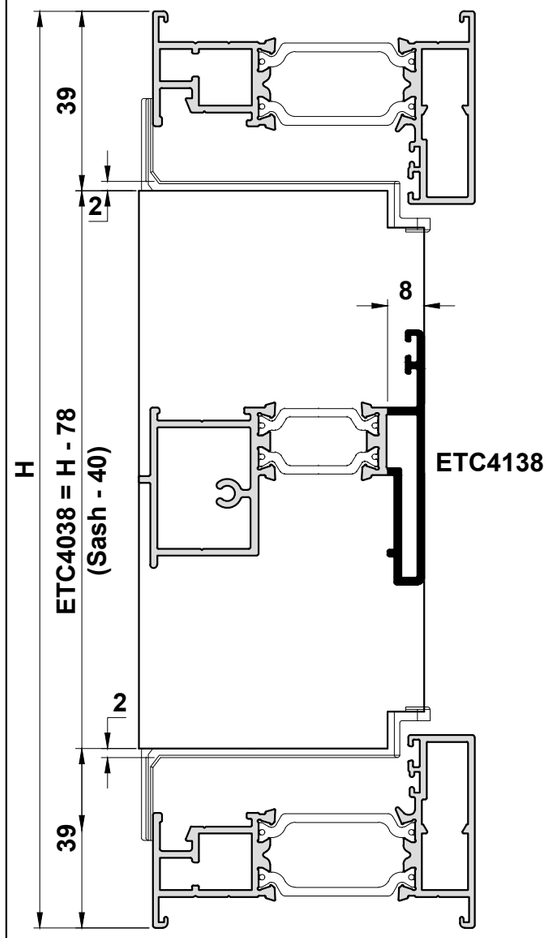

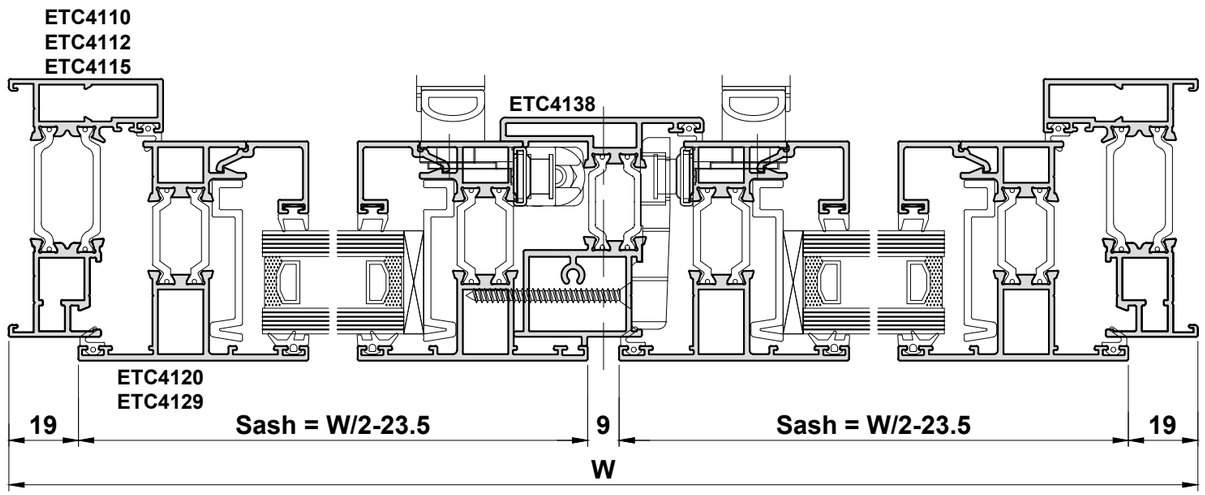

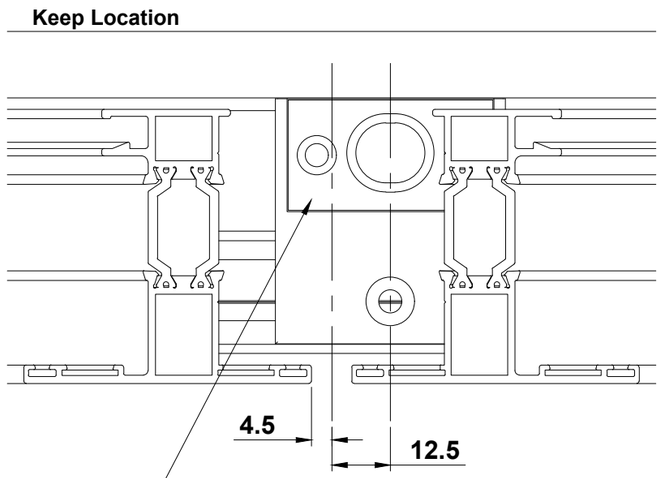

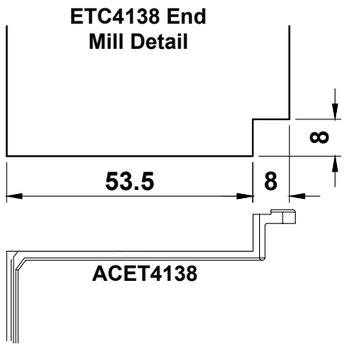

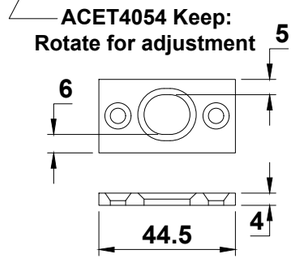

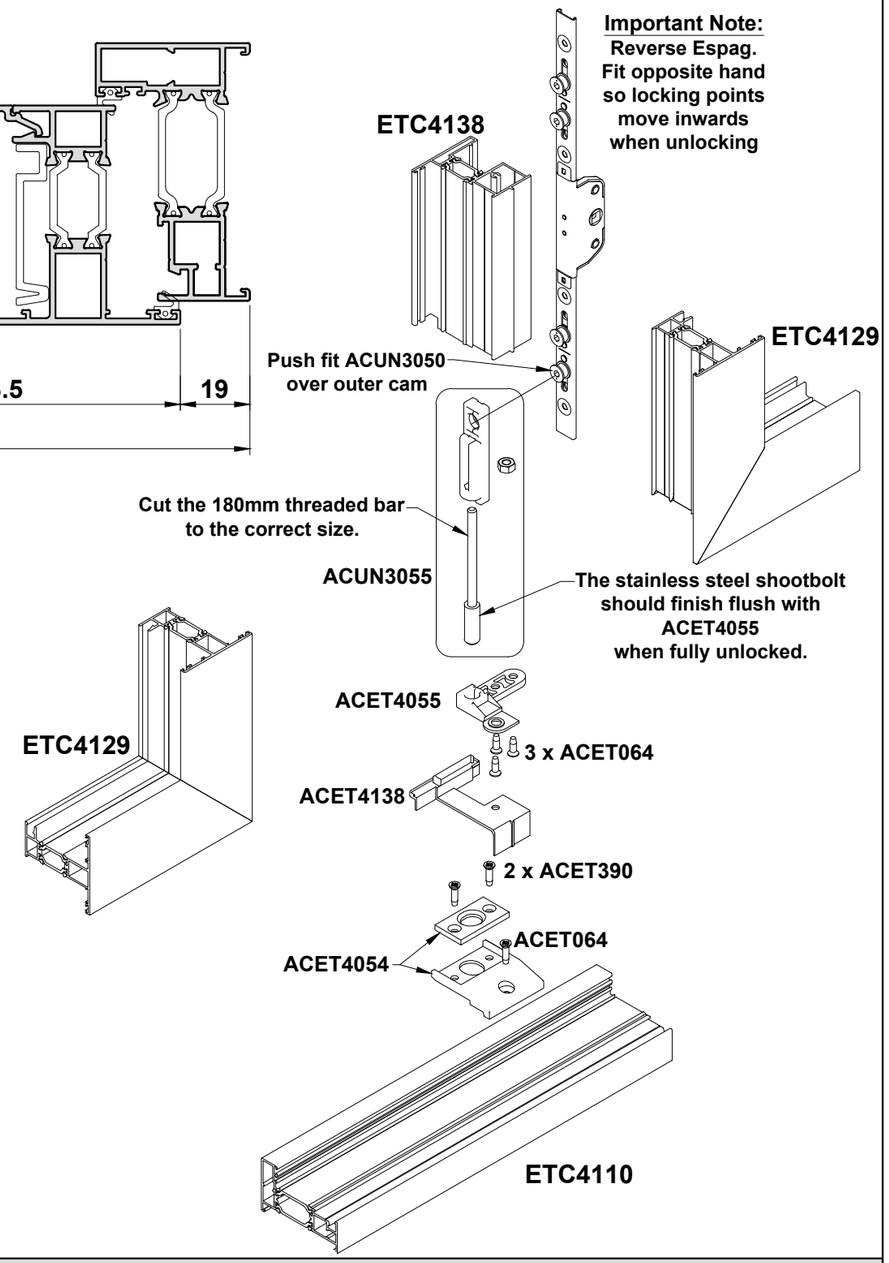

Do Not Scale From This Drawing

French Casement Assembly

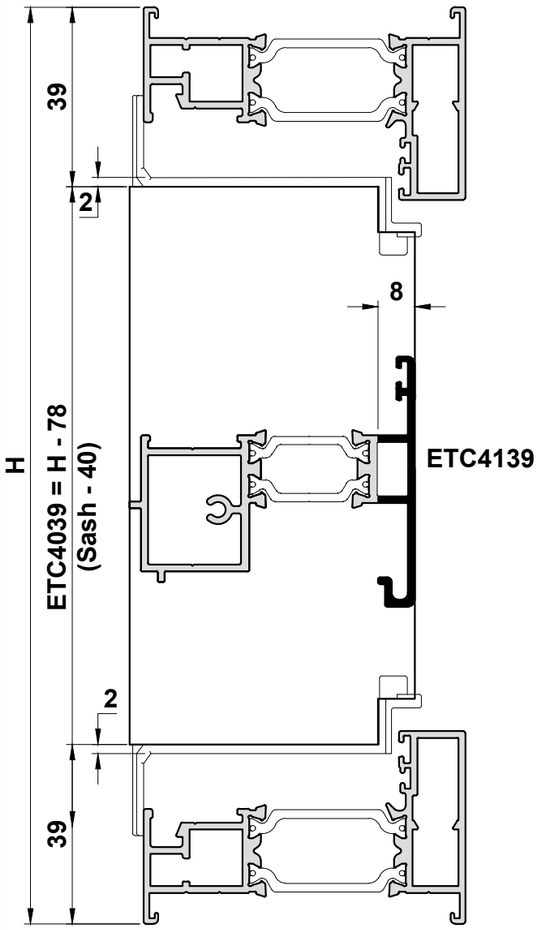

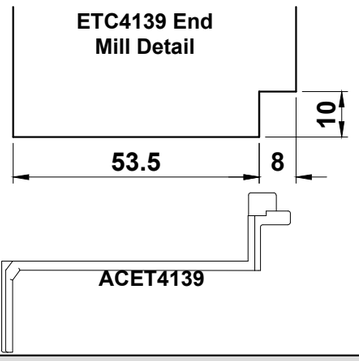

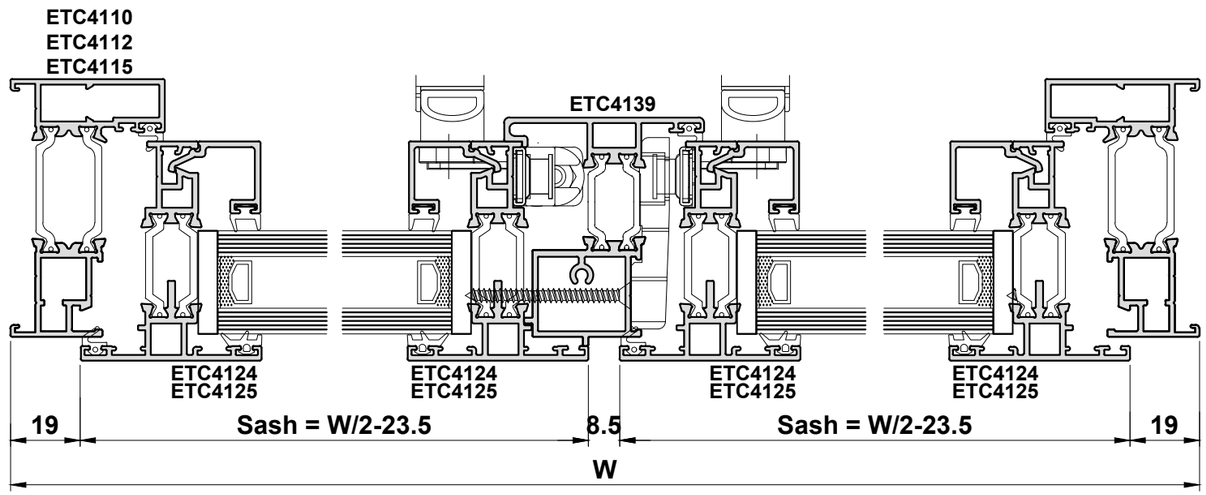

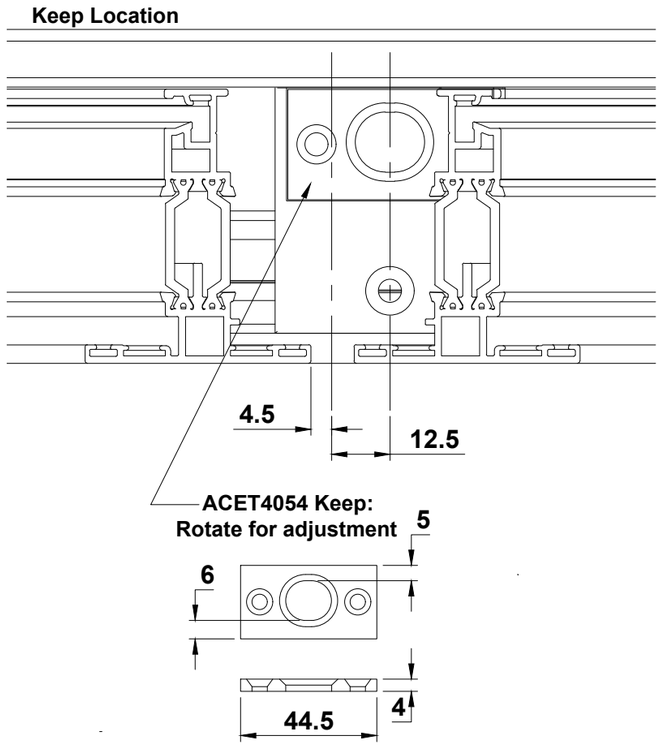

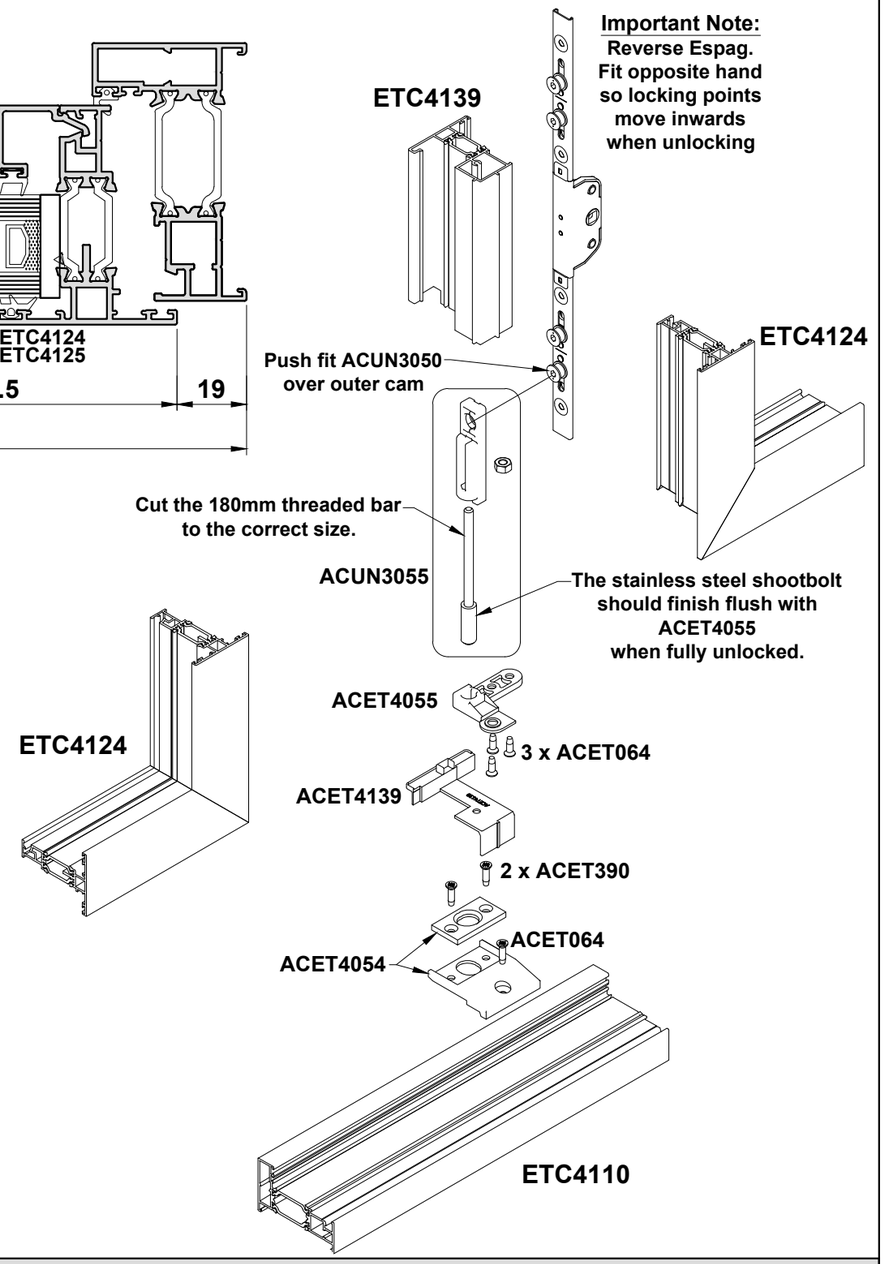

Do Not Scale From This Drawing

Glazing Chart

Externally Glazed

UN3162G

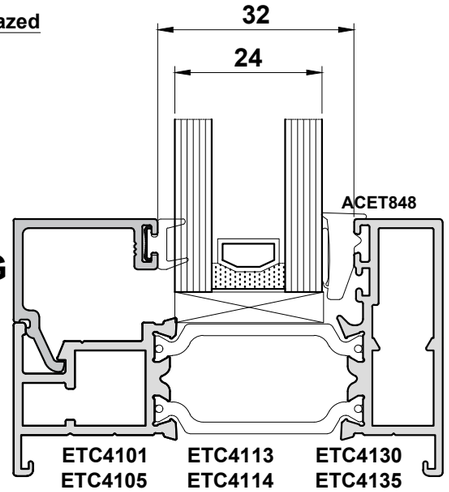

ETC4101
ETC4105
ETC4110
ETC4111
ETC4112

ETC4113
ETC4114
ETC4115
ETC4116

ETC4130
ETC4135
ETC4136

UN3164G

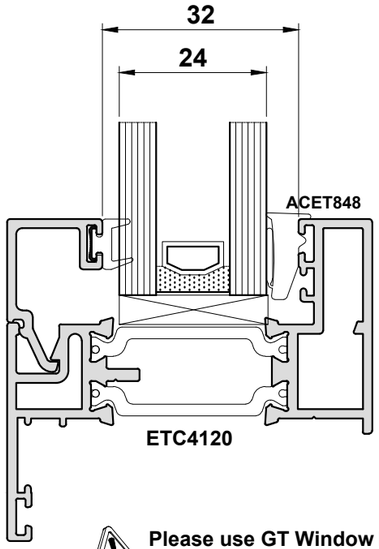

Please use GT Window Products glass clips for externally glazed profiles.

Internally Glazed

* ACET841 not required for the below:
- ETC4124G
- ETC4129G

UN3162G

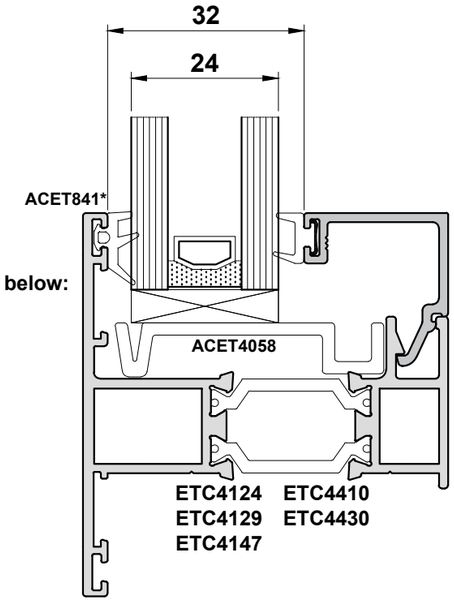

ETC4124
ETC4129
ETC4147

ETC4410
ETC4430

UN3162N

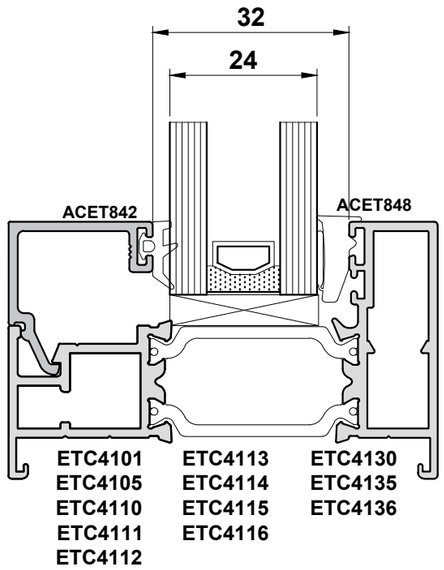

ETC4101
ETC4105
ETC4110
ETC4111
ETC4112

ETC4113
ETC4114
ETC4115
ETC4116

ETC4130
ETC4135
ETC4136

UN3164

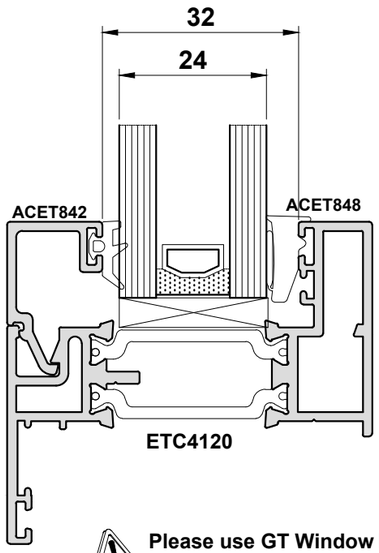

Please use GT Window Products glass clips for externally glazed profiles.

* ACET842 not required for the below:
- ETC4124G
- ETC4129G

Internally Glazed

UN3162N

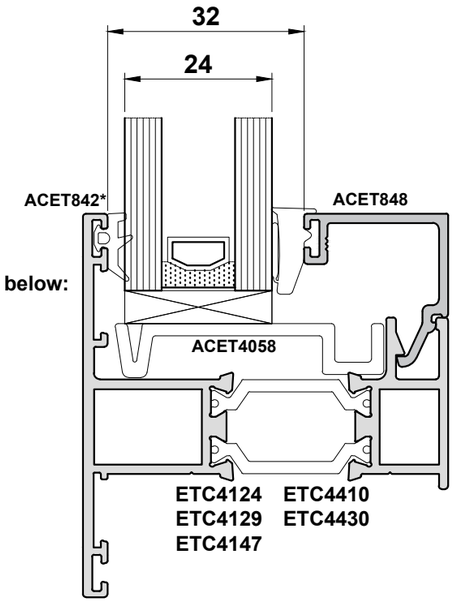

ETC4124
ETC4129
ETC4147

ETC4410
ETC4430

Glazing Chart

Externally Glazed

Externally glazed Alitherm 400 sections may be glazed using Quick-Glaze beads with a standard wedge gasket.

UN3160G

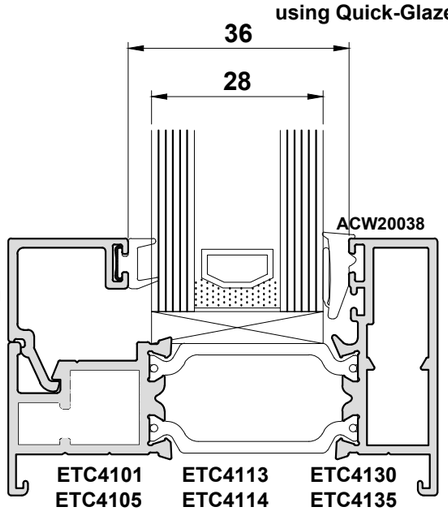

ETC4101 ETC4113 ETC4130
ETC4105 ETC4114 ETC4135
ETC4110 ETC4115 ETC4136
ETC4111 ETC4116
ETC4112

ETC4179G

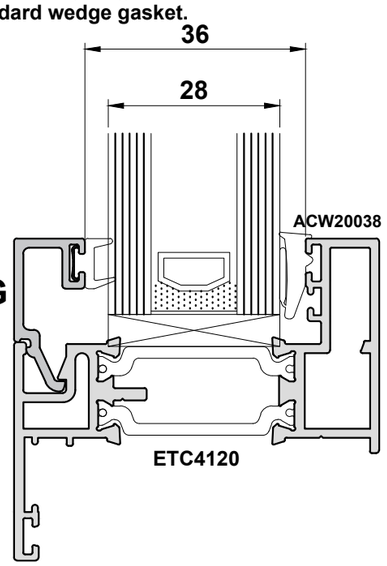

Please use GT Window Products glass clips for externally glazed profiles.

Internally Glazed

* ACET841 not required for the below:
- ETC4124G
- ETC4129G

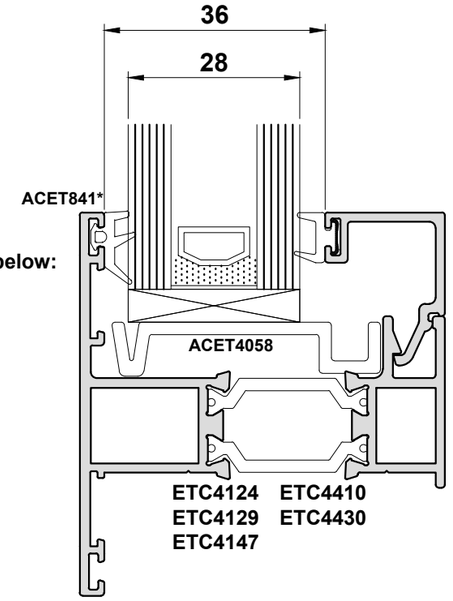

UN3160G

ETC4124 ETC4410
ETC4129 ETC4430
ETC4147

Externally Glazed without Integrated Gasket

UN3160

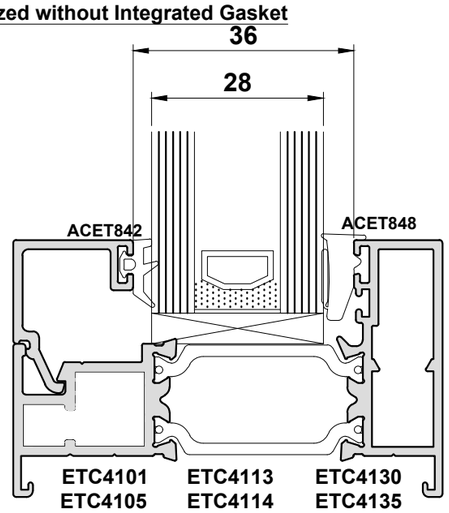

ETC4101 ETC4113 ETC4130
ETC4105 ETC4114 ETC4135
ETC4110 ETC4115 ETC4136
ETC4111 ETC4116
ETC4112

ETC4179

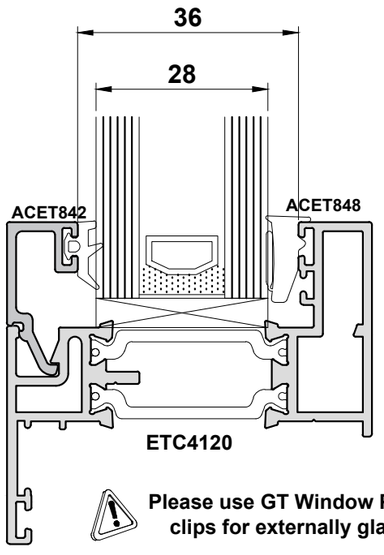

Please use GT Window Products glass clips for externally glazed profiles.

Internally Glazed

* ACET842 not required for the below:
- ETC4124G
- ETC4129G

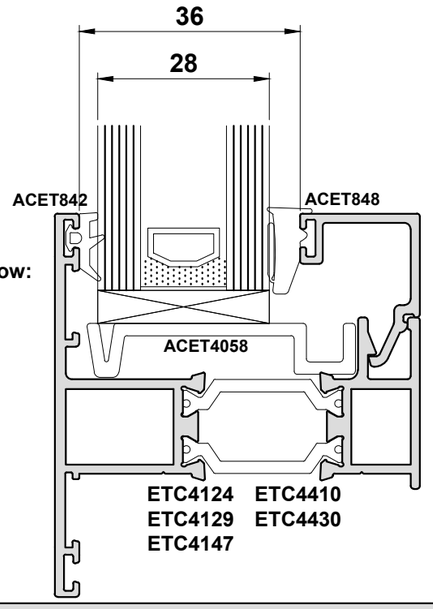

UN3160

ETC4124 ETC4410
ETC4129 ETC4430
ETC4147

Do Not Scale From This Drawing

Quick-Glaze Bead Glass Adjuster

Externally Glazed

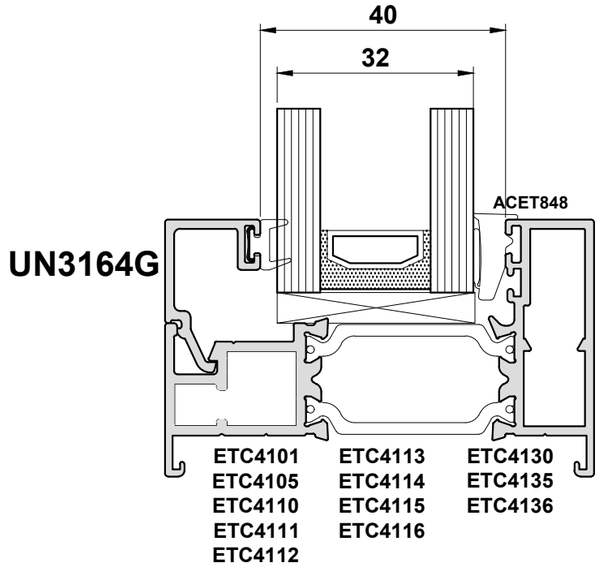

Internally Glazed

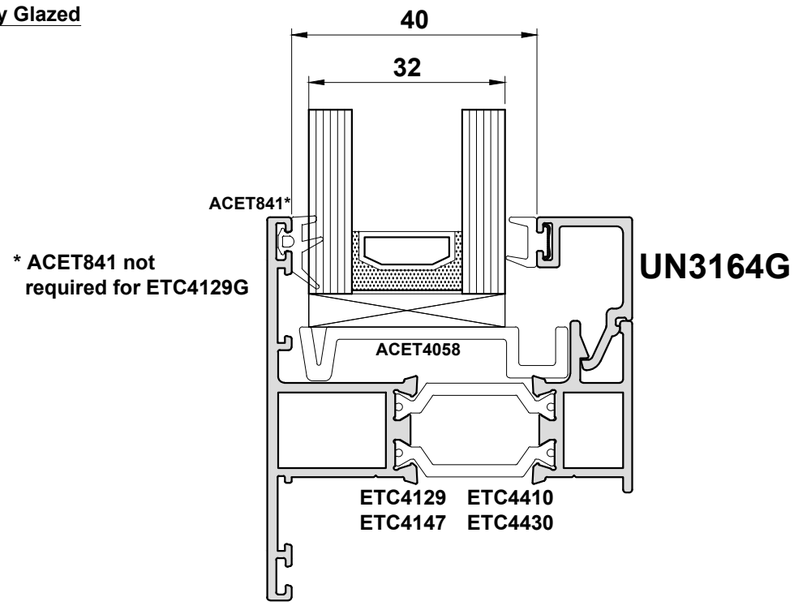

Externally Glazed

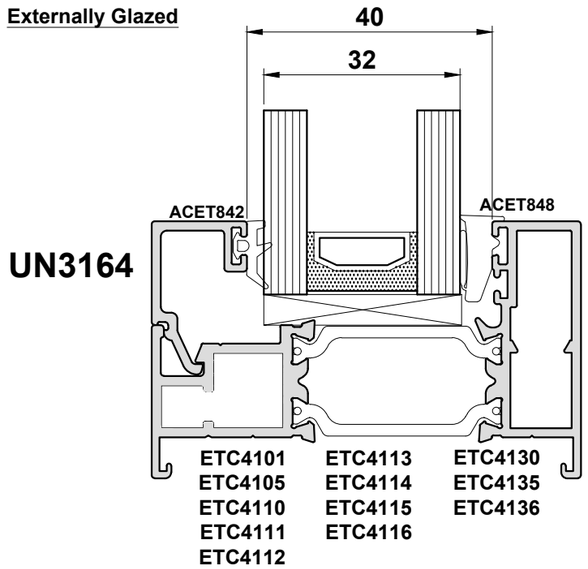

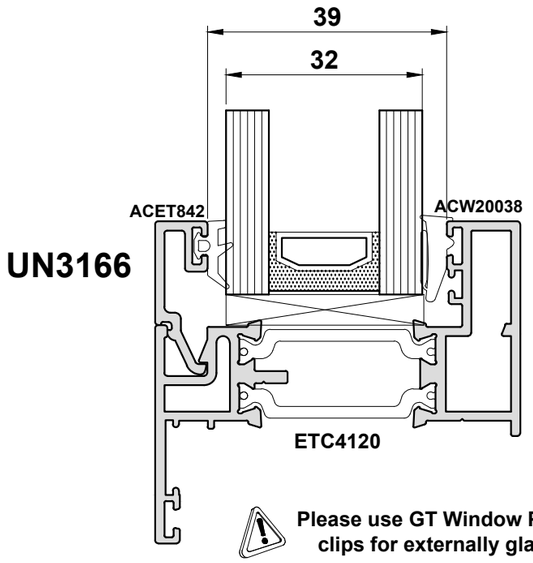

Please use GT Window Products glass clips for externally glazed profiles.

Internally Glazed

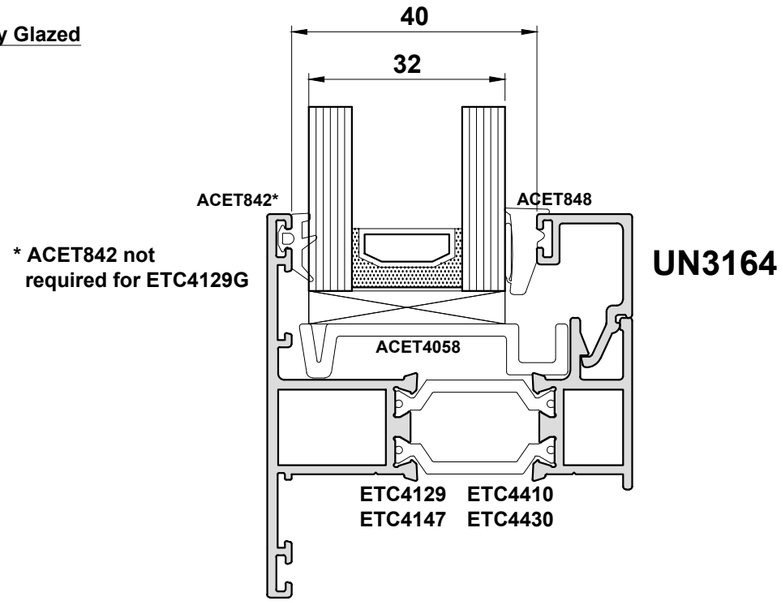

Externally Glazed

Externally glazed Alitherm 400 sections may be glazed using Quick-Glaze beads with a standard wedge gasket.

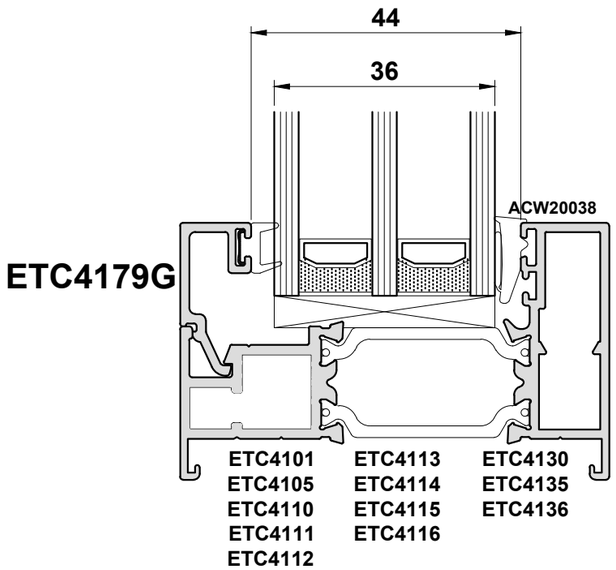

Please use GT Window Products glass clips for externally glazed profiles.

Internally Glazed

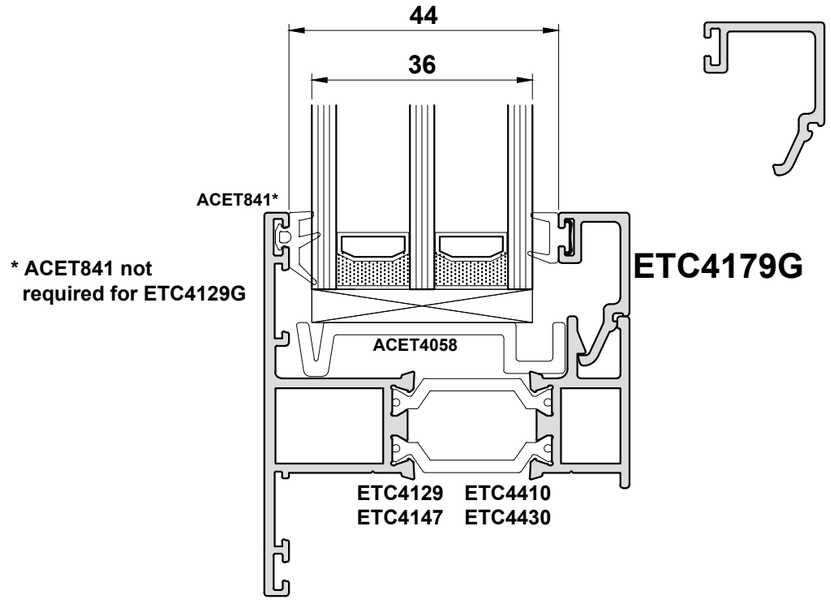

*** ACET841 not required for ETC4129G**

Externally Glazed without Integrated Gasket

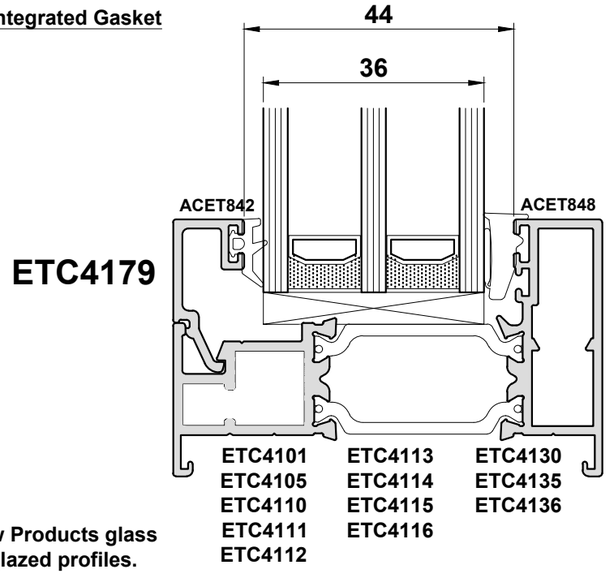

Please use GT Window Products glass clips for externally glazed profiles.

Internally Glazed

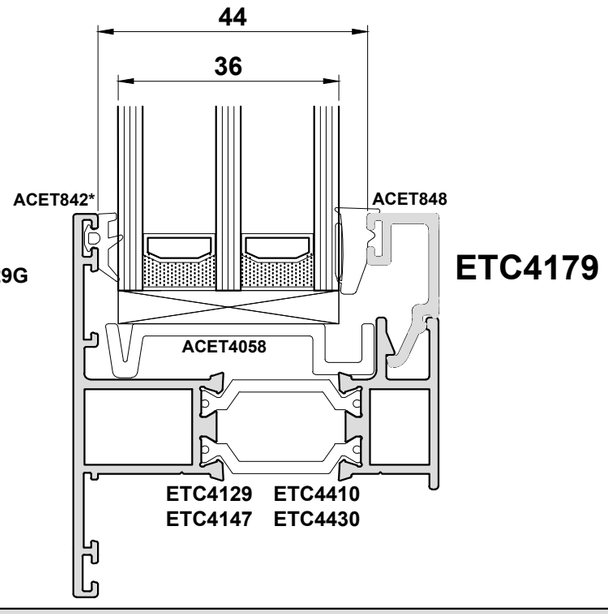

*** ACET842 not required for ETC4129G**

Externally Glazed without Integrated Gasket

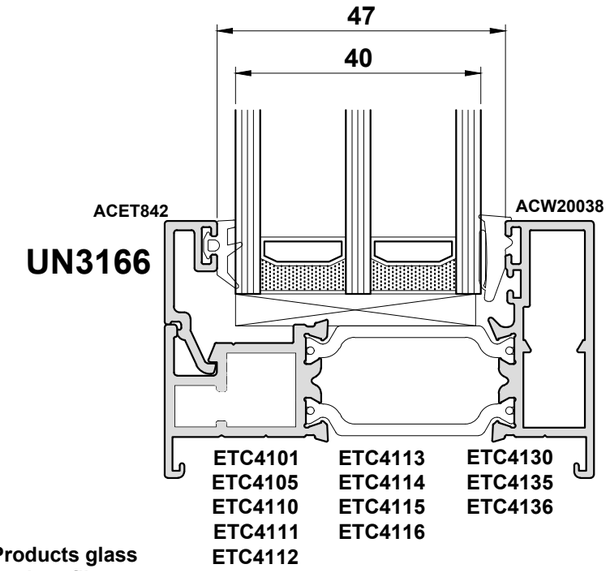

Please use GT Window Products glass clips for externally glazed profiles.

Internally Glazed

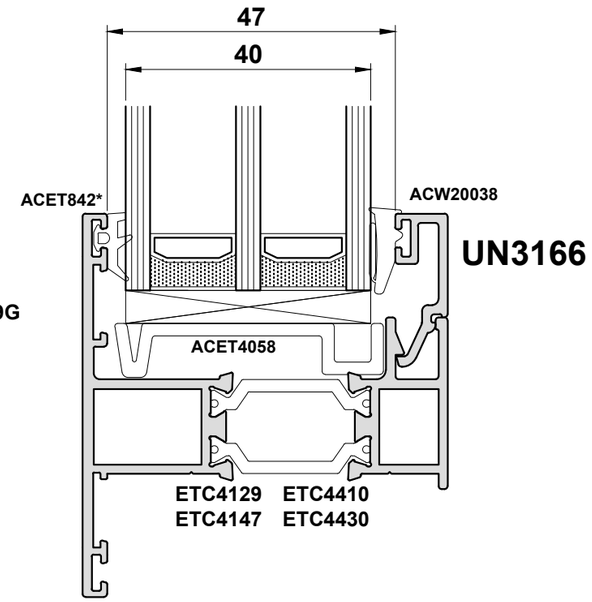

* ACET842 not required ETC4129G

Internally Glazed

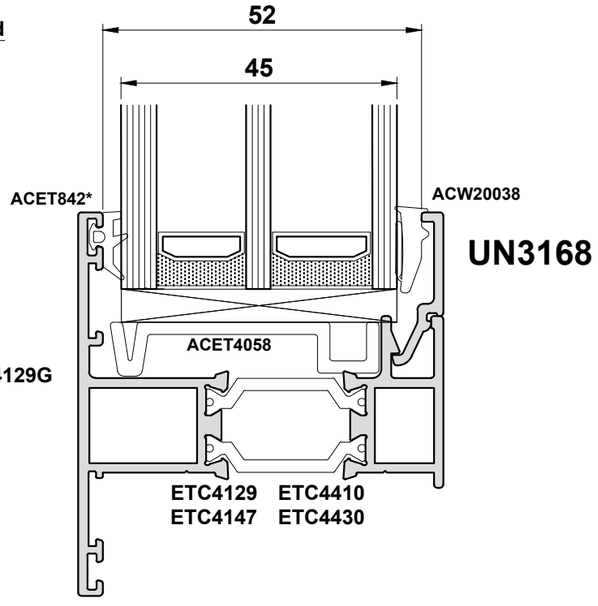

* ACET842 not required for ETC4129G

Internally Glazed

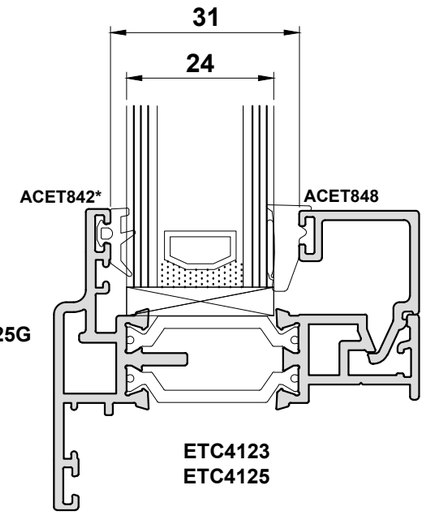

UN3160

* ACET842 not required for ETC4125G

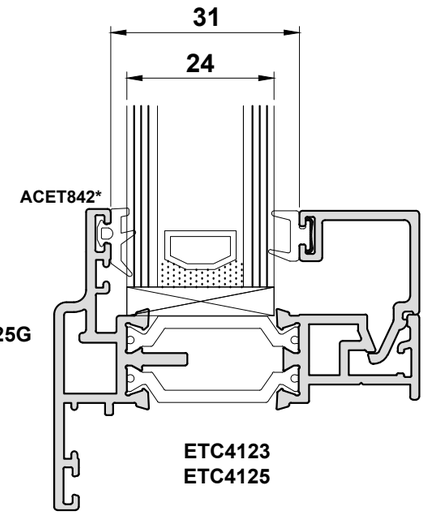

UN3160G

* ACET842 not required for ETC4125G

Internally Glazed

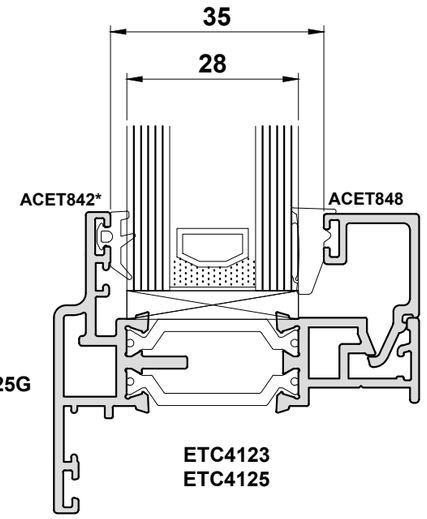

UN3164

* ACET842 not required for ETC4125G

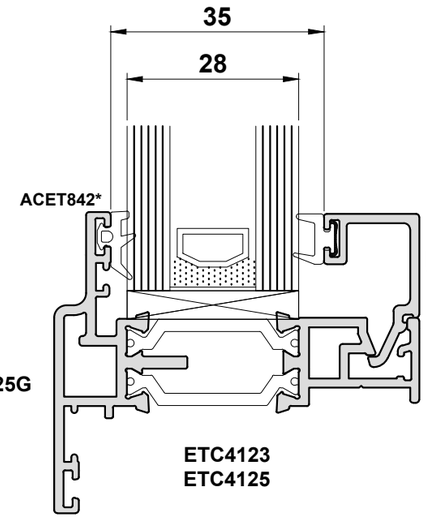

UN3164G

* ACET842 not required for ETC4125G

Important Note:
The handle must be fitted through UN3164 bead - see page E22

Quick-Glaze Bead Installation

QUICK-GLAZE BEAD INSTALLATION

1. INSTALL GLASS UNIT, ENSURING IT HAS BEEN PUSHED FORWARD TO ENGAGE COMPRESSION OF E GASKET.
2. BEGINNING WITH HORIZONTAL BEADS, LOCATE BEAD IN CLIP CHANNEL OF SASH AS SHOWN. INTEGRATED GASKET MAY REST AGAINST GLASS UNIT.
3. APPLY FIRM PRESSURE TO THE BEAD TO HOLD IN POSITION. THIS MAY CAUSE THE BEAD TO FULLY LOCK INTO POSITION.
4. USING A NYLON MALLET, TAP BEAD INTO CHANNEL WORKING FROM ONE END TO THE OTHER. PLEASE TAKE CARE AT THIS STAGE TO AVOID DAMAGE TO BOTH THE GLAZING UNIT AND THE BEAD.
5. REPEAT STEPS 2 - 4 TO INSTALL VERTICAL BEADS.

WE STRONGLY RECOMMEND INSTALLING ACET695 GLASS ADJUSTERS WHEN USING QUICK-GLAZE BEADS. THIS WILL REMOVE THE NEED TO REMOVE BEADS IN ORDER TO ADJUST GLASS POSITION.

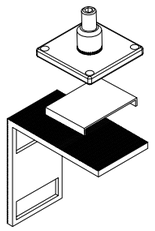

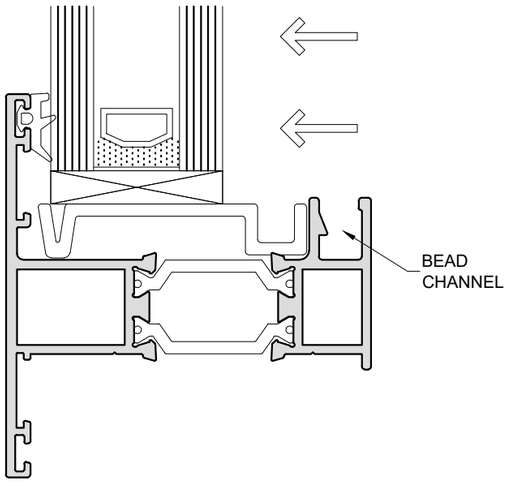

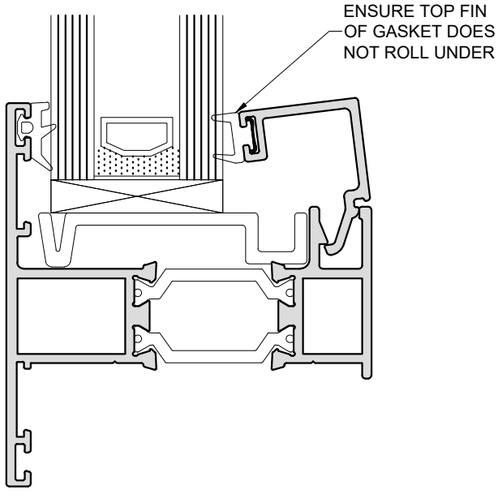

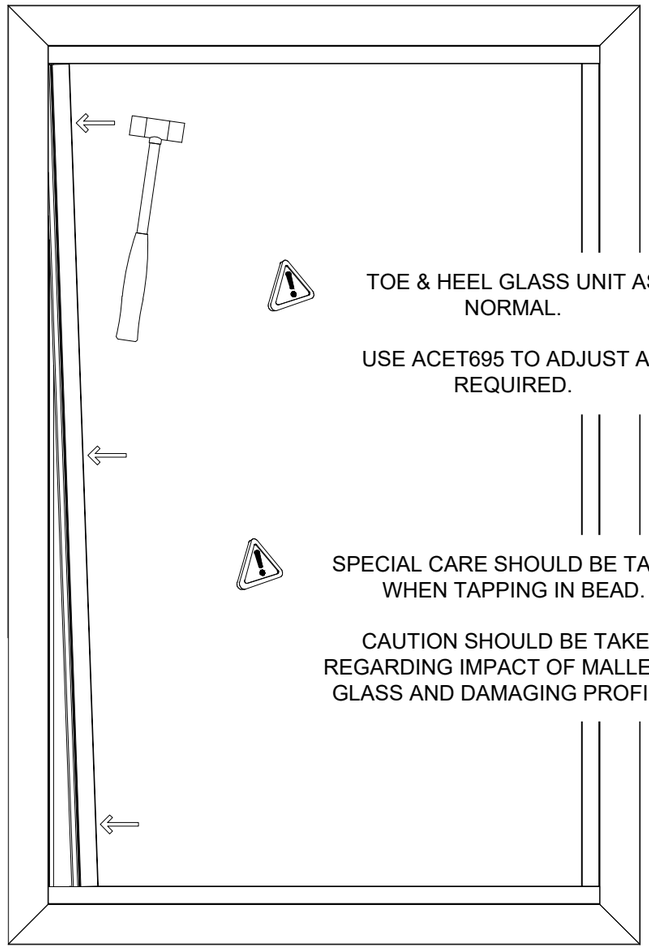

Quick-Glaze Bead Removal

KEEP INTEGRATED GASKET

QUICK-GLAZE BEAD REMOVAL

1. STARTING ON VERTICAL BEADS, APPLY PRESSURE TO BEAD IN DIRECTION SHOWN IN ORDER TO CREATE SMALL GAP BETWEEN SASH AND BEAD.
2. GENTLY INSERT DE-GLAZING TOOL TAKING PARTICULAR CARE AS NOT TO DAMAGE PAINT FINISH.
3. SLOWLY PRISE THE BEAD UP AND AWAY FROM THE SASH.
4. THE BEAD SHOULD NOW BE EASILY REMOVABLE FROM QUICK-GLAZE BEAD CHANNEL IN SASH

BEAD AND INTEGRATED GASKET CAN BE REUSED.

OR

REPLACE INTEGRATED GASKET

QUICK-GLAZE BEAD REMOVAL

1. USING SMALL FLAT HEADED SCREWDRIVER OR SIMILAR, WEDGE TIP BETWEEN CO EXTRUDED GASKET AND ALUMINIUM.
2. IN A LEVERING MOTION, PRISE THE GASKET AWAY FROM THE ALUMINIUM. PARTICULAR CARE SHOULD BE TAKEN NOT TO DAMAGE THE GLASS UNIT AND ALUMINIUM.
3. COMPLETE THIS AT SEVERAL LOCATIONS ALONG THE LENGTH OF THE BEAD.
4. REMOVE GASKET AND DISCARD. THIS GASKET CAN NO LONGER BE USED.
5. THE BEAD SHOULD NOW BE EASILY REMOVABLE FROM TAP IN BEAD CHANNEL IN SASH

PLEASE SEE GLAZING CHART FOR REPLACEMENT GASKET CODES.

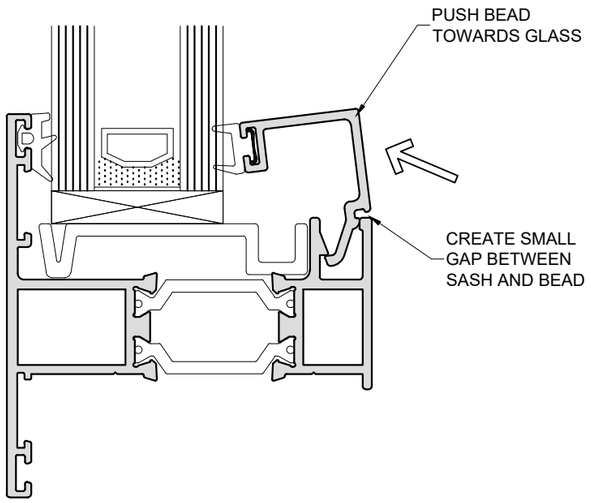

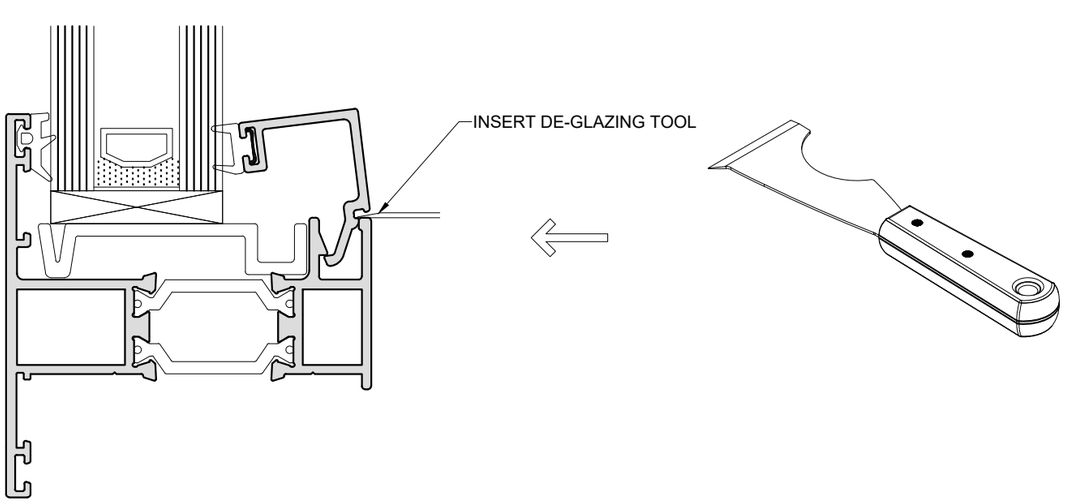

Quick-Glaze Bead Glass Adjuster

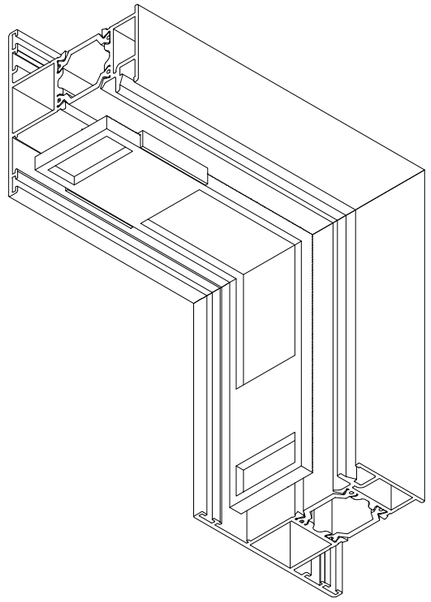

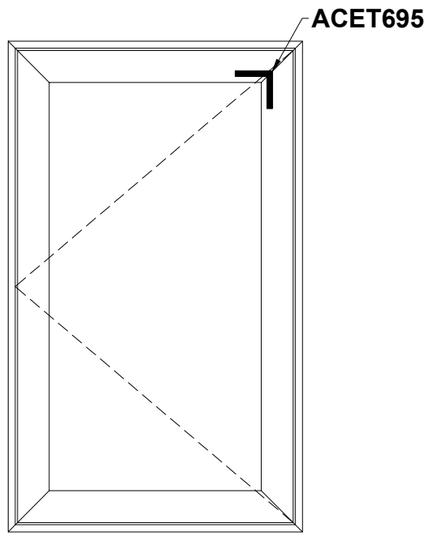

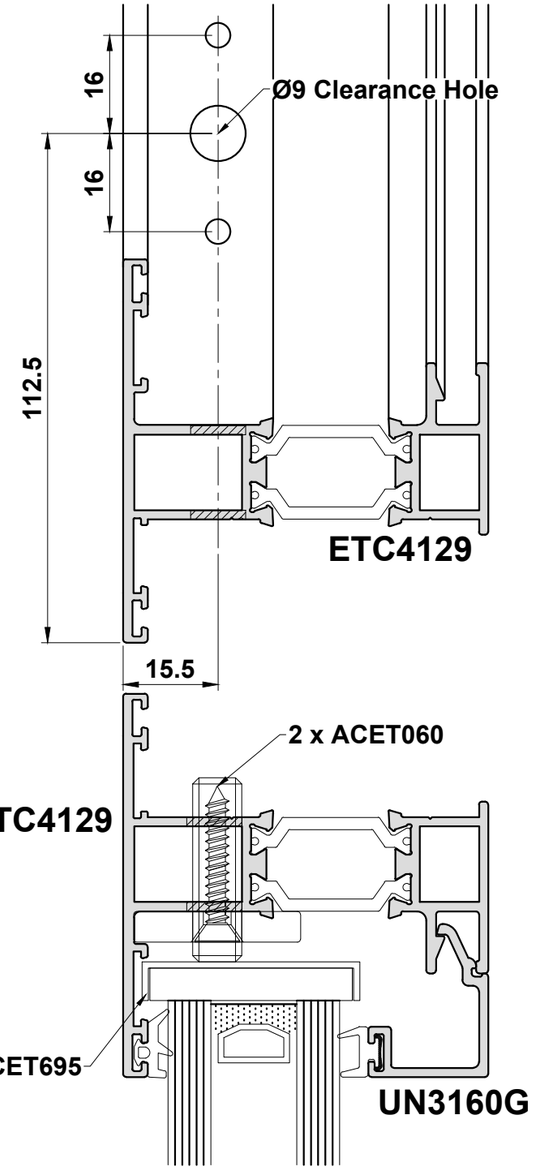

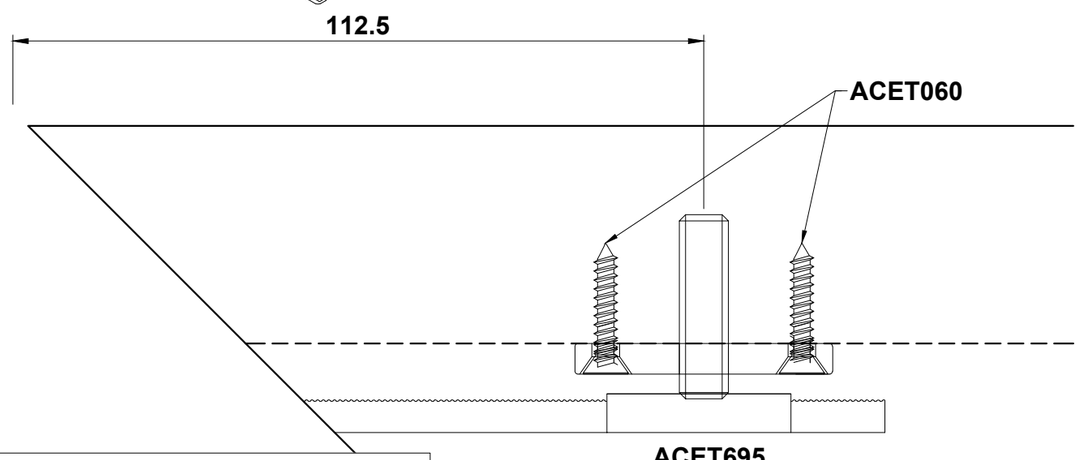

WE STRONGLY RECOMMEND INSTALLING ACET695 GLASS ADJUSTERS WHEN USING QUICK-GLAZE BEADS. THIS WILL REMOVE THE NEED TO REMOVE BEADS IN ORDER TO ADJUST GLASS POSITION.

ACET695 Kit Includes:

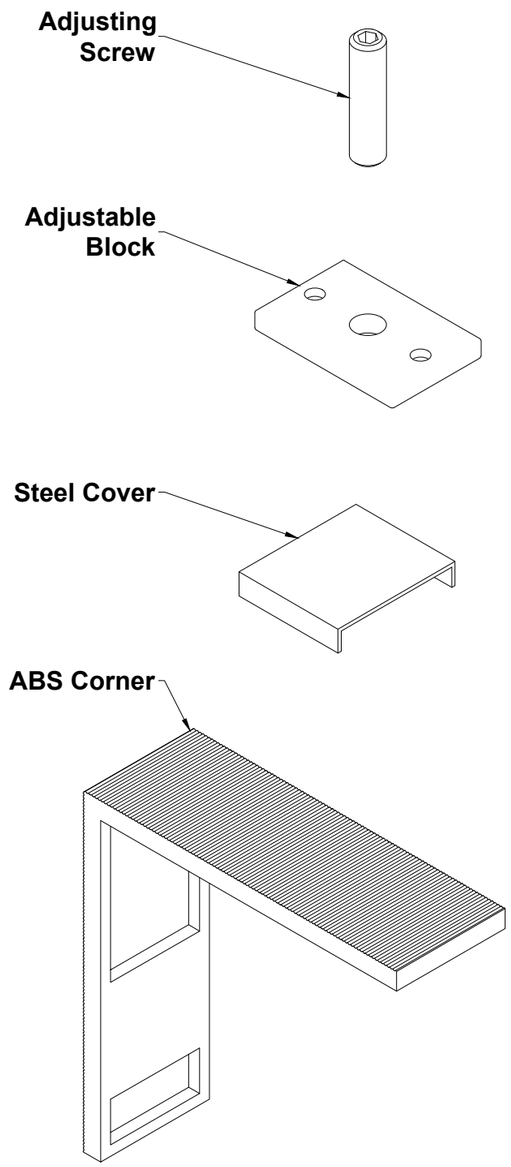

Fixed Bay Pole Angle / Deduction

Sections

ETC4110
ETC4111
ETC4112
ETC4115

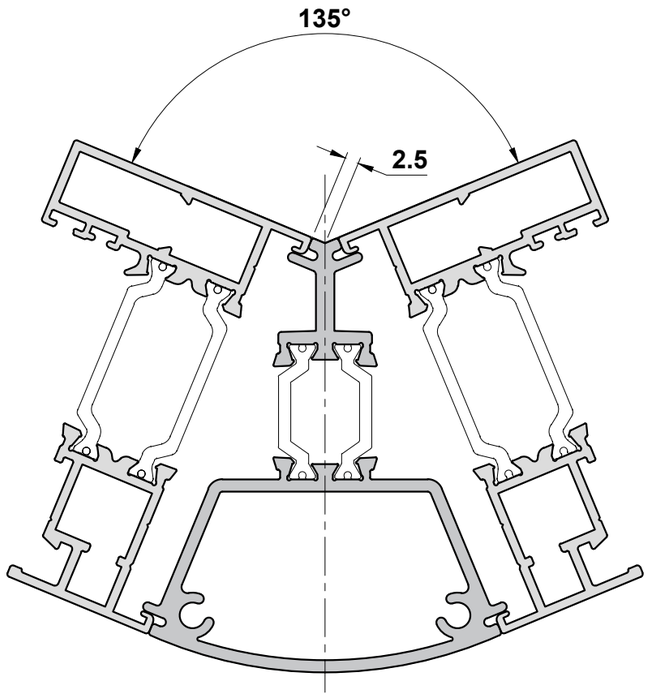

UN3011

Sections

ETC4110
ETC4111
ETC4112
ETC4115

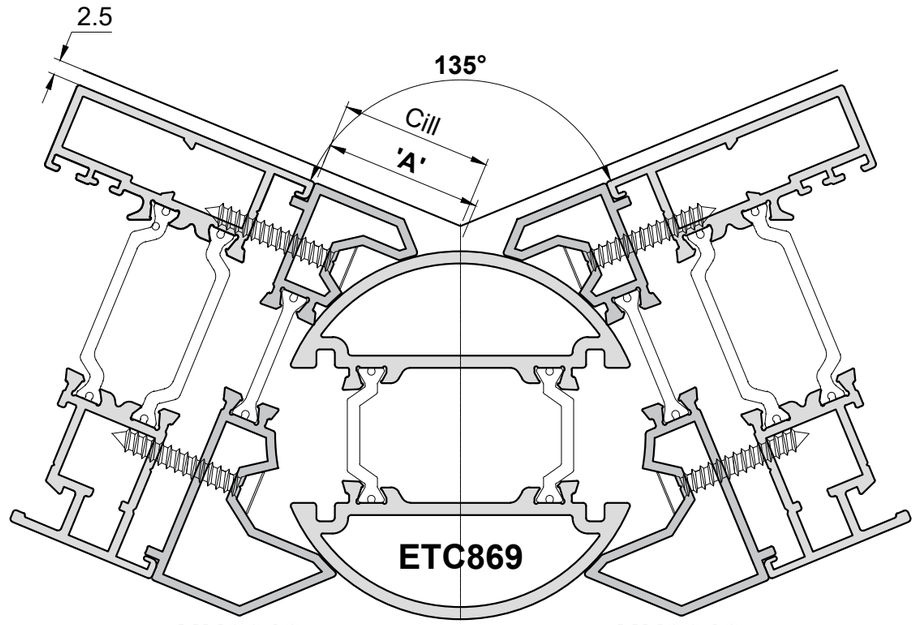

UN3012 **UN3012**

Important Note:
All joints must be adequately sealed using ACSIL04

ANGLE	DEDUCTION 'A'	INT. CILL DEDUCTION
180°	37.5	37.5
175°	36	36
170°	35	35
165°	33.5	33.5
160°	32.5	32
155°	31	30.5
150°	30	29
145°	28.5	27.5
140°	27	26
135°	25.5	24.5

'A' & Cill deductions are the same at angles 180°-165°

70mm Outer Frame Bay Pole Angles/Deductions

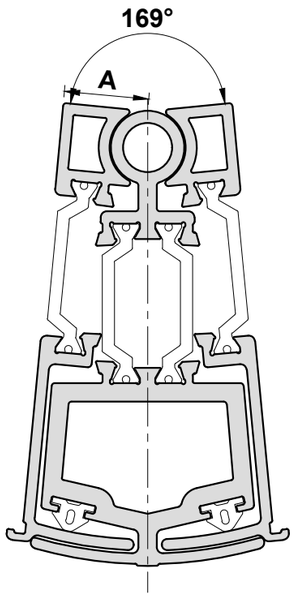

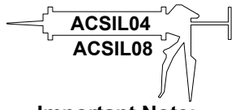

Important Note:
All joints must be adequately sealed using ACSIL04

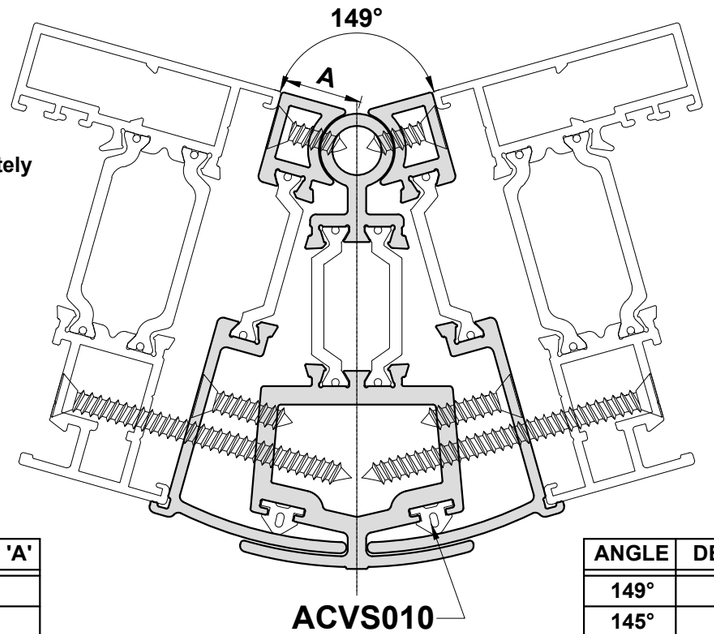

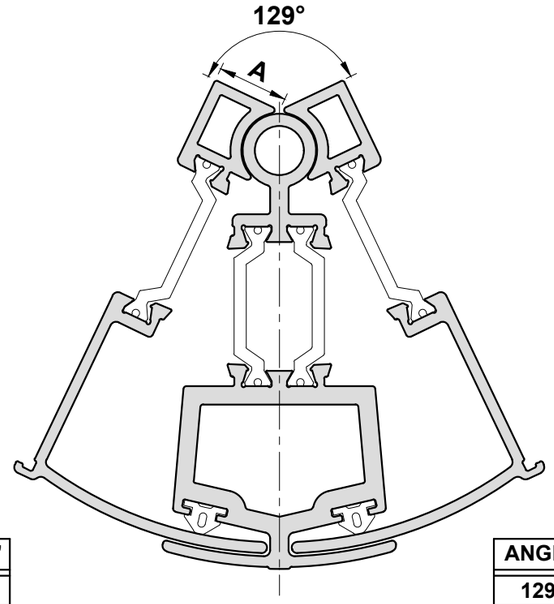

ANGLE	DEDUCTION 'A'
169°	14
165°	13.5
160°	13.6
155°	13
150°	13

ANGLE	DEDUCTION 'A'
149°	12.5
145°	12.5
140°	12
135°	12
130°	11.5

ANGLE	DEDUCTION 'A'
129°	11.5
125°	11.5
120°	11
115°	10.5

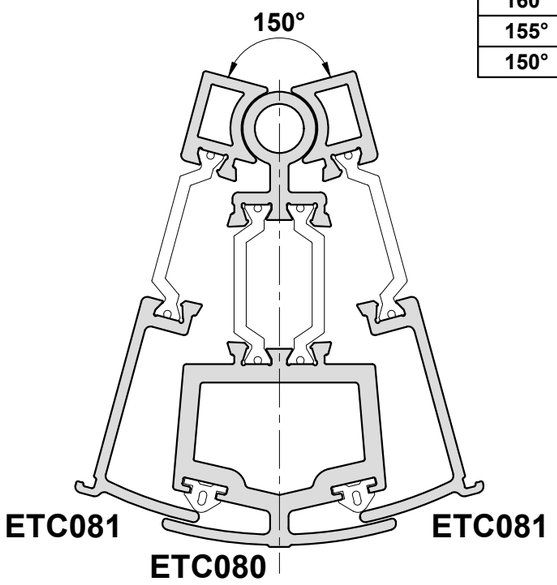

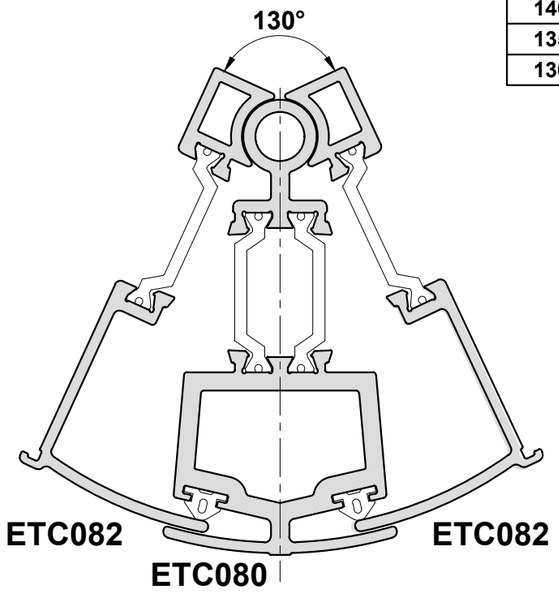

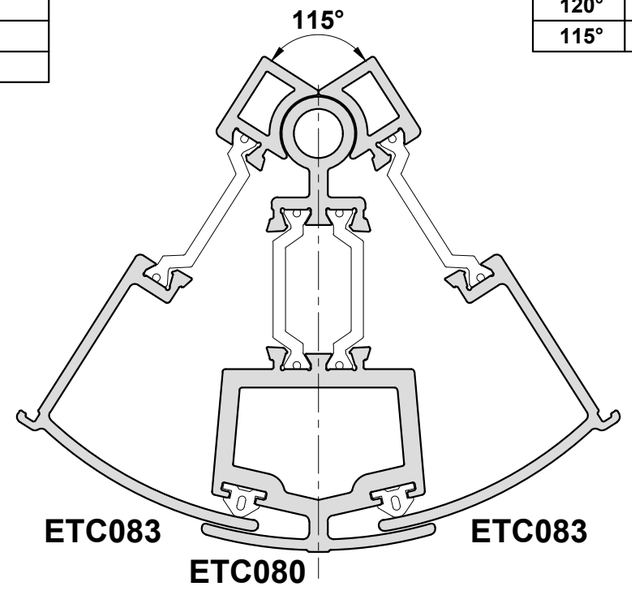

90° Jackable Bay Pole

Note: Installation to comply with relevant building regulations and British standards :-

- **BS8213-4 Code of Practice for the survey and installation of window and external doorsets.**
- **Approved document A structure.**
- **Approved document C resistance to the passage of moisture.**

Height (mm)	Load Bearing
1000	Capped at 2 Tonnes
1250	1.5 Tonnes
1500	1.1 Tonnes
1750	0.8 Tonnes
2000	0.6 Tonnes
2250	0.5 Tonnes
2500	0.4 Tonnes

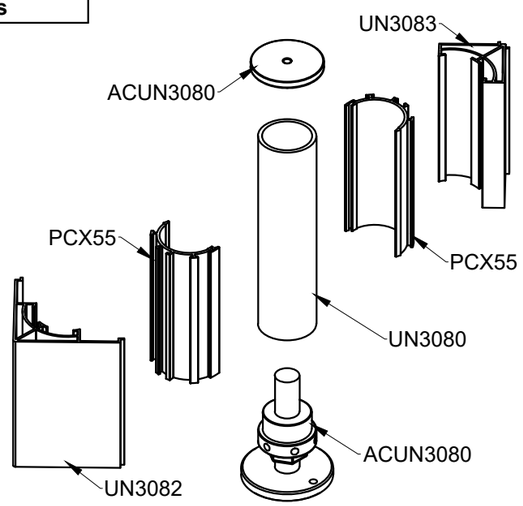

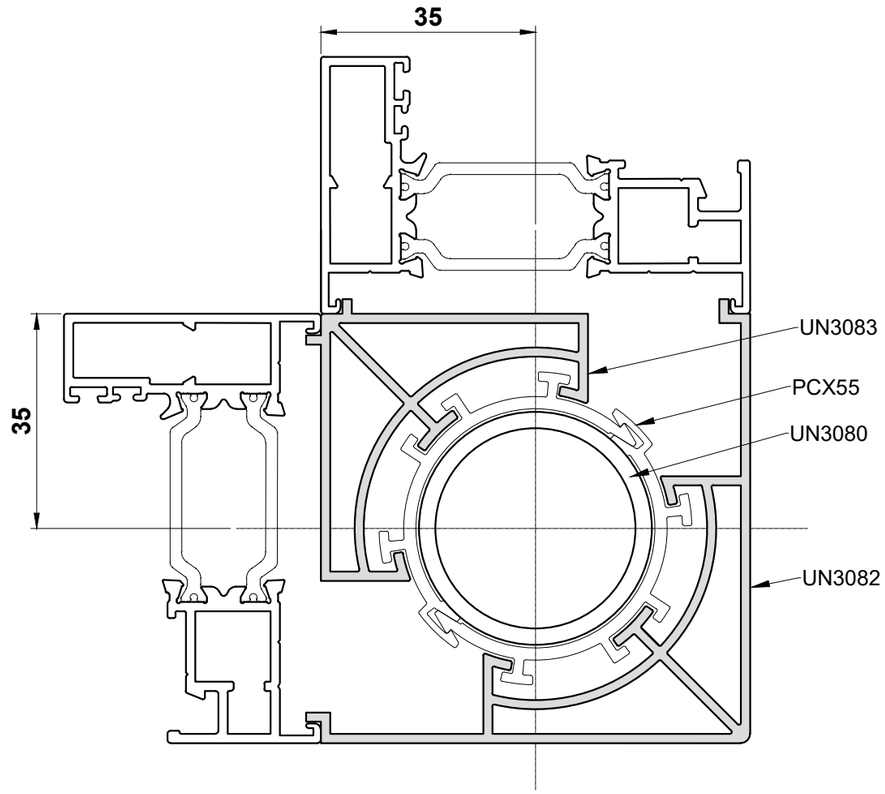

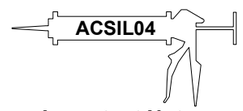

Important Note:
All joints must be adequately sealed using ACSIL04

90° Jackable Bay Pole

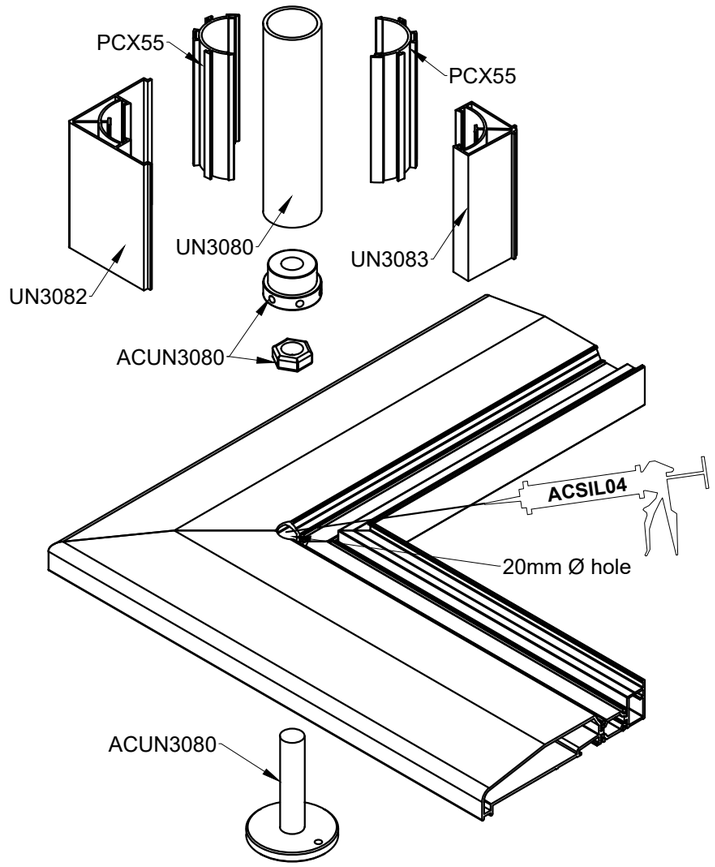

Note: Installation to comply with relevant building regulations and British standards :-

- **BS8213-4 Code of Practice for the survey and installation of window and external doorsets.**
- **Approved document A structure.**
- **Approved document C resistance to the passage of moisture.**

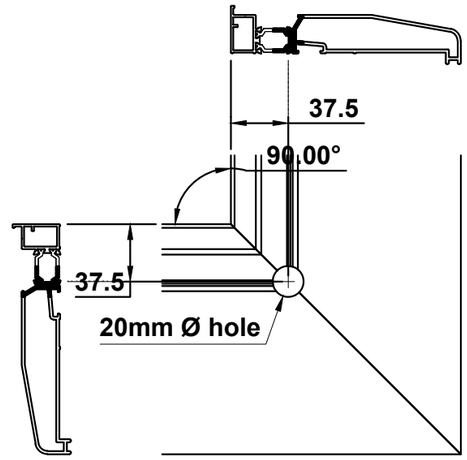

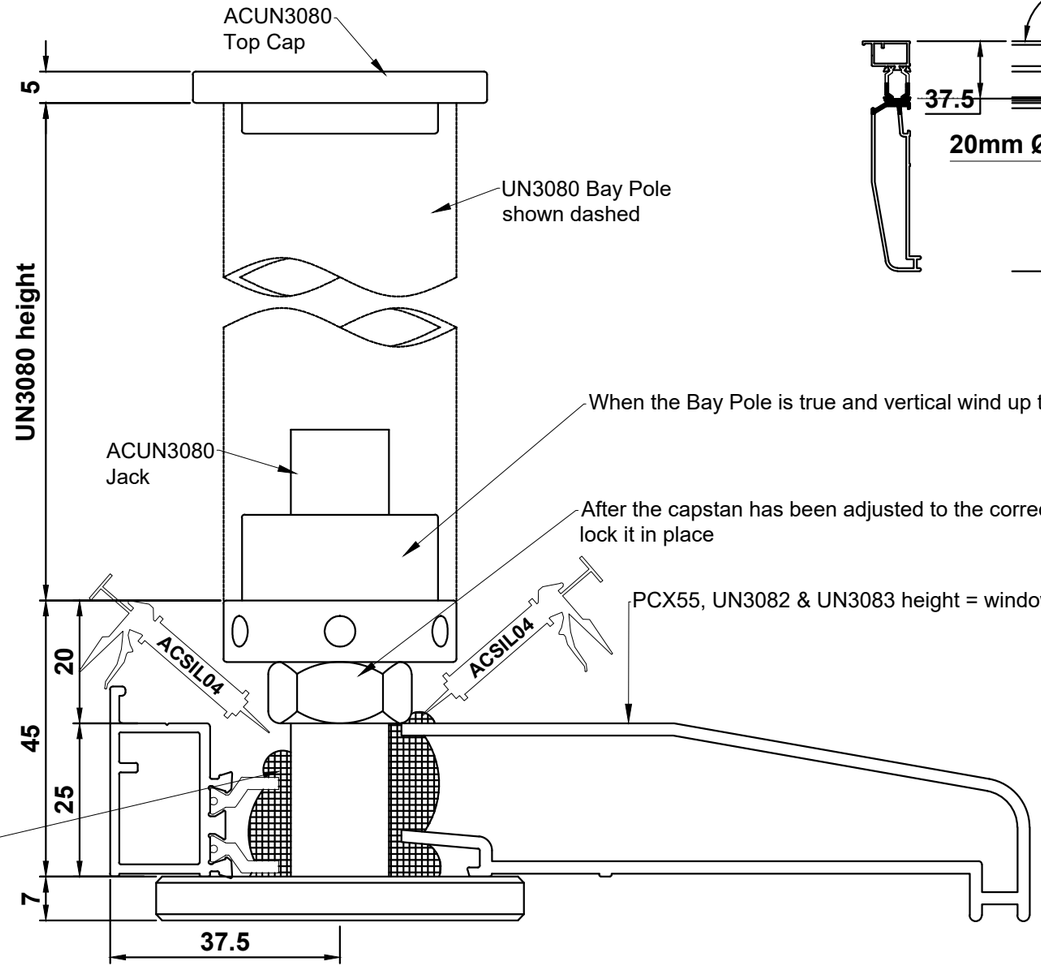

Important Note:
All joints must be adequately sealed using ACSIL04

When the cill does not form a complete water barrier then damp proof course should be used.
See approved document C section 5.9

Remove old mortar under the jack so that the 60mm base rests on a sound and level surface. When required use spreader plate under the jack and above the top cap.

Variable Angle Jackable Bay Pole

Note: Installation to comply with relevant building regulations and British standards :-

- **BS8213-4 Code of Practice for the survey and installation of window and external doorsets.**
- **Approved document A structure.**
- **Approved document C resistance to the passage of moisture.**

Height (mm)	Load Bearing
1000	Capped at 2 Tonnes
1250	1.5 Tonnes
1500	1.1 Tonnes
1750	0.8 Tonnes
2000	0.6 Tonnes
2250	0.5 Tonnes
2500	0.4 Tonnes

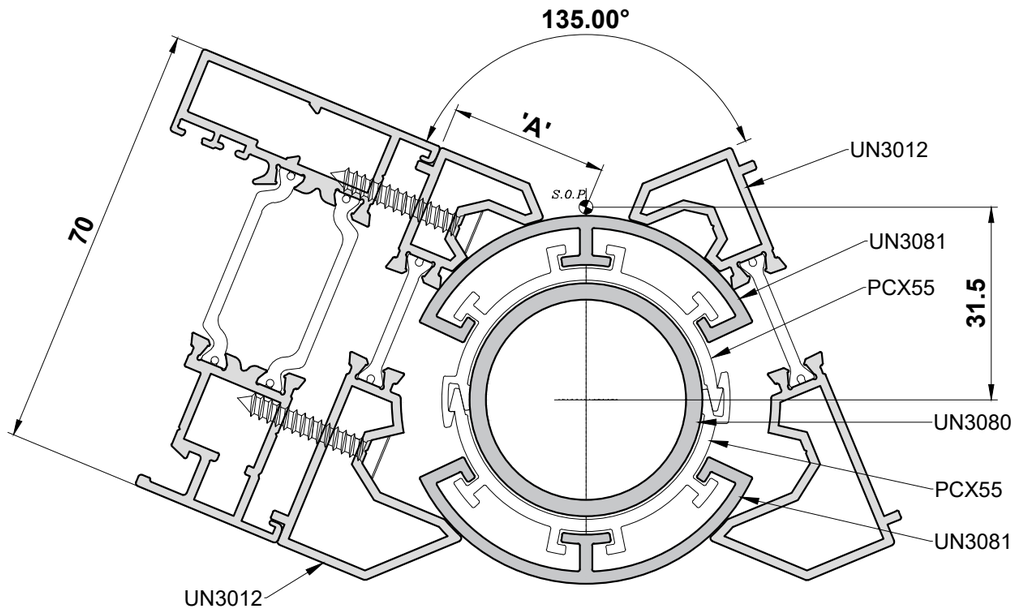

Important Note:
All joints must be adequately sealed using ACSIL04

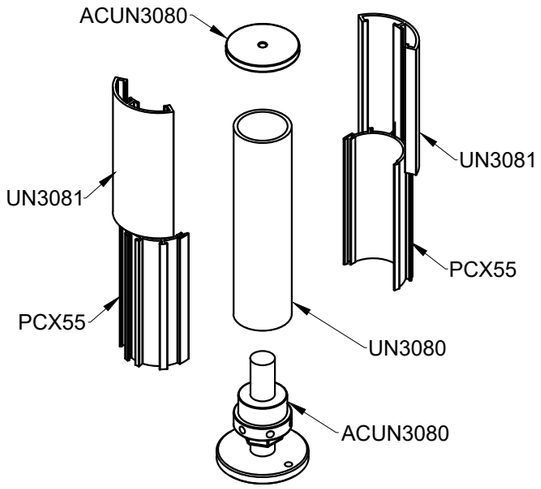

ANGLE	DEDUCTION 'A'
180°	37.5
175°	36
170°	35
165°	33.5
160°	32.5
155°	31
150°	30
145°	28.5
140°	27
135°	25.5
130°	24
125°	23
120°	21
115°	19.5
110°	18

Variable Angle Jackable Bay Pole

Note: Installation to comply with relevant building regulations and British standards :-

- **BS8213-4 Code of Practice for the survey and installation of window and external doorsets.**
- **Approved document A structure.**
- **Approved document C resistance to the passage of moisture.**

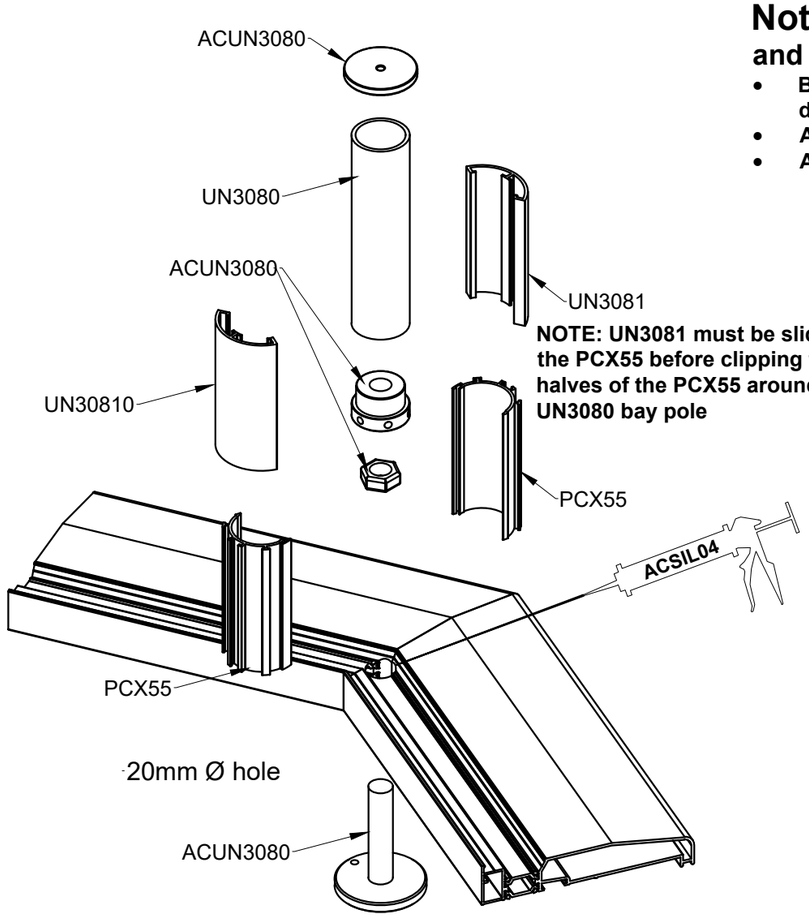

NOTE: UN3081 must be slid into the PCX55 before clipping the two halves of the PCX55 around the UN3080 bay pole

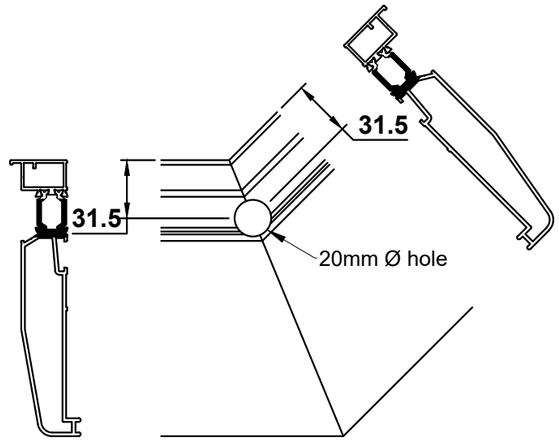

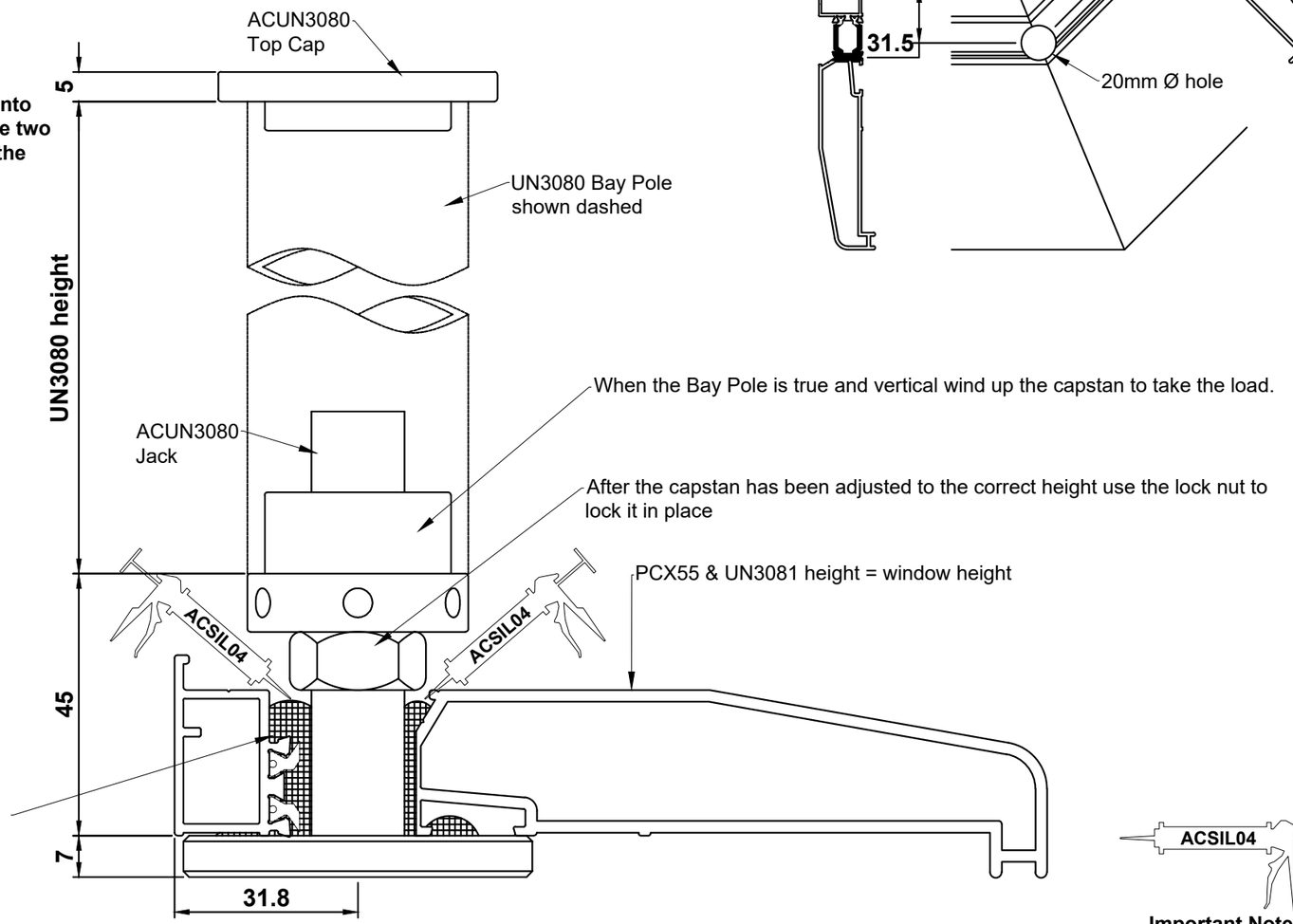

Fully seal between the jack and sub cill with ACSIL04 so that water is not able to track through the 20mm hole.

When the cill does not form a complete water barrier then damp proof course should be used.
See approved document C section 5.9

Remove old mortar under the jack so that the 60mm base rests on a sound and level surface. When required use spreader plate under the jack and above the top cap.

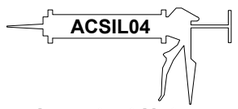

Important Note:
All joints must be adequately sealed using ACSIL04

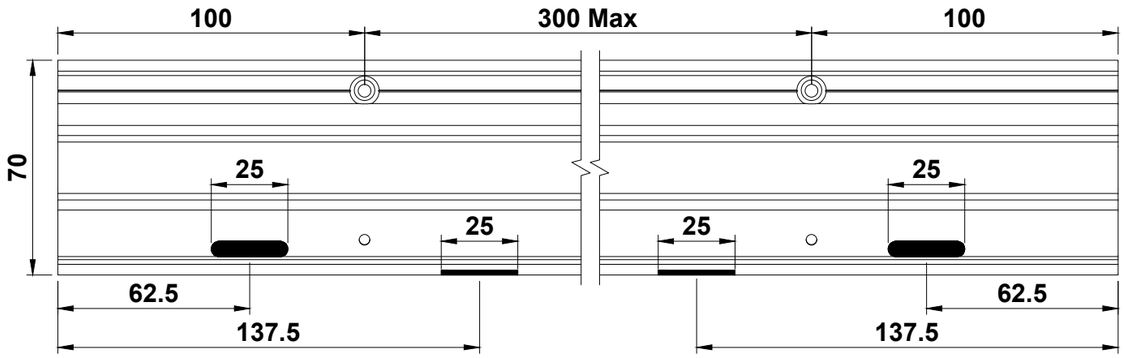

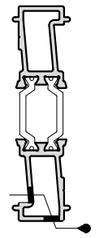

UN3000

Important Note: Seal all joints to UN3000 using ACSIL04.

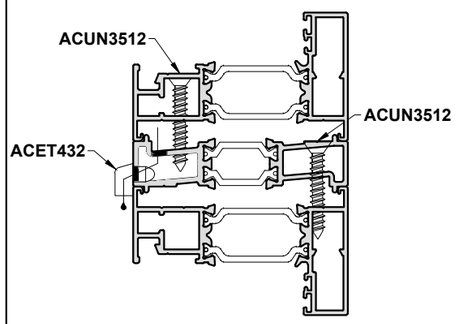

ETC4110

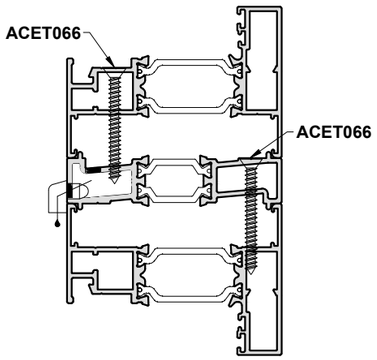

ETC4111
ETC4116

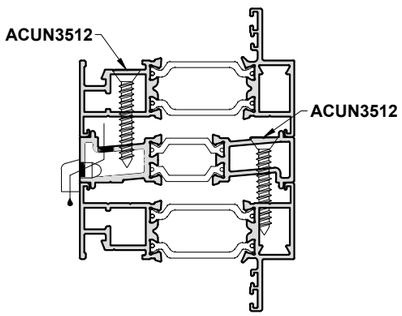

ETC4112

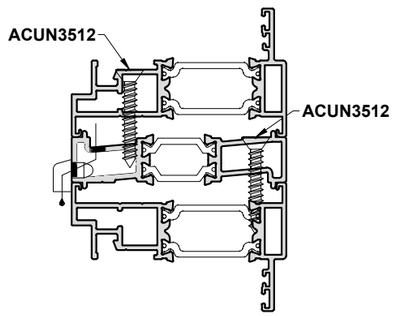

ETC4115

Important Note: Do not screw through drainage channel.

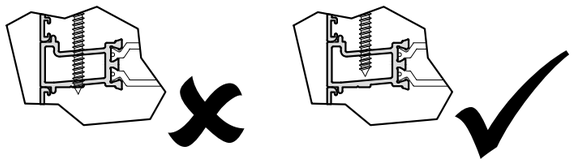

Zone Drainage of Jamb Cavity

CWCT Built up wall guidance recommends drainage of Jamb Cavity

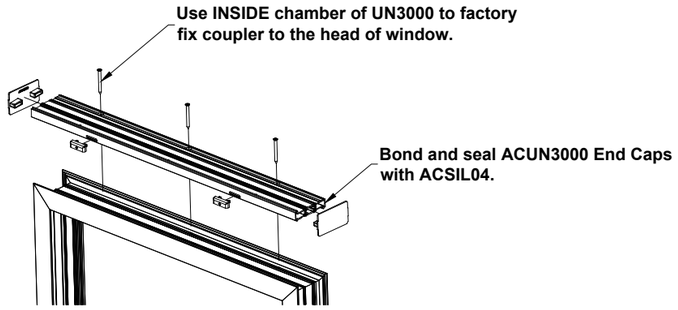

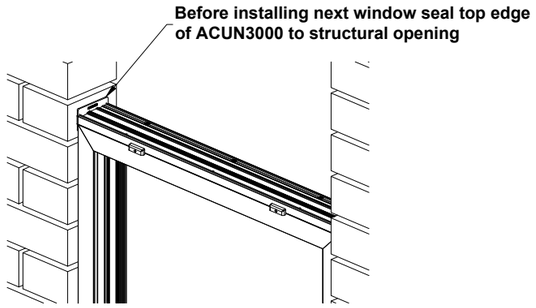

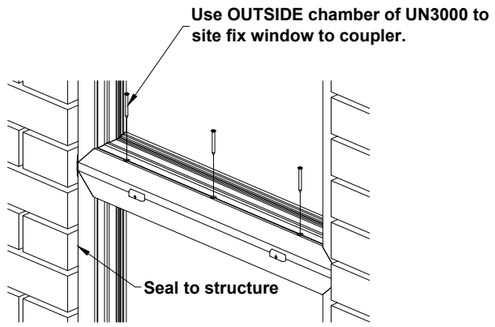

Fixing Strap Details

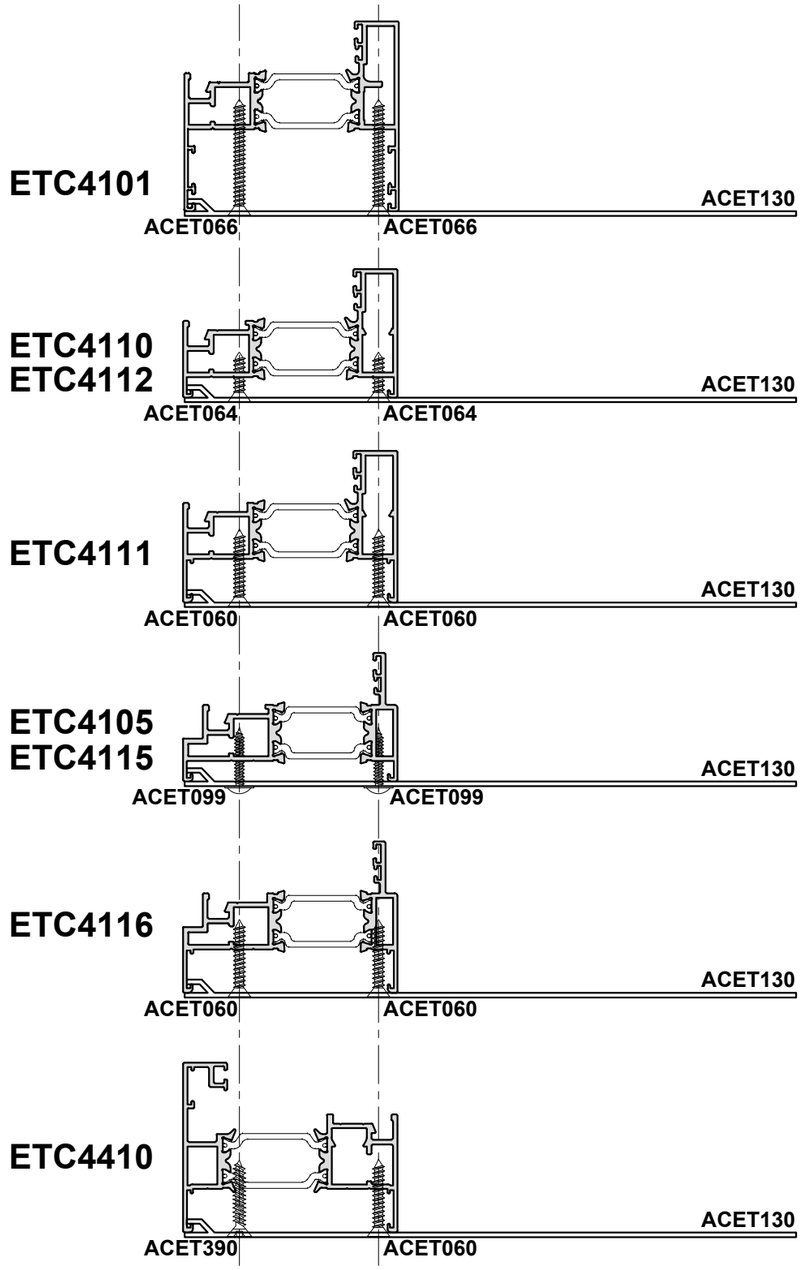

NOTE:

Fixing straps should be spaced a minimum of 150mm in from each end & at a maximum of 300mm apart.

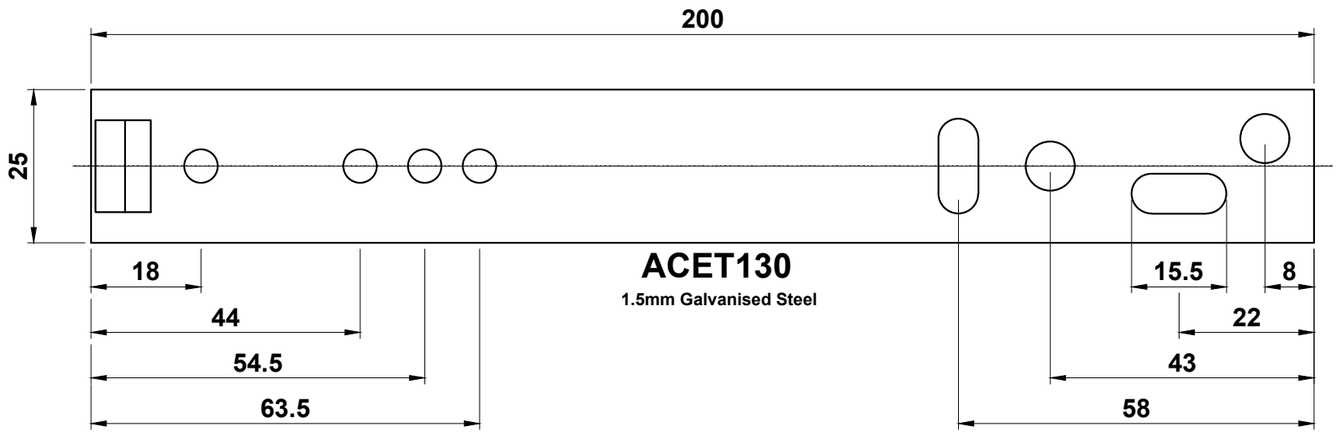

UN3570 & UN3577

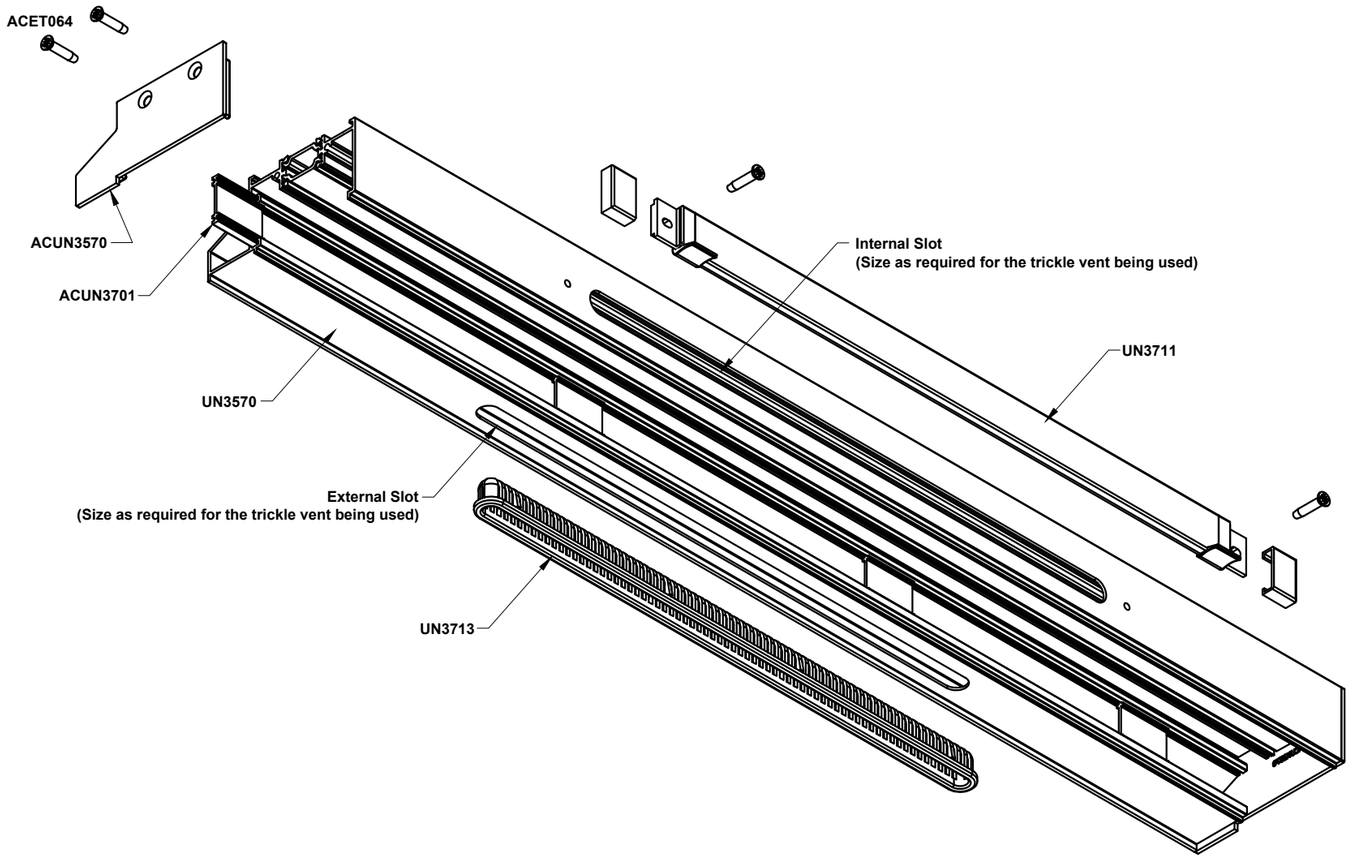

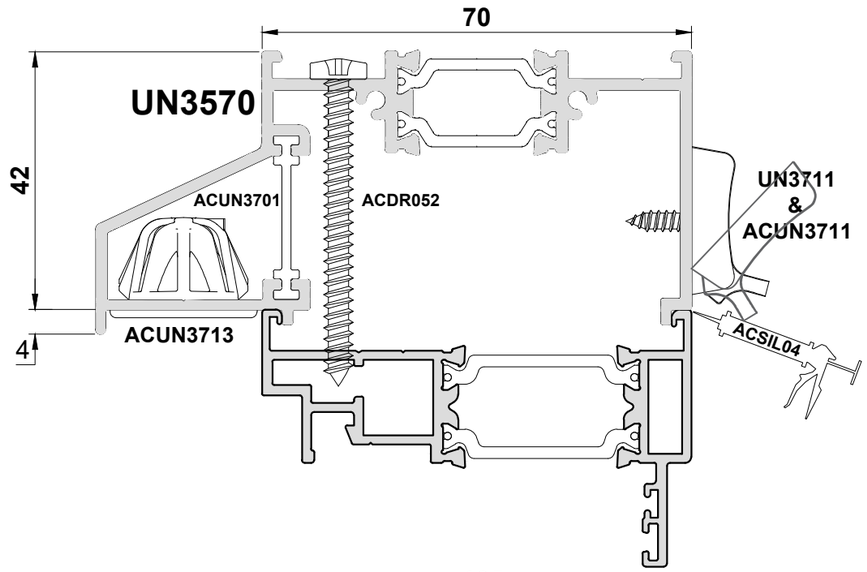

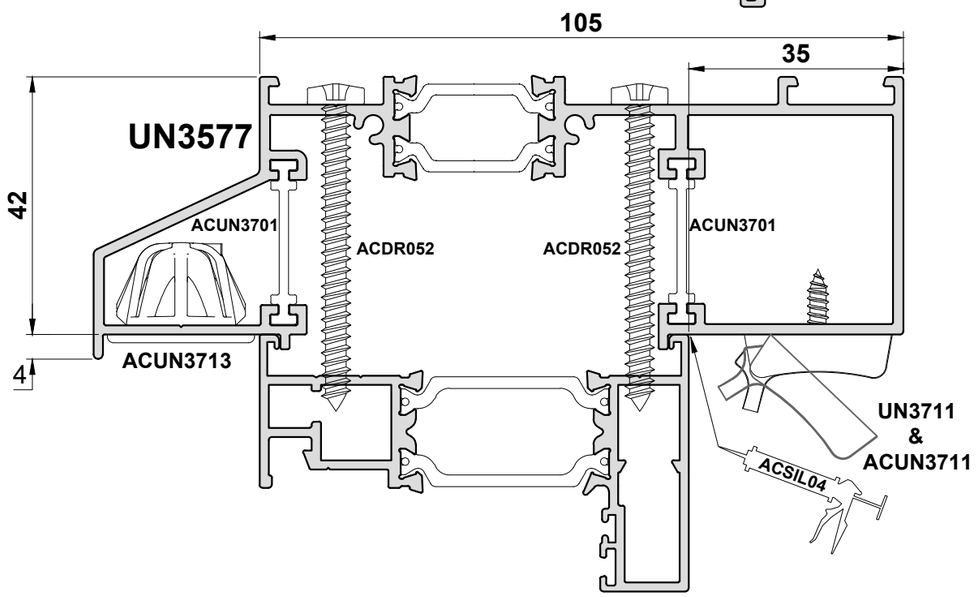

UN3711 with Push in Flyscreen
Equivalent area as per BS 13141-1:2019 = 3026mm²
Length = 400mm
Internal Slot Size = 340mm X 13mm
External Slot Size = 235mm X 16mm

UN3711 with Push in Flyscreen
Equivalent area as per BS 13141-1:2019 = 6132mm²
Length = 600mm
Internal Slot Size = 2 X (275mm X 13mm) + (10mm land)
External Slot Size = 2 X (235mm X 16mm) + (10mm land)

Section F

Section F

Cutting Information

PART DESCRIPTIONS	TYPICAL STYLES	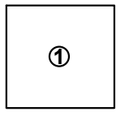	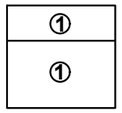	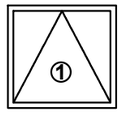	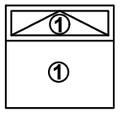		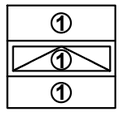	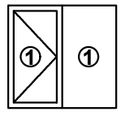	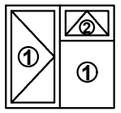	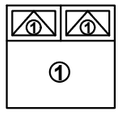	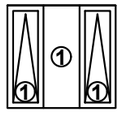			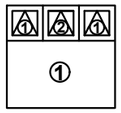	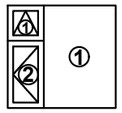	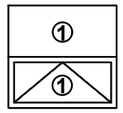
Outer Frame	Head & Cill	W	W	W	W	W	W	W	W	W	W	W	W	W	W	W
	Jambs	H	H	H	H	H	H	H	H	H	H	H	H	H	H	H
	Transoms		W - 50		W - 50	W - 50	W - 50		OF to ℄M - 36.5	W - 50		OF to ℄M - 36.5	℄M to ℄M - 23	W - 50	OF to ℄M - 36.5	W - 50
	Mullions							H - 50	H - 50	OF to ℄T - 36.5	H - 50	H - 50	H - 50	OF to ℄T - 36.5	H - 50	
Vent (1)	Horizontal Members			W - 38	W - 38	W - 38	W - 38	OF to ℄M - 24.5	OF to ℄M - 24.5	OF to ℄M - 24.5	OF to ℄M - 24.5	OF to ℄M - 24.5	OF to ℄M - 24.5	OF to ℄M - 24.5	OF to ℄M - 24.5	W - 38
	Vertical Members			H - 38	OF to ℄T - 24.5	OF to ℄T - 24.5	℄T to ℄T - 11	H - 38	H - 38	OF to ℄T - 24.5	H - 38	OF to ℄T - 24.5	H - 38	OF to ℄T - 24.5	OF to ℄T - 24.5	OF to ℄T - 24.5
	Glass Width			W - 138	W - 138	W - 138	W - 138	OF to ℄M - 124.5	OF to ℄M - 124.5	OF to ℄M - 124.5	OF to ℄M - 124.5	OF to ℄M - 124.5	OF to ℄M - 124.5	OF to ℄M - 124.5	OF to ℄M - 124.5	W - 138
	Glass Height			W - 138	OF to ℄T - 124.5	OF to ℄T - 124.5	℄T to ℄T - 111	H - 138	H - 138	OF to ℄T - 124.5	H - 138	OF to ℄T - 124.5	H - 138	OF to ℄T - 124.5	OF to ℄T - 124.5	OF to ℄T - 124.5
Vent (2)	Horizontal Members					W - 38			OF to ℄M - 24.5			OF to ℄M - 24.5	℄M to ℄M - 11	℄M to ℄M - 11	OF to ℄M - 24.5	
	Vertical Members					OF to ℄T - 24.5			OF to ℄T - 24.5			OF to ℄T - 24.5	OF to ℄T - 24.5	OF to ℄T - 24.5	OF to ℄T - 24.5	
	Glass Width					W-138			OF to ℄M - 124.5			OF to ℄M - 124.5	℄M to ℄M - 111	℄M to ℄M - 111	OF to ℄M - 124.5	
	Glass Height					OF to ℄T - 124.5			OF to ℄T - 124.5			OF to ℄T - 124.5	OF to ℄T - 124.5	OF to ℄T - 124.5	OF to ℄T - 124.5	
Fixed Pane (1)	Glass Width	W - 60	W - 60		W - 60		W - 60	OF to ℄M - 46.5	OF to ℄M - 46.5	W - 60	℄M to ℄M - 33	℄M to ℄M - 33	℄M to ℄M - 33	W - 60	OF to ℄M - 46.5	W - 60
	Glass Height	H - 60	OF to ℄T - 46.5		OF to ℄T - 46.5		OF to ℄T - 46.5	H - 60	OF to ℄T - 46.5	OF to ℄T - 46.5	H - 60	H - 60	OF to ℄T - 46.5	OF to ℄T - 46.5	H - 60	OF to ℄T - 46.5

Legend

W	=	Outer Frame Width (Longest Leg)
H	=	Outer Frame Height (Longest Leg)
℄T	=	Centre Line of Transom
℄M	=	Centre Line of Mullion
OF	=	Edge of Outer Frame (Longest Leg)

Sections

Outer Frame:	ETC4110, ETC4112
Sash:	ETC4129
Fixed Light:	Beaded
Transom/Mullion:	ETC4130

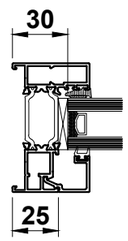

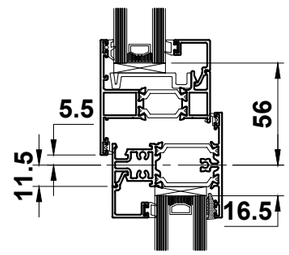

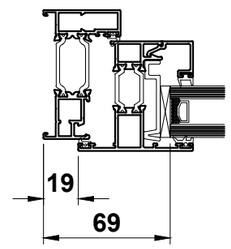

Do Not Scale From This Drawing

Cutting Information

PART DESCRIPTIONS	TYPICAL STYLES	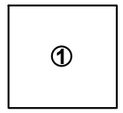	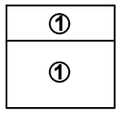	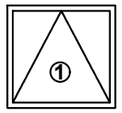	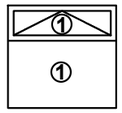	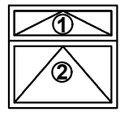	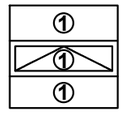	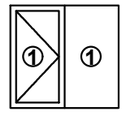	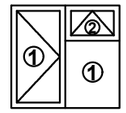	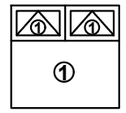	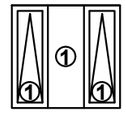	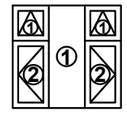	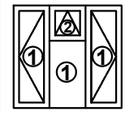	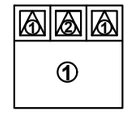	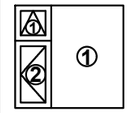	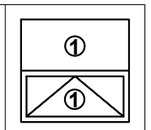
Outer Frame	Head & Cill	W	W	W	W	W	W	W	W	W	W	W	W	W	W	W
	Jambs	H	H	H	H	H	H	H	H	H	H	H	H	H	H	H
	Transoms		W - 50		W - 50	W - 50	W - 50		OF to ℄M - 36.5	W - 50		OF to ℄M - 36.5	℄M to ℄M - 23	W - 50	OF to ℄M - 36.5	W - 50
	Mullions							H - 50	H - 50	OF to ℄T - 36.5	H - 50	H - 50	H - 50	OF to ℄T - 36.5	H - 50	
Vent (1)	Horizontal Members			W - 38	W - 38	W - 38	W - 38	OF to ℄M - 24.5	OF to ℄M - 24.5	OF to ℄M - 24.5	OF to ℄M - 24.5	OF to ℄M - 24.5	OF to ℄M - 24.5	OF to ℄M - 24.5	OF to ℄M - 24.5	W - 38
	Vertical Members			H - 38	OF to ℄T - 24.5	OF to ℄T - 24.5	℄T to ℄T - 11	H - 38	H - 38	OF to ℄T - 24.5	H - 38	OF to ℄T - 24.5	H - 38	OF to ℄T - 24.5	OF to ℄T - 24.5	OF to ℄T - 24.5
	Glass Width			W - 118	W - 118	W - 118	W - 118	OF to ℄M - 104.5	OF to ℄M - 104.5	OF to ℄M - 104.5	OF to ℄M - 104.5	OF to ℄M - 104.5	OF to ℄M - 104.5	OF to ℄M - 104.5	OF to ℄M - 104.5	W - 118
	Glass Height			H - 118	OF to ℄T - 104.5	OF to ℄T - 104.5	OF to ℄T - 104.5	H - 118	H - 118	OF to ℄T - 104.5	H - 118	OF to ℄T - 104.5	H - 118	OF to ℄T - 104.5	OF to ℄T - 104.5	OF to ℄T - 104.5
Vent (2)	Horizontal Members					W - 38			OF to ℄M - 24.5			OF to ℄M - 24.5	℄M to ℄M - 11	℄M to ℄M - 11	OF to ℄M - 24.5	
	Vertical Members					OF to ℄T - 24.5			OF to ℄T - 24.5			OF to ℄T - 24.5	OF to ℄T - 24.5	OF to ℄T - 24.5	OF to ℄T - 24.5	
	Glass Width					OF to ℄M - 104.5			OF to ℄M - 104.5			OF to ℄M - 104.5	℄M to ℄M - 91	℄M to ℄M - 91	OF to ℄M - 104.5	
	Glass Height					OF to ℄T - 104.5			OF to ℄T - 104.5			OF to ℄T - 104.5	OF to ℄T - 104.5	OF to ℄T - 104.5	OF to ℄T - 104.5	
Fixed Pane (1)	Glass Width	W - 60	W - 60		W - 60		W - 60	OF to ℄M - 46.5	OF to ℄M - 46.5	W - 60	℄M to ℄M - 33	℄M to ℄M - 33	℄M to ℄M - 33	W - 60	OF to ℄M - 46.5	W - 60
	Glass Height	H - 60	OF to ℄T - 46.5		OF to ℄T - 46.5		OF to ℄T - 46.5	H - 60	OF to ℄T - 46.5	OF to ℄T - 46.5	H - 60	H - 60	OF to ℄T - 46.5	OF to ℄T - 46.5	H - 60	OF to ℄T - 46.5

Legend

W	=	Outer Frame Width (Longest Leg)
H	=	Outer Frame Height (Longest Leg)
℄T	=	Centre Line of Transom
℄M	=	Centre Line of Mullion
OF	=	Edge of Outer Frame (Longest Leg)

Sections

Outer Frame:	ETC4110, ETC4112
Sash:	ETC4120
Fixed Light:	Beaded
Transom/Mullion:	ETC4130

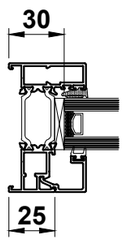

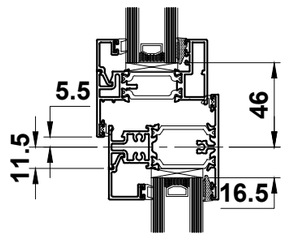

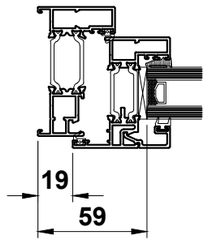

Do Not Scale From This Drawing

Cutting Information

PART DESCRIPTIONS	TYPICAL STYLES	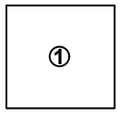	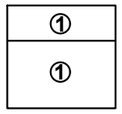		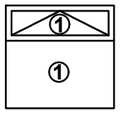	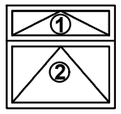	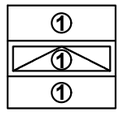	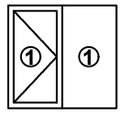	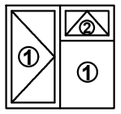	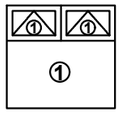	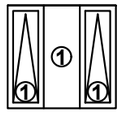			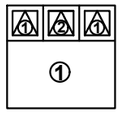	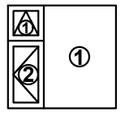	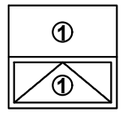
Outer Frame	Head & Cill	W	W	W	W	W	W	W	W	W	W	W	W	W	W	W
	Jambs	H	H	H	H	H	H	H	H	H	H	H	H	H	H	H
	Transoms		W - 50		W - 50	W - 50	W - 50		OF to ℄M - 36.5	W - 50		OF to ℄M - 36.5	℄M to ℄M - 23	W - 50	OF to ℄M - 36.5	W - 50
	Mullions							H - 50	H - 50	OF to ℄T - 36.5	H - 50	H - 50	H - 50	OF to ℄T - 36.5	H - 50	
Vent (1)	Horizontal Members			W - 38	W - 38	W - 38	W - 38	OF to ℄M - 24.5	OF to ℄M - 24.5	OF to ℄M - 24.5	OF to ℄M - 24.5	OF to ℄M - 24.5	OF to ℄M - 24.5	OF to ℄M - 24.5	OF to ℄M - 24.5	W - 38
	Vertical Members			H - 38	OF to ℄T - 24.5	OF to ℄T - 24.5	℄T to ℄T - 11	H - 38	H - 38	OF to ℄T - 24.5	H - 38	OF to ℄T - 24.5	H - 38	OF to ℄T - 24.5	OF to ℄T - 24.5	OF to ℄T - 24.5
	Glass Width			W - 138	W - 138	W - 138	W - 138	OF to ℄M - 124.5	OF to ℄M - 124.5	OF to ℄M - 124.5	OF to ℄M - 124.5	OF to ℄M - 124.5	OF to ℄M - 124.5	OF to ℄M - 124.5	OF to ℄M - 124.5	W - 138
	Glass Height			W - 138	OF to ℄T - 124.5	OF to ℄T - 124.5	OF to ℄T - 124.5	H - 138	H - 138	OF to ℄T - 124.5	H - 138	OF to ℄T - 124.5	H - 138	OF to ℄T - 124.5	OF to ℄T - 124.5	OF to ℄T - 124.5
Vent (2)	Horizontal Members					W - 38			OF to ℄M - 24.5			OF to ℄M - 24.5	℄M to ℄M - 11	℄M to ℄M - 11	OF to ℄M - 24.5	
	Vertical Members					OF to ℄T - 24.5			OF to ℄T - 24.5			OF to ℄T - 24.5	OF to ℄T - 24.5	OF to ℄T - 24.5	OF to ℄T - 24.5	
	Glass Width					W - 138			OF to ℄M - 124.5			OF to ℄M - 124.5	℄M to ℄M - 111	℄M to ℄M - 111	OF to ℄M - 124.5	
	Glass Height					OF to ℄T - 124.5			OF to ℄T - 124.5			OF to ℄T - 124.5	OF to ℄T - 124.5	OF to ℄T - 124.5	OF to ℄T - 124.5	
Fixed Pane (1)	Horizontal Members	W - 38	W - 38		W - 38		W - 38	OF to ℄M - 24.5	OF to ℄M - 24.5	W - 38	℄M to ℄M - 11	℄M to ℄M - 11	℄M to ℄M - 11	W - 38	℄M to ℄M - 24.5	W - 38
	Vertical Members	H - 38	OF to ℄T - 24.5		OF to ℄T - 24.5		OF to ℄T - 24.5	H - 38	OF to ℄T - 24.5	OF to ℄T - 24.5	H - 38	H - 38	OF to ℄T - 24.5	OF to ℄T - 24.5	H - 38	OF to ℄T - 24.5
	Glass Width	W - 95	W - 95		W - 95		W - 95	OF to ℄M - 81.5	OF to ℄M - 81.5	W - 95	℄M to ℄M - 68	℄M to ℄M - 68	℄M to ℄M - 68	W - 95	OF to ℄M - 81.5	W - 95
	Glass Height	H - 95	OF to ℄T - 81.5		OF to ℄T - 81.5		OF to ℄T - 81.5	H - 95	OF to ℄T - 81.5	OF to ℄T - 81.5	H - 95	H - 95	OF to ℄T - 81.5	OF to ℄T - 81.5	H - 95	OF to ℄T - 81.5

Legend

W	=	Outer Frame Width (Longest Leg)
H	=	Outer Frame Height (Longest Leg)
℄T	=	Centre Line of Transom
℄M	=	Centre Line of Mullion
OF	=	Edge of Outer Frame (Longest Leg)

Sections

Outer Frame:	ETC4110, ETC4112
Sash:	ETC4129
Fixed Light:	ETC4147
Transom/Mullion:	ETC4130

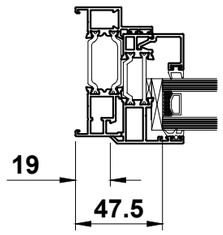

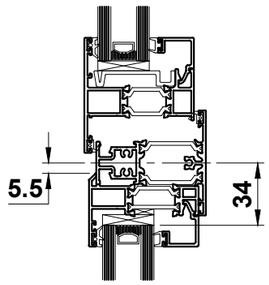

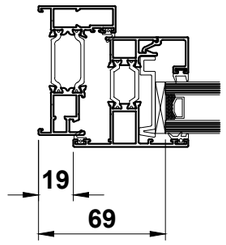

Do Not Scale From This Drawing

Cutting Information

PART DESCRIPTIONS	TYPICAL STYLES	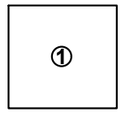	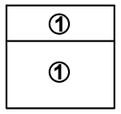		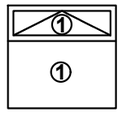	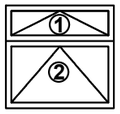	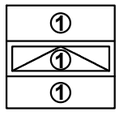	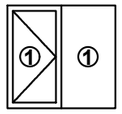	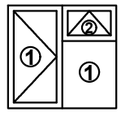	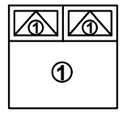	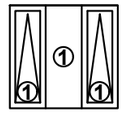		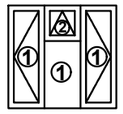	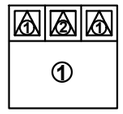	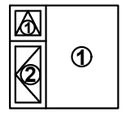	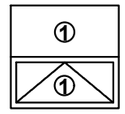
Outer Frame	Head & Cill	W	W	W	W	W	W	W	W	W	W	W	W	W	W	W
	Jambs	H	H	H	H	H	H	H	H	H	H	H	H	H	H	H
	Transoms		W - 50		W - 50	W - 50	W - 50		OF to ℄M - 36.5	W - 50		OF to ℄M - 36.5	℄M to ℄M - 23	W - 50	OF to ℄M - 36.5	W - 50
	Mullions							H - 50	H - 50	OF to ℄T - 36.5	H - 50	H - 50	H - 50	OF to ℄T - 36.5	H - 50	
Vent (1)	Horizontal Members			W - 38	W - 38	W - 38	W - 38	OF to ℄M - 24.5	OF to ℄M - 24.5	OF to ℄M - 24.5	OF to ℄M - 24.5	OF to ℄M - 24.5	OF to ℄M - 24.5	OF to ℄M - 24.5	OF to ℄M - 24.5	W - 38
	Vertical Members			H - 38	OF to ℄T - 24.5	OF to ℄T - 24.5	℄T to ℄T - 11	H - 38	H - 38	OF to ℄T - 24.5	H - 38	OF to ℄T - 24.5	H - 38	OF to ℄T - 24.5	OF to ℄T - 24.5	OF to ℄T - 24.5
	Glass Width			W - 118	W - 118	W - 118	W - 118	OF to ℄M - 104.5	OF to ℄M - 104.5	OF to ℄M - 104.5	OF to ℄M - 104.5	OF to ℄M - 104.5	OF to ℄M - 104.5	OF to ℄M - 104.5	OF to ℄M - 104.5	W - 118
	Glass Height			H - 118	OF to ℄T - 104.5	OF to ℄T - 104.5	℄T to ℄T - 93	H - 118	H - 118	OF to ℄T - 104.5	H - 118	OF to ℄T - 104.5	H - 118	OF to ℄T - 104.5	OF to ℄T - 104.5	OF to ℄T - 104.5
Vent (2)	Horizontal Members					W - 38			OF to ℄M - 24.5			OF to ℄M - 24.5	℄M to ℄M - 11	℄M to ℄M - 11	OF to ℄M - 24.5	
	Vertical Members					OF to ℄T - 24.5			OF to ℄T - 24.5			OF to ℄T - 24.5	OF to ℄T - 24.5	OF to ℄T - 24.5	OF to ℄T - 24.5	
	Glass Width					W - 118			OF to ℄M - 104.5			OF to ℄M - 104.5	℄M to ℄M - 91	℄M to ℄M - 91	℄M to ℄M - 104.5	
	Glass Height					OF to ℄T - 104.5			OF to ℄T - 104.5			OF to ℄T - 104.5	OF to ℄T - 104.5	OF to ℄T - 104.5	OF to ℄T - 104.5	
Fixed Pane (1)	Horizontal Members	W - 38	W - 38		W - 38		W - 38	OF to ℄M - 24.5	OF to ℄M - 24.5	W - 38	℄M to ℄M - 11	℄M to ℄M - 11	℄M to ℄M - 11	W - 38	℄M to ℄M - 24.5	W - 38
	Vertical Members	H - 38	OF to ℄T - 24.5		OF to ℄T - 24.5		OF to ℄T - 24.5	H - 38	OF to ℄T - 24.5	OF to ℄T - 24.5	H - 38	H - 38	OF to ℄T - 24.5	OF to ℄T - 24.5	H - 38	OF to ℄T - 24.5
	Glass Width	W - 95	W - 95		W - 95		W - 95	OF to ℄M - 81.5	OF to ℄M - 81.5	W - 95	℄M to ℄M - 68	℄M to ℄M - 68	℄M to ℄M - 68	W - 95	OF to ℄M - 81.5	W - 95
	Glass Height	H - 95	OF to ℄T - 81.5		OF to ℄T - 81.5		OF to ℄T - 81.5	H - 95	OF to ℄T - 81.5	OF to ℄T - 81.5	H - 95	H - 95	OF to ℄T - 81.5	OF to ℄T - 81.5	H - 95	OF to ℄T - 81.5

Legend

W	=	Outer Frame Width (Longest Leg)
H	=	Outer Frame Height (Longest Leg)
℄T	=	Centre Line of Transom
℄M	=	Centre Line of Mullion
OF	=	Edge of Outer Frame (Longest Leg)

Sections

Outer Frame:	ETC4110, ETC4112
Sash:	ETC4120
Fixed Light:	ETC4147
Transom/Mullion:	ETC4130

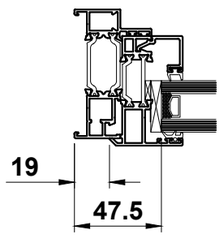

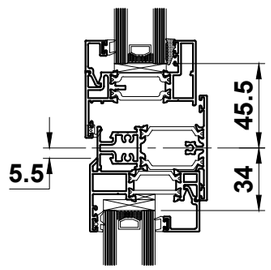

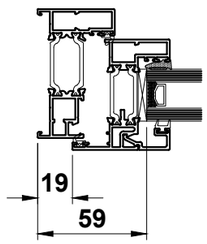

Do Not Scale From This Drawing

Cutting Information

PART DESCRIPTIONS		TYPICAL STYLES														
		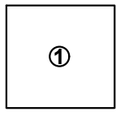	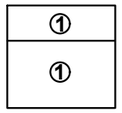	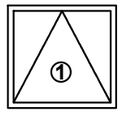	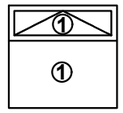		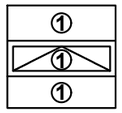	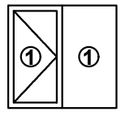	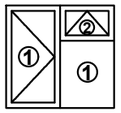	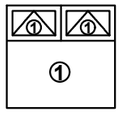	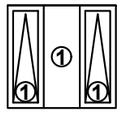			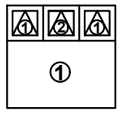	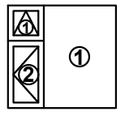	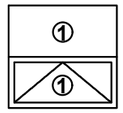
Outer Frame	Head & Cill	W	W	W	W	W	W	W	W	W	W	W	W	W	W	W
	Jambs	H	H	H	H	H	H	H	H	H	H	H	H	H	H	H
	Transoms		W - 28		W - 28	W - 28	W - 28		OF to ℄M - 17	W - 28		OF to ℄M - 17	℄M to ℄M - 6	W - 28	OF to ℄M - 17	W - 28
	Mullions							H - 28	H - 28	OF to ℄T - 17	H - 28	H - 28	H - 28	OF to ℄T - 17	H - 28	
Vent (1)	Horizontal Members			W - 38	W - 38	W - 38	W - 38	OF to ℄M - 27	OF to ℄M - 27	OF to ℄M - 27	OF to ℄M - 27	OF to ℄M - 27	OF to ℄M - 27	OF to ℄M - 27	OF to ℄M - 27	W - 38
	Vertical Members			H - 38	OF to ℄T - 27	OF to ℄T - 27	℄T to ℄T - 16	H - 38	H - 38	OF to ℄T - 27	H - 38	OF to ℄T - 27	H - 38	OF to ℄T - 27	OF to ℄T - 27	OF to ℄T - 27
	Glass Width			W - 138	W - 138	W - 138	W - 138	OF to ℄M - 127	OF to ℄M - 127	OF to ℄M - 127	OF to ℄M - 127	OF to ℄M - 127	OF to ℄M - 127	OF to ℄M - 127	OF to ℄M - 127	W - 138
	Glass Height			H - 138	OF to ℄T - 127	OF to ℄T - 127	OF to ℄T - 127	H - 138	H - 138	OF to ℄T - 127	H - 138	OF to ℄T - 127	H - 138	OF to ℄T - 127	OF to ℄T - 127	OF to ℄T - 127
Vent (2)	Horizontal Members					W - 38			OF to ℄M - 27			OF to ℄M - 27	℄M to ℄M - 16	℄M to ℄M - 16	OF to ℄M - 27	
	Vertical Members					OF to ℄T - 27			OF to ℄T - 27			OF to ℄T - 27	OF to ℄T - 27	OF to ℄T - 27	OF to ℄T - 27	
	Glass Width					W - 138			OF to ℄M - 127			OF to ℄M - 127	℄M to ℄M - 116	℄M to ℄M - 116	OF to ℄M - 127	
	Glass Height					OF to ℄T - 127			OF to ℄T - 127			OF to ℄T - 127	OF to ℄T - 127	OF to ℄T - 127	OF to ℄T - 127	
Fixed Pane (1)	Glass Width	W - 60	W - 60		W - 60		W - 60	OF to ℄M - 49	OF to ℄M - 49	W - 60	℄M to ℄M - 38	℄M to ℄M - 38	℄M to ℄M - 38	W - 60	OF to ℄M - 49	W - 60
	Glass Height	H - 60	OF to ℄T - 49		OF to ℄T - 49		OF to ℄T - 49	H - 60	OF to ℄T - 49	OF to ℄T - 49	H - 60	H - 60	OF to ℄T - 49	OF to ℄T - 49	H - 60	OF to ℄T - 49

Legend

W	=	Outer Frame Width (Longest Leg)
H	=	Outer Frame Height (Longest Leg)
℄T	=	Centre Line of Transom
℄M	=	Centre Line of Mullion
OF	=	Edge of Outer Frame (Longest Leg)

Sections

Outer Frame:	ETC4115
Sash:	ETC4129
Fixed Light:	Beaded
Transom/Mullion:	ETC4135

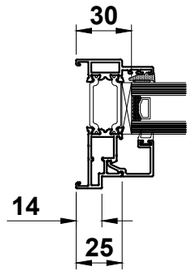

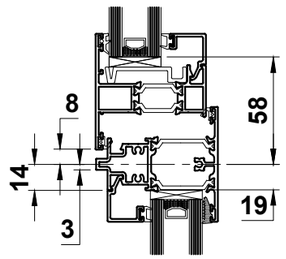

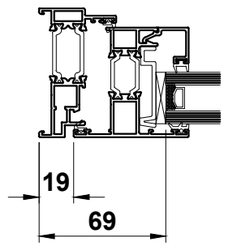

Do Not Scale From This Drawing

PART DESCRIPTIONS	TYPICAL STYLES	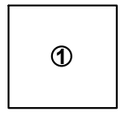	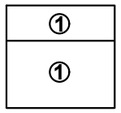	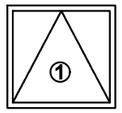	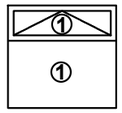	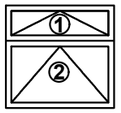	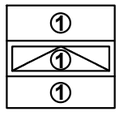	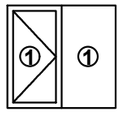	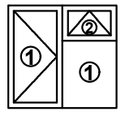	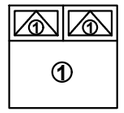	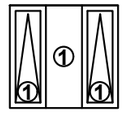	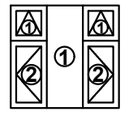	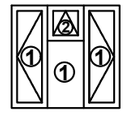	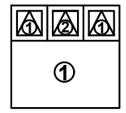	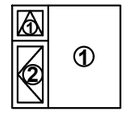	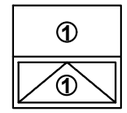
Outer Frame	Head & Cill	W	W	W	W	W	W	W	W	W	W	W	W	W	W	W
	Jambs	H	H	H	H	H	H	H	H	H	H	H	H	H	H	H
	Transoms		W - 28		W - 28	W - 28	W - 28		OF to ℄M - 17	W - 28		OF to ℄M - 17	℄M to ℄M - 6	W - 28	OF to ℄M - 17	W - 28
	Mullions							H - 28	H - 28	OF to ℄T - 17	H - 28	H - 28	H - 28	OF to ℄T - 17	H - 28	
Vent (1)	Horizontal Members			W - 38	W - 38	W - 38	W - 38	OF to ℄M - 27	OF to ℄M - 27	OF to ℄M - 27	OF to ℄M - 27	OF to ℄M - 27	OF to ℄M - 27	OF to ℄M - 27	OF to ℄M - 27	W - 38
	Vertical Members			H - 38	OF to ℄T - 27	OF to ℄T - 27	℄T to ℄T - 16	H - 38	H - 38	OF to ℄T - 27	H - 38	OF to ℄T - 27	H - 38	OF to ℄T - 27	OF to ℄T - 27	OF to ℄T - 27
	Glass Width			W - 113	W - 113	W - 113	W - 113	OF to ℄M - 102	OF to ℄M - 102	OF to ℄M - 102	OF to ℄M - 102	OF to ℄M - 102	OF to ℄M - 102	OF to ℄M - 102	OF to ℄M - 102	W - 113
	Glass Height			H - 113	OF to ℄T - 102	OF to ℄T - 102	OF to ℄T - 102	H - 113	H - 113	OF to ℄T - 102	H - 113	OF to ℄T - 102	H - 113	OF to ℄T - 102	OF to ℄T - 102	OF to ℄T - 102
Vent (2)	Horizontal Members					W - 38			OF to ℄M - 27			OF to ℄M - 27	℄M to ℄M - 16	℄M to ℄M - 16	OF to ℄M - 27	
	Vertical Members					OF to ℄T - 27			OF to ℄T - 27			OF to ℄T - 27	OF to ℄T - 27	OF to ℄T - 27	OF to ℄T - 27	
	Glass Width					W - 113			OF to ℄M - 102			OF to ℄M - 102	℄M to ℄M - 102	℄M to ℄M - 102	OF to ℄M - 102	
	Glass Height					OF to ℄T - 102			OF to ℄T - 102			OF to ℄T - 102	OF to ℄T - 102	OF to ℄T - 102	OF to ℄T - 102	
Fixed Pane (1)	Glass Width	W - 60	W - 60		W - 60		W - 60	OF to ℄M - 49	OF to ℄M - 49	W - 60	℄M to ℄M - 38	℄M to ℄M - 38	℄M to ℄M - 38	W - 60	OF to ℄M - 49	W - 60
	Glass Height	H - 60	OF to ℄T - 49		OF to ℄T - 49		OF to ℄T - 49	H - 60	OF to ℄T - 49	OF to ℄T - 49	H - 60	H - 60	OF to ℄T - 49	OF to ℄T - 49	H - 60	OF to ℄T - 49

Legend

W	=	Outer Frame Width (Longest Leg)
H	=	Outer Frame Height (Longest Leg)
℄T	=	Centre Line of Transom
℄M	=	Centre Line of Mullion
OF	=	Edge of Outer Frame (Longest Leg)

Sections

Outer Frame:	ETC4115
Sash:	ETC4124
Fixed Light:	Beaded
Transom/Mullion:	ETC4135

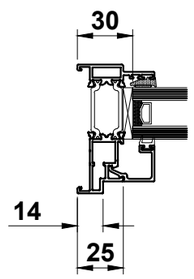

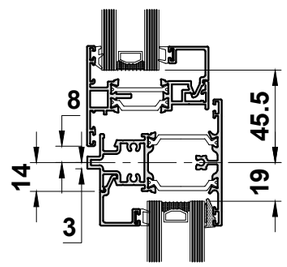

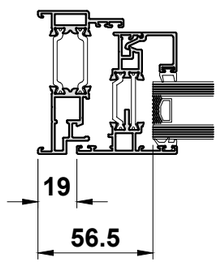

Do Not Scale From This Drawing

PART DESCRIPTIONS	TYPICAL STYLES	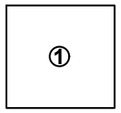	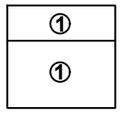	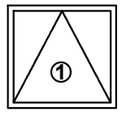	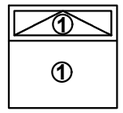		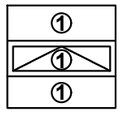	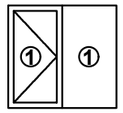	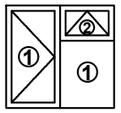	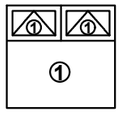	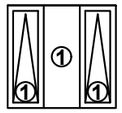			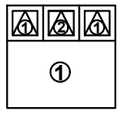	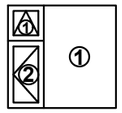	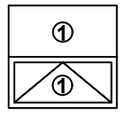
Outer Frame	Head & Cill	W	W	W	W	W	W	W	W	W	W	W	W	W	W	W
	Jambs	H	H	H	H	H	H	H	H	H	H	H	H	H	H	H
	Transoms		W - 65		W - 65	W - 65	W - 65		OF to ℄M - 44	W - 65		OF to ℄M - 44	℄M to ℄M - 23	W - 65	OF to ℄M - 44	W - 65
	Mullions							H - 65	H - 65	OF to ℄T - 44	H - 65	H - 65	H - 65	OF to ℄T - 44	H - 65	
Vent (1)	Horizontal Members			W - 53	W - 53	W - 53	W - 53	OF to ℄M - 32	OF to ℄M - 32	OF to ℄M - 32	OF to ℄M - 32	OF to ℄M - 32	OF to ℄M - 32	OF to ℄M - 32	OF to ℄M - 32	W - 53
	Vertical Members			H - 53	OF to ℄T - 32	OF to ℄T - 32	℄T to ℄T - 11	H - 53	H - 53	OF to ℄T - 32	H - 53	OF to ℄T - 32	H - 53	OF to ℄T - 32	OF to ℄T - 32	OF to ℄T - 32
	Glass Width			W - 127	W - 127	W - 127	W - 127	OF to ℄M - 106	OF to ℄M - 106	OF to ℄M - 106	OF to ℄M - 106	OF to ℄M - 106	OF to ℄M - 106	OF to ℄M - 106	OF to ℄M - 106	W - 127
	Glass Height			H - 127	OF to ℄T - 106	OF to ℄T - 106	OF to ℄T - 106	H - 127	H - 127	OF to ℄T - 106	H - 127	OF to ℄T - 106	H - 127	OF to ℄T - 106	OF to ℄T - 106	OF to ℄T - 106
Vent (2)	Horizontal Members					W - 53			OF to ℄M - 32			OF to ℄M - 32	℄M to ℄M - 11	℄M to ℄M - 11	OF to ℄M - 32	
	Vertical Members					OF to ℄T - 32			OF to ℄T - 32			OF to ℄T - 32	OF to ℄T - 32	OF to ℄T - 32	OF to ℄T - 32	
	Glass Width					W - 127			OF to ℄M - 106			OF to ℄M - 106	℄M to ℄M - 86	℄M to ℄M - 86	OF to ℄M - 106	
	Glass Height					OF to ℄T - 106			OF to ℄T - 106			OF to ℄T - 106	OF to ℄T - 106	OF to ℄T - 106	OF to ℄T - 106	
Fixed Pane (1)	Glass Width	W - 75	W - 75		W - 75		W - 75	OF to ℄M - 54	OF to ℄M - 54	W - 75	℄M to ℄M - 33	℄M to ℄M - 33	℄M to ℄M - 33	W - 75	OF to ℄M - 54	W - 75
	Glass Height	H - 75	OF to ℄T - 54		OF to ℄T - 54		OF to ℄T - 54	H - 75	OF to ℄T - 54	OF to ℄T - 54	H - 75	H - 75	OF to ℄T - 54	OF to ℄T - 54	H - 75	OF to ℄T - 54

Legend

W	=	Outer Frame Width (Longest Leg)
H	=	Outer Frame Height (Longest Leg)
℄T	=	Centre Line of Transom
℄M	=	Centre Line of Mullion
OF	=	Edge of Outer Frame (Longest Leg)

Sections

Outer Frame:	ETC4111
Sash:	ETC4124, ETC4125
Fixed Light:	Beaded
Transom/Mullion:	ETC4130

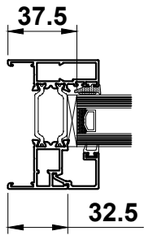

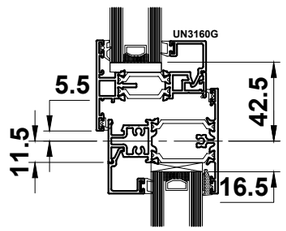

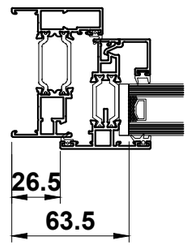

Do Not Scale From This Drawing

PART DESCRIPTIONS	TYPICAL STYLES	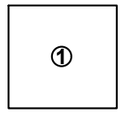	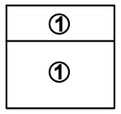		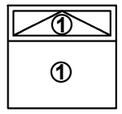	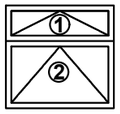	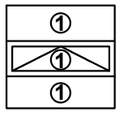	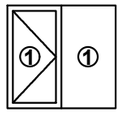	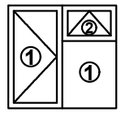	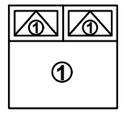	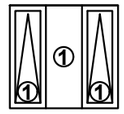		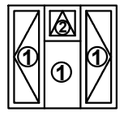	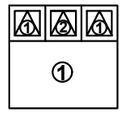	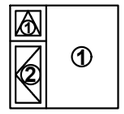	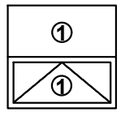
Outer Frame	Head & Cill	W	W	W	W	W	W	W	W	W	W	W	W	W	W	W
	Jambs	H	H	H	H	H	H	H	H	H	H	H	H	H	H	H
	Transoms		W - 43		W - 43	W - 43	W - 43		OF to ℄M - 24.5	W - 43		OF to ℄M - 24.5	℄M to ℄M - 6	W - 43	OF to ℄M - 24.5	W - 43
	Mullions							H - 43	H - 43	OF to ℄T - 24.5	H - 43	H - 43	H - 43	OF to ℄T - 24.5	H - 43	
Vent (1)	Horizontal Members			W - 53	W - 53	W - 53	W - 53	OF to ℄M - 34.5	OF to ℄M - 34.5	OF to ℄M - 34.5	OF to ℄M - 34.5	OF to ℄M - 34.5	OF to ℄M - 34.5	OF to ℄M - 34.5	OF to ℄M - 34.5	W - 53
	Vertical Members			H - 53	OF to ℄T - 34.5	OF to ℄T - 34.5	℄T to ℄T - 16	H - 53	H - 53	OF to ℄T - 34.5	H - 53	OF to ℄T - 34.5	H - 53	OF to ℄T - 34.5	OF to ℄T - 34.5	OF to ℄T - 34.5
	Glass Width			W - 127	W - 127	W - 127	W - 127	OF to ℄M - 108.5	OF to ℄M - 108.5	OF to ℄M - 108.5	OF to ℄M - 108.5	OF to ℄M - 108.5	OF to ℄M - 108.5	OF to ℄M - 108.5	OF to ℄M - 108.5	W - 127
	Glass Height			H - 127	OF to ℄T - 108.5	OF to ℄T - 108.5	OF to ℄T - 108.5	H - 127	H - 127	OF to ℄T - 108.5	H - 127	OF to ℄T - 108.5	H - 127	OF to ℄T - 108.5	OF to ℄T - 108.5	OF to ℄T - 108.5
Vent (2)	Horizontal Members					W - 53			OF to ℄M - 34.5			OF to ℄M - 34.5	℄M to ℄M - 16	℄M to ℄M - 16	OF to ℄M - 34.5	
	Vertical Members					OF to ℄T - 34.5			OF to ℄T - 34.5			OF to ℄T - 34.5	OF to ℄T - 34.5	OF to ℄T - 34.5	OF to ℄T - 34.5	
	Glass Width					W - 127			OF to ℄M - 108.5			OF to ℄M - 108.5	℄M to ℄M - 91	℄M to ℄M - 91	OF to ℄M - 108.5	
	Glass Height					OF to ℄T - 108.5			OF to ℄T - 108.5			OF to ℄T - 108.5	OF to ℄T - 108.5	OF to ℄T - 108.5	OF to ℄T - 108.5	
Fixed Pane (1)	Glass Width	W - 75	W - 75		W - 75		W - 75	OF to ℄M - 56.5	OF to ℄M - 56.5	W - 75	℄M to ℄M - 38	℄M to ℄M - 38	℄M to ℄M - 38	W - 75	OF to ℄M - 56.5	W - 75
	Glass Height	H - 75	OF to ℄T - 56.5		OF to ℄T - 56.5		OF to ℄T - 56.5	H - 75	OF to ℄T - 56.5	OF to ℄T - 56.5	H - 75	H - 75	OF to ℄T - 56.5	OF to ℄T - 56.5	H - 75	OF to ℄T - 56.5

Legend

W	=	Outer Frame Width (Longest Leg)
H	=	Outer Frame Height (Longest Leg)
℄T	=	Centre Line of Transom
℄M	=	Centre Line of Mullion
OF	=	Edge of Outer Frame (Longest Leg)

Sections

Outer Frame:	ETC4116
Sash:	ETC4124, ETC4125
Fixed Light:	Beaded
Transom/Mullion:	ETC4135

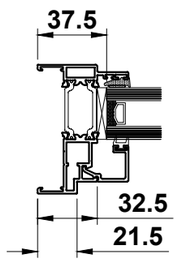

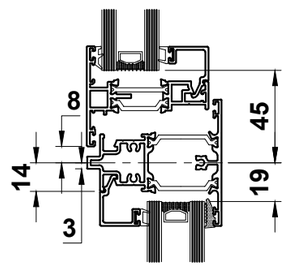

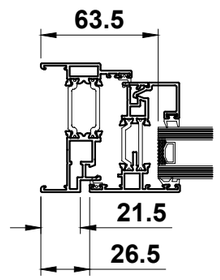

Do Not Scale From This Drawing

PART DESCRIPTIONS	TYPICAL STYLES	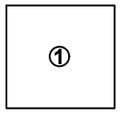	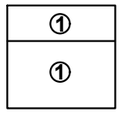		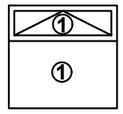	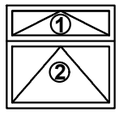	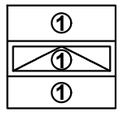	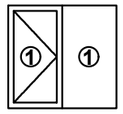	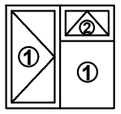	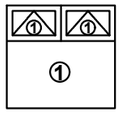	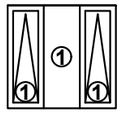			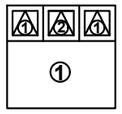	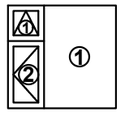	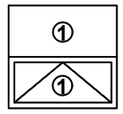
Outer Frame	Head & Cill	W	W	W	W	W	W	W	W	W	W	W	W	W	W	W
	Jambs	H	H	H	H	H	H	H	H	H	H	H	H	H	H	H
	Transoms		W-90		W-90	W-90	W-90		O/F to CLM-56.5	W-90		O/F to CLM-56.5	CLMto CLM-23	W-90	O/F to CLM-56.5	W-90
	Mullions							H-90	H-90	O/F to CLT-56.5	H-90	H-90	H-90	O/F to CLT-39	H-90	
Vent (1)	Horizontal Members			W-78	W-78	W-78	W-78	O/F to CLM-44.5	O/F to CLM-44.5	O/F to CLM-44.5	O/F to CLM-44.5	O/F to CLM-44.5	O/F to CLM-44.5	O/F to CLT-44.5	O/F to CLM-44.5	W-78
	Vertical Members			H-78	O/F to CLT-44.5	O/F to CLT-44.5	CLT to CLT-11	H-78	H-78	O/F to CLT-44.5	H-78	O/F to CLT-44.5	H-78	O/F to CLT-44.5	O/F to CLT-44.5	O/F to CLT-44.5
	Glass Width					W-78			O/F to CLM-44.5			O/F to CLM-44.5	CLM to CLM-11	CLM to CLM-11	O/F to CLM-44.5	
	Glass Height					O/F to CLT-44.5			O/F to CLT-44.5			O/F to CLT-44.5	O/F to CLT-44.5	O/F to CLT-44.5	O/F to CLT-44.5	
Vent (2)	Horizontal Members			W-178	W-178	W-178	W-178	O/F to CLM-144.5	O/F to CLM-144.5	O/F to CLM-144.5	O/F to CLM-144.5	O/F to CLM-144.5	O/F to CLM-144.5	O/F to CLM-144.5	O/F to CLM-144.5	W-178
	Vertical Members			H-178	O/F to CLT-144.5	O/F to CLT-144.5	O/F to CLT-144.5	H-178	H-178	O/F to CLT-144.5	H-178	O/F to CLT-144.5	H-178	O/F to CLT-144.5	O/F to CLT-144.5	O/F to CLT-144.5
	Glass Width					W-178			O/F to CLM-144.5			O/F to CLM-144.5	CLM to CLM-111	CLM to CLM-111	CLM to CLM-111	
	Glass Height					O/F to CLT-144.5			O/F to CLT-144.5			O/F to CLT-144.5	O/F to CLT-144.5	O/F to CLT-144.5	O/F to CLT-144.5	
Fixed Pane (1)	Glass Width	W-100	W-100		W-100		W-100	O/F to CLM -66.5	O/F to CLM -66.5	W-100	CLM to CLM -33	CLM to CLM -33	CLM to CLM -33	W-100	O/F to CLM -66.5	W-100
	Glass Height	H-100	O/F to CLT -66.5		O/F to CLT -66.5		O/F to CLT -66.5	H-100	O/F to CLT -66.5	O/F to CLT -66.5	H-100	H-100	O/F to CLT -66.5	O/F to CLT -66.5	H-100	O/F to CLT -66.5

Legend

W	=	Outer Frame Width (Longest Leg)
H	=	Outer Frame Height (Longest Leg)
℄T	=	Centre Line of Transom
℄M	=	Centre Line of Mullion
OF	=	Edge of Outer Frame (Longest Leg)

Sections

Outer Frame:	ETC4101
Sash:	ETC4129
Fixed Light:	Beaded
Transom/Mullion:	ETC4130

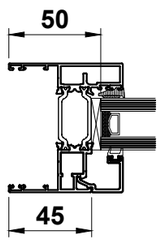

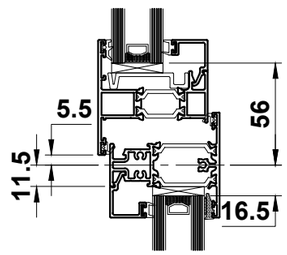

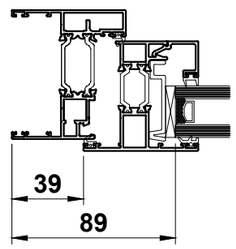

Do Not Scale From This Drawing

PART DESCRIPTIONS	TYPICAL STYLES	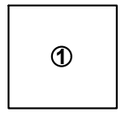	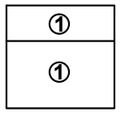		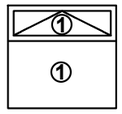	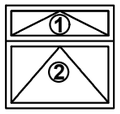	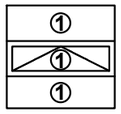	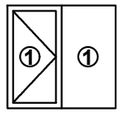	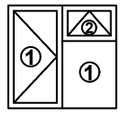	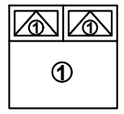	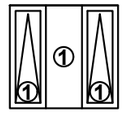		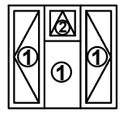	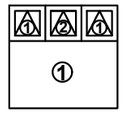	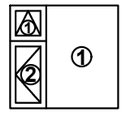	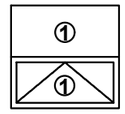
Outer Frame	Head & Cill	W	W	W	W	W	W	W	W	W	W	W	W	W	W	W
	Jambs	H	H	H	H	H	H	H	H	H	H	H	H	H	H	H
	Transoms		W-77		W-77	W-77	W-77		O/F to CLM-52	W-77		O/F to CLM-52	CLMto CLM-27	W-77	O/F to CLM-52	W-77
	Mullions							H-77	H-77	O/F to CLT-52	H-77	H-77	H-77	O/F to CLT-36.5	H-77	
Vent (1)	Horizontal Components			W-108	W-108	W-108	W-108	O/F to CLM-83	O/F to CLM-83	O/F to CLM-83	O/F to CLM-83	O/F to CLM-83	O/F to CLM-83	O/F to CLT-83	O/F to CLM-83	W-108
	Vertical Components			H-108	O/F to CLT-83	O/F to CLT-83	CLT to CLT-58	H-108	H-108	O/F to CLT-83	H-108	O/F to CLT-83	H-108	O/F to CLT-83	O/F to CLT-83	O/F to CLT-83
Vent (2)	Horizontal Components					W-108			O/F to CLM-83			O/F to CLM-83	CLM to CLM-58	CLM to CLM-58	O/F to CLM-83	
	Vertical Components					O/F to CLT-83			O/F to CLT-83			O/F to CLT-83	O/F to CLT-83	O/F to CLT-83	O/F to CLT-83	
Vent (1)	Glass Width			W-208	W-208	W-208	W-208	O/F to CLM-183	O/F to CLM-183	O/F to CLM-183	O/F to CLM-183	O/F to CLM-183	O/F to CLM-183	O/F to CLM-183	O/F to CLM-183	W-208
	Glass Height			H-208	O/F to CLT-183	O/F to CLT-183	O/F to CLT-183	H-208	H-208	O/F to CLT-183	H-208	O/F to CLT-183	H-208	O/F to CLT-183	O/F to CLT-183	O/F to CLT-183
Vent (2)	Glass Width					O/F to CLM-183			O/F to CLM-183			O/F to CLM-183	CLM to CLM-158	CLM to CLM-158	CLM to CLM-158	
	Glass Height					O/F to CLT-183			O/F to CLT-183			O/F to CLT-183	O/F to CLT-183	O/F to CLT-183	O/F to CLT-183	
	Reverse Adaptor Width	W-65	W-65		W-65		W-65	O/F to CLM -40	O/F to CLM -40	W-38	O/F to CLM -40	CLM to CLM -15	CLM to CLM -15	W-65	CLM to CLM -15	W-65
"Fixed Pane (1)"	Reverse Adaptor Height	H-65	O/F to CLT -40		O/F to CLT -40		O/F to CLT -40	H-65	O/F to CLT -40	O/F to CLT -40	H-65	H-65	O/F to CLT -40	O/F to CLT -40	H-65	O/F to CLT -40
	Glass Width	W-0	W-0		W-0		W-0	O/F to CLM -5.5	O/F to CLM -5.5	W-0	CLM to CLM -11	CLM to CLM -11	CLM to CLM -11	W-0	O/F to CLM -5.5	W-0
	Glass Height	H-0	O/F to CLT -5.5		O/F to CLT -5.5		O/F to CLT -5.5	H-0	O/F to CLT -5.5	O/F to CLT -5.5	H-0	H-0	O/F to CLT -5.5	O/F to CLT -5.5	H-0	O/F to CLT -5.5

Legend

W	=	Outer Frame Width (Longest Leg)
H	=	Outer Frame Height (Longest Leg)
℄T	=	Centre Line of Transom
℄M	=	Centre Line of Mullion
OF	=	Edge of Outer Frame (Longest Leg)

Sections

Outer Frame:	ETC4410
Sash:	ETC4129
Fixed Light:	ETC4446
Transom/Mullion:	ETC4430

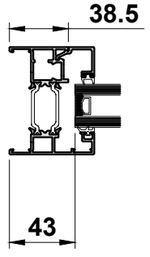

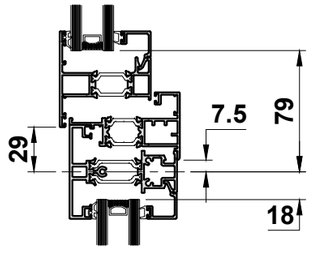

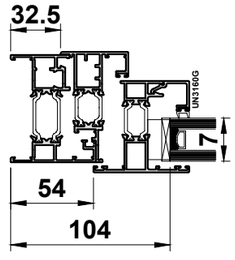

Do Not Scale From This Drawing