Main Index

Updates

DATE	PAGE	DESCRIPTION
JUNE 2024	ALL PAGES	SPLIT MANUAL

Specification

GENERAL DESCRIPTION

The Alitherm 400 Door system described in this manual is suitable for domestic or commercial applications as replacement doors for existing buildings, and for installation into new buildings.

The Alitherm 400 Door provides the option of mechanical joints using punch tooling on outer frame and sash.

Stepped & Flush designs are available as:

- Single Open In Doors
- Double Open In Doors
- Single Open Out Doors
- Double Open Out Doors

Alitherm 400 door features Quick-Glaze Beads with integrated gasket, providing a fast and efficient glazing process. Non integrated gasket options are also available.

PROFILE SPECIFICATION

The door frames are constructed of aluminium alloy extrusion to BS EN 755-9 and BS EN 12020, extruded to 6063 T6 alloy. The internal and external extrusions are separated with a polyamide thermal break.

The external aluminium alloy extrusion is pre-treated and finished either:-

a) Anodised to BS 3987: 1987, grade AA25 to a natural self colour.

b) Polyester powder organic coating to BS 6496. Dual colour is available.

Specification

GENERAL MANUFACTURING

Outer and sash frames are made by cutting the frame profiles with accurate 45° mitred ends using Tungsten Carbide Tipped Saw Blades, operating at approximately 3000 rpm.

The outer frame corner and sash joints can be made using mechanically fixed corner cleats by punching the corners using the relevant punch tooling shown in section E of this manual. The ends of transoms and mullions are profiled to fit the frame and fixed using self-tapping screws with a small joint sealant.

On polyester powder coated finishes, great care should be taken to avoid getting gap sealer on visible surfaces and should be removed as soon as possible with a clean cloth.

Important Note: All exposed aluminium should be coated using ACSIL014 or painted to match the frame.

Care should be exercised when using products not supplied by Smart Systems Ltd as no responsibility can be accepted.

Size Limitations

Door Type	Min Leaf Width (mm)	Max Leaf Width (mm)	Max Leaf Height (mm)	Overall Width (mm)	Overall Height (mm)
Single Door Open In	600	1100	2400	1164	2464
Double Door Open In	600	1100	2400	2276	2464
Single Door Open Out	600	1100	2400	1164	2464
Double Door Open Out	600	1100	2400	2276	2464

Important Notes:

1. Max leaf weight 100kg
2. Size limitations are based on current profiles using full frame

For advise on door sizes outside of the recommended design limitations, please contact the Technical Department at Smart Systems Ltd Tel: 01934 876100

Specification

DOOR DRAINAGE

As with all dry glazed systems, it is recommended that the door system is adequately drained and ventilated. Refer to drainage details in manual, if in doubt ask The Technical Department.

In order to get maximum performance and weather resistance, it is recommended that drips are used above all open-out door leaves and at the bottom of all open-in doors. it is also recommended to use at the bottom of open-out doors where the low ramp threshold are used.

OUTER FRAME MANUFACTURING INFORMATION

The outer frame members are cut with 45° mitred ends to the overall size required, measured to the longest point of the metal.

Prior to corner assembly the centre line position of any transoms/mullions or mid-rail should be marked on the outer frame members. Where the transom/mullion runs right through, it should be marked out on both jambs or head and cill members in pairs to ensure accurate alignment of the sections.

Using the marked centre line, drill the transom/mullion fixing holes using a 5mm dia. drill bit.

Corners are formed by either drilling or punching, the corners ready for the cleat machine screws. Then, coating the cut faces to be joined with ACSIL04. Into the mitred corner insert the ACSIL013 and the required corner cleats. The two mitred ends are then brought together and screwed. ACSIL04 ensures a permanent joint and guards against the ingress of moisture and joint movement. After screwing the corner joint, special care should be taken to ensure any excess ACSIL04 is removed from painted surfaces

Transoms or mullions are cut with square ends to the sizes calculated on the cutting formula sheets. The ends are then profiled to allow them to fit into the outer frame. Special tooling is available on request to profile the end of transom/mullion.

Prior to fixing of transoms and mullions smear the cut ends with ACSIL04. After fixing, special care should be taken to ensure any excess is cleared from painted surfaces.

Specification

SASH

Corners are formed by either drilling or punching, the corners ready for the cleat machine screws. Then, coating the cut faces to be joined with ACSIL04. Into the mitred corner insert the ACSIL013 and the required corner cleats. The two mitred ends are then brought together and screwed. ACSIL04 ensures a permanent joint and guards against the ingress of moisture and joint movement. After screwing the corner joint, special care should be taken to ensure any excess ACSIL04 is removed from painted surfaces

INTERNALLY BEADED ADAPTOR FRAME

The internally beaded adaptor frame members are cut with 45° mitred ends to the overall size required, measured to the longest point of metal. Care should be taken when measuring and cutting the frame members as only nominal clearance is required when the assembled frame is fixed in the outer frame.

Corners are formed by coating the cut faces to be joined with a suitable small gap sealer. Into the mitred corner insert the ACSIL013 and a corner cleat and the required corner chevrons. ACSIL04 ensures a permanent joint and guards against the ingress of moisture and joint movements. Care should be taken to ensure any excess sealer is removed from painted surfaces.

Alitherm 400 Door Weather Performance (BS6375-1)

Low thresholds have not been weather tested as they are unlikely to exceed UK exposure category 800 X shown below:

See pages A08 & A09.

Alitherm 400 Door Security (PAS 24)

Alitherm 400 door standard parts are able to achieve PAS24 requirement.

Alitherm 400 Door U Values

Please refer to the Smart Systems' Document L White Paper or contact the Technical Department.

Specification

GLAZING

All beads are cut to suit the glazing aperture on the fully assembled door for glazing either at factory or on site as required.

INTERNALLY BEADED GLAZING

Glazing beads are fitted to openings by cutting the horizontal beads square to head and cill of each sash and reverse adaptor area. Vertical beads are cut square at both ends. Insert bottom beads and two setting blocks to ensure glass will be centralized in vertical dimension of opening (glazing blocks must be full width of cavity to fully support glass or sealed unit), then insert top bead followed by side beads. Finish glazing by insertion of internal gaskets all round.

Specification

Kitemark™ Certificate

Aluminium Alloy Residential Door System (Slam lock/Key wind/Lift lever)

BS 6375:2016 / PAS 24:2016 - General and enhanced security performance requirements for door assemblies.

Profiles:

Outer Frame: ETD402, 404, 410, 412, 490, 491, 492, 493, 495, 496, 497, 499
Sash: ETD4202, 4203, 4204, 4205, 422, 424, 446, 448
Mid-rail: ETD430, 4301, 4302, 432

Hardware:

Locking: ACUL272, ACUL273, ACUL280, ACUL281, ACUL282, ACUL283, ACUL360, ACUL361, ACUL362, ACUL363, ACUL263, ACUL374, ACUL375, ACUL377, ACUL378, ACUL380, ACUL381, ACUL382, ACUL383, ACUL390, ACDV737, ACDV738, ACDV742, ACDV744, ACPD884, ACPD846, ACPD847, ACPD848, ACPD849
Hinges: ACUL250, ACUL260
Hinge Protectors: ACET252 (not required for PAS24)
Handle: All handles listed in manual
Cylinder: ACCY3560NKS3, ACCY6035NKS3, ACCY3560NKTTS3, ACCY6035NKTTS3

Size Limitations And Performance Characteristics

Door Type	Leaf Width (mm) - Maximum	Leaf Height (mm) - Maximum	Air Permeability Classification	Watertightness Classification	Resistance To Wind Classification	Exposure Category As Given In Table 1 Of BS6375-1:2009
Double Leaf Open In Full Frame	1100	2400	Class 2 Air	Class 3A Water	C3	1200
Double Leaf Open Out Full Frame	1100	2400	Class 2 Air	Class 9A Water	A3	1200
Double Leaf Open In Low Rebate Threshold	1100	2400	Class 3 Air	Class 3A Water	A3	1200
Double Leaf Open Out Low Rebate Threshold	1100	2400	Class 2 Air	Class 4A Water	C3	1200

Specification

Kitemark™ Certificate

Aluminium Alloy Residential Door System (Lift Lever with cams)

BS 6375:2016 / PAS 24:2016 - General and enhanced security performance requirements for door assemblies.

Profiles:

Outer Frame: ETD402, 404, 410, 412, 490, 491, 492, 493, 495, 496, 497, 499
Sash: ETD4202, 4203, 4204, 4205, 422, 424, 445, 447
Mid-rail: ETD430, 4301, 4302, 432

Hardware:

Locking: ACUL267, ACUL268, ACUL276, ACUL277, ACUL278, ACUL279
Hinges: ACUL250, ACUL260
Hinge Protectors: ACET252 (not required for PAS24)
Handle: All handles listed in manual
Cylinder: ACCY3560NKS3, ACCY6035NKS3, ACCY3560NKTTS3, ACCY6035NKTTS3

Size Limitations And Performance Characteristics

Door Type	Leaf Width (mm) - Maximum	Leaf Height (mm) - Maximum	Air Permeability Classification	Watertightness Classification	Resistance To Wind Classification	Exposure Category As Given In Table 1 Of BS6375-1:2009
Double Leaf Open In Full Frame	1100	2400	Class 4 Air	Class 3A Water	C3	AB2400
Double Leaf Open Out Full Frame	1100	2400	Class 4 Air	Class E 1050 Water	C3	AE2400
Double Leaf Open In Low Rebate Threshold	NOT TESTED					
Double Leaf Open Out Low Rebate Threshold						

BLANK PAGE

Alitherm 400 Flush Door

PROFILES : TECHNICAL INFORMATION

Number	Picture	Page	Perim. mm	Mec. mm	Ix(cm4) wx(cm3)	Iy(cm4) wy(cm3)	Length	Pack pr.	MF	SA	KL	HP	M
ETD402	A 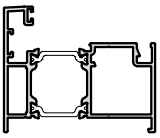 B	A18	378	144.8	34.66 ---- 8.75	12.59 ---- 4.75	6.5	1	✓	✓	✓	✓	✓
ETD404	A 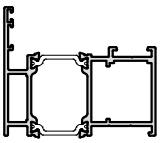 B	A18	420	105.4	34.65 — 9.05	12.26 — 5.22	6.5	1	✓	✓	✓	✓	✓
ETD412	A 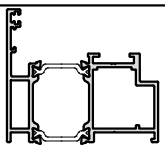 B Open In Shown Reverse For Open Out	A17	359	150.7	34.19 ---- 8.63	14.07 ---- 5.81	6.5	1	✓	✓	✓	✓	✓
ETD4202	A 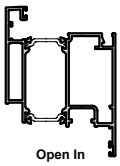 B Open In	A19	467	183.6	49.3 ---- 14.09	41.76 ---- 9.47	6.5	1	✓	✓	✓	✓	✓
ETD4203	A 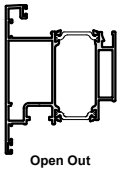 B Open Out	A19	465	182.6	47.29 ---- 11.88	40.65 ---- 9.20	6.5	1	✓	✓	✓	✓	✓
ETD422	A 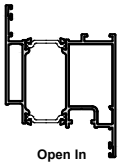 B Open In	A20	437	176.9	47.26 ---- 13.24	36.16 ---- 7.55	6.5	1	✓	✓	✓	✓	✓
ETD430	A 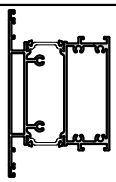 B	A26	711	203.7	63.34 — 16.20	81.07 — 14.00	6.5	1	✓	✓	✓	✓	✓
ETD4301	A 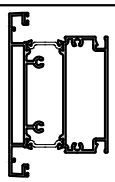 B	A24	512	218.7	61.58 ---- 15.24	100.49 ---- 17.33	6.5	1	✓	✓	✓	✓	✓
ETD4302	A 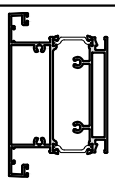 B	A25	513	218.7	65.13 ---- 18.45	99.66 ---- 17.18	6.5	1	✓	✓	✓	✓	✓

A = Outside
B = Inside

MF = Mill Finish
SA = Silver Anodised
KL = Basic Colour
HP = Special Colour
M = Dual Colour

Alitherm 400 Flush Door

PROFILES : TECHNICAL INFORMATION

Number	Picture	Page	Perim. mm	Mec. mm	Ix(cm4) wx(cm3)	Iy(cm4) wy(cm3)	Length	Pack pr.	MF	SA	KL	HP	M
ETD433	A 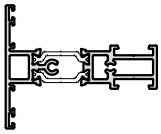 B	A27	402	89.8	29.52 ---- 7.17	4.96 ---- 1.75	6.5	1	✓	✓	✓	✓	✓
ETD445	A 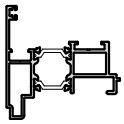 B Open In Shown Reverse for Open Out	A23	354	118.1	27.3 ---- 6.84	11.19 ---- 3.59	6.5	1	✓	✓	✓	✓	✓
ETD446	A 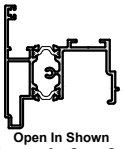 B Open In Shown Reverse for Open Out	A23	404	133.6	28.16 ---- 6.87	15.21 ---- 4.27	6.5	1	✓	✓	✓	✓	✓
ETD491	A 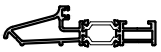 B	A21	297	73	34.80 ---- 7.07	1.57 ---- 1.61	6.5	1	✓	✓			
ETD493	A 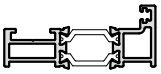 B	A21	216	54.9	13.93 ---- 4.18	1.12 ---- 1.11	6.5	1	✓	✓			
ETD497		A22	265	108.5	33.16 ---- 7.35	1.07 ---- 1.32	6.5	1	✓	✓			
ETD499	A 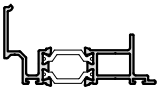 B Open In Shown Reverse for Open Out	A22	261	74.1	11.59 ---- 3.22	1.64 ---- 1.55	6.5	1	✓	✓	✓	✓	✓
ETC4179G ETC4179	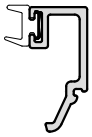	A28	104	29	- ---- -	- ---- -	6.5	1	✓	✓	✓	✓	
ETC451	A 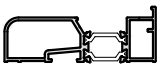 B	A35	271	180	32.44 — 7.29	3.46 — 2.79	6.5	1	✓	✓	✓	✓	✓

A = Outside
B = Inside

MF = Mill Finish
SA = Silver Anodised
KL = Basic Colour
HP = Special Colour
M = Dual Colour

ISSUED: JULY 2024

Alitherm 400 Flush Door

PROFILES : TECHNICAL INFORMATION

Number	Picture	Page	Perim. mm	Mec. mm	Ix(cm4) wx(cm3)	Iy(cm4) wy(cm3)	Length	Pack pr.	MF	SA	KL	HP	M
ETC452		A35	414	382	122.46 — 18.03	6.01 — 3.34	6.5	1	✓	✓	✓	✓	✓
ETC457		A35	444	412	163.27 — 21.60	6.79 — 3.73	6.5	1	✓	✓	✓	✓	✓
ETC458	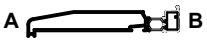	A36	524	492	313.62 — 32.63	8.87 — 4.79	6.5	1	✓	✓	✓	✓	✓
ETC479N		A36	594	559	501.64 — 44.04	9.72 — 5.34	6.5	1	✓	✓	✓	✓	✓
DV60		A23	21	---	- ----- -	- ----- -	6.5	1					
EUD03		A22	113	39	- ----- -	- ----- -	4	1	✓	✓			
PCX47	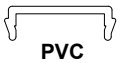	A20	43.4	---	- — -	- — -	6.5	1					
SR014		A33	110.4	31.7	- — -	- — -	7	1	✓	✓	✓	✓	
UL062	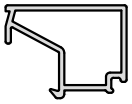	A30	115	49	- — -	- — -	6.5	1	✓	✓	✓	✓	

A = Outside
B = Inside

MF = Mill Finish
SA = Silver Anodised
KL = Basic Colour
HP = Special Colour
M = Dual Colour

Alitherm 400 Flush Door

PROFILES : TECHNICAL INFORMATION

Number	Picture	Page	Perim. mm	Mec. mm	Ix(cm4) wx(cm3)	Iy(cm4) wy(cm3)	Length	Pack pr.	MF	SA	KL	HP	M
UL067	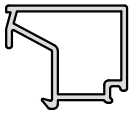	A30	110	46	- --- -	- --- -	6.5	1	✓	✓	✓	✓	
UL068	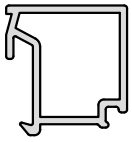	A30	101	40	- --- -	- --- -	6.5	1	✓	✓	✓	✓	
UL069	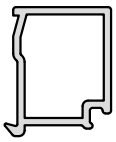	A30	87	48	- --- -	- --- -	6.5	1	✓	✓	✓	✓	
UL078	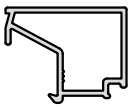	A30	120	51.9	- ---- -	- ---- -	6.5	1	✓	✓	✓	✓	
UL294	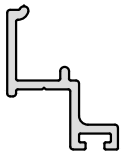	A21	102	37	- ---- -	- ---- -	6.5	1	✓	✓	✓	✓	
UN3010	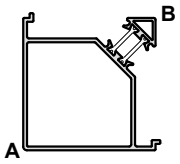	A32	369	226	41.4 --- 10.7	40 --- 11.6	6.5	1	✓	✓	✓	✓	✓
UN3160G UN3160	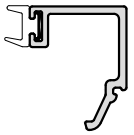	A28	120	39	- ---- -	- ---- -	6.5	1	✓	✓	✓	✓	
UN3162NG UN3162N	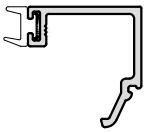	A28	105	41	- ---- -	- ---- -	6.5	1	✓	✓	✓	✓	
UN3164	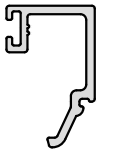	A29	112	33	- ---- -	- ---- -	6.5	1	✓	✓	✓	✓	

A = Outside
B = Inside

MF = Mill Finish
SA = Silver Anodised
KL = Basic Colour
HP = Special Colour
M = Dual Colour

ISSUED: JULY 2024

Number	Picture	Page	Perim. mm	Mec. mm	Ix(cm4) wx(cm3)	Iy(cm4) wy(cm3)	Length	Pack pr.	MF	SA	KL	HP	M
UN3166	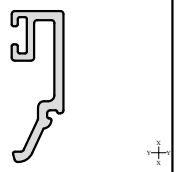	A29	99.5	30.6	- — -	- — -	6.5	1	✓	✓	✓	✓	
UN3168	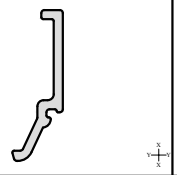	A29	99.5	30.6	- — -	- — -	6.5	1	✓	✓	✓	✓	
UN514	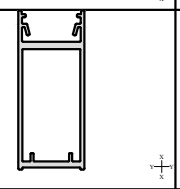	A33	282.7	157.1	35.14 — 8.74	8.86 — 5.47	6.5	1	✓	✓	✓	✓	
UN079 (VL72)	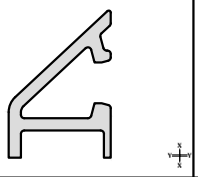	A20	99.5	30.6	- — -	- — -	6.5	1	✓	✓	✓	✓	
UN3015	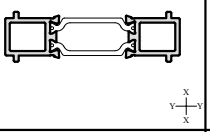	A31	214.5	56	18.1 --- 5.2	1 --- 1	6.5	1	✓	✓	✓	✓	✓
UN3020	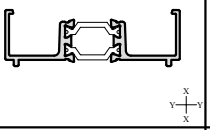	A31	281.6	70.4	14.8 --- 4.2	0.9 --- 1	6.5	1	✓	✓	✓	✓	✓
UN3042	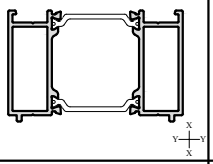	A31	288	111	31.2 --- 8.9	9.5 --- 4.3	6.5	1	✓	✓	✓	✓	✓
UN3370	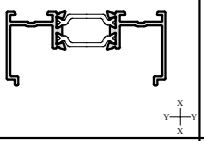	A32	360	61	18.4 --- 5.26	2.15 --- 1.97	6.5	1	✓	✓	✓	✓	✓
UN3570	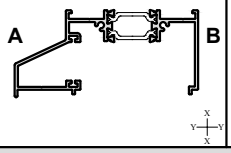	A34	545	140	47.47 --- 9.53	9.26 --- 4.87	6.5	1	✓	✓	✓	✓	✓

A = Outside
B = Inside

MF = Mill Finish
SA = Silver Anodised
KL = Basic Colour
HP = Special Colour
M = Dual Colour

BLANK PAGE

Primary Visible Side — — — — — — — — — — — — — — — — Secondary Visible Side — · — · — · — · — · — · — · — · —

ETD412

Flush Outer Frame

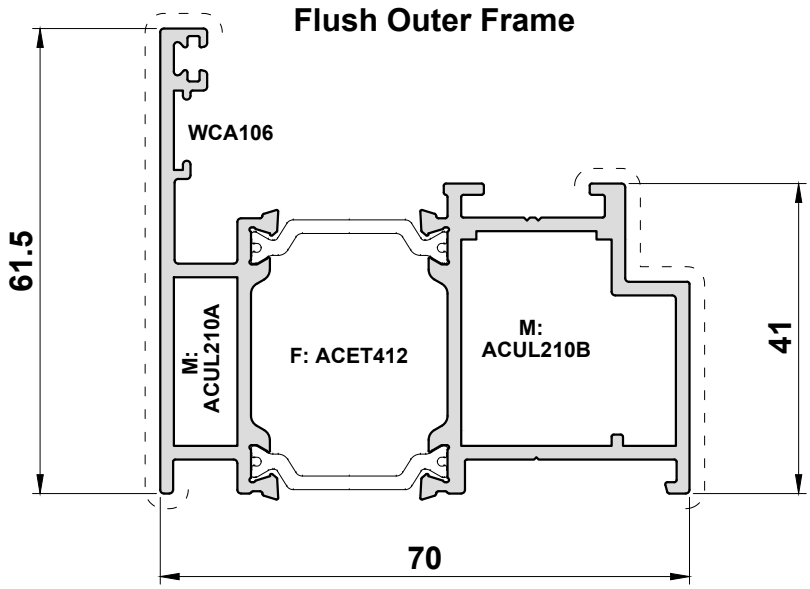

Scale 1:1

Primary Visible Side - - - - - - - - - - - - - - - - - - Secondary Visible Side — · — · — · — · — · — · —

ETD404
Flat Fixed Light

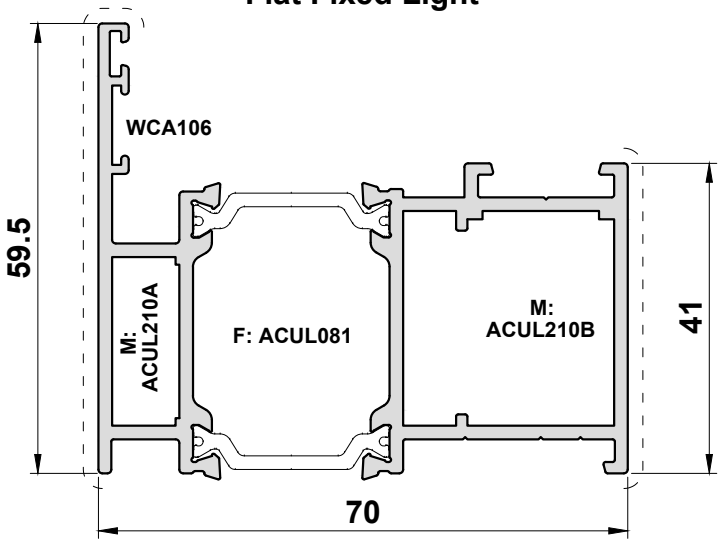

ETD402
Quick-Glaze Angled Fixed Light

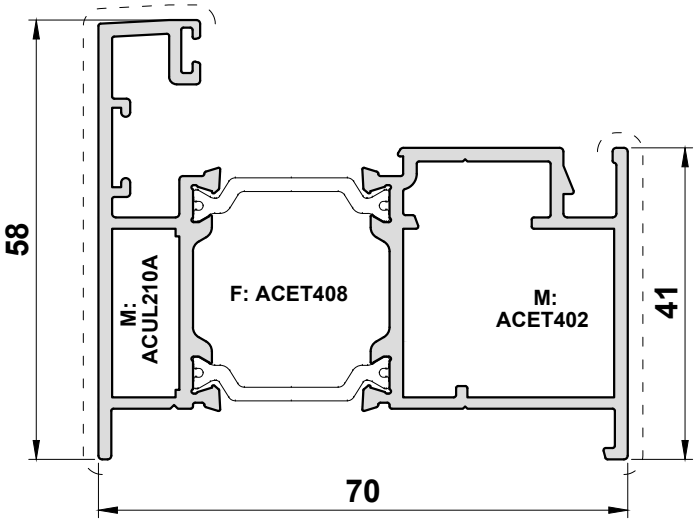

Scale 1:1

Primary Visible Side - - - - - - - - - - - - - - - - - - Secondary Visible Side — · — · — · — · — · — · —

ETD4202
Flush Open In
Quick-Glaze Angled Sash

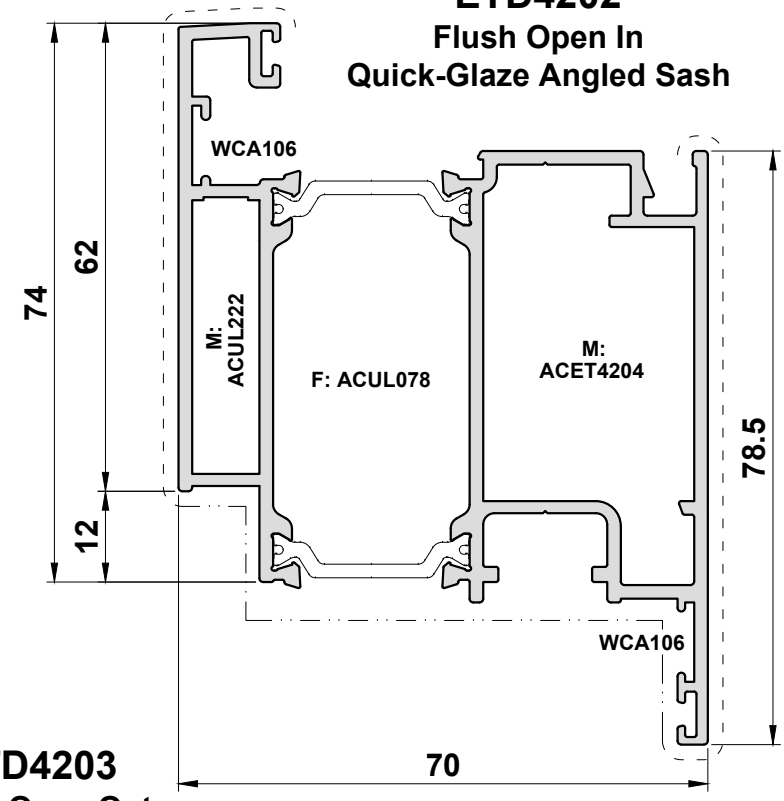

ETD4203
Flush Open Out
Quick-Glaze Angled Sash

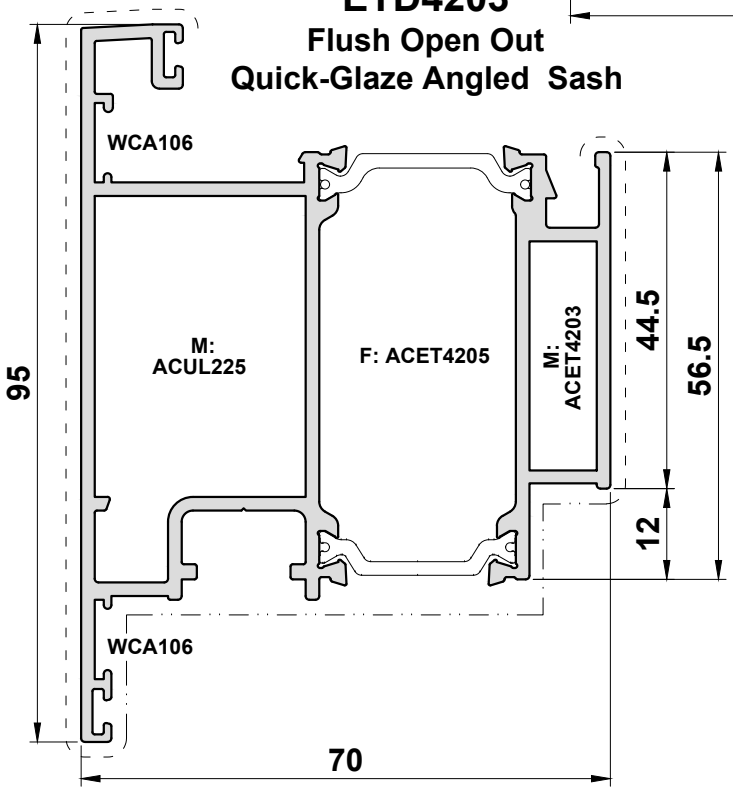

Scale 1:1

Primary Visible Side - - - - - - - - - - - - - - - - - - Secondary Visible Side — · — · — · — · — · — · — · —

ETD422
Flush Open In
Flat Sash

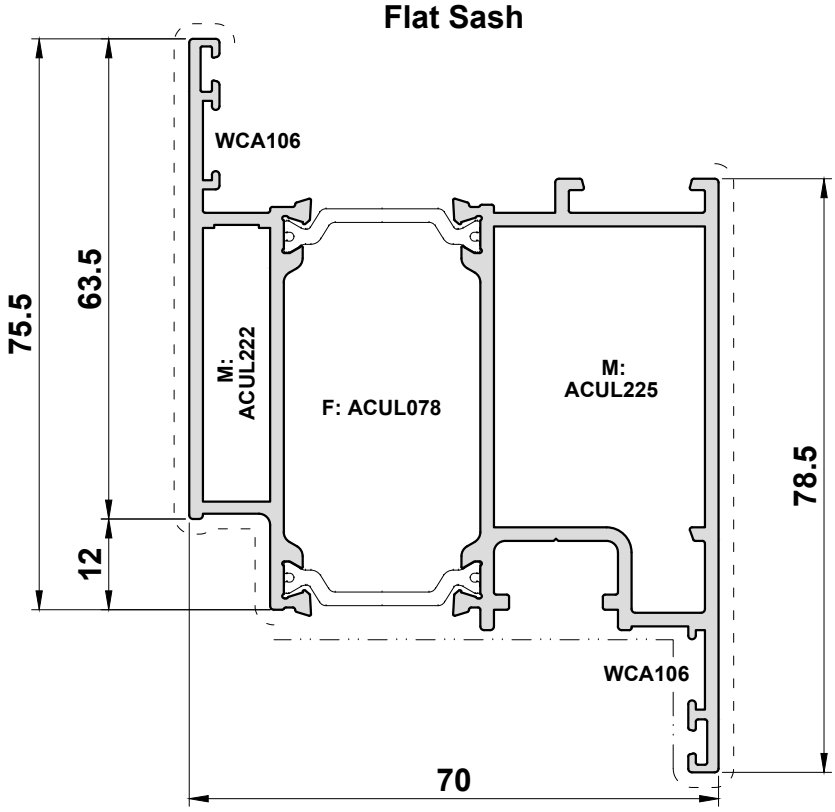

UN079
(VL72)
Weather Drip

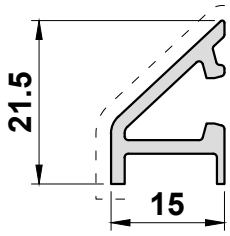

End Cap: ACVL059
Rivet: ACVL061

PCX47
PVC Infill

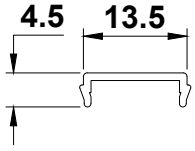

Scale 1:1

Primary Visible Side – – – – – – – – – – – – – – – – **Secondary Visible Side** — · · — · · — · · — · · —

ETD491
Flush Open In Low Threshold

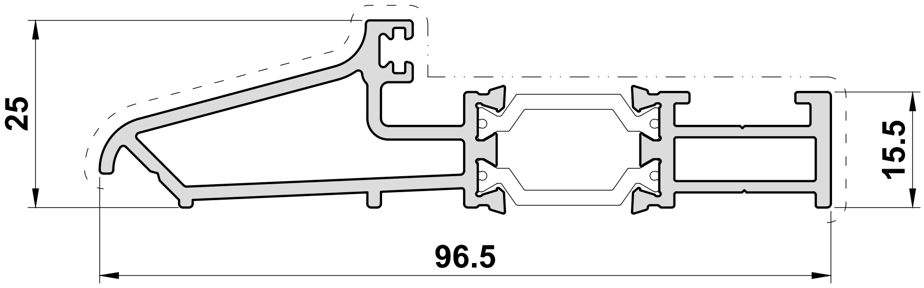

End Cap: ACET4191

ETD493
Flush Open Out Low Threshold

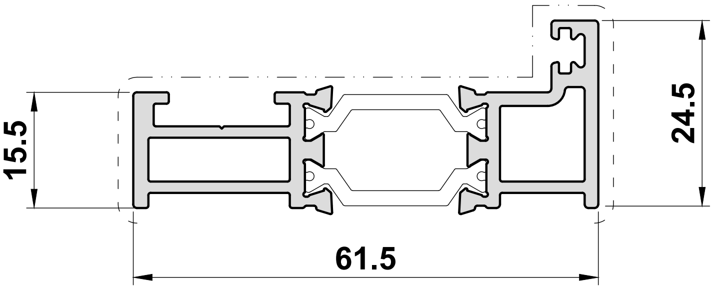

End Cap: ACET4193

UL294
Low Threshold Adaptor

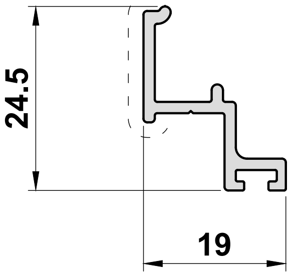

End Cap: ACET4194

Scale 1:1

Primary Visible Side - - - - - - - - - - - - - - - - Secondary Visible Side — · · — · · — · · — · · — · · — · · —

ETD499

Flush Ramp Threshold Adaptor

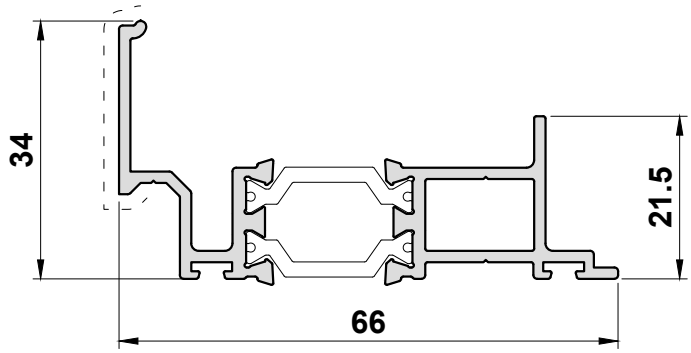

End Cap: ACET4199

ETD497

Flush Ramp Threshold

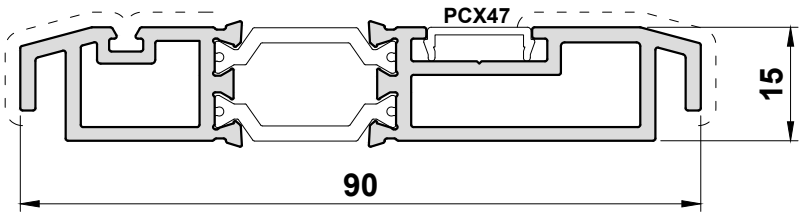

End Cap: ACET4198

EUD03

Ramp

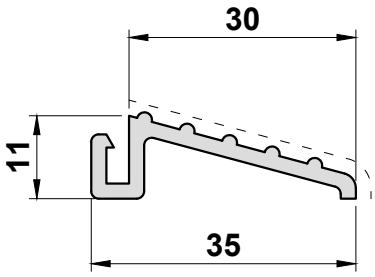

Scale 1:1

Primary Visible Side - - - - - - - - - - - - - - - - - - Secondary Visible Side — · — · — · — · — · — · — · —

ETD445
Flush Double Door Meeting Stile

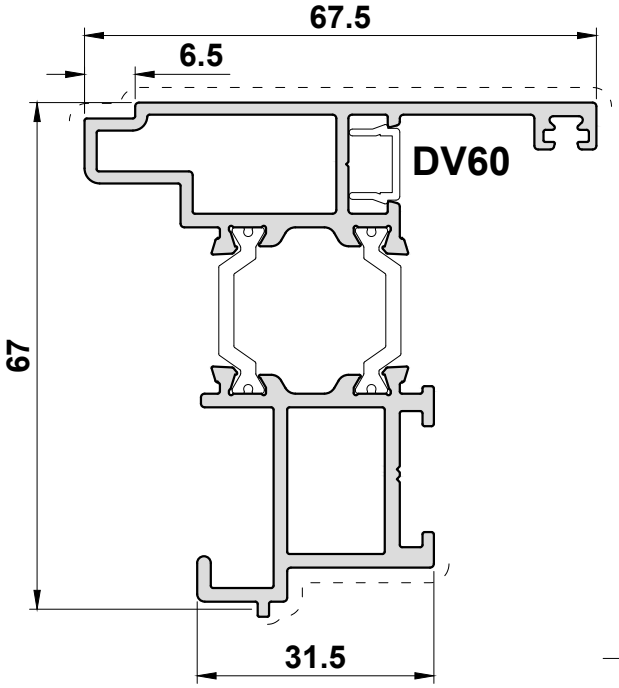

End Cap: ACET4152
ACET4155 /
ACET4157

ETD446
Flush Double Door Meeting Stile

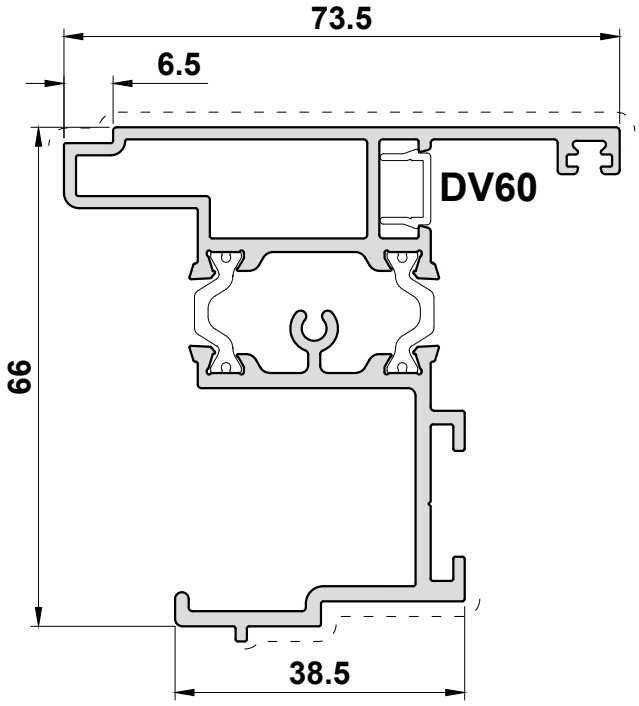

End Cap: ACET4153
ACET4156 /
ACET4158

DV60
PVC Infill Strip
Black Only

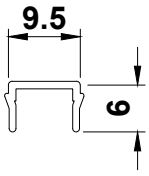

Scale 1:1

Primary Visible Side - - - - - - - - - - - - - - - - - - Secondary Visible Side — · · — · · — · · — · · — · · — · · —

ETD4301
Open In
Quick-Glaze Angled Midrail

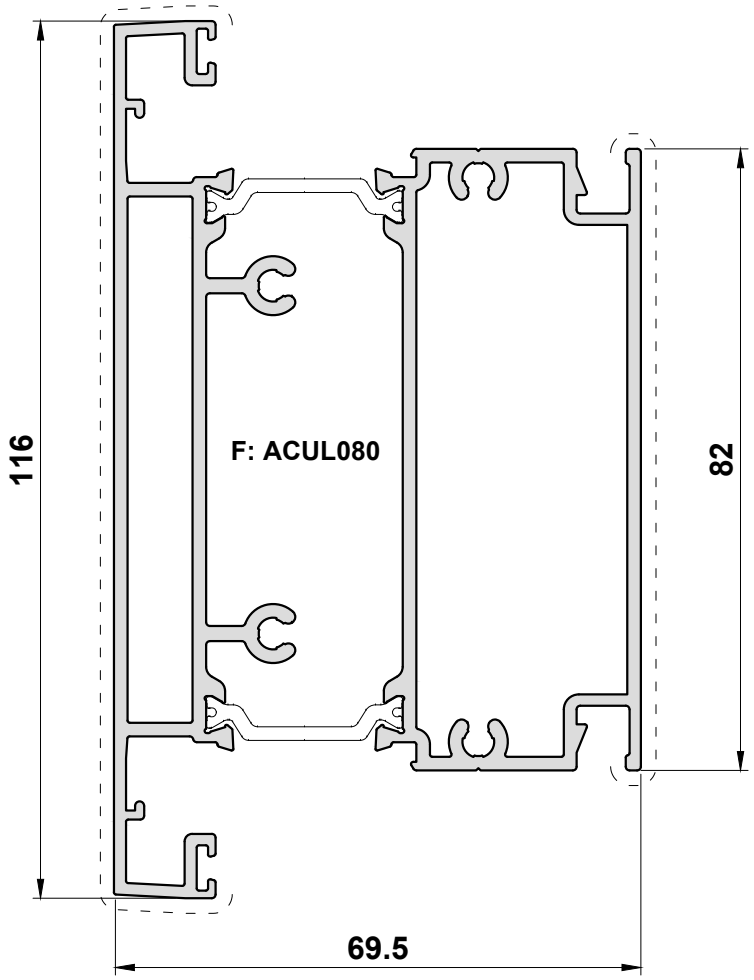

Scale 1:1

Primary Visible Side - - - - - - - - - - - - - - - - - - Secondary Visible Side — · · — · · — · · — · · — · · — · · —

ETD4302

Open Out

Quick-Glaze Angled Midrail

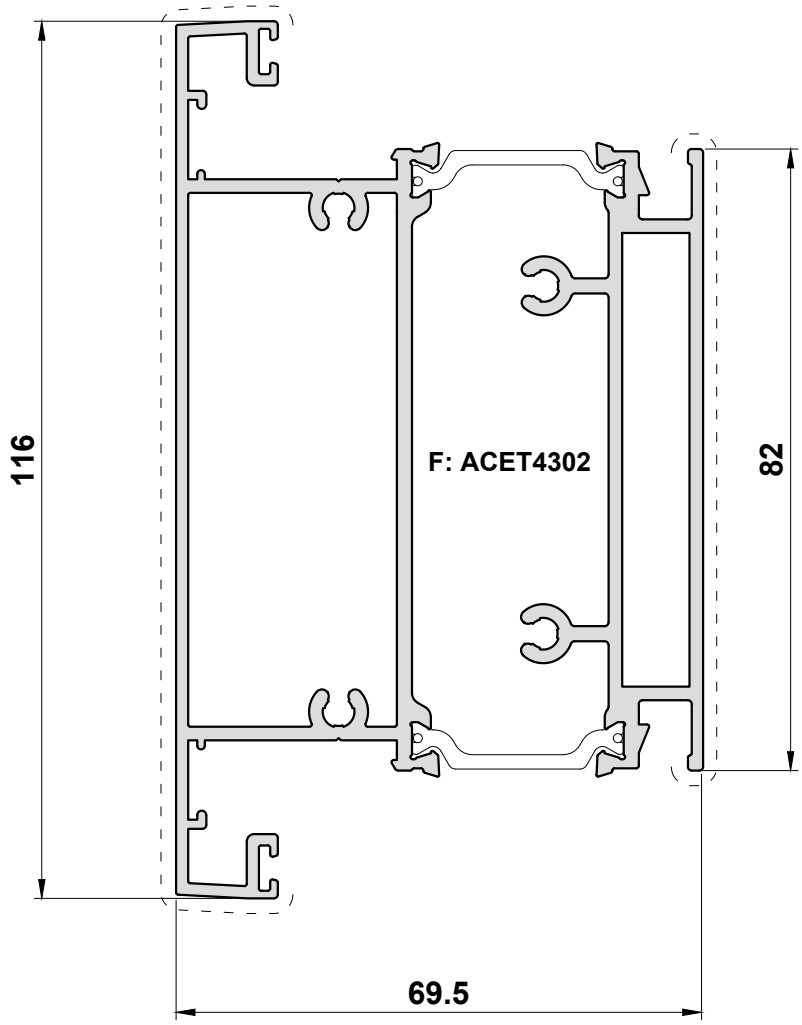

Scale 1:1

Alitherm 400 Flush Door

Primary Visible Side – – – – – – – – – – – – – – – – –   **Secondary Visible Side** — · · — · · — · · — · · — · · —

ETD430

Flat Midrail

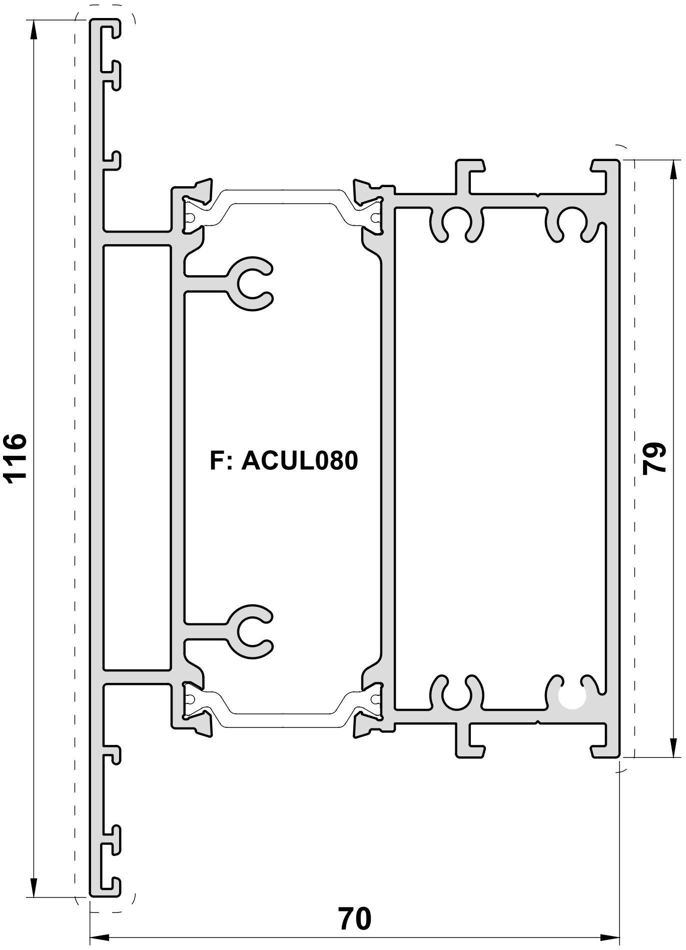

Scale 1:1

ISSUED: JULY 2024

Primary Visible Side - - - - - - - - - - - - - - - - - - Secondary Visible Side — · · — · · — · · — · · — · · — · · — · · —

ETD433

Door Transom

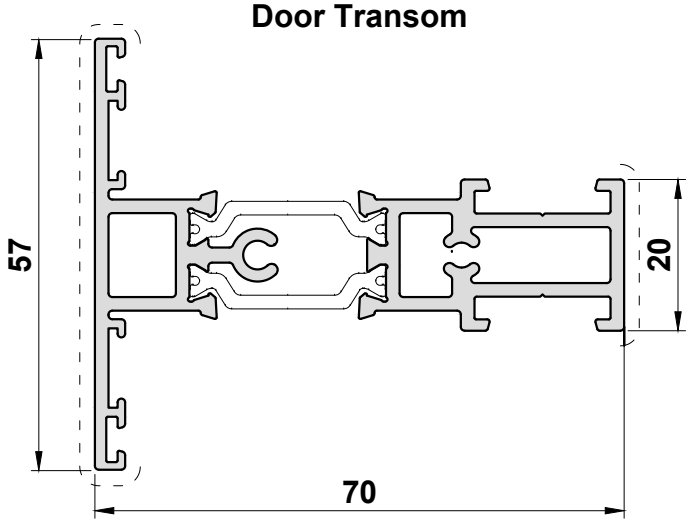

Scale 1:1

Primary Visible Side - - - - - - - - - - - - - - - - - - Secondary Visible Side — · — · — · — · — · — · — · —

UN3160
28mm Square Bead

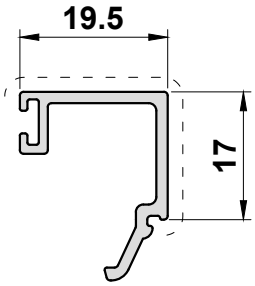

UN3160G
28mm Square Bead with Gasket

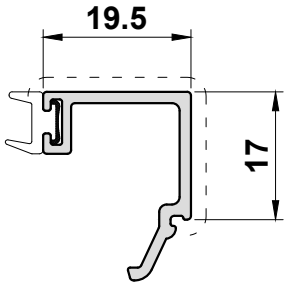

UN3162N
23.5mm Bead

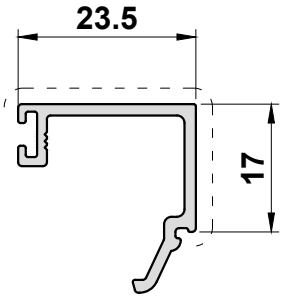

UN3162NG
23.5mm Bead with Gasket

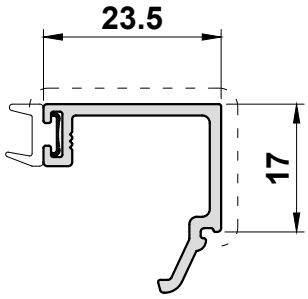

ETC4179
11.5mm Bead

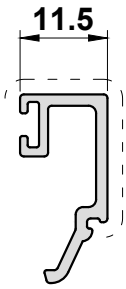

ETC4179G
11.5mm Bead with Gasket

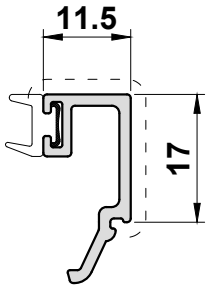

Scale 1:1

Primary Visible Side - - - - - - - - - - - - - - - - - - Secondary Visible Side — · — · — · — · — · — · — · —

UN3164
15mm Bead

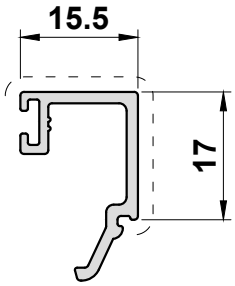

UN3166
8.5mm Bead

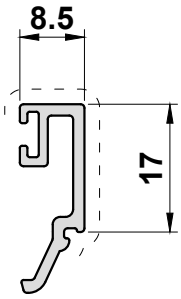

UN3168
3.5mm Bead

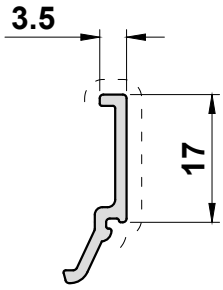

Scale 1:1

Primary Visible Side - - - - - - - - - - - - - - - - - - Secondary Visible Side — · · — · · — · · — · · — · · — · · —

UL062
Glazing Bead

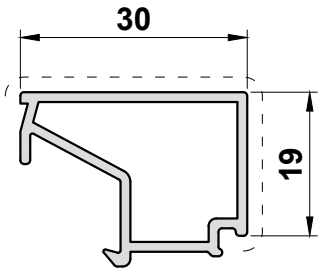

UL067
Glazing Bead

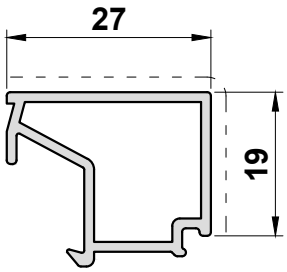

UL068
Glazing Bead

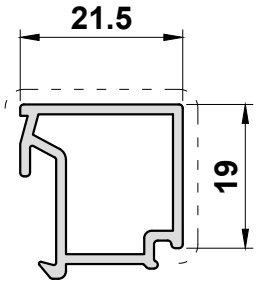

UL069
Glazing Bead

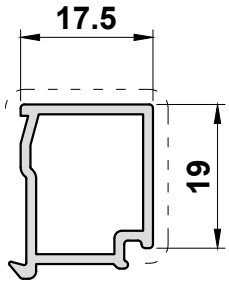

UL078
Glazing Bead

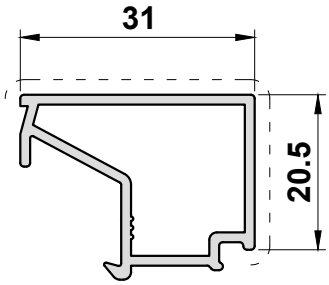

UL079
Glazing Bead

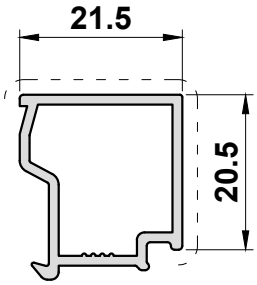

Scale 1:1

Primary Visible Side - - - - - - - - - - - - - - - - - - Secondary Visible Side — · — · — · — · — · — · — · —

UN3015
70mm x 15mm Coupler

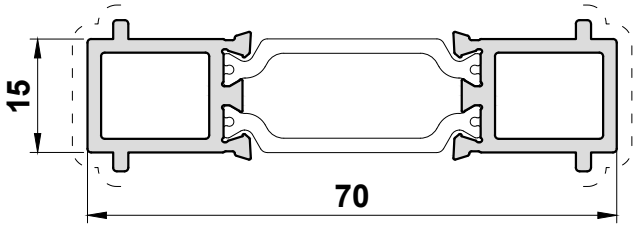

UN3020
70mm x 20mm Frame Extension

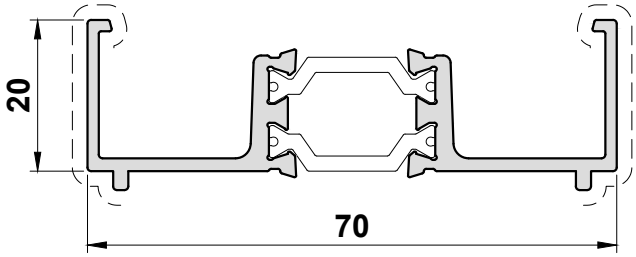

UN3042
42 x 70mm Head Extension

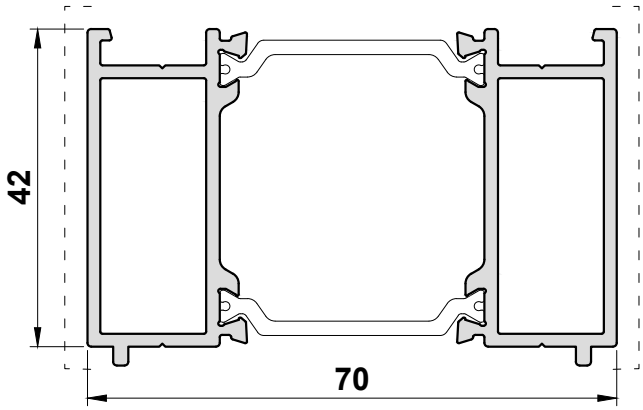

Scale 1:1

Primary Visible Side - - - - - - - - - - - - - - - - - - Secondary Visible Side — · · — · · — · · — · · — · · — · · —

UN3370

30 x 70mm Head Extension

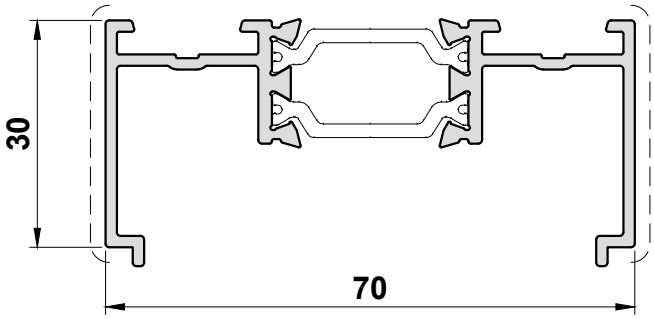

UN3010

90° Corner Post

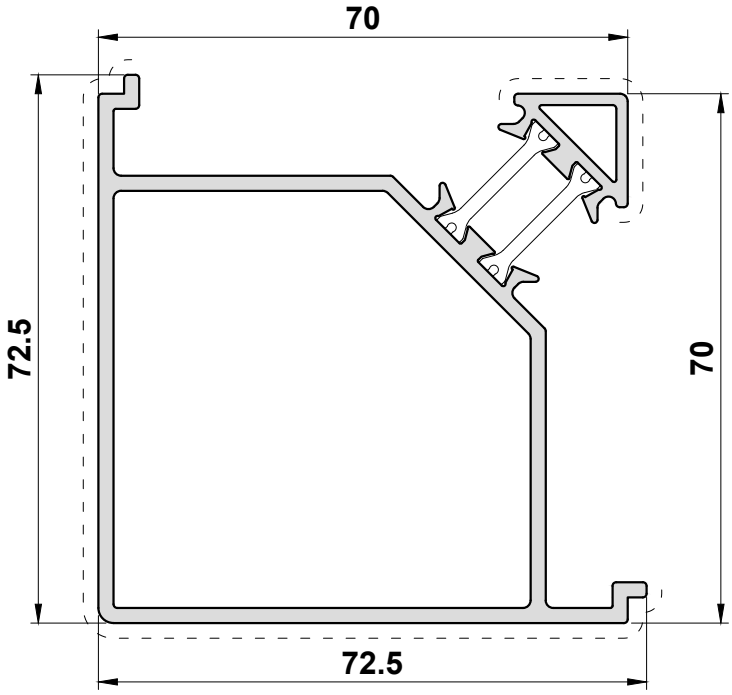

Scale 1:1

Primary Visible Side - - - - - - - - - - - - - - - - - - Secondary Visible Side — · · — · · — · · — · · — · · — · · —

SR014
Cover Cap for UN514

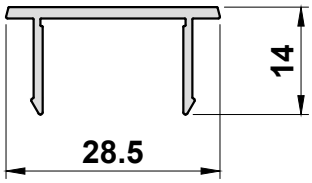

UN514
Re-Inforcement for ETD455

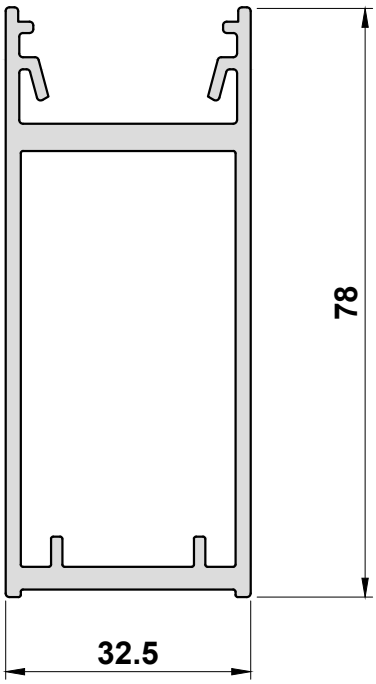

Scale 1:1

Primary Visible Side - - - - - - - - - - - - - - - - - - Secondary Visible Side — · · — · · — · · — · · — · · — · · —

UN3570

70mm x 42mm Hooded Head Extension

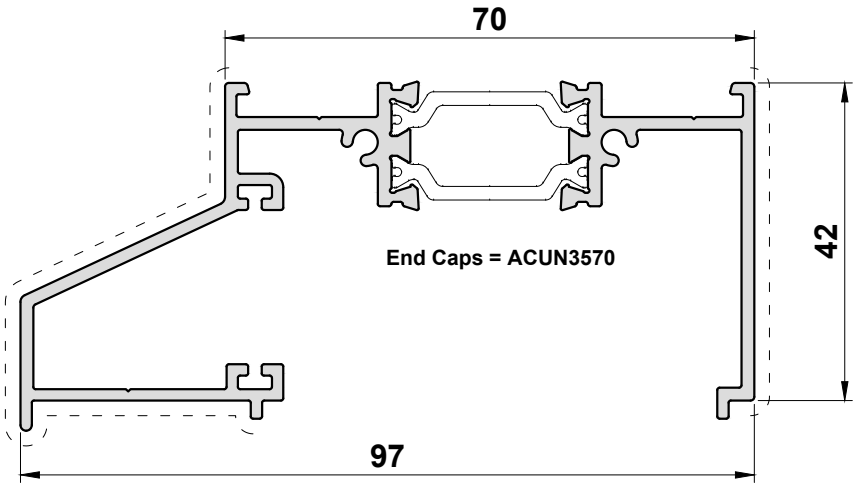

Scale 1:1

Primary Visible Side – – – – – – – – – – – – – – – – – **Secondary Visible Side** — · — · — · — · — · — · —

ETC451

85mm Cill

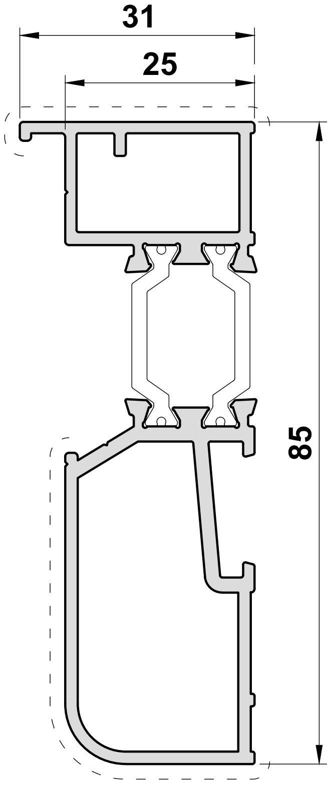

Cast End Cap: ACET451
PVC End Cap: ACET178

ETC452

135mm Cill

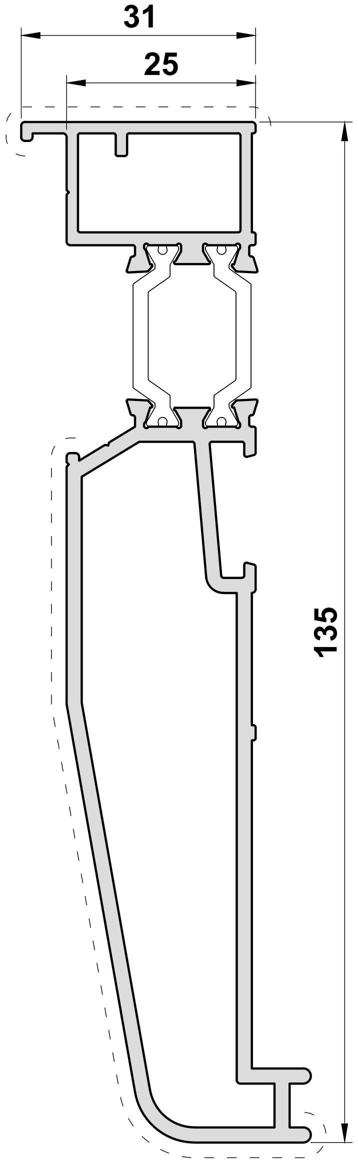

Cast End Cap: ACET452
PVC End Cap: ACET152

ETC457

150mm Cill

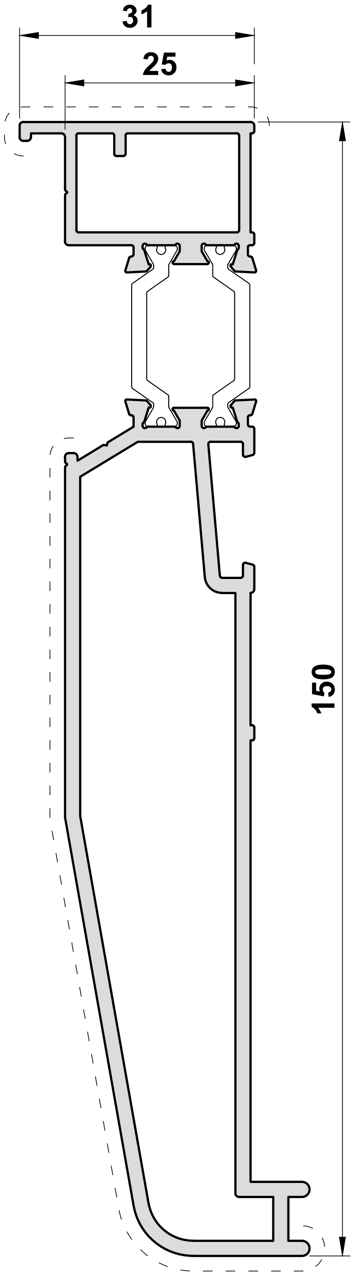

Cast End Cap: ACET457
PVC End Cap: ACET157

Scale 1:1

Alitherm 400 Flush Door

PROFILE : SCALED PROFILE DRAWINGS

Primary Visible Side - - - - - - - - - - - - - - - - - - Secondary Visible Side — · — · — · — · — · — · —

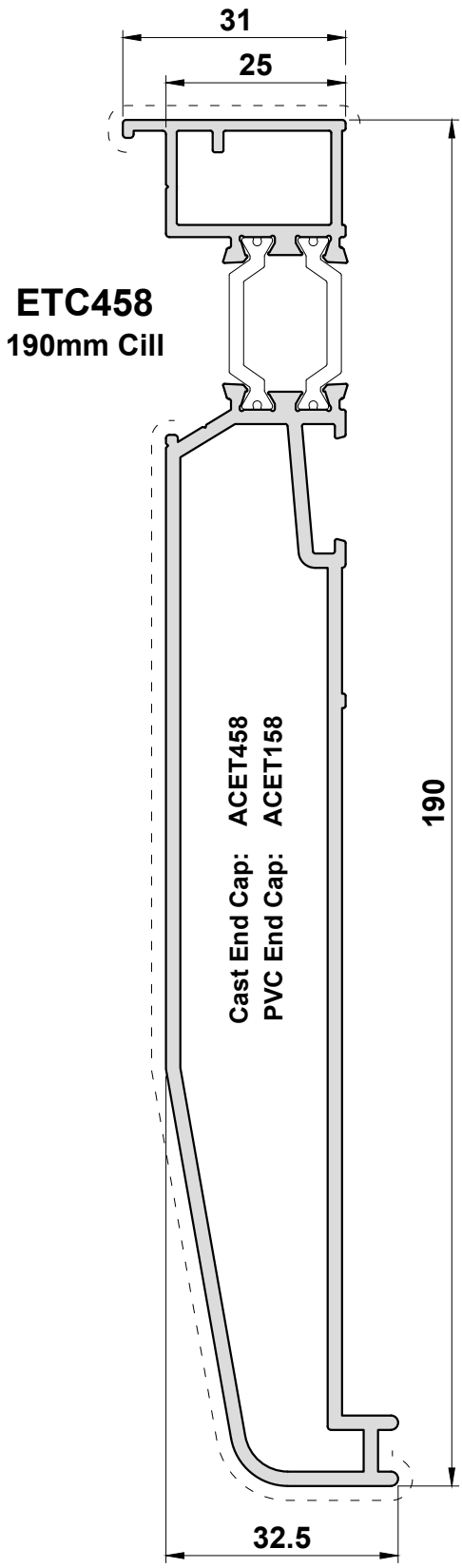

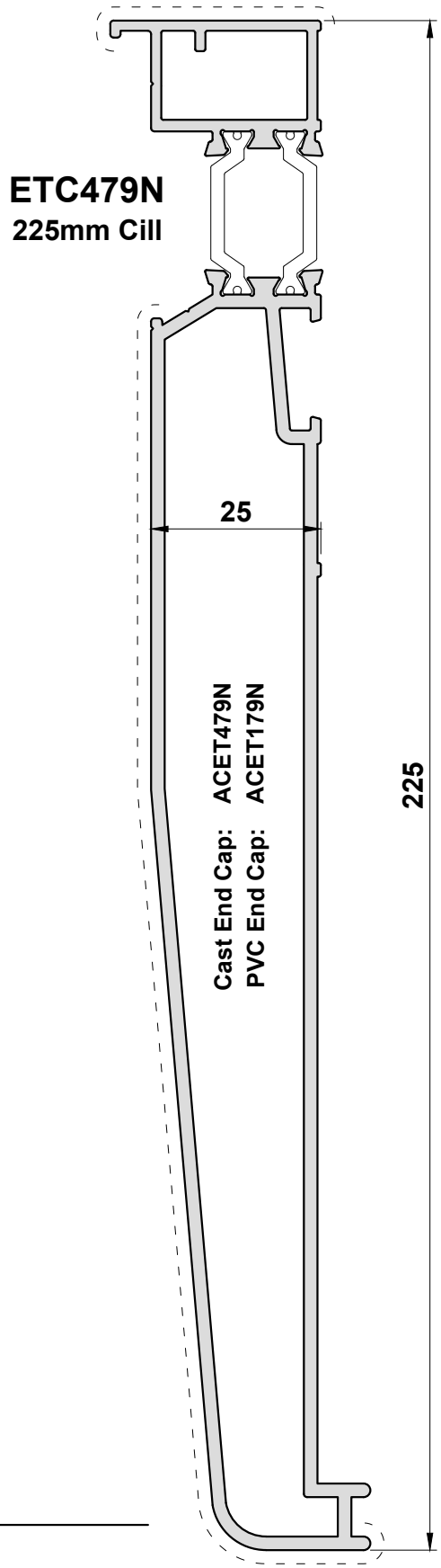

Scale 1:1

ISSUED: JULY 2024

Section B

Accessories

Photos & Drawings

Countersunk Screws

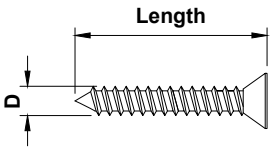

Gauge	'D' (mm)
No.6	3.5
No.7	3.8
No.8	4
No.10	5
No.12	6

Part Number	Gauge	X	Length	Description	Box Qty.
ACUN3530	No.6	X	5/8"	Countersunk Pozi Self Tapper S/S	100
MUA025SSZ	No.6	X	1"	Countersunk Pozi Self Tapper S/S	100
ACET067	No.7	X	1/2"	Countersunk Pozi Self Tapper S/S	100
ACET060	No.7	X	1"	Countersunk Pozi Self Tapper S/S	100
ACET066	No.7	X	1 1/2"	Countersunk Pozi Self Tapper S/S	100
MUA067SSZ	No.7	X	2"	Countersunk Pozi Self Tapper S/S	100
ACPD815	No.7	X	3/4"	Countersunk Pozi Self Tapper S/S	100
ACET064	No.8	X	5/8"	Countersunk Pozi Self Tapper S/S	100
ACUN3512	No.8	X	1 1/4"	Countersunk Pozi Self Tapper S/S	100
ACUN3513	No.8	X	1 3/4"	Countersunk Pozi Self Tapper S/S	100
ACET072	No.8	X	2 1/2"	Countersunk Pozi Self Tapper S/S	100
ACET490	4.3mm	X	16mm	Countersunk PH2 Polyamide Screw	1000
ACET290	4.3mm	X	20mm	Countersunk PH2 Polyamide Screw	100
ACET390	4.3mm	X	25mm	Countersunk PH2 Polyamide Screw	200
ACET190	4.3mm	X	45mm	Countersunk PH2 Polyamide Screw	1000
ACVS062	4.3mm	X	65mm	Countersunk PH2 Polyamide Screw	1000
ACET048	No.10	X	3/8"	Countersunk Pozi Self Tapper S/S	100
ACIM062	No.10	X	1 1/4"	Countersunk Pozi Self Tapper S/S	100
ACET062	No.10	X	2"	Countersunk Pozi Self Tapper S/S	100
ACET076	No.10	X	2 1/2"	Countersunk Pozi Self Tapper S/S	100

T-BARS
ACVG65=2.5mm
ACVG66=3.0mm
ACVL150=4.0mm

Screw (Grub)

MF	= Mill Finish	WP	= White
SA	= Silver Anodised	BL	= Black
KL	= Basic Colour		
HP	= Special Colour		
SSC	= Smooth Satin Chrome		
SMC	= Smokey Chrome		
PC	= Polished Chrome		

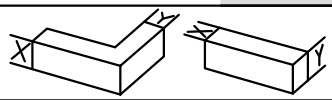

Pan Head Screws

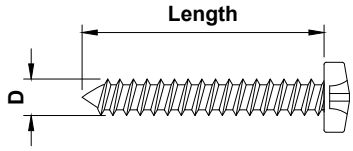

Gauge	'D' (mm)
No.6	3.5
No.7	3.8
No.8	4
No.10	5
No.12	6

Part Number	Gauge	X	Length	Description	Box Qty.
ACET068	No.8	X	3/8"	Pozi Flange AB	100
ACET063	No.8	X	1/2"	Pan Head Self Tapper	100
ACET070	No.8	X	1/2"	Pozi Flange Self Tapper S/S	100
ACUN3535	No.8	X	5/8"	Pan Head Pozi S/S	100
ACET099	No.8	X	3/4"	Pozi Flange Self Tapper S/S	100
ACDR050	4.8mm	X	32mm	Pan Head Pozi S/S	200
PUA028	No.10	X	1"	Pan Head Pozi S/S	100
ACDR052	No.10	X	2"	Pan Head Self Tapper S/S	200
ACET079	No.10	X	2 1/2"	Pan Head Pozi S/S	100
ACW20160	No.12	X	1"	Flange Head Self Tapper S/S	100
ACMC109	6.3mm	X	38mm	DIN7981 - Pan Head Self Tapper	200

T-BARS
ACVG65=2.5mm
ACVG66=3.0mm
ACVL150=4.0mm

Screw (Grub)

MF = Mill Finish
SA = Silver Anodised
KL = Basic Colour
HP = Special Colour
SSC = Smooth Satin Chrome
SMC = Smokey Chrome
PC = Polished Chrome
WP = White
BL = Black

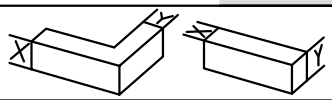

Countersunk Machine Screws

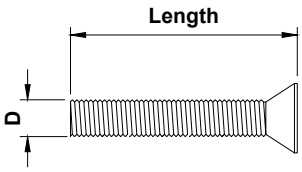

Thread	'D' (mm) Nominal
M4	4
M5	5
M6	6
M8	8
M10	10

Part Number	Thread	X	Length	Description	Box Qty.
ACET122	M4	X	10	CSK Pozi Machine Screw	100
ACET123	M4	X	20	CSK Pozi Machine Screw	100
ACDV264	M4	X	35	CSK Pozi Machine Screw	100
ACSG071	M4	X	40	CSK Pozi Machine Screw	100
ACDV266	M4	X	45	CSK Pozi Machine Screw	100
ACDV262	M4	X	50	CSK Pozi Machine Screw	100
ACDV265	M4	X	60	CSK Pozi Machine Screw	100
ACDR051	M5	X	10	CSK Pozi Machine Screw	100
ACET069	M5	X	12	CSK Pozi Machine Screw	100
HEA132	M5	X	16	CSK Pozi Machine Screw	100
WCA134	M5	X	20	CSK Pozi Machine Screw	100
WCA143	M5	X	25	CSK Pozi Machine Screw	50
ACVS061	M5	X	40	CSK Pozi Machine Screw	100
ACET133	M5	X	50	CSK Pozi Machine Screw	100
ACET220	M5	X	60	CSK Pozi Machine Screw	100
ACET238	M5	X	70	CSK Pozi Machine Screw	100
ACMX861	M5	X	80	DIN965 - CSK Machine Screw	10
ACMX862	M5	X	90	DIN965 - CSK Machine Screw	10
ACUN3503	M6	X	10	CSK Socket Machine Screw	24
ACUN3501	M6	X	13	CSK Flange Socket Machine Screw	48
ACMX852	M6	X	16	DIN965 - CSK Machine Screw	10
HEA390	M6	X	16	CSK Socket Machine Screw	32
ACET235	M6	X	60	CSK Pozi Machine Screw	100
ACET237	M6	X	70	CSK Pozi Machine Screw	100

T-BARS
ACVG65=2.5mm
ACVG66=3.0mm
ACVL150=4.0mm

Screw (Grub)

MF = Mill Finish
SA = Silver Anodised
KL = Basic Colour
HP = Special Colour
SSC = Smooth Satin Chrome
SMC = Smokey Chrome
PC = Polished Chrome
WP = White
BL = Black

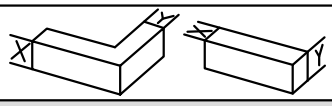

Image	Part Code	Pack	Unit	Application	Colour
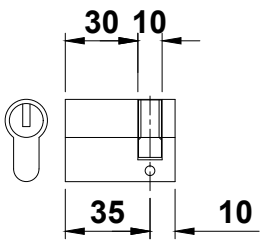	**ACCY0035** 35mm Euro Profile Half Cylinder	1	Each		MF ✓ SA KL HP SSC SMC WP BL PC
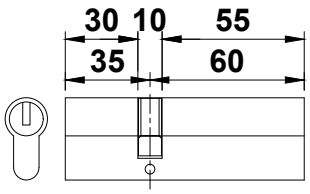	**ACCY3560NKS3** 35/60 TS007 3 Star Euro Profile Cylinder Supplied with 3 Keys	1	Each	Open Out	MF ✓ SA KL HP SSC SMC WP BL PC
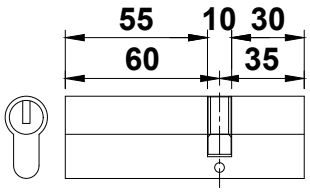	**ACCY6035NKS3** 35/60 TS007 3 Star Euro Profile Cylinder Supplied with 3 Keys	1	Each	Open In	MF ✓ SA KL HP SSC SMC WP BL PC
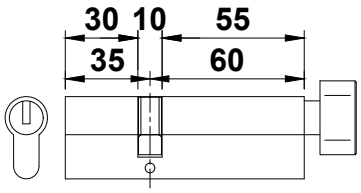	**ACCY3560NKTTS3** 35/60 TS007 3 Star Euro Profile Cylinder Supplied with 3 Keys	1	Each	Open Out	MF ✓ SA KL HP SSC SMC WP BL PC
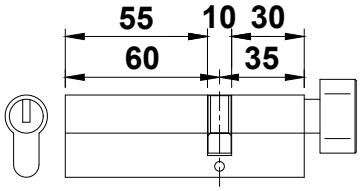	**ACCY6035NKTTS3** 60/35 TS007 3 Star Euro Profile Cylinder Supplied with 3 Keys	1	Each	Open In	MF ✓ SA KL HP SSC SMC WP BL PC

T-BARS
ACVG65=2.5mm
ACVG66=3.0mm
ACVL150=4.0mm

Screw (Grub)

MF = Mill Finish
SA = Silver Anodised
KL = Basic Colour
HP = Special Colour
SSC = Smooth Satin Chrome
SMC = Smokey Chrome
PC = Polished Chrome
WP = White
BL = Black

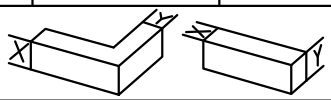

Alitherm 400 Flush Door

ACCESSORIES : PHOTOS & DRAWINGS

Image	Part Code	Pack	Unit	Application	Colour	
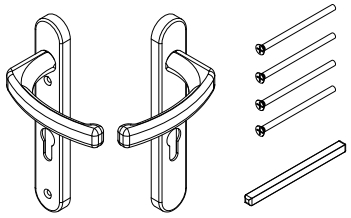	**ACDV251** **Lever/Lever Handle**	1	pair		MF	
					SA	
					KL	✓
					HP	✓
					SSC	
					SMC	
					WP	✓
					BL	✓
					PC	✓
	**ACDV737** **Bottom Shoot Bolt**	1	Each	**ACUL276** **ACUL277** **ACUL278**	MF	✓
					SA	
					KL	
					HP	
					SSC	
					SMC	
					WP	
					BL	
					PC	
	**ACDV738** **Top Shoot Bolt**	1	Each	**ACUL276** **ACUL277** **ACUL278**	MF	✓
					SA	
					KL	
					HP	
					SSC	
					SMC	
					WP	
					BL	
					PC	
	**ACDV742** **200mm Extension for ACDV738**	1	Each	**ACUL276** **ACUL277** **ACUL278** **ACDV737** **ACDV738**	MF	✓
					SA	
					KL	
					HP	
					SSC	
					SMC	
					WP	
					BL	
					PC	
	**ACDV744** **400mm Extension for ACDV738**	1	Each	**ACUL276** **ACUL277** **ACUL278** **ACDV737** **ACDV738**	MF	✓
					SA	
					KL	
					HP	
					SSC	
					SMC	
					WP	
					BL	
					PC	

T-BARS
ACVG65=2.5mm
ACVG66=3.0mm
ACVL150=4.0mm

Screw (Grub)

MF = Mill Finish
SA = Silver Anodised
KL = Basic Colour
HP = Special Colour
SSC = Smooth Satin Chrome
SMC = Smokey Chrome
PC = Polished Chrome
WP = White
BL = Black

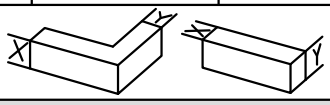

Alitherm 400 Flush Door

ACCESSORIES : PHOTOS & DRAWINGS

Image	Part Code	Pack	Unit	Application	Colour	
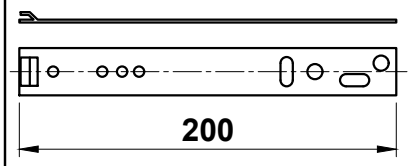	**ACET130** Galvanised Steel Fixing Strap 200mm x 25mm x 1.5mm	100	pack	ETD410 ETD412	MF	✓
					SA	
					KL	
					HP	
					SSC	
					SMC	
					WP	
					BL	
					PC	
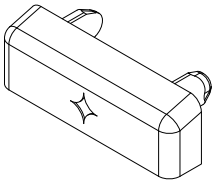	**ACET131** PVC Drainage Cap For Colour match Drainage caps use - ACET432	100	pack		MF	
					SA	
					KL	
					HP	
					SSC	
					SMC	
					WP	✓
					BL	✓
					PC	
	**ACET149** Slimline Restrictor	1	each		MF	✓
					SA	
					KL	
					HP	
					SSC	
					SMC	
					WP	
					BL	
					PC	
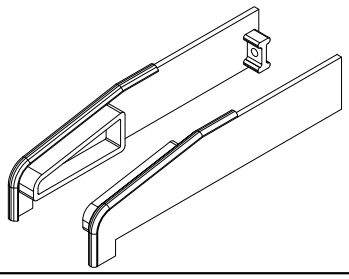	**ACET152** PVC Cill End Caps	10	pair	ETC452	MF	
					SA	
					KL	
					HP	
					SSC	
					SMC	
					WP	✓
					BL	✓
					PC	
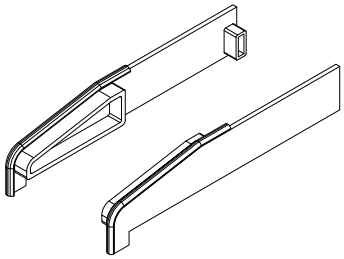	**ACET157** PVC Cill End Caps	10	pair	ETC457	MF	
					SA	
					KL	
					HP	
					SSC	
					SMC	
					WP	✓
					BL	✓
					PC	

T-BARS
ACVG65=2.5mm
ACVG66=3.0mm
ACVL150=4.0mm

Screw (Grub)

MF	= Mill Finish	W	= White
SA	= Silver Anodised	Z	= Black
KL	= Basic Colour		
HP	= Special Colour		
SSC	= Smooth Satin Chrome		
SMC	= Smokey Chrome		
PC	= Polished Chrome		

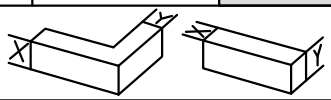

ISSUED: JULY 2024

Alitherm 400 Flush Door

ACCESSORIES : PHOTOS & DRAWINGS

Image	Part Code	Pack	Unit	Application	Colour	
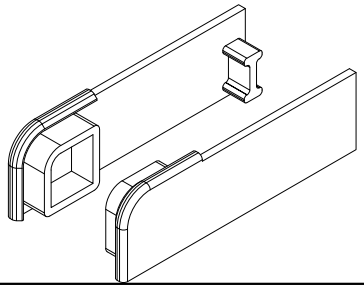	**ACET178** **PVC Cill End Caps**	**10**	**pair**	**ETC451**	MF	
					SA	
					KL	
					HP	
					SSC	
					SMC	
					WP	✓
					BL	✓
					PC	
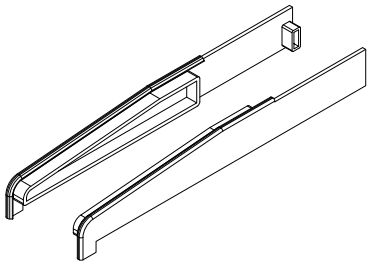	**ACET179** **PVC Cill End Caps**	**10**	**pair**	**ETC479**	MF	
					SA	
					KL	
					HP	
					SSC	
					SMC	
					WP	✓
					BL	✓
					PC	
	**ACET252** **Hinge Protector Kit**	**1**	**kit**		MF	✓
					SA	
					KL	
					HP	
					SSC	
					SMC	
					WP	
					BL	
					PC	
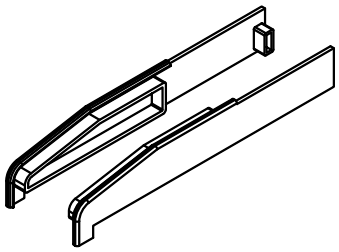	**ACET258** **PVC Cill End Cap**	**10**	**pair**	**ETC458**	MF	
					SA	
					KL	
					HP	
					SSC	
					SMC	
					WP	✓
					BL	✓
					PC	
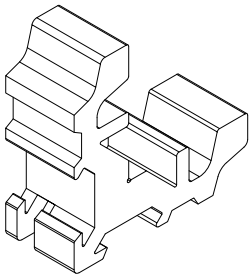	**ACET402** **Mechanical Cleat**	**24**	**pack**	**ETD402**	MF	✓
					SA	
					KL	
					HP	
					SSC	
					SMC	
					WP	
					BL	
					PC	

T-BARS
ACVG65=2.5mm
ACVG66=3.0mm
ACVL150=4.0mm

Screw (Grub)

MF = Mill Finish
SA = Silver Anodised
KL = Basic Colour
HP = Special Colour
SSC = Smooth Satin Chrome
SMC = Smokey Chrome
PC = Polished Chrome
W = White
Z = Black

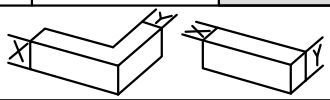

Image	Part Code	Pack	Unit	Application	Colour	
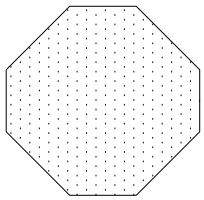	**ACET408** **Infill Foam**	**1**	**each**	**ETD402**	MF	
					SA	
					KL	
					HP	
					SSC	
					SMC	
					WP	
					BL	✓
					PC	
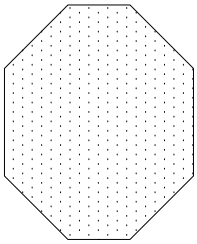	**ACET412** **Infill Foam**	**1**	**each**	**ETD412**	MF	
					SA	
					KL	
					HP	
					SSC	
					SMC	
					WP	
					BL	✓
					PC	
	**ACET4133** **Bridge Packer**	**10**	**pack**	**ETD432**	MF	
					SA	
					KL	
					HP	
					SSC	
					SMC	
					WP	
					BL	✓
					PC	
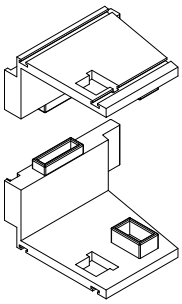	**ACET4152** **Flush Low Ramp Threshold End Cap**	**1**	**kit**	**ETD445** **ETD497** **ETD499**	MF	
					SA	
					KL	
					HP	
					SSC	
					SMC	
					WP	✓
					BL	✓
					PC	
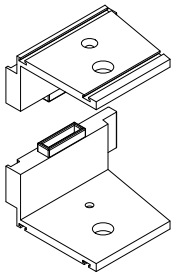	**ACET4153** **Flush Low Ramp Threshold End Cap**	**1**	**kit**	**ETD446** **ETD497** **ETD499**	MF	
					SA	
					KL	
					HP	
					SSC	
					SMC	
					WP	✓
					BL	✓
					PC	

T-BARS
ACVG65=2.5mm
ACVG66=3.0mm
ACVL150=4.0mm

Screw (Grub)

MF = Mill Finish
SA = Silver Anodised
KL = Basic Colour
HP = Special Colour
SSC = Smooth Satin Chrome
SMC = Smokey Chrome
PC = Polished Chrome
W = White
Z = Black

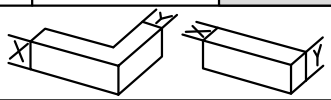

Alitherm 400 Flush Door

ACCESSORIES : PHOTOS & DRAWINGS

Image	Part Code	Pack	Unit	Application	Colour	
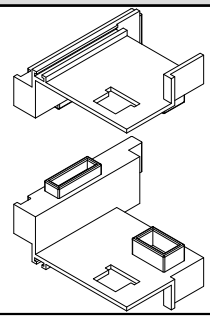	**ACET4155** **Flush Low Rebate Threshold End Cap**	**1**	**kit**	**ETD445 ETD493 UL294**	MF	
					SA	
					KL	
					HP	
					SSC	
					SMC	
					WP	✓
					BL	✓
					PC	
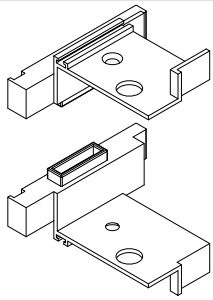	**ACET4156** **Flush Low Rebate Threshold End Cap**	**1**	**kit**	**ETD446 ETD493 UL294**	MF	
					SA	
					KL	
					HP	
					SSC	
					SMC	
					WP	✓
					BL	✓
					PC	
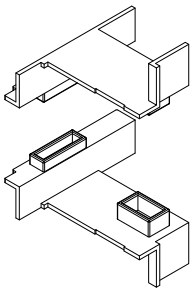	**ACET4157** **End Cap**	**10**	**pairs**	**ETD412 ETD446**	MF	
					SA	
					KL	
					HP	
					SSC	
					SMC	
					WP	✓
					BL	✓
					PC	
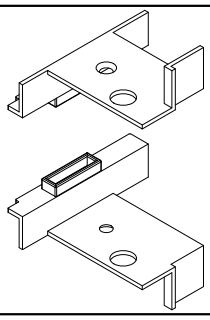	**ACET4158** **End Cap**	**10**	**pairs**	**ETD412 ETD445**	MF	
					SA	
					KL	
					HP	
					SSC	
					SMC	
					WP	✓
					BL	✓
					PC	
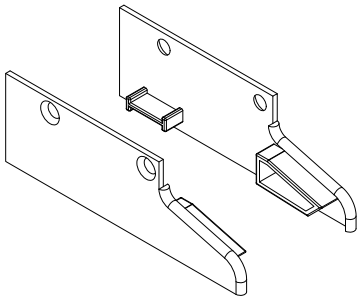	**ACET4191** **End Cap**	**1**	**pair**	**ETD412 ETD491**	MF	✓
					SA	
					KL	✓
					HP	✓
					SSC	
					SMC	
					WP	✓
					BL	✓
					PC	

T-BARS
ACVG65=2.5mm
ACVG66=3.0mm
ACVL150=4.0mm

Screw (Grub)

MF = Mill Finish
SA = Silver Anodised
KL = Basic Colour
HP = Special Colour
SSC = Smooth Satin Chrome
SMC = Smokey Chrome
PC = Polished Chrome
WP = White
BL = Black

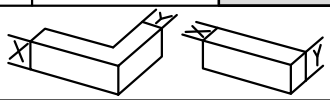

Alitherm 400 Flush Door

ACCESSORIES : PHOTOS & DRAWINGS

Image	Part Code	Pack	Unit	Application	Colour	
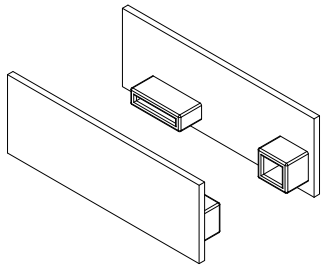	**ACET4193** **End Cap**	**10**	**pairs**	**ETD412** **ETD493**	MF	
					SA	
					KL	
					HP	
					SSC	
					SMC	
					WP	✓
					BL	✓
					PC	
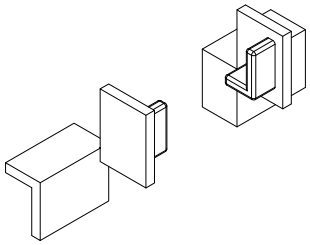	**ACET4194** **End Cap**	**1**	**pair**	**UL294**	MF	
					SA	
					KL	
					HP	
					SSC	
					SMC	
					WP	✓
					BL	✓
					PC	
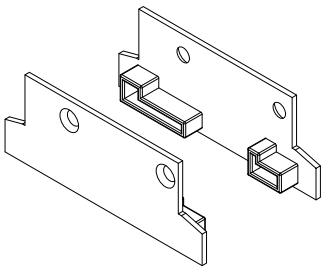	**ACET4198** **End Cap**	**1**	**pair**	**ETD412** **ETD497**	MF	✓
					SA	
					KL	✓
					HP	✓
					SSC	
					SMC	
					WP	✓
					BL	✓
					PC	
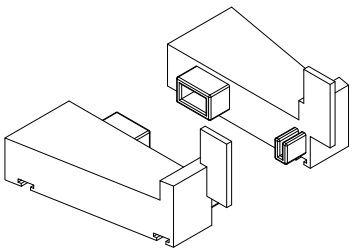	**ACET4199** **End Cap**	**1**	**pair**	**ETD499**	MF	
					SA	
					KL	
					HP	
					SSC	
					SMC	
					WP	✓
					BL	✓
					PC	
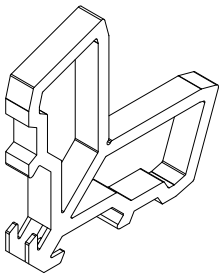	**ACET4203** **Mechanical Cleat**	**24**	**pack**	**ETD4203**	MF	✓
					SA	
					KL	
					HP	
					SSC	
					SMC	
					WP	
					BL	
					PC	

T-BARS
ACVG65=2.5mm
ACVG66=3.0mm
ACVL150=4.0mm

Screw (Grub)

MF = Mill Finish
SA = Silver Anodised
KL = Basic Colour
HP = Special Colour
SSC = Smooth Satin Chrome
SMC = Smokey Chrome
PC = Polished Chrome
WP = White
BL = Black

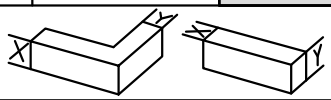

ISSUED: JULY 2024

Alitherm 400 Flush Door

ACCESSORIES : PHOTOS & DRAWINGS

Image	Part Code	Pack	Unit	Application	Colour	
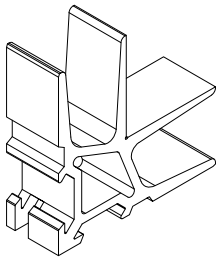	**ACET4204** **Mechanical Cleat**	**24**	**pack**	**ETD4202**	MF	✓
					SA	
					KL	
					HP	
					SSC	
					SMC	
					WP	
					BL	
					PC	
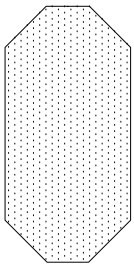	**ACET4205** **Infill Foam**	**1**	**each**	**ETD4203**	MF	
					SA	
					KL	
					HP	
					SSC	
					SMC	
					WP	
					BL	✓
					PC	
	**ACET4206** **Bridge Packer**	**10**	**pack**	**ETD402** **ETD4202** **ETD4301**	MF	
					SA	
					KL	
					HP	
					SSC	
					SMC	
					WP	
					BL	✓
					PC	
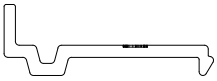	**ACET4207** **Bridge Packer**	**10**	**pack**	**ETD4203** **ETD4302**	MF	
					SA	
					KL	
					HP	
					SSC	
					SMC	
					WP	
					BL	✓
					PC	
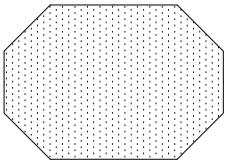	**ACET430** **Infill Foam**	**1**	**each**	**ETD432**	MF	
					SA	
					KL	
					HP	
					SSC	
					SMC	
					WP	
					BL	✓
					PC	

T-BARS
ACVG65=2.5mm
ACVG66=3.0mm
ACVL150=4.0mm

Screw (Grub)

MF = Mill Finish
SA = Silver Anodised
KL = Basic Colour
HP = Special Colour
SSC = Smooth Satin Chrome
SMC = Smokey Chrome
PC = Polished Chrome
WP = White
BL = Black

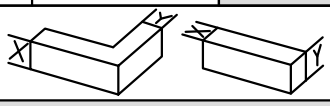

Alitherm 400 Flush Door

ACCESSORIES : PHOTOS & DRAWINGS

Image	Part Code	Pack	Unit	Application	Colour	
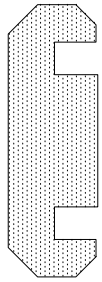	**ACET4302** **Infill Foam**	1	each	ETD4302	MF	
					SA	
					KL	
					HP	
					SSC	
					SMC	
					WP	
					BL	✓
					PC	
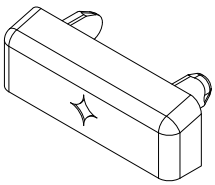	**ACET432** **Colour Match Drainage Cover Cap**	8	pack		MF	
					SA	✓
					KL	✓
					HP	
					SSC	
					SMC	✓
					WP	✓
					BL	
					PC	
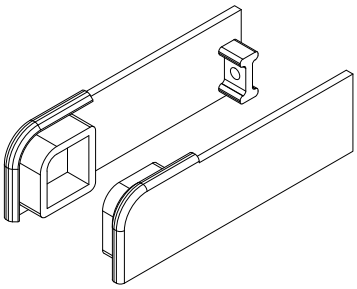	**ACET451** **Cast Cill End Caps** **(Pair)**	1	pair	ETC451	MF	✓
					SA	
					KL	✓
					HP	✓
					SSC	
					SMC	
					WP	✓
					BL	✓
					PC	
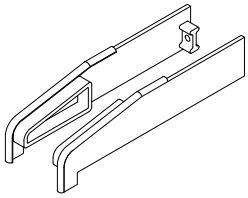	**ACET452** **Cast Cill End Caps** **(Pair)**	1	Pair	ETC452	MF	✓
					SA	
					KL	✓
					HP	✓
					SSC	
					SMC	
					WP	✓
					BL	✓
					PC	
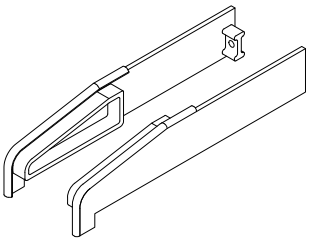	**ACET457** **Cast Cill End Caps** **(Pair)**	1	Pair	ETC457	MF	✓
					SA	
					KL	✓
					HP	✓
					SSC	
					SMC	
					WP	✓
					BL	✓
					PC	

T-BARS
ACVG65=2.5mm
ACVG66=3.0mm
ACVL150=4.0mm

Screw (Grub)

MF = Mill Finish
SA = Silver Anodised
KL = Basic Colour
HP = Special Colour
SSC = Smooth Satin Chrome
SMC = Smokey Chrome
PC = Polished Chrome
WP = White
BL = Black

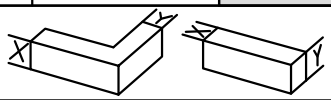

ISSUED: JULY 2024

Image	Part Code	Pack	Unit	Application	Colour	
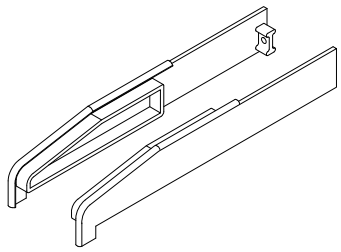	**ACET458** Cast Cill End Caps (Pair)	1	Pair	ETC458	MF	✓
					SA	
					KL	✓
					HP	✓
					SSC	
					SMC	
					WP	✓
					BL	✓
					PC	
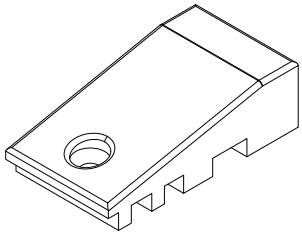	**ACET476** Run Up Block	2	pack	ETD412	MF	
					SA	
					KL	
					HP	
					SSC	
					SMC	
					WP	✓
					BL	✓
					PC	
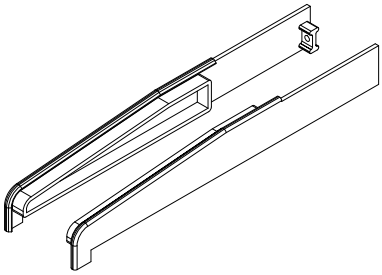	**ACET479N** Cast Cill End Caps (Pair)	1	Pair	ETC479	MF	✓
					SA	
					KL	✓
					HP	✓
					SSC	
					SMC	
					WP	✓
					BL	✓
					PC	
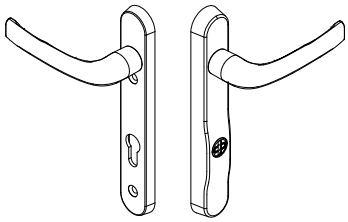	**ACET480** PAS 24 Lever / Lever Handle	1	pair		MF	
					SA	
					KL	✓
					HP	
					SSC	
					SMC	
					WP	✓
					BL	✓
					PC	✓
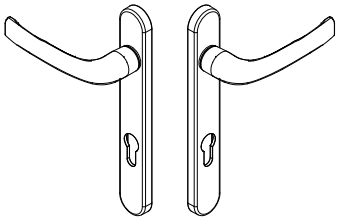	**ACET484** Standard Lever / Lever Handle	1	pair		MF	
					SA	
					KL	✓
					HP	
					SSC	
					SMC	
					WP	✓
					BL	✓
					PC	✓

T-BARS
ACVG65=2.5mm
ACVG66=3.0mm
ACVL150=4.0mm

Screw (Grub)

MF = Mill Finish
SA = Silver Anodised
KL = Basic Colour
HP = Special Colour
SSC = Smooth Satin Chrome
SMC = Smokey Chrome
PC = Polished Chrome
WP = White
BL = Black

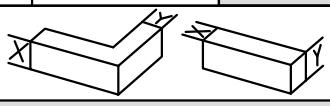

Alitherm 400 Flush Door

ACCESSORIES : PHOTOS & DRAWINGS

Image	Part Code	Pack	Unit	Application	Colour	
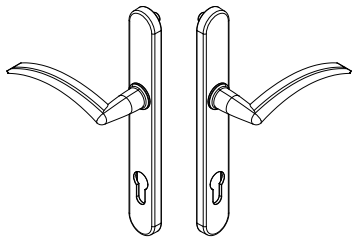	**ACET486** **Swept** **Lever / Lever Handle**	**1**	**pair**		MF	
					SA	
					KL	✓
					HP	
					SSC	
					SMC	
					WP	✓
					BL	✓
					PC	✓
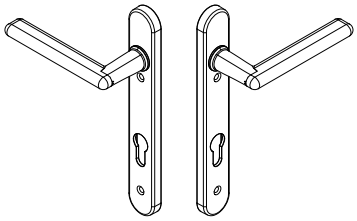	**ACET487** **Oval** **Lever / Lever Handle**	**1**	**pair**		MF	
					SA	
					KL	✓
					HP	
					SSC	
					SMC	
					WP	✓
					BL	✓
					PC	
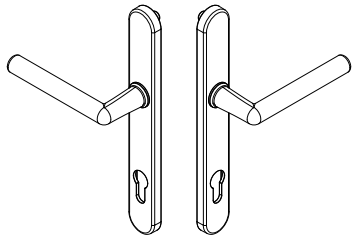	**ACET488** **Round** **Lever / Lever Handle**	**1**	**pair**		MF	
					SA	
					KL	✓
					HP	
					SSC	
					SMC	
					WP	✓
					BL	✓
					PC	✓
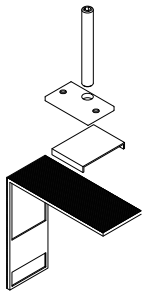	**ACET496** **Glass Adjustment Kit**	**1**	**kit**	**ETD4202** **ETD4203**	MF	
					SA	
					KL	
					HP	
					SSC	
					SMC	
					WP	
					BL	
					PC	
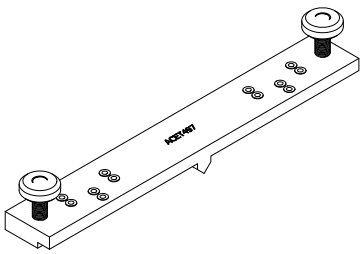	**ACET497** **Drill Jig**	**1**	**each**	**ACET496** **ETD4202** **ETD4203**	MF	✓
					SA	
					KL	
					HP	
					SSC	
					SMC	
					WP	
					BL	
					PC	

T-BARS
ACVG65=2.5mm
ACVG66=3.0mm
ACVL150=4.0mm

Screw (Grub)

MF = Mill Finish
SA = Silver Anodised
KL = Basic Colour
HP = Special Colour
SSC = Smooth Satin Chrome
SMC = Smokey Chrome
PC = Polished Chrome
WP = White
BL = Black

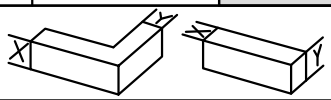

ISSUED: JULY 2024

Image	Part Code	Pack	Unit	Application	Colour	
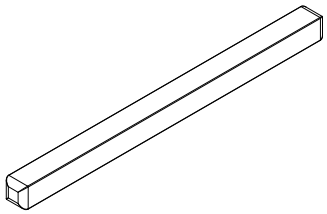	**ACMX008** **60mm Spindle**	**1**	**each**		MF	
					SA	
					KL	
					HP	
					SSC	
					SMC	
					WP	
					BL	
					PC	
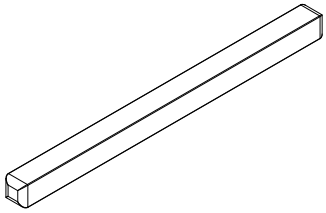	**ACMX409** **150mm Spindle**	**1**	**each**		MF	
					SA	
					KL	
					HP	
					SSC	
					SMC	
					WP	
					BL	
					PC	
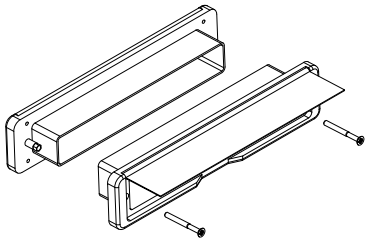	**ACPD6051** **Nu Mail Letter Box** **(Only available in black or satin nickel)**	**1**	**each**	**ETD430** **ETD4301** **ETD4302**	MF	
					SA	
					KL	
					HP	
					SSC	
					SMC	
					WP	
					BL	
					PC	
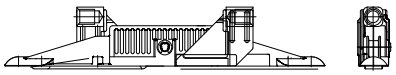	**ACPD844** **35mm Backset Shootbolt Adaptor**	**1**	**each**	**All Locks Excluding** **ACUL267** **ACUL268** **ACUL276** **ACUL277** **ACUL278**	MF	✓
					SA	
					KL	
					HP	
					SSC	
					SMC	
					WP	
					BL	
					PC	
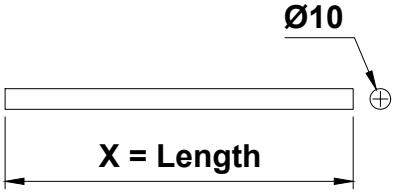	**ACPD8XX** **10mm Dia Galvanised Rod** **ACPD846: X = 1000mm** **ACPD847: X = 1250mm** **ACPD848: X = 1500mm** **ACPD849: X = 2000mm**	**1**	**each**	**ACPD844**	MF	✓
					SA	
					KL	
					HP	
					SSC	
					SMC	
					WP	
					BL	
					PC	

T-BARS
ACVG65=2.5mm
ACVG66=3.0mm
ACVL150=4.0mm

Screw (Grub)

MF = Mill Finish
SA = Silver Anodised
KL = Basic Colour
HP = Special Colour
SSC = Smooth Satin Chrome
SMC = Smokey Chrome
PC = Polished Chrome
WP = White
BL = Black

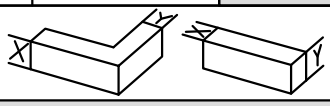

Alitherm 400 Flush Door

ACCESSORIES : PHOTOS & DRAWINGS

Image	Part Code	Pack	Unit	Application	Colour
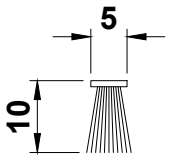	**ACSH038N** **5 x 10mm Woolpile (Grey)**	**225**	**m**		MF SA KL HP SSC SMC WP BL PC
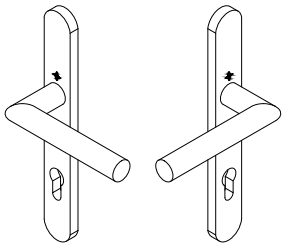	**ACSM013** **Stainless Steel Lever Handle on Oval Backplate (Not Handed)**	**1**	**Pair**		MF SA KL HP SSC SMC WP BL PC
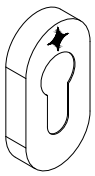	**ACSM015SS** **Stainless Steel Oval Escutcheon** **Kit Contains:** **1 x External Cover Plate** **1 x Internal Fixing Plate** **4 x Screws**	**1**	**each**	**ACSM020SS** **ACSM021SS** **ACSM040SS**	MF SA KL HP SSC SMC WP BL PC
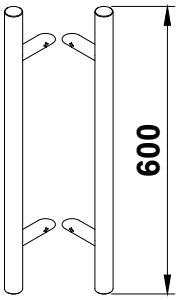	**ACSM020SS** **600mm Stainless Steel Tubular Handle (Pair)** **Back to back fixing kit included.**	**1**	**each**	**ACSM015SS**	MF SA KL HP SSC SMC WP BL PC
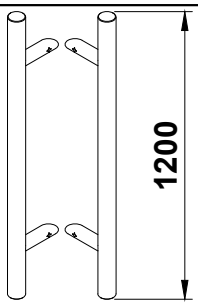	**ACSM021SS** **1200mm Stainless Steel Tubular Handle (Pair)** **Back to back fixing kit included.**	**1**	**each**	**ACSM015SS**	MF SA KL HP SSC SMC WP BL PC

T-BARS
ACVG65=2.5mm
ACVG66=3.0mm
ACVL150=4.0mm

Screw (Grub)

MF	**= Mill Finish**	**WP**	**= White**
SA	**= Silver Anodised**	**BL**	**= Black**
KL	**= Basic Colour**		
HP	**= Special Colour**		
SSC	**= Smooth Satin Chrome**		
SMC	**= Smokey Chrome**		
PC	**= Polished Chrome**		

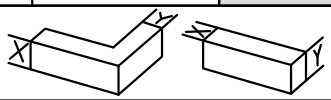

ISSUED: JULY 2024

Image	Part Code	Pack	Unit	Application	Colour
	ACSM030 **Secret Single Fixing Kit for ACISM20SS & ACISM21SS**	**1**	**each**	**ACSM020SS ACSM021SS ACSM037 ACSM038**	MF SA KL HP SSC SMC WP BL PC
	ACSM031 **Back to Back Fixing Kit for ACISM20SS & ACISM21SS**	**1**	**each**	**ACSM020SS ACSM021SS**	MF SA KL HP SSC SMC WP BL PC
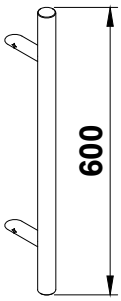	**ACSM037SS** **600mm Stainless Steel Tubular Handle (Single)**	**1**	**each**	**ACSM015SS ACSM032**	MF SA KL HP SSC SMC WP BL PC
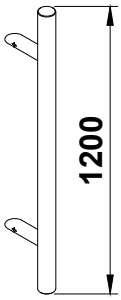	**ACSM038SS** **1200mm Stainless Steel Tubular Handle (Single)**	**1**	**each**	**ACSM015SS ACSM032**	MF SA KL HP SSC SMC WP BL PC
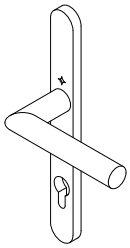	**ACSM058SS** **Stainless Steel Lever Handle on Long Backplate (Not Handed)** **Fixings and Spindle Sold Separately**	**1**	**pair**	**ACSM015SS ACMX409 ACMX008 ACUN3509 WCA134**	MF SA KL HP SSC SMC WP BL PC

T-BARS
ACVG65=2.5mm
ACVG66=3.0mm
ACVL150=4.0mm

Screw (Grub)

MF = Mill Finish
SA = Silver Anodised
KL = Basic Colour
HP = Special Colour
SSC = Smooth Satin Chrome
SMC = Smokey Chrome
PC = Polished Chrome
WP = White
BL = Black

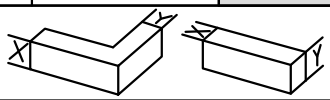

Image	Part Code	Pack	Unit	Application	Colour	
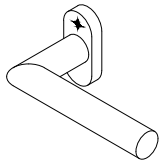	**ACSM059SS** **Stainless Steel Lever Handle on Oval Backplate (Not Handed)** **Fixings and Spindle Sold Separately**	**1**	**pair**	**ACSM015SS** **ACMX409** **ACMX008** **ACUN3509** **WCA134**	MF SA KL HP SSC SMC WP BL PC	
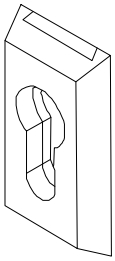	**ACSZ400** **Safety Lock Plate** **Door Handle - External**	**1**	**each**		MF SA KL HP SSC SMC WP BL PC	 ✓ ✓ ✓ ✓ ✓
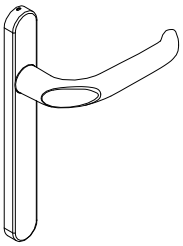	**ACSZ800** **External Lever Handle Without Cylinder**	**1**	**each**	**ACSZ801** **ACSZ803** **ACSZ830**	MF SA KL HP SSC SMC WP BL PC	 ✓ ✓ ✓ ✓ ✓
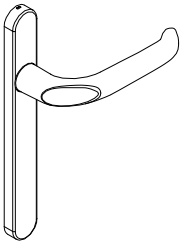	**ACSZ801** **Internal Lever Handle Without Cylinder**	**1**	**each**	**ACSZ800** **ACSZ803**	MF SA KL HP SSC SMC WP BL PC	 ✓ ✓ ✓ ✓ ✓
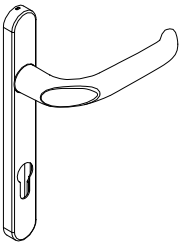	**ACSZ802** **External Handle With Cylinder**	**1**	**each**	**ACSZ800** **ACSZ803**	MF SA KL HP SSC SMC WP BL PC	 ✓ ✓ ✓ ✓ ✓

T-BARS
ACVG65=2.5mm
ACVG66=3.0mm
ACVL150=4.0mm

Screw (Grub)

MF = Mill Finish
SA = Silver Anodised
KL = Basic Colour
HP = Special Colour
SSC = Smooth Satin Chrome
SMC = Smokey Chrome
PC = Polished Chrome
WP = White
BL = Black

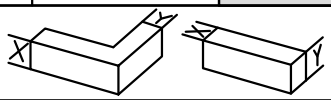

Image	Part Code	Pack	Unit	Application	Colour	
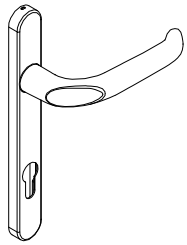	**ACSZ803** Internal Handle With Cylinder	1	each	ACSZ55* ACSZ801 ACSZ803 ACMX309	MF	
					SA	✓
					KL	✓
					HP	✓
					SSC	
					SMC	
					WP	
					BL	✓
					PC	✓
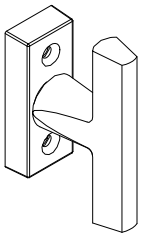	**ACSZ827** Internal 'T' Door Handle With Short Backplate	1	each		MF	
					SA	✓
					KL	✓
					HP	✓
					SSC	
					SMC	
					WP	
					BL	✓
					PC	✓
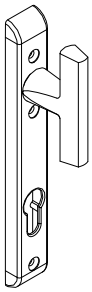	**ACSZ830** Internal 'T' Door Handle With Long Backplate	1	each		MF	
					SA	✓
					KL	✓
					HP	✓
					SSC	
					SMC	
					WP	
					BL	✓
					PC	✓
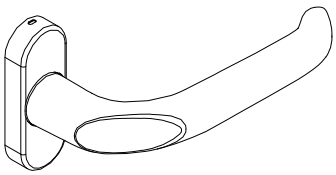	**ACSZ836** Internal Door Handle With Short Backplate	1	each		MF	
					SA	✓
					KL	✓
					HP	✓
					SSC	
					SMC	
					WP	
					BL	✓
					PC	✓
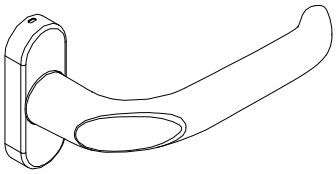	**ACSZ837** External Door Handle With Short Backplate	1	each		MF	
					SA	✓
					KL	✓
					HP	✓
					SSC	
					SMC	
					WP	
					BL	✓
					PC	✓

T-BARS
ACVG65=2.5mm
ACVG66=3.0mm
ACVL150=4.0mm

Screw (Grub)

MF = Mill Finish
SA = Silver Anodised
KL = Basic Colour
HP = Special Colour
SSC = Smooth Satin Chrome
SMC = Smokey Chrome
PC = Polished Chrome
WP = White
BL = Black

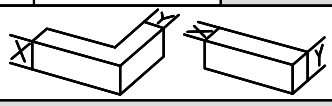

Alitherm 400 Flush Door

ACCESSORIES : PHOTOS & DRAWINGS

Image	Part Code	Pack	Unit	Application	Colour	
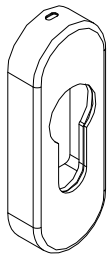	**ACSZ839** **Escutcheon (Cylinder Cover)**	1	each		MF	
					SA	✓
					KL	✓
					HP	✓
					SSC	
					SMC	
					WP	
					BL	✓
					PC	✓
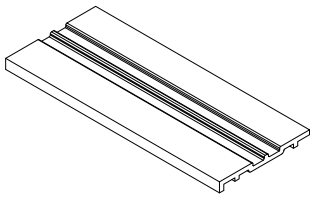	**ACUL065** **42mm Bridge Packer**	12	pack	ETD404 ETD430	MF	
					SA	
					KL	
					HP	
					SSC	
					SMC	
					WP	
					BL	✓
					PC	
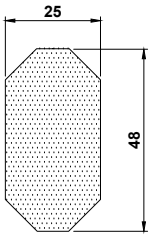	**ACUL078** **Infill Foam**	1	each	ETD4202	MF	
					SA	
					KL	
					HP	
					SSC	
					SMC	
					WP	
					BL	✓
					PC	
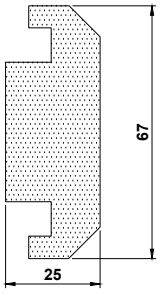	**ACUL080** **Infill Foam**	1	each	ETD430 ETD4301	MF	
					SA	
					KL	
					HP	
					SSC	
					SMC	
					WP	
					BL	✓
					PC	
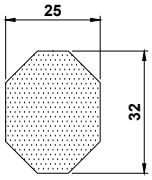	**ACUL081** **Infill Foam**	1	each	ETD404	MF	
					SA	
					KL	
					HP	
					SSC	
					SMC	
					WP	
					BL	✓
					PC	

T-BARS
ACVG65=2.5mm
ACVG66=3.0mm
ACVL150=4.0mm

Screw (Grub)

MF = Mill Finish
SA = Silver Anodised
KL = Basic Colour
HP = Special Colour
SSC = Smooth Satin Chrome
SMC = Smokey Chrome
PC = Polished Chrome
WP = White
BL = Black

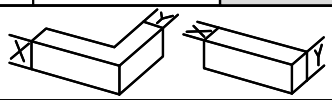

ISSUED: JULY 2024

Alitherm 400 Flush Door

ACCESSORIES : PHOTOS & DRAWINGS

Image	Part Code	Pack	Unit	Application	Colour	
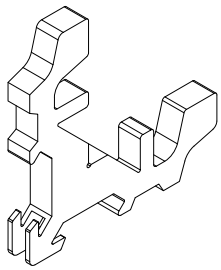	**ACUL210A** **Mechanical Cleat**	24	pack	ETD402 ETD412	MF	✓
					SA	
					KL	
					HP	
					SSC	
					SMC	
					WP	
					BL	
					PC	
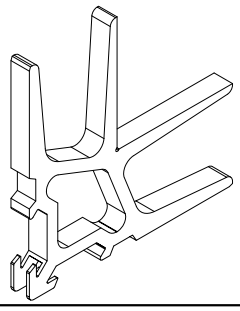	**ACUL210B** **Mechanical Cleat**	24	pack	ETD412	MF	✓
					SA	
					KL	
					HP	
					SSC	
					SMC	
					WP	
					BL	
					PC	
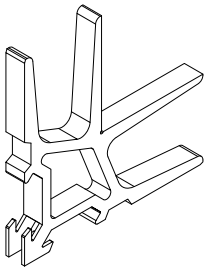	**ACUL222** **Mechanical Cleat**	24	pack	ETD422 ETD4202	MF	✓
					SA	
					KL	
					HP	
					SSC	
					SMC	
					WP	
					BL	
					PC	
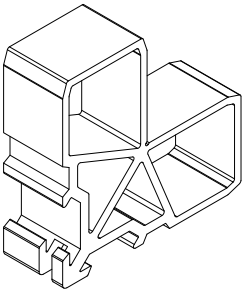	**ACUL225** **Mechanical Cleat**	24	pack	ETD4203	MF	✓
					SA	
					KL	
					HP	
					SSC	
					SMC	
					WP	
					BL	
					PC	
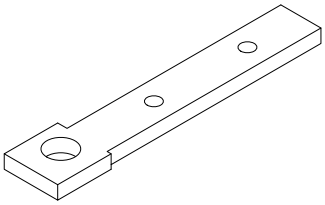	**ACUL242** **Aluminium Finger Bolt Guide**	1	each	ACPD846 ACPD847 ACPD848	MF	✓
					SA	
					KL	
					HP	
					SSC	
					SMC	
					WP	
					BL	
					PC	

T-BARS
ACVG65=2.5mm
ACVG66=3.0mm
ACVL150=4.0mm

Screw (Grub)

MF = Mill Finish
SA = Silver Anodised
KL = Basic Colour
HP = Special Colour
SSC = Smooth Satin Chrome
SMC = Smokey Chrome
PC = Polished Chrome
WP = White
BL = Black

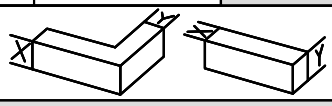

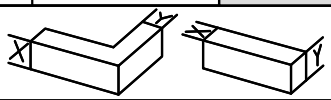

Alitherm 400 Flush Door

ACCESSORIES : PHOTOS & DRAWINGS

Image	Part Code	Pack	Unit	Application	Colour
	ACUL260 **Door Hinge**	**1**	**each**	**ETD412** **ETD4202** **ETD4203** **ETD422**	MF ✓ SA KL HP SSC SMC WP BL PC
					MF SA KL HP SSC SMC WP BL PC
					MF SA KL HP SSC SMC WP BL PC
					MF SA KL HP SSC SMC WP BL PC
					MF SA KL HP SSC SMC WP BL PC

MF = Mill Finish
SA = Silver Anodised
KL = Basic Colour
HP = Special Colour
SSC = Smooth Satin Chrome
SMC = Smokey Chrome
PC = Polished Chrome
WP = White
BL = Black

Image	Part Code	Pack	Unit	Application	Colour
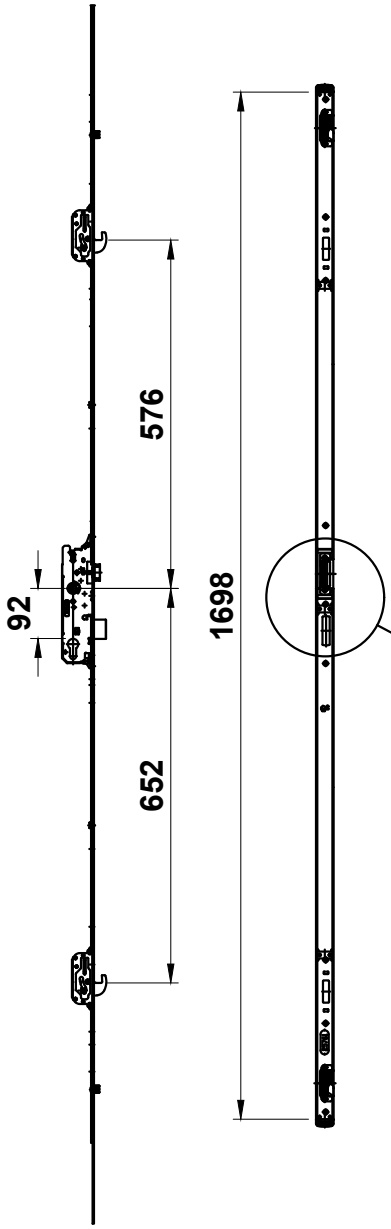	**ACUL267** **Lift Lever Handle Lock with Left Hand Keep** **Kit includes:** • 1 x Lift Level Handle Lock • 1 x Left Hand Full Height Keep **Viewed Externally** 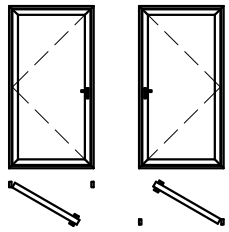 **Left Hand Open Out** **Right Hand Open In** 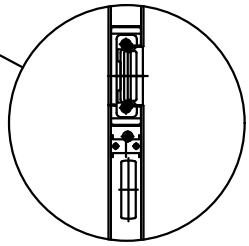 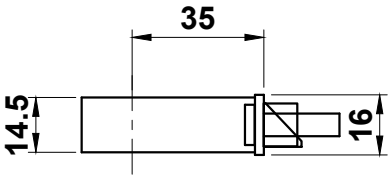	1	Pack	ACDV251 ACDV737 ACDV738 ACET480 ACET484 ACET486 ACET487 ACSM015SS ACSM040SS	MF ✓ SA KL HP SSC SMC W Z PC

T-BARS
ACVG65=2.5mm
ACVG66=3.0mm
ACVL150=4.0mm

Screw (Grub)

MF	= Mill Finish	WP	= White
SA	= Silver Anodised	BL	= Black
KL	= Basic Colour		
HP	= Special Colour		
SSC	= Smooth Satin Chrome		
SMC	= Smokey Chrome		
PC	= Polished Chrome		

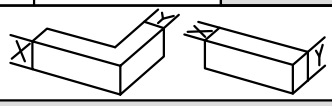

Alitherm 400 Flush Door

ACCESSORIES : PHOTOS & DRAWINGS

Image	Part Code	Pack	Unit	Application	Colour
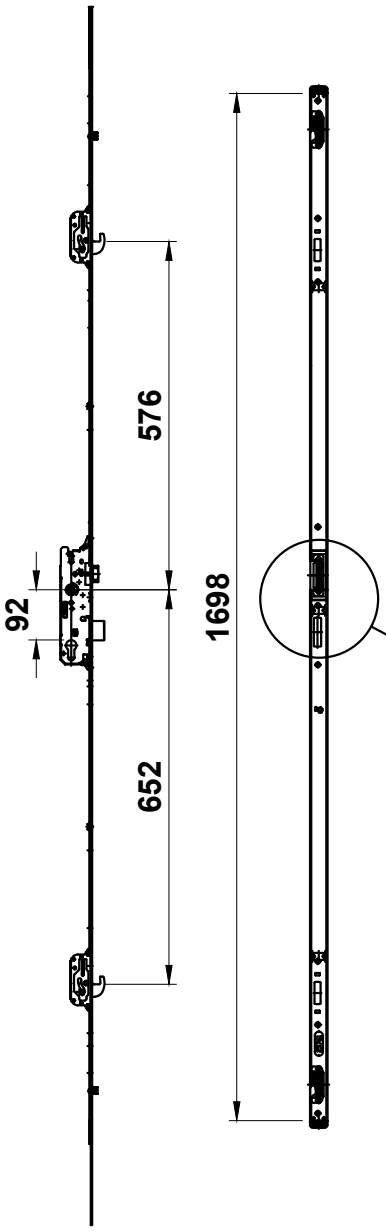	**ACUL268** **Lift Lever Handle Lock with Right Hand Keep** **Kit includes:** • 1 x Lift Level Handle Lock • 1 x Right Hand Full Height Keep **Viewed Externally** 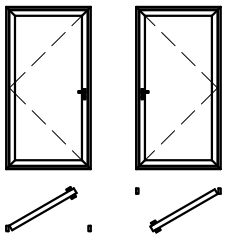 **Left Hand Open In** **Right Hand Open Out** 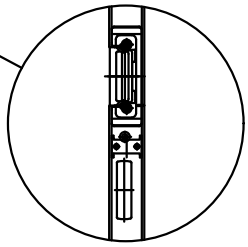 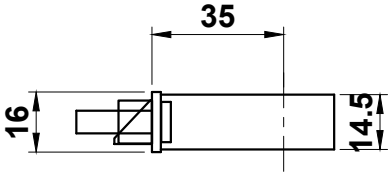	1	Pack	ACDV251 ACDV737 ACDV738 ACET480 ACET484 ACET486 ACET487 ACSM015SS ACSM040SS	MF ✓ SA KL HP SSC SMC W Z PC

T-BARS
ACVG65=2.5mm
ACVG66=3.0mm
ACVL150=4.0mm

Screw (Grub)

MF	= Mill Finish	WP	= White
SA	= Silver Anodised	BL	= Black
KL	= Basic Colour		
HP	= Special Colour		
SSC	= Smooth Satin Chrome		
SMC	= Smokey Chrome		
PC	= Polished Chrome		

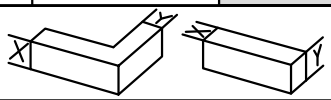

ISSUED: JULY 2024

Image	Part Code	Pack	Unit	Application	Colour
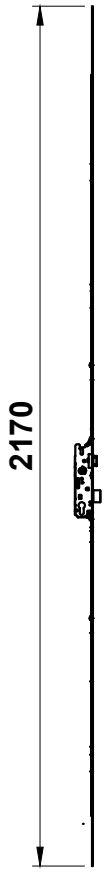	**ACUL276** **Secondary Door Lock**	**1**	**Pack**	**ACDV251** **ACDV737** **ACDV738** **ACET480** **ACET484** **ACET486** **ACET487** **ACSM015SS** **ACSM040SS** **ACUL279**	MF ✓ SA KL HP SSC SMC WP BL PC
					MF SA KL HP SSC SMC WP BL PC
					MF SA KL HP SSC SMC WP BL PC

T-BARS
ACVG65=2.5mm
ACVG66=3.0mm
ACVL150=4.0mm

Screw (Grub)

MF = Mill Finish
SA = Silver Anodised
KL = Basic Colour
HP = Special Colour
SSC = Smooth Satin Chrome
SMC = Smokey Chrome
PC = Polished Chrome
WP = White
BL = Black

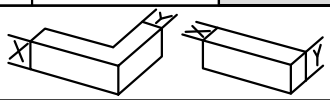

Image	Part Code	Pack	Unit	Application	Colour
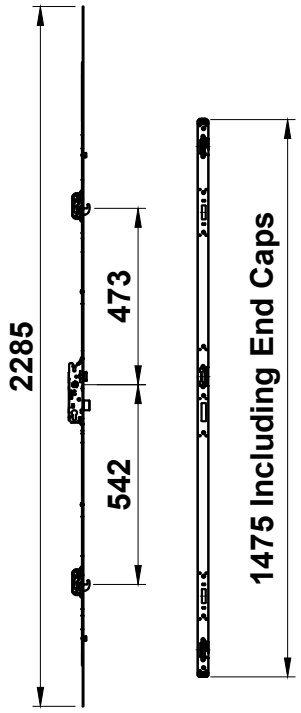	**ACUL277** **Lift Lever Primary Double Door Lock Left Hand Keep** **Kit includes:** • 1 x Primary Double Door Lock • 1 x Left Hand Full Height Keep **Viewed Externally** 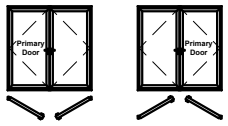 Left Hand Open Out Right Hand Open In 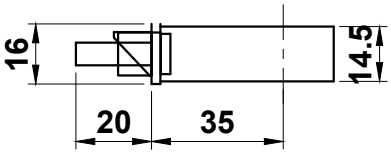	1	Pack	ACDV251 ACDV737 ACDV738 ACET480 ACET484 ACET486 ACET487 ACSM015SS ACSM040SS ACUL276	MF ✓ SA KL HP SSC SMC W Z PC
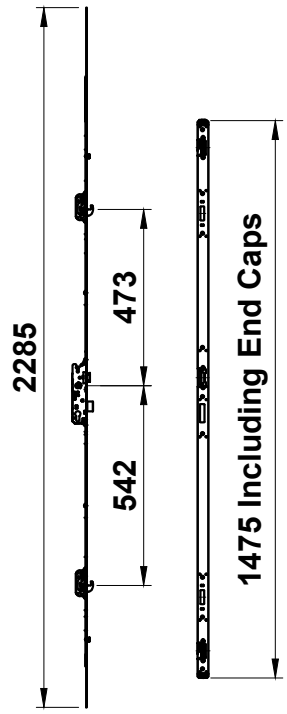	**ACUL278** **Lift Lever Primary Double Door Lock Right Hand Keep** **Kit includes:** • 1 x Primary Double Door Lock • 1 x Right Hand Full Height Keep **Viewed Externally** 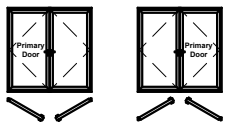 Right Hand Open Out Left Hand Open In 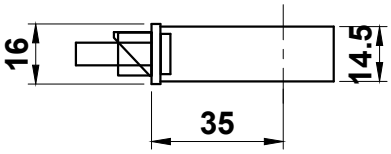	1	Pack	ACDV251 ACDV737 ACDV738 ACET480 ACET484 ACET486 ACET487 ACSM015SS ACSM040SS ACUL276	MF ✓ SA KL HP SSC SMC W Z PC

T-BARS
ACVG65=2.5mm
ACVG66=3.0mm
ACVL150=4.0mm

Screw (Grub)

MF	= Mill Finish	WP	= White
SA	= Silver Anodised	BL	= Black
KL	= Basic Colour		
HP	= Special Colour		
SSC	= Smooth Satin Chrome		
SMC	= Smokey Chrome		
PC	= Polished Chrome		

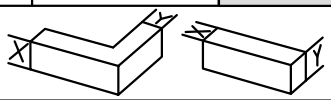

Image	Part Code	Pack	Unit	Application	Colour	
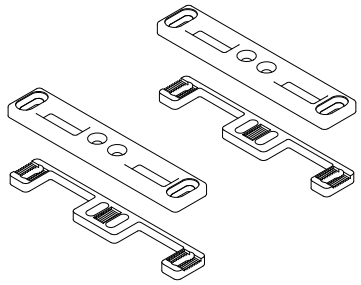	**ACUL279** **Double Door Keep Kit** **Kit contains:** **2 x Keeps** **2 x Base Plates**	**1**	**Kit**	**ACDV737** **ACDV738** **ETD412** **ETD491** **ETD493** **ETD497**	MF SA KL HP SSC SMC WP BL PC	✓
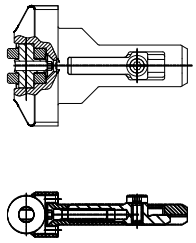	**ACUL291** **Roller Latch**	**1**	**Each**	**ACUL282** **ACUL283** **ACUL362** **ACUL363** **ACUL382** **ACUL383**	MF SA KL HP SSC SMC WP BL PC	✓
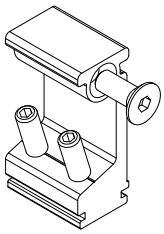	**ACUL295** **Low Threshold Bracket**	**1**	**Pair**	**ETD491** **ETD493** **ETD497**	MF SA KL HP SSC SMC WP BL PC	✓
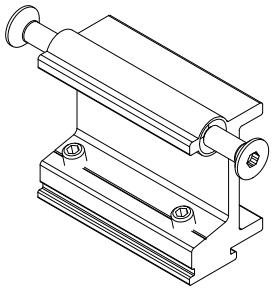	**ACUL299** **Transom/Mullion Bracket**	**10**	**Pack**	**ETD430**	MF SA KL HP SSC SMC WP BL PC	✓
					MF SA KL HP SSC SMC WP BL PC	

T-BARS
ACVG65=2.5mm
ACVG66=3.0mm
ACVL150=4.0mm

Screw (Grub)

MF = Mill Finish
SA = Silver Anodised
KL = Basic Colour
HP = Special Colour
SSC = Smooth Satin Chrome
SMC = Smokey Chrome
PC = Polished Chrome
WP = White
BL = Black

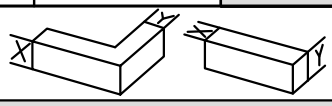

Image	Part Code	Pack	Unit	Application	Colour
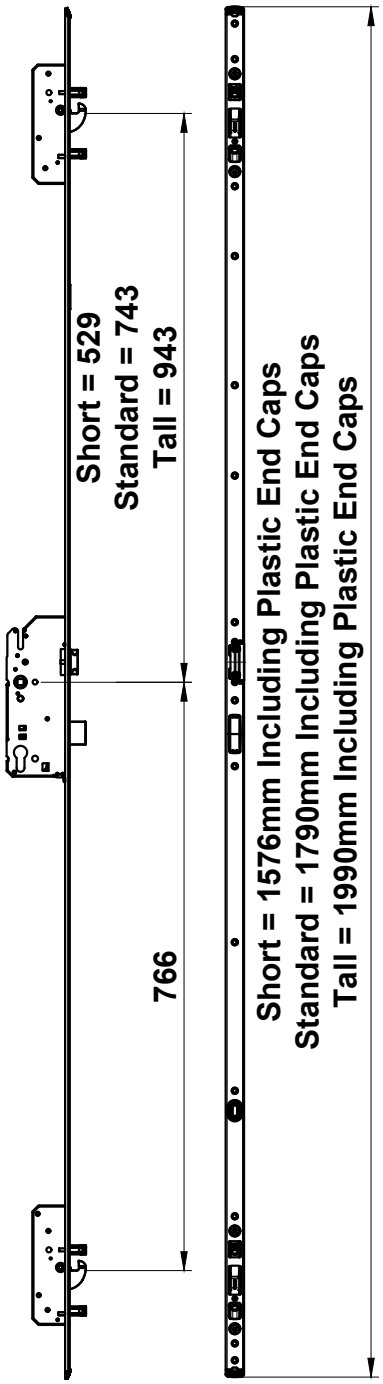	**Slam Lock** **Left Hand Keep** **ACUL360** **Short** **Kit includes:** • 1 x Short Slam Multi Point Lock • 1 x Short Left Hand full height keep • 2 x Release Magnets **ACUL280** **Standard** **Kit includes:** • 1 x Slam Multi Point Lock • 1 x Left Hand full height Keep • 2 x Release Magnets **ACUL380** **Tall** **Kit includes:** • 1 x Tall Slam Multi Point Lock • 1 x Tall Left Hand full height keep • 2 x Release Magnets **Viewed Externally** 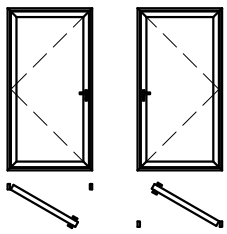 **Left Hand Open Out** **Right Hand Open In** 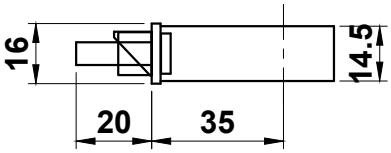	1	Pack	ACSM015SS ACSM020SS ACSM021SS	MF ✓ SA KL HP SSC SMC W Z PC

T-BARS
ACVG65=2.5mm
ACVG66=3.0mm
ACVL150=4.0mm

Screw (Grub)

MF	= Mill Finish	WP	= White
SA	= Silver Anodised	BL	= Black
KL	= Basic Colour		
HP	= Special Colour		
SSC	= Smooth Satin Chrome		
SMC	= Smokey Chrome		
PC	= Polished Chrome		

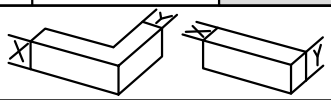

Image	Part Code	Pack	Unit	Application	Colour
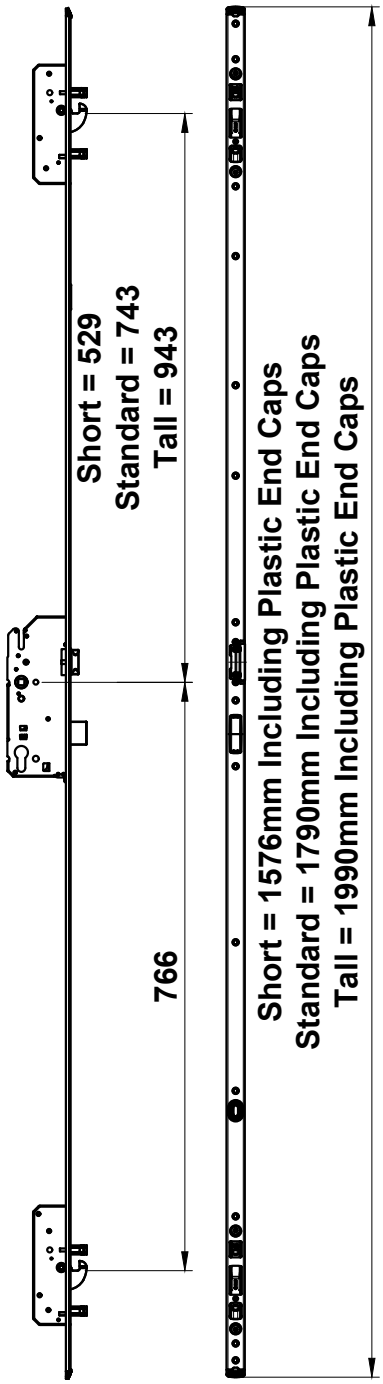	**Slam Lock** **Right Hand Keep** **ACUL361** **Short** **Kit includes:** • 1 x Short Slam Multi Point Lock • 1 x Short Right Hand full height keep • 2 x Release Magnets **ACUL281** **Standard** **Kit includes:** • 1 x Slam Multi Point Lock • 1 x Right Hand full height Keep • 2 x Release Magnets **ACUL381** **Tall** **Kit includes:** • 1 x Tall Slam Multi Point Lock • 1 x Tall Right Hand full height keep • 2 x Release Magnets **Viewed Externally** 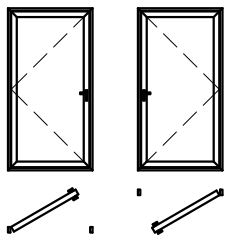 **Left Hand Open In** **Right Hand Open Out** 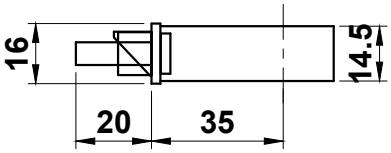	1	Pack	ACSM015SS ACSM020SS ACSM021SS	MF ✓ SA KL HP SSC SMC W Z PC

T-BARS
ACVG65=2.5mm
ACVG66=3.0mm
ACVL150=4.0mm

Screw (Grub)

MF	= Mill Finish	WP	= White
SA	= Silver Anodised	BL	= Black
KL	= Basic Colour		
HP	= Special Colour		
SSC	= Smooth Satin Chrome		
SMC	= Smokey Chrome		
PC	= Polished Chrome		

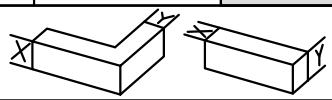

Image	Part Code	Pack	Unit	Application	Colour
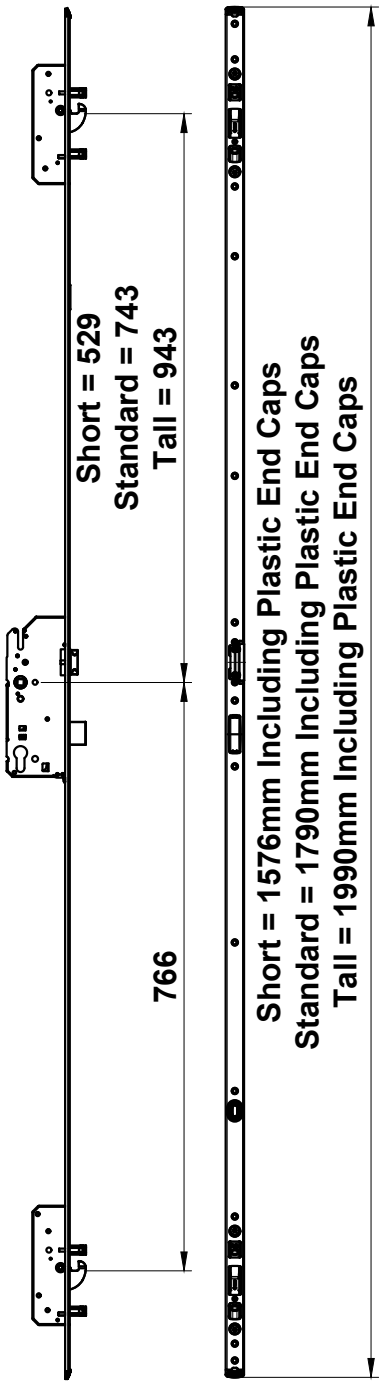	**Key Wind** **Left Hand Keep** **ACUL362** **Short** **Kit includes:** • **1 x Short key wind multi point lock** • **1 x Short Left Hand full height keep** **ACUL282** **Standard** **Kit includes:** • **1 x Keywind Multi Point Lock** • **1 x Left Hand full height Keep** **ACUL382** **Tall** **Kit includes:** • **1 x Tall key wind multi point lock** • **1 x Tall Left Hand full height keep** **Viewed Externally** 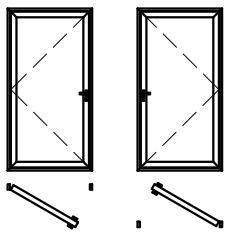 **Left Hand Open Out** **Right Hand Open In** 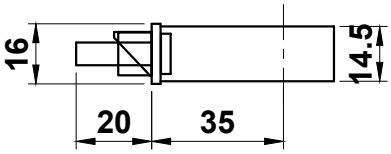	1	Pack	**ACDV251** **ACDV737** **ACDV738** **ACET480** **ACET484** **ACET486** **ACET487** **ACSM015SS** **ACSM040SS**	MF ✓ SA KL HP SSC SMC W Z PC

T-BARS
ACVG65=2.5mm
ACVG66=3.0mm
ACVL150=4.0mm

Screw (Grub)

MF	= Mill Finish	WP	= White
SA	= Silver Anodised	BL	= Black
KL	= Basic Colour		
HP	= Special Colour		
SSC	= Smooth Satin Chrome		
SMC	= Smokey Chrome		
PC	= Polished Chrome		

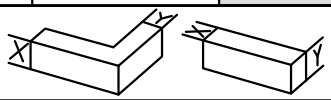

Image	Part Code	Pack	Unit	Application	Colour
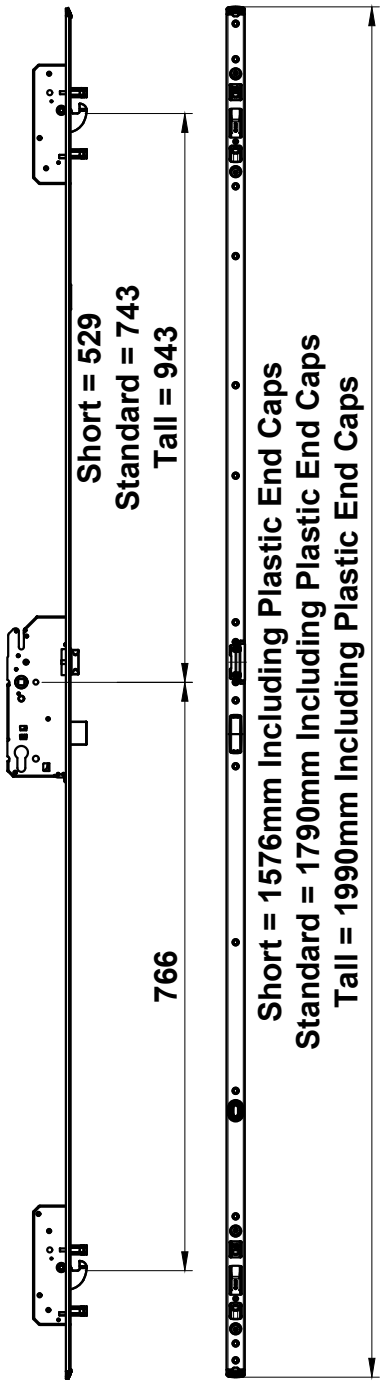	**Key Wind** **Right Hand Keep** **ACUL363** **Short** **Kit includes:** • **1 x Short key wind multi point lock** • **1 x Short Right Hand full height keep** **ACUL283** **Standard** **Kit includes:** • **1 x Lift Lever Multi Point Lock** • **1 x Right Hand full height Keep** **ACUL383** **Tall** **Kit includes:** • **1 x Tall key wind multi point lock** • **1 x Tall Right Hand full height keep** **Viewed Externally** 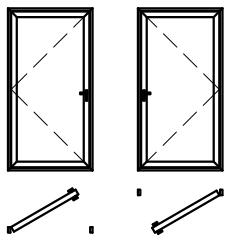 **Left Hand Open In** **Right Hand Open Out** 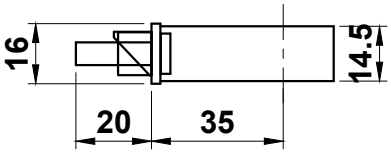	1	Pack	**ACDV251** **ACDV737** **ACDV738** **ACET480** **ACET484** **ACET486** **ACET487** **ACSM015SS** **ACSM040SS**	MF ✓ SA KL HP SSC SMC W Z PC

T-BARS
ACVG65=2.5mm
ACVG66=3.0mm
ACVL150=4.0mm

Screw (Grub)

MF	= Mill Finish	WP	= White
SA	= Silver Anodised	BL	= Black
KL	= Basic Colour		
HP	= Special Colour		
SSC	= Smooth Satin Chrome		
SMC	= Smokey Chrome		
PC	= Polished Chrome		

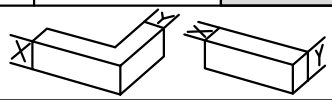

Alitherm 400 Flush Door

ACCESSORIES : PHOTOS & DRAWINGS

Image	Part Code	Pack	Unit	Application	Colour
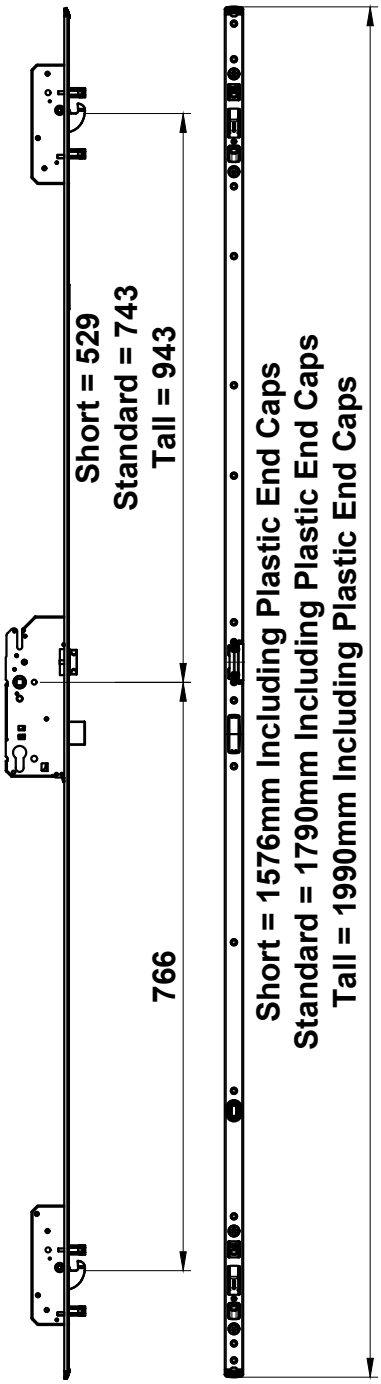	**Lift Lever** **Left Hand Keep** **ACUL377** Short Kit includes: • 1 x Lift Lever Lock • 1 x Left Hand Full Height Keep **ACUL272** Standard Kit includes: • 1 x Lift Lever Lock • 1 x Left Hand Full Height Keep **ACUL374** Tall Kit includes: • 1 x Lift Lever Lock • 1 x Left Hand Full Height Keep **Viewed Externally** 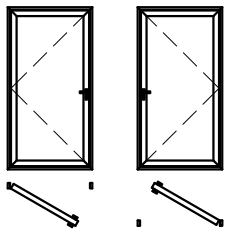 Left Hand Open Out — Right Hand Open In 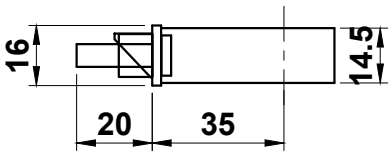	1	Pack	ACDV251 ACET480 ACET484 ACET486 ACET487	MF ✓ SA KL HP SSC SMC W Z PC

T-BARS
ACVG65=2.5mm
ACVG66=3.0mm
ACVL150=4.0mm

Screw (Grub)

MF	= Mill Finish	WP	= White
SA	= Silver Anodised	BL	= Black
KL	= Basic Colour		
HP	= Special Colour		
SSC	= Smooth Satin Chrome		
SMC	= Smokey Chrome		
PC	= Polished Chrome		

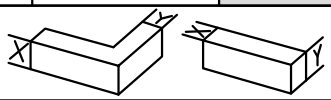

ISSUED: JULY 2024

Image	Part Code	Pack	Unit	Application	Colour
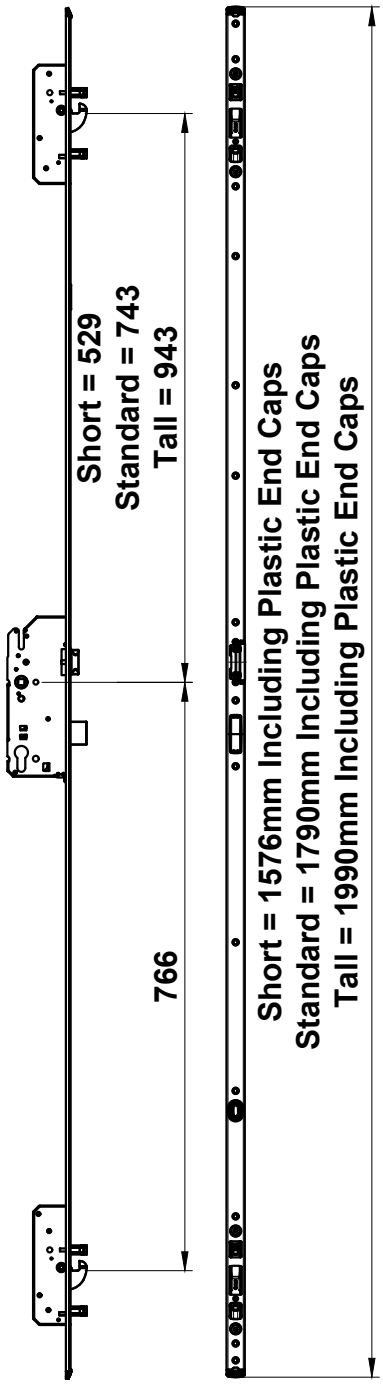	**Lift Lever** **Right Hand Keep** **ACUL378** **Short** **Kit includes:** • 1 x Lift Lever Lock • 1 x Right Hand Full Height Keep **ACUL273** **Standard** **Kit includes:** • 1 x Lift Lever Lock • 1 x Right Hand Full Height Keep **ACUL375** **Tall** **Kit includes:** • 1 x Lift Lever Lock • 1 x Right Hand Full Height Keep **Viewed Externally** 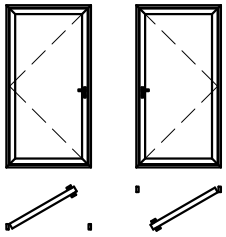 **Left Hand Open In** **Right Hand Open Out** 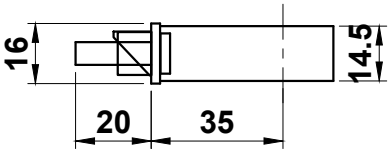	1	Pack	ACDV251 ACET480 ACET484 ACET486 ACET487 ACUL276	MF ✓ SA KL HP SSC SMC W Z PC

T-BARS
ACVG65=2.5mm
ACVG66=3.0mm
ACVL150=4.0mm

Screw (Grub)

MF	= Mill Finish	WP	= White
SA	= Silver Anodised	BL	= Black
KL	= Basic Colour		
HP	= Special Colour		
SSC	= Smooth Satin Chrome		
SMC	= Smokey Chrome		
PC	= Polished Chrome		

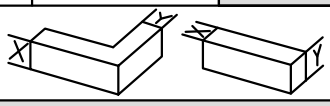

Image	Part Code	Pack	Unit	Application	Colour	
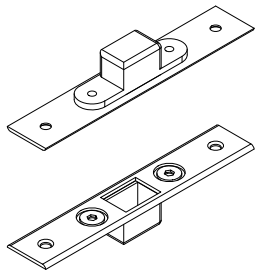	**ACUL390** **Finger Bolt Flat Keep**	**1**	**Pair**	**All Locks Excluding ACUL276 ACUL277 ACUL278**	MF SA KL HP SSC SMC WP BL PC	✓
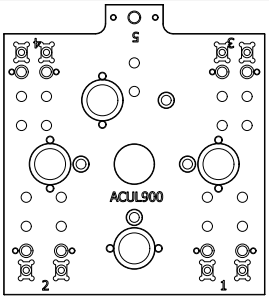	**ACUL900** **Punch Tool**	**1**	**each**	**ETD402 ETD404 ETD412 ETD4202 ETD4203 ETD422**	MF SA KL HP SSC SMC WP BL PC	✓
	**ACUN033** **3 - 5mm Glazing Gasket**	**100**	**m**		MF SA KL HP SSC SMC WP BL PC	✓
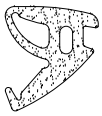	**ACUN036** **6 - 8mm Glazing Gasket**	**100**	**m**		MF SA KL HP SSC SMC WP BL PC	✓
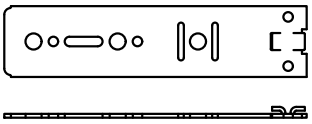	**ACUN23X** **Screw Fixing Lug** **B x 38mm x 2mm** **ACUN230: B = 160mm** **ACUN232: B = 240mm** **ACUN233: B = 280mm**	**100**	**Pack**	**ETC451 ETC452 ETC457 ETC458 ETC478 ETC479 ETD412**	MF SA KL HP SSC SMC WP BL PC	✓

T-BARS
ACVG65=2.5mm
ACVG66=3.0mm
ACVL150=4.0mm

Screw (Grub)

MF = Mill Finish
SA = Silver Anodised
KL = Basic Colour
HP = Special Colour
SSC = Smooth Satin Chrome
SMC = Smokey Chrome
PC = Polished Chrome
WP = White
BL = Black

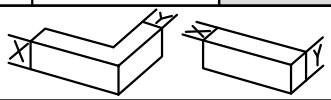

Image	Part Code	Pack	Unit	Application	Colour	
	**ACUN3035** **Door Gasket**	**100**	**m**		MF	
					SA	
					KL	
					HP	
					SSC	
					SMC	
					WP	
					BL	✓
					PC	
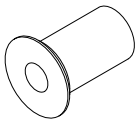	**ACUN3509** **M5 Rivnut**	**20**	**Pack**		MF	
					SA	
					KL	
					HP	
					SSC	
					SMC	
					WP	
					BL	
					PC	
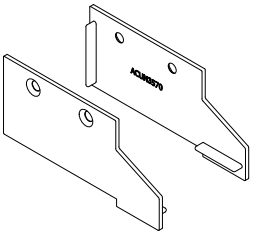	**ACUN3570** **UN3570 End Caps**	**1**	**Pair**		MF	
					SA	
					KL	
					HP	
					SSC	
					SMC	
					WP	✓
					BL	✓
					PC	
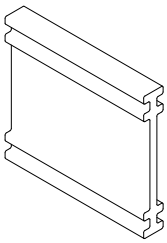	**ACUN3701** **Anti-Crush Support**	**25**	**Pack**		MF	
					SA	
					KL	
					HP	
					SSC	
					SMC	
					WP	
					BL	✓
					PC	
	**ACVG31N** **3mm Glazing Gasket**	**200**	**m**		MF	
					SA	
					KL	
					HP	
					SSC	
					SMC	
					WP	
					BL	✓
					PC	

T-BARS
ACVG65=2.5mm
ACVG66=3.0mm
ACVL150=4.0mm

Screw (Grub)

MF = Mill Finish
SA = Silver Anodised
KL = Basic Colour
HP = Special Colour
SSC = Smooth Satin Chrome
SMC = Smokey Chrome
PC = Polished Chrome
WP = White
BL = Black

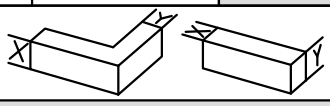

Alitherm 400 Flush Door

ACCESSORIES : PHOTOS & DRAWINGS

Image	Part Code	Pack	Unit	Application	Colour	
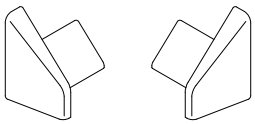	**ACVL059** End Caps	1	Pair	VL72 UN079	MF	
					SA	
					KL	
					HP	
					SSC	
					SMC	
					WP	✓
					BL	✓
					PC	
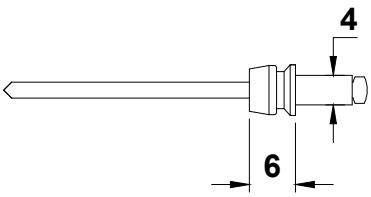	**ACVL061** Rivet to secure VL72	100	Pack	VL72	MF	✓
					SA	
					KL	
					HP	
					SSC	
					SMC	
					WP	
					BL	
					PC	
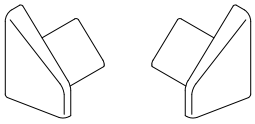	**ACVL072** Cast End Caps	1	Pair	VL72	MF	✓
					SA	
					KL	✓
					HP	✓
					SSC	
					SMC	
					WP	✓
					BL	✓
					PC	
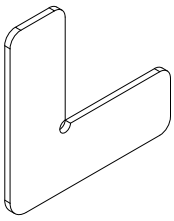	**WCA106SSZ** Stainless Steel Chevrons	50	pack	ETD402 ETD4202 ETD4203 ETD422	MF	✓
					SA	
					KL	
					HP	
					SSC	
					SMC	
					WP	
					BL	
					PC	
					MF	
					SA	
					KL	
					HP	
					SSC	
					SMC	
					WP	
					BL	
					PC	

T-BARS
ACVG65=2.5mm
ACVG66=3.0mm
ACVL150=4.0mm

Screw (Grub)

MF = Mill Finish
SA = Silver Anodised
KL = Basic Colour
HP = Special Colour
SSC = Smooth Satin Chrome
SMC = Smokey Chrome
PC = Polished Chrome
WP = White
BL = Black

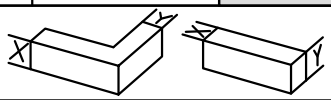

ISSUED: JULY 2024

Alitherm 400 Flush Door

STANDARD ACCESSORIES

Image	Part Code	Pack	Unit	Application	Colour	
	**ACMX09700** **Alu. Polish**	**1**	**each**		MF	✓
					SA	
					KL	
					HP	
					SSC	
					SMC	
					WP	
					BL	
					PC	
	**ACMX09761** **Maxi Gloss**	**1**	**each**		MF	
					SA	
					KL	
					HP	
					SSC	
					SMC	
					WP	
					BL	
					PC	
	**ACMX09762** **Alu. Bright**	**1**	**each**		MF	
					SA	
					KL	
					HP	
					SSC	
					SMC	
					WP	
					BL	
					PC	
	**ACMX09763** **Teflon Spray**	**1**	**each**		MF	
					SA	
					KL	
					HP	
					SSC	
					SMC	
					WP	
					BL	
					PC	
	**ACMX09764** **Maxi Clean**	**1**	**each**		MF	
					SA	
					KL	
					HP	
					SSC	
					SMC	
					WP	
					BL	
					PC	

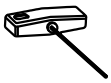

T-BARS
ACVG65=2.5mm
ACVG66=3.0mm
ACVL150=4.0mm

Screw (Grub)

MF = Mill Finish
SA = Silver Anodised
KL = Basic Colour
HP = Special Colour
SSC = Smooth Satin Chrome
SMC = Smokey Chrome
PC = Polished Chrome
WP = White
BL = Black

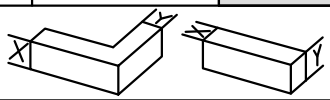

Alitherm 400 Flush Door

STANDARD ACCESSORIES

Image	Part Code	Pack	Unit	Application	Colour
	**ACMX09765** **Glue Cleaner** **De-grease and silicone remover (1 Litre).**	1	each		MF SA KL HP SSC SMC WP BL PC
	**ACMX09770** **Roll & Wrap 100mm**	1	each		MF SA KL HP SSC SMC WP BL PC
	**ACMX09775** **Grip Handwrap**	1	each		MF SA KL HP SSC SMC WP BL PC
	**ACMX09801** **Protective Tape 50mm**	1	each		MF SA KL HP SSC SMC WP BL PC
	**ACMX09802** **Protective Tape 70mm**	1	each		MF SA KL HP SSC SMC WP BL PC

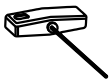

T-BARS
ACVG65=2.5mm
ACVG66=3.0mm
ACVL150=4.0mm

Screw (Grub)

MF	**= Mill Finish**	**WP**	**= White**
SA	**= Silver Anodised**	**BL**	**= Black**
KL	**= Basic Colour**		
HP	**= Special Colour**		
SSC	**= Smooth Satin Chrome**		
SMC	**= Smokey Chrome**		
PC	**= Polished Chrome**		

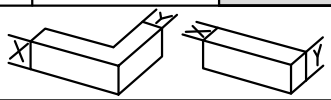

ISSUED: JULY 2024

Alitherm 400 Flush Door

STANDARD ACCESSORIES

Image	Part Code	Pack	Unit	Application	Colour	
	**ACMX09803** **Protective Tape 100mm**	**1**	**each**		MF SA KL HP SSC SMC WP BL PC	
	**ACSIL04** **Sealing Glue** **Order with suffix of KL colour (eg.ACSIL04KL005) or BL=Black/WP=White/ CL=Clear**	**1**	**each**		MF SA KL HP SSC SMC WP BL PC	 ✓ ✓ ✓
	**ACSIL05** **Rubber Sealant**	**1**	**each**		MF SA KL HP SSC SMC WP BL PC	
	**ACSIL08** **Silicon Gun**	**1**	**each**		MF SA KL HP SSC SMC WP BL PC	
	**ACSIL013** **Glue for Mitre**	**1**	**each**		MF SA KL HP SSC SMC WP BL PC	

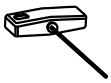

T-BARS
ACVG65=2.5mm
ACVG66=3.0mm
ACVL150=4.0mm

Screw (Grub)

MF = Mill Finish
SA = Silver Anodised
KL = Basic Colour
HP = Special Colour
SSC = Smooth Satin Chrome
SMC = Smokey Chrome
PC = Polished Chrome
WP = White
BL = Black

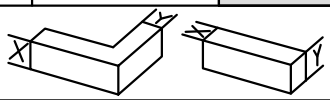

Alitherm 400 Flush Door

STANDARD ACCESSORIES

Image	Part Code	Pack	Unit	Application	Colour
	**ACSIL014** **Anti-Corrosion Coating**	1	each		MF ✓ SA KL HP SSC SMC WP BL PC
	**ACUN3900** **Gasket Roller**	1	each		MF SA KL HP SSC SMC WP BL PC
					MF SA KL HP SSC SMC WP BL PC
					MF SA KL HP SSC SMC WP BL PC
					MF SA KL HP SSC SMC WP BL PC

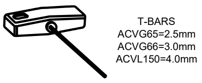

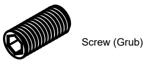

MF	**= Mill Finish**	**WP**	**= White**
SA	**= Silver Anodised**	**BL**	**= Black**
KL	**= Basic Colour**		
HP	**= Special Colour**		
SSC	**= Smooth Satin Chrome**		
SMC	**= Smokey Chrome**		
PC	**= Polished Chrome**		

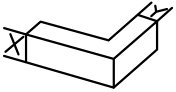

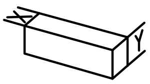

Section C

Sections

Scale Elevations

Open In - Elevations

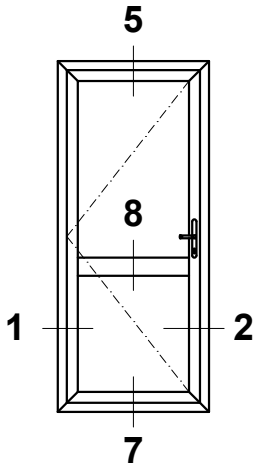

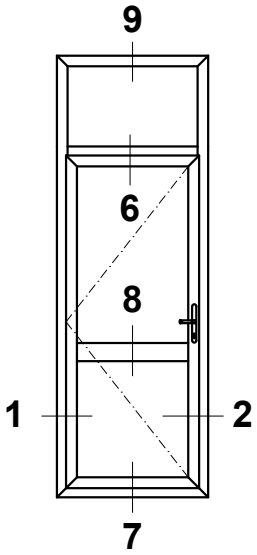

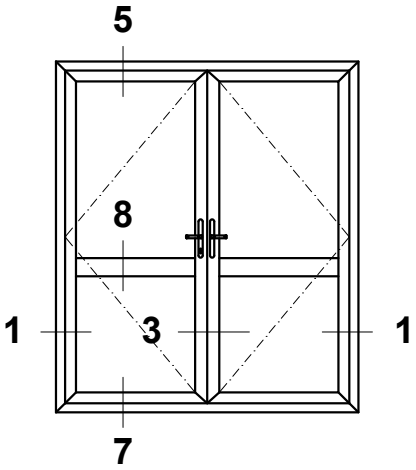

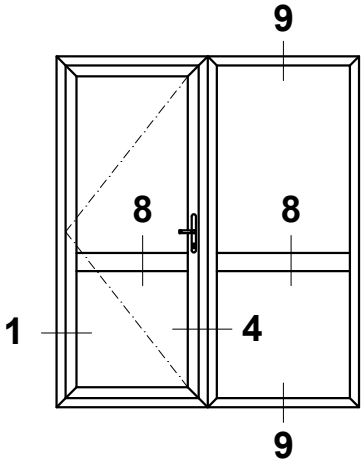

Do Not Scale From This Drawing

Open In - Detail 1a

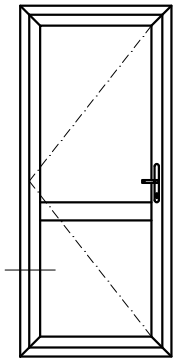

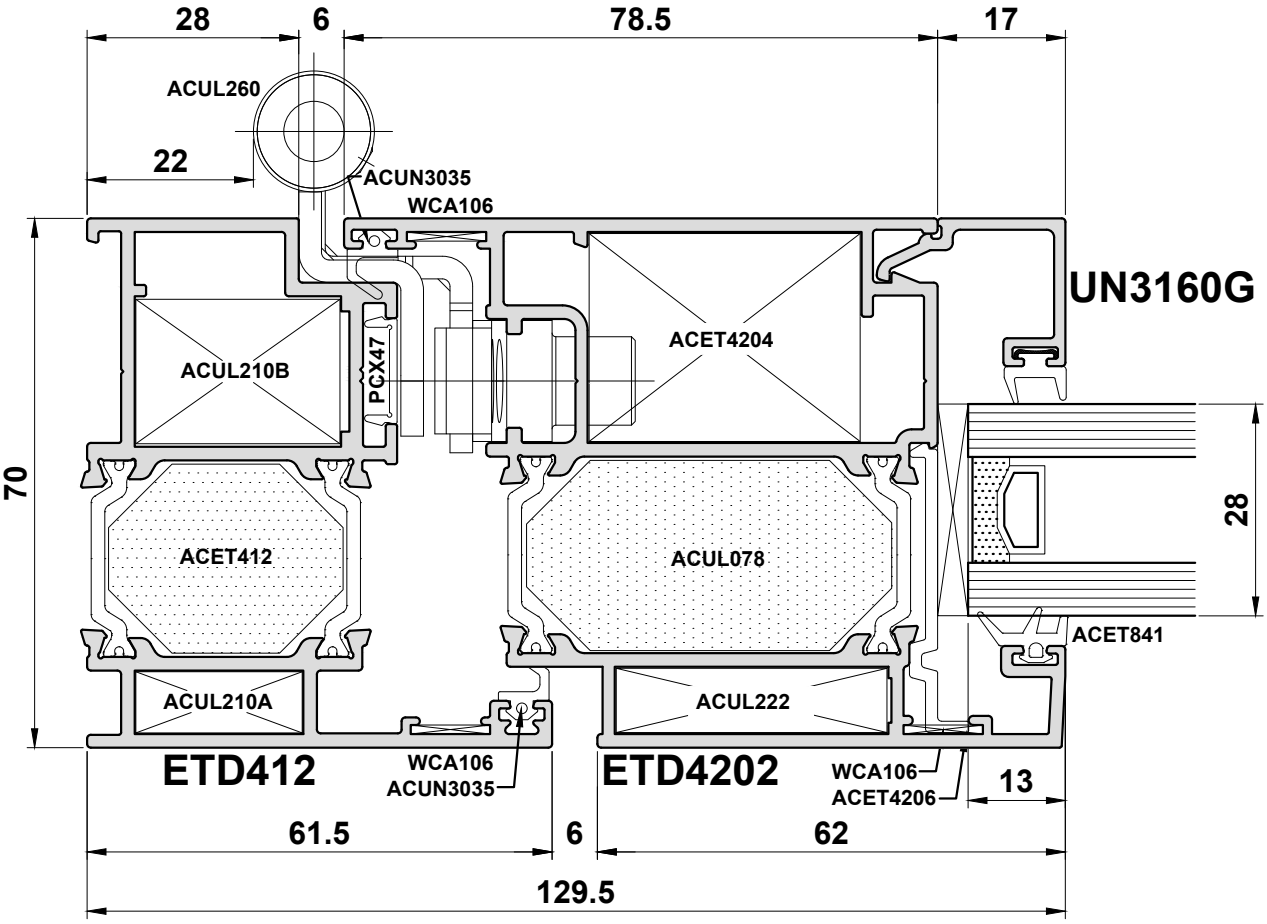

Do Not Scale From This Drawing

Open In - Detail 1b

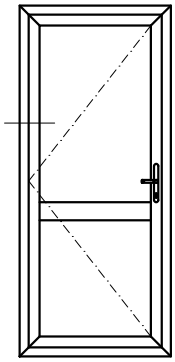

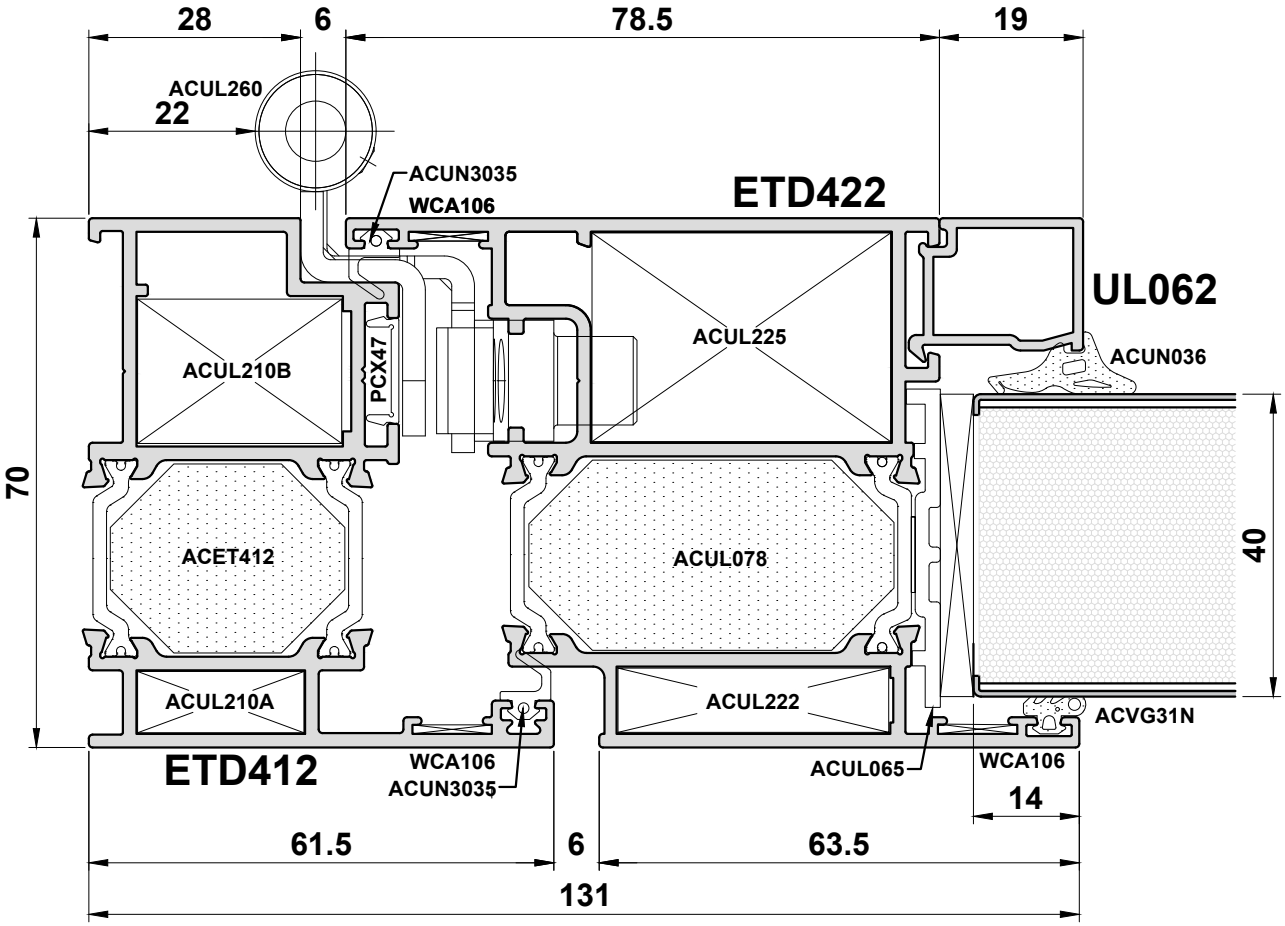

Do Not Scale From This Drawing

Open In - Detail 2a

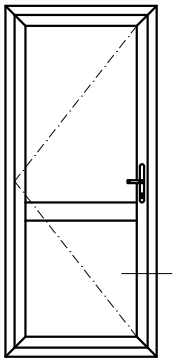

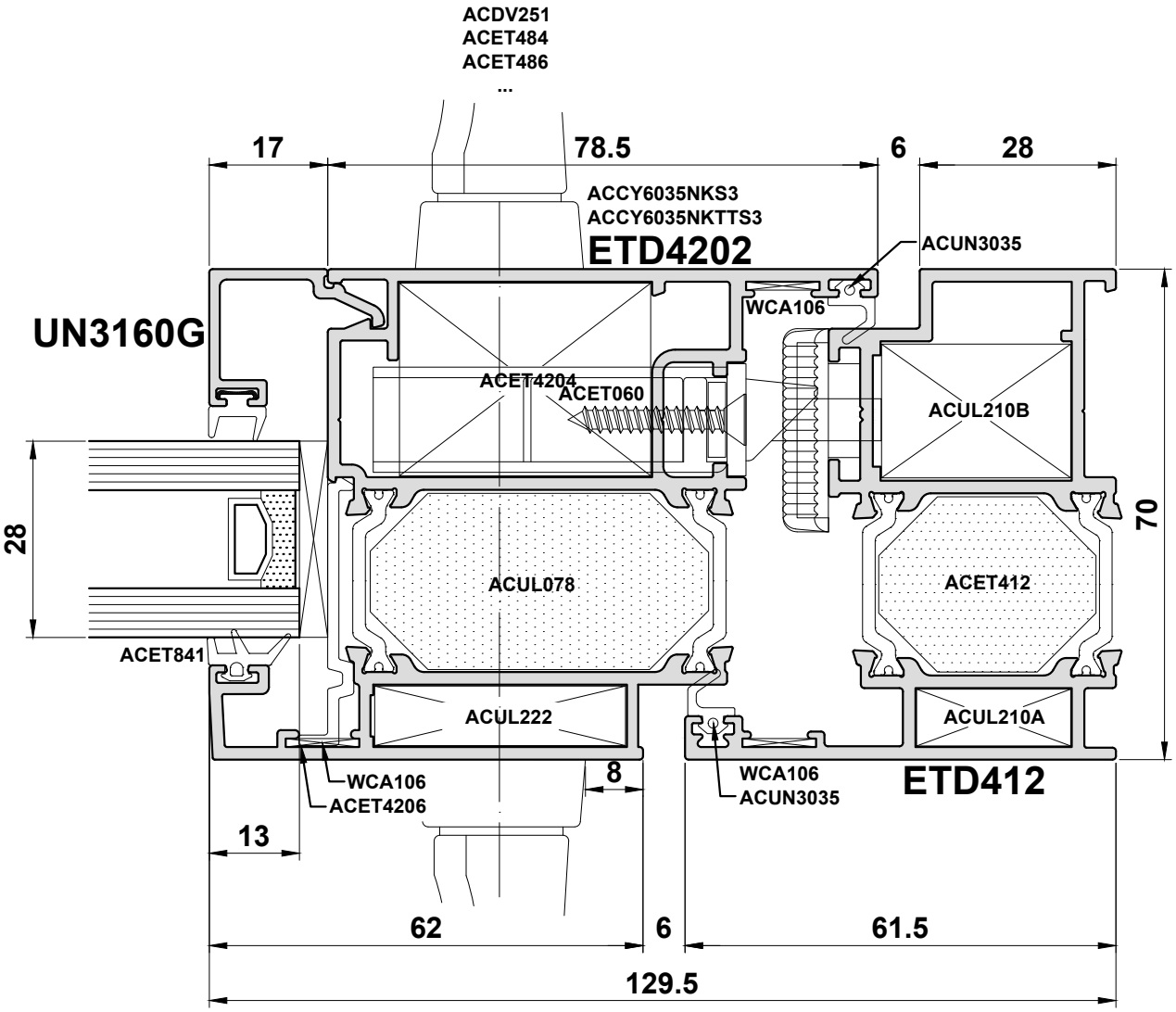

Do Not Scale From This Drawing

Open In - Detail 2b

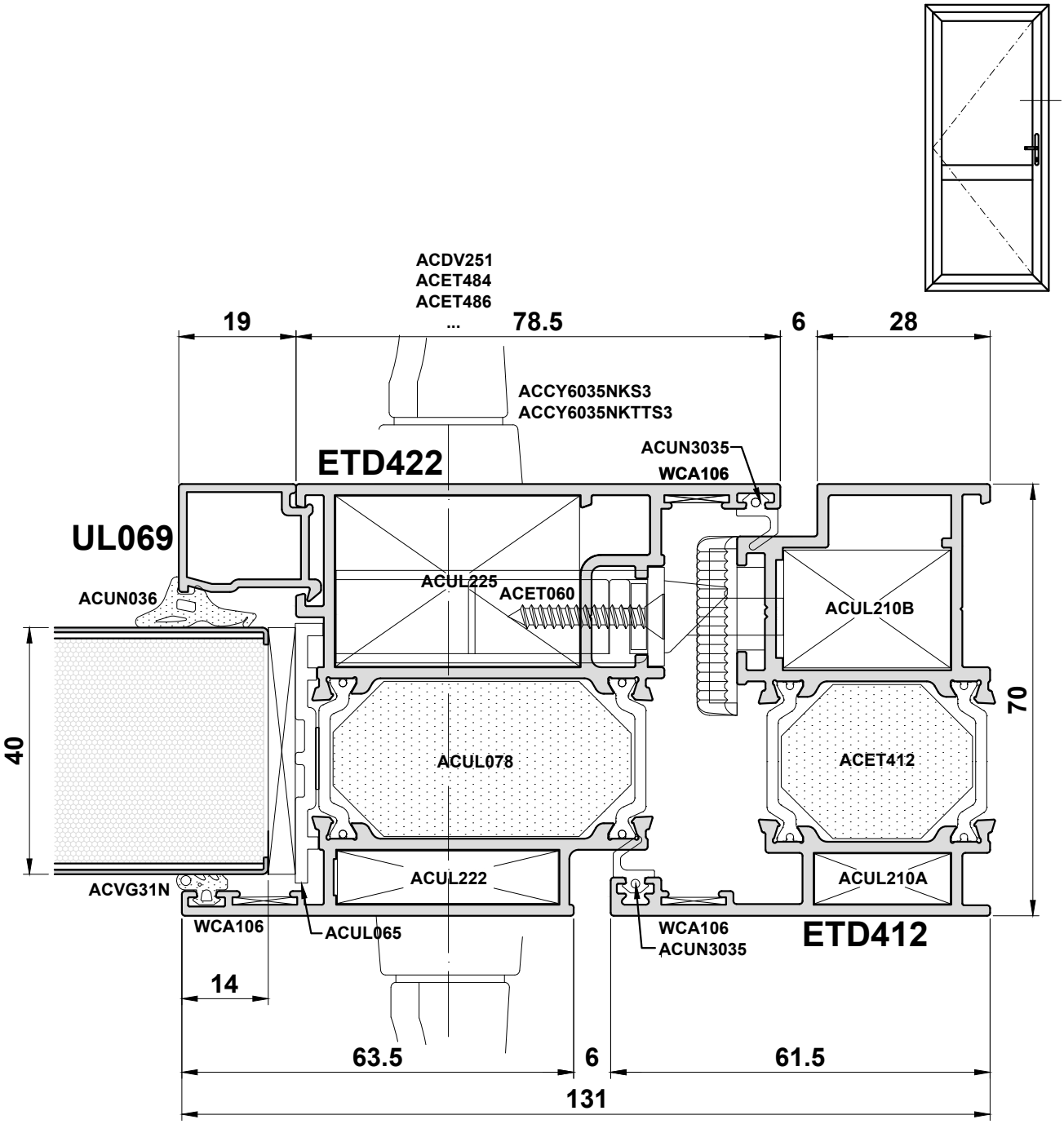

Do Not Scale From This Drawing

Open In - Detail 3a

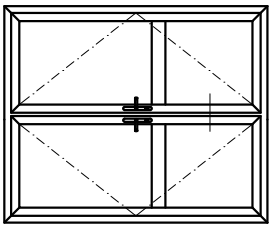

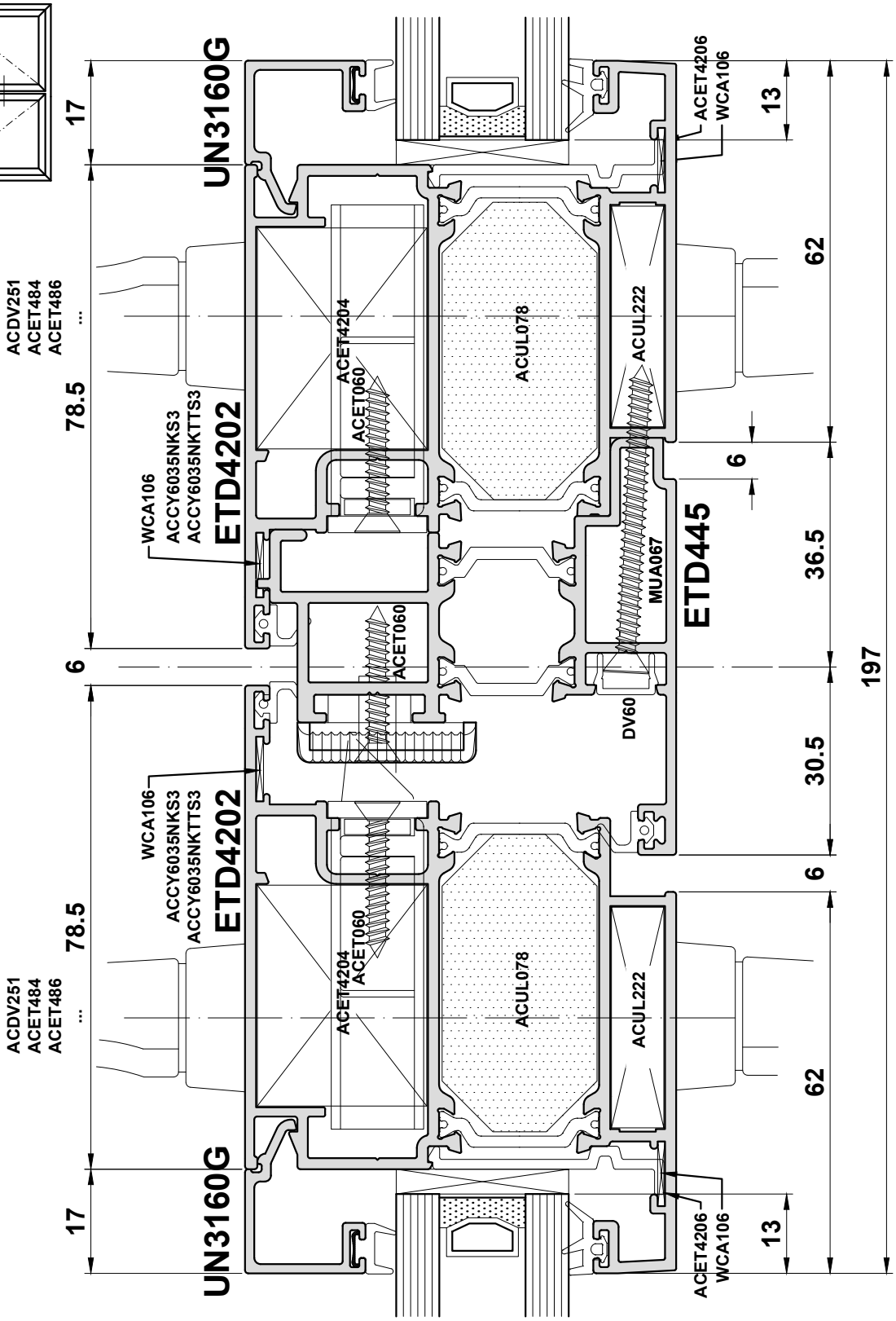

Do Not Scale From This Drawing

Open In - Detail 3b

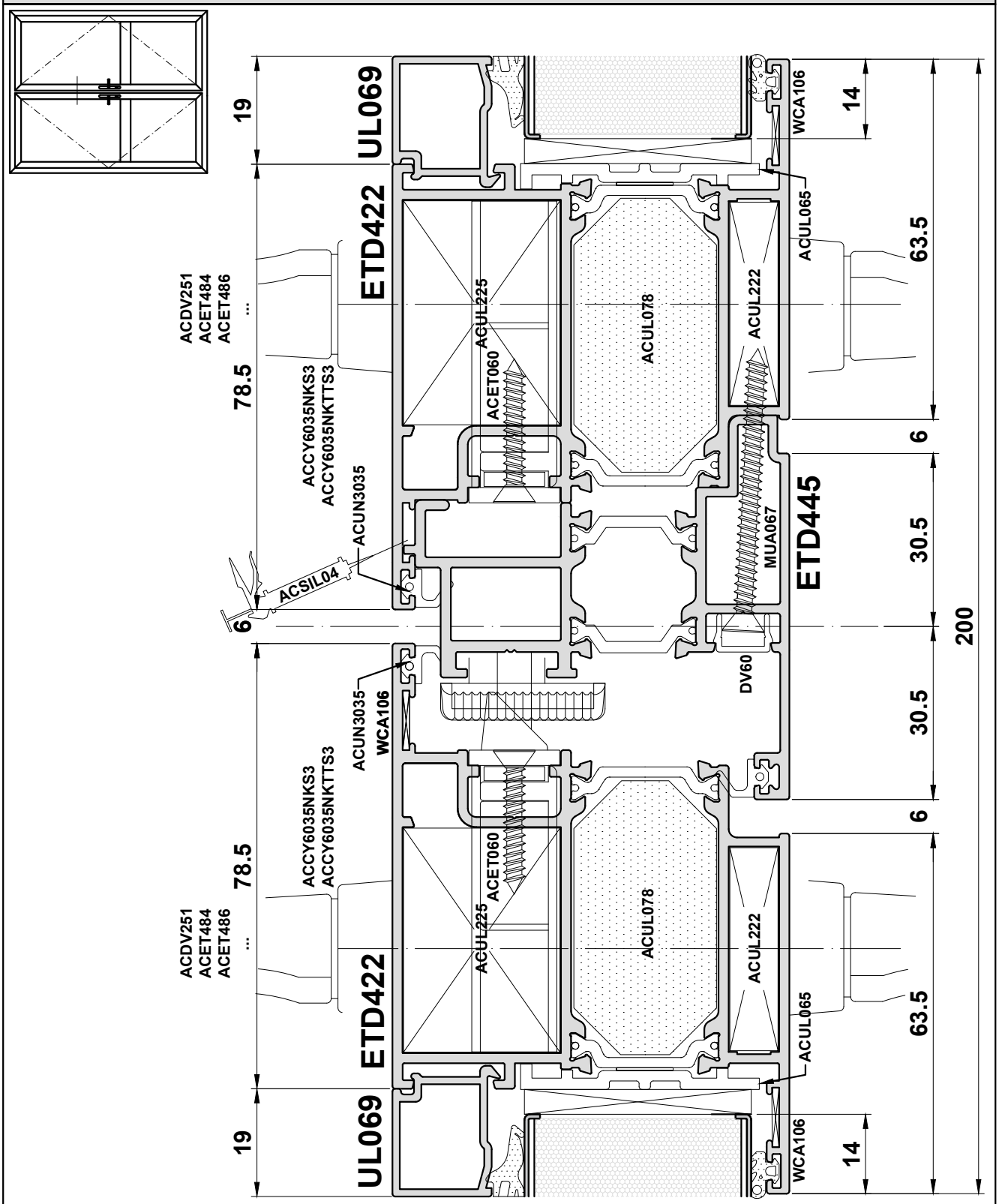

Do Not Scale From This Drawing

Open In - Detail 3c

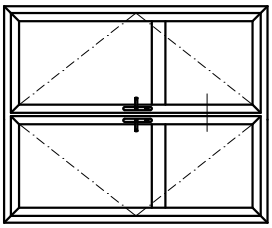

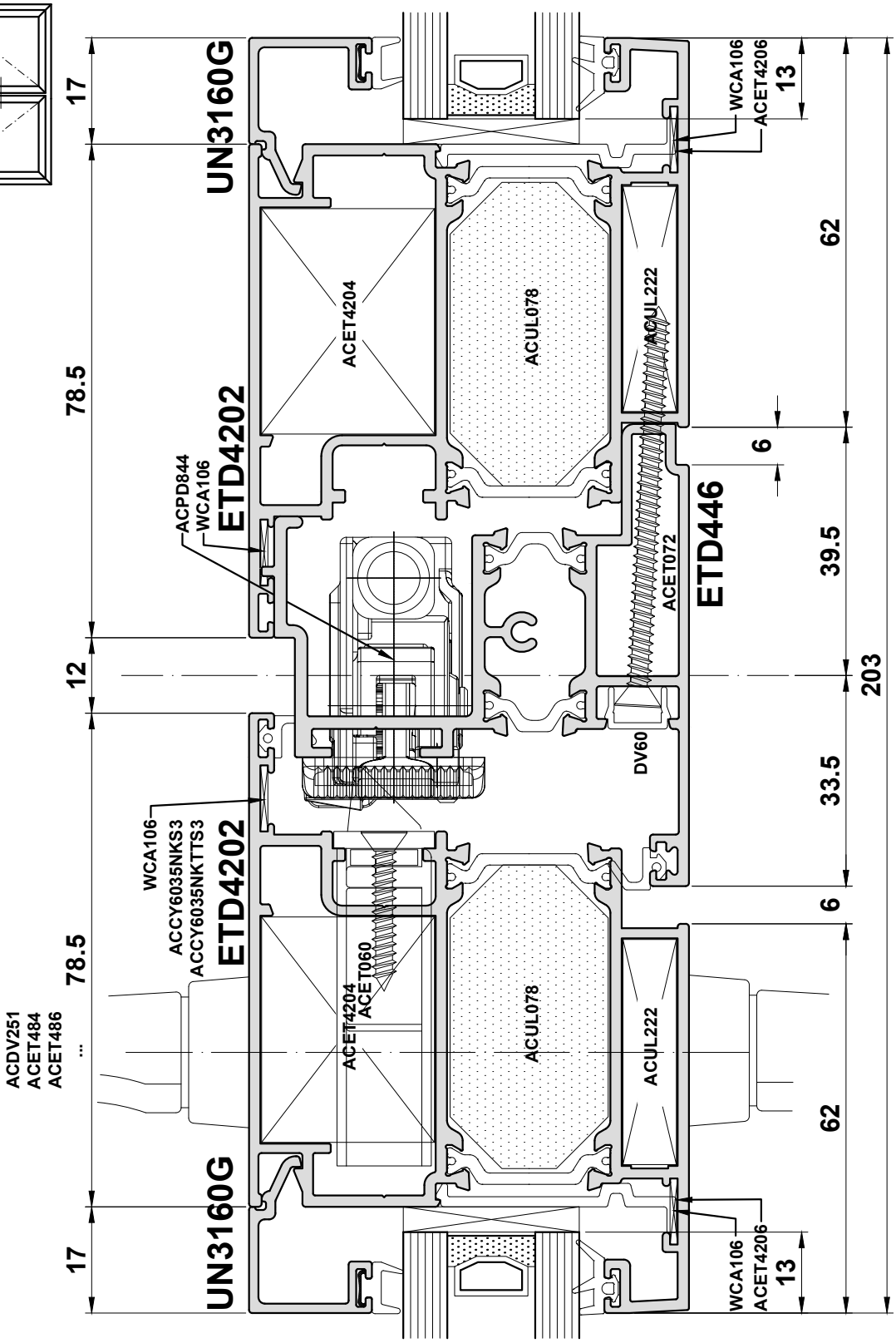

Do Not Scale From This Drawing

Open In - Detail 3d

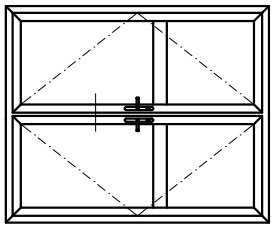

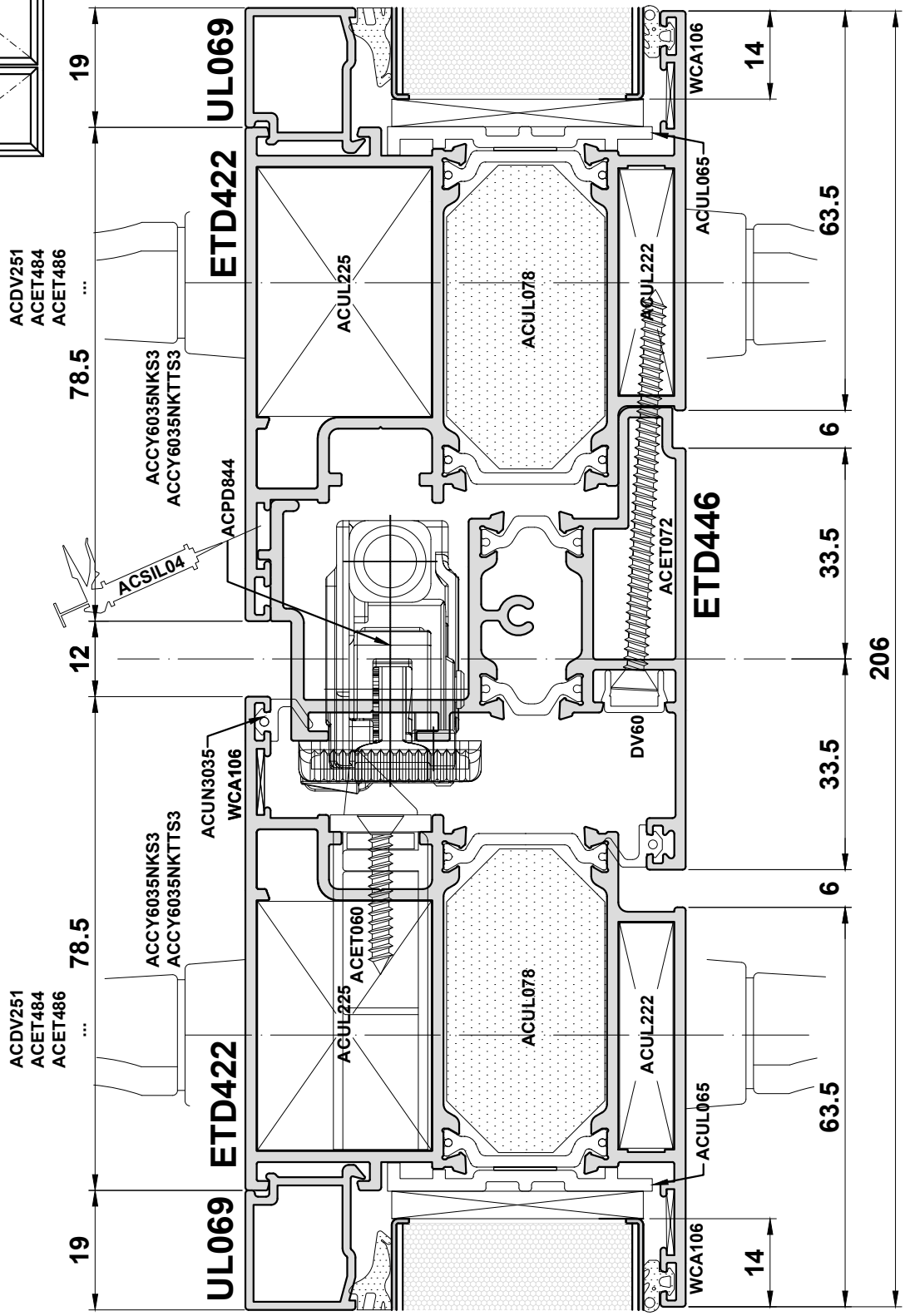

Do Not Scale From This Drawing

Open In - Detail 4a

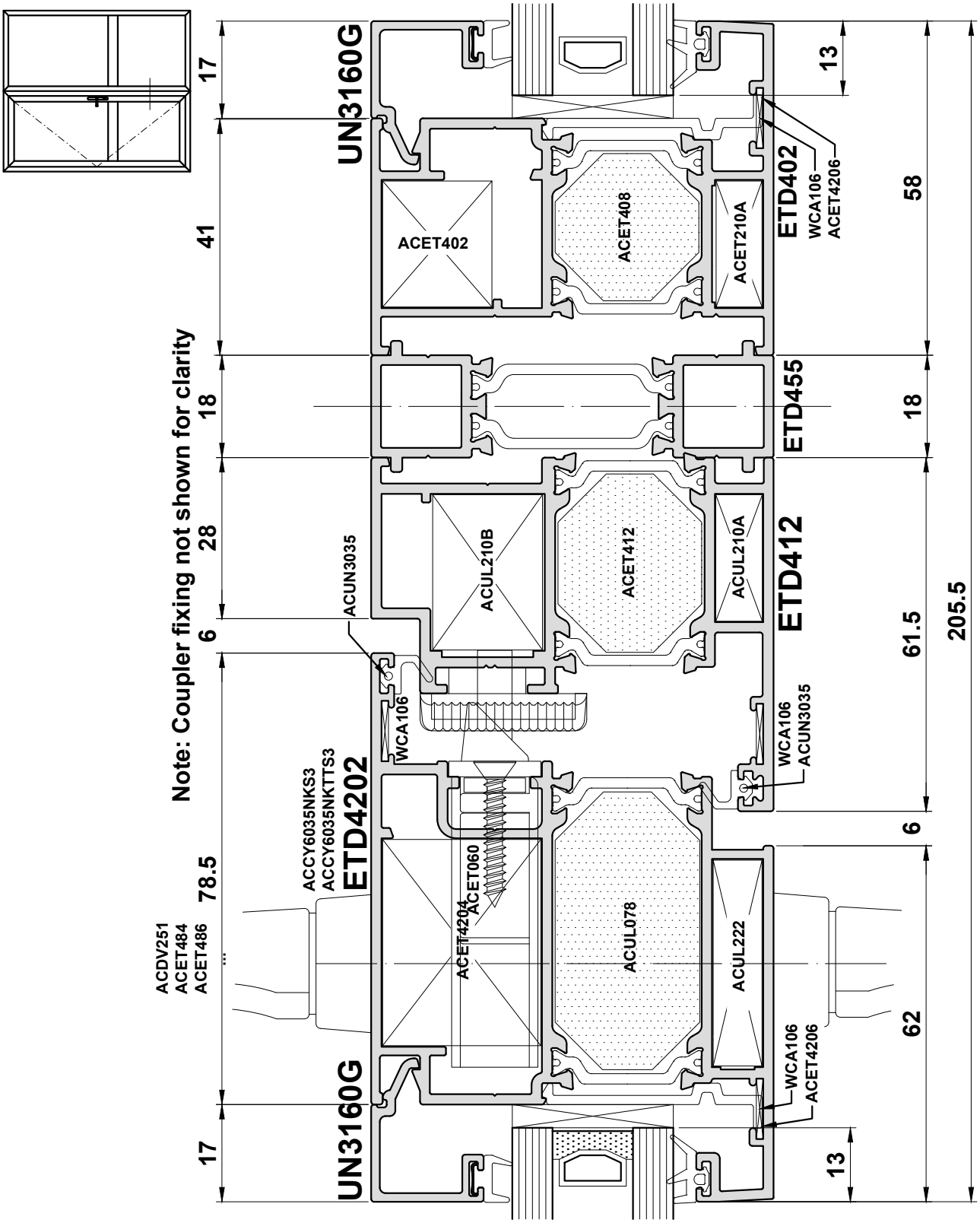

Do Not Scale From This Drawing

Open In - Detail 4b

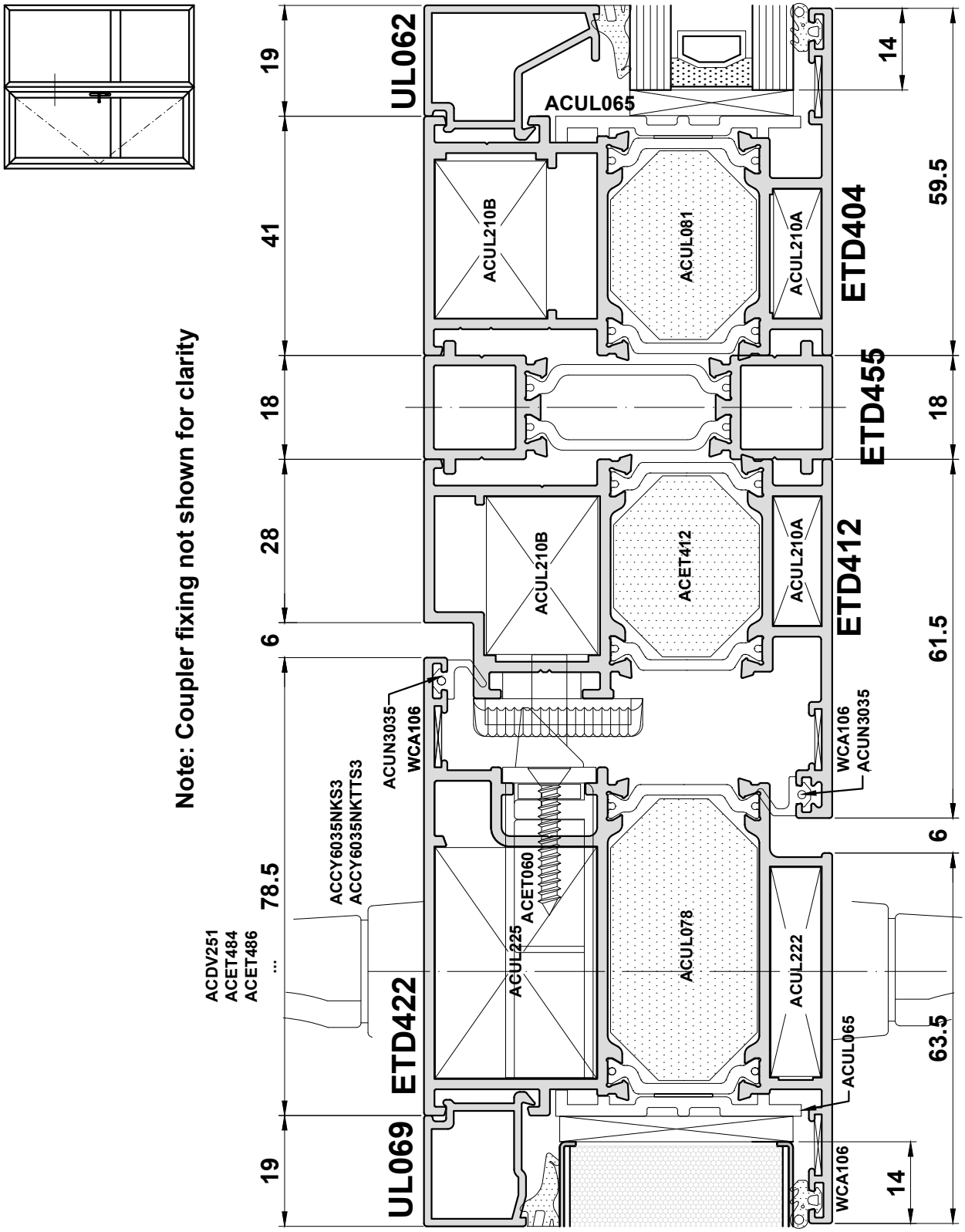

Note: Coupler fixing not shown for clarity

Do Not Scale From This Drawing

Open In - Detail 5a

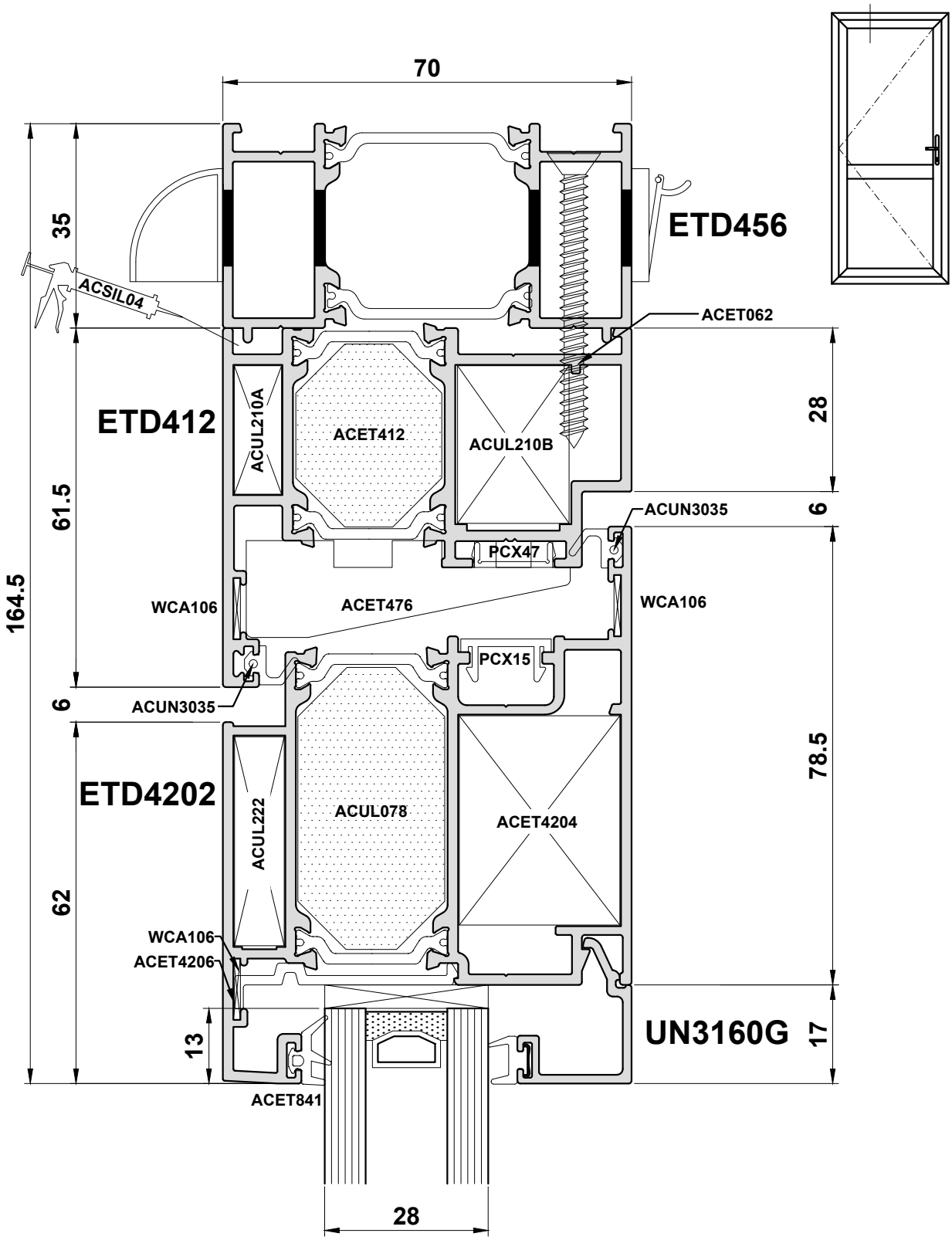

Do Not Scale From This Drawing

Open In - Detail 5b

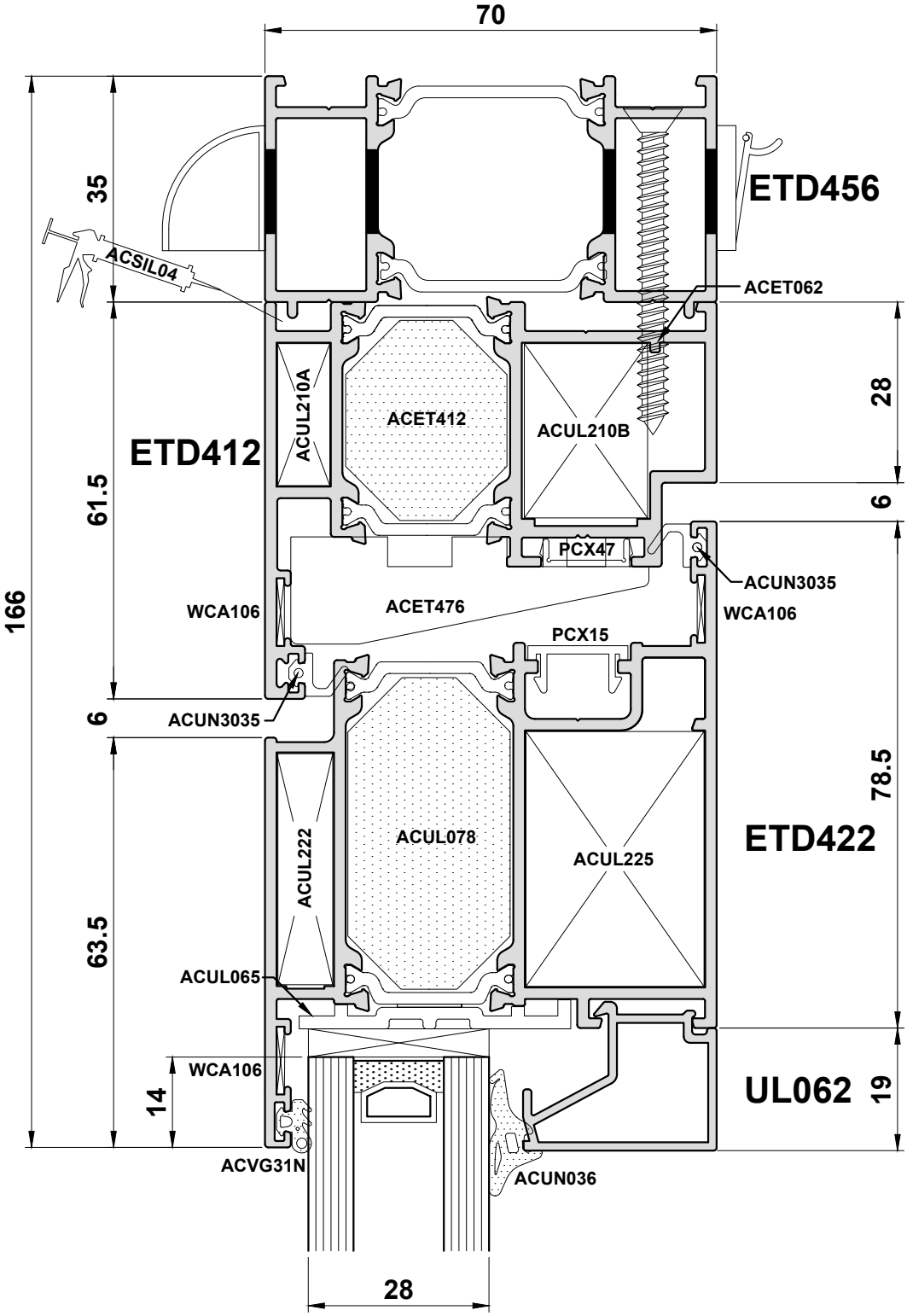

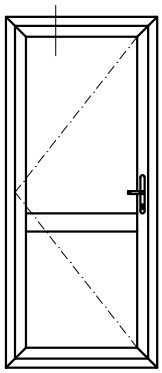

Do Not Scale From This Drawing

Open In - Detail 6a

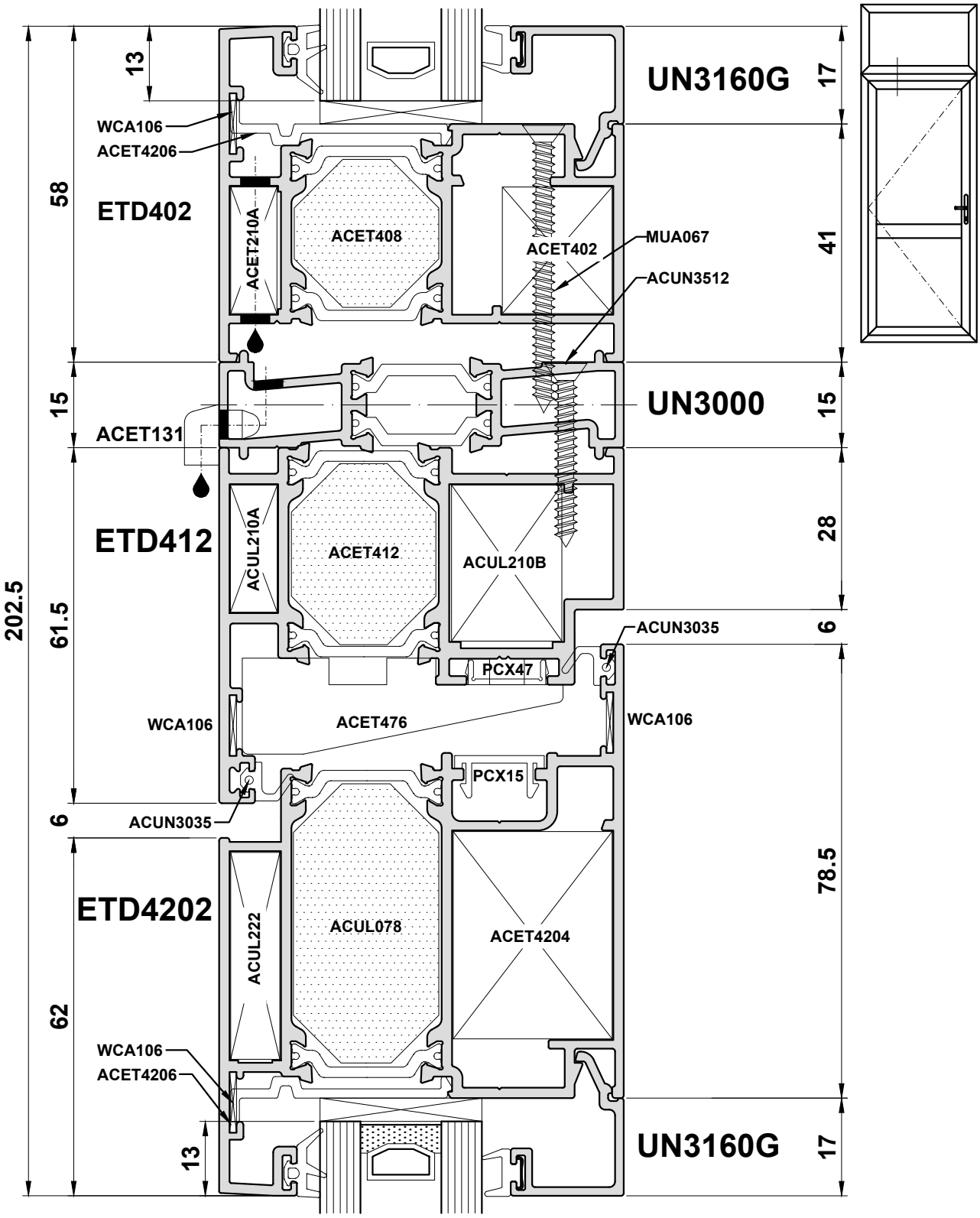

Do Not Scale From This Drawing

Open In - Detail 6b

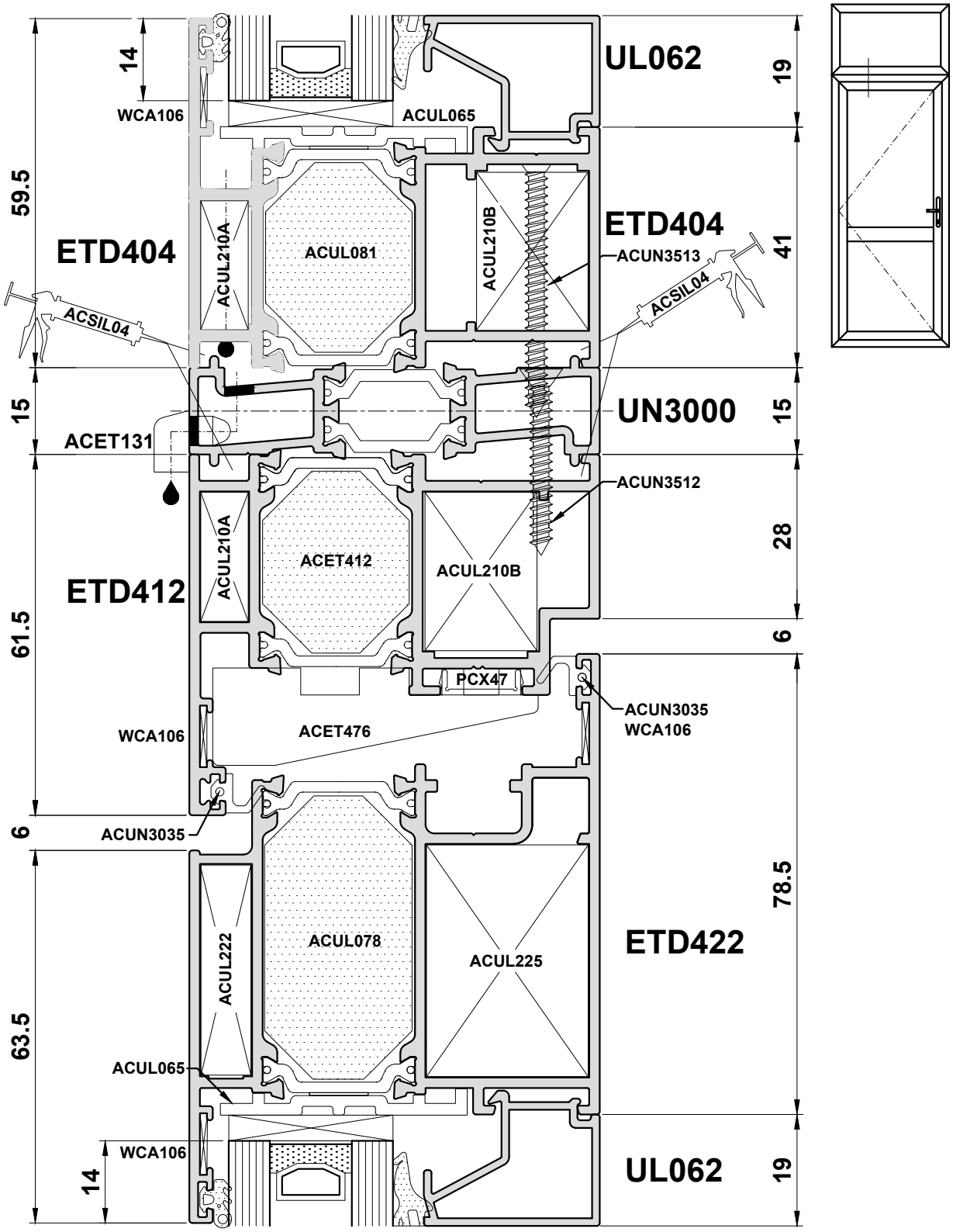

Do Not Scale From This Drawing

Open In - Detail 7a

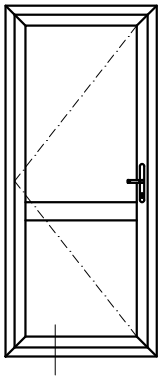

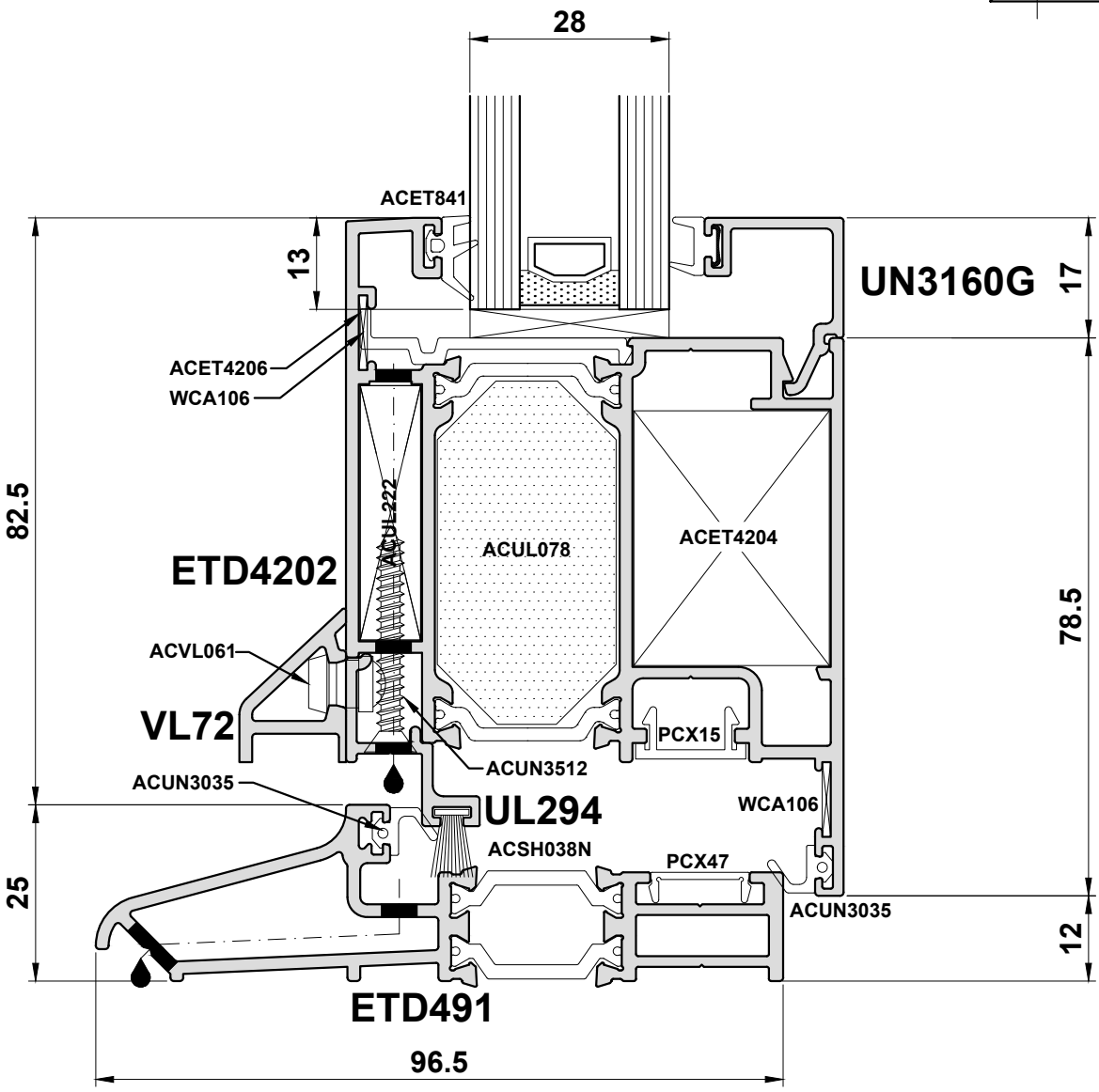

Do Not Scale From This Drawing

Open In - Detail 7b

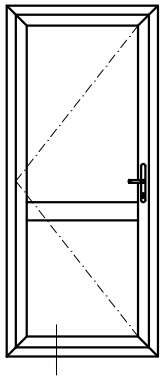

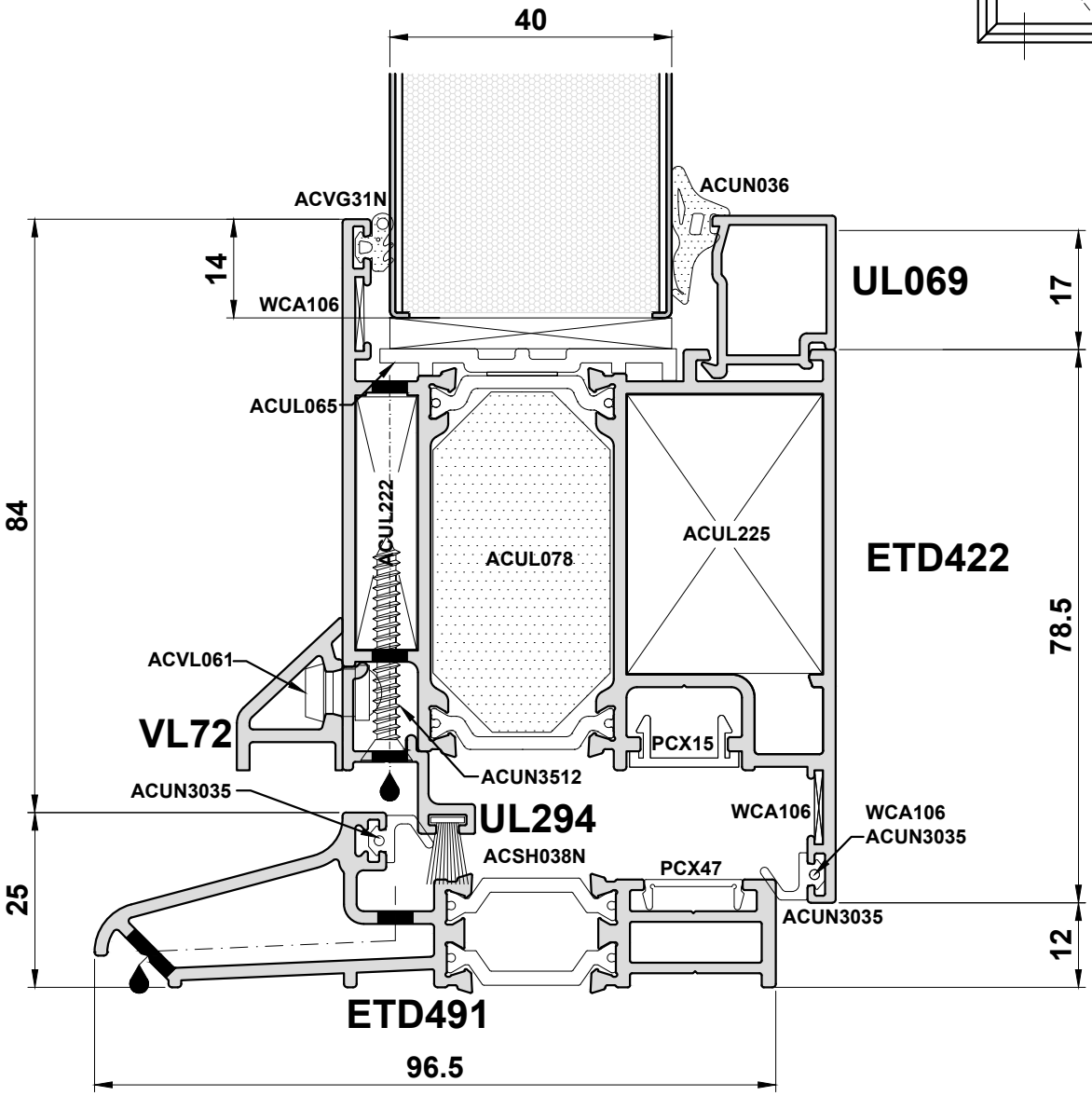

Do Not Scale From This Drawing

Open In - Detail 7c

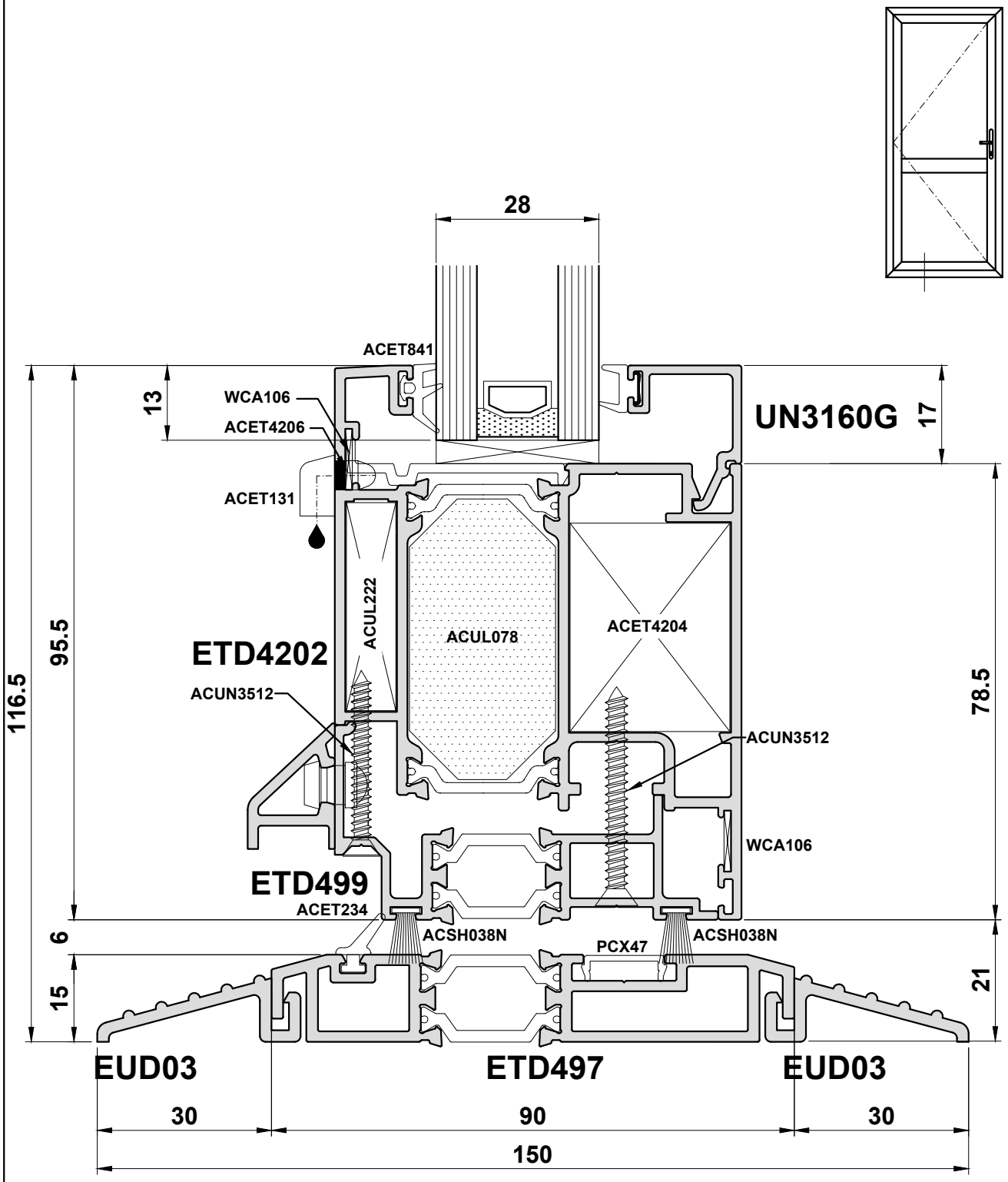

Do Not Scale From This Drawing

Open In - Detail 7d

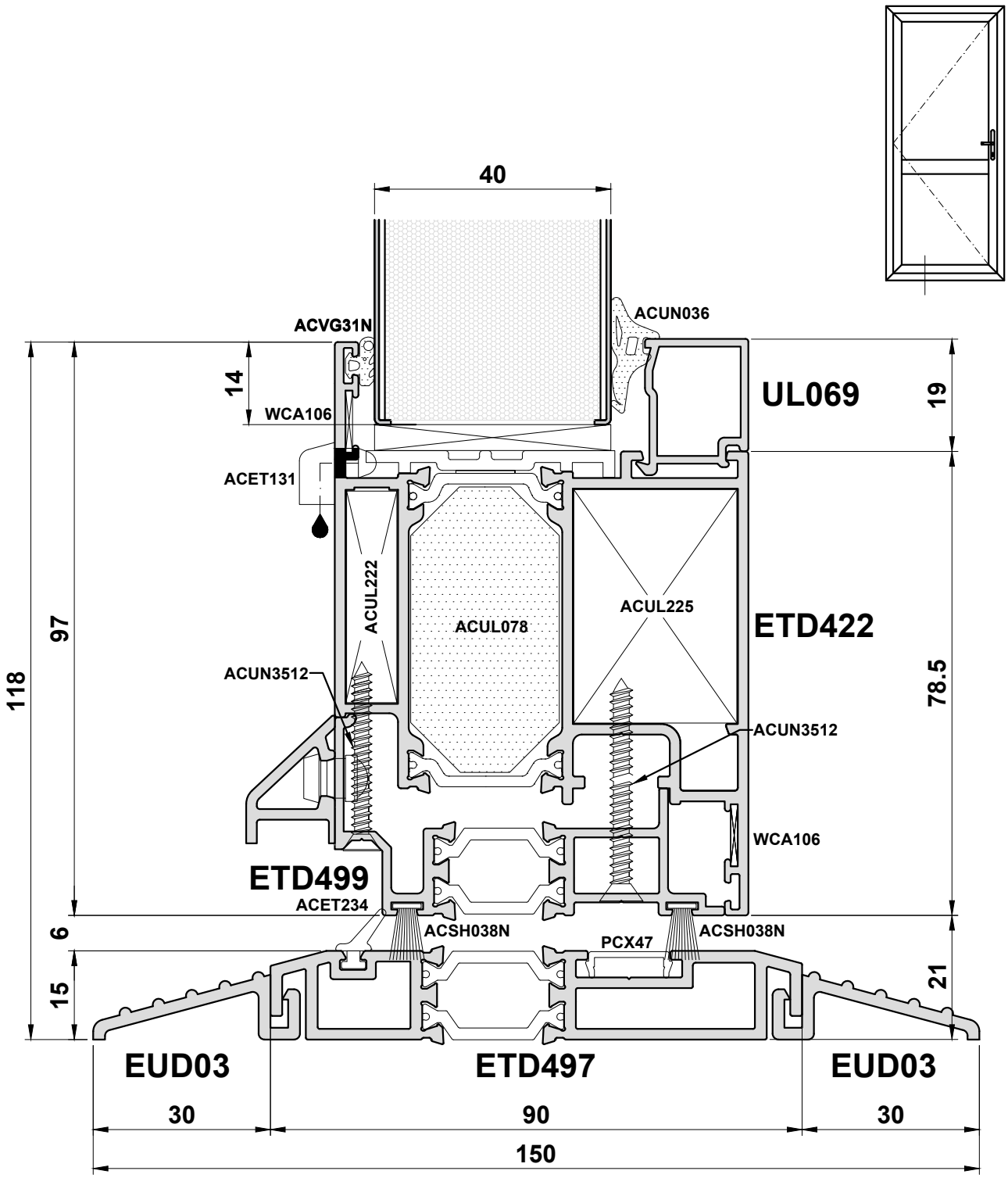

Do Not Scale From This Drawing

Open In - Detail 7e

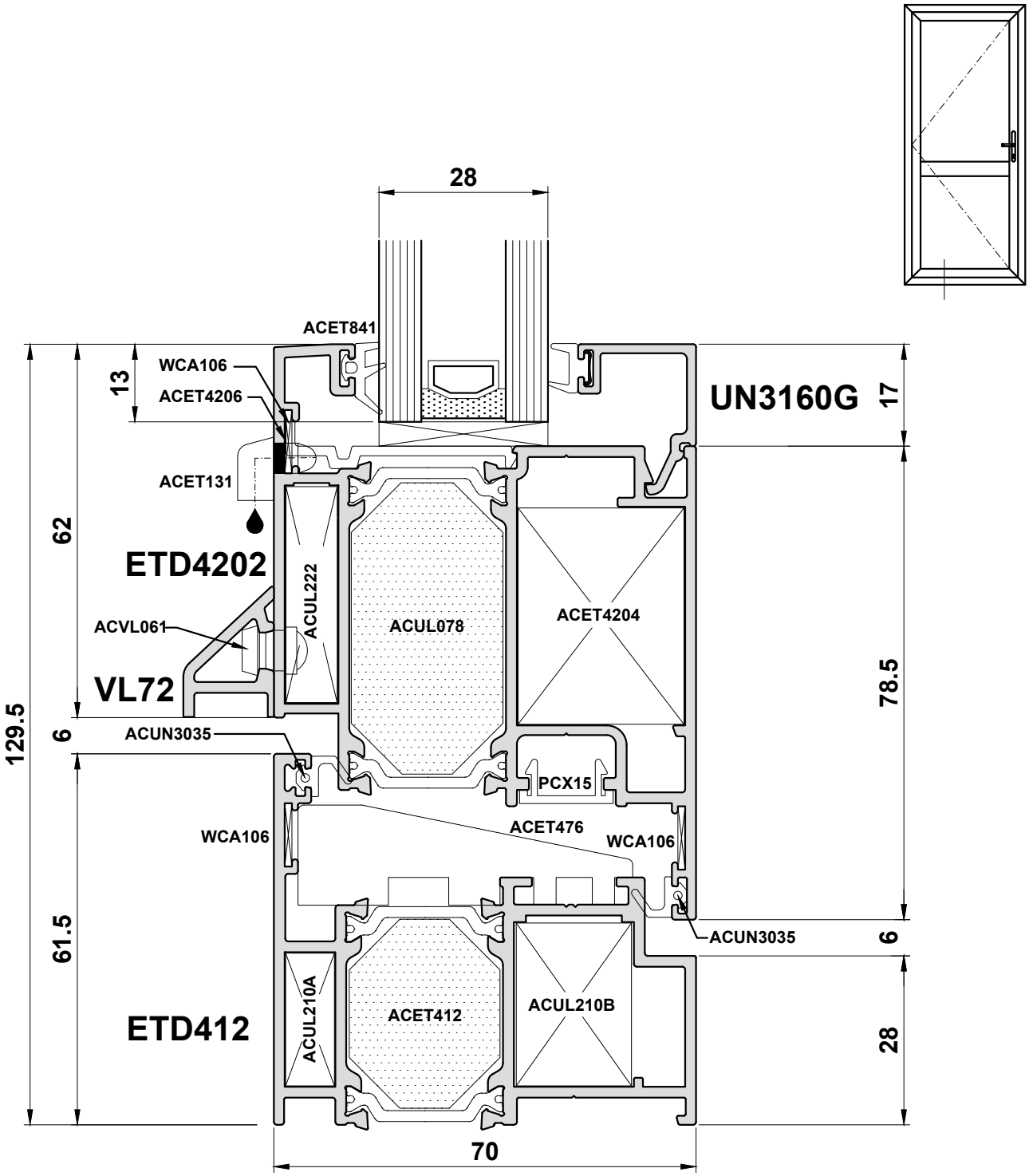

Do Not Scale From This Drawing

Open In - Detail 7f

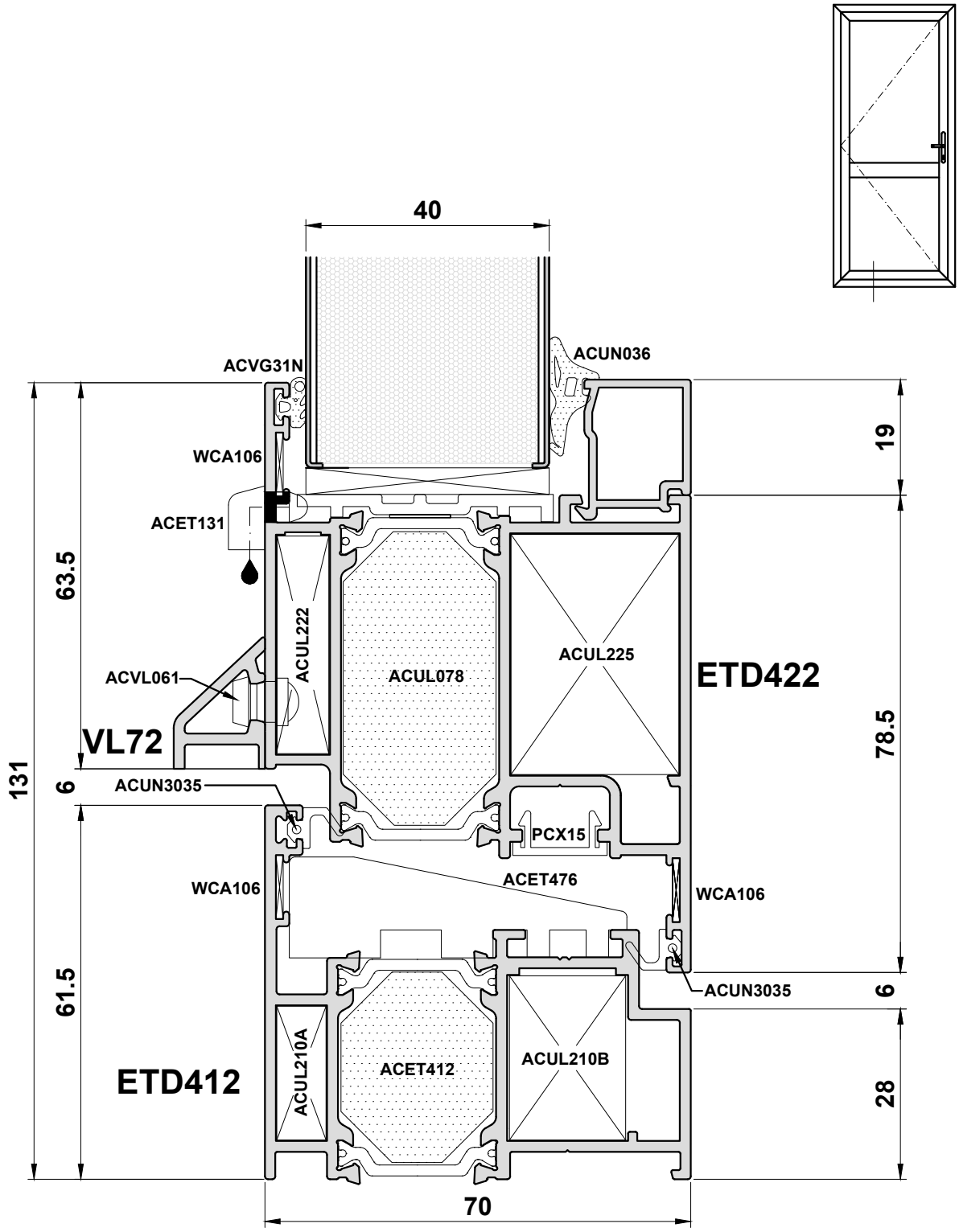

Do Not Scale From This Drawing

Open In - Detail 8a

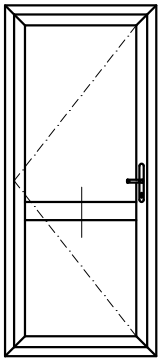

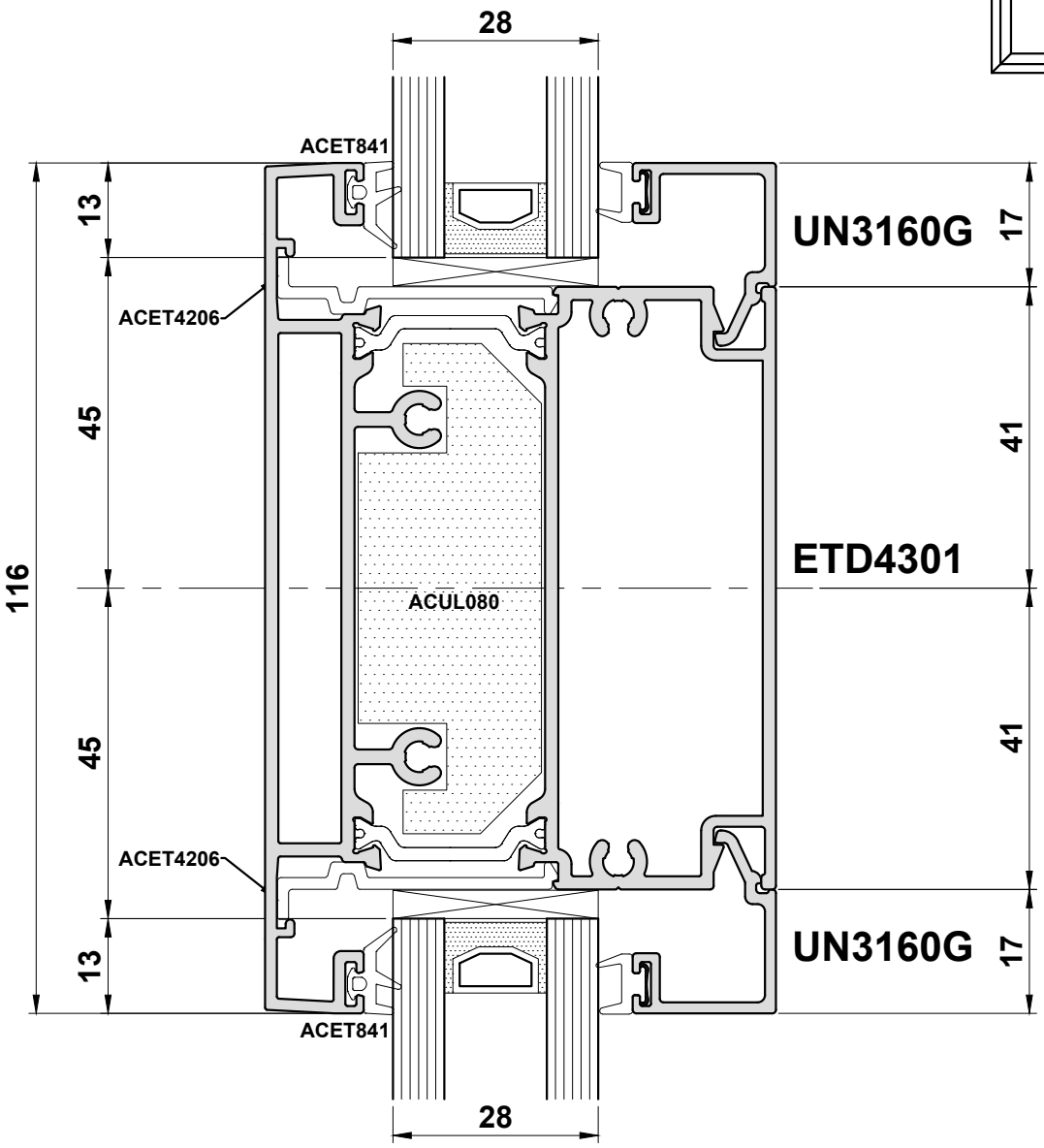

Do Not Scale From This Drawing

Open In - Detail 8b

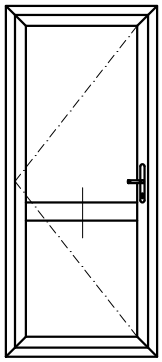

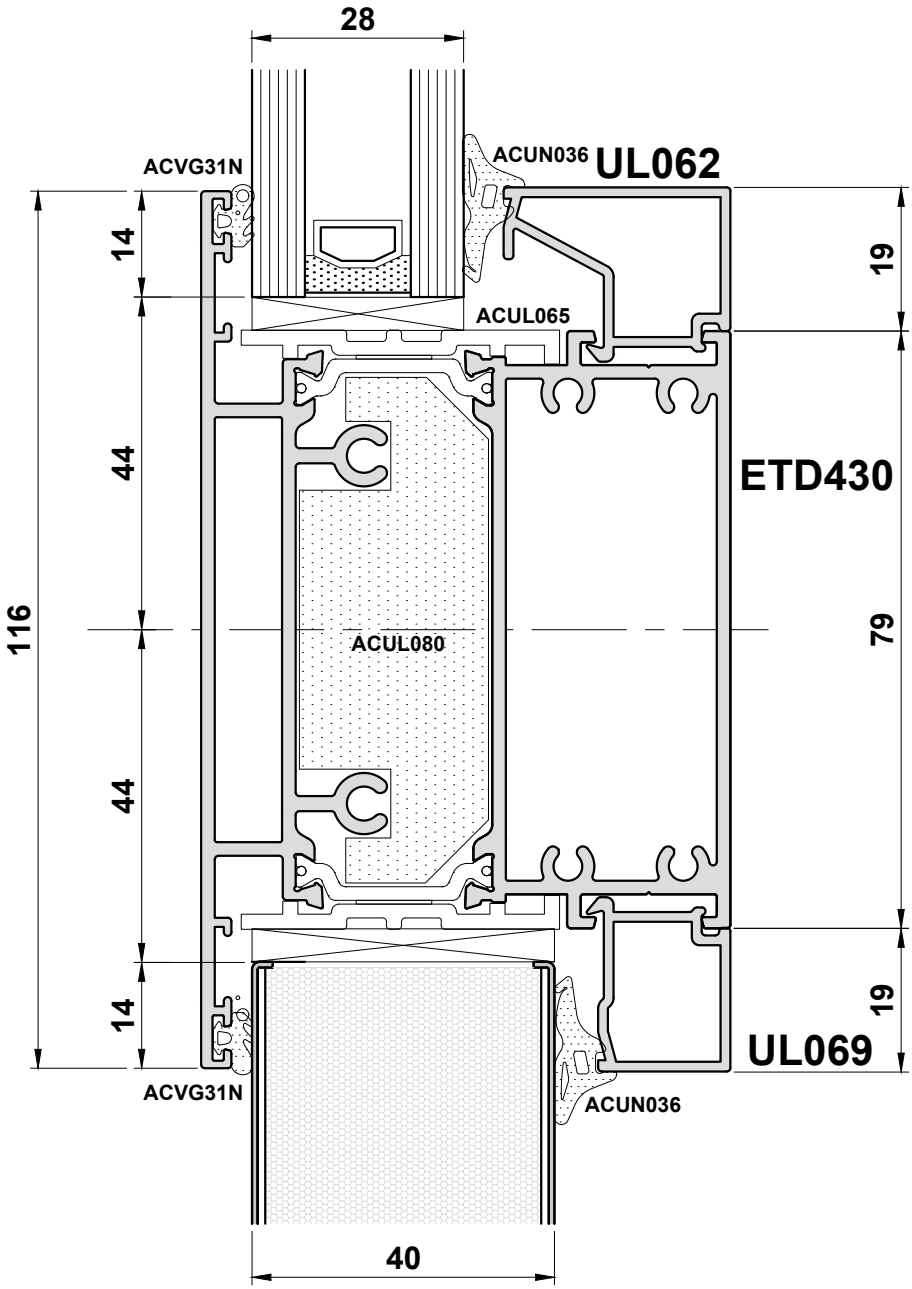

Do Not Scale From This Drawing

Open In - Detail 9a

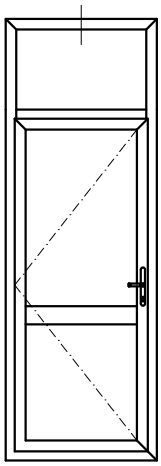

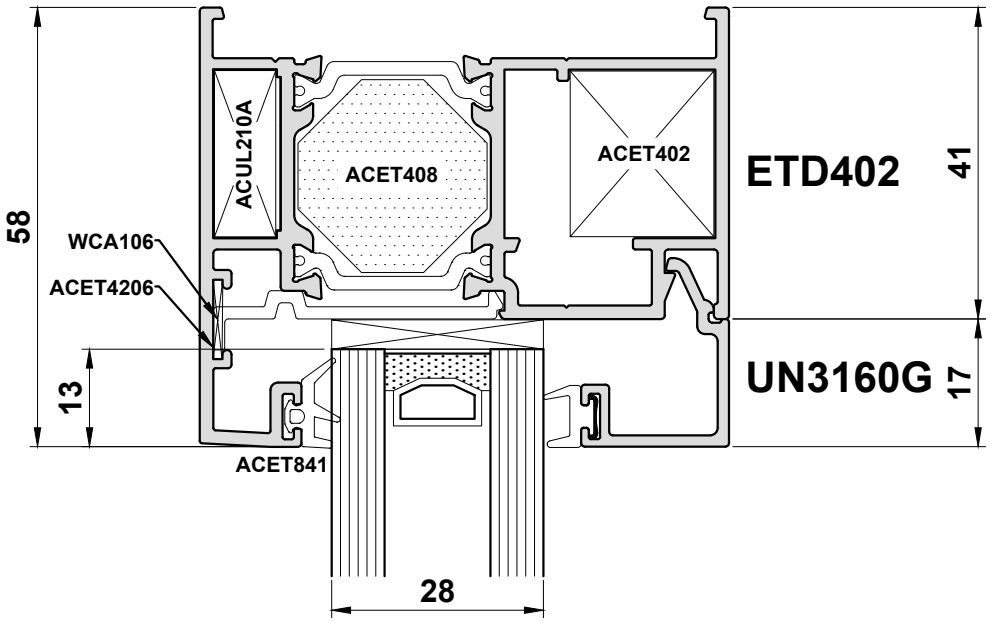

Do Not Scale From This Drawing

Open In - Detail 9b

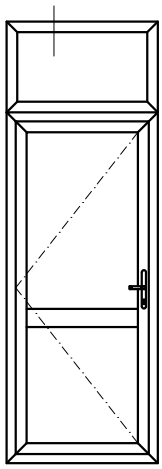

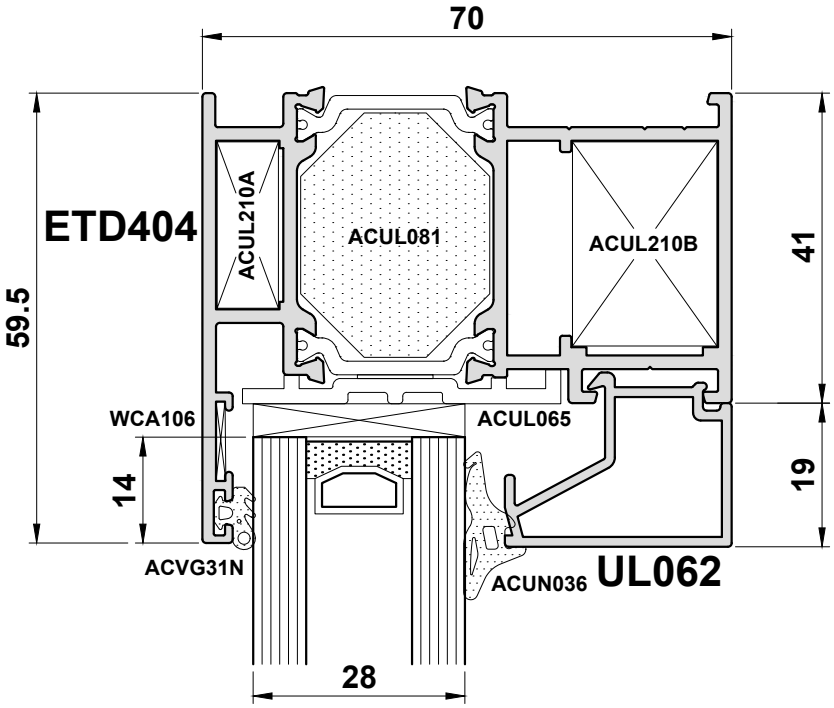

Do Not Scale From This Drawing

Open Out Quick-Glaze Bead - Elevations

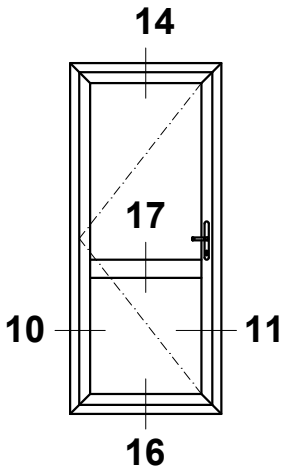

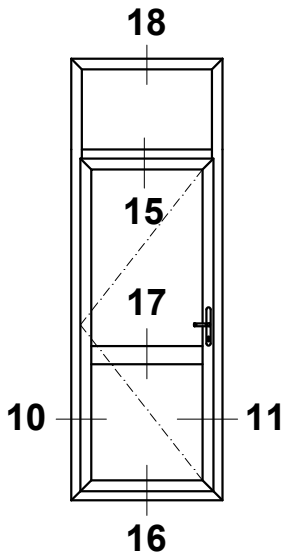

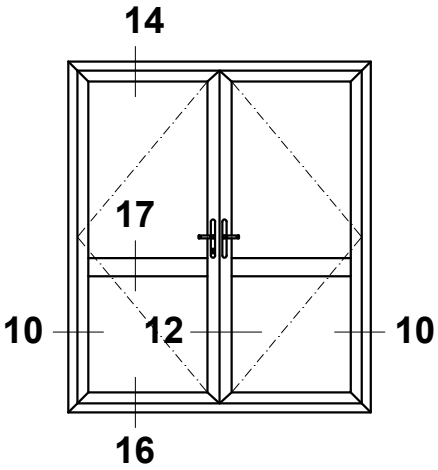

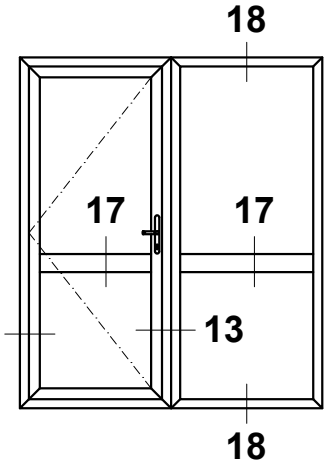

Do Not Scale From This Drawing

Open Out - Detail 10

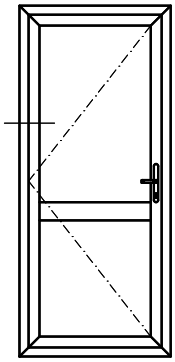

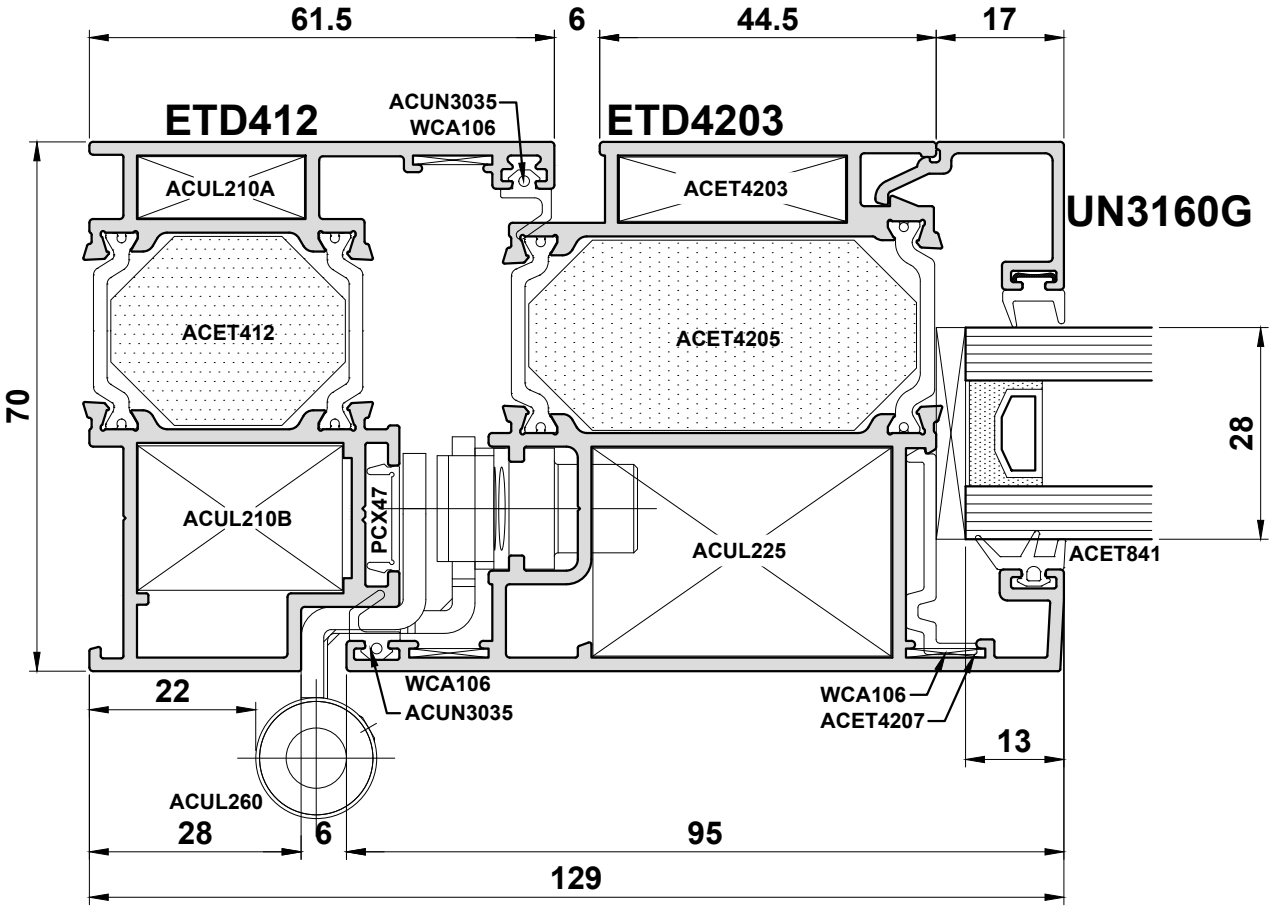

Do Not Scale From This Drawing

Open Out - Detail 11

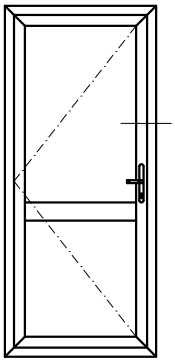

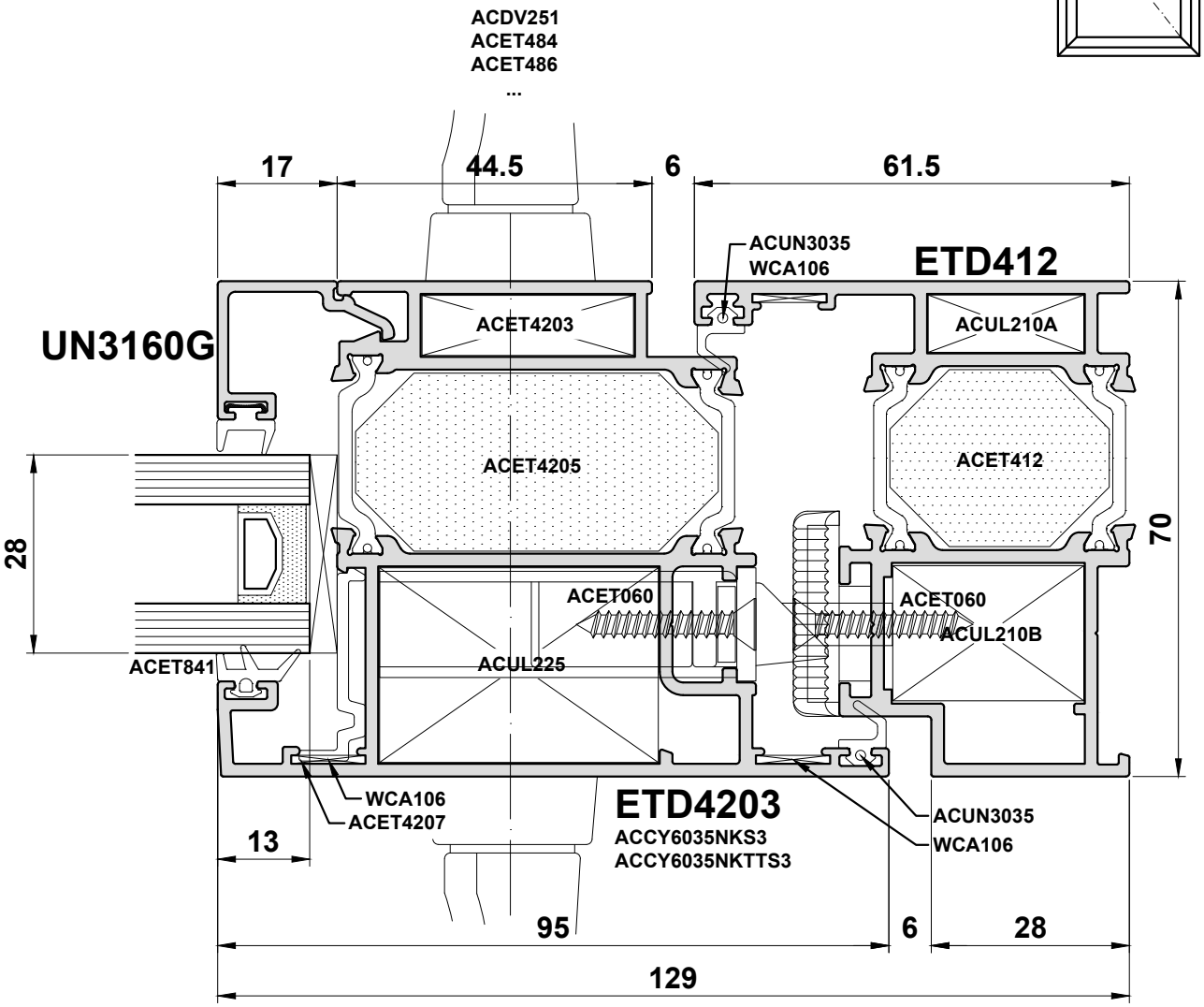

Do Not Scale From This Drawing

Open Out - Detail 12a

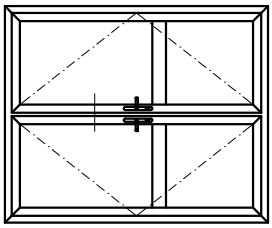

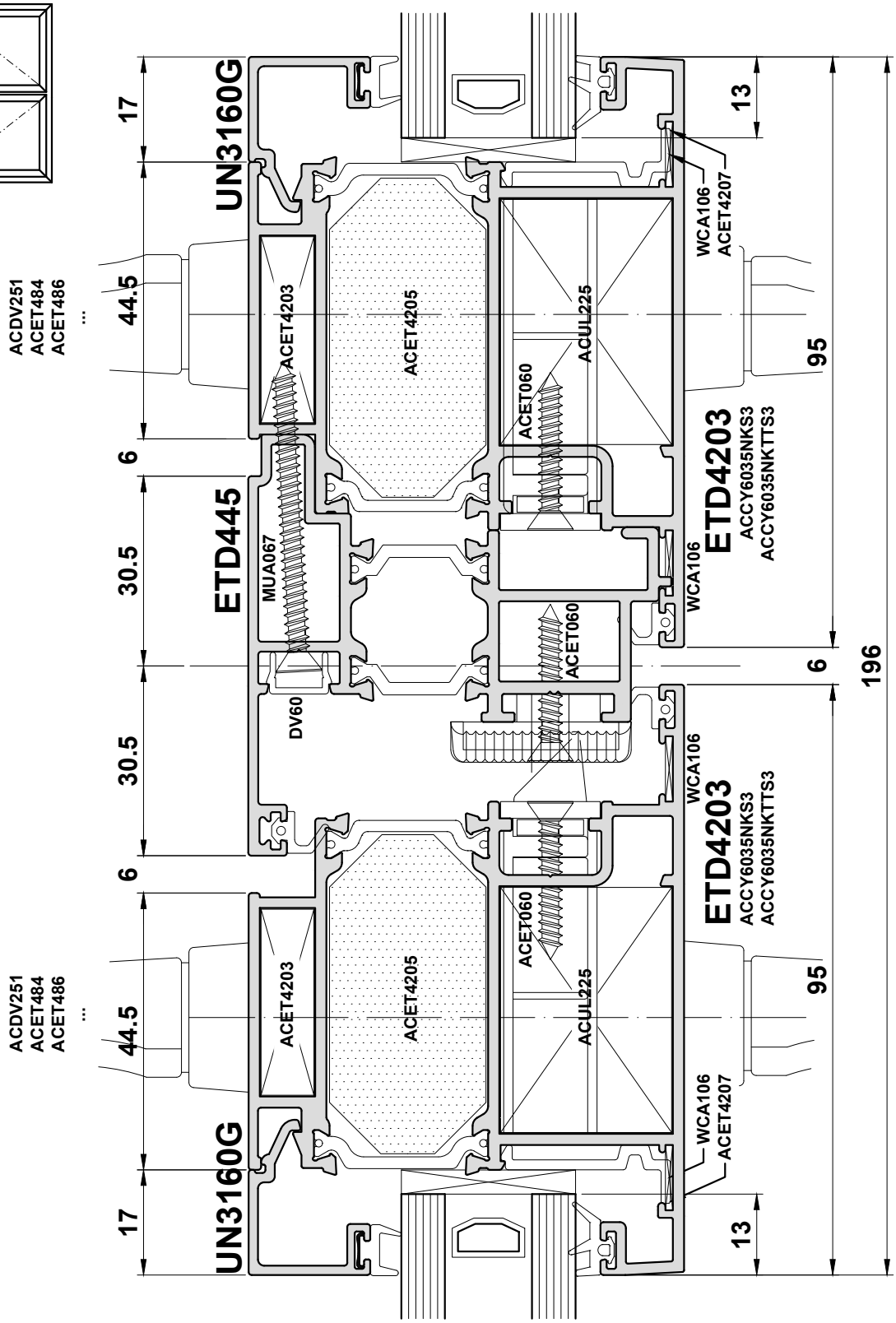

Do Not Scale From This Drawing

Open Out - Detail 12b

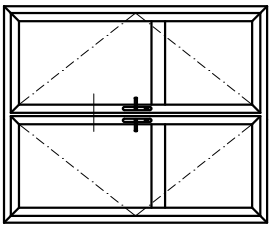

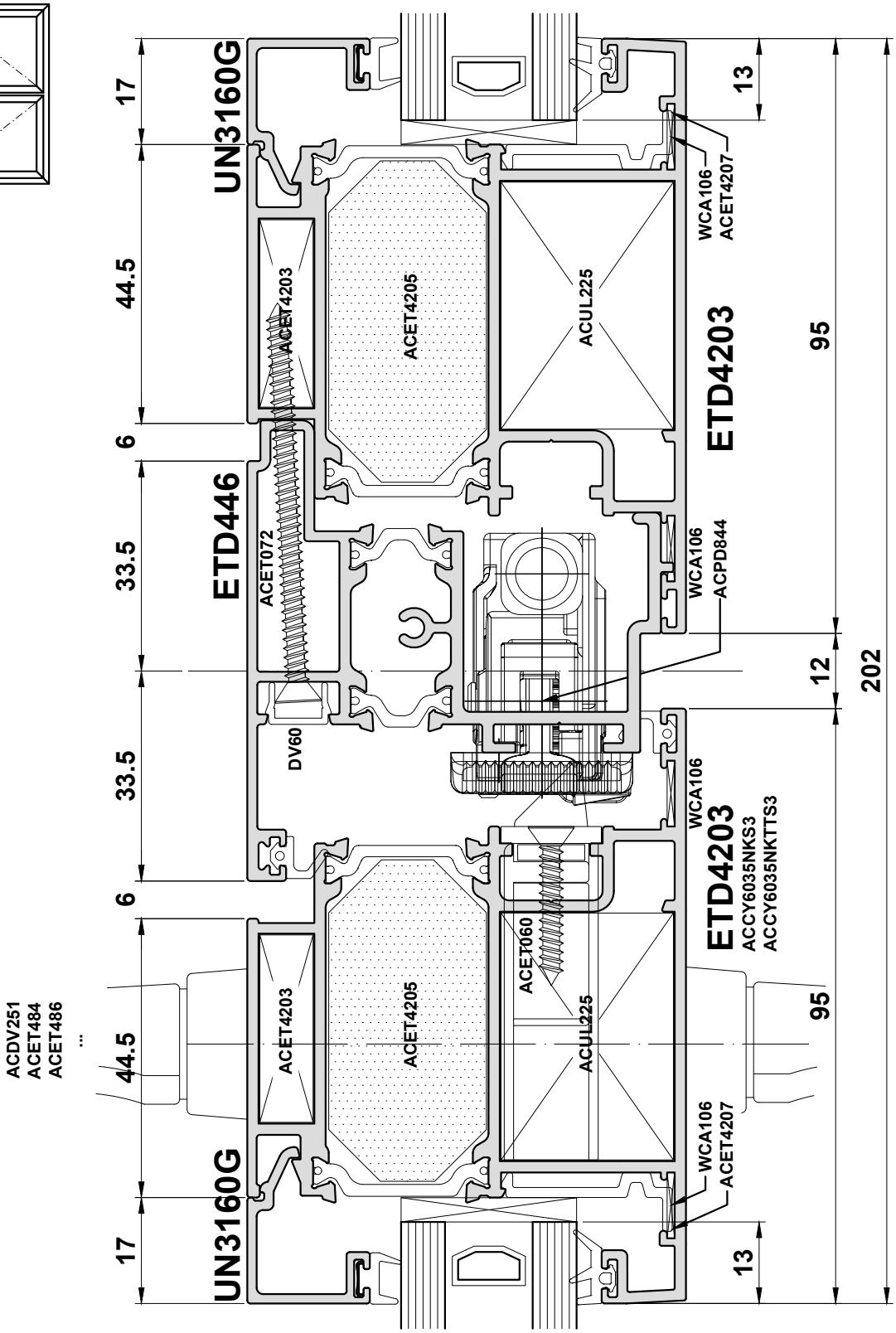

Do Not Scale From This Drawing

Open Out - Detail 13

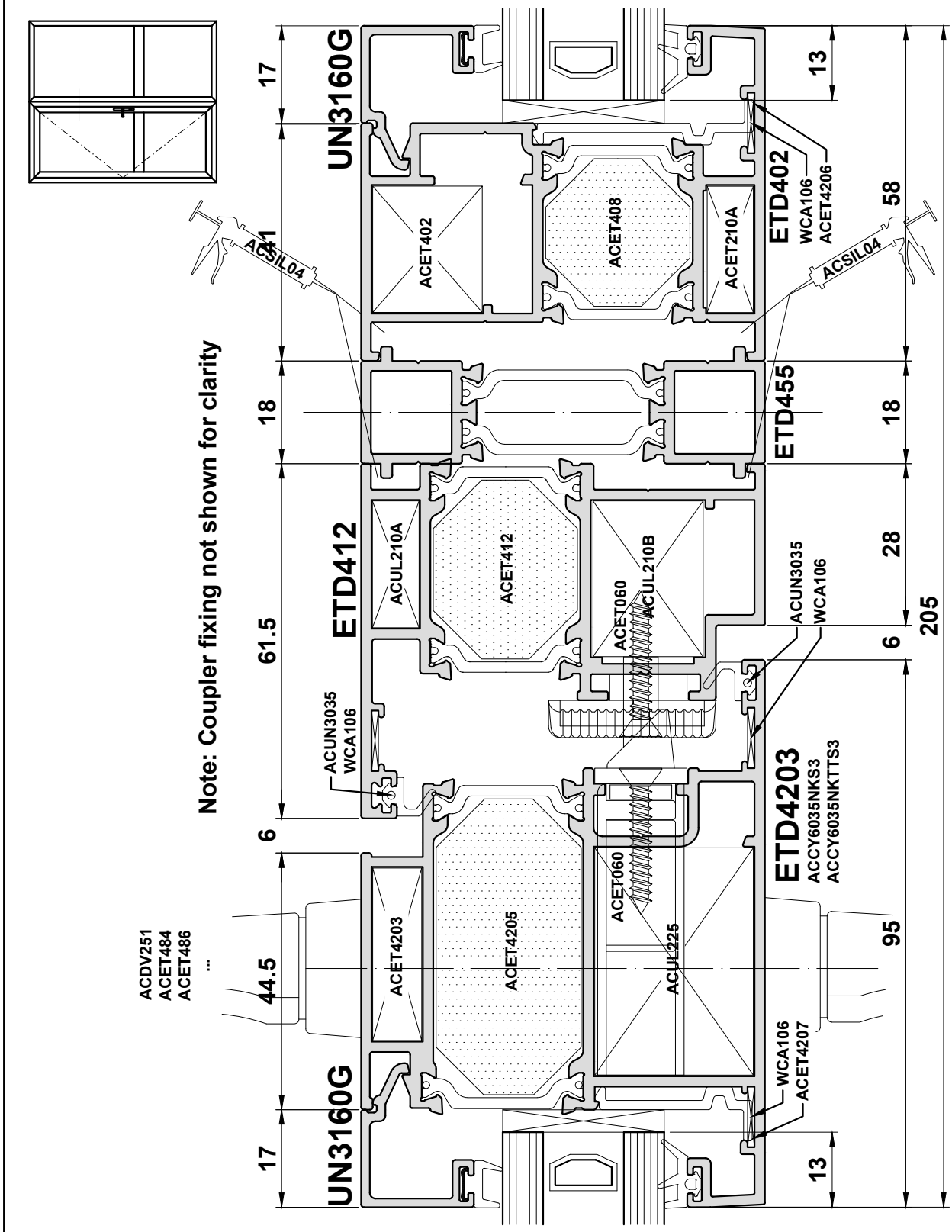

Do Not Scale From This Drawing

Open Out - Detail 14

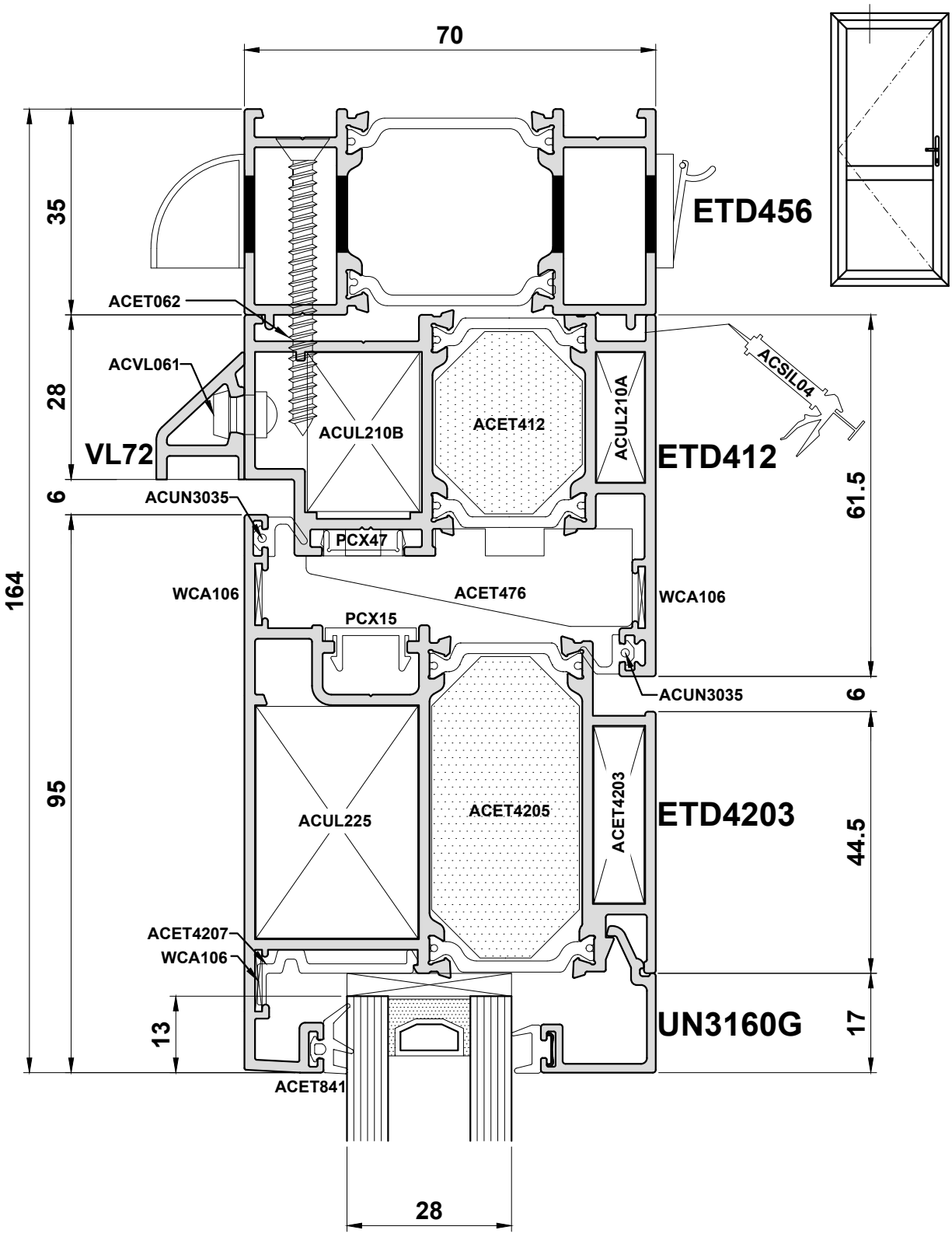

Do Not Scale From This Drawing

Open Out - Detail 15

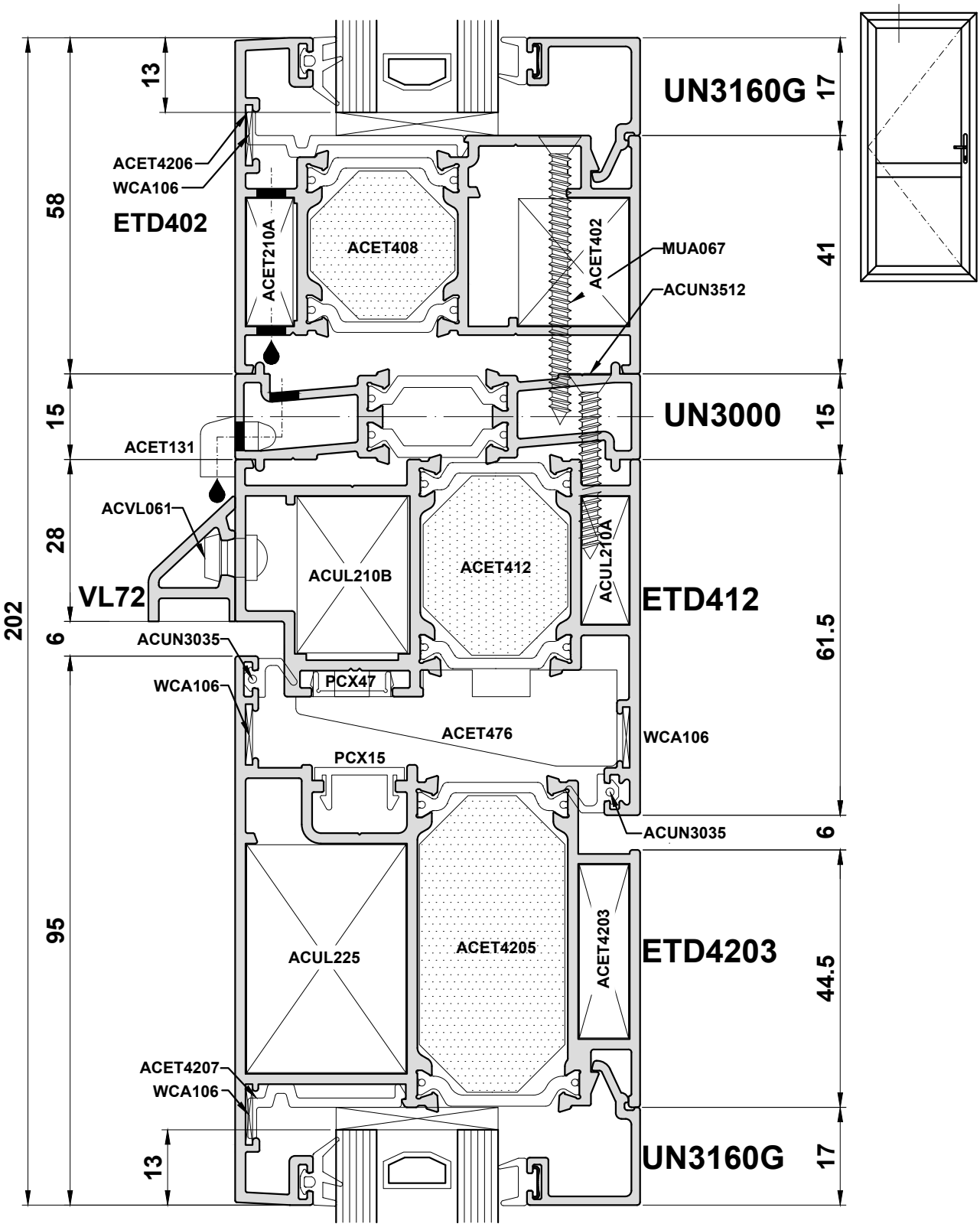

Do Not Scale From This Drawing

Open Out - Detail 16

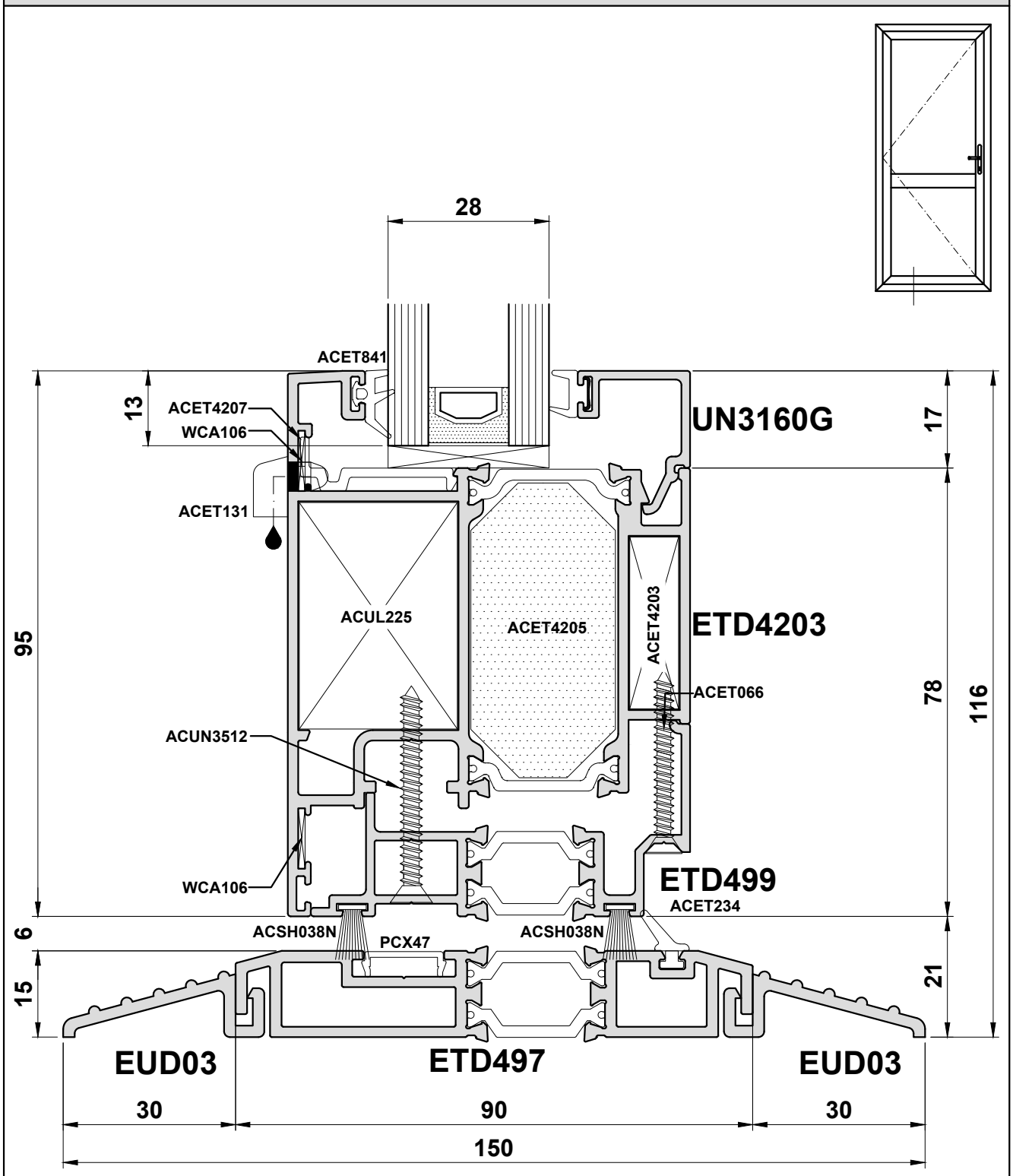

Do Not Scale From This Drawing

Open Out - Detail 16

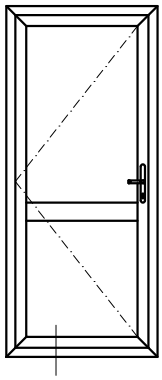

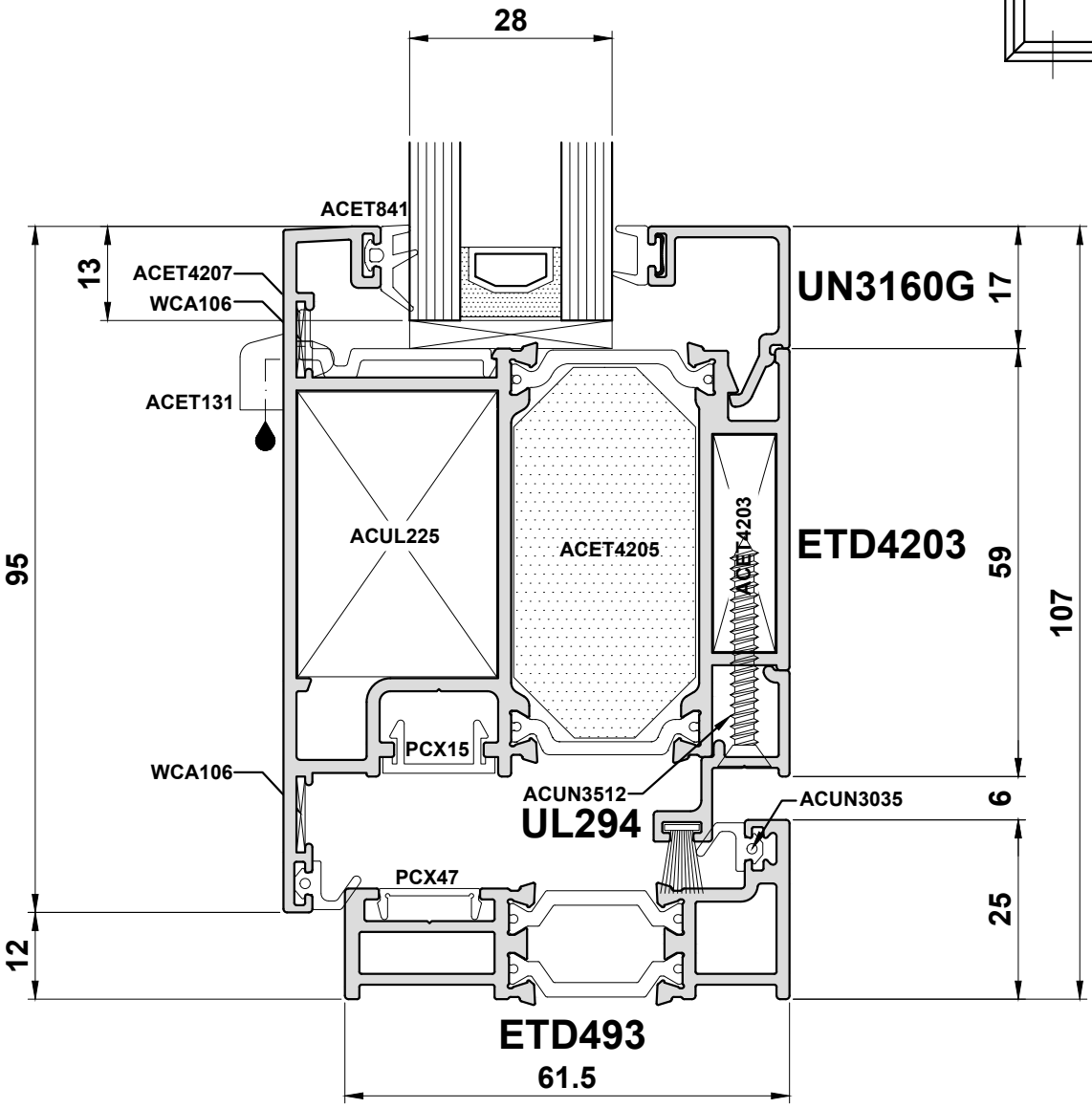

Do Not Scale From This Drawing

Open Out - Detail 16

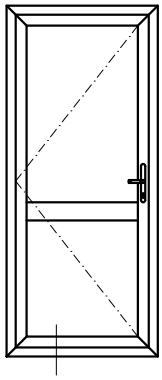

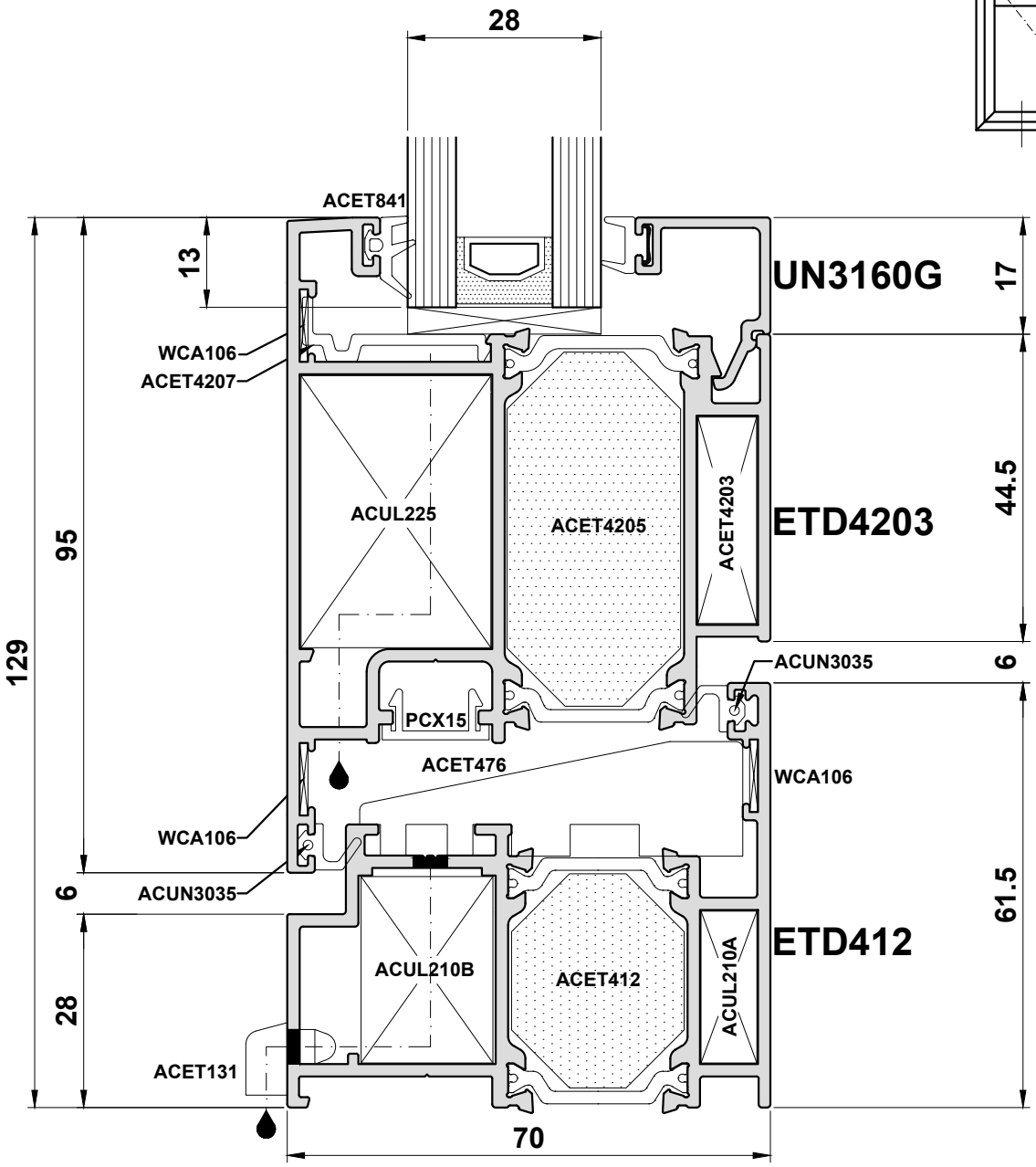

Do Not Scale From This Drawing

Section D

Statics

Open Out & In

General Size Limitations are shown on Page A02.

For Wind Loading Limitations, Please Contact
The Technical Department - T: 01934 833100

Section E

E ETD

Construction Drawings - Open In

Construction Drawings - Open Out

Corner Joint Details

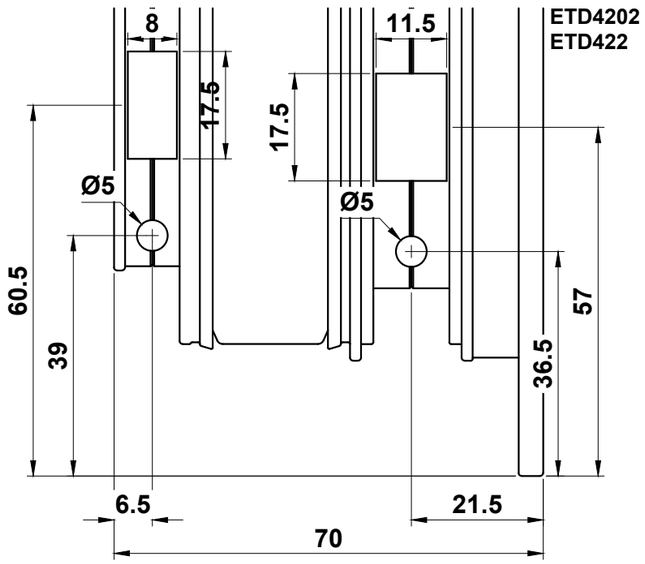

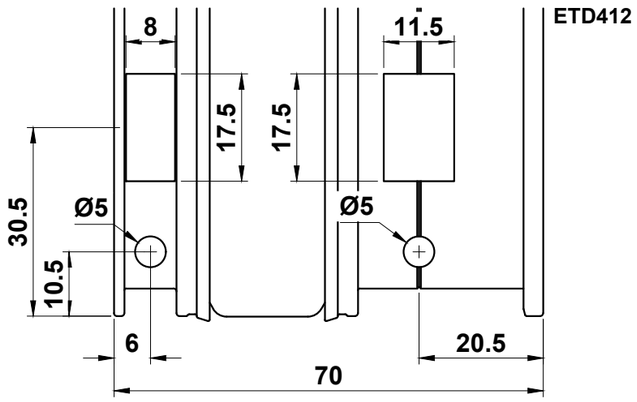

Notes

1. Degrease mitre sections
2. Cover mitred faces with ACSIL04
3. Apply ACSIL013 to cleat chambers
4. Apply ACSIL04 to any fractures formed by mechanical joint to make watertight

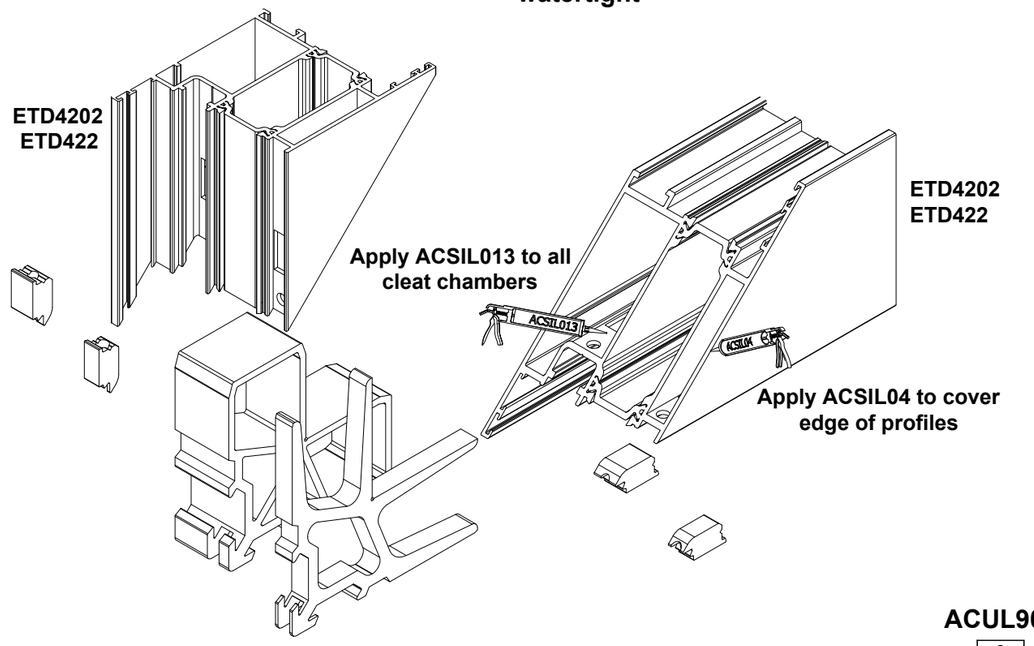

ACUL900

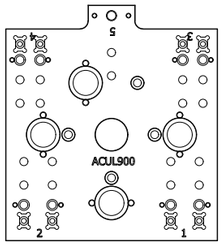

To ensure accurate corners, we recommend the use of support blocks (by others) whilst cutting.

Do Not Scale From This Drawing

ACUL900 Punch Tool

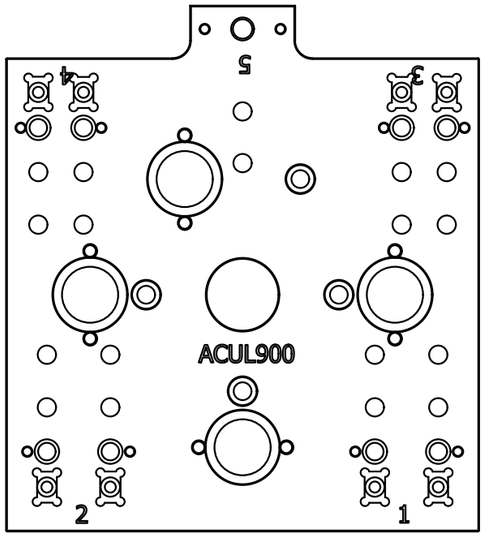

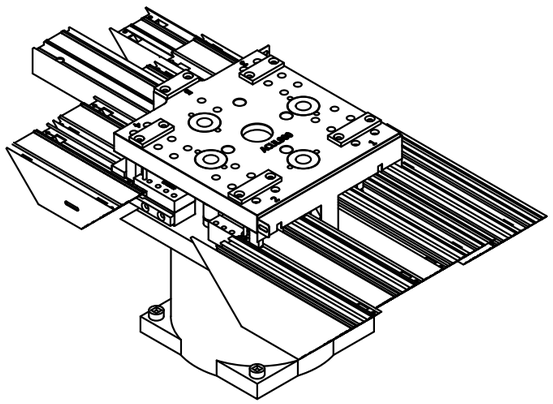

IMPORTANT NOTE:
Please do not overtighten retaining nut to punch tool base.

Use support stands for longer lengths of profiles.

Station 3 & 4

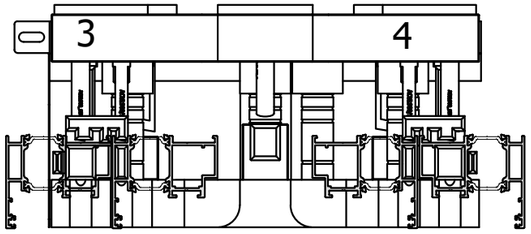

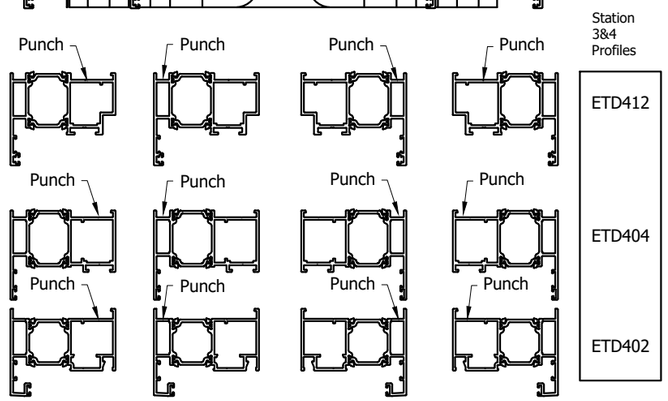

Station 1 & 2

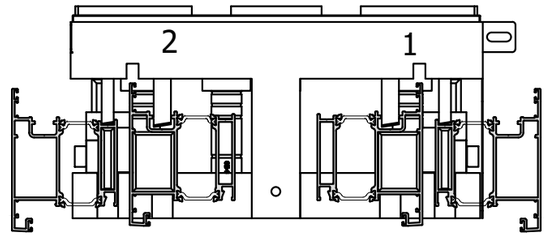

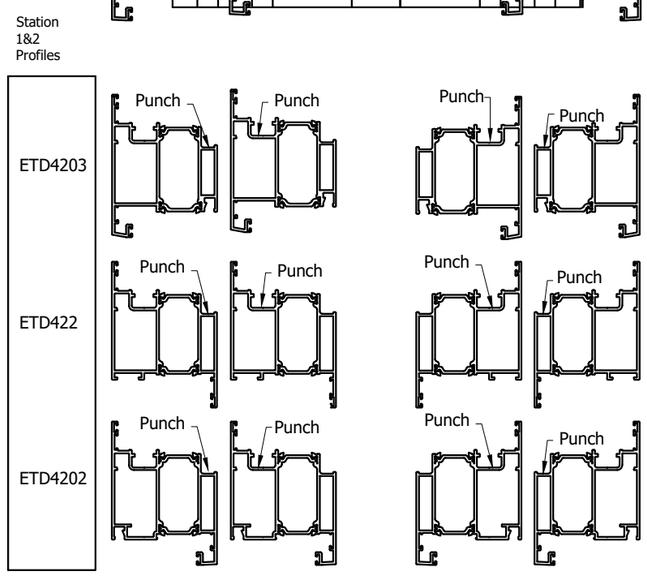

Station 5

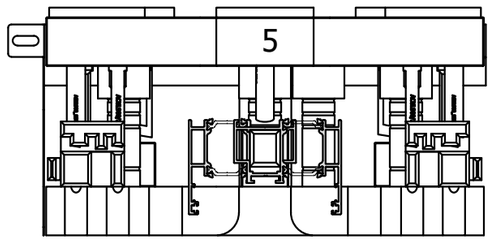

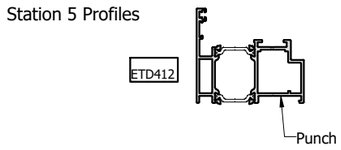

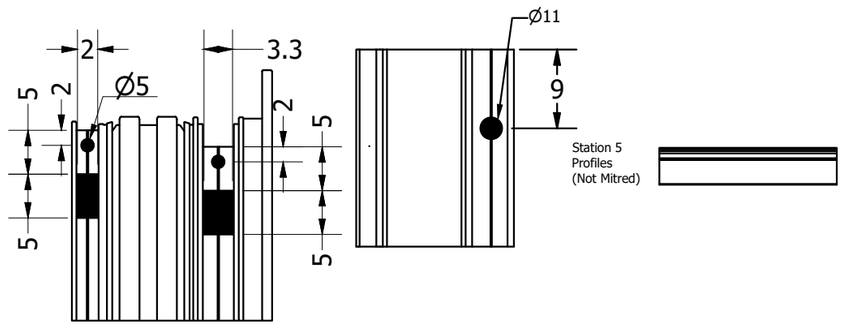

Do Not Scale From This Drawing

Flush Low Rebate Threshold Assembly

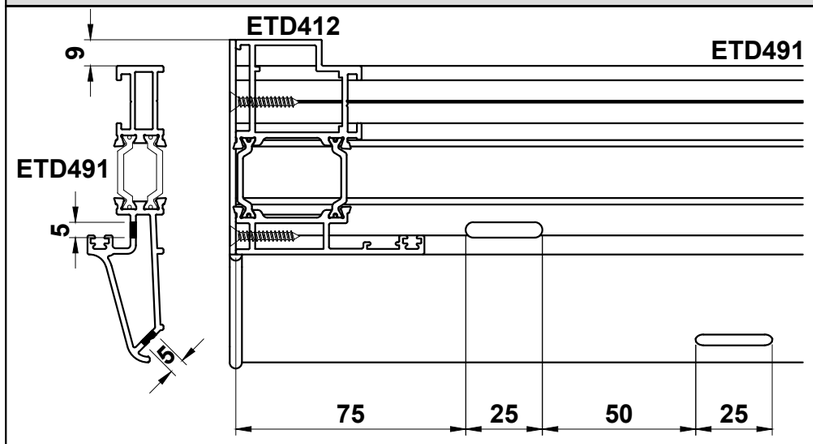

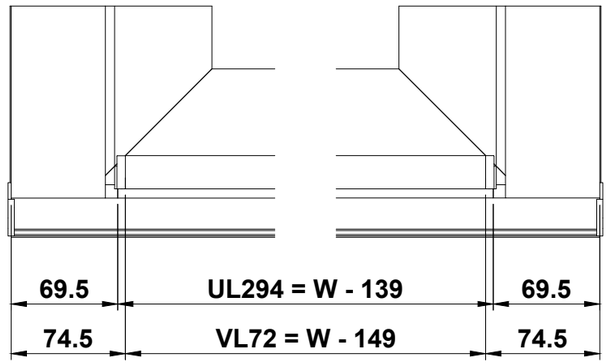

Important Note: All exposed aluminium should be coated using ACSIL014 or painted to match the frame.

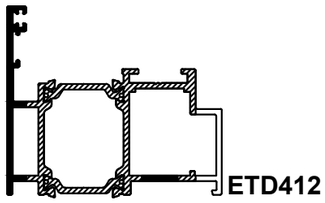

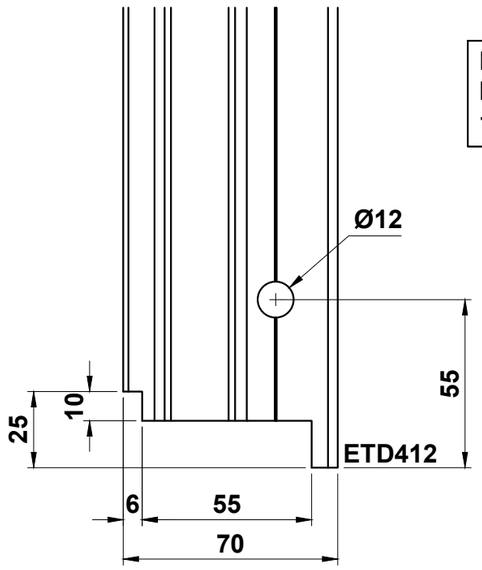

Important Note:
Ensure end cap is sealed against threshold to prevent water egress.

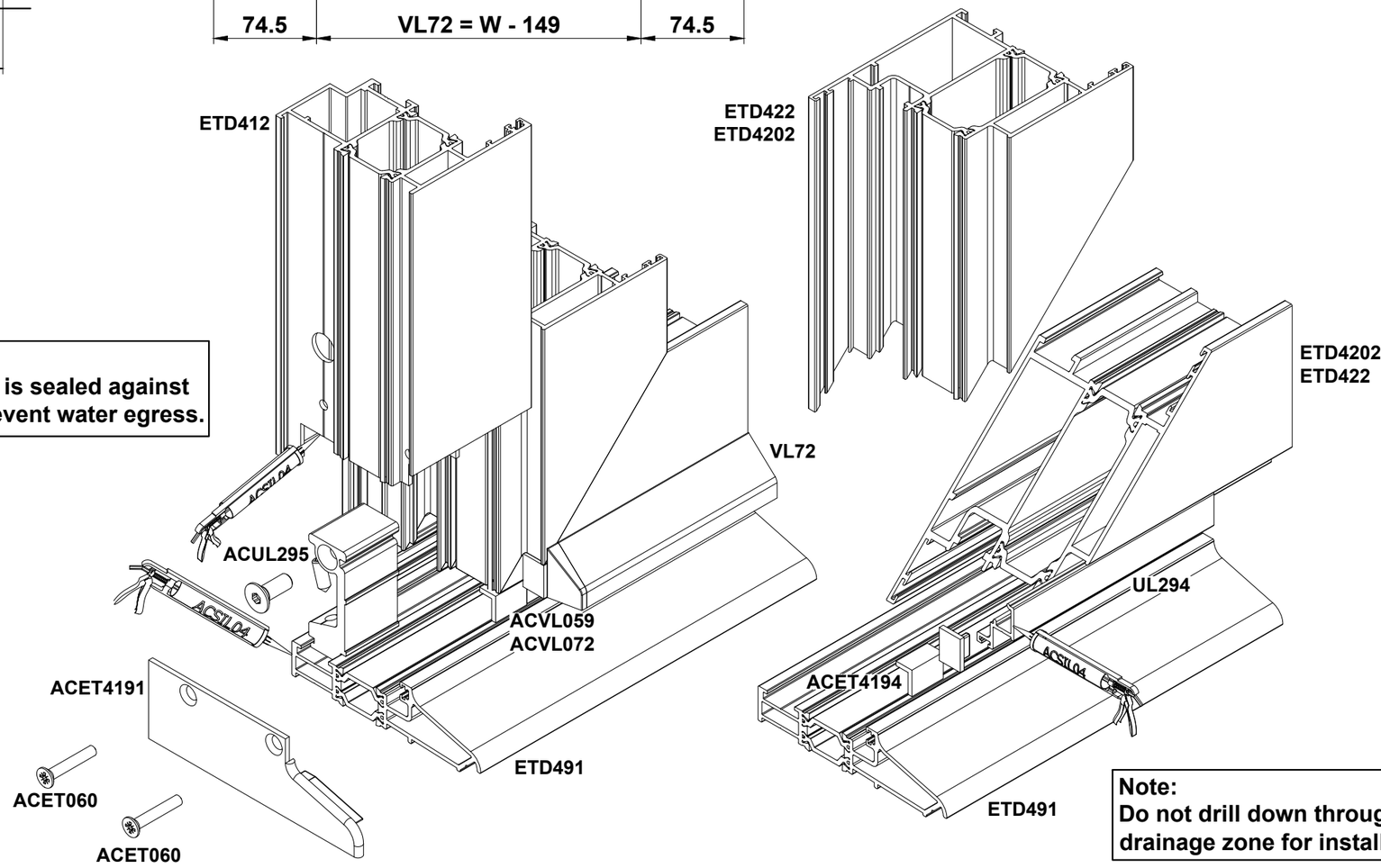

Note:
Do not drill down through drainage zone for installation.

Do Not Scale From This Drawing

Flush Low Ramp Threshold Assembly

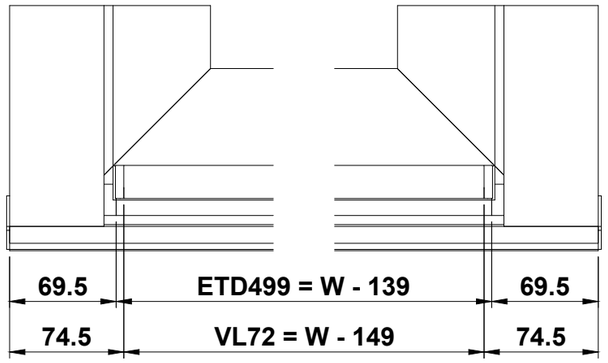

Important Note: All exposed aluminium should be coated using ACSIL014 or painted to match the frame.

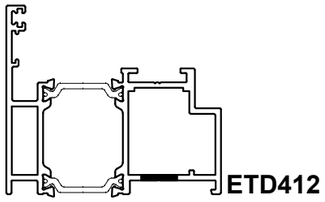

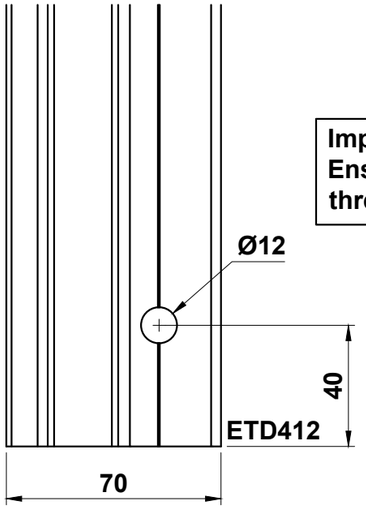

Important Note:
Ensure end cap is sealed against threshold to prevent water egress.

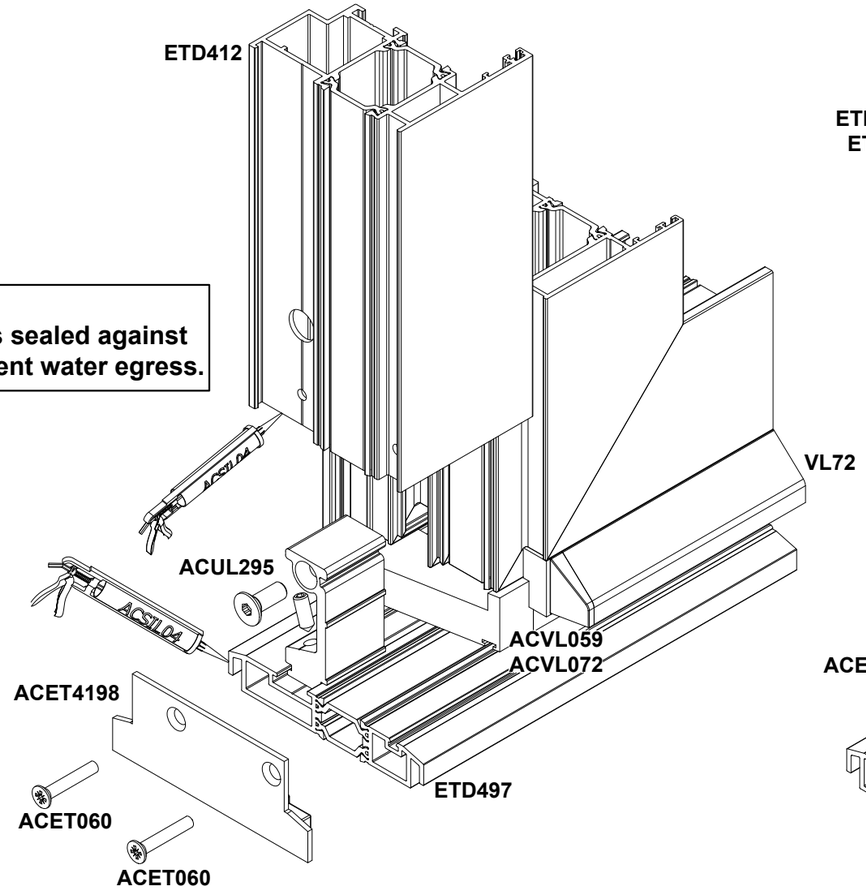

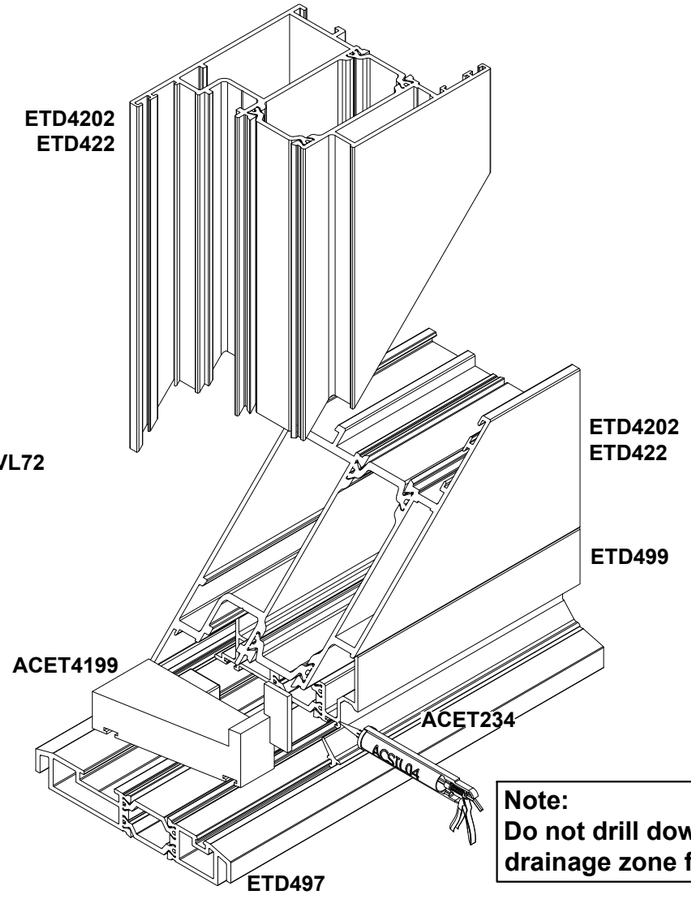

Note:
Do not drill down through drainage zone for installation.

Do Not Scale From This Drawing

Flush Drainage

Important Note: All exposed aluminium should be coated using ACSIL014 or painted to match the frame.

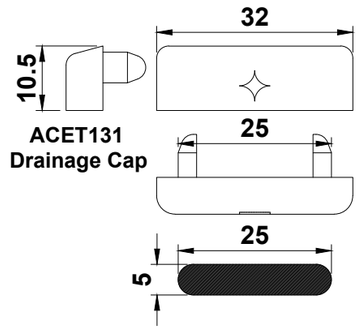

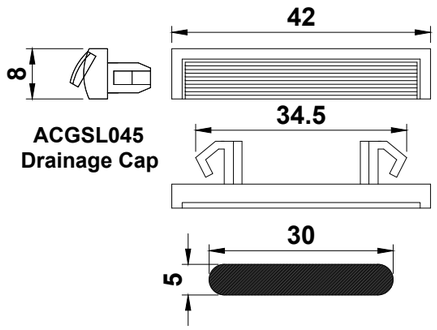

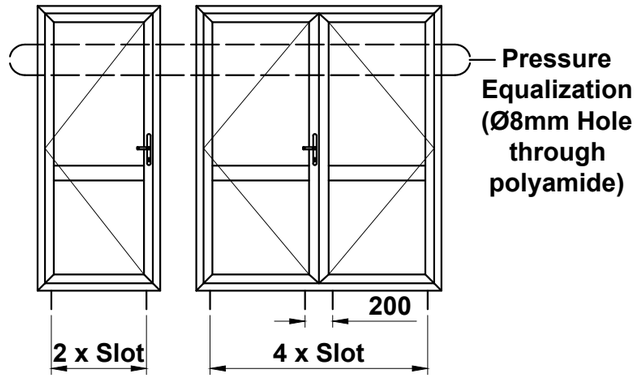

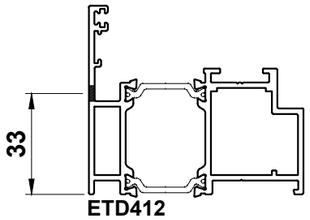

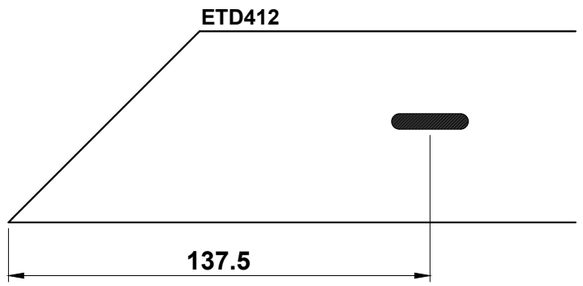

Option A

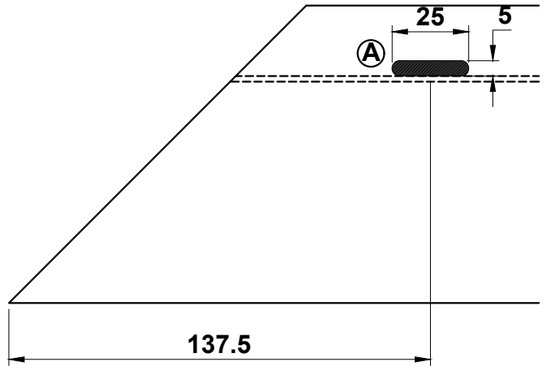

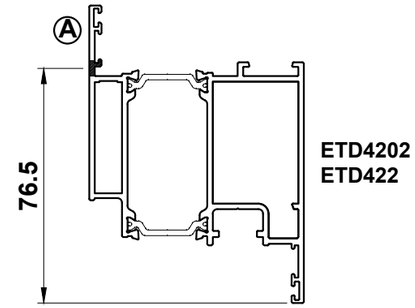

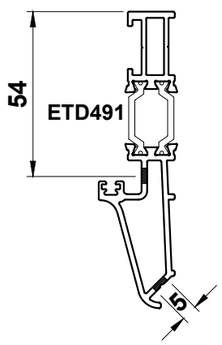

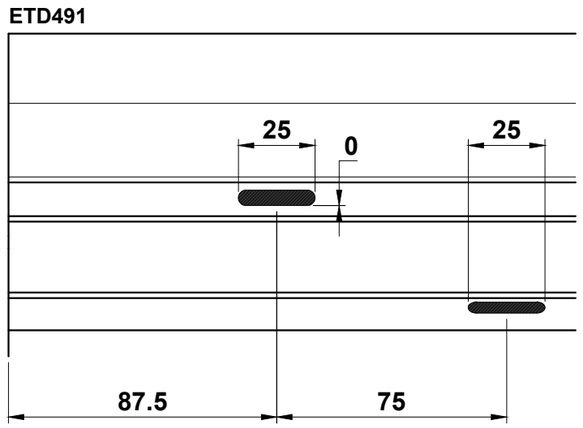

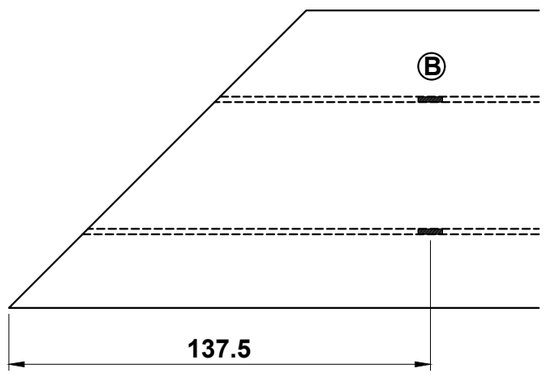

Option B

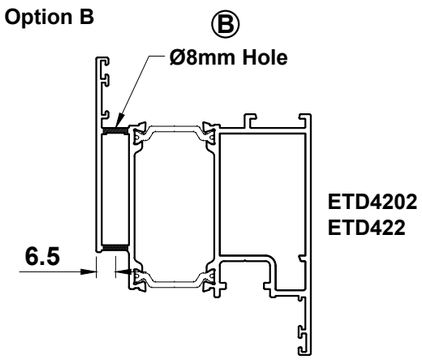

Do Not Scale From This Drawing

Sub Cill Drainage

Important Note: All exposed aluminium should be coated using ACSIL014 or painted to match the frame.

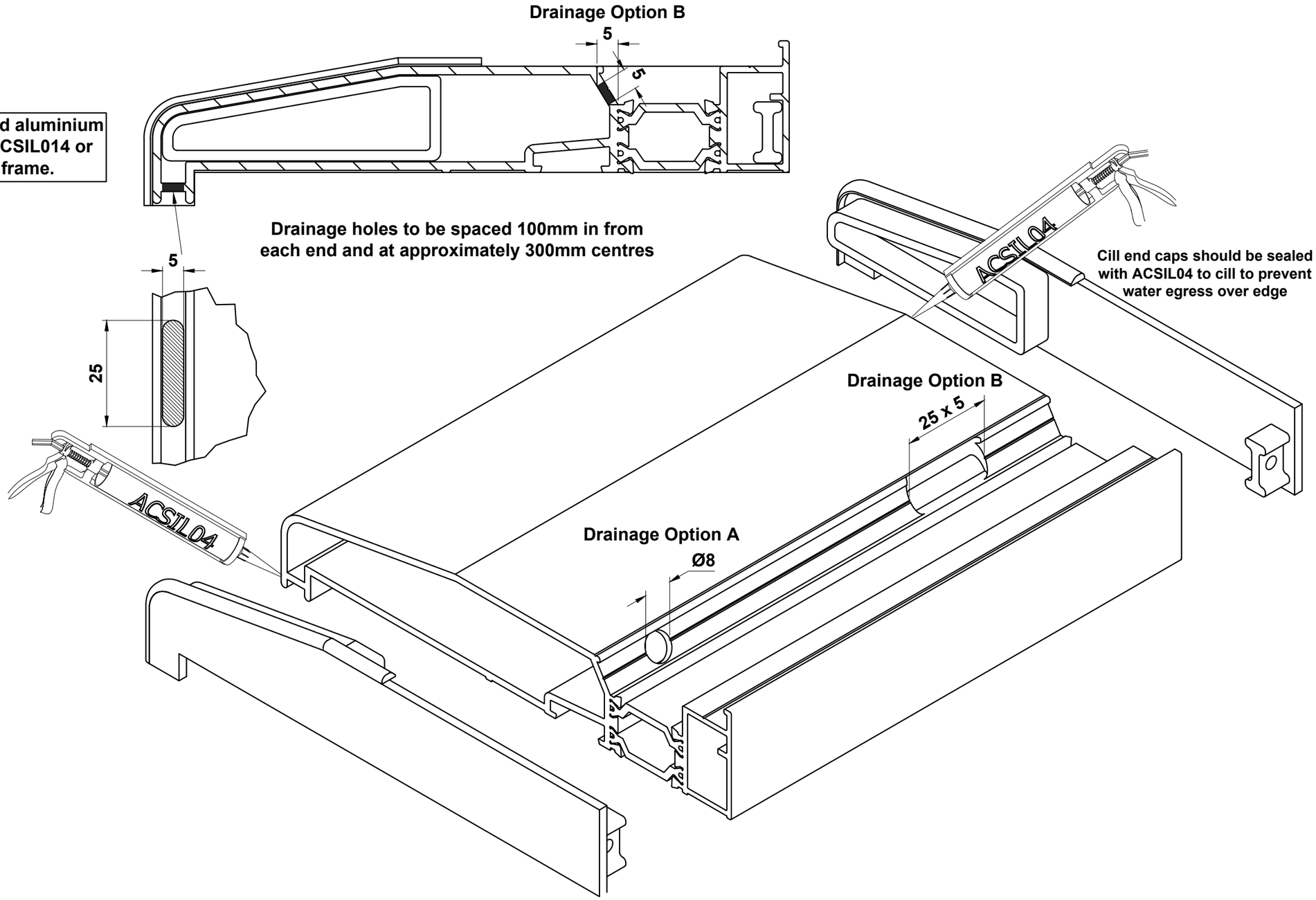

Do Not Scale From This Drawing

ETD430 & ETD422 Transom Assembly

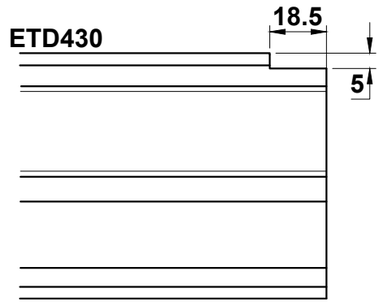

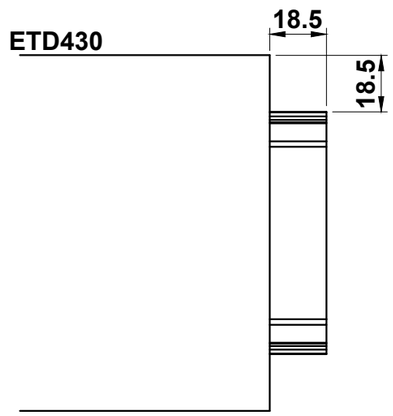

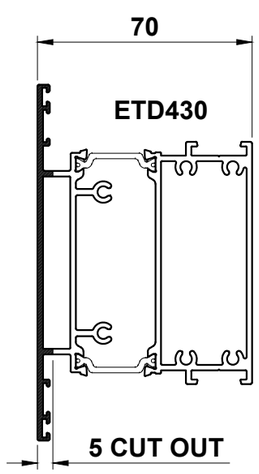

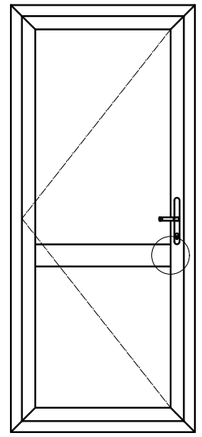

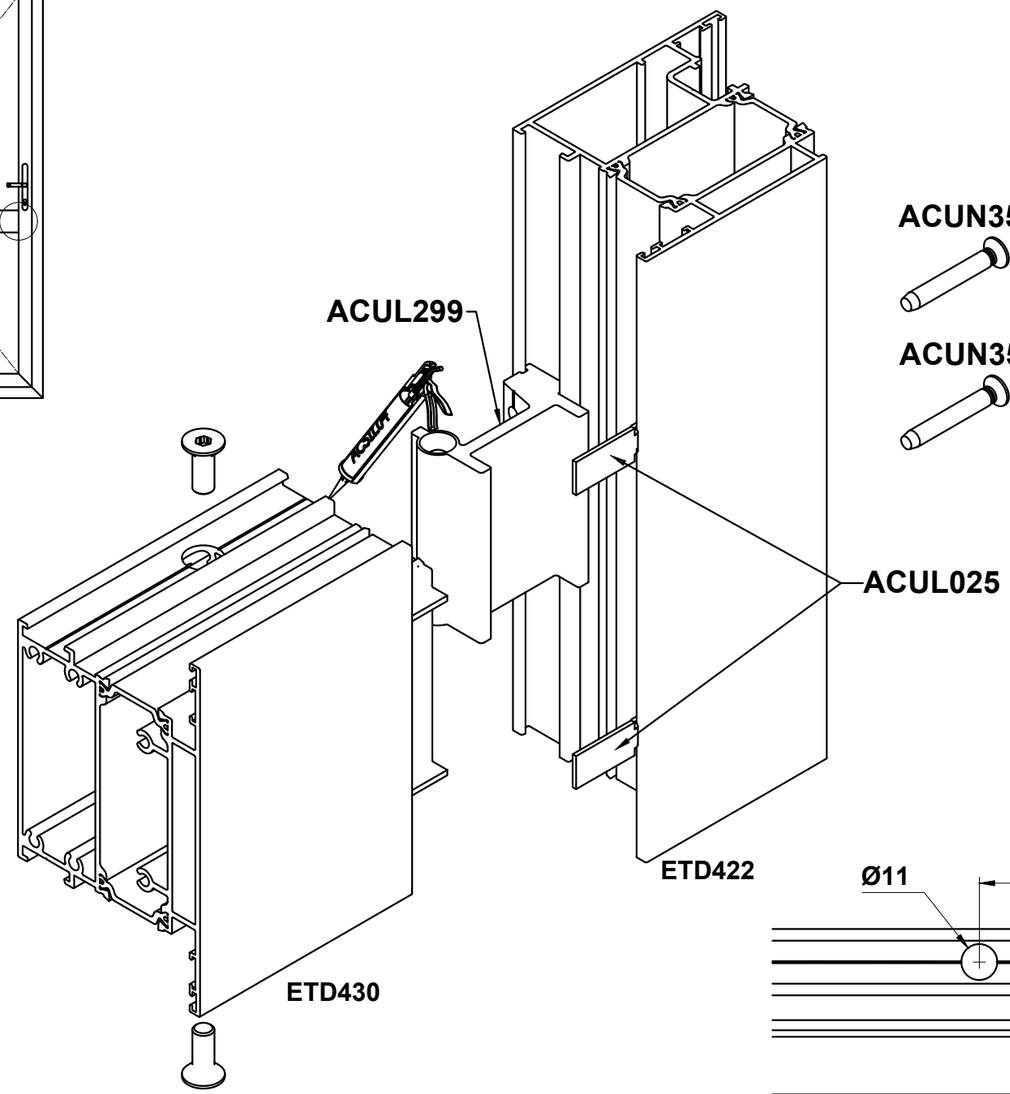

Note: 4 X ACUN3512 can be used to replace ACUL299.

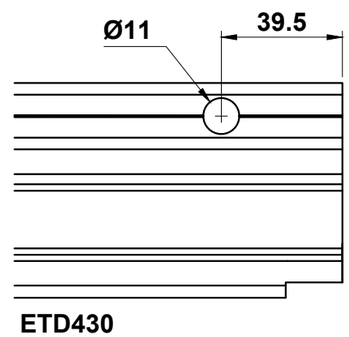

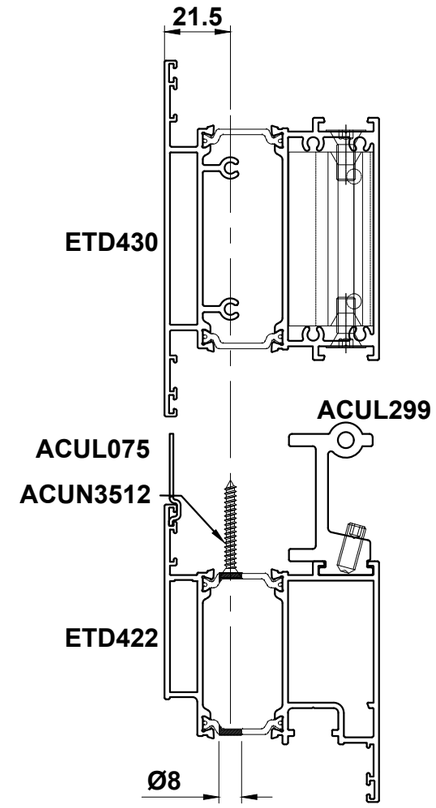

Do Not Scale From This Drawing

ETD430 & ETD404 Transom Assembly

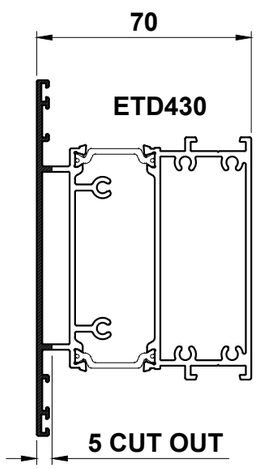

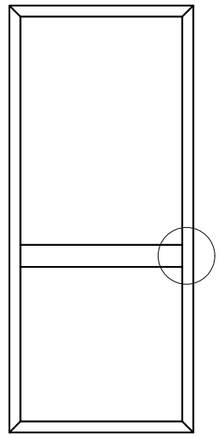

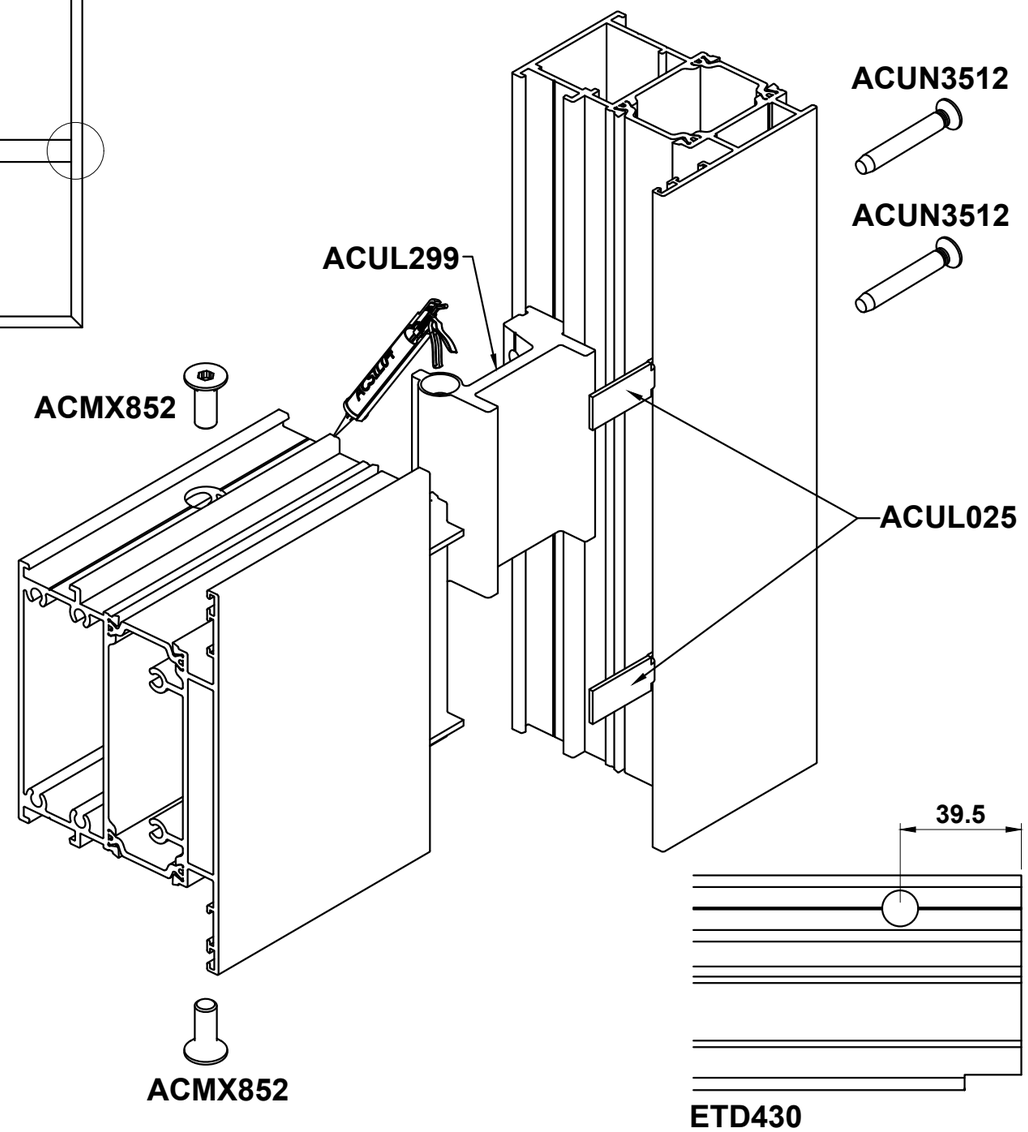

Note: 4 X ACUN3512 can be used to replace ACUL299.

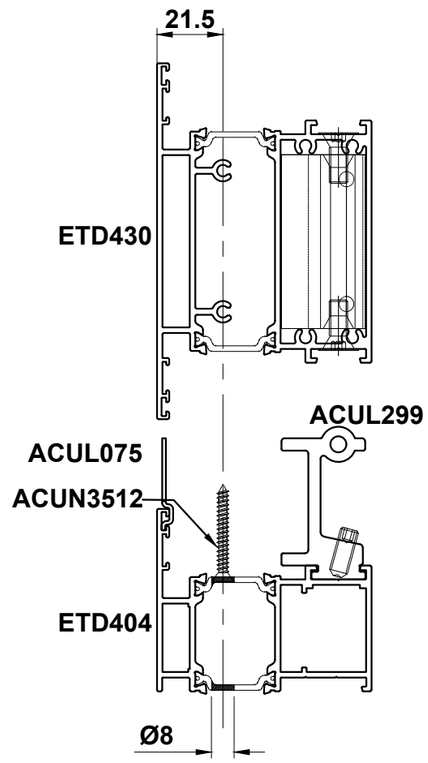

Do Not Scale From This Drawing

ETD4301 Transom Assembly

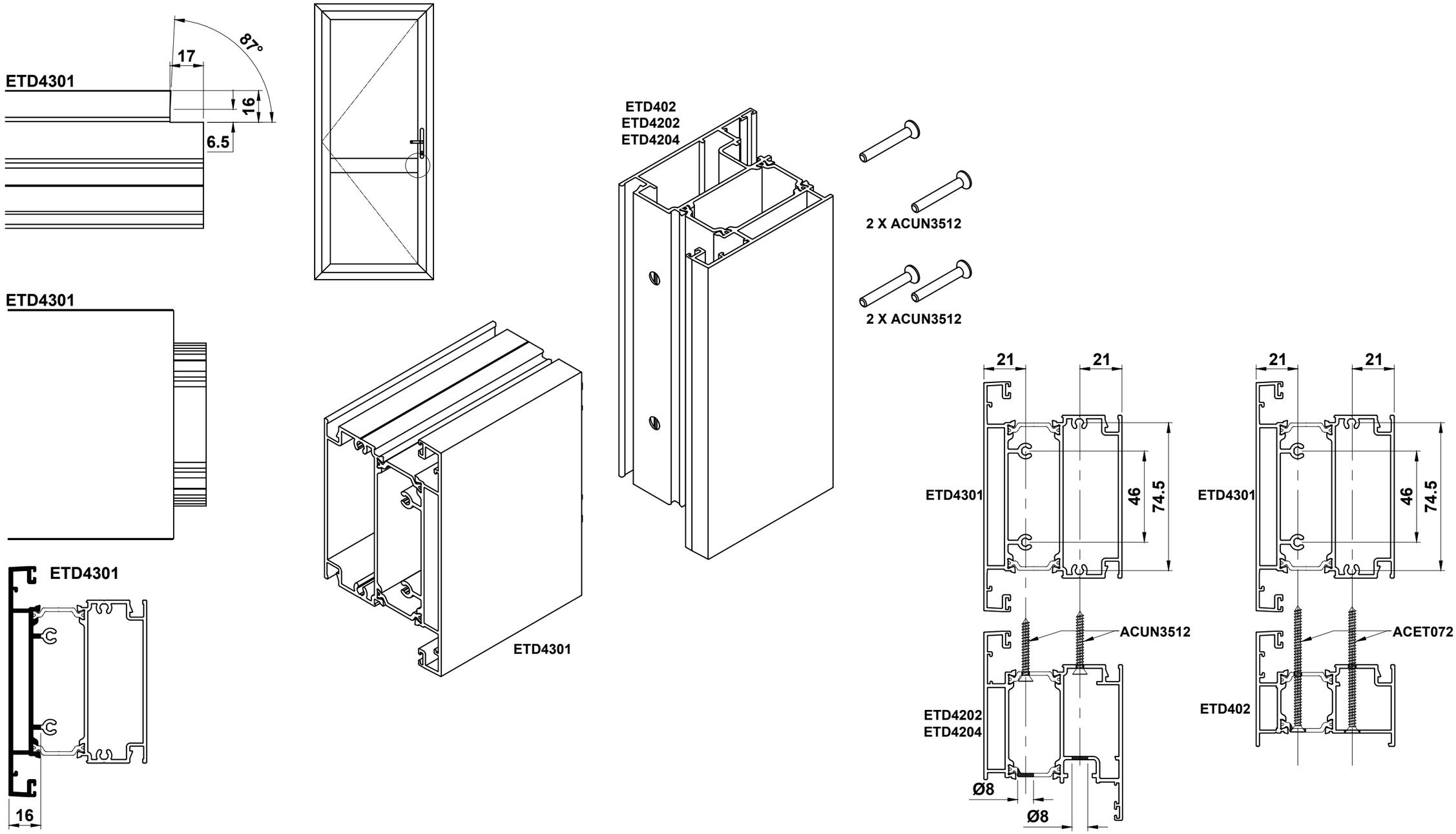

Do Not Scale From This Drawing

Stainless Steel Hardware - ACSM013, ACSM015, ACSM056 & ACSM059 Fitting Detail

Please Note:
ACSM059 is compatible with slam locks and key operated locks only.
Slam locks must not have an external lever handle.

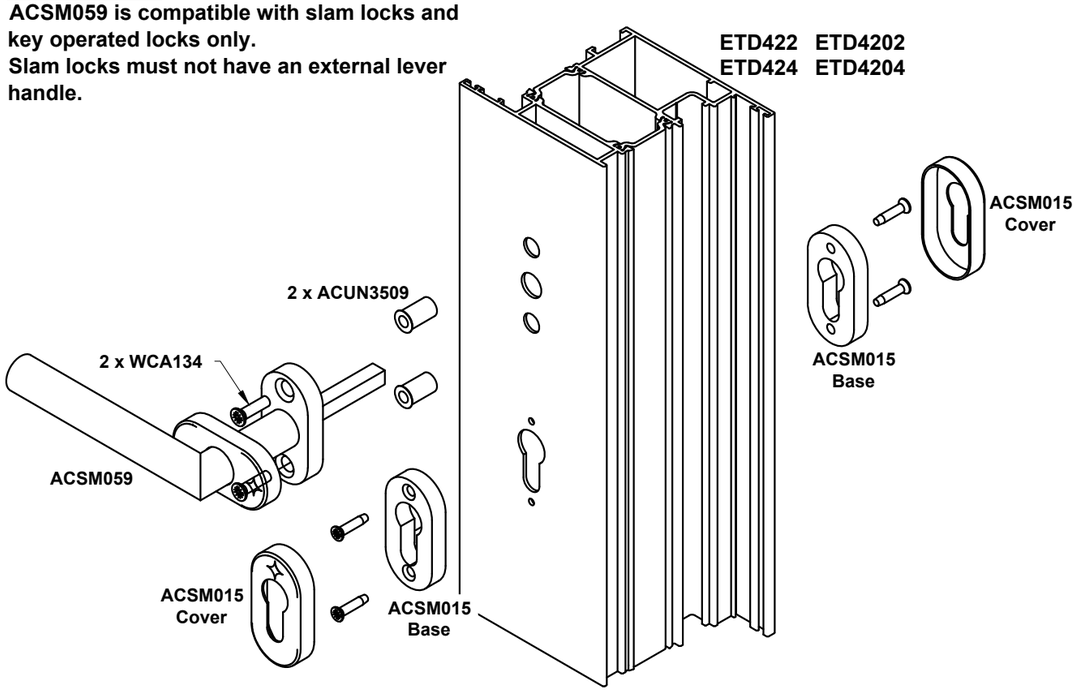

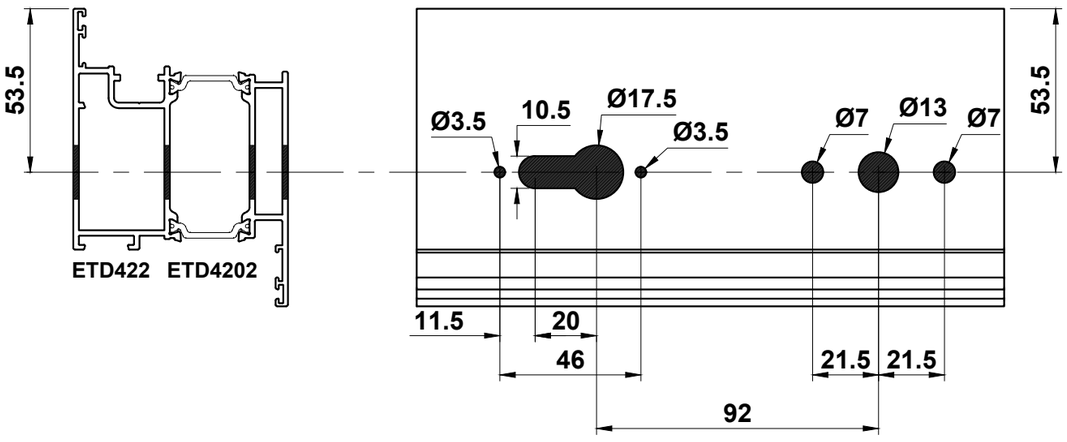

Please Note:
ACSM058 is compatible with all locks.
Slam locks must not have an external lever handle therefore require WCA134 & ACUN3509 for single side fixing and the spindle will need to be cut down.

Important Note: All exposed aluminium should be coated using ACSIL014 or painted to match the frame.

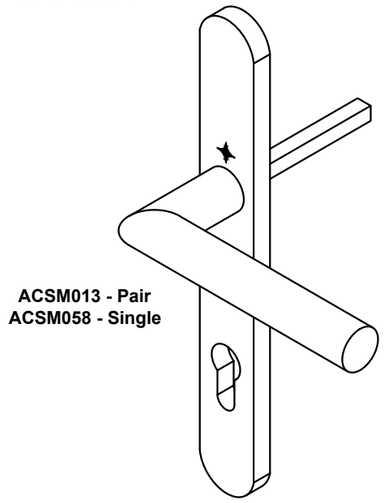

Please Note:
ACSM013SS pack contains;
2 x Universal Backplate & Lever
2 x Cover Plate
2 x Bolt Receiver Sleeve
2 x 40mm M5 Machine Screws
2 X 60mm M5 Machine Screws
1 x 3mm Allen Key
1 x 170mm Spindle

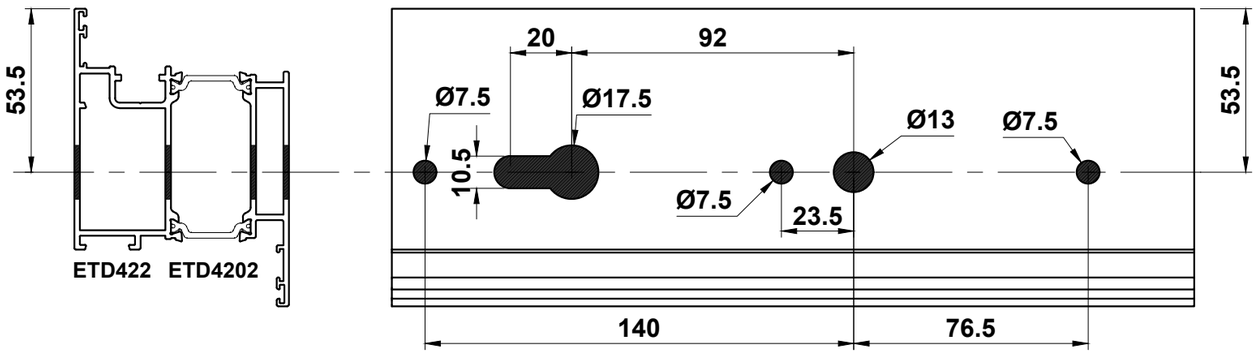

Do Not Scale From This Drawing

Panel Door Details

We offer a range of designs in panel doors from traditional Victorian, Georgian and Edwardian designs to contemporary chic. Here are just a select few we can offer:

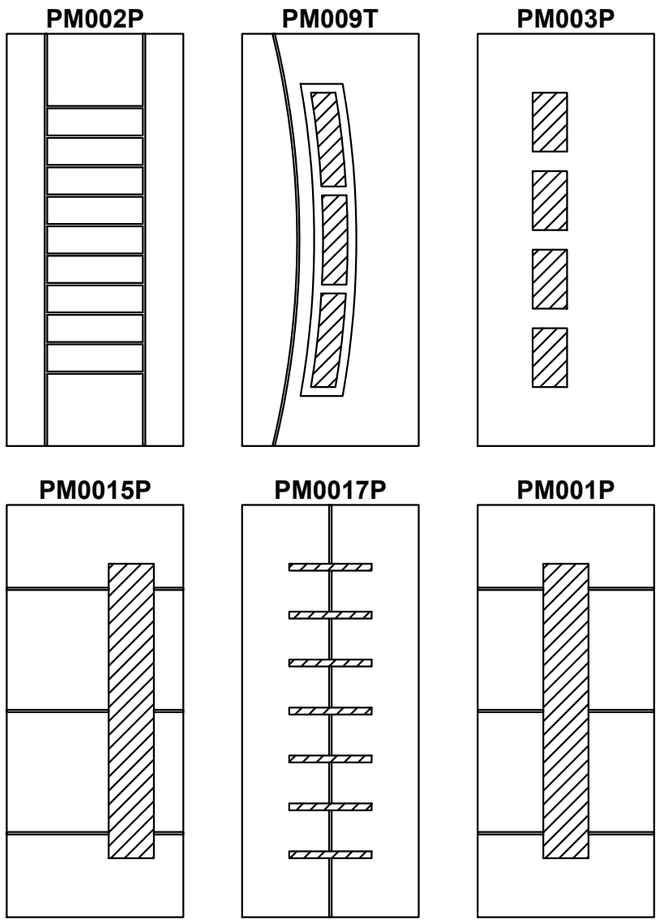

For more information and panel designs please visit our website, www.smartsystems.co.uk or call our sales team on 01934 876100.

An overall U-value of 1.2 W/m²K may be achieved by specifying glaze-in panels. Below are the centre pane U-values and overall U-values of the examples shown:

40mm Panel Thickness

Panel Number	CP U-Value (W/m2K)	Door U-Value (W/m2K)
PM002P	0.8	1.2
PM009T	0.9	1.3
PM003P	0.9	1.3
PM0015P	0.9	1.3
PM0017P	0.9	1.3
PM001P	0.9	1.3

32mm Panel Thickness

Panel Number	CP U-Value (W/m2K)	Door U-Value (W/m2K)
PM002P	1.0	1.4
PM009T	1.1	1.4
PM003P	1.1	1.4
PM0015P	1.1	1.4
PM0017P	1.1	1.4
PM001P	1.1	1.4

28mm Panel Thickness

Panel Number	CP U-Value (W/m2K)	Door U-Value (W/m2K)
PM002P	1.1	1.4
PM009T	1.2	1.5
PM003P	1.2	1.5
PM0015P	1.2	1.5
PM0017P	1.2	1.5
PM001P	1.2	1.5

Do Not Scale From This Drawing

ACSM020 & ACSM021 Fitting Detail

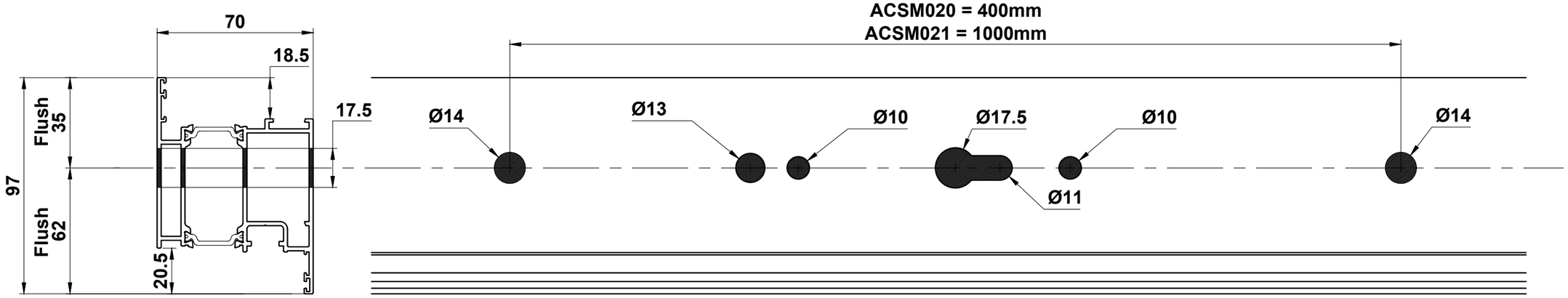

Important Note: All exposed aluminium should be coated using ACSIL014 or painted to match the frame.

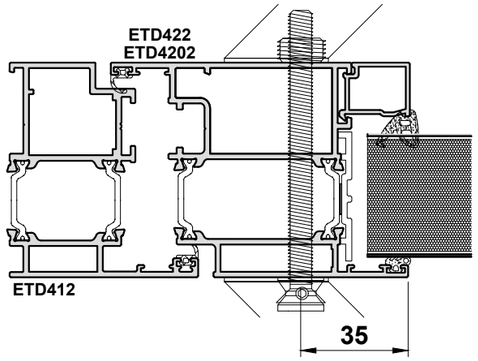

ACSM031 fixing kit is to be used when fixing two back to back handles. Screw will need to be cut down to size.

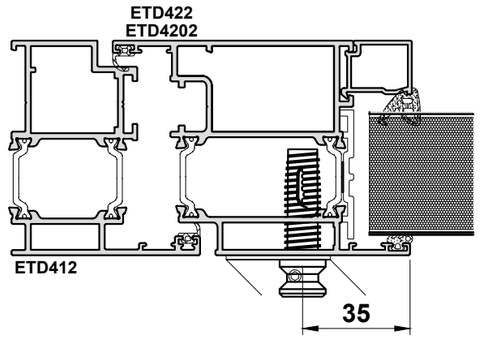

If a single handle is required, please use ACSM037 or ACSM038 single handle with ACSM030 Secret fixing.

We recommend to use ACSM015 escutcheon and position in-line with the handle fixings as shown in the above prep.

ACSM015

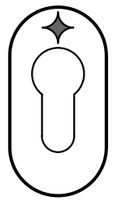

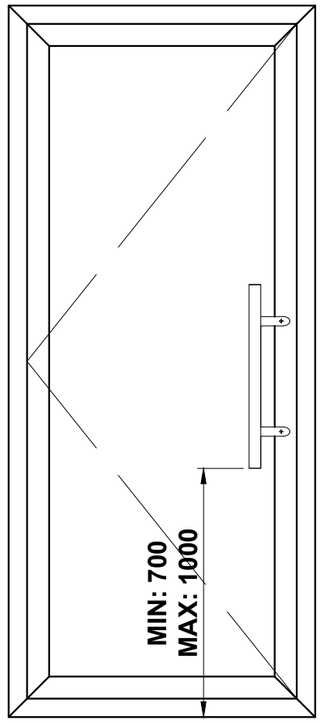

	Length (mm)	Single Handles	Fixing Kits
	600	ACSM037SS	ACSM030
	1200	ACSM038SS	
		Pair Handles	
	600	ACSM020SS	ACSM031
	1200	ACSM021SS	

Do Not Scale From This Drawing

Door Locking & SZ Hardware Options

Slam Lock Guide (Internal Lever Handle Only)

Overall Sash Height	Spindle Height (X)	Kit Part Number	
		Left Hand	Right Hand
2030-2230 (Standard)	1050	ACUL280	ACUL281
1820-2029 (Short)	1050	ACUL360	ACUL361
2231-2450 (Tall)	1050	ACUL380	ACUL381

Note: Height limits apply to all threshold options.

Key Operated Lock Guide

Overall Sash Height	Spindle Height (X)	Kit Part Number	
		Left Hand	Right Hand
2030-2230 (Standard)	1050	ACUL282	ACUL283
1820-2029 (Short)	1050	ACUL362	ACUL363
2231-2450 (Tall)	1050	ACUL382	ACUL383

Handle With Large Backplate Guide

Ext. Handle	Int. Handle	Spindle	Cylinder	Screw	Screw	Rivnuts
	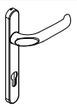	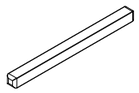	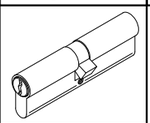	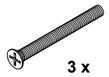 3 x	 3 x	 3 x
ACSZ800	ACSZ801 ACSZ803 ACSZ830 T	ACMX409Sq. Spindle 150mm	-- ACCY0035 Half Cylinder	ACMX861 M5 x 75mm	--	--
ACSZ802	ACSZ803 ACSZ830 T		ACCY6035S3 35/60 Cylinder		--	--
ACSZ400 + 2 x ACVS061	ACSZ803 ACSZ830 T	ACMX008 Sq. Spindle 60mm	ACCY6035S3 35/60 Cylinder	ACVS061 M5 x 40mm	--	--
--	ACSZ803 ACSZ830 T	ACMX008 Sq. Spindle 60mm	*ACCY6035S3 35/60 Cylinder	--	WCA134 M5 x 20mm	ACUN3509 M5

*Use with Ext. Ecutcheon

Keep Handing Guide

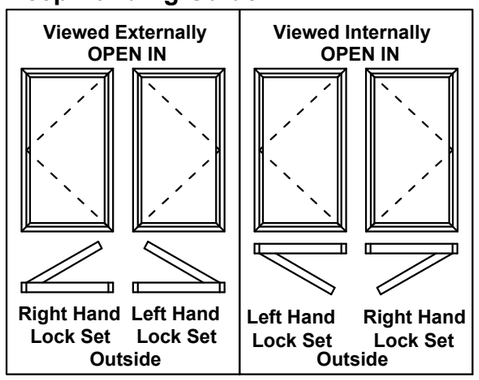

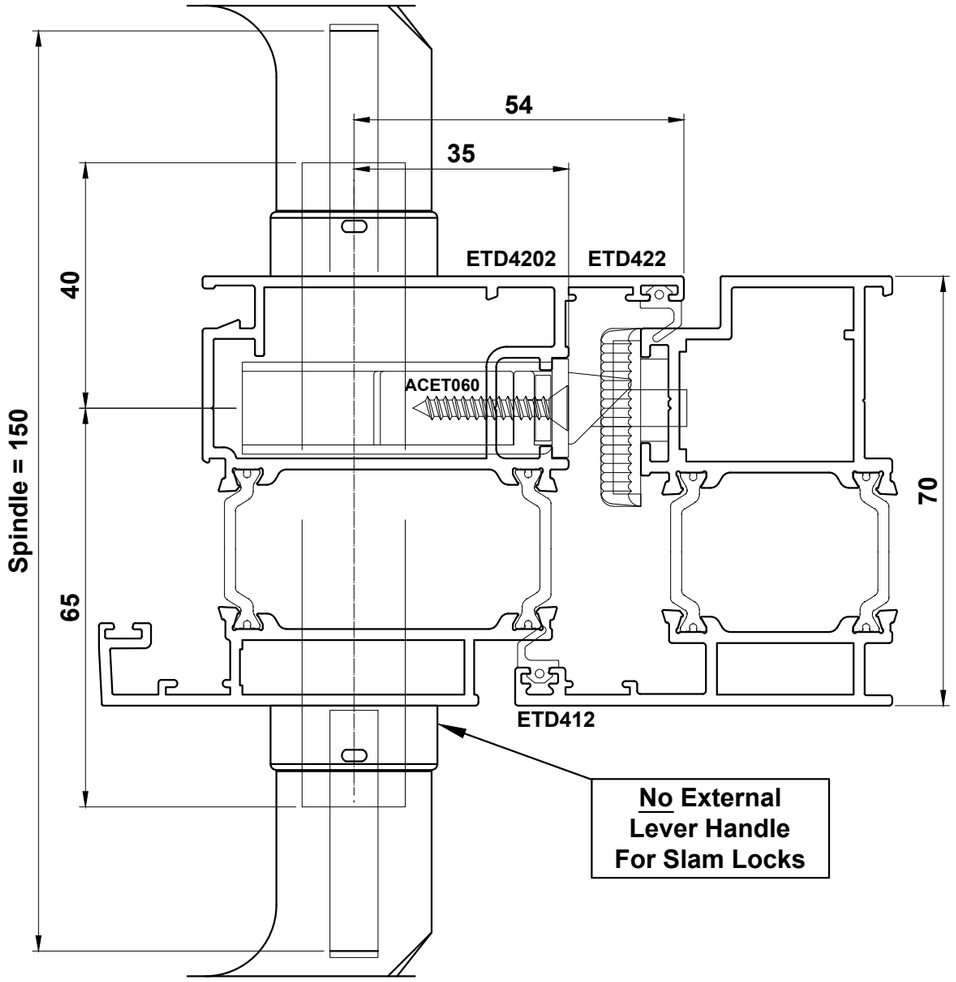

Handle with Small Backplate Guide

Ext. Handle	Ext. Escutcheon	Int. Handle	Int. Escutcheon	Spindle	Cylinder	Screw	Rivnuts
	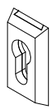		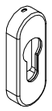	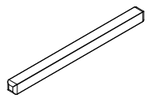	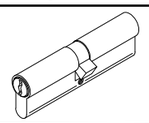		
ACSZ837	ACSZ400	ACSZ836	ACSZ839	ACMX409Sq. Spindle 150mm	ACCY6035S3 ACCY0035	WCA134 M5 x 20mm	ACUN3509 M5
	ACSZ400			ACMX008 Sq. Spindle 60mm	ACCY6035S3 ACCY0035	WCA134 M5 x 20mm	ACUN3509 M5
ACSZ837	ACSZ400	ACSZ827 T		ACMX409Sq. Spindle 150mm	ACCY6035S3 ACCY0035	WCA134 M5 x 20mm	ACUN3509 M5

- With Cylinder
- Without Cylinder
- T Handle With Cylinder
- T Handle Without Cylinder

Note:
Please check kitemark for all suitable hardware to achieve PAS24.

Do Not Scale From This Drawing

ACUL260 Hinge Preparation

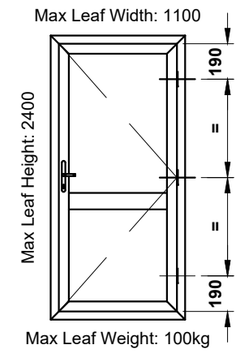

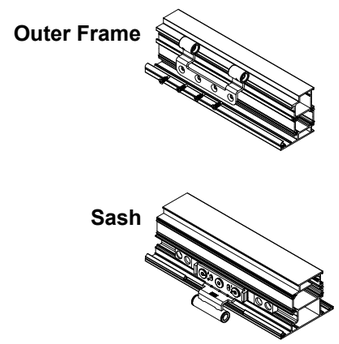

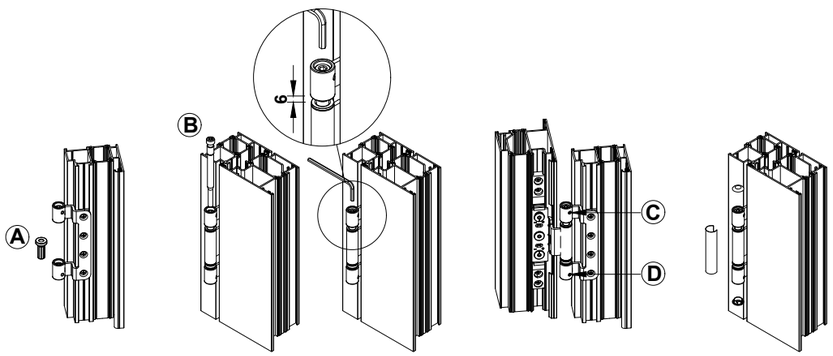

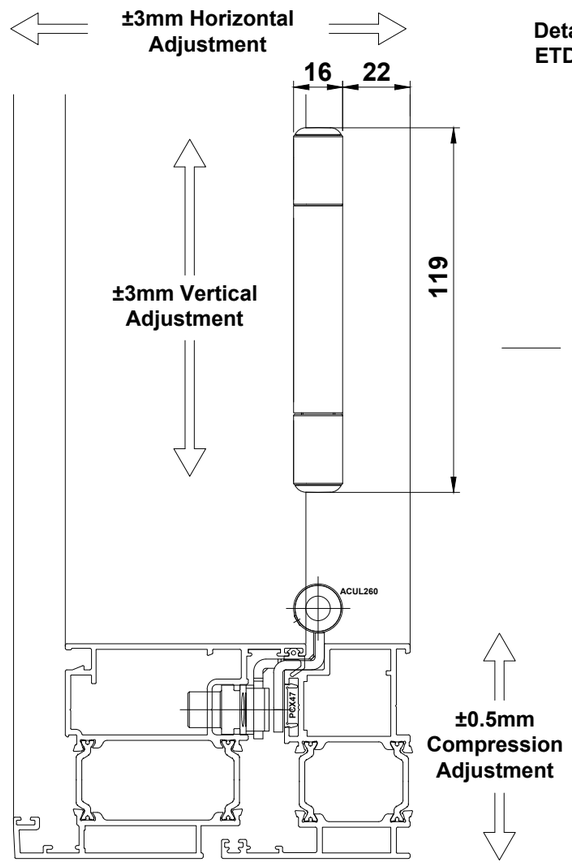

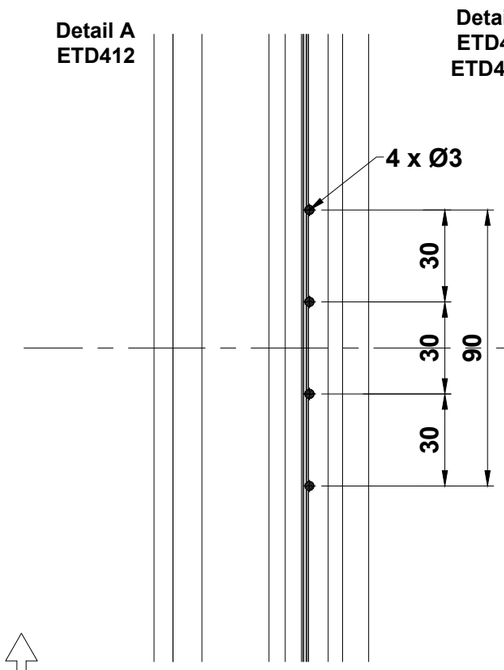

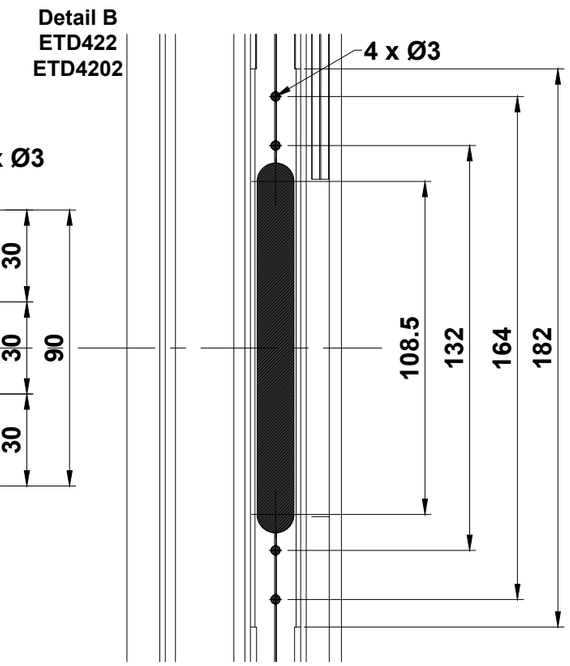

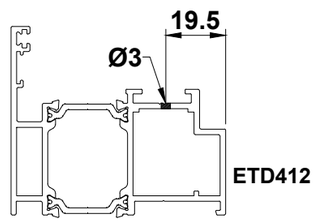

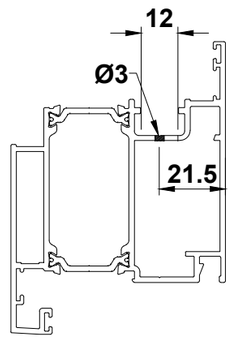

Fitting Instructions:

1. Measure and mark the hinge centrelines on the sash & outer frame
2. Mark, drill & machine to the dimensions shown in details A & B
3. Fasten the outer frame hinge part using 4 x ACUN3512 screws
4. Fasten the sash hinge part using 4 x ACUN3512 screws ensuring the grub screws are positioned towards the door sash
5. Using the outer frame hinge part as a guide, remove excess gasket from the sash
6. Insert Bush (A) into the bottom ring
7. Insert the sash into the frame and screw in the pin (B) with a 4mm Allen Key until a 6mm gap is reached
8. Open the sash and screw in the security screws (C) & (D)
9. Fit cover and insert caps

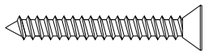

ACUN3512
No.8 x 32 CSK SS
Self Tapping Screw

Do Not Scale From This Drawing

Lock Overview of Single and Double Doors

Finger Bolt Locking Options

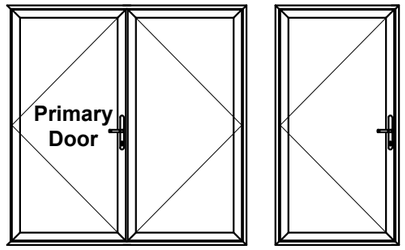

Single & Primary Door Lock Selection

Overall Sash Height	Lift Lever		Slam Lock**		Key Wind	
	Left	Right	Left	Right	Left	Right
2030-2230 (Standard)	ACUL272	ACUL273	ACUL280	ACUL281	ACUL282	ACUL283
1820-2029 (Short)	ACUL377	ACUL378	ACUL360	ACUL361	ACUL362	ACUL363
2231-2450* (Tall)	ACUL374	ACUL375	ACUL380	ACUL381	ACUL382	ACUL383

*Any doors above 2450mm are above the tested limit.
**No lever handles installed externally.

Secondary Door Accessory Selection

35mm Backset Shootbolt Adaptor	Bottom 10mm Dia Rod	Top 10mm Dia Rod		Keep	Shootbolt Guide
		Overall FRAME Size	Rod Part No.		
ACPD844 	ACPD846 (1000mm)	1820 - 1923	ACPD846 (1000mm)	ACUL390 (2 Required)	ACUL242 (2 Required)
		1923 - 2173	ACPD847 (1250mm)		
		2174 - 2423*	ACPD848 (1500mm)		
		*For doors above 2423mm, use ACPD849 (2000mm)			

Lift Lever Locking Options

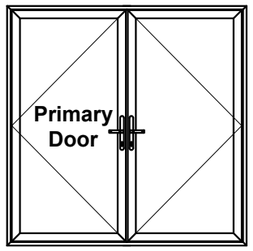

Double Handle Lift Lever Lock Option

Overall Sash Height	Primary Door Lift Lever		Secondary Door Lift Lever	Double Door Keep	Shootbolts	Shootbolt Extensions
	Left	Right				
1885-2450*	ACUL277	ACUL278	ACUL276	ACUL279	ACDV737 ACDV738	ACDV742 ACDV744

*Any doors above 2450mm are above the tested limit.
**Please see page E24 for shootbolt layout.

Keep Handing Guide

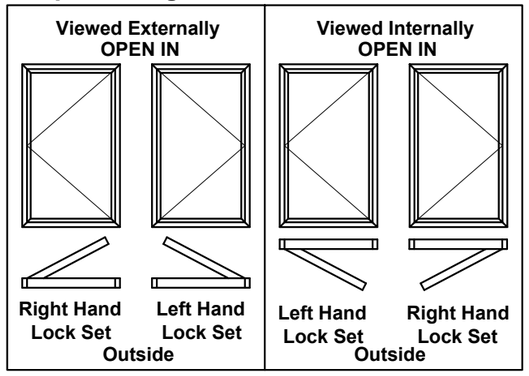

For ACUL267 & 268 Cam Lock Option Refer To Page E37

Do Not Scale From This Drawing

Single Door Lock Preparation

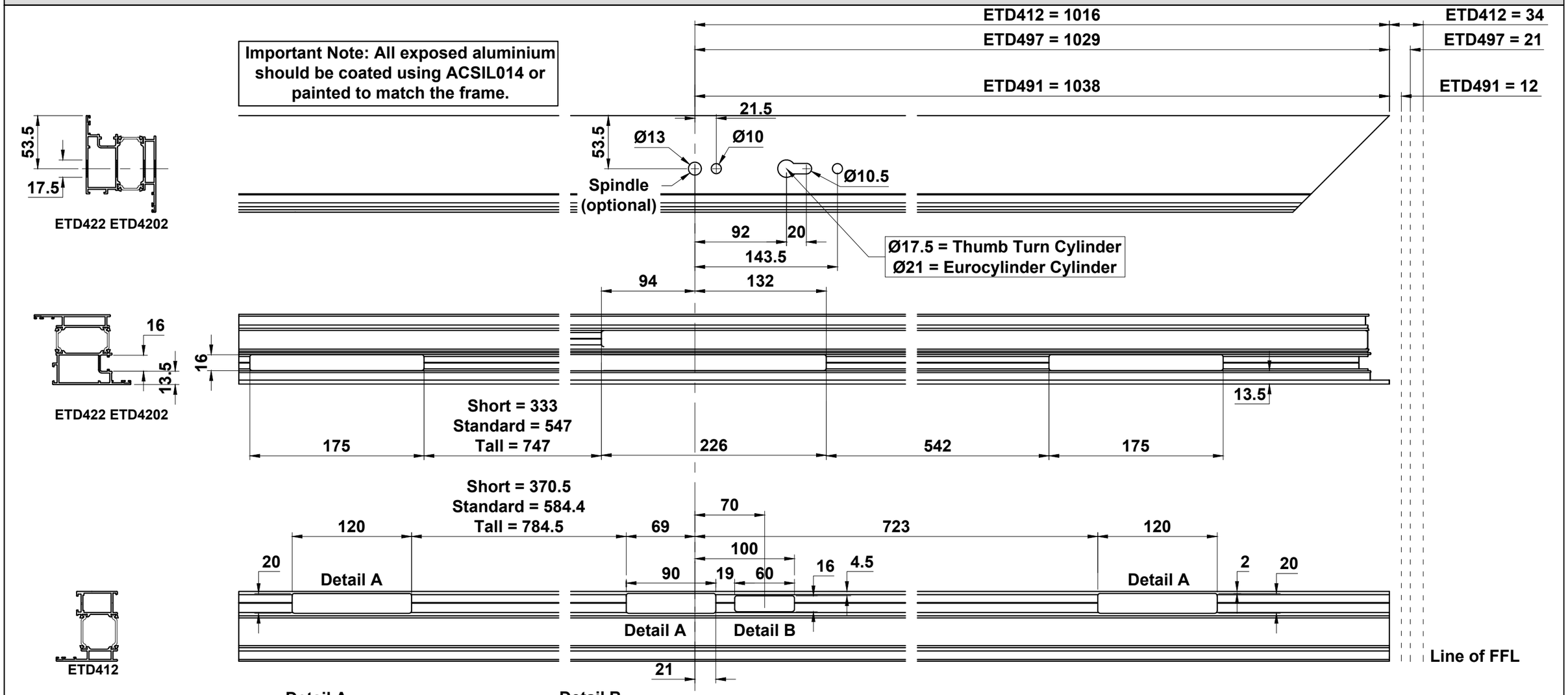

Lock Kits

	Slam Lock		Key Wind		Lift Lever	
Height	Left Hand	Right Hand	Left Hand	Right Hand	Left Hand	Right Hand
Short	ACUL360	ACUL361	ACUL362	ACUL363	ACUL377	ACUL378
Standard	ACUL280	ACUL281	ACUL282	ACUL283	ACUL272	ACUL273
Tall	ACUL380	ACUL381	ACUL382	ACUL383	ACUL374	ACUL375

Do Not Scale From This Drawing

Double Door Lift Lever Shootbolt Layout

Note: ACDV742 & ACDV744 extensions may used with all locks

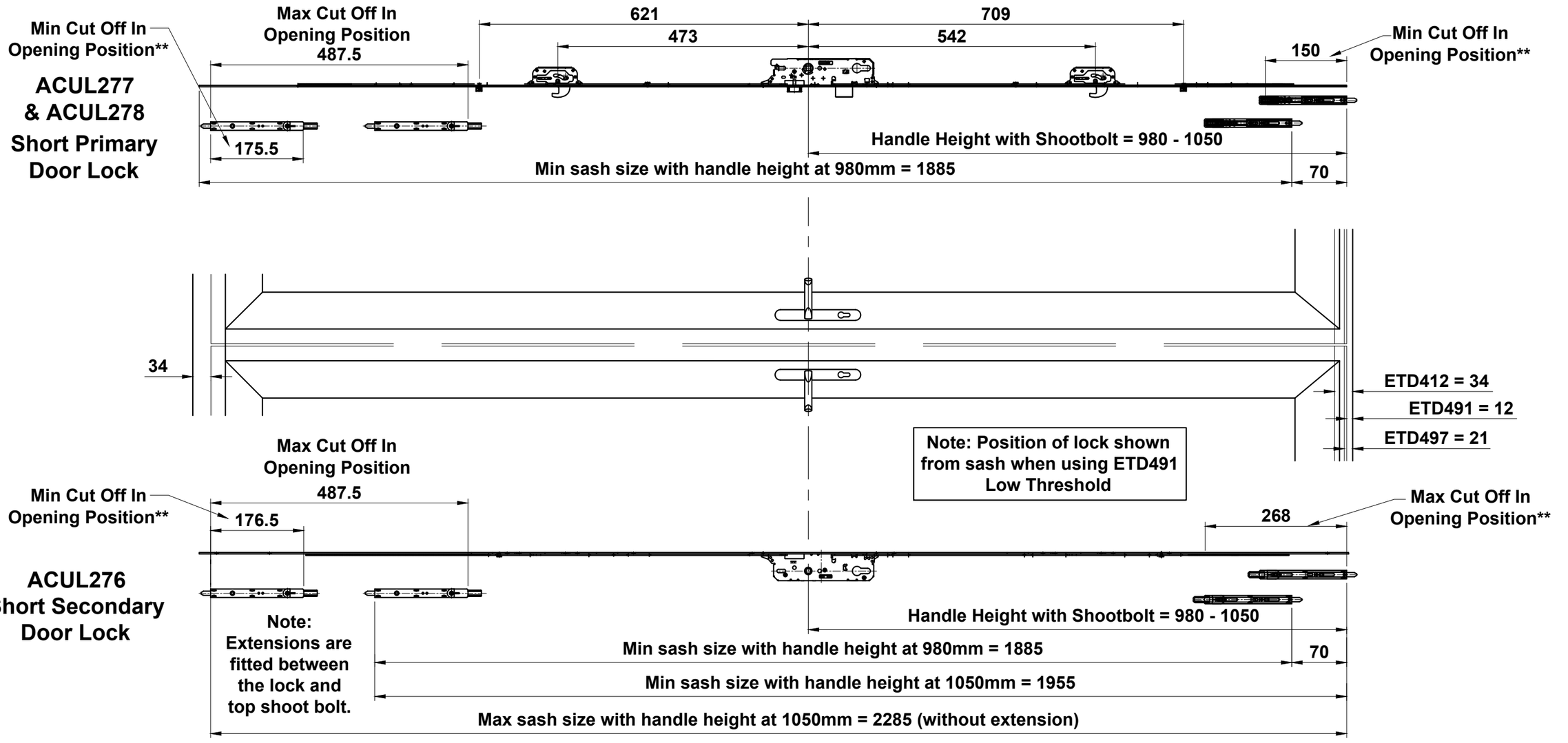

*Maximum sash height is 2500mm. Sizes shown here only indicate sizes with ACDV744.

Do Not Scale From This Drawing

Flush Double Door Lift Lever Lock Preparation for Full Frame

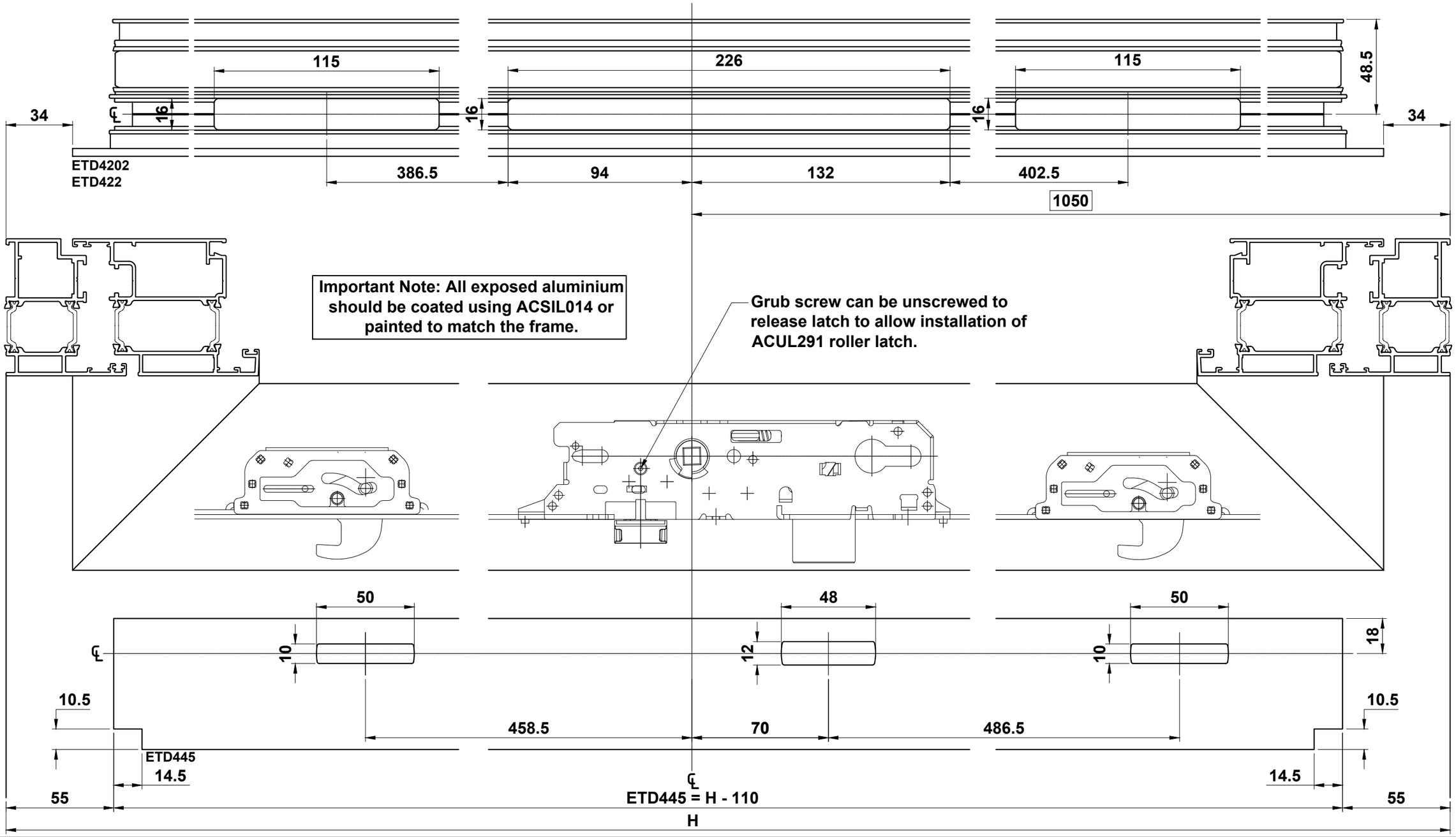

Do Not Scale From This Drawing

Flush Double Door Lift Lever Meeting Stile Assembly for Full Frame

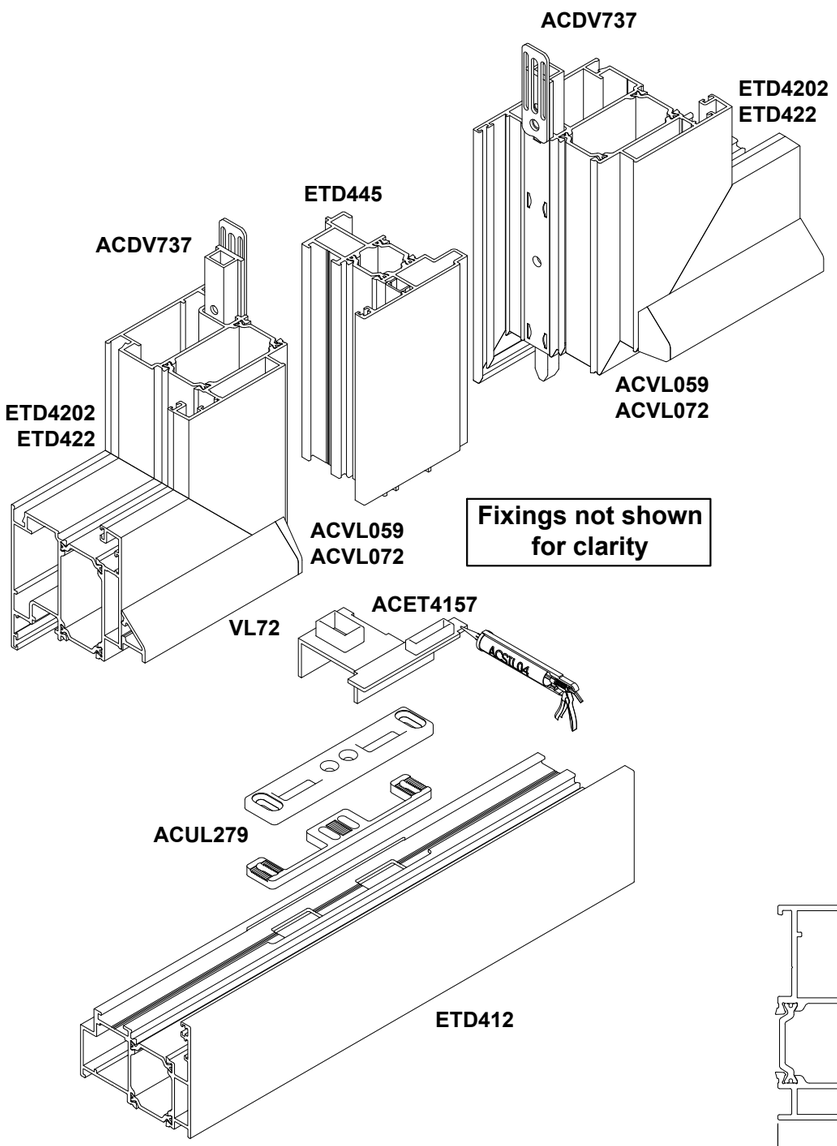

Fixings not shown for clarity

Note: All routing on outer frame require sealant to stop water leakage

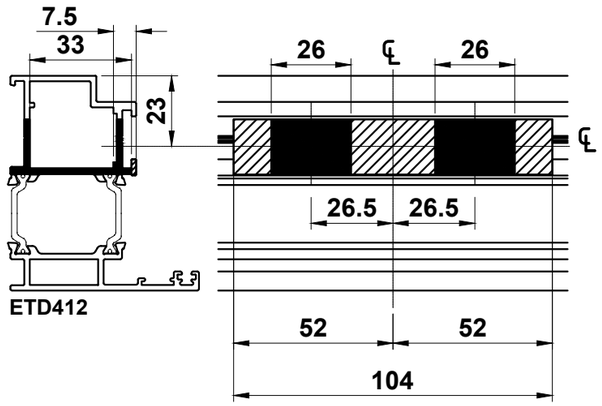

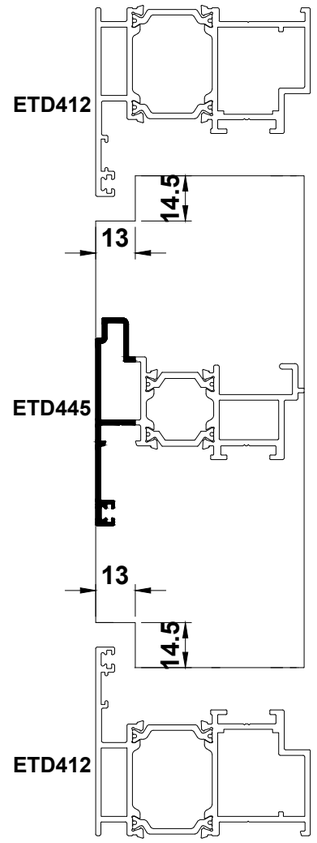

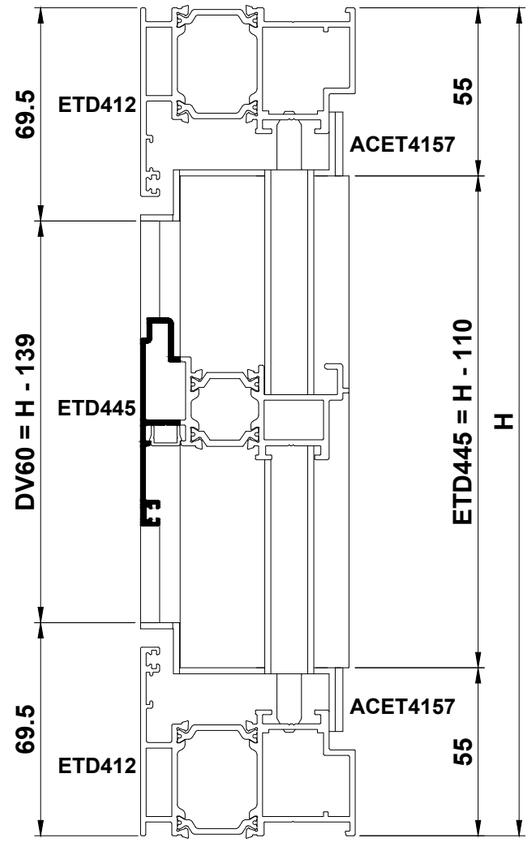

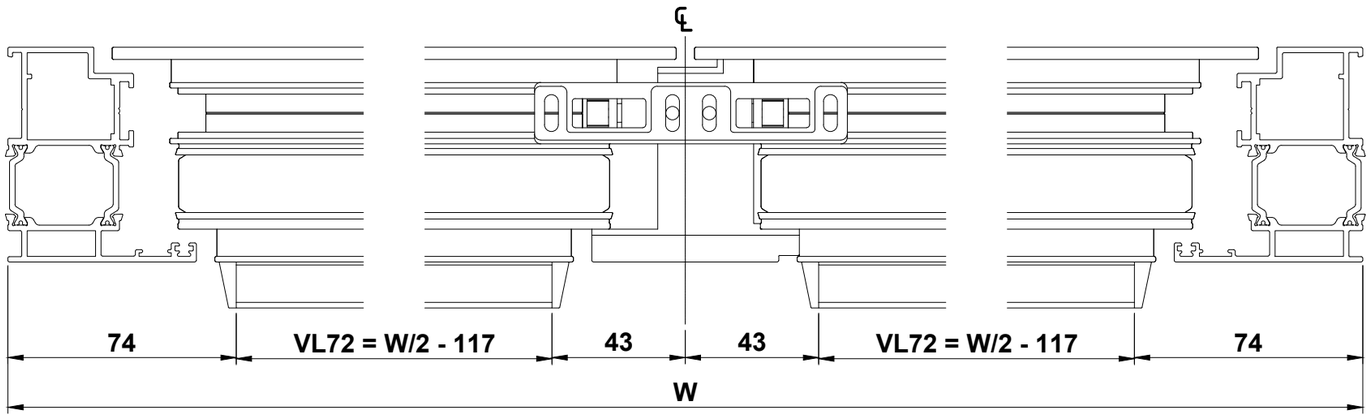

Do Not Scale From This Drawing

Double Door Lift Lever Lock Preparation for Low Rebate Threshold

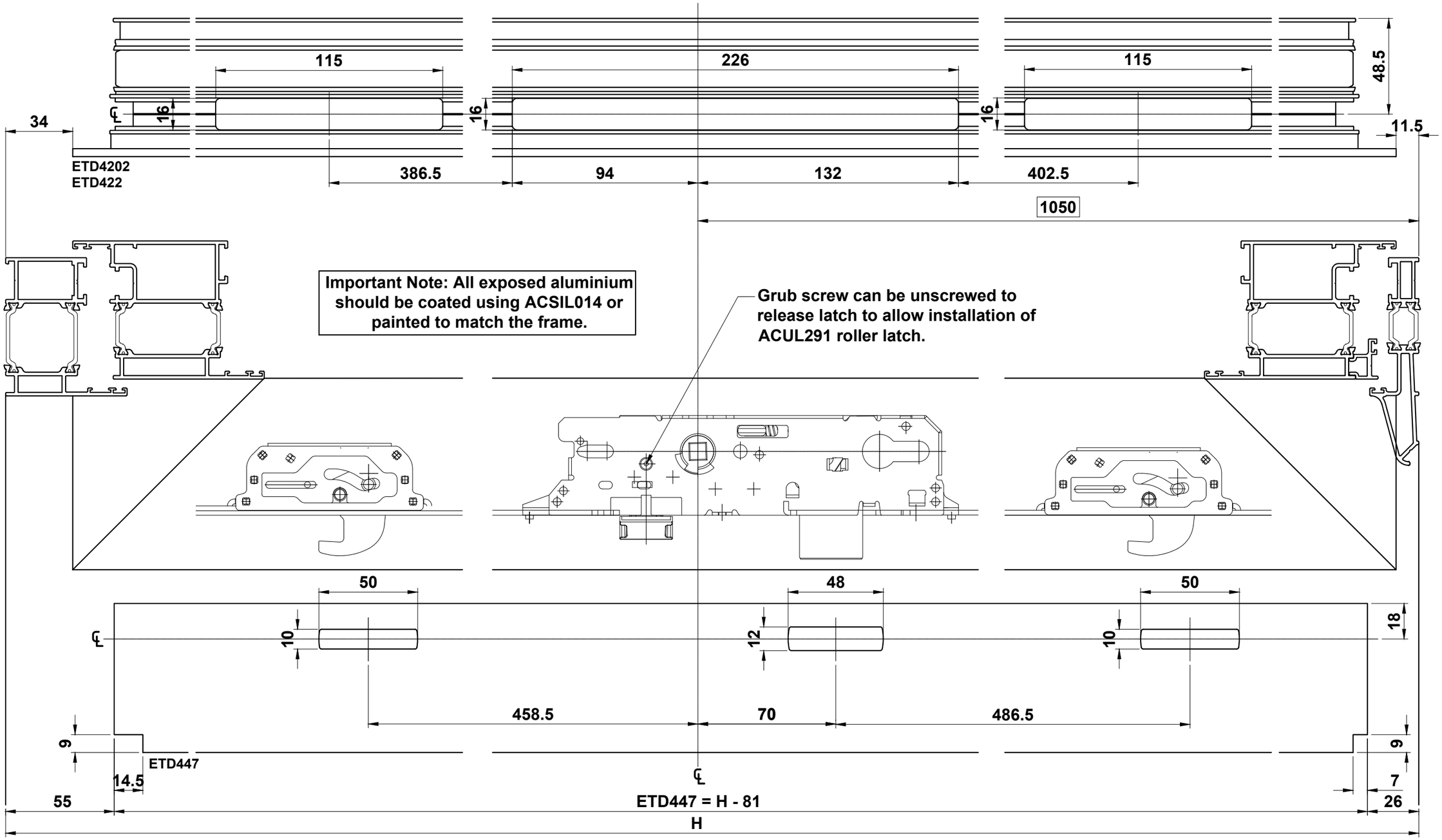

Do Not Scale From This Drawing

Flush Double Door Lift Lever Lock Preparation for Low Rebate Threshold

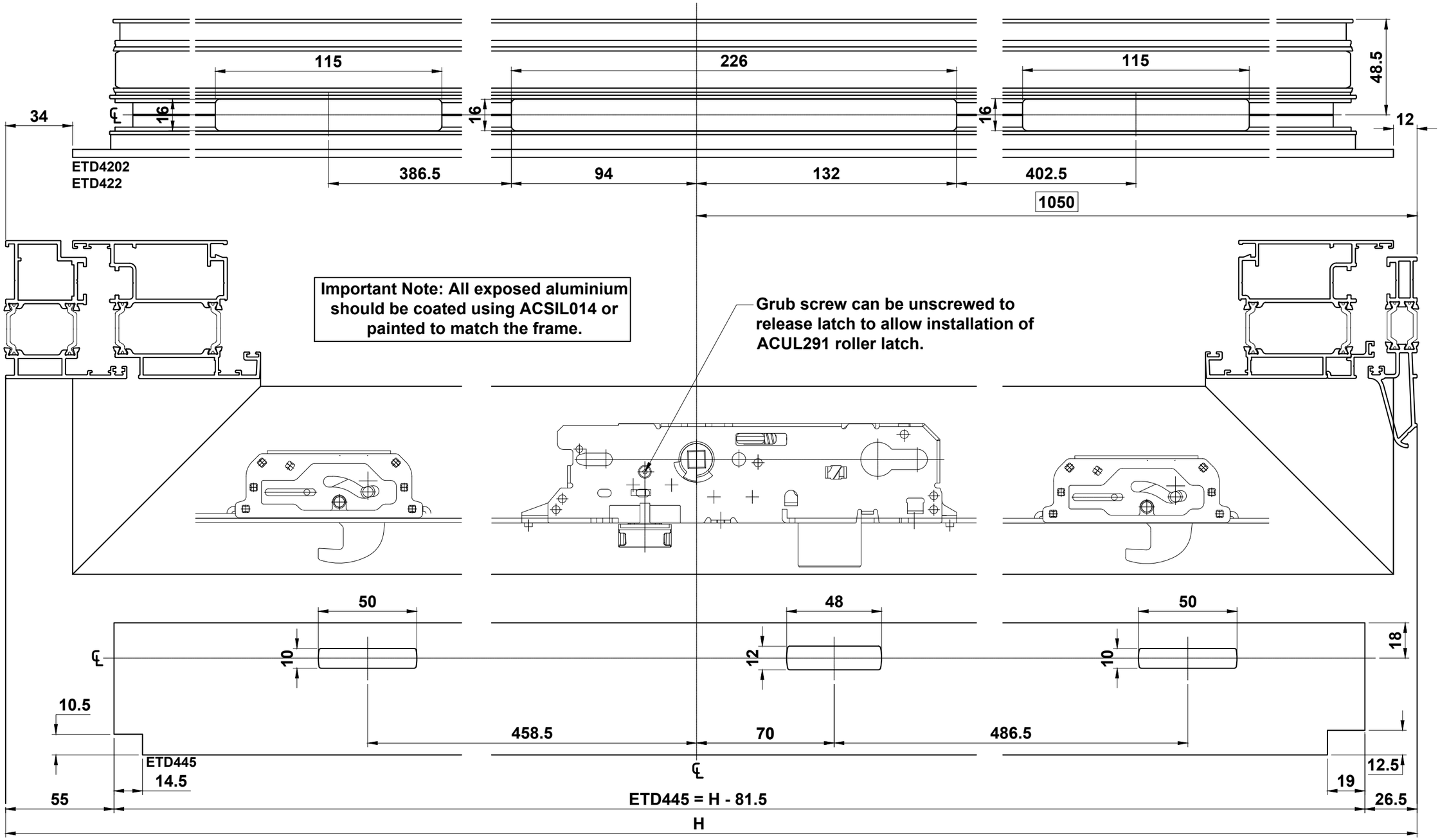

Do Not Scale From This Drawing

Flush Double Door Lift Lever Meeting Stile Assembly for Low Rebate Threshold

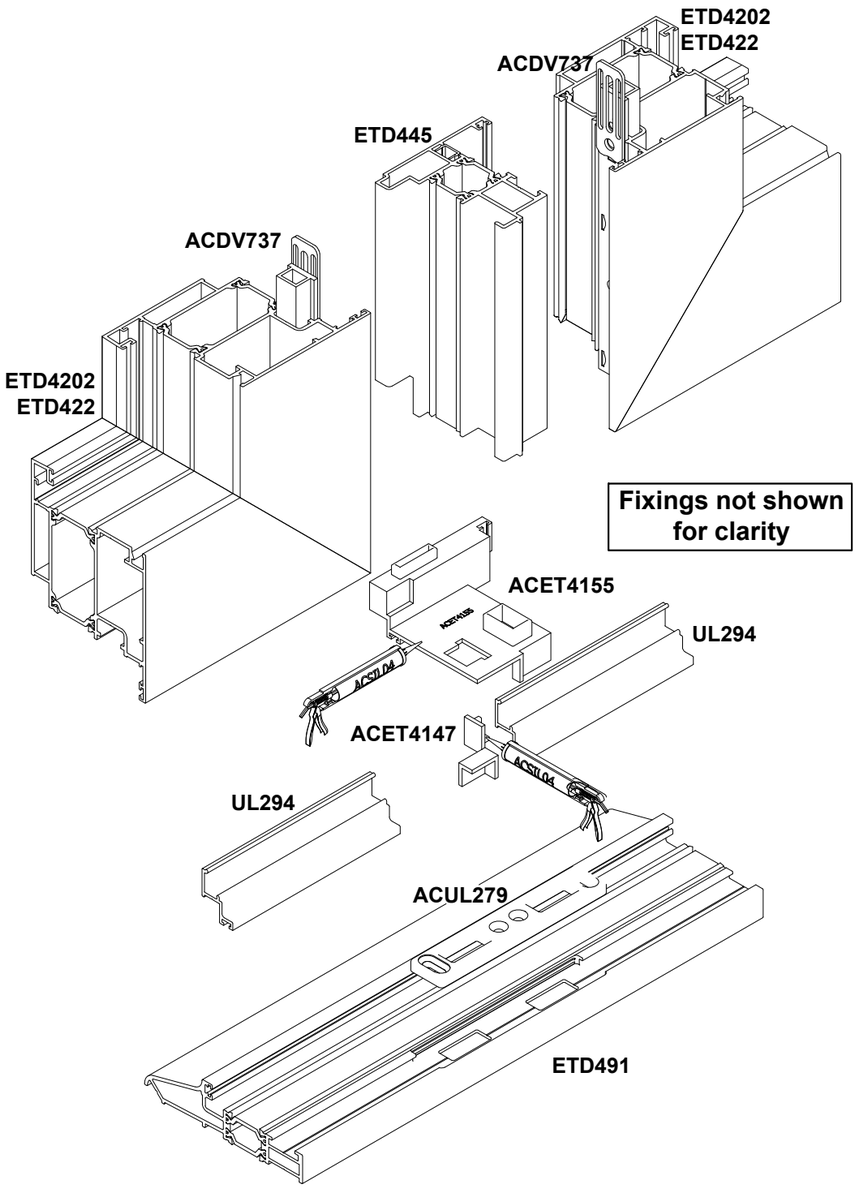

Note: All routing on outer frame require sealant to stop water leakage

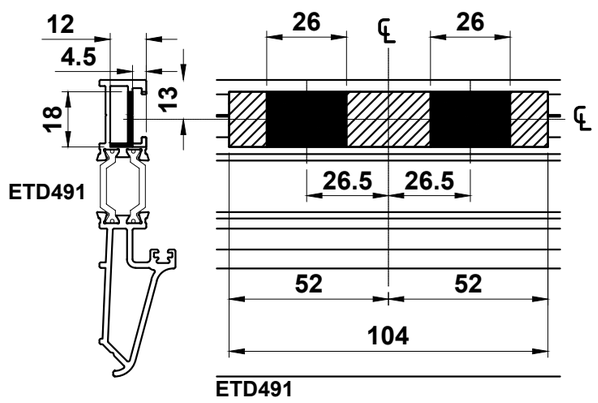

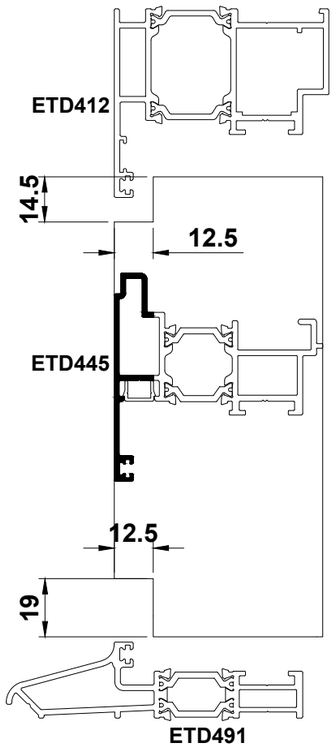

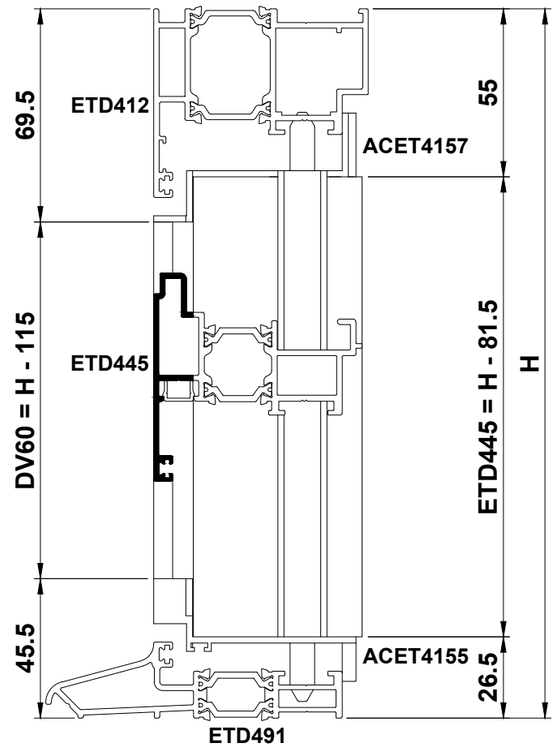

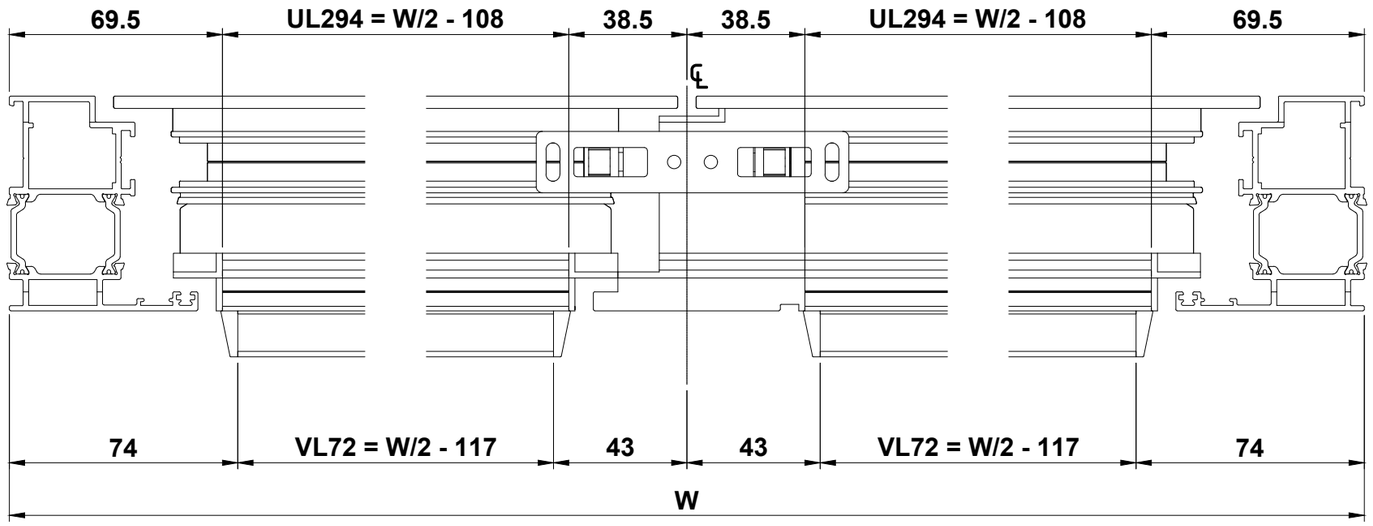

Do Not Scale From This Drawing

Flush Double Door Lift Lever Lock Preparation for Low Ramp Threshold

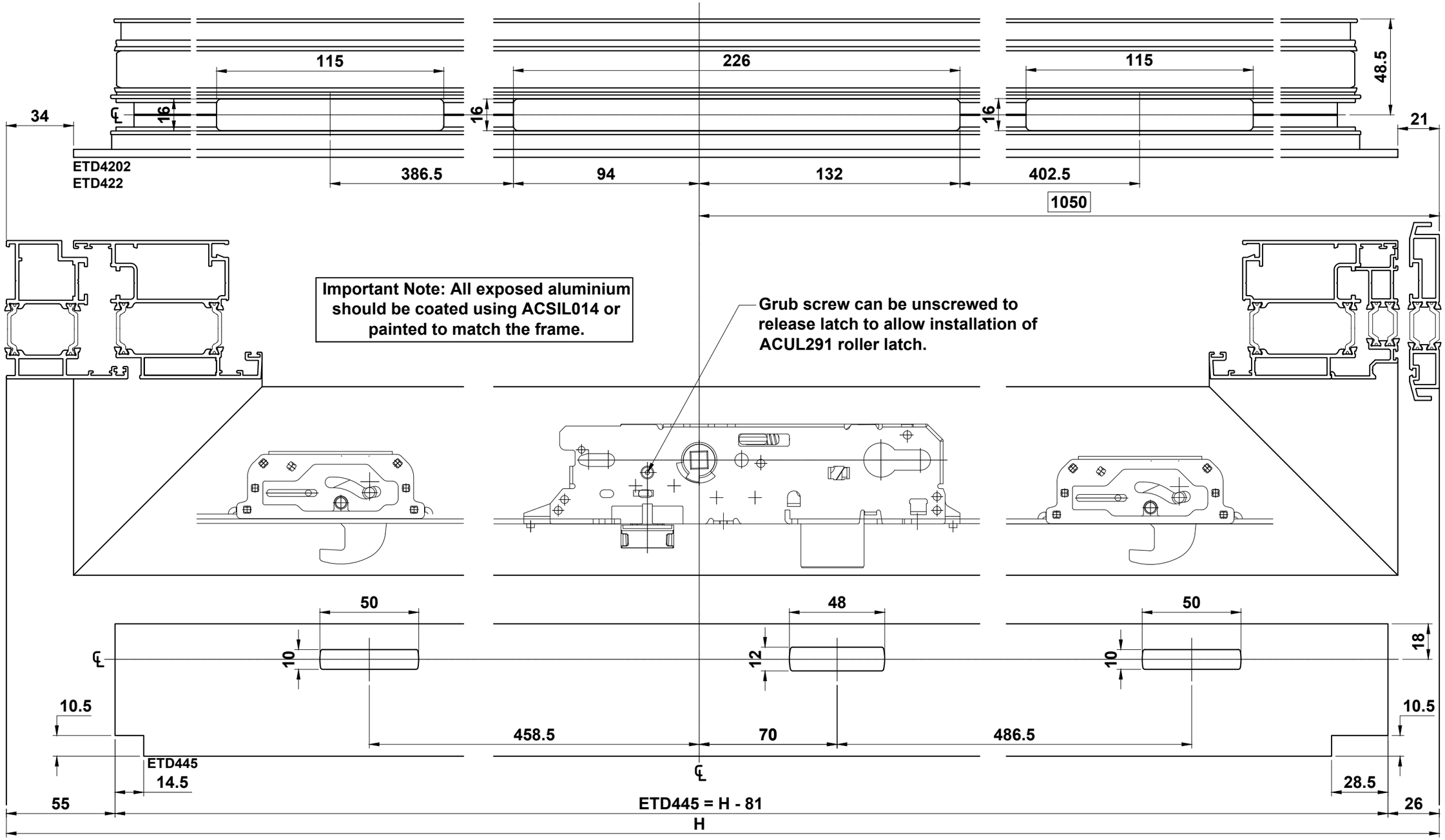

Do Not Scale From This Drawing

Flush Double Door Lift Lever Meeting Stile Assembly for Low Ramp Threshold

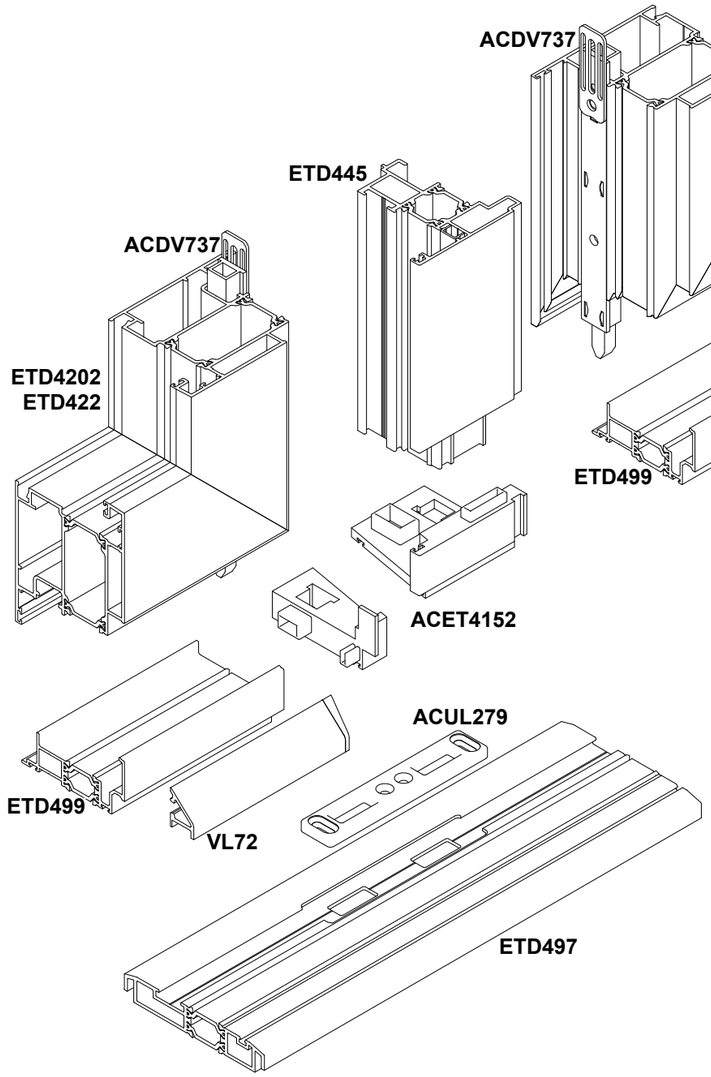

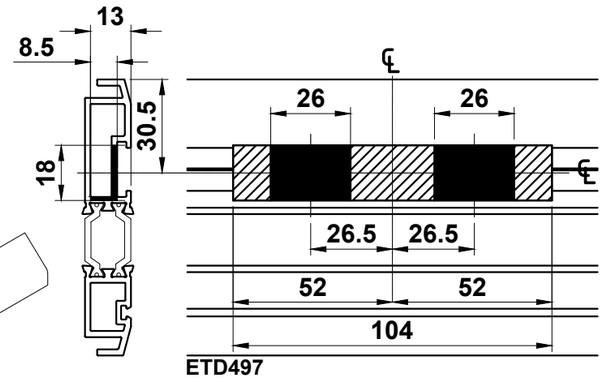

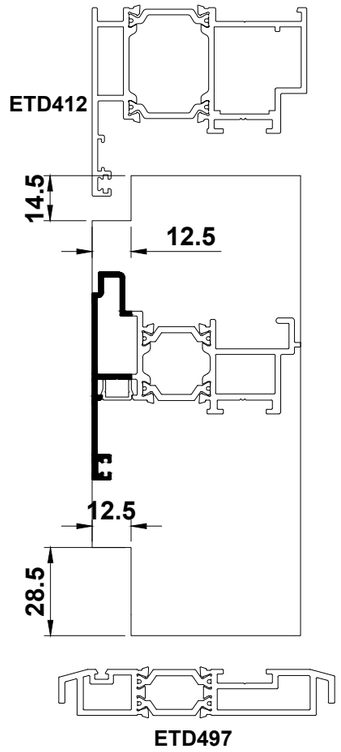

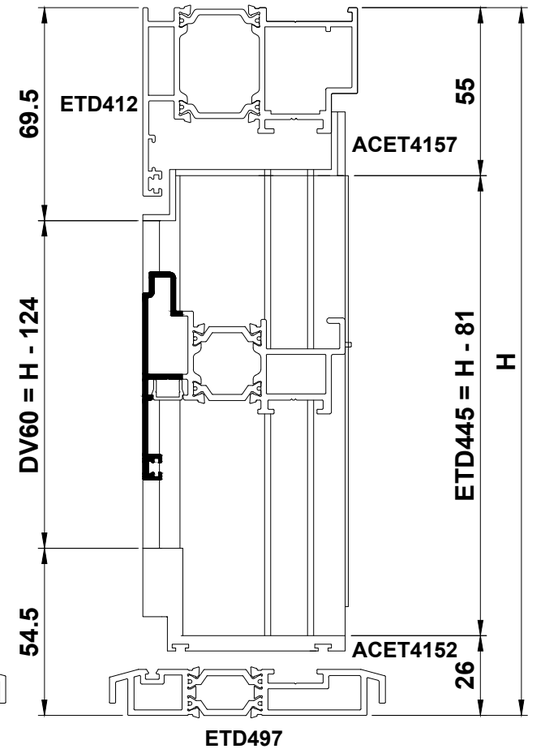

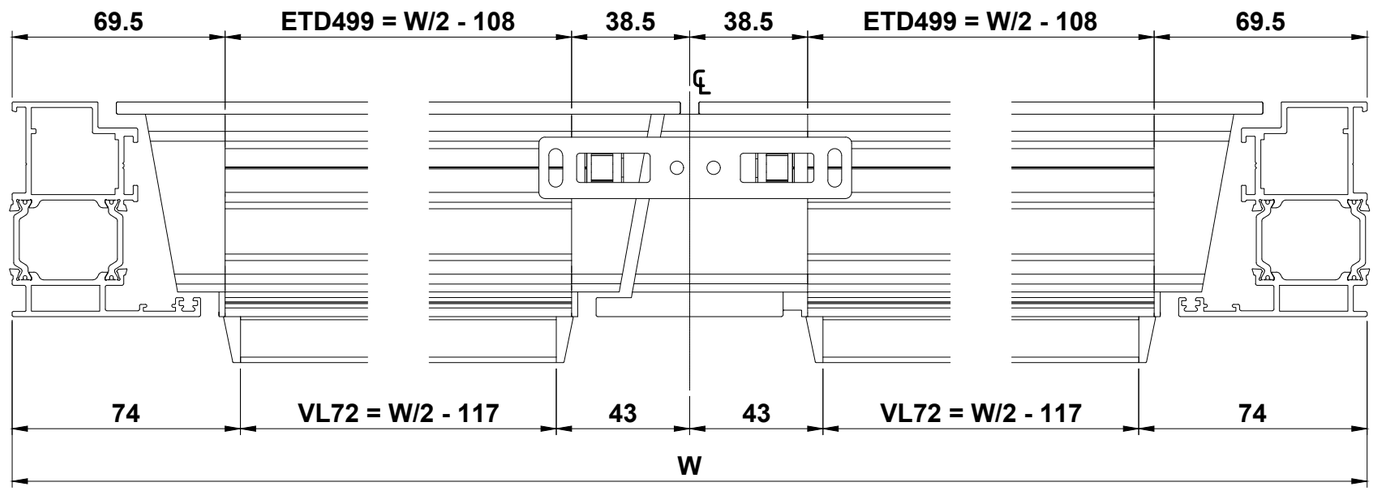

Do Not Scale From This Drawing

ACUL267 & ACUL268 Lift Lever Lock Preparation

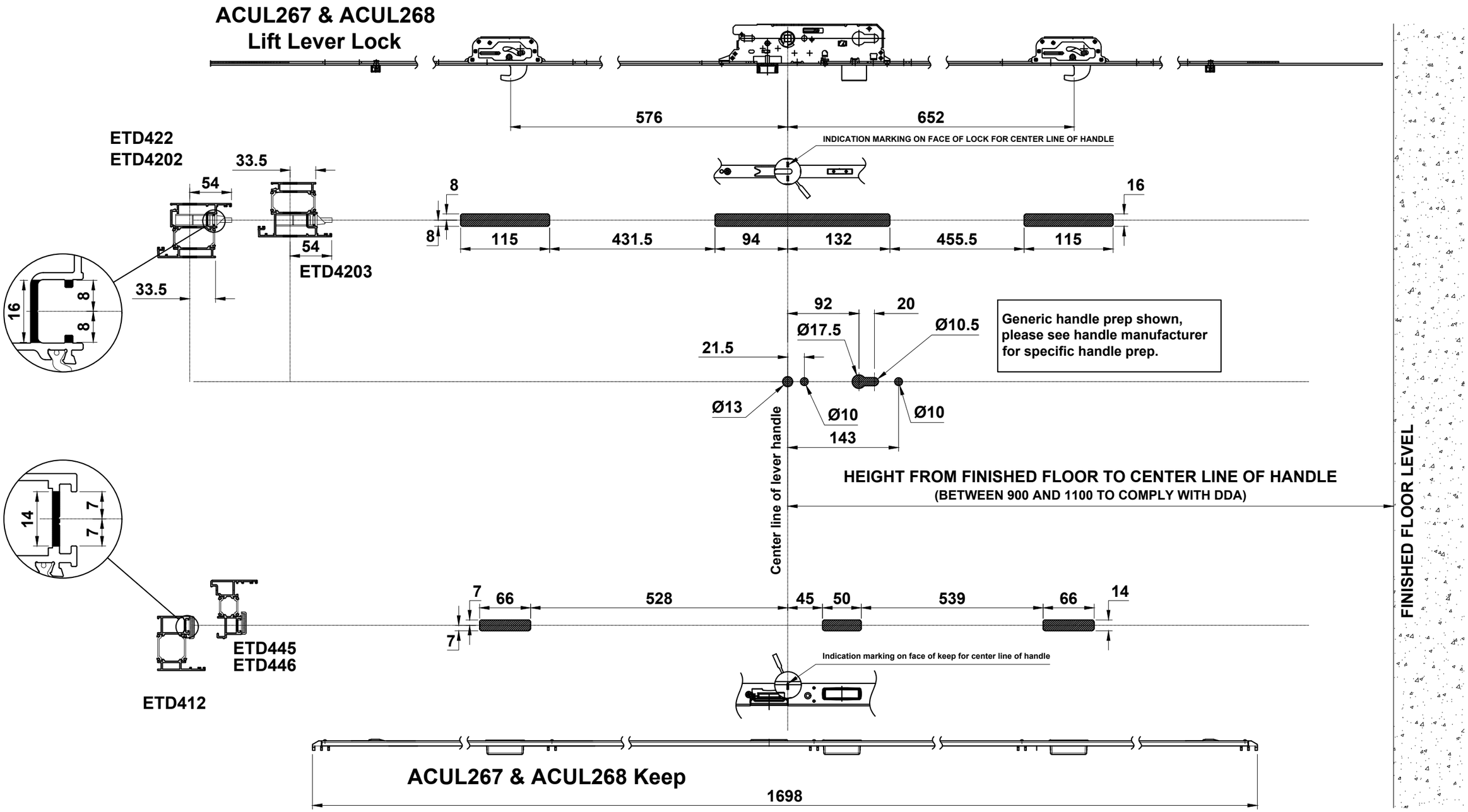

Do Not Scale From This Drawing

Flush Double Door Finger Bolt Lock Preparation for Full Frame

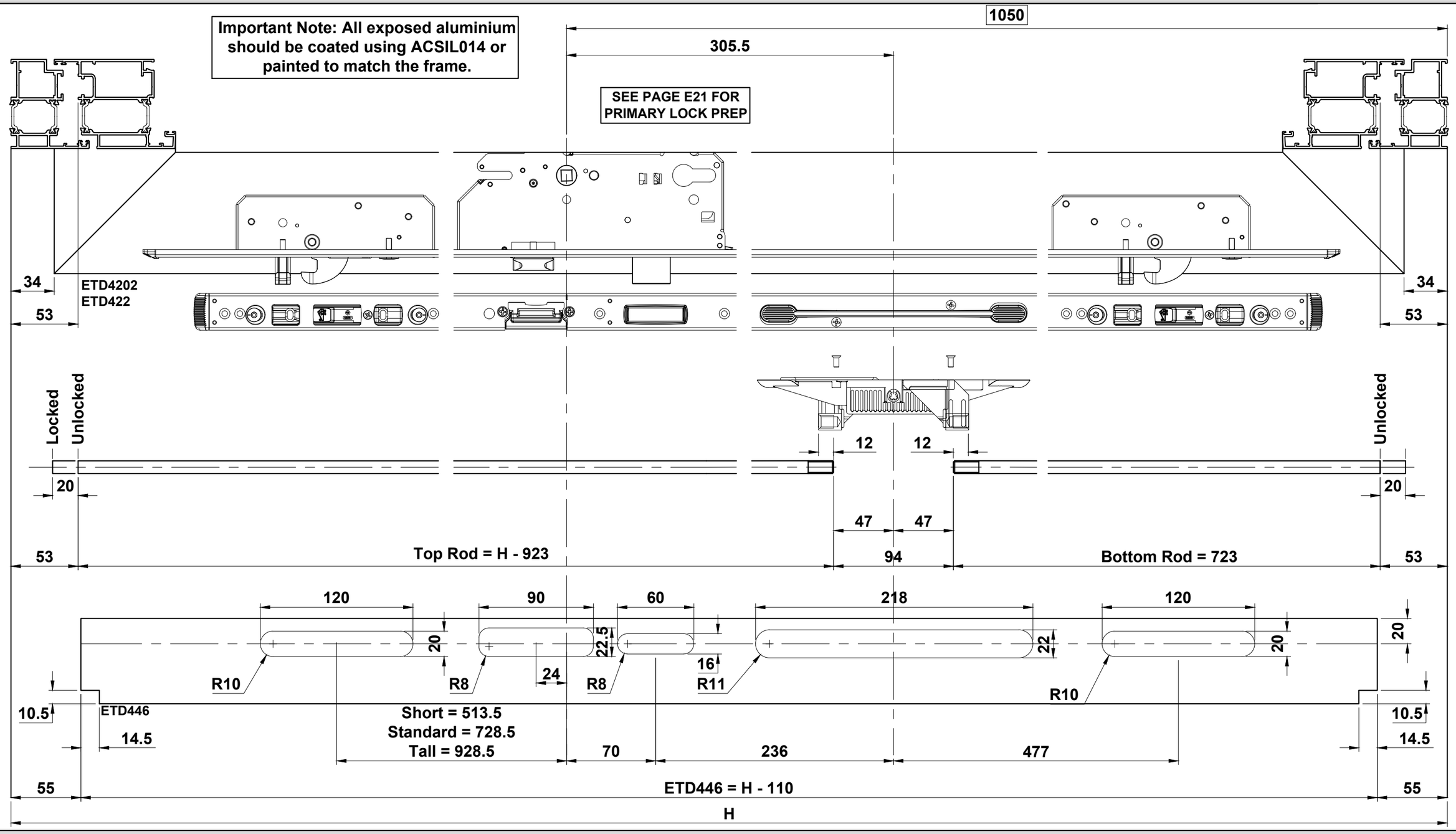

Do Not Scale From This Drawing

Flush Double Door Finger Bolt Meeting Stile Assembly for Full Frame

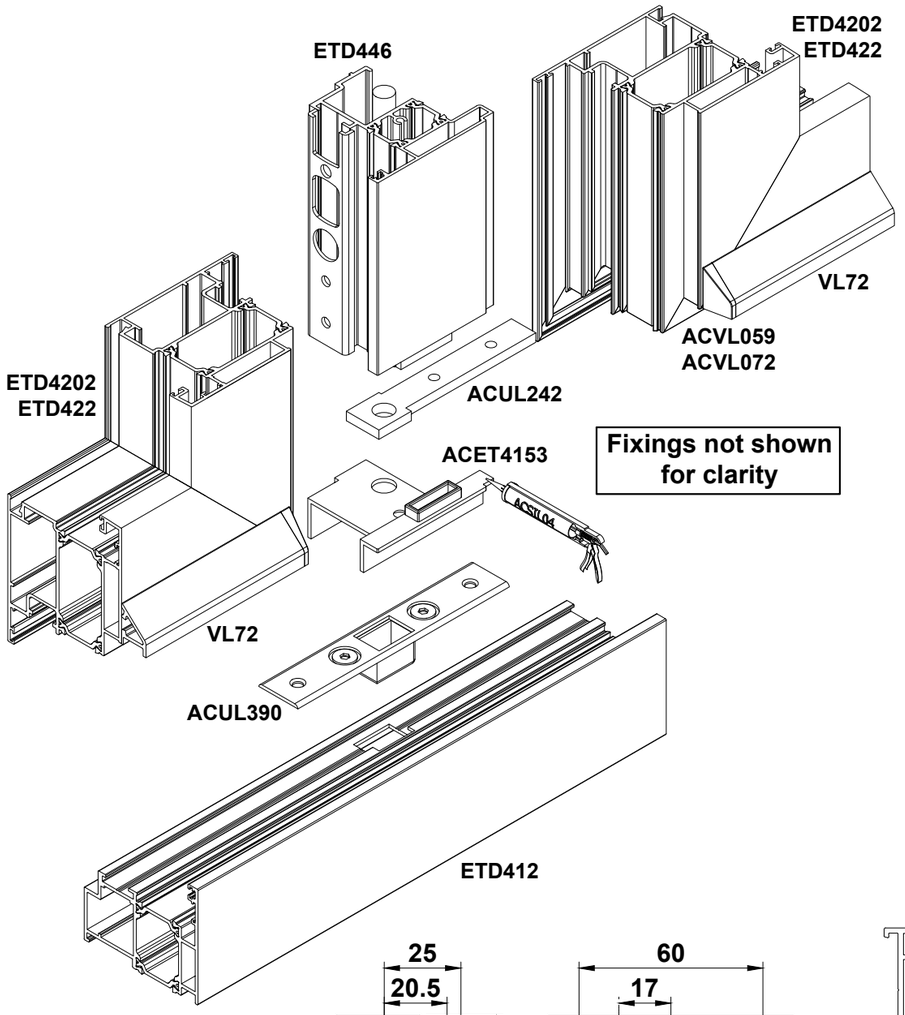

Fixings not shown for clarity

Note: All routing on outer frame require sealant to stop water leakage

Sash to be notched to allow ACUL242 to fit into position

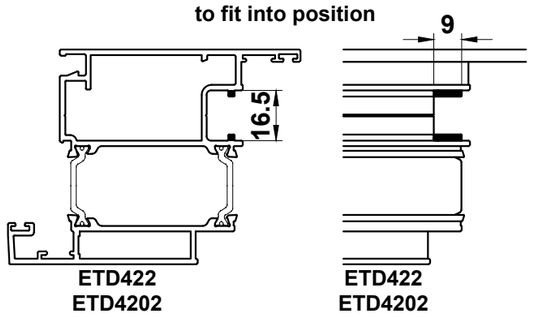

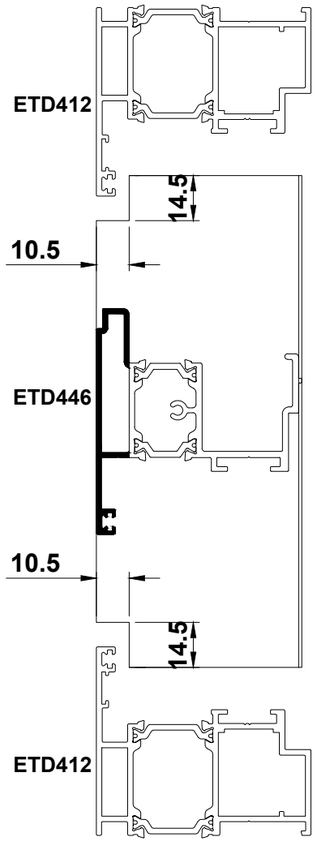

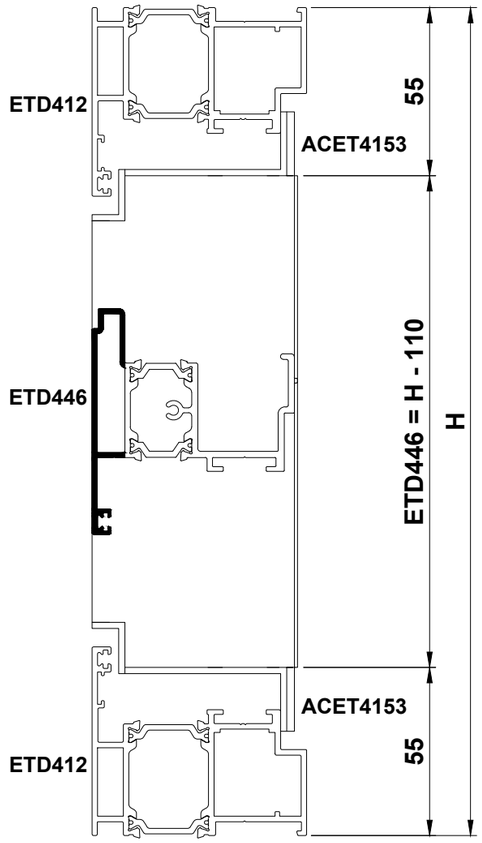

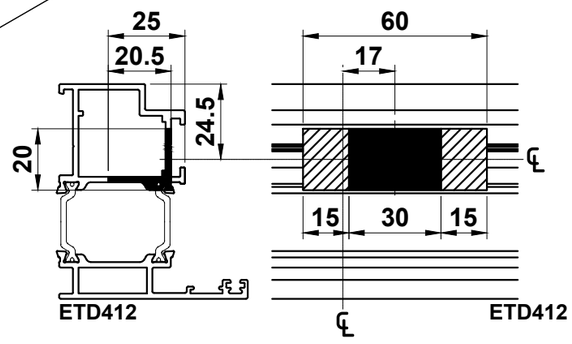

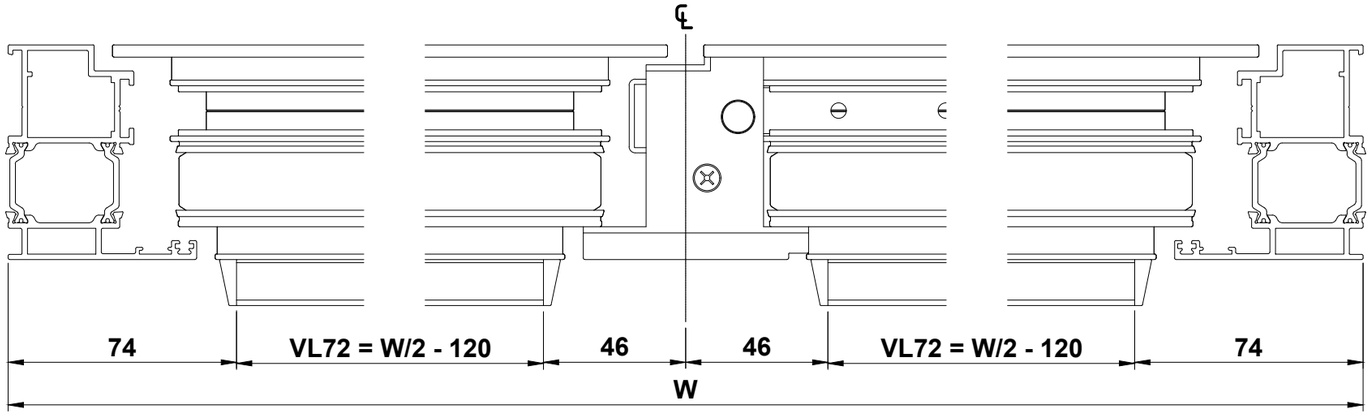

Do Not Scale From This Drawing

Flush Double Door Finger Bolt Lock Preparation for Low Rebate Threshold

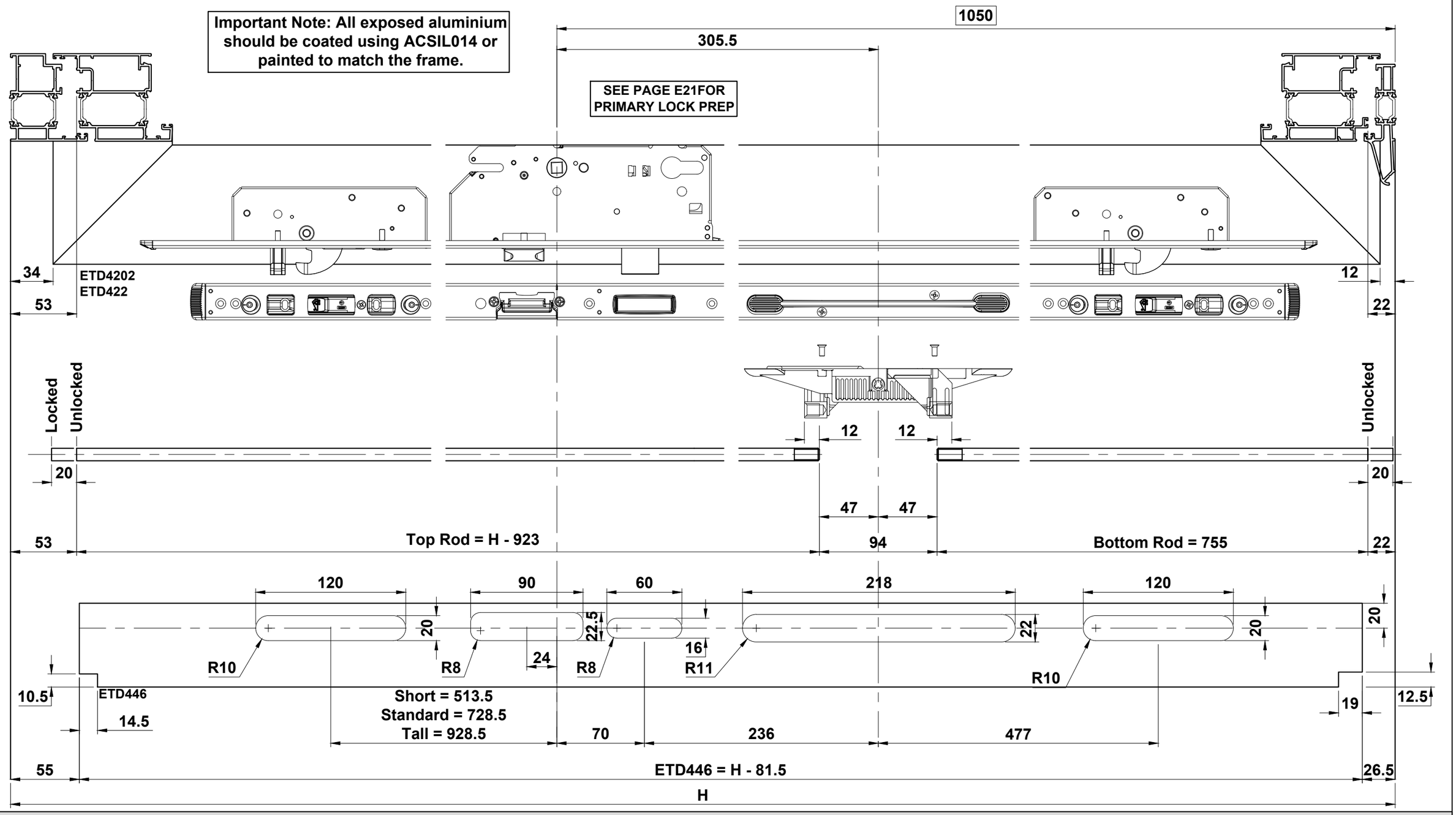

Do Not Scale From This Drawing

Flush Double Door Finger Bolt Meeting Stile Assembly for Low Rebate Threshold

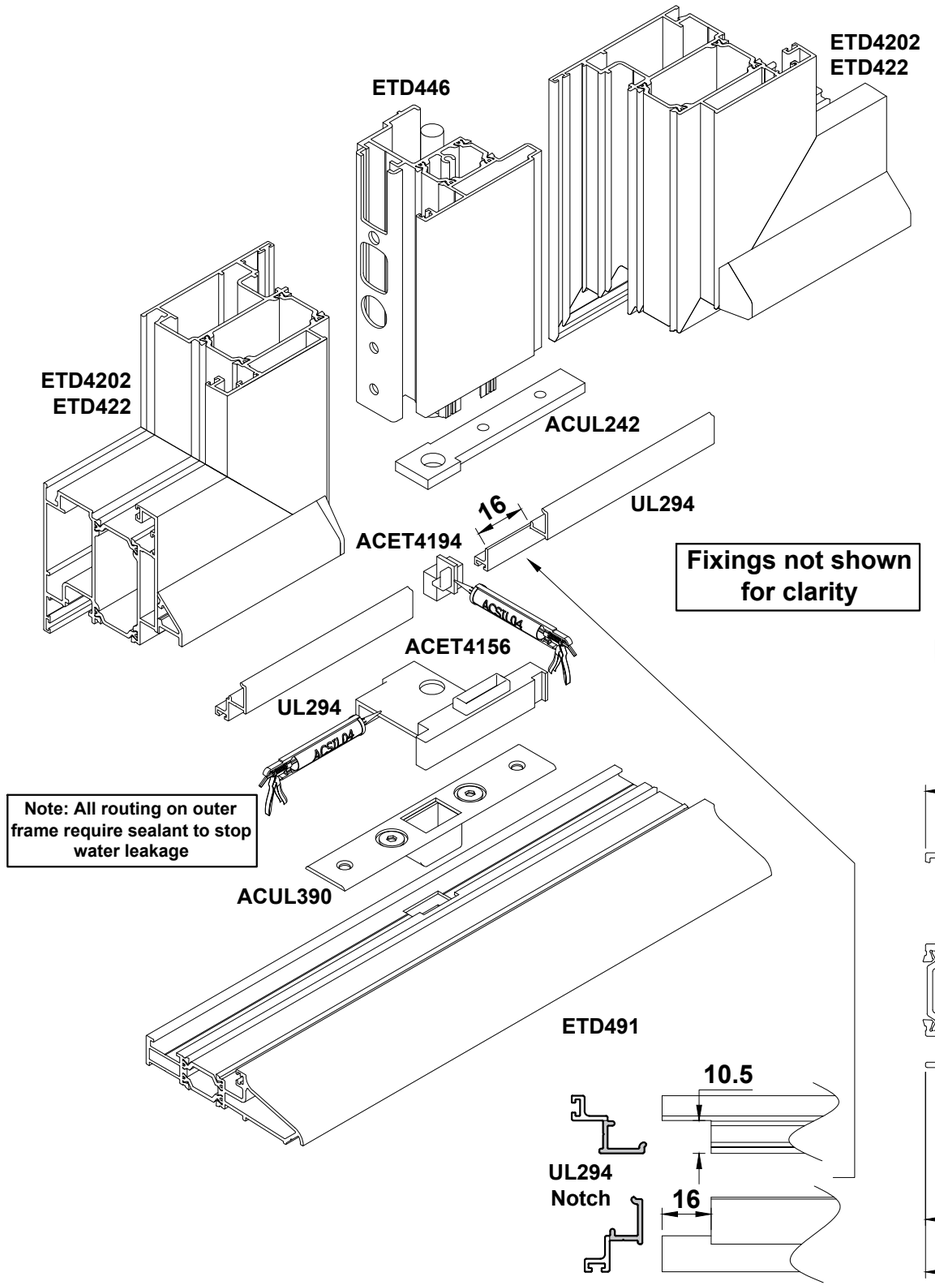

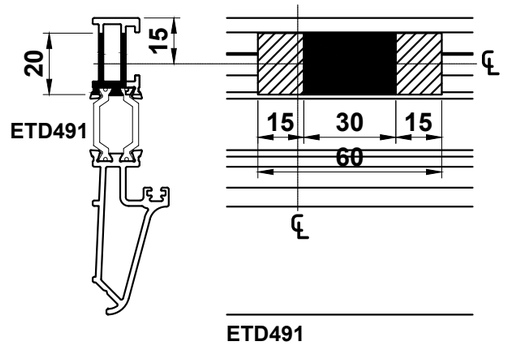

Sash to be notched to allow ACUL242 to fit into position

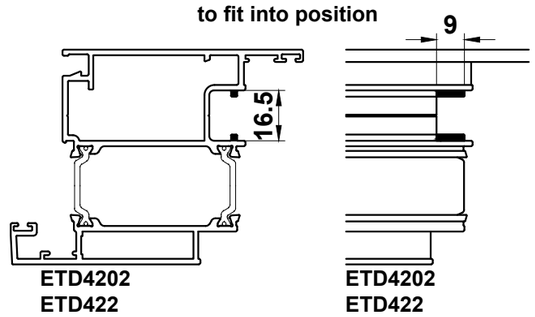

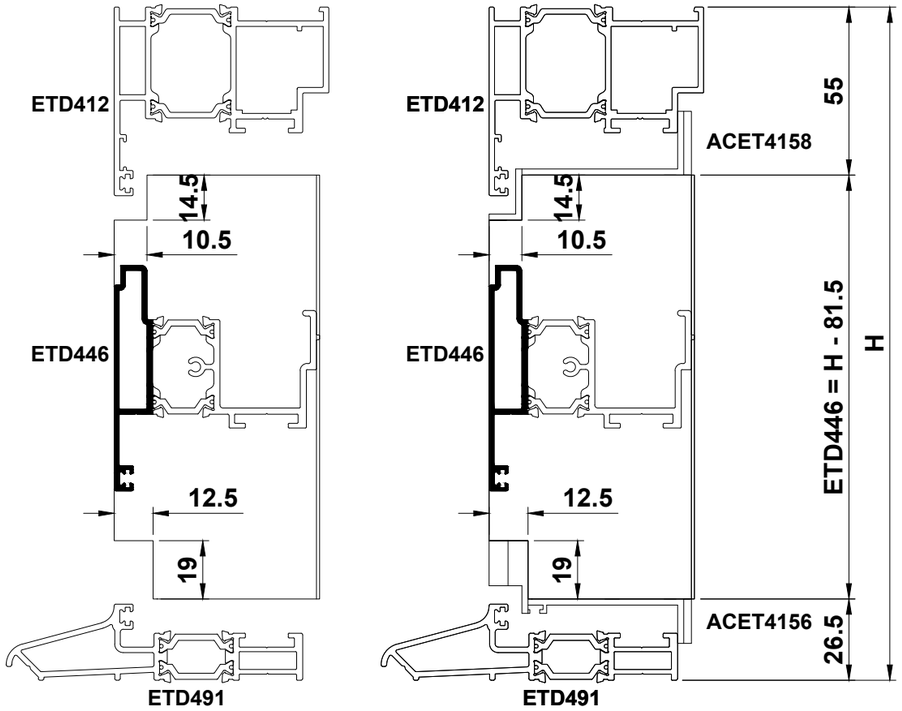

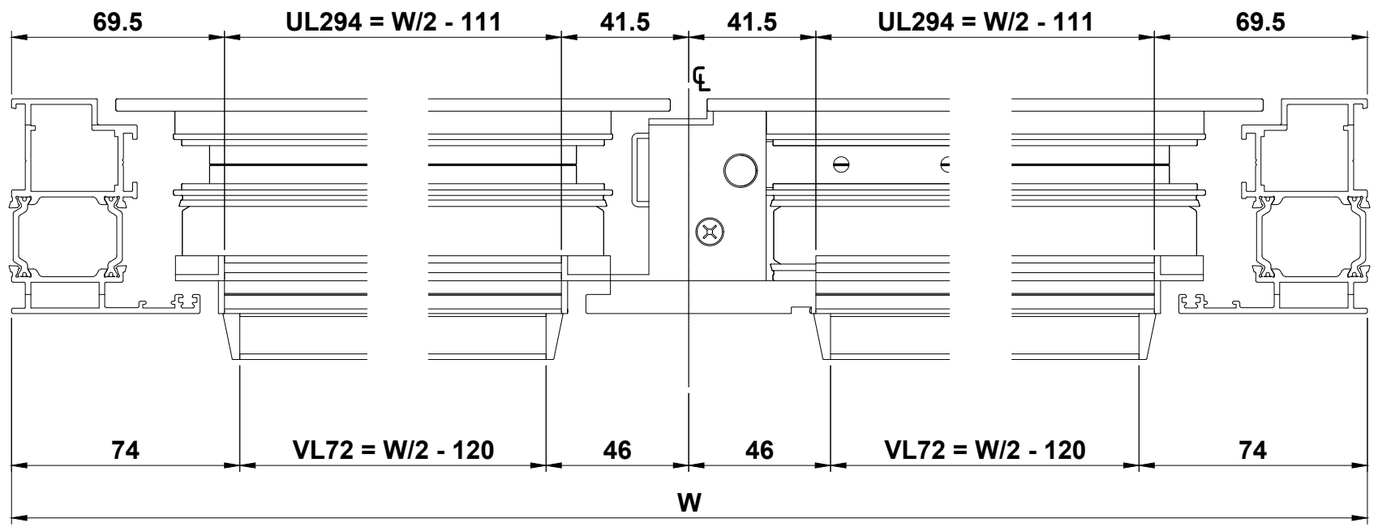

Do Not Scale From This Drawing

Flush Double Door Finger Bolt Lock Preparation for Low Ramp Threshold

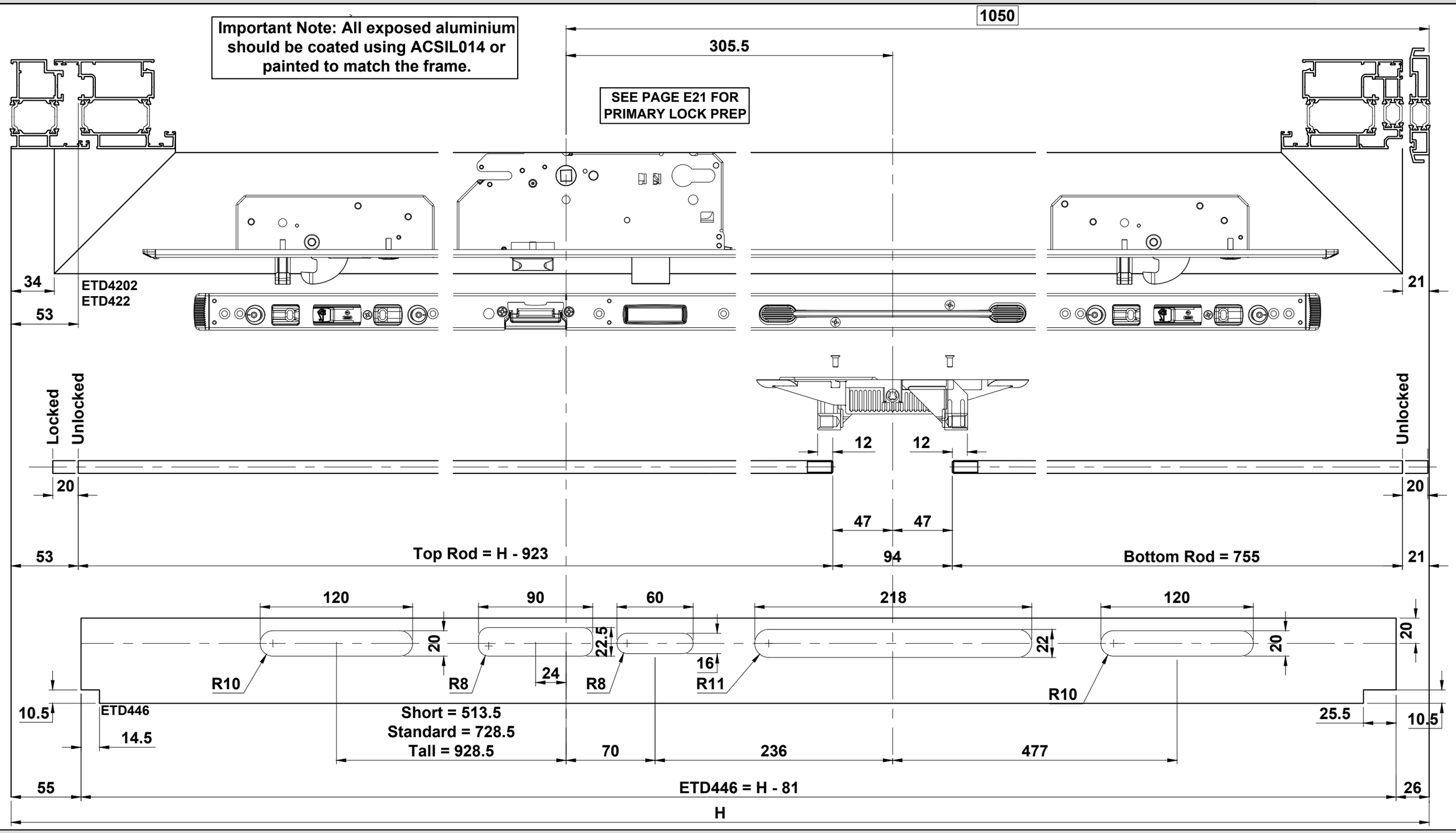

Do Not Scale From This Drawing

Flush Double Door Finger Bolt Meeting Stile Assembly for Low Ramp Threshold

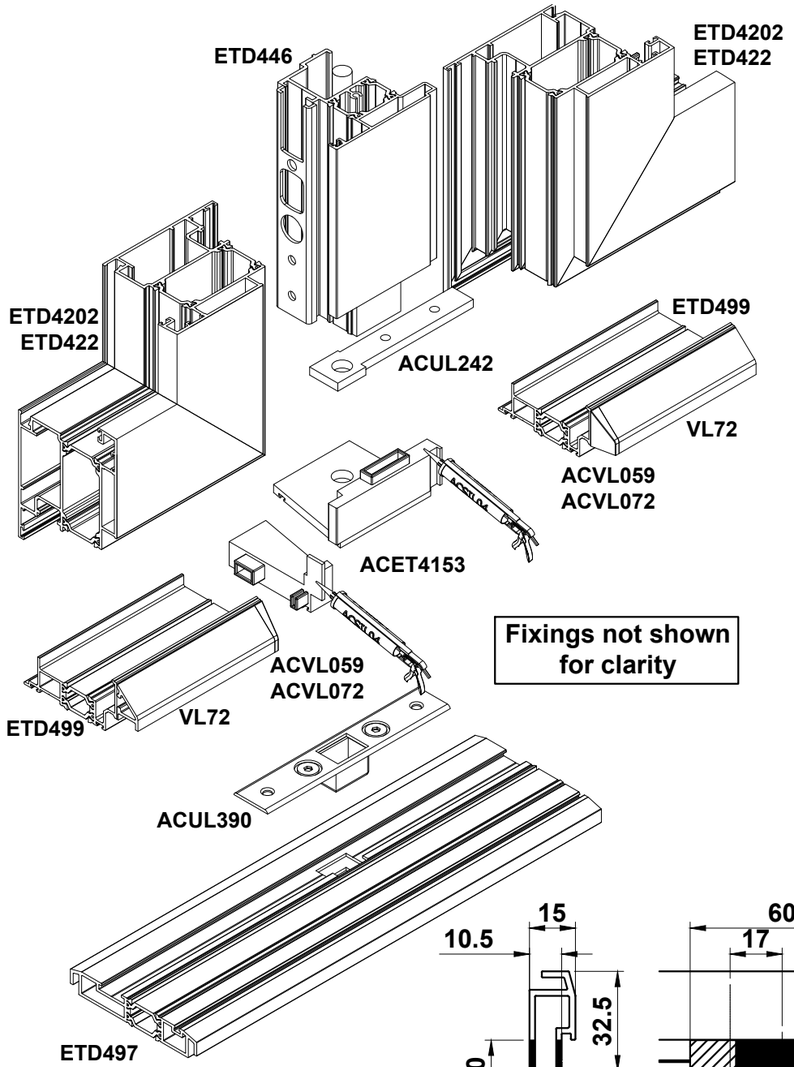

Fixings not shown for clarity

Note: All routing on outer frame require sealant to stop water leakage

Sash to be notched to allow ACUL242 to fit into position

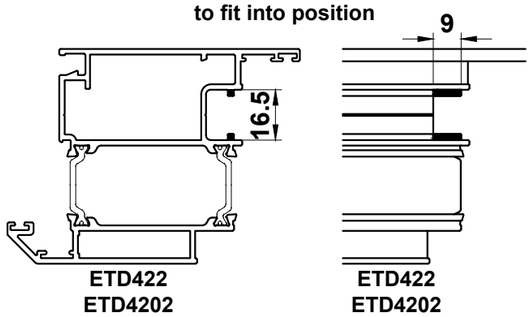

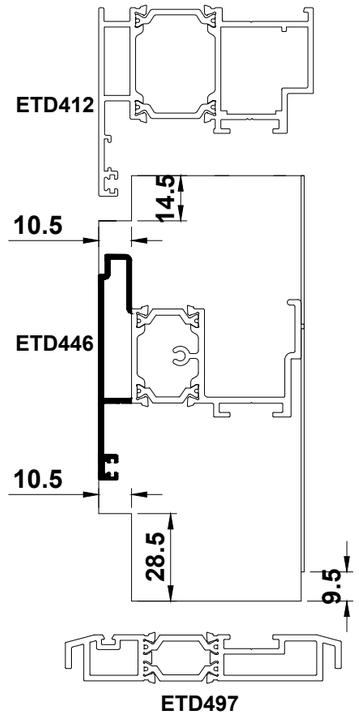

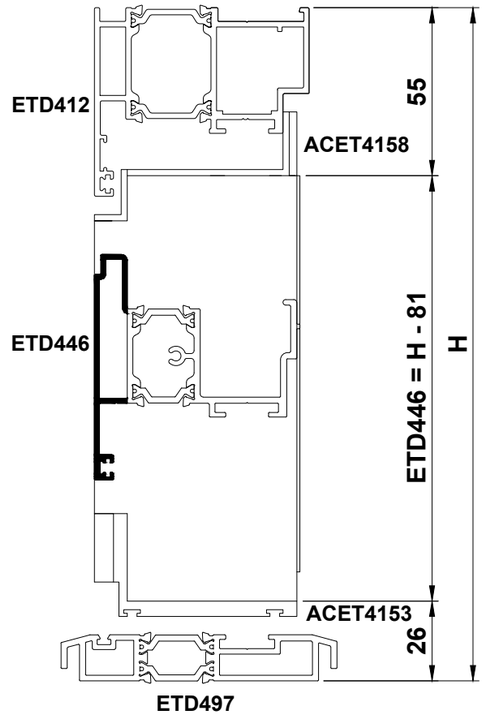

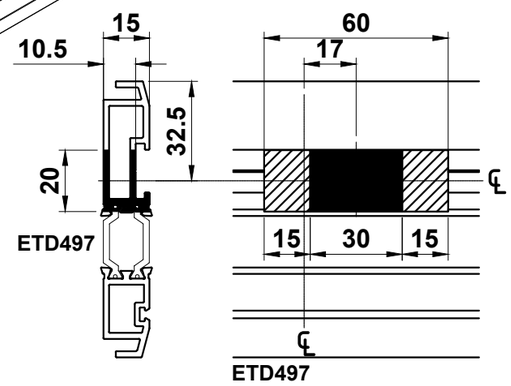

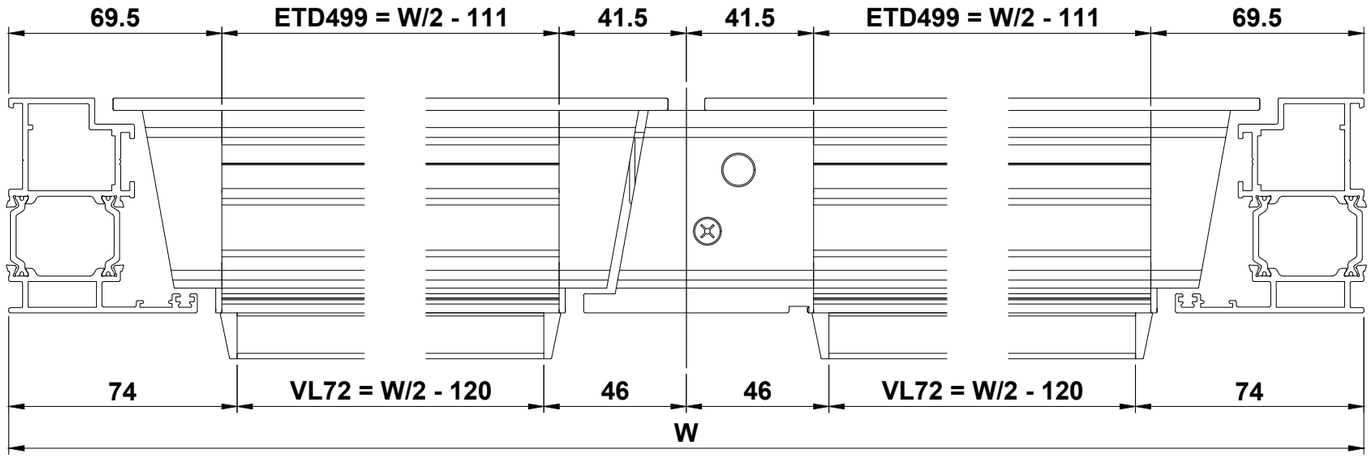

Do Not Scale From This Drawing

Letter Plate Fitting

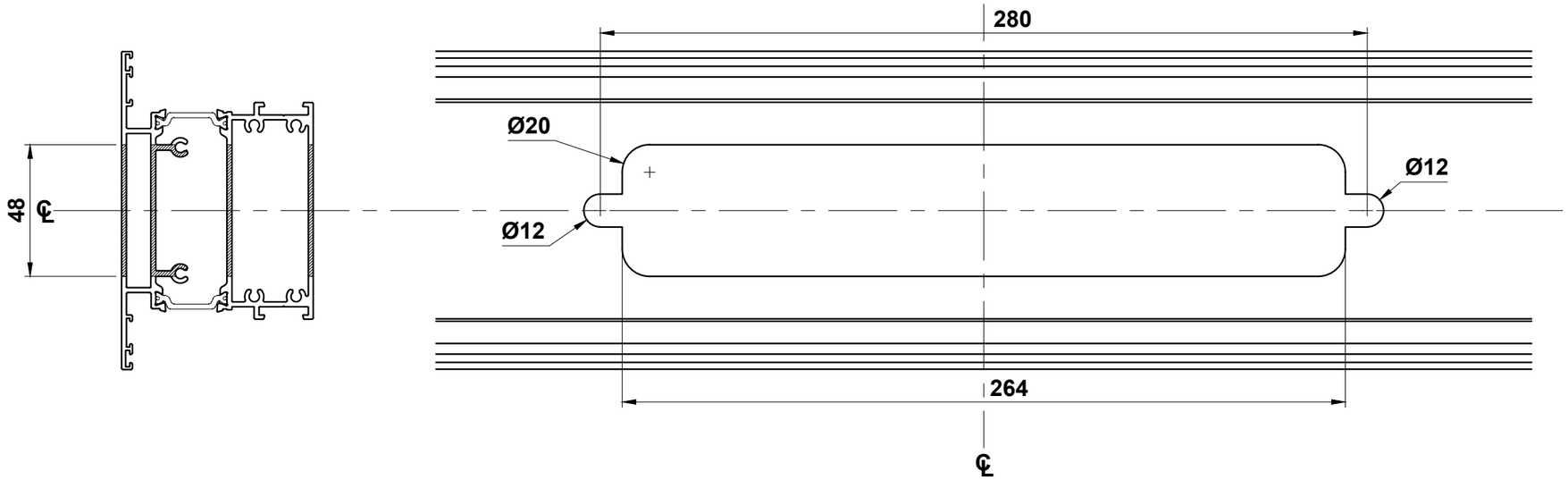

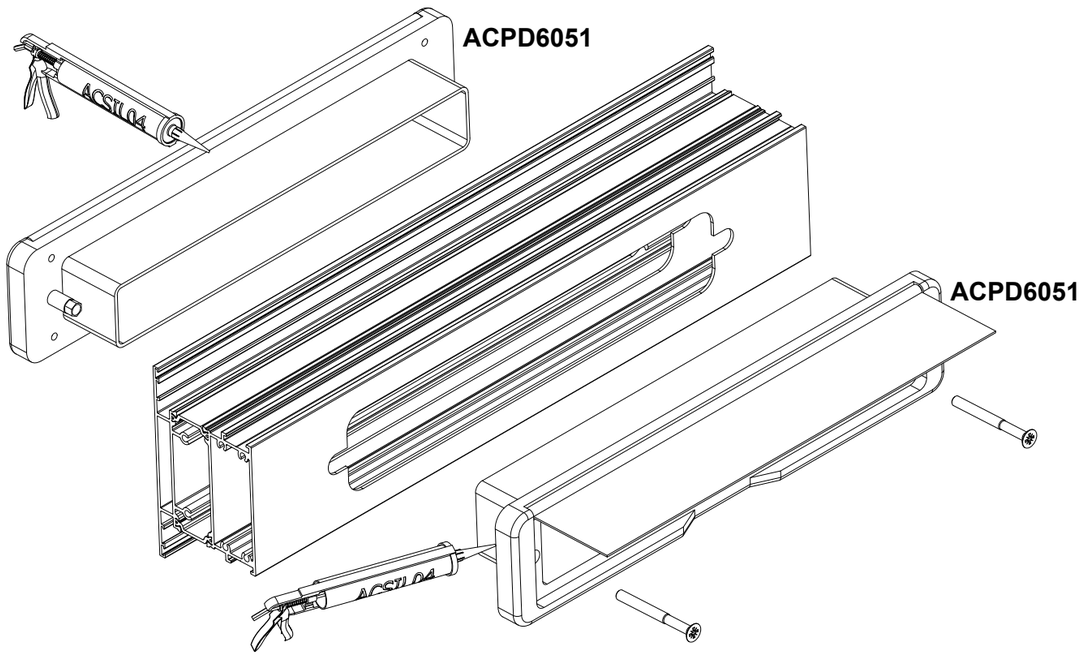

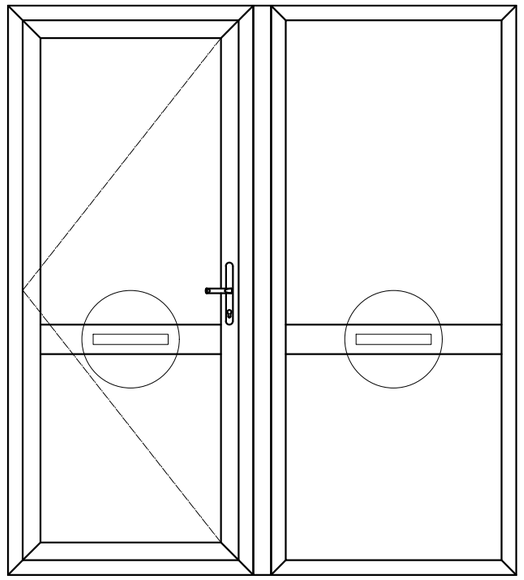

Do Not Scale From This Drawing

Glazing Chart

28mm Glazing

Integrated Gasket

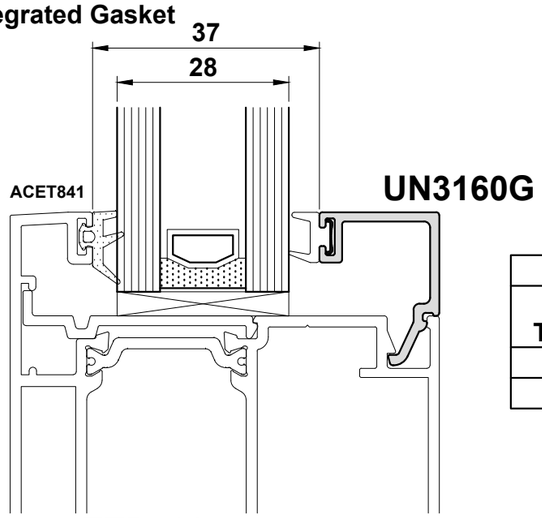

ETD402
ETD4202
ETD4301

Low Profile Gaskets		
Glazing Thickness	External Gasket	Internal Gasket
28	ACET841	-
29 (28.8)	ACET842	-

36mm Glazing

Integrated Gasket

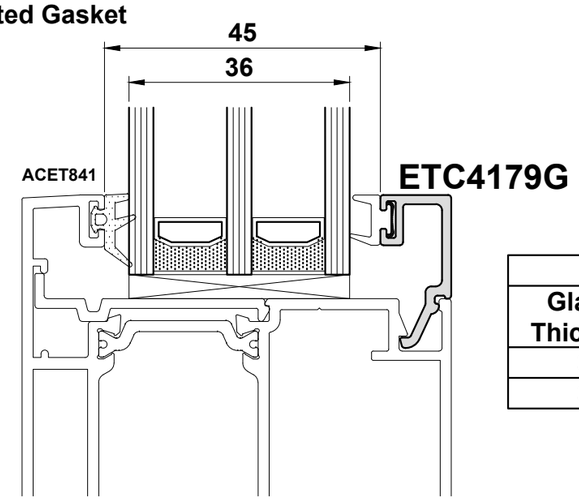

ETD402
ETD4202
ETD4301

Low Profile Gaskets		
Glazing Thickness	External Gasket	Internal Gasket
36	ACET841	-
37	ACET842	-

24-26mm Glazing

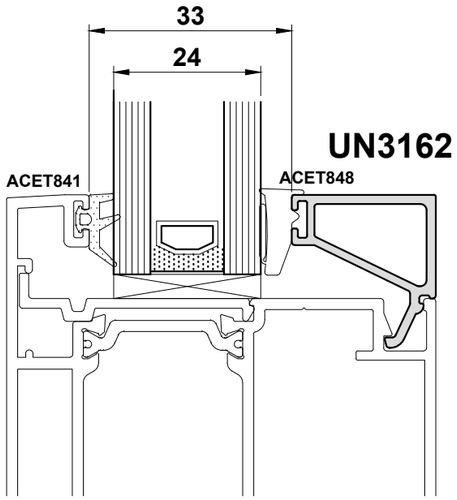

ETD402
ETD4202
ETD4301

Low Profile Gaskets		
Glazing Thickness	External Gasket	Internal Gasket
24	ACET841	ACET848
25	ACET842	ACET848
26	ACET843	ACET848

Standard Gaskets		
Glazing Thickness	External Gasket	Internal Gasket
24	ACVG31	ACUN036
25	ACVG231	ACUN036
26	ACVG231	ACUN036

28-30mm Glazing

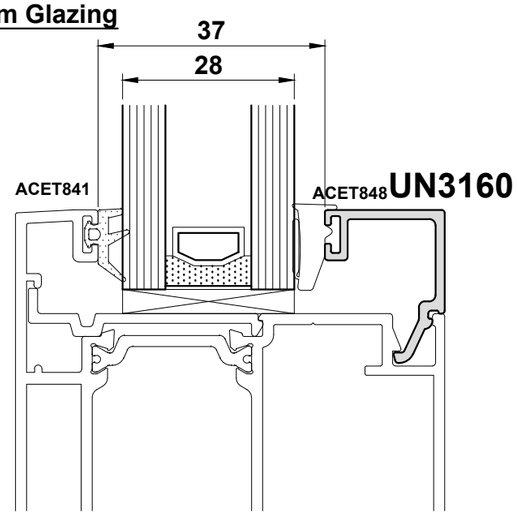

ETD402
ETD4202
ETD4301

Low Profile Gaskets		
Glazing Thickness	External Gasket	Internal Gasket
28	ACET841	ACET848
29 (28.8)	ACET842	ACET848
30	ACET843	ACET848

Standard Gaskets		
Glazing Thickness	External Gasket	Internal Gasket
28	ACVG31	ACUN036
29 (28.8)	ACVG231	ACUN036
30	ACVG231	ACUN036

Do Not Scale From This Drawing

Glazing Chart

30-32mm Glazing

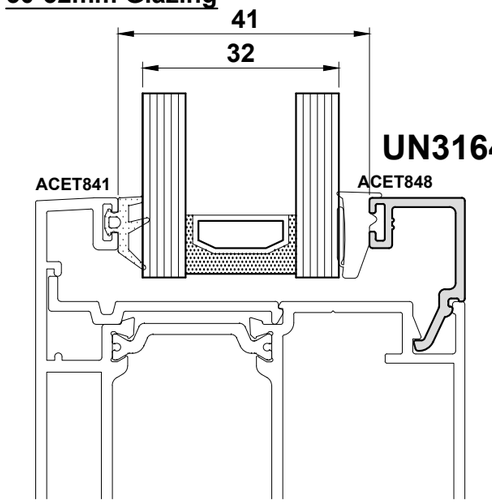

ETD402
ETD4202
ETD4301

Low Profile Gaskets		
Glazing Thickness	External Gasket	Internal Gasket
30	ACET841	ACET848
31	ACET842	ACET848
32	ACET843	ACET848

Standard Gaskets		
Glazing Thickness	External Gasket	Internal Gasket
30	ACVG31	ACUN036
31	ACVG231	ACUN036
32	ACVG231	ACUN036

36-38mm Glazing

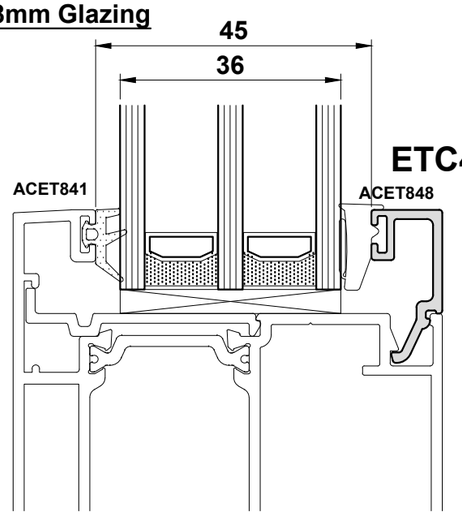

ETD402
ETD4202
ETD4301

Low Profile Gaskets		
Glazing Thickness	External Gasket	Internal Gasket
36	ACET841	ACET848
37	ACET842	ACET848
38	ACET843	ACET848

Standard Gaskets		
Glazing Thickness	External Gasket	Internal Gasket
36	ACVG31	ACUN036
37	ACVG231	ACUN036
38	ACVG231	ACUN036

39-41mm Glazing

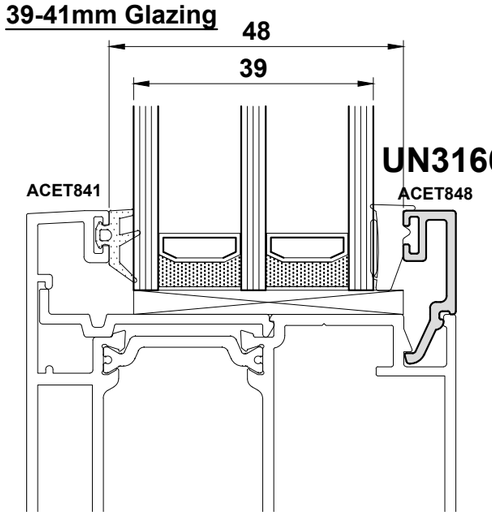

ETD402
ETD4202
ETD4301

Low Profile Gaskets		
Glazing Thickness	External Gasket	Internal Gasket
39	ACET841	ACET848
40	ACET842	ACET848
41	ACET843	ACET848

Standard Gaskets		
Glazing Thickness	External Gasket	Internal Gasket
39	ACVG31	ACUN036
40	ACVG231	ACUN036
41	ACVG231	ACUN036

44-46mm Glazing

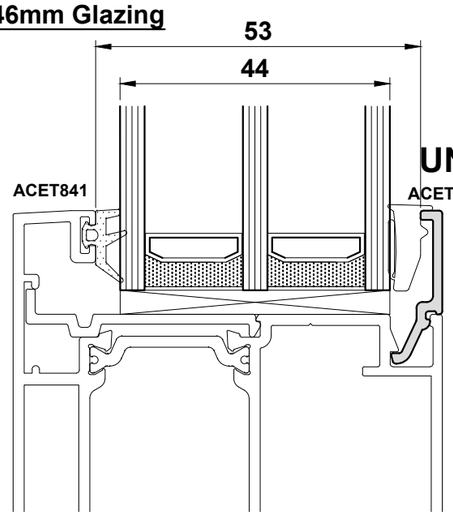

ETD402
ETD4202
ETD4301

Low Profile Gaskets		
Glazing Thickness	External Gasket	Internal Gasket
44	ACET841	ACET848
45	ACET842	ACET848
46	ACET843	ACET848

Standard Gaskets		
Glazing Thickness	External Gasket	Internal Gasket
44	ACVG31	ACUN036
45	ACVG231	ACUN036
46	ACVG231	ACUN036

Do Not Scale From This Drawing

Glazing Chart

27-29mm Glazing

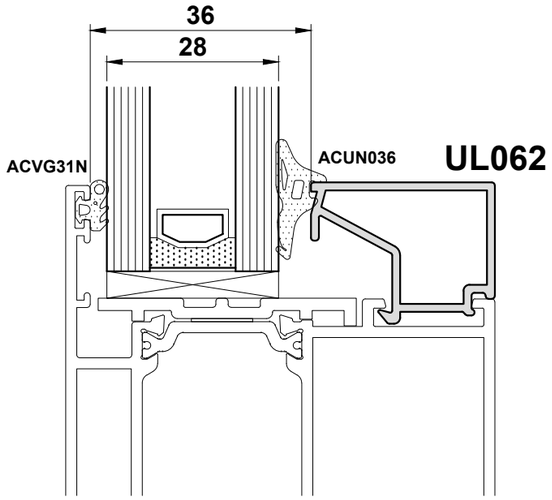

ETD404
ETD422

ETD430

Low Profile Gaskets		
Glazing Thickness	External Gasket	Internal Gasket
27	ACET841	ACET848
28	ACET842	ACET848
29 (28.8)	ACET843	ACET848

Standard Gaskets		
Glazing Thickness	External Gasket	Internal Gasket
27	ACVG31N	ACUN036
28	ACVG231	ACUN036
29 (28.8)	ACVG231	ACUN036

30-32mm Glazing

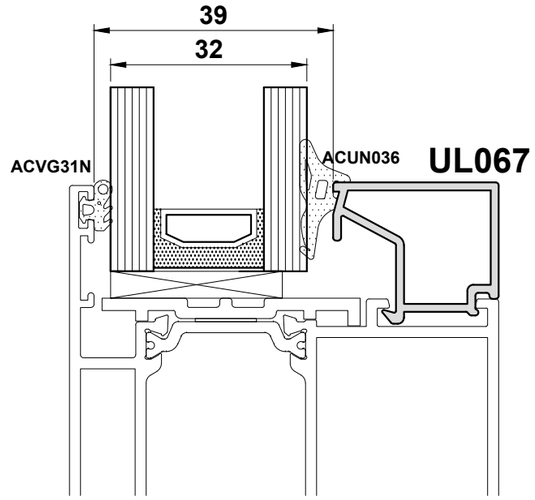

ETD404
ETD422

ETD430

Low Profile Gaskets		
Glazing Thickness	External Gasket	Internal Gasket
30	ACET841	ACET848
31	ACET842	ACET848
32	ACET843	ACET848

Standard Gaskets		
Glazing Thickness	External Gasket	Internal Gasket
30	ACVG31N	ACUN036
31	ACVG231	ACUN036
32	ACVG231	ACUN036

36mm Glazing

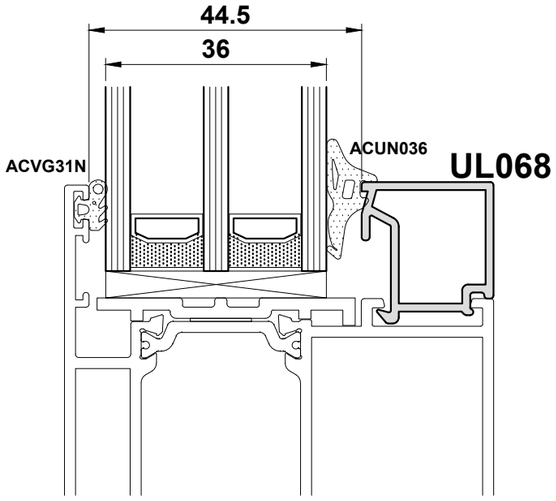

ETD404
ETD422

ETD430

Low Profile Gaskets		
Glazing Thickness	External Gasket	Internal Gasket
35	ACET841	ACET848
36	ACET842	ACET848
37	ACET843	ACET848

Standard Gaskets		
Glazing Thickness	External Gasket	Internal Gasket
35	ACVG31N	ACUN036
36	ACVG231	ACUN036
37	ACVG231	ACUN036

42mm Glazing

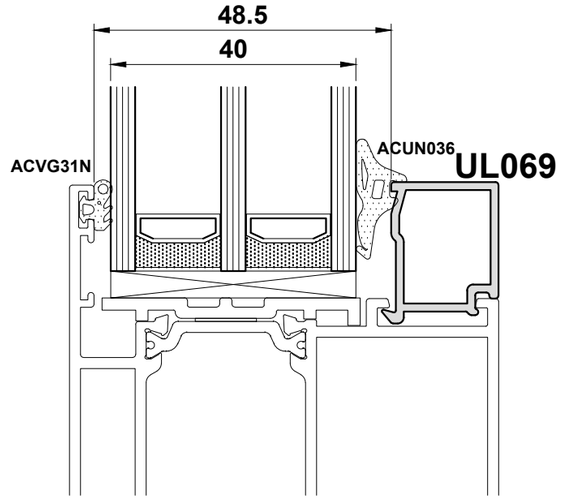

ETD404
ETD422

ETD430

Low Profile Gaskets		
Glazing Thickness	External Gasket	Internal Gasket
39	ACET841	ACET848
40	ACET842	ACET848
41	ACET843	ACET848
42	ACET843	ACET848

Standard Gaskets		
Glazing Thickness	External Gasket	Internal Gasket
39	ACVG31N	ACUN036
40	ACVG231	ACUN036
41	ACVG231	ACUN036
42	ACVG231	ACUN033

Do Not Scale From This Drawing

QUICK-GLAZE BEAD INSTALLATION

1. INSTALL GLASS UNIT, ENSURING IT HAS BEEN PUSHED FORWARD TO ENGAGE COMPRESSION OF E GASKET.
2. BEGINNING WITH HORIZONTAL BEADS, LOCATE BEAD IN CLIP CHANNEL OF SASH AS SHOWN. INTEGRATED GASKET MAY REST AGAINST GLASS UNIT.
3. APPLY FIRM PRESSURE TO THE BEAD TO HOLD IN POSITION. THIS MAY CAUSE THE BEAD TO FULLY LOCK INTO POSITION.
4. USING A NYLON MALLET, TAP BEAD INTO CHANNEL WORKING FROM ONE END TO THE OTHER. PLEASE TAKE CARE AT THIS STAGE TO AVOID DAMAGE TO BOTH THE GLAZING UNIT AND THE BEAD.
5. REPEAT STEPS 2 - 4 TO INSTALL VERTICAL BEADS.

WE STRONGLY RECOMMEND INSTALLING ACET496 GLASS ADJUSTERS WHEN USING QUICK-GLAZE BEADS. THIS WILL REMOVE THE NEED TO REMOVE BEADS IN ORDER TO ADJUST GLASS POSITION.

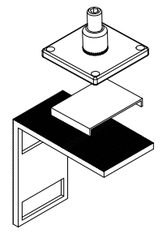

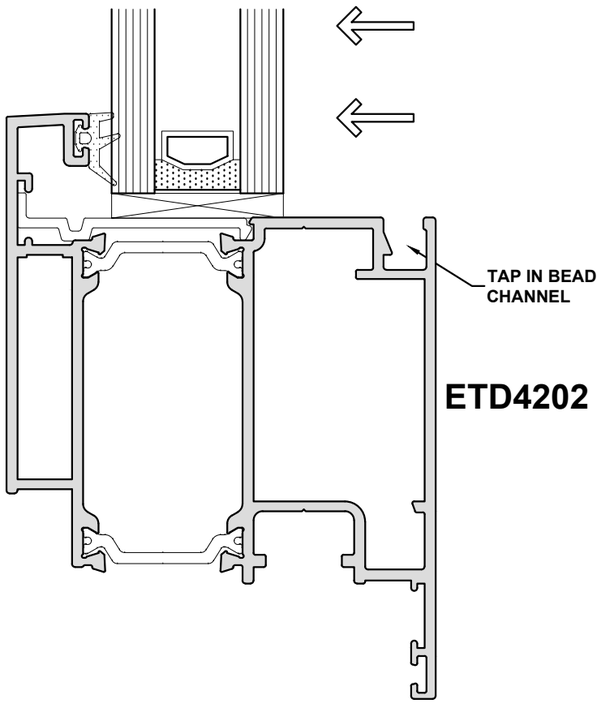

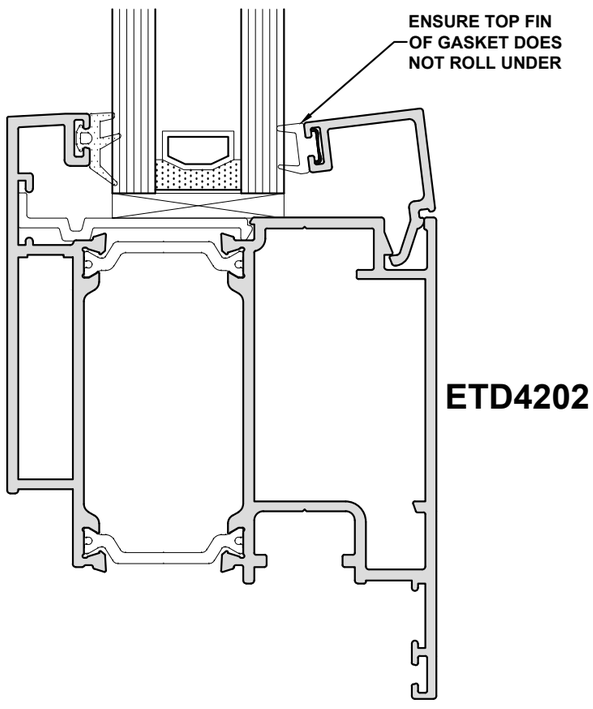

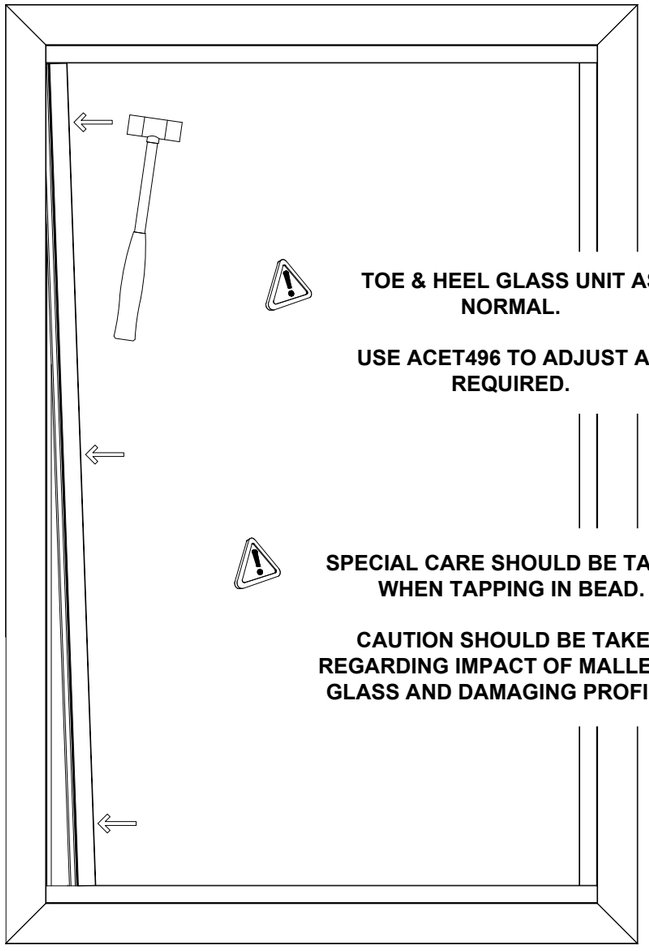

TOE & HEEL GLASS UNIT AS NORMAL.

USE ACET496 TO ADJUST AS REQUIRED.

SPECIAL CARE SHOULD BE TAKEN WHEN TAPPING IN BEAD.

CAUTION SHOULD BE TAKEN REGARDING IMPACT OF MALLET ON GLASS AND DAMAGING PROFILES.

KEEP INTEGRATED GASKET

QUICK-GLAZE BEAD REMOVAL

1. STARTING ON VERTICAL BEADS, APPLY PRESSURE TO BEAD IN DIRECTION SHOWN IN ORDER TO CREATE SMALL GAP BETWEEN SASH AND BEAD.
2. GENTLY INSERT DE-GLAZING TOOL TAKING PARTICULAR CARE AS NOT TO DAMAGE PAINT FINISH.
3. SLOWLY PRISE THE BEAD UP AND AWAY FROM THE SASH.
4. THE BEAD SHOULD NOW BE EASILY REMOVABLE FROM QUICK-GLAZE BEAD CHANNEL IN SASH

BEAD AND INTEGRATED GASKET CAN BE REUSED.

OR

REPLACE INTEGRATED GASKET

QUICK-GLAZE BEAD REMOVAL

1. USING SMALL FLAT HEADED SCREWDRIVER OR SIMILAR, WEDGE TIP BETWEEN CO EXTRUDED GASKET AND ALUMINIUM.
2. IN A LEVERING MOTION, PRISE THE GASKET AWAY FROM THE ALUMINIUM. PARTICULAR CARE SHOULD BE TAKEN NOT TO DAMAGE THE GLASS UNIT AND ALUMINIUM.
3. COMPLETE THIS AT SEVERAL LOCATIONS ALONG THE LENGTH OF THE BEAD.
4. REMOVE GASKET AND DISCARD. THIS GASKET CAN NO LONGER BE USED.
5. THE BEAD SHOULD NOW BE EASILY REMOVABLE FROM TAP IN BEAD CHANNEL IN SASH

PLEASE SEE GLAZING CHART FOR REPLACEMENT GASKET CODES.

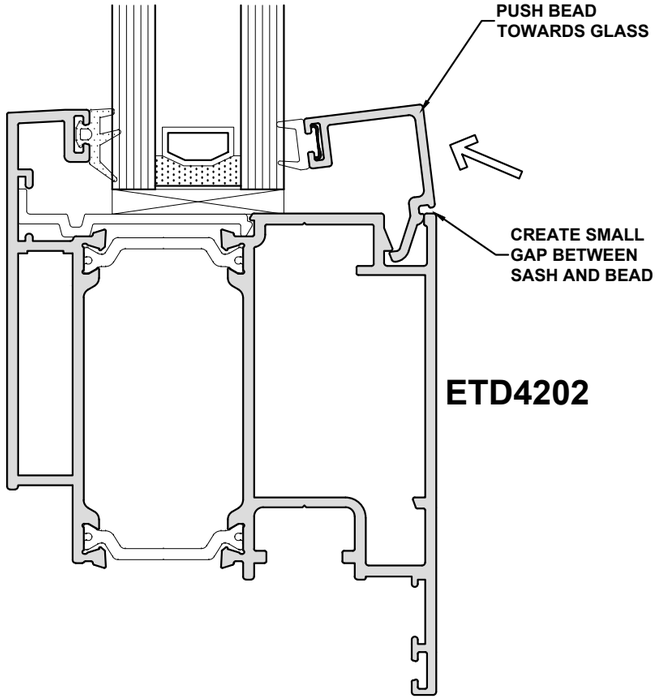

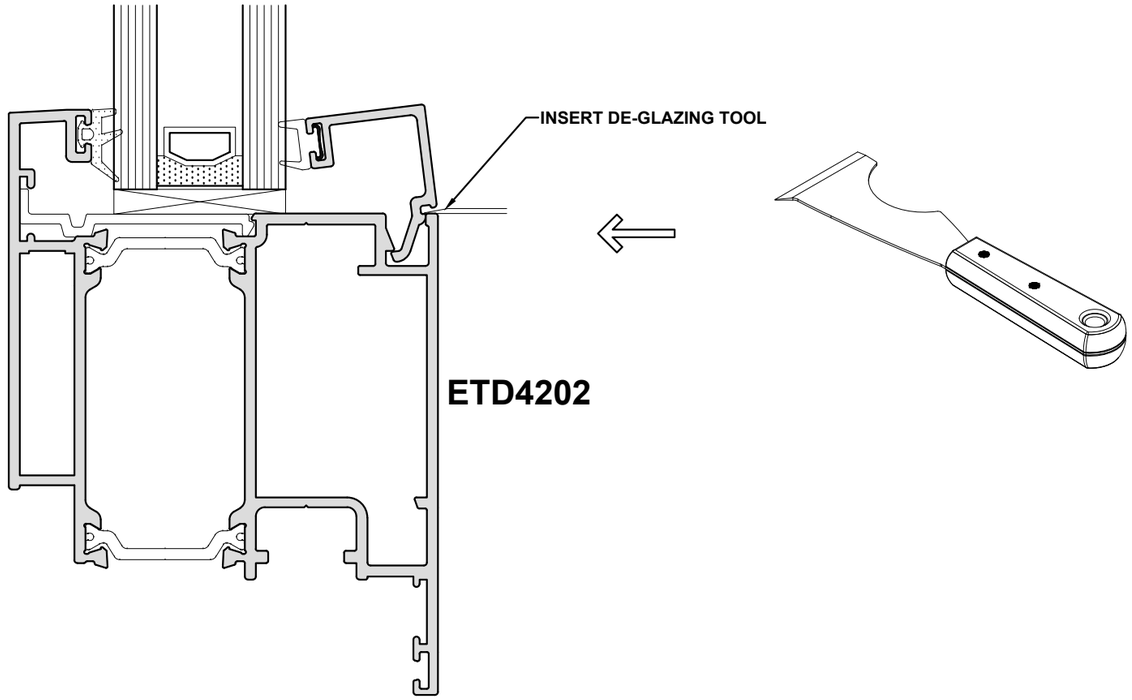

Do Not Scale From This Drawing

ACET496 Glass Adjuster

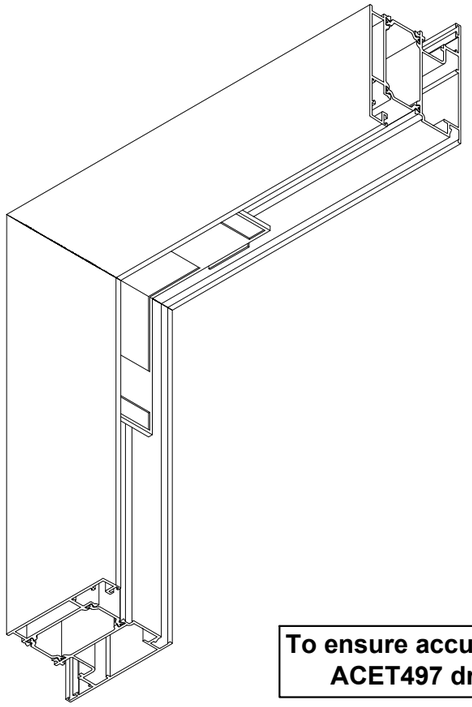

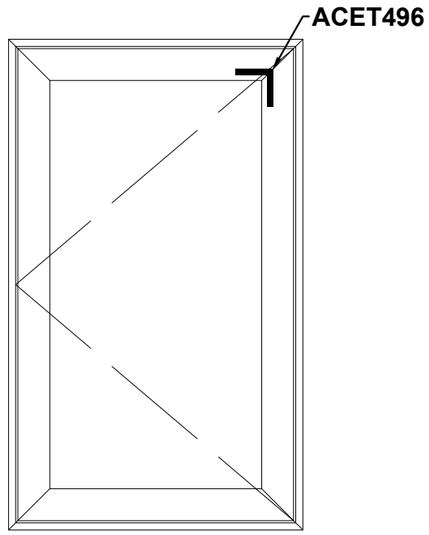

To ensure accuracy use ACET497 drill jig

Note: Do not tighten the adjusting screw too tightly as it can lead to cracked glass.

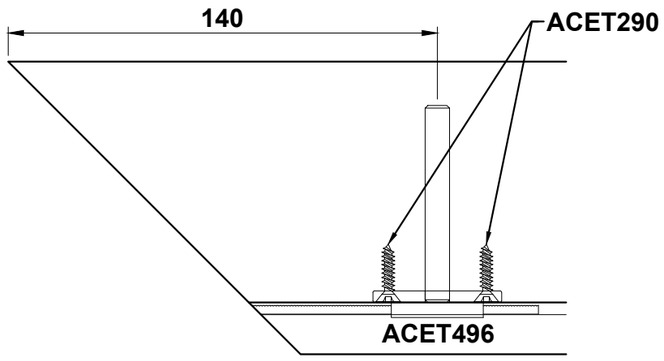

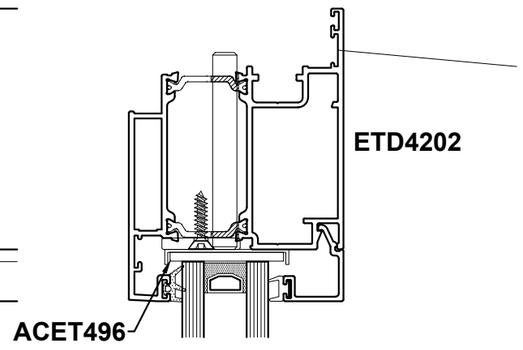

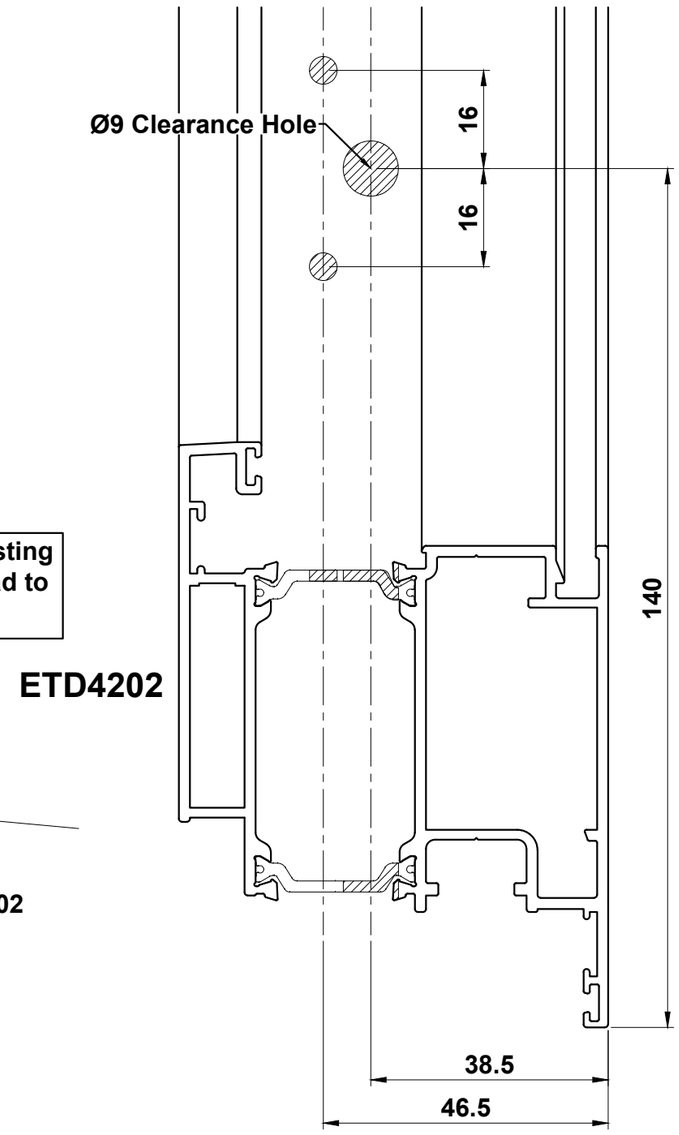

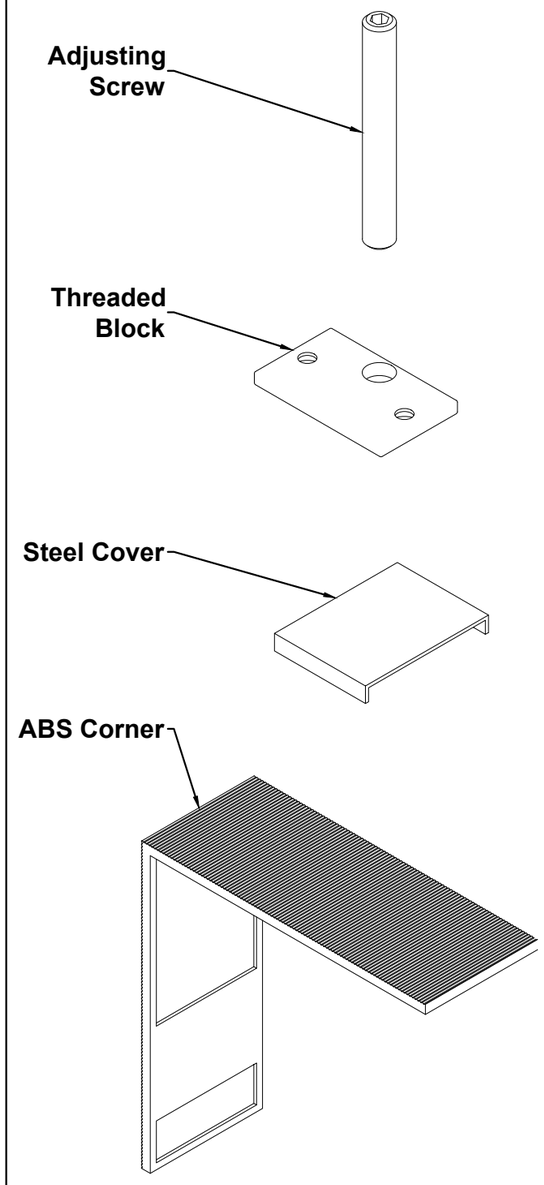

Do Not Scale From This Drawing

Fixing Strap Detail

Note:
Fixing straps should be spaced a minimum of 150mm in from each end & at a maximum of 300mm apart.

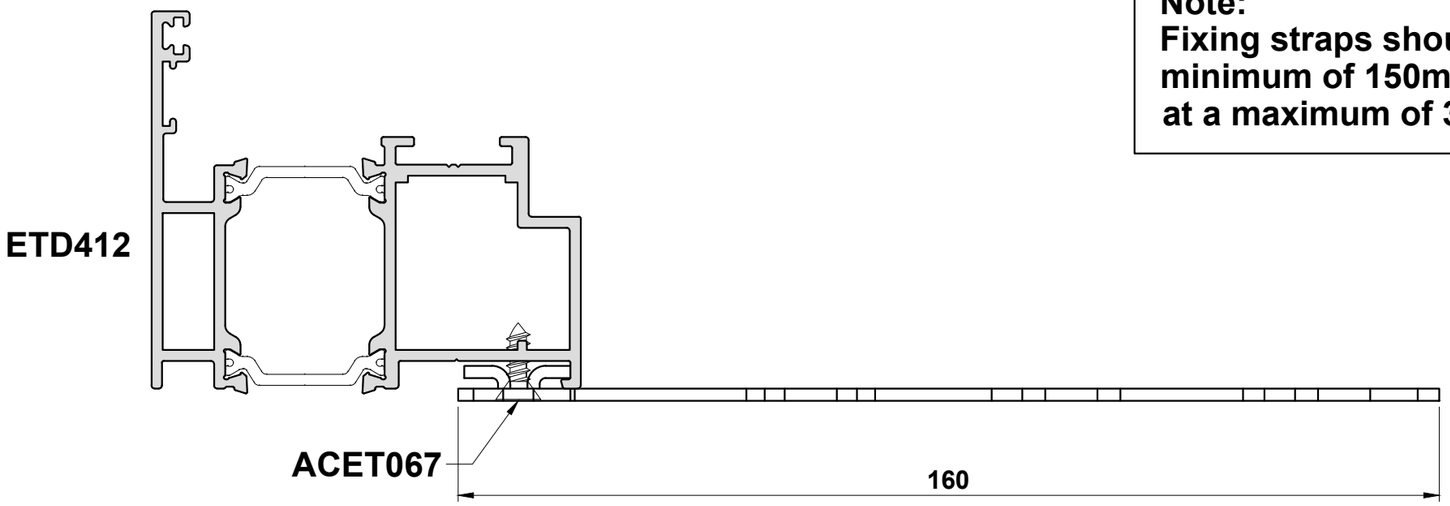

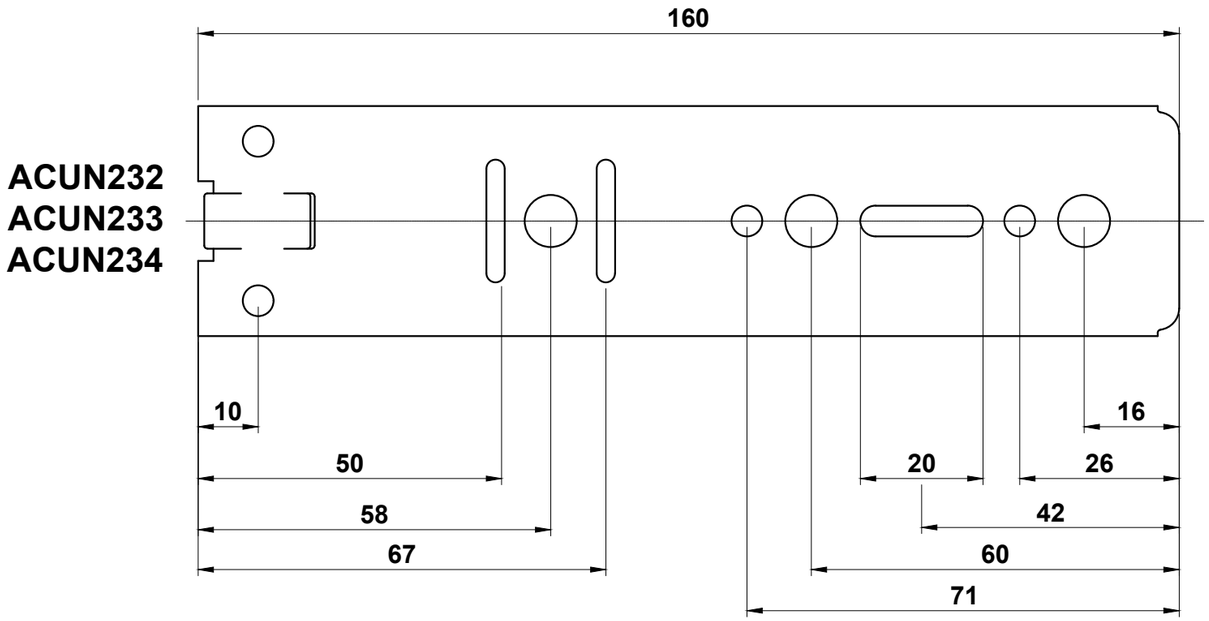

Do Not Scale From This Drawing

Flush Example Layout

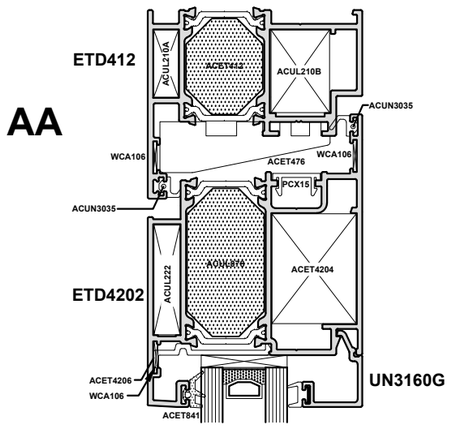

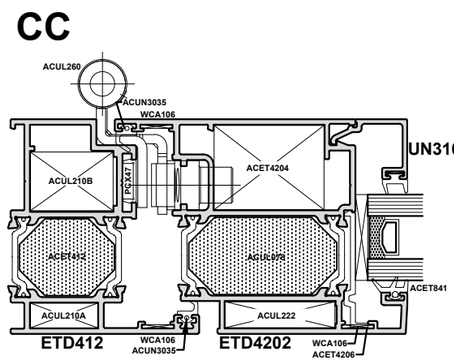

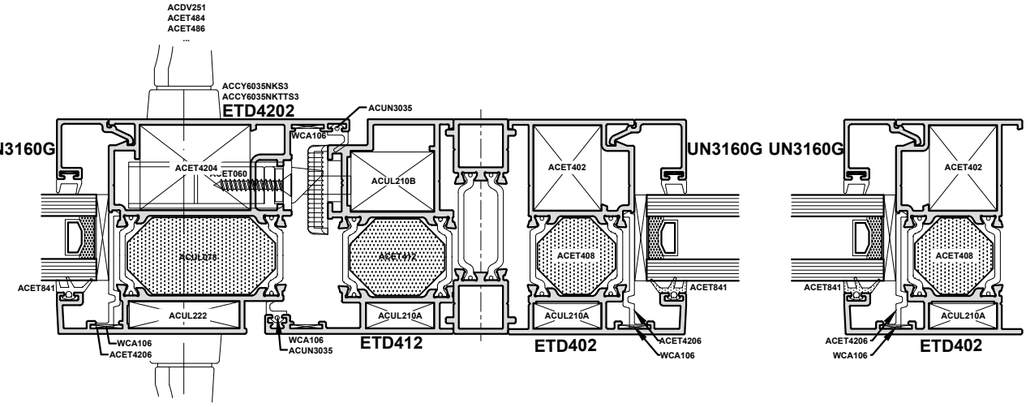

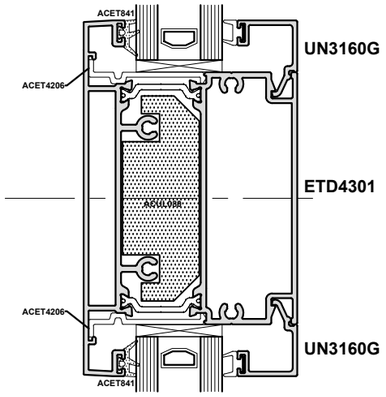

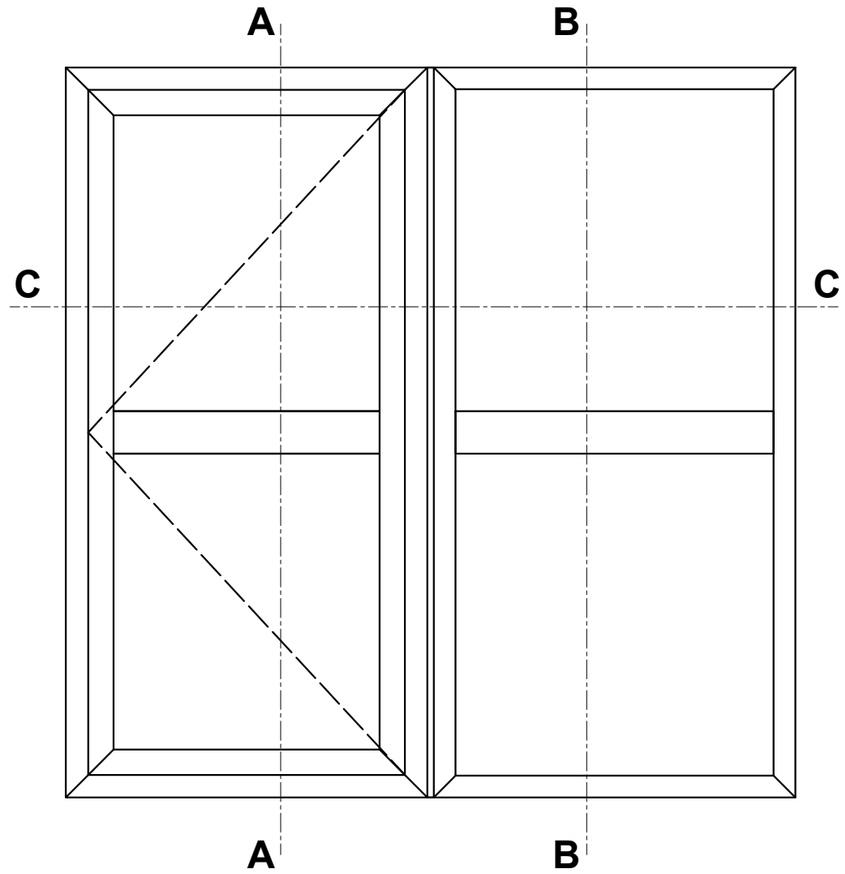

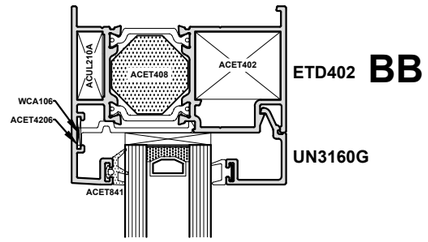

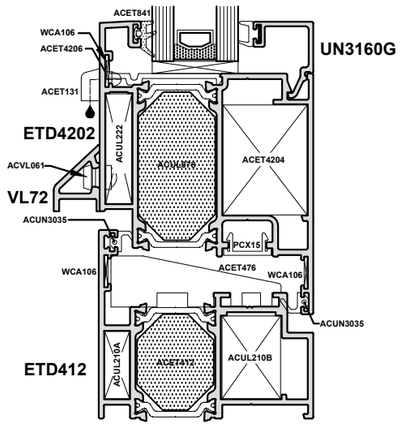

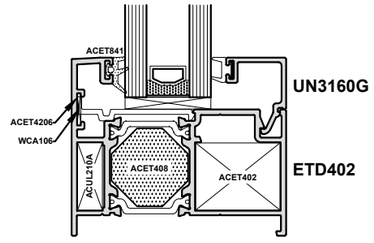

Do Not Scale From This Drawing

ACET149 Fitting Instructions

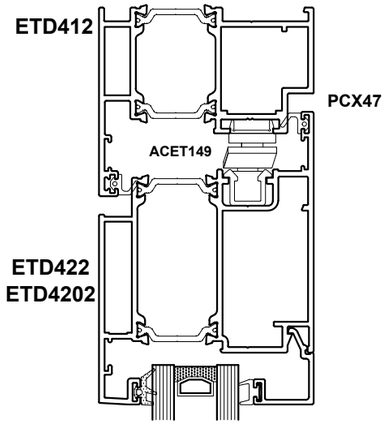

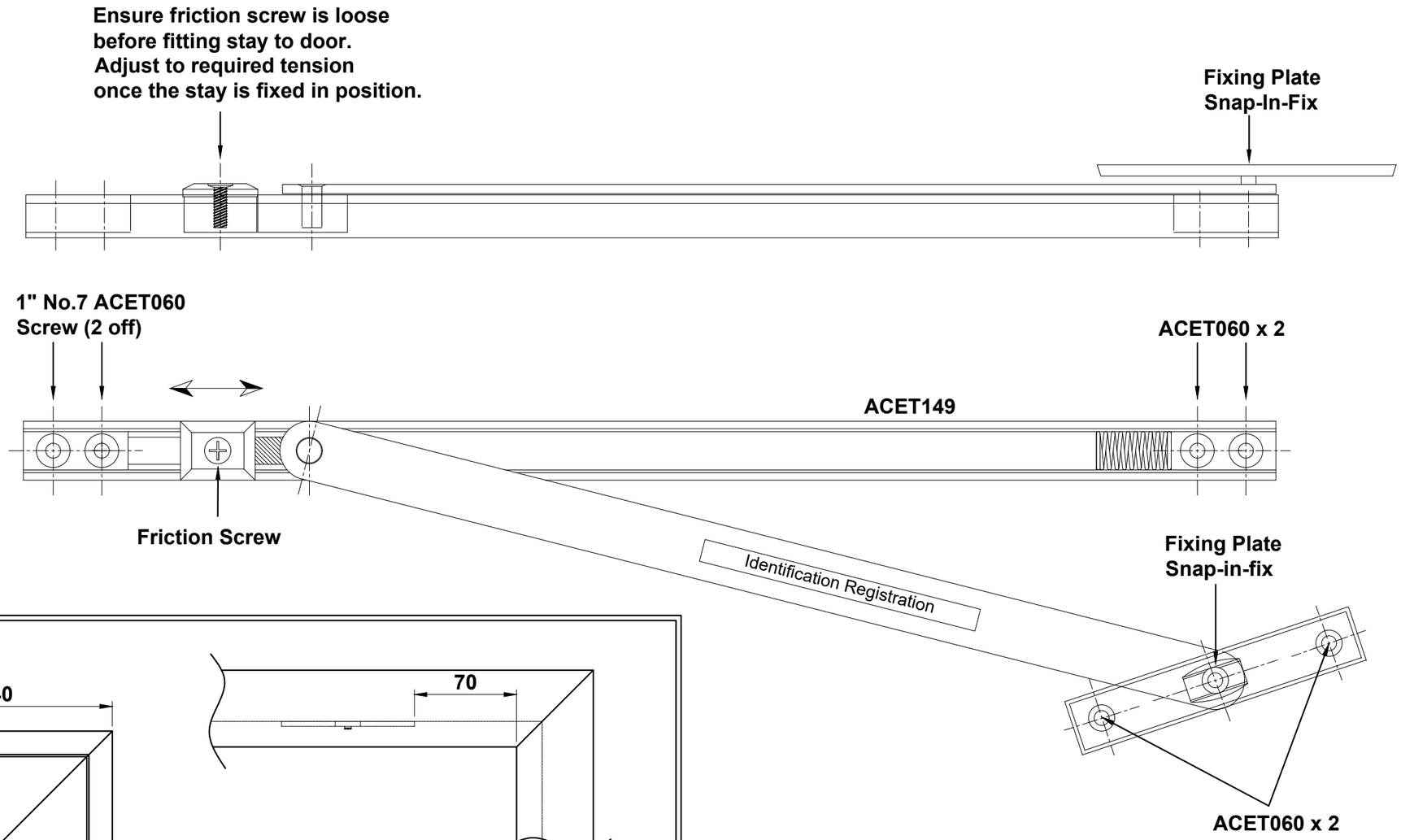

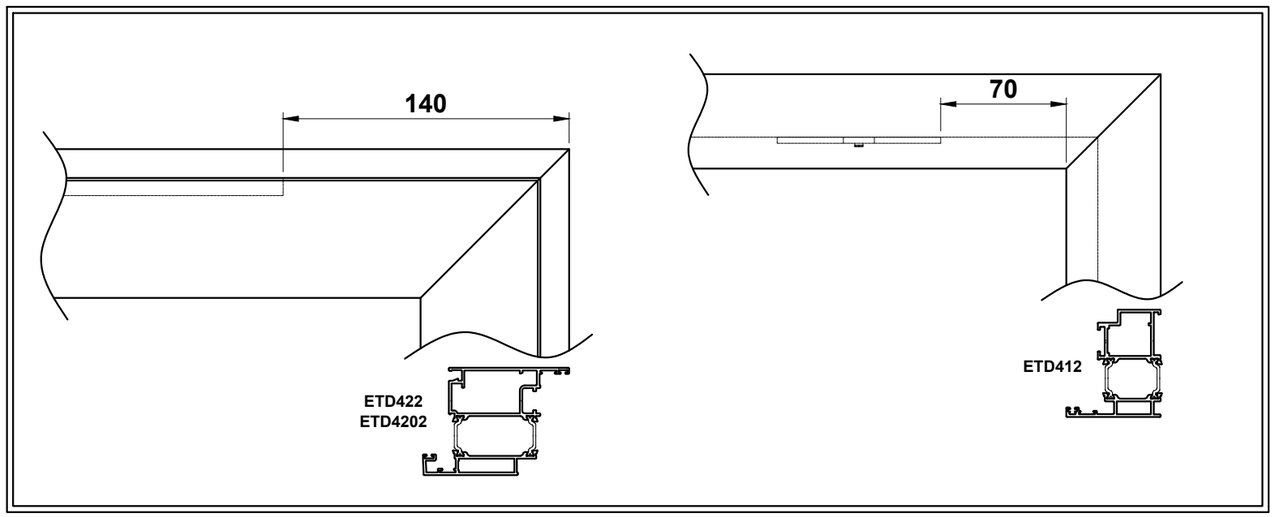

Do Not Scale From This Drawing

Trickle Vent

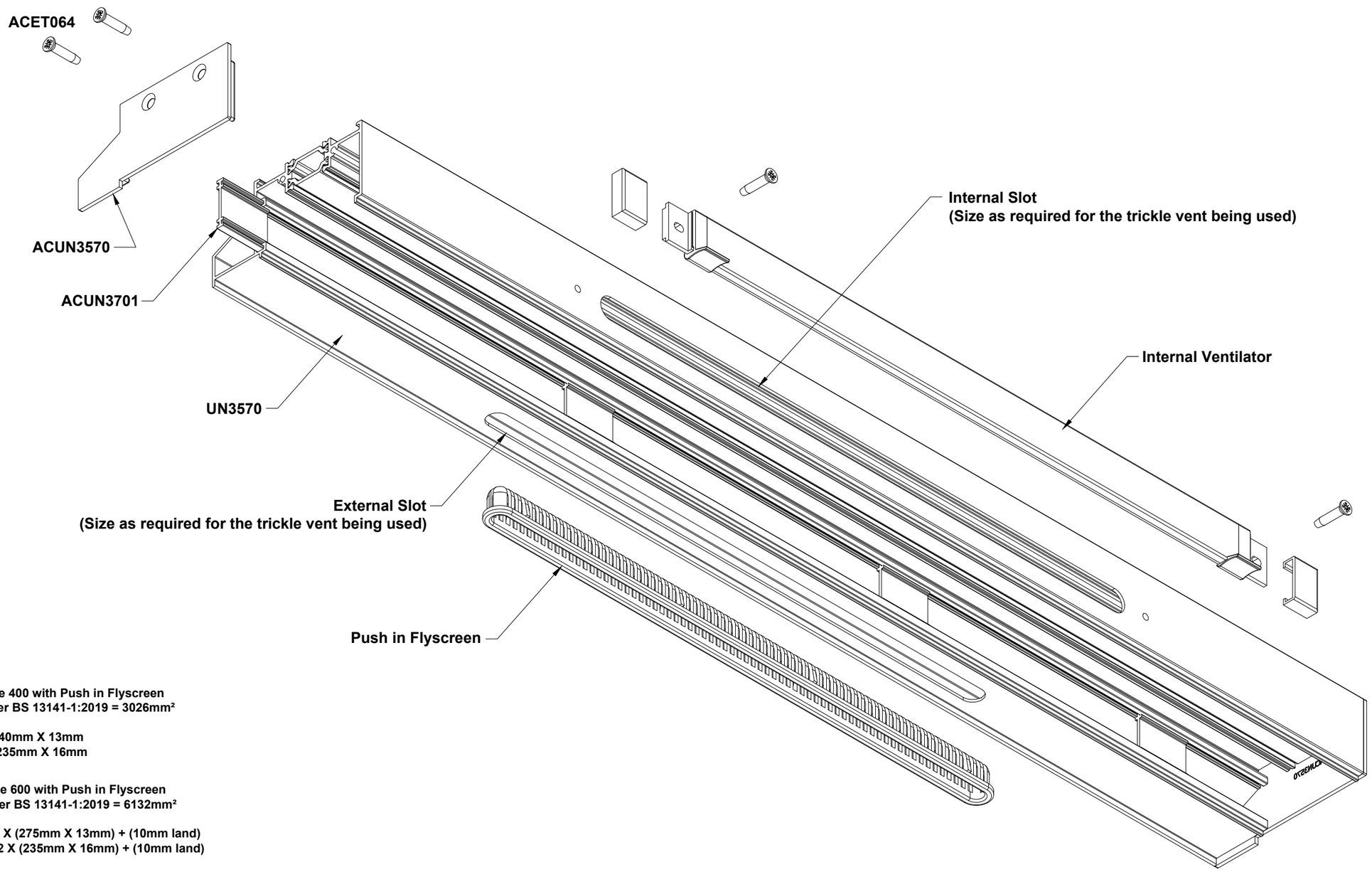

R. W. Simon Sightline 400 with Push in Flyscreen
Equivalent area as per BS 13141-1:2019 = 3026mm²
Length = 400mm
Internal Slot Size = 340mm X 13mm
External Slot Size = 235mm X 16mm

R. W. Simon Sightline 600 with Push in Flyscreen
Equivalent area as per BS 13141-1:2019 = 6132mm²
Length = 600mm
Internal Slot Size = 2 X (275mm X 13mm) + (10mm land)
External Slot Size = 2 X (235mm X 16mm) + (10mm land)

Do Not Scale From This Drawing

Section E

E ETD

Construction Drawings - Open Out

Corner Joint Details

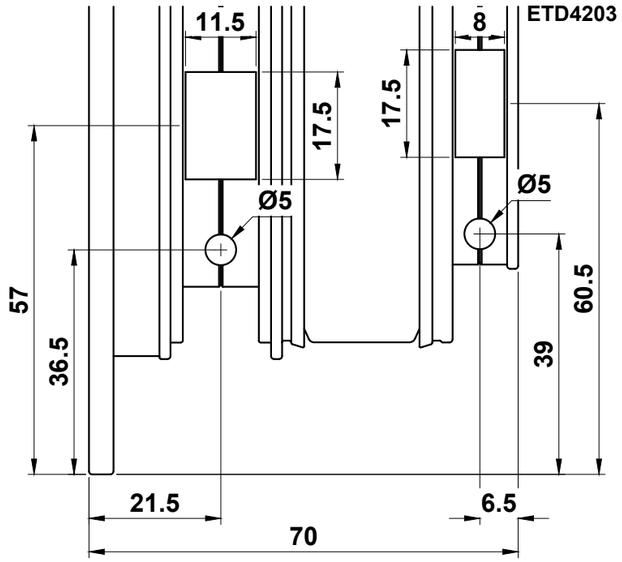

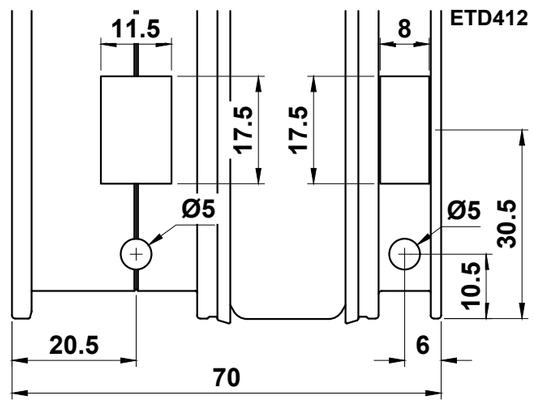

Notes

1. Degrease mitre sections
2. Cover mitred faces with ACSIL04
3. Apply ACSIL013 to cleat chambers
4. Apply ACSIL04 to any fractures formed by mechanical joint to make watertight

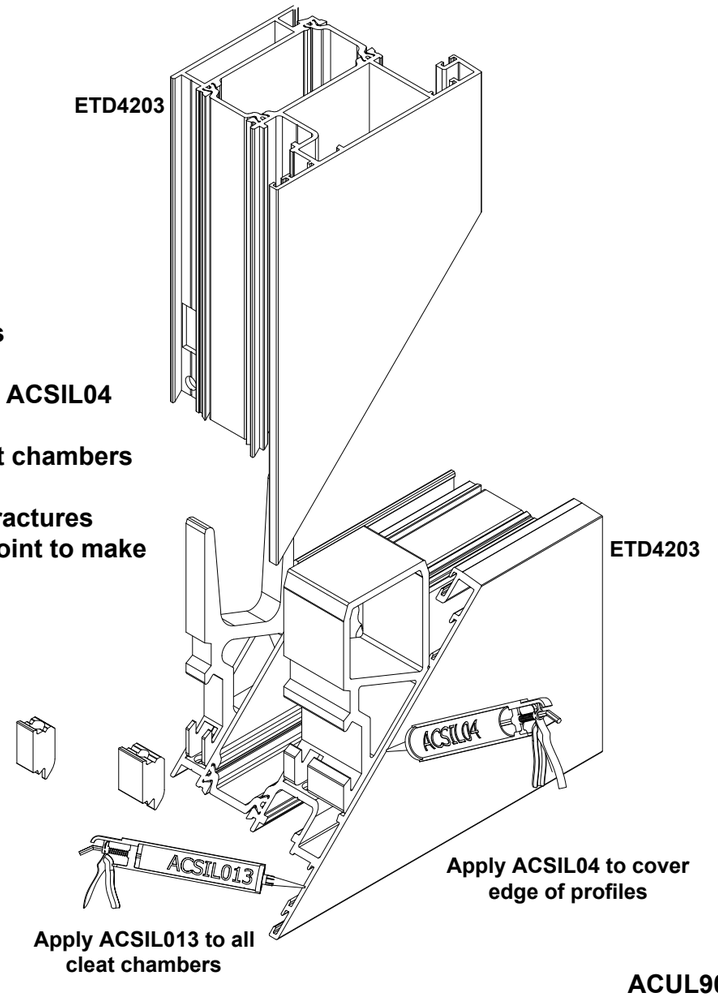

ACUL900

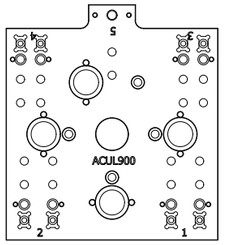

To ensure accurate corners, we recommend the use of support blocks (by others) whilst cutting.

Do Not Scale From This Drawing

ACUL900 Punch Tool

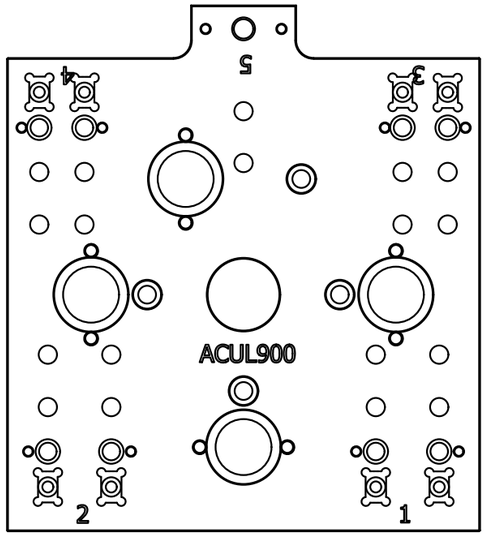

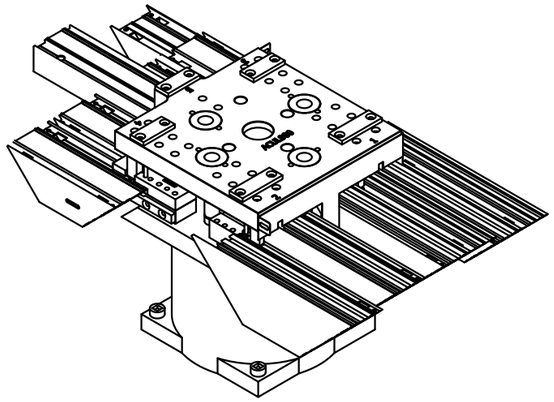

Station 3 & 4

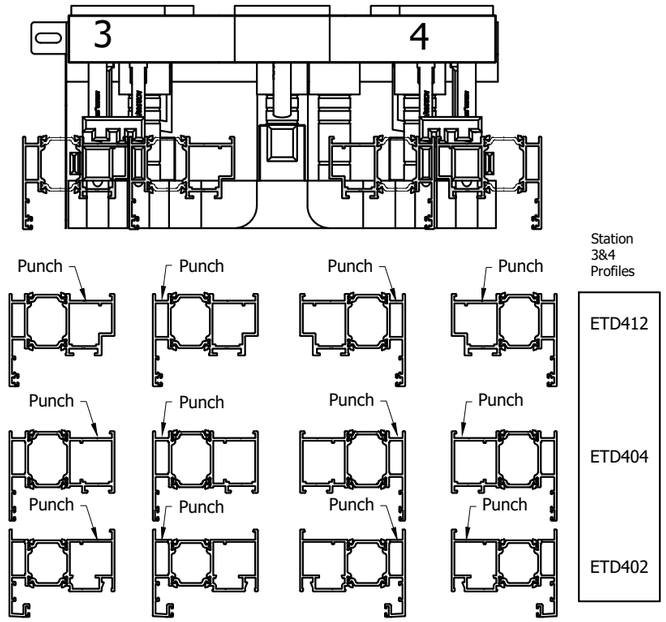

Station 1 & 2

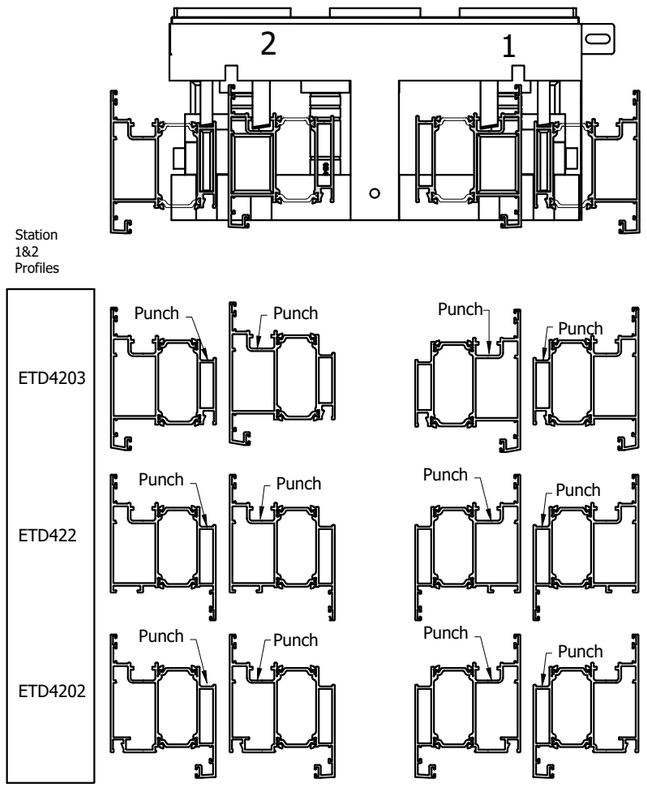

Station 5

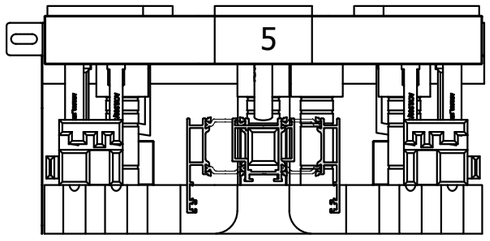

Station 5 Profiles

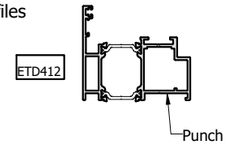

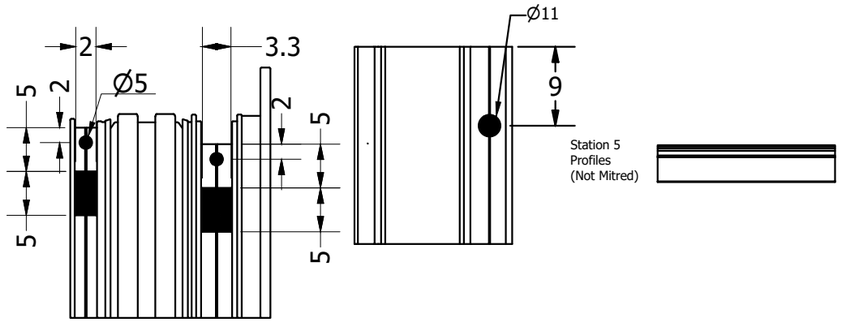

IMPORTANT NOTE:
Please do not overtighten retaining nut to punch tool base.

Use support stands for longer lengths of profiles.

Do Not Scale From This Drawing

Flush Low Rebate Threshold Assembly

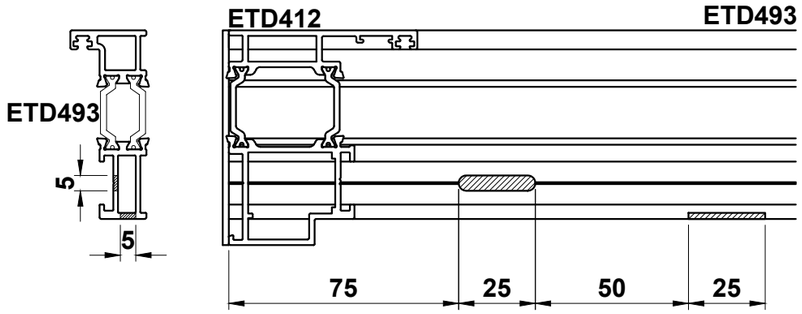

Important Note: All exposed aluminium should be coated using ACSIL014 or painted to match the frame.

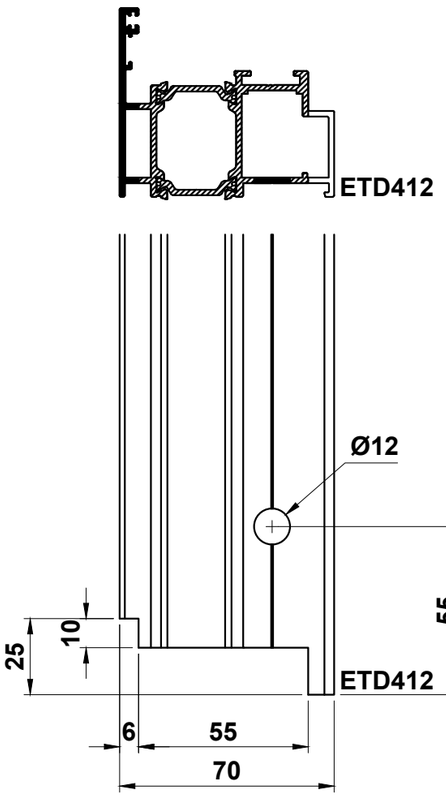

Important Note:
Ensure end cap is sealed against threshold to prevent water egress.

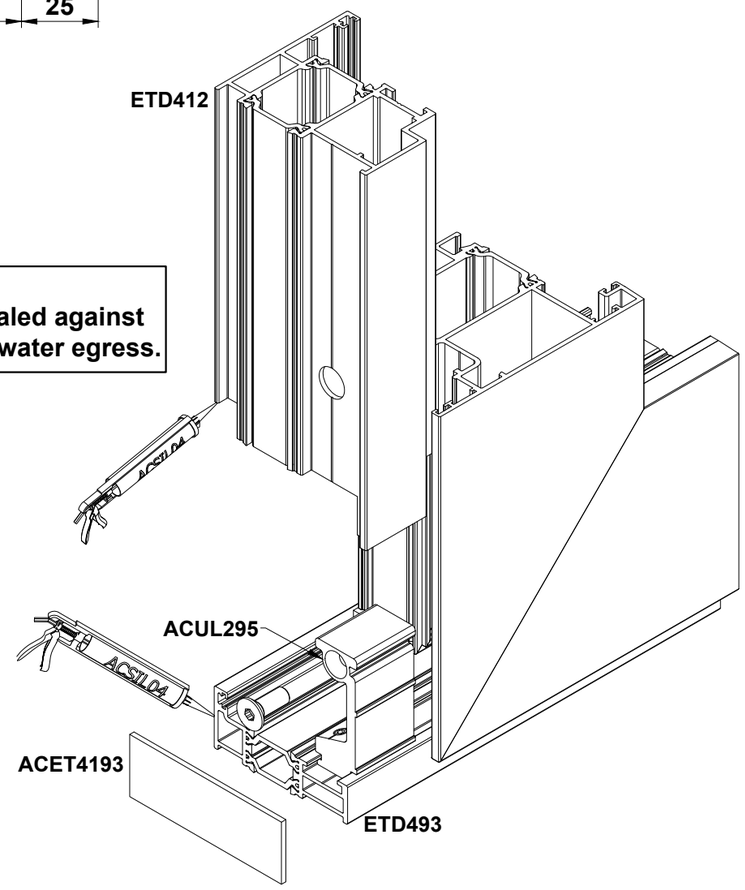

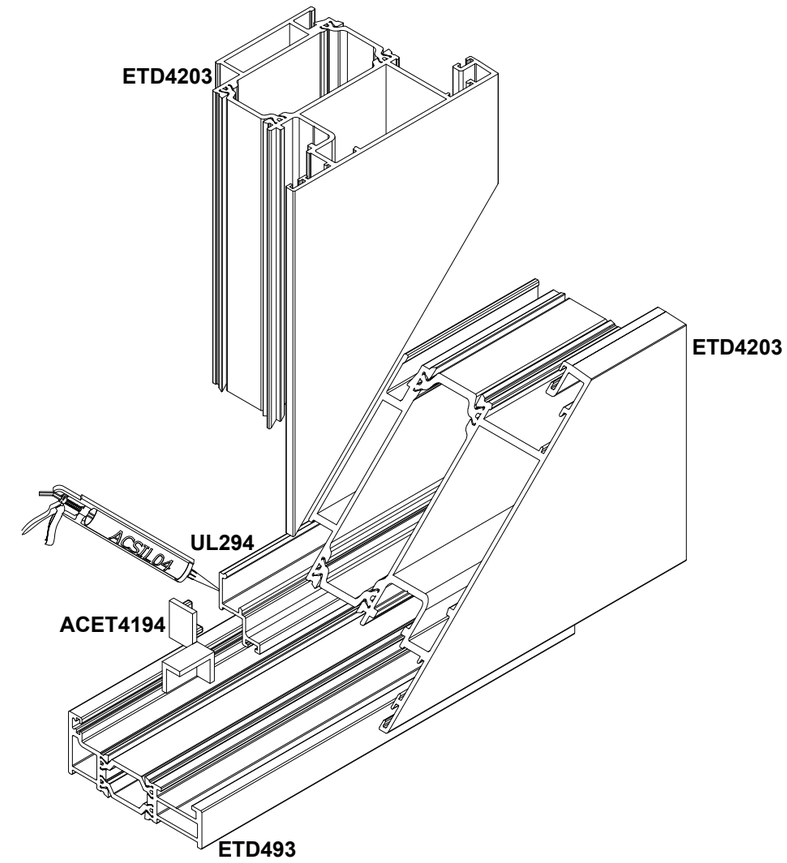

Note:
Do not drill down through drainage zone for installation.

Do Not Scale From This Drawing

Flush Low Ramp Threshold Assembly

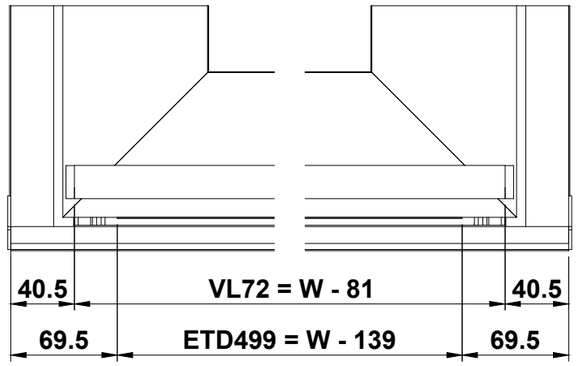

Important Note: All exposed aluminium should be coated using ACSIL014 or painted to match the frame.

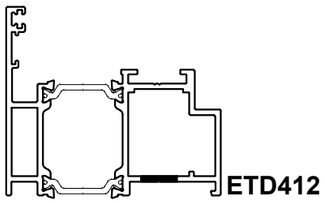

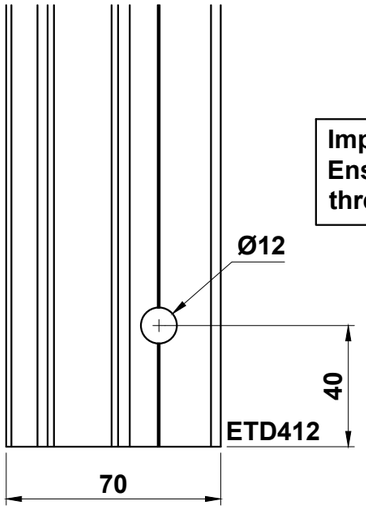

Important Note:
Ensure end cap is sealed against threshold to prevent water egress.

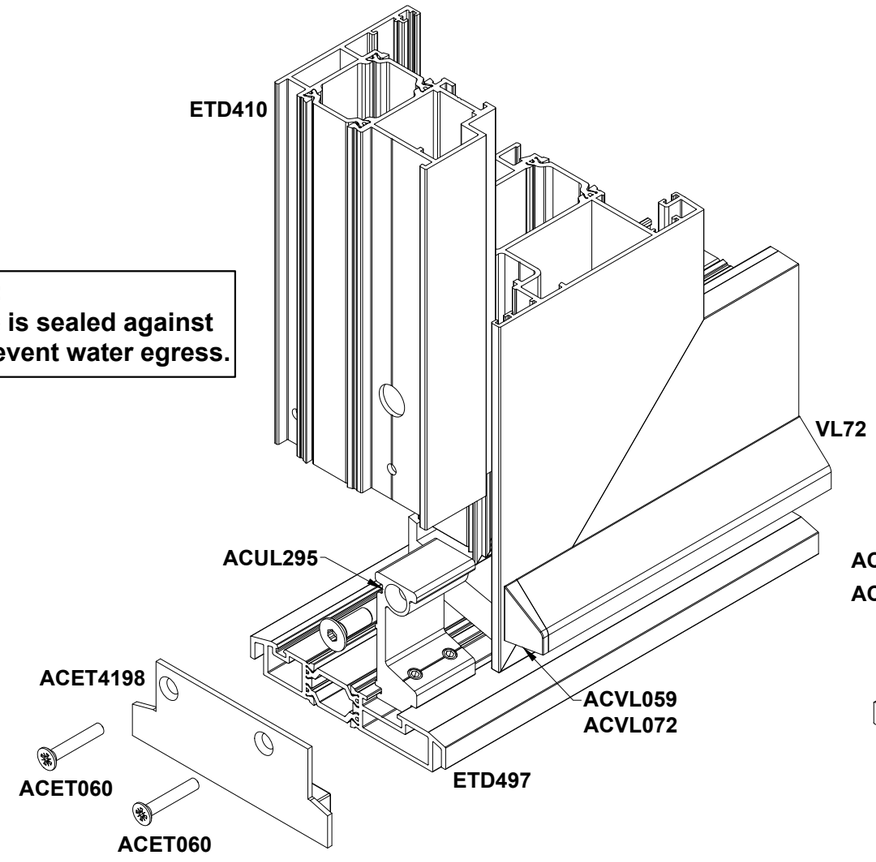

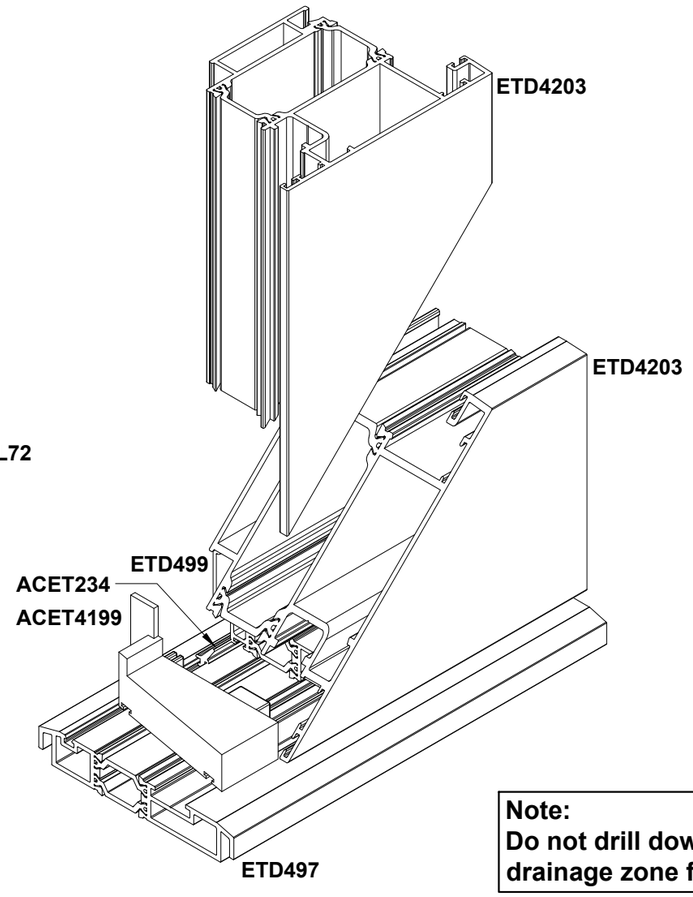

Note:
Do not drill down through drainage zone for installation.

Do Not Scale From This Drawing

Flush Drainage

Important Note: All exposed aluminium should be coated using ACSIL014 or painted to match the frame.

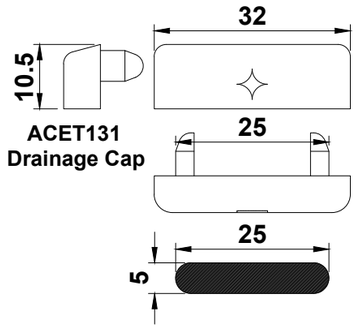

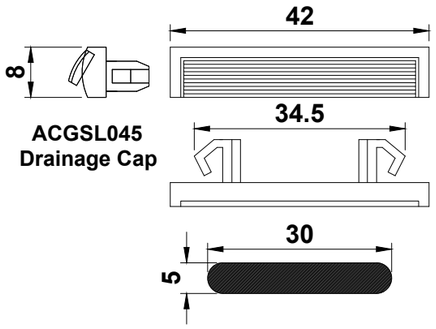

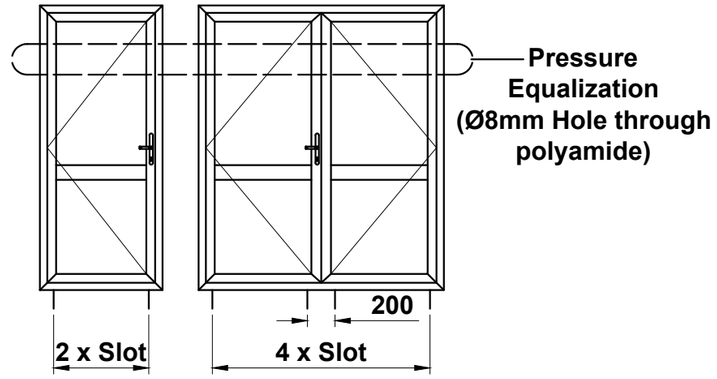

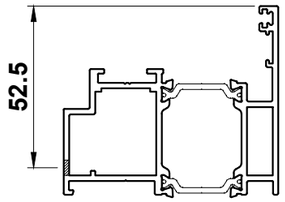

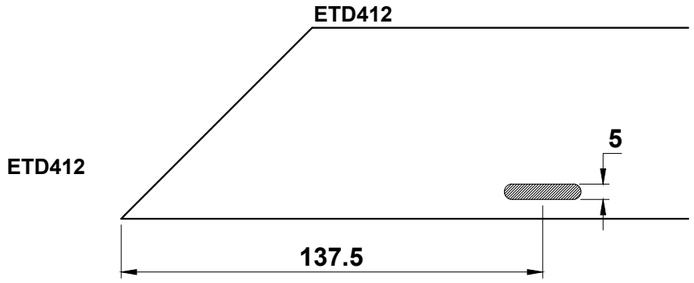

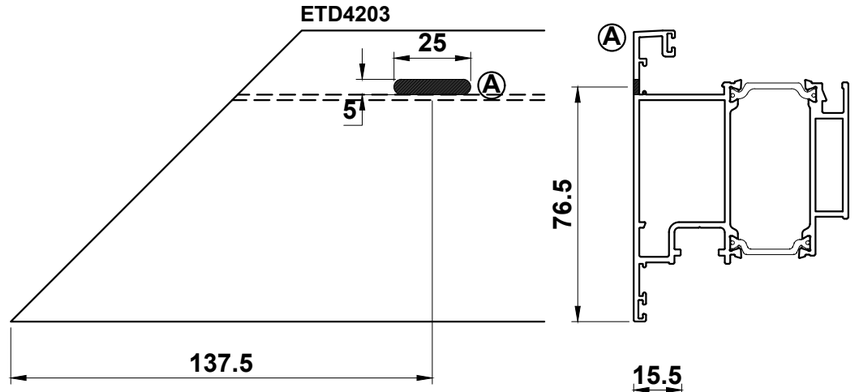

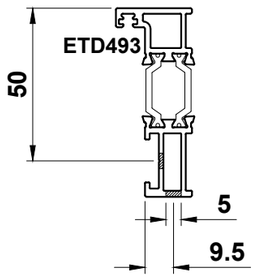

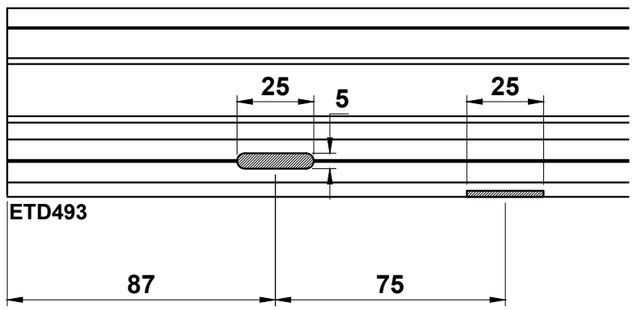

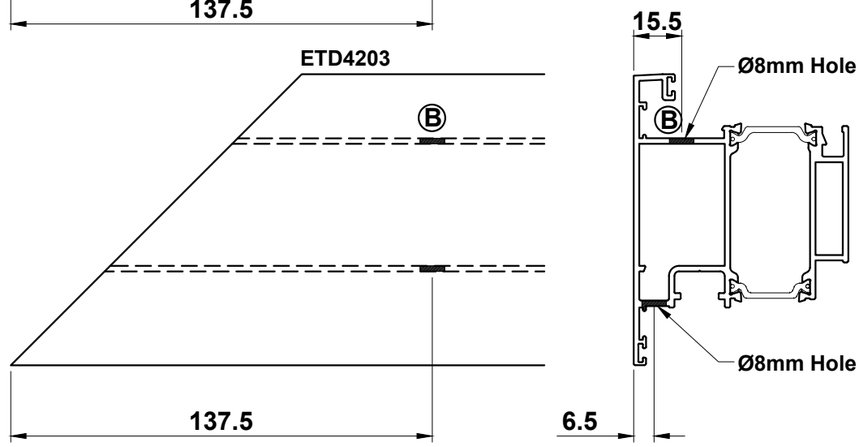

Do Not Scale From This Drawing

Sub Cill Drainage

Important Note: All exposed aluminium should be coated using ACSIL014 or painted to match the frame.

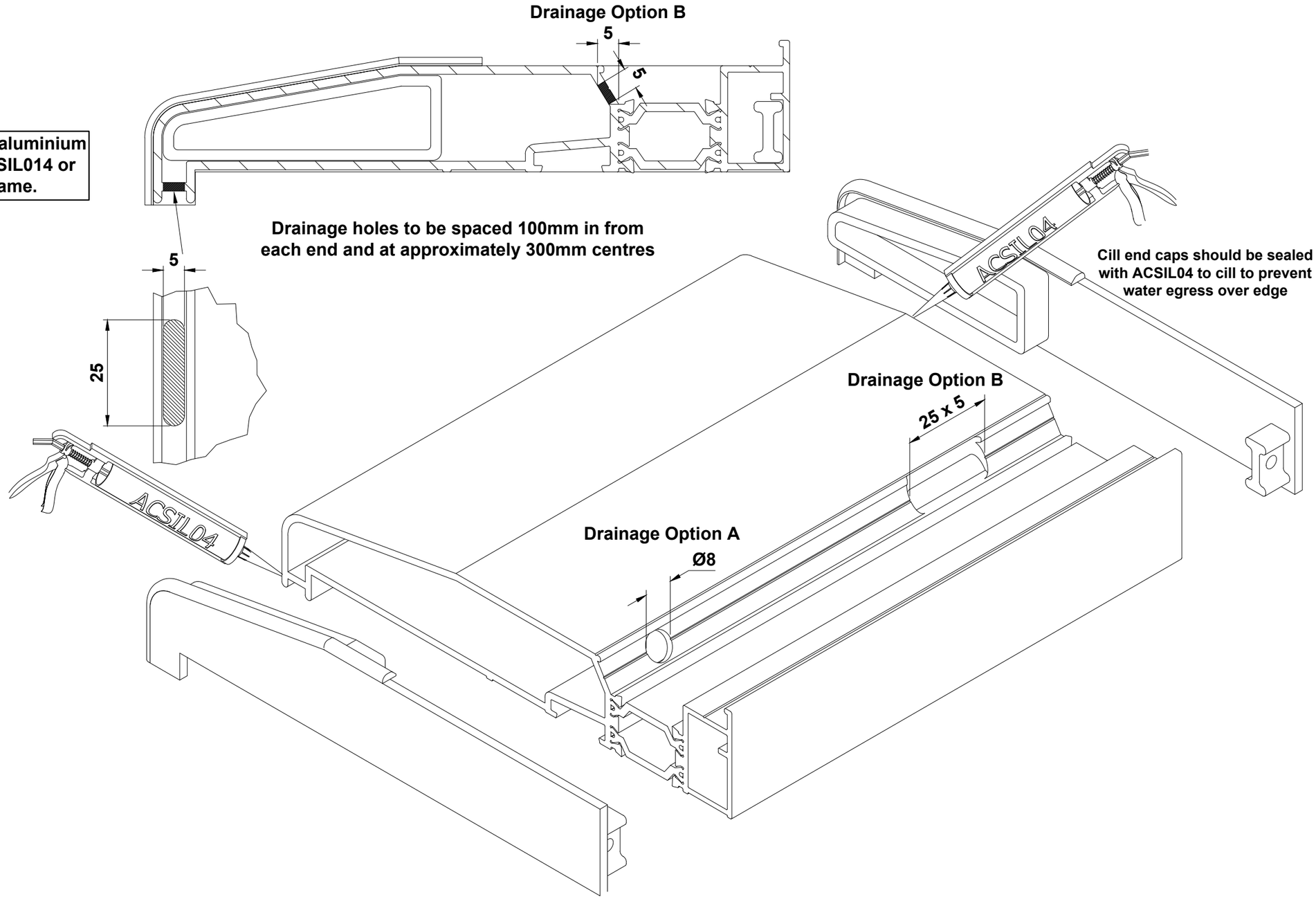

Do Not Scale From This Drawing

ETD4302 Midrail Assembly

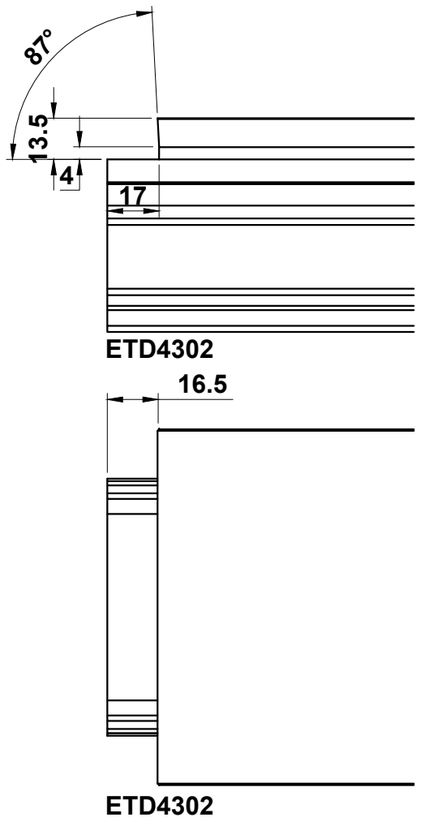

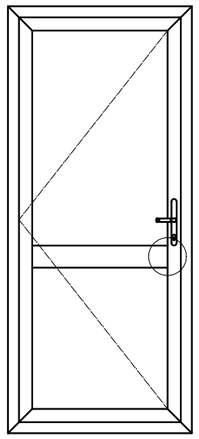

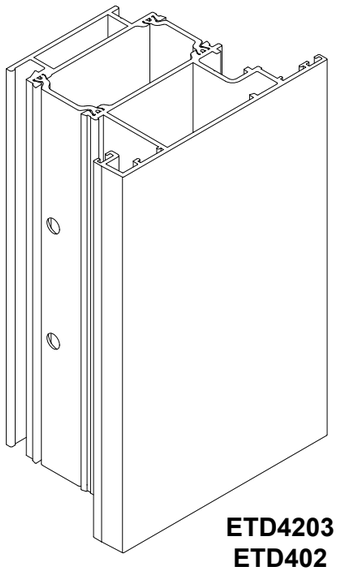

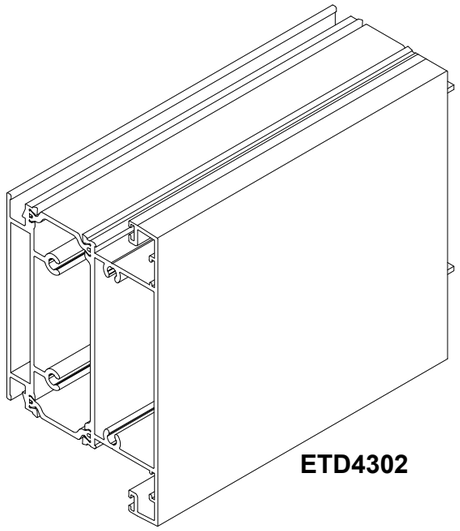

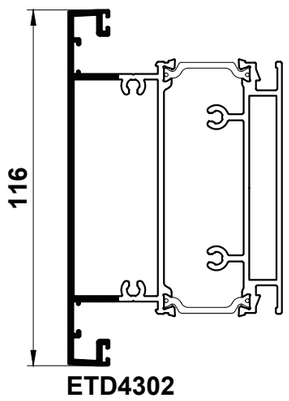

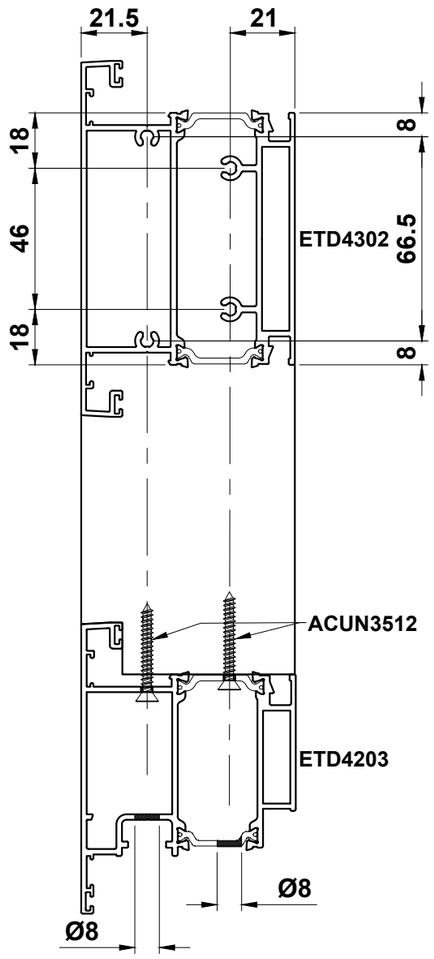

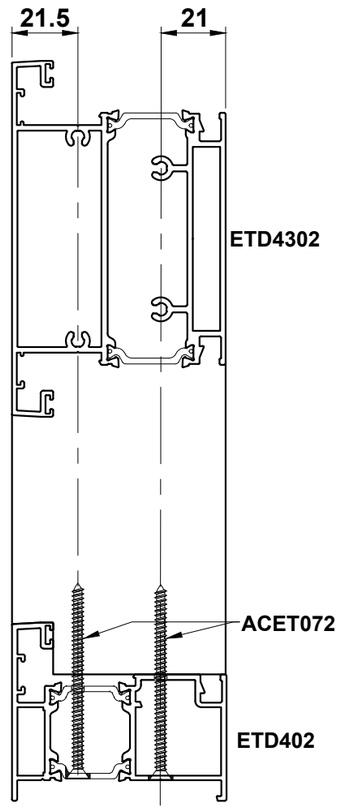

Do Not Scale From This Drawing

Stainless Steel Hardware - ACSM013, ACSM015, ACSM058 & ACSM059 Fitting Detail

Please Note:
ACSM059 is compatible with slam locks and key operated locks only.
Slam locks must not have an external lever handle.

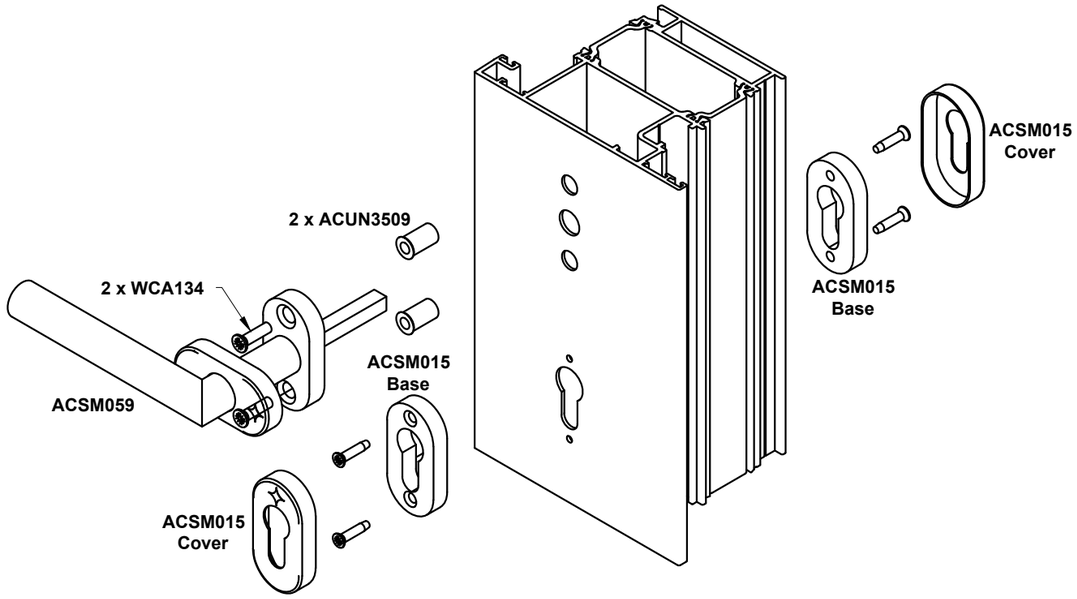

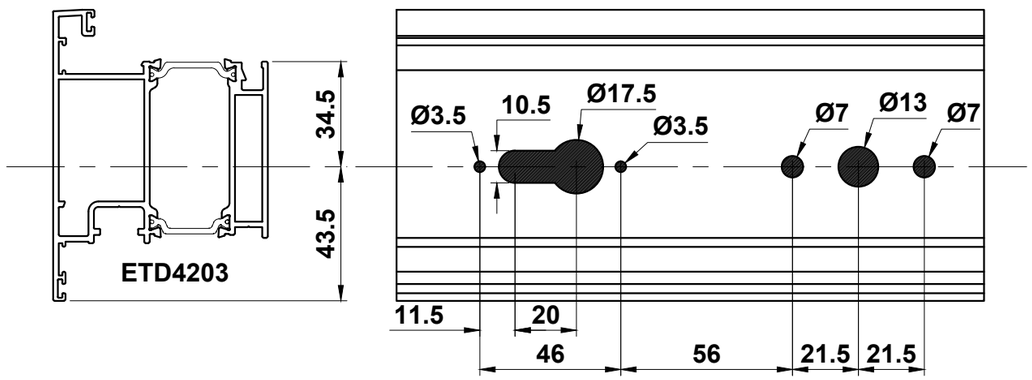

Please Note:
ACSM058 is compatible with all locks.
Slam locks must not have an external lever handle therefore require WCA134 & ACUN3509 for single side fixing and the spindle will need to be cut down.

Important Note: All exposed aluminium should be coated using ACSIL014 or painted to match the frame.

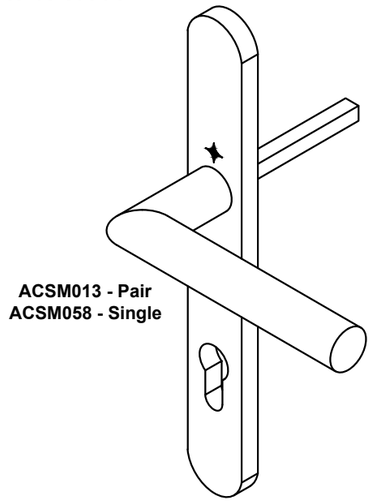

Please Note:
ACSM013SS pack contains;
2 x Universal Backplate & Lever
2 x Cover Plate
2 x Bolt Receiver Sleeve
2 x 40mm M5 Machine Screws
2 X 60mm M5 Machine Screws
1 x 3mm Allen Key
1 x 170mm Spindle

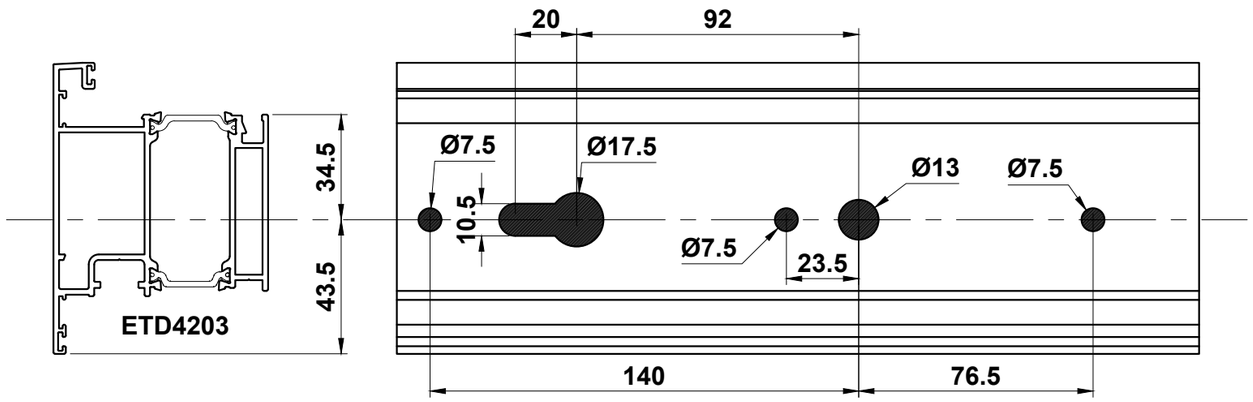

Do Not Scale From This Drawing

Door Locking & SZ Hardware Options

Slam Lock Guide (Internal Lever Handle Only)

Overall Sash Height	Spindle Height (X)	Kit Part Number Left Hand	Kit Part Number Right Hand
2030-2230 (Standard)	1050	ACUL280	ACUL281
1820-2029 (Short)	1050	ACUL360	ACUL361
2231-2450 (Tall)	1050	ACUL380	ACUL381

Note: Height limits apply to all threshold options.

Key Operated Lock Guide

Overall Sash Height	Spindle Height (X)	Kit Part Number Left Hand	Kit Part Number Right Hand
2030-2230 (Standard)	1050	ACUL282	ACUL283
1820-2029 (Short)	1050	ACUL362	ACUL363
2231-2450 (Tall)	1050	ACUL382	ACUL383

Handle With Large Backplate Guide

Ext. Handle	Int. Handle	Spindle	Cylinder	Screw	Screw	Rivnuts
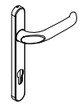	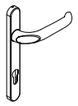	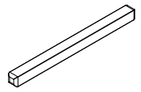	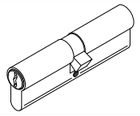	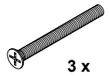 3 x	 3 x	 3 x
ACSZ800	ACSZ801	ACMX409Sq. Spindle 150mm	--	ACMX861 M5 x 75mm	--	--
	ACSZ803		ACCY0060 Half Cylinder			
	ACSZ830 T					
ACSZ802	ACSZ803		ACCY6035S3 35/60 Cylinder		--	--
	ACSZ830 T					
ACSZ400 + 2 x ACVS061	ACSZ803	ACMX008 Sq. Spindle 60mm	ACCY6035S3 35/60 Cylinder	ACVS061 M5 x 40mm	--	--
	ACSZ830 T					
--	ACSZ803	ACMX008 Sq. Spindle 60mm	*ACCY6035S3 35/60 Cylinder	--	WCA134 M5 x 20mm	ACUN3509 M5
	ACSZ830 T					

*Use with Ext. Ecutcheon

Keep Handing Guide

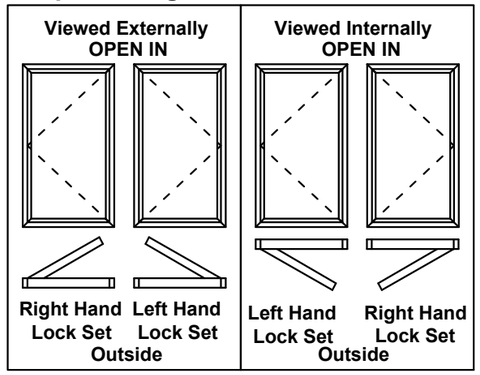

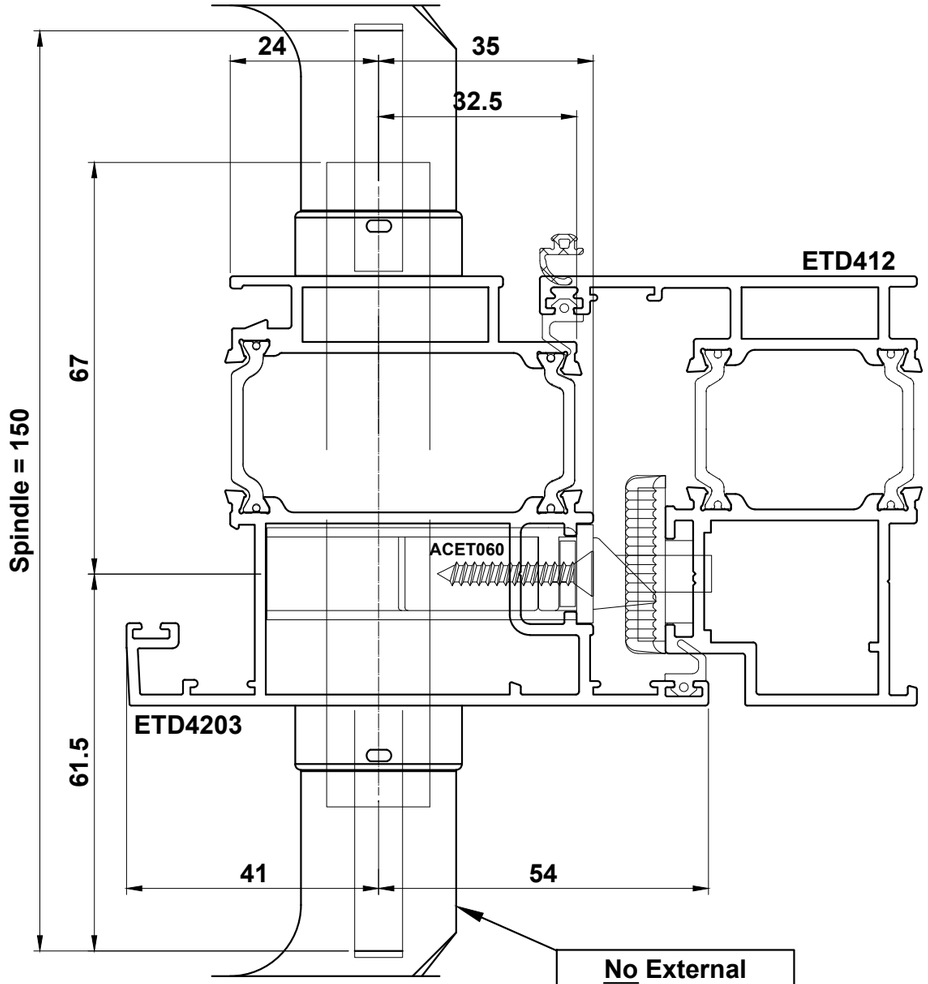

No External Lever Handle For Slam Locks

Handle with Small Backplate Guide

Ext. Handle	Ext. Escutcheon	Int. Handle	Int. Escutcheon	Spindle	Cylinder	Screw	Rivnuts
	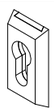		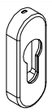	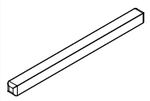	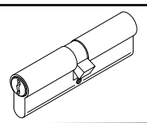		
ACSZ837	ACSZ400	ACSZ836	ACSZ839	ACMX409Sq. Spindle 150mm	ACCY6035S3	WCA134 M5 x 20mm	ACUN3509 M5
					ACCY0060		
	ACSZ400			ACMX008 Sq. Spindle 60mm	ACCY6035S3	WCA134 M5 x 20mm	ACUN3509 M5
					ACCY0060		
ACSZ837	ACSZ400	ACSZ827 T		ACMX409Sq. Spindle 150mm	ACCY6035S3	WCA134 M5 x 20mm	ACUN3509 M5
					ACCY0060		

With Cylinder
Without Cylinder
T Handle With Cylinder
T Handle Without Cylinder

Note:
Please check kitemark for all suitable hardware to achieve PAS24.

Do Not Scale From This Drawing

ACUL260 Hinge Preparation

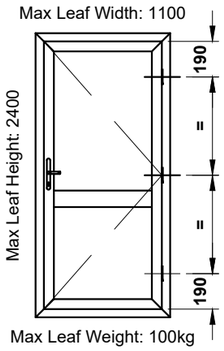

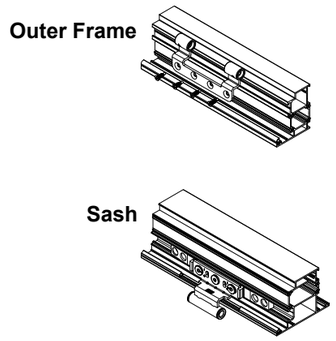

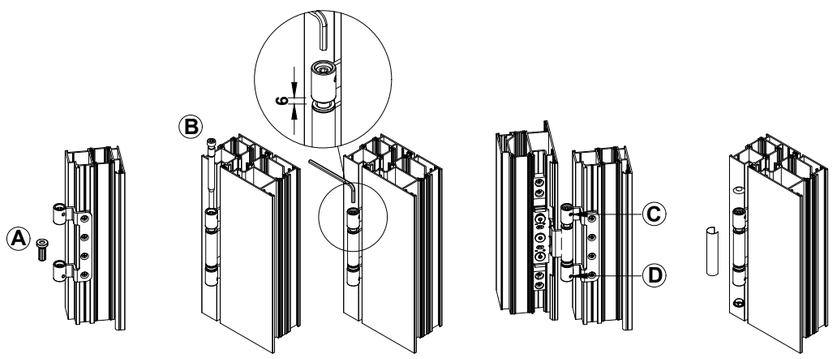

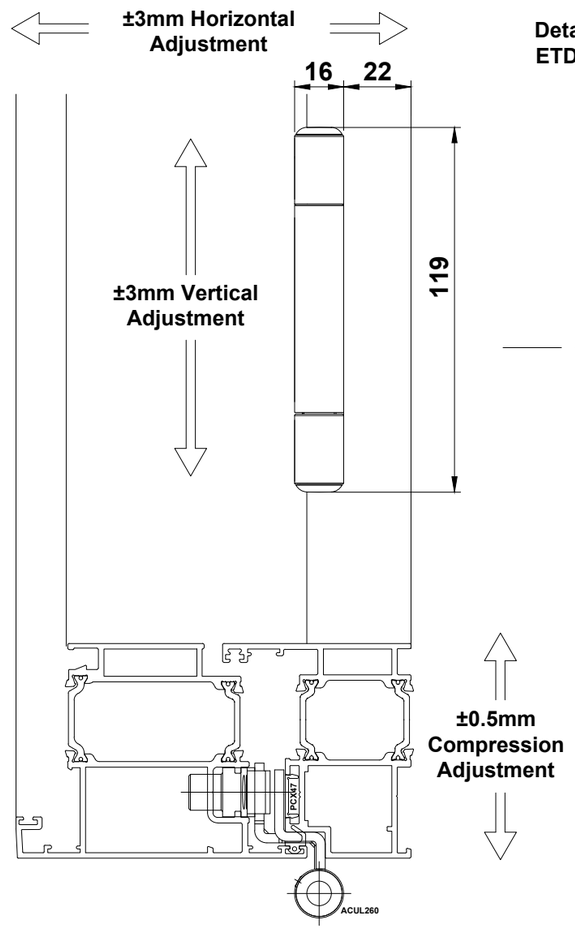

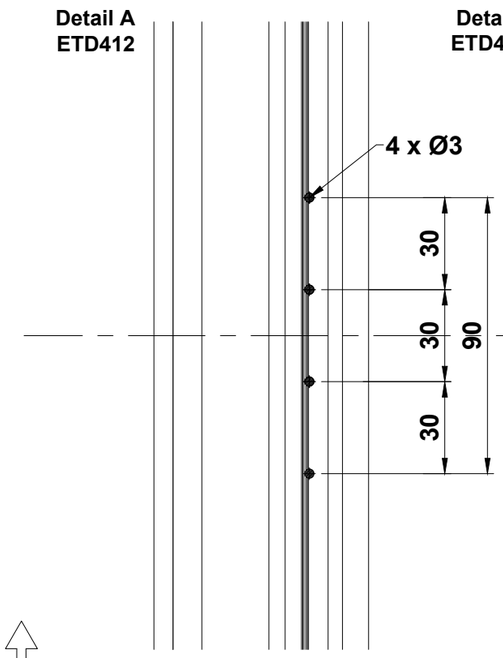

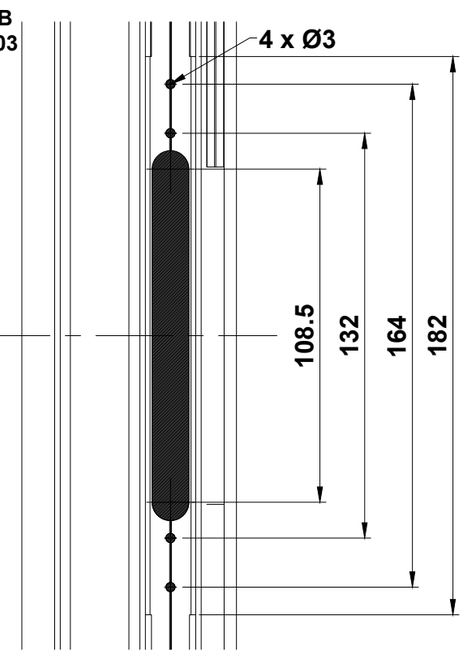

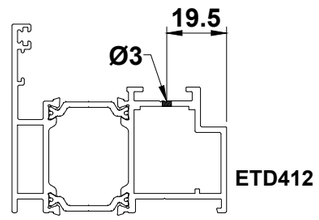

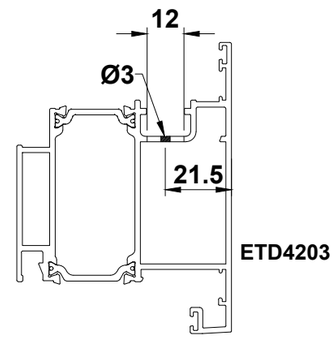

Fitting Instructions:

1. Measure and mark the hinge centrelines on the sash & outer frame
2. Mark, drill & machine to the dimensions shown in details A & B
3. Fasten the outer frame hinge part using 4 x ACUN3512 screws
4. Fasten the sash hinge part using 4 x ACUN3512 screws ensuring the grub screws are positioned towards the door sash
5. Using the outer frame hinge part as a guide, remove excess gasket from the sash
6. Insert Bush (A) into the bottom ring
7. Insert the sash into the frame and screw in the pin (B) with a 4mm Allen Key until a 6mm gap is reached
8. Open the sash and screw in the security screws (C) & (D)
9. Fit cover and insert caps

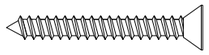

ACUN3512
No.8 x 32 CSK SS
Self Tapping Screw

Do Not Scale From This Drawing

Lock Overview of Single and Double Doors

Finger Bolt Locking Options

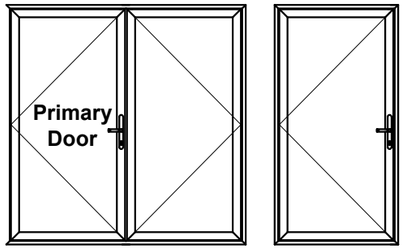

Single & Primary Door Lock Selection

Overall Sash Height	Lift Lever		Slam Lock**		Key Wind	
	Left	Right	Left	Right	Left	Right
2030-2230 (Standard)	ACUL272	ACUL273	ACUL280	ACUL281	ACUL282	ACUL283
1820-2029 (Short)	ACUL377	ACUL378	ACUL360	ACUL361	ACUL362	ACUL363
2231-2450* (Tall)	ACUL374	ACUL375	ACUL380	ACUL381	ACUL382	ACUL383

*Any doors above 2450mm are above the tested limit.
**No lever handles installed externally.

Secondary Door Accessory Selection

35mm Backset Shootbolt Adaptor	Bottom 10mm Dia Rod	Top 10mm Dia Rod		Keep	Shootbolt Guide
		Overall Size	Rod Part No.		
ACPD844 	ACPD846 (1000mm)	1820 - 1923	ACPD846 (1000mm)	ACUL390 (2 Required)	ACUL242 (2 Required)
		1923 - 2173	ACPD847 (1250mm)		
		2174 - 2323	ACPD848 (1500mm)		
		2323 - 2423*	ACPD848 (1500mm)		

*For doors above 2423mm, use ACPD849 (2000mm)

Lift Lever Locking Options

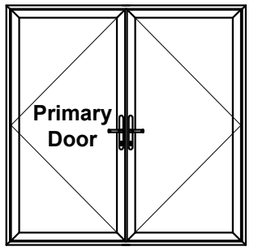

Double Handle Lift Lever Lock Option

Overall Sash Height	Primary Door Lift Lever		Secondary Door Lift Lever	Double Door Keep	Shootbolts	Shootbolt Extensions
	Left	Right				
1885-2450*	ACUL277	ACUL278	ACUL276	ACUL279	ACDV737 ACDV738	ACDV742 ACDV744

*Any doors above 2450mm are above the tested limit.
**Please see page E80 for shootbolt layout.

Keep Handing Guide

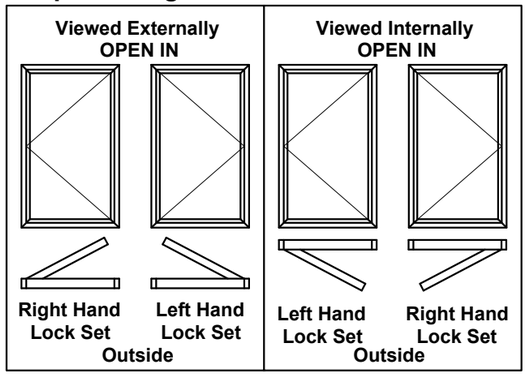

For ACUL267 & 268 Cam Lock Option Refer To Page E95

Do Not Scale From This Drawing

Single Door Lock Preparation

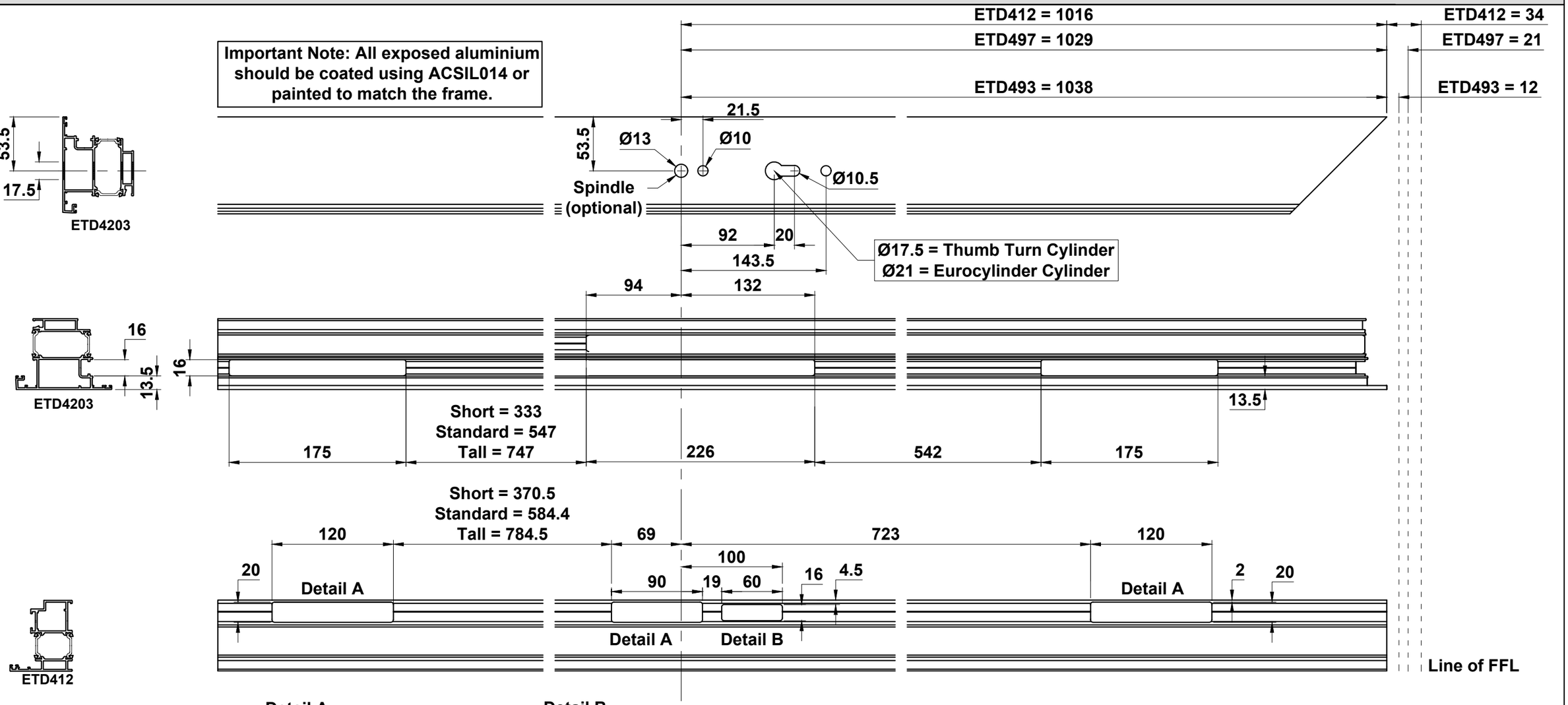

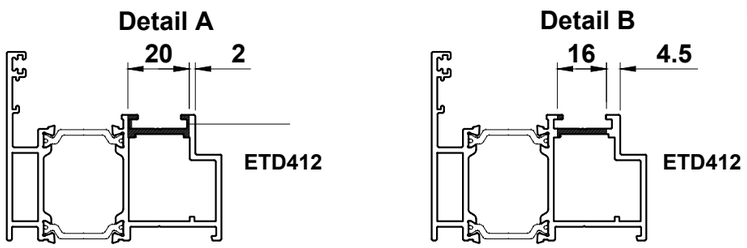

Lock Kits

	Slam Lock		Key Wind		Lift Lever	
Height	Left Hand	Right Hand	Left Hand	Right Hand	Left Hand	Right Hand
Short	ACUL360	ACUL361	ACUL362	ACUL363	ACUL377	ACUL378
Standard	ACUL280	ACUL281	ACUL282	ACUL283	ACUL272	ACUL273
Tall	ACUL380	ACUL381	ACUL382	ACUL383	ACUL374	ACUL375

Do Not Scale From This Drawing

Double Door Lift Lever Shootbolt Layout

Note: ACDV742 & ACDV744 extensions may used with all locks

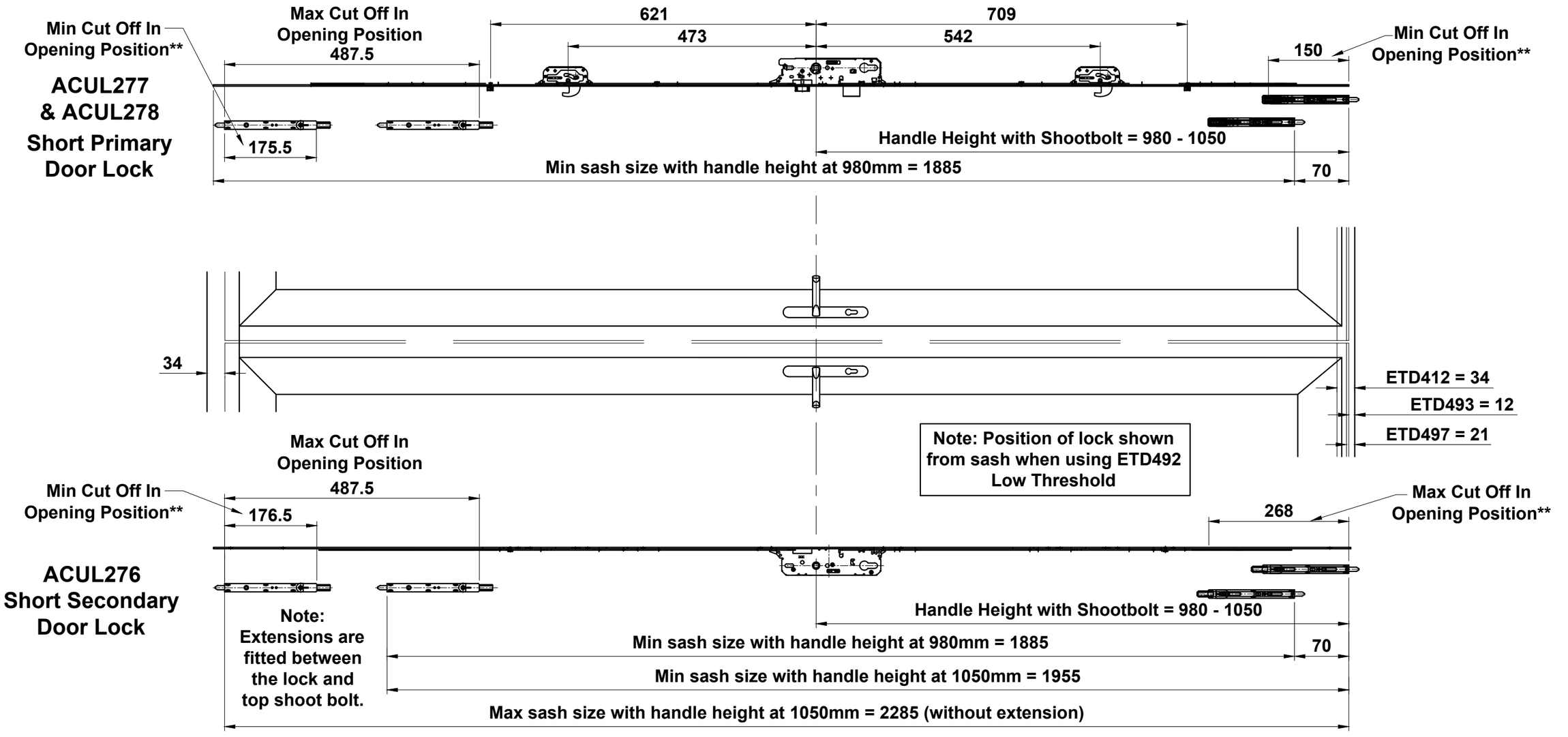

*Maximum sash height is 2500mm. Sizes shown here only indicate sizes with ACDV744.

Do Not Scale From This Drawing

Flush Double Door Lift Lever Lock Preparation for Full Frame

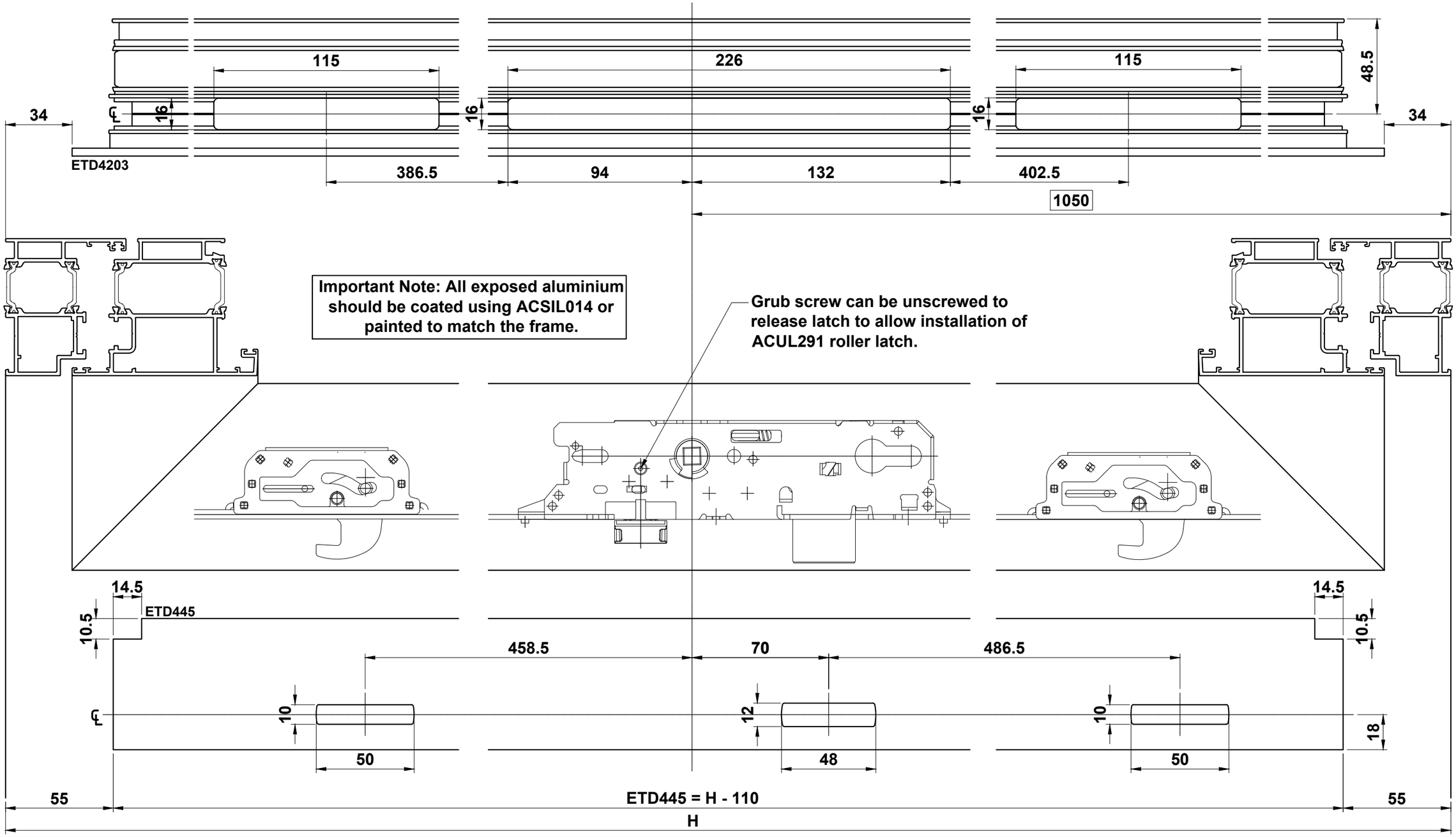

Do Not Scale From This Drawing

Flush Double Door Lift Lever Meeting Stile Assembly for Full Frame

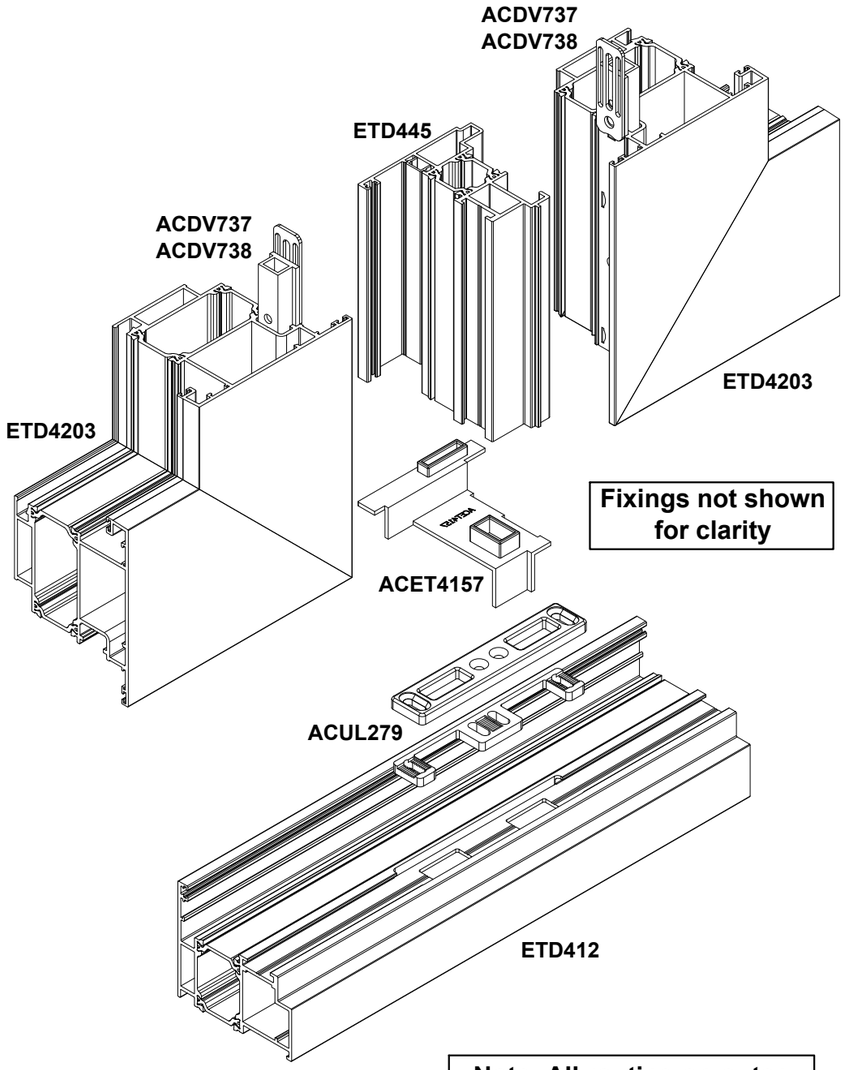

Fixings not shown for clarity

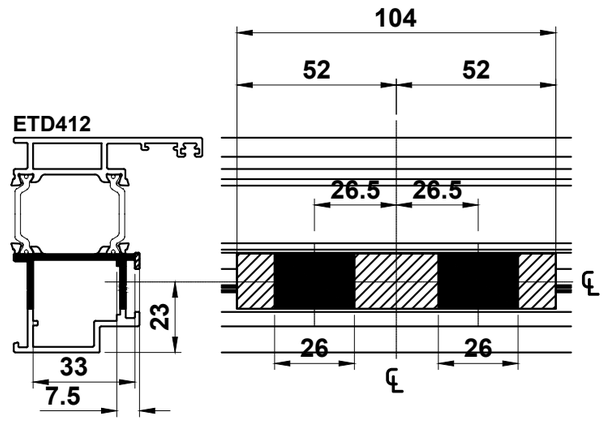

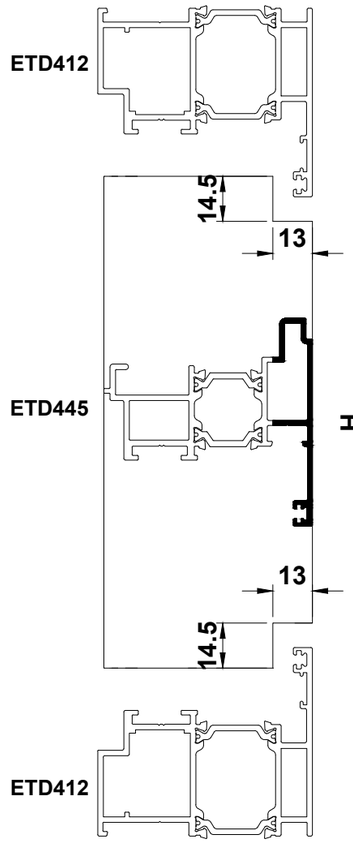

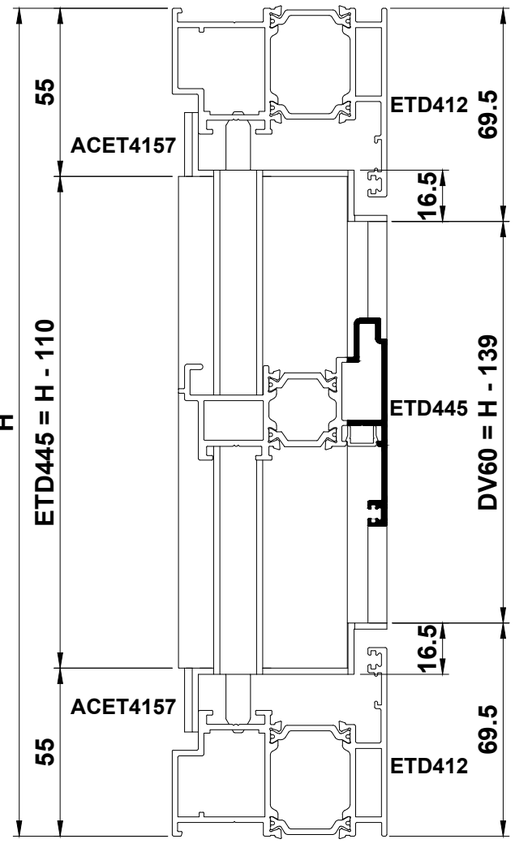

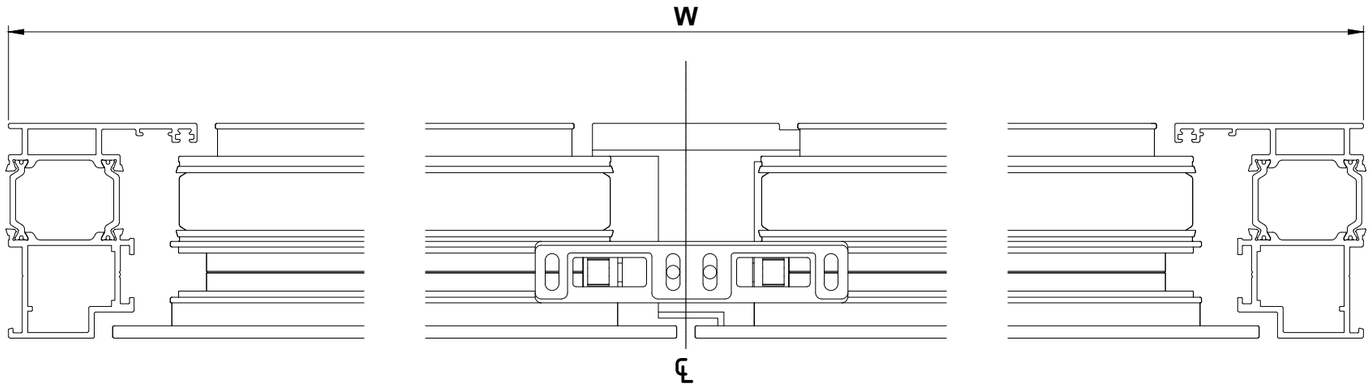

Note: All routing on outer frame require sealant to stop water leakage

Do Not Scale From This Drawing

Flush Double Door Lift Lever Lock Preparation for Low Rebate Threshold

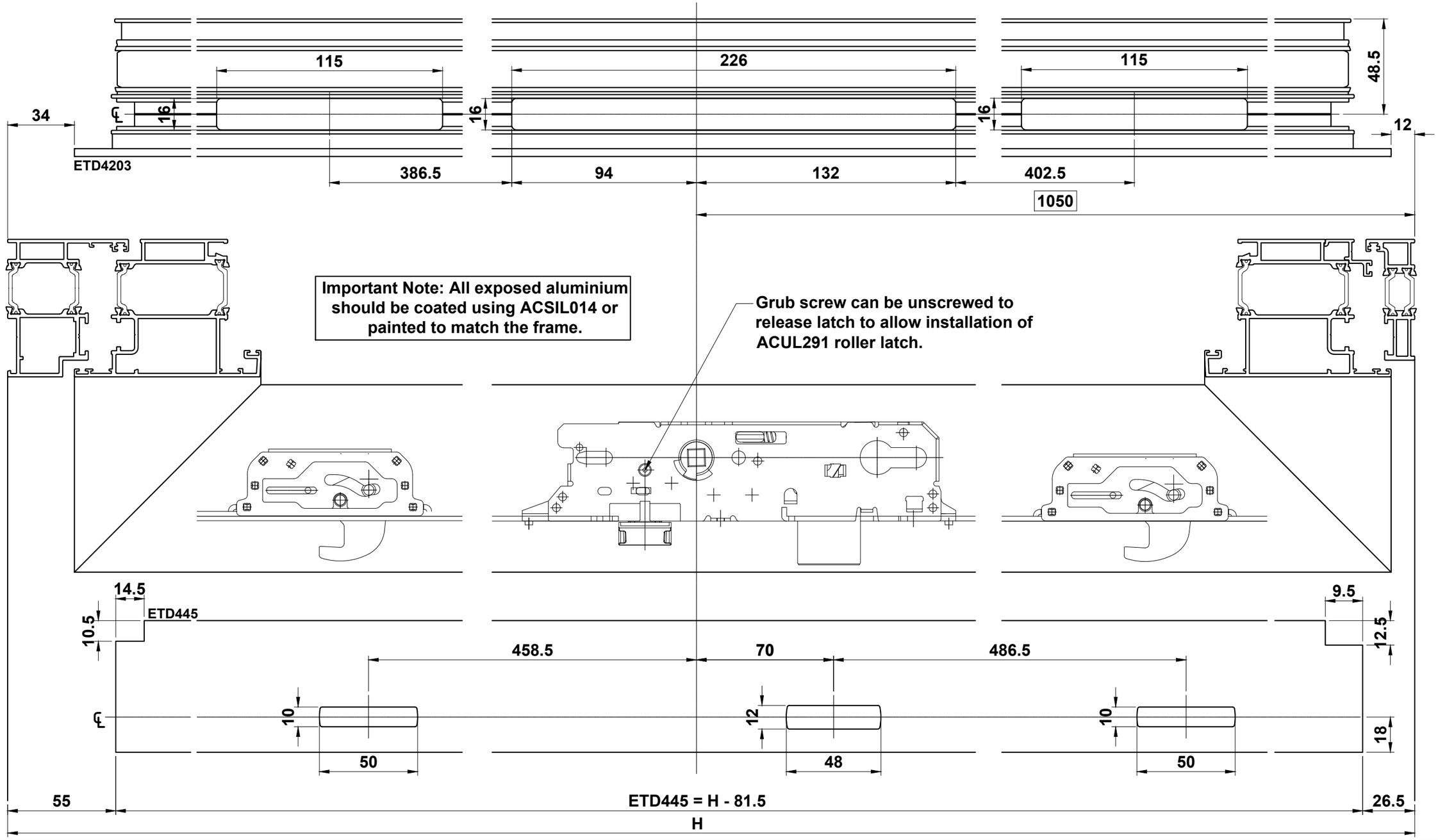

Do Not Scale From This Drawing

Flush Double Door Lift Lever Meeting Stile Assembly for Low Rebate Threshold

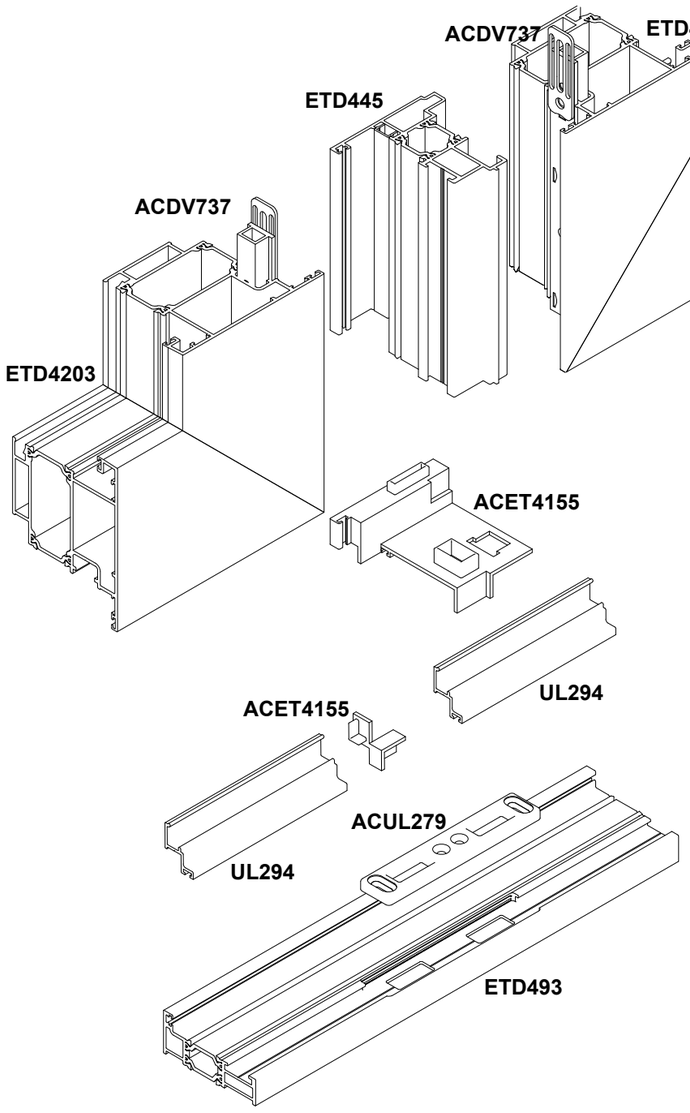

Note: All routing on outer frame require sealant to stop water leakage

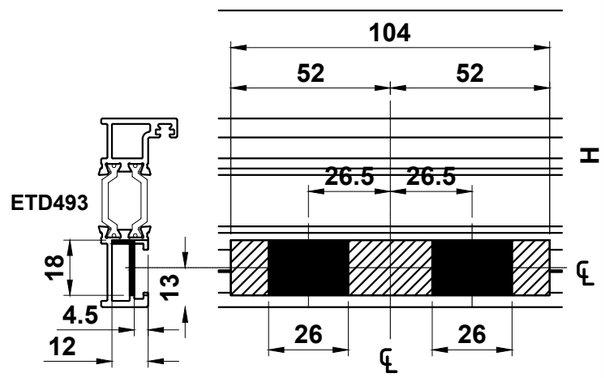

Fixings not shown for clarity

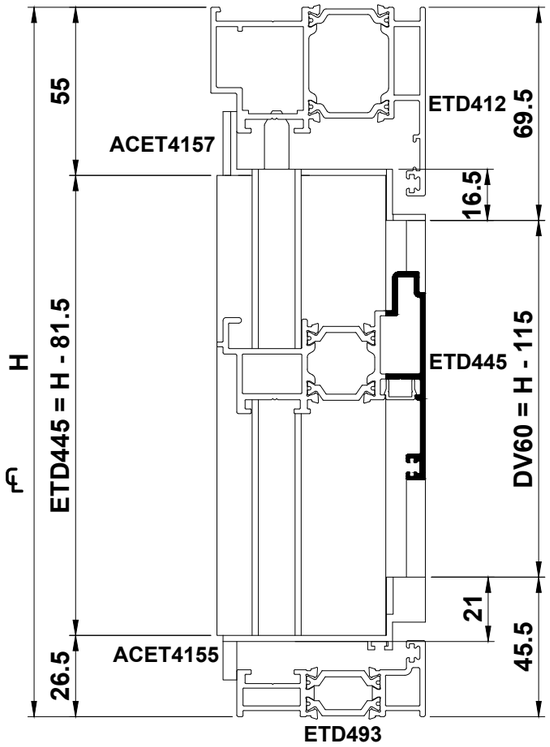

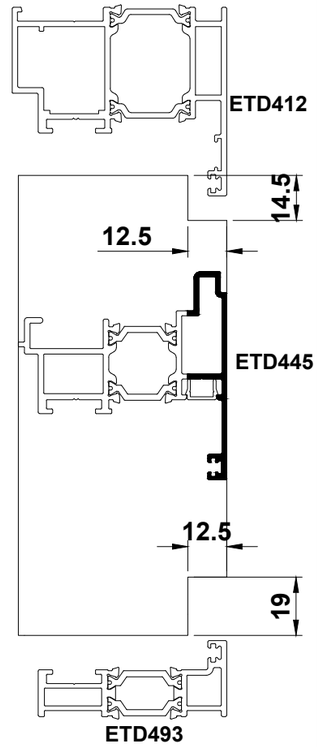

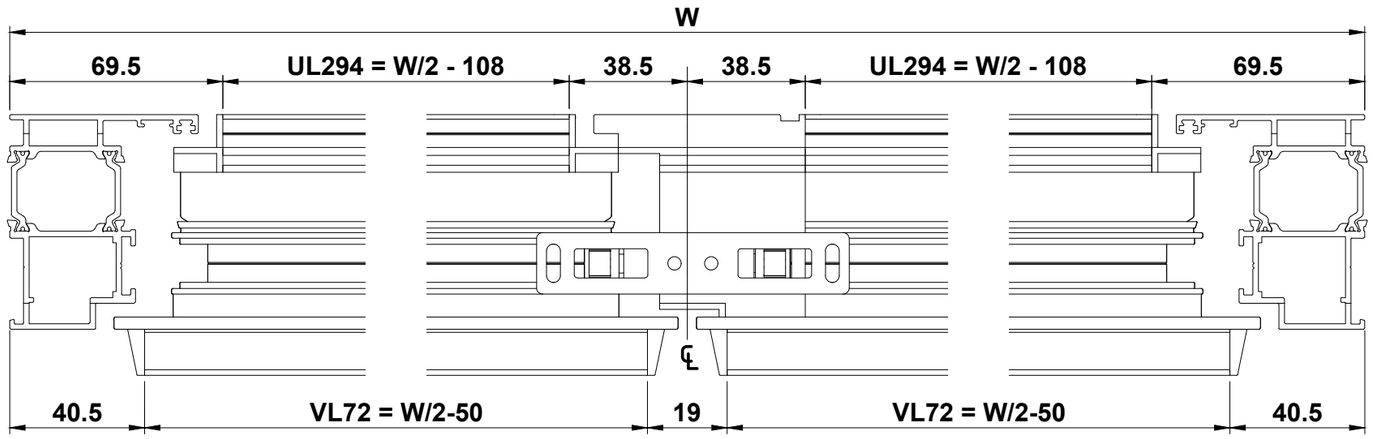

Do Not Scale From This Drawing

Flush Double Door Lift Lever Lock Preparation for Low Ramp Threshold

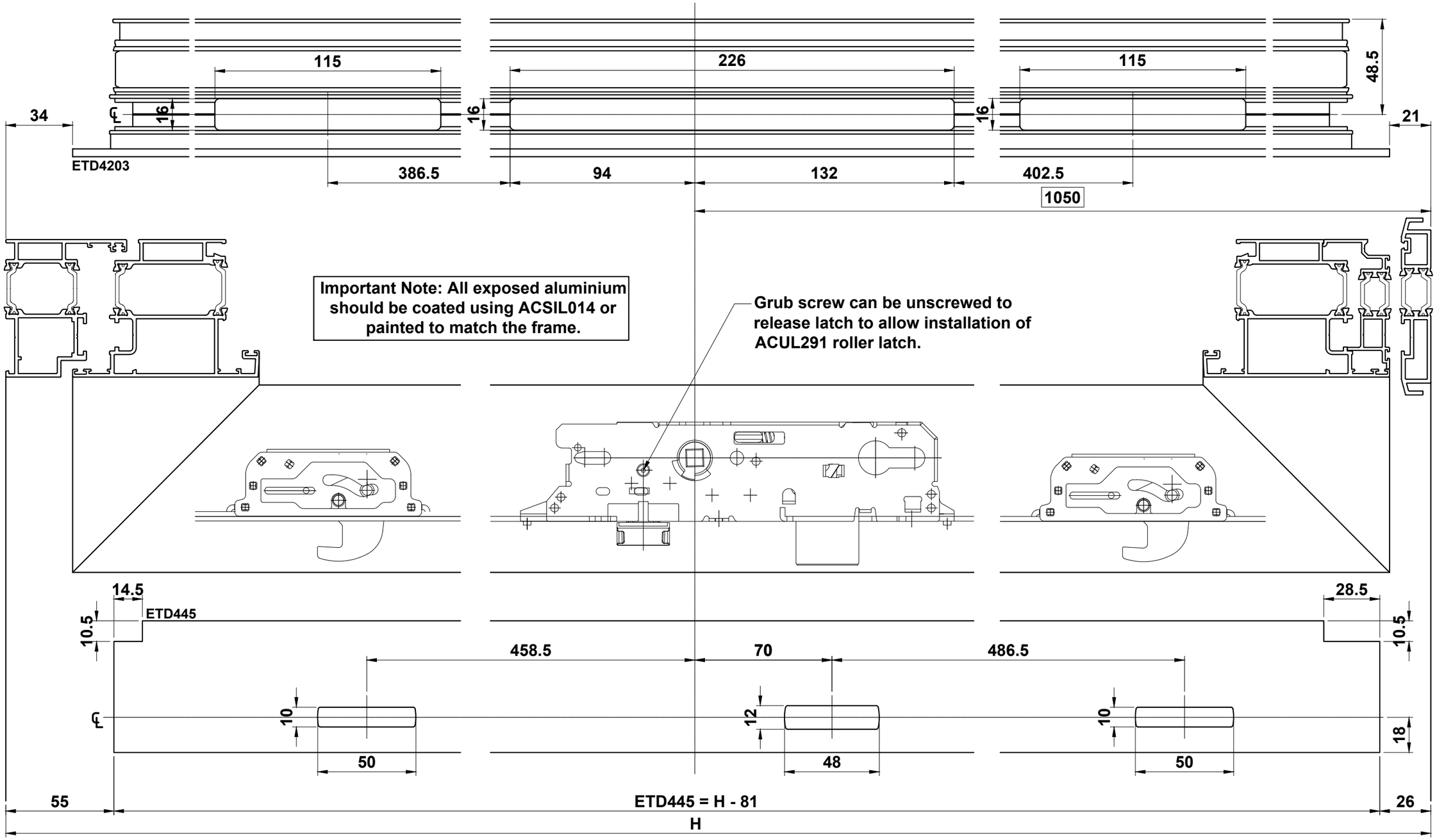

Do Not Scale From This Drawing

Double Door Lift Lever Meeting Stile Assembly for Low Ramp Threshold

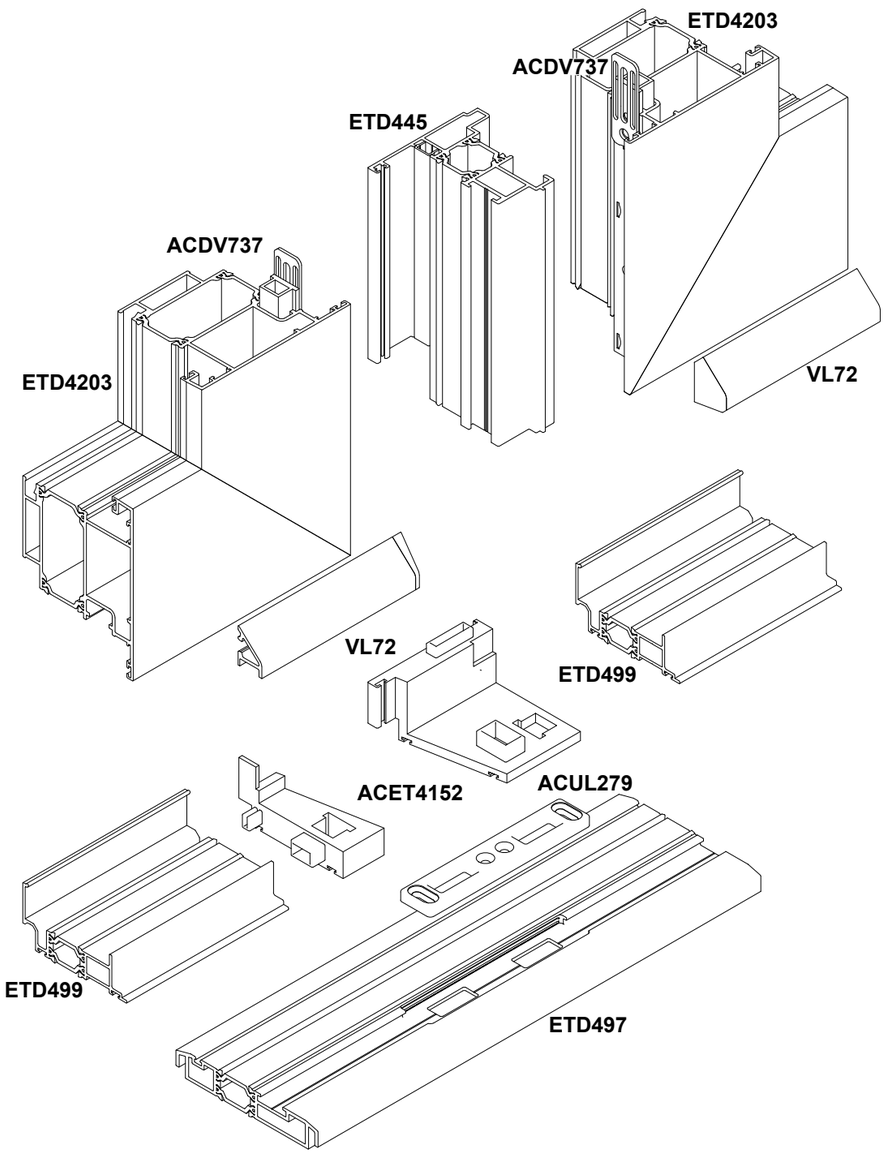

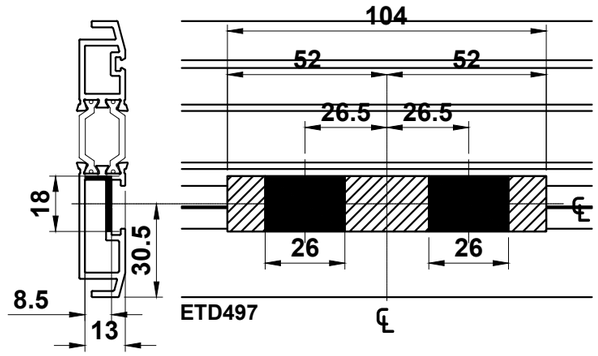

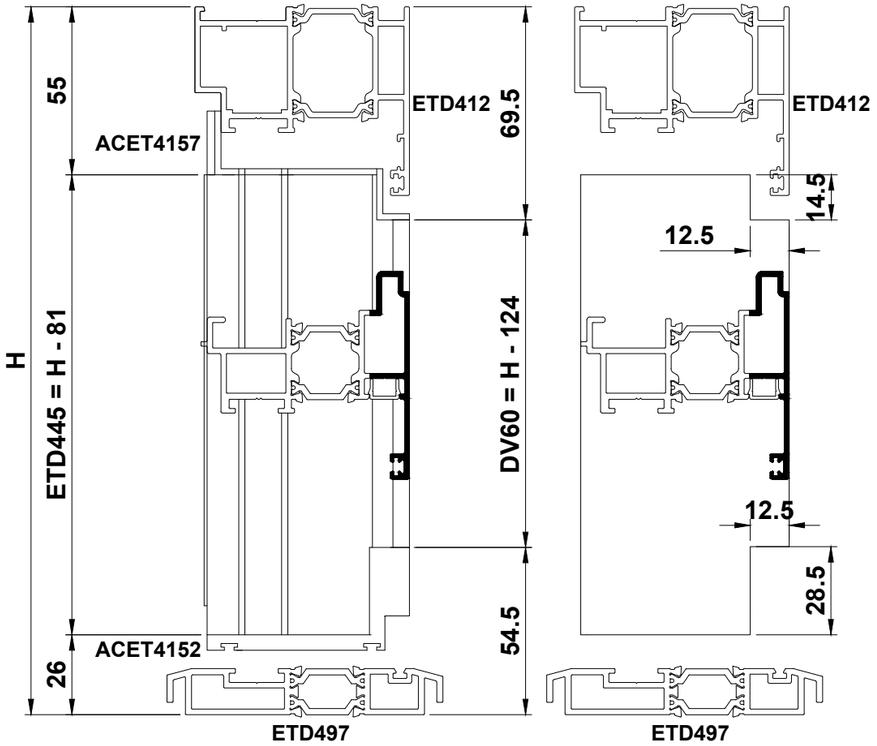

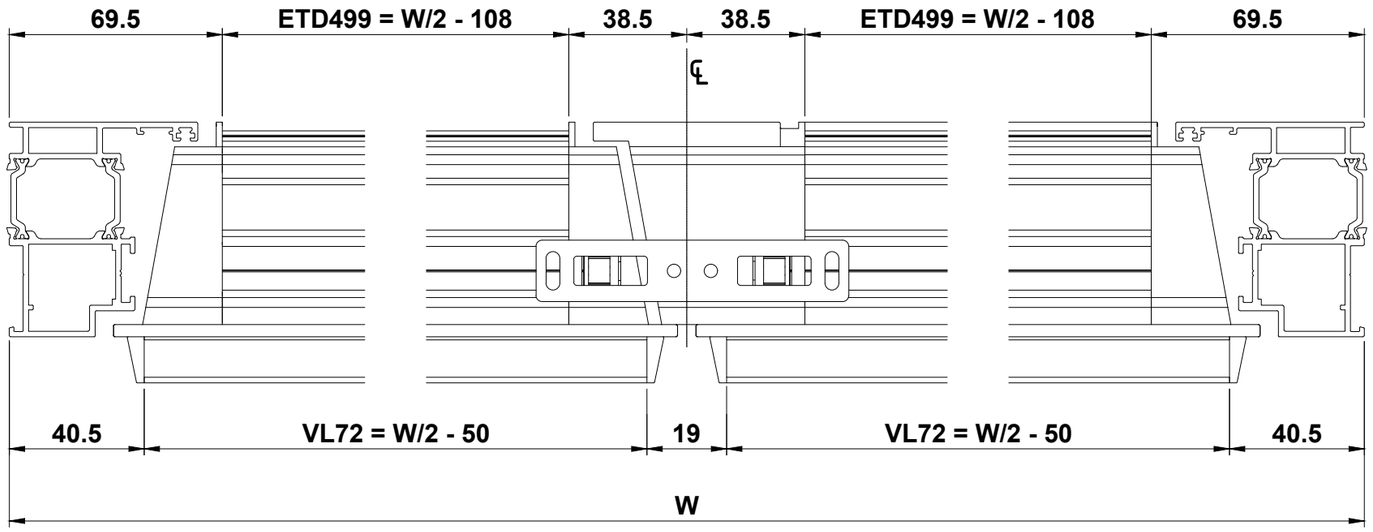

Do Not Scale From This Drawing

ACUL267 & ACUL268 Lift Lever Lock Preparation

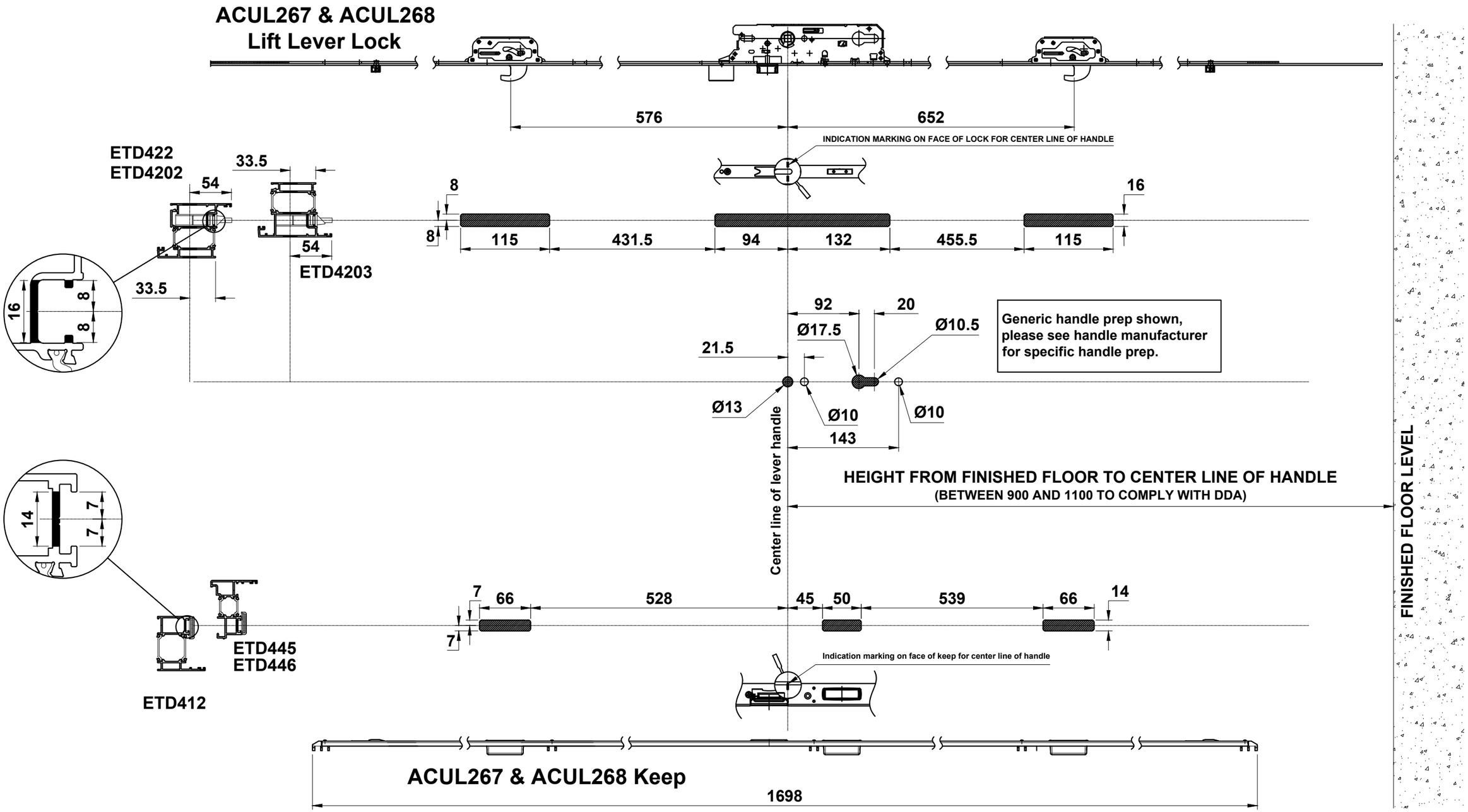

Do Not Scale From This Drawing

Flush Double Door Finger Bolt Lock Preparation for Full Frame

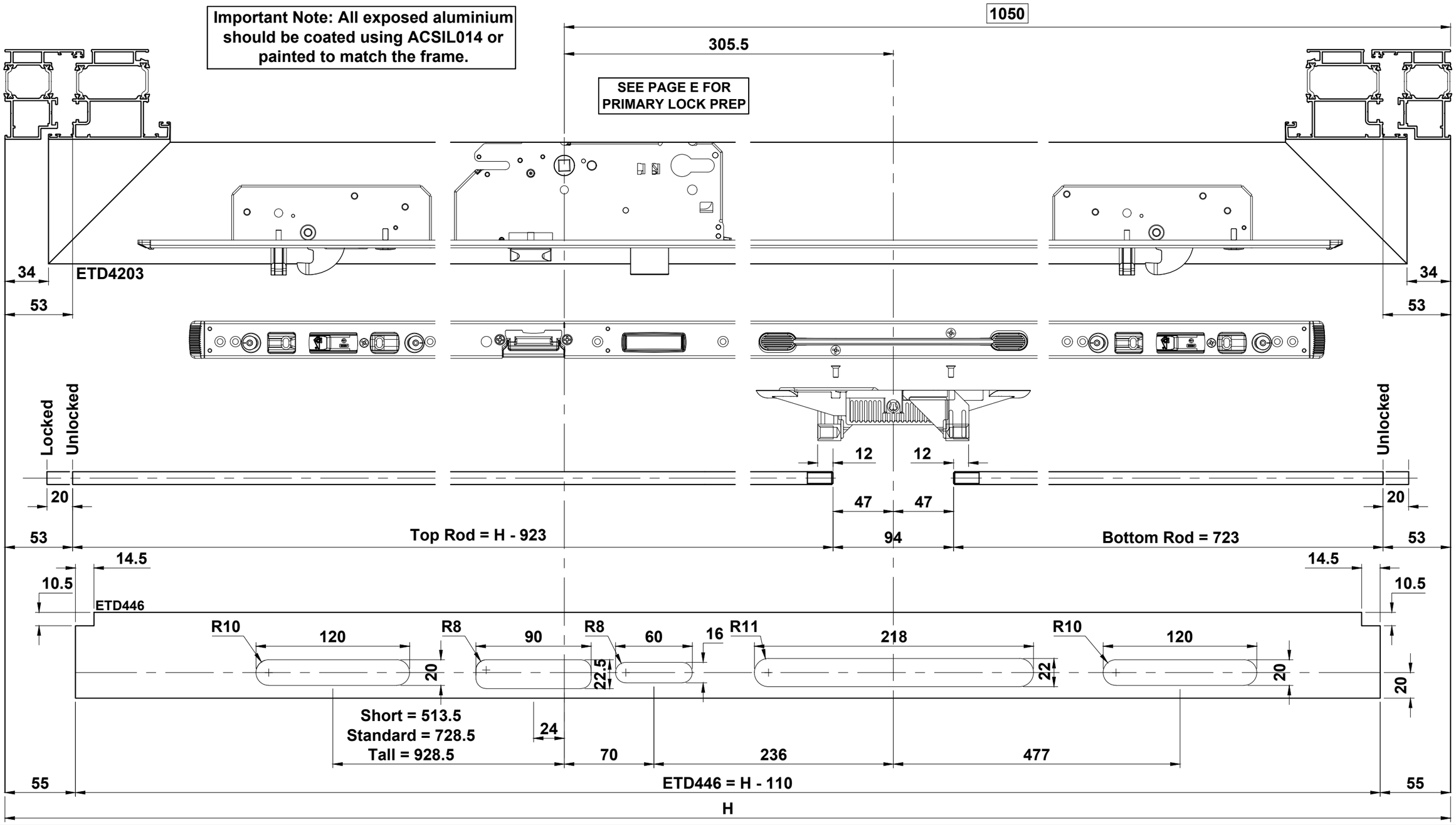

Do Not Scale From This Drawing

Flush Double Door Finger Bolt Meeting Stile Assembly for Full Frame

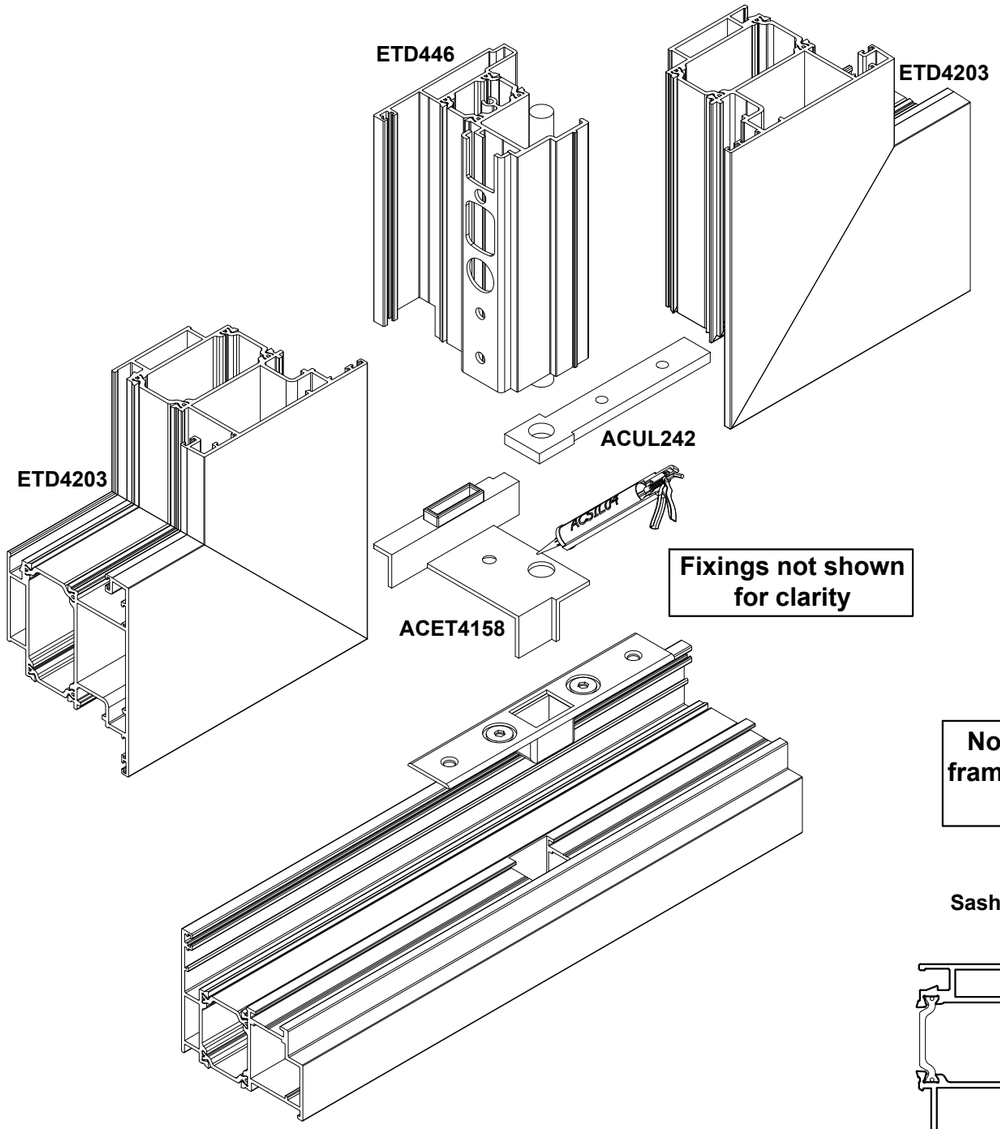

Fixings not shown for clarity

Note: All routing on outer frame require sealant to stop water leakage

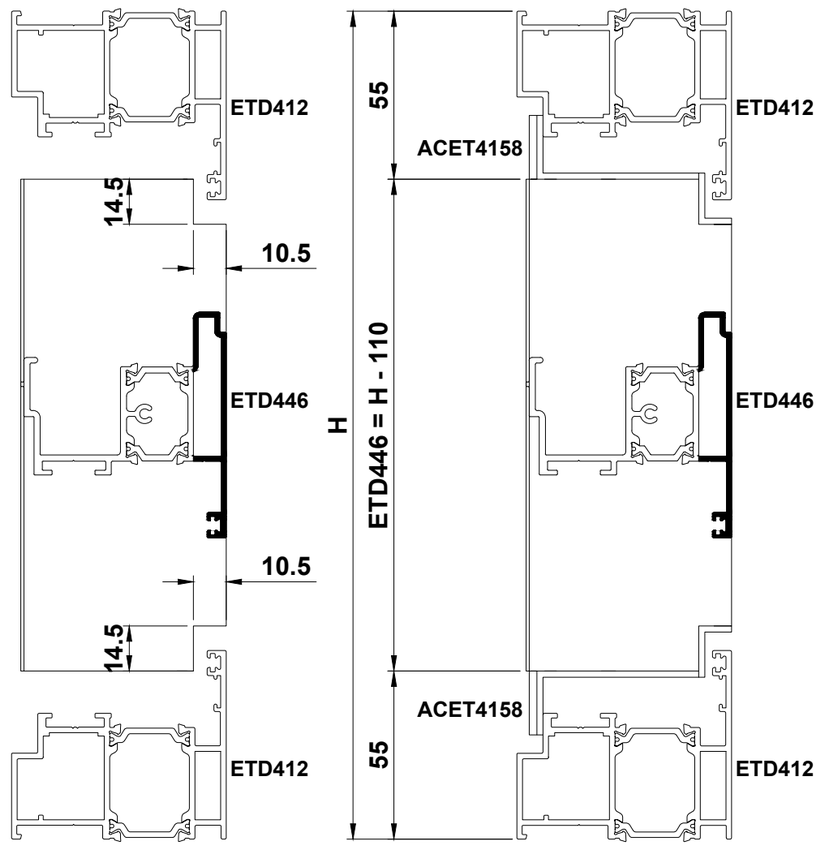

Sash to be notched to allow ACUL242 to fit into position

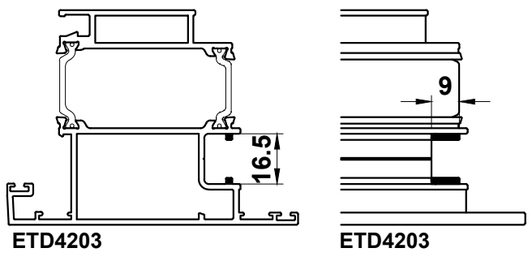

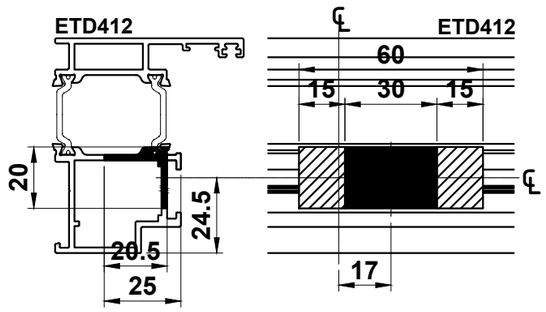

Do Not Scale From This Drawing

Flush Double Door Finger Bolt Lock Preparation for Low Rebate Threshold

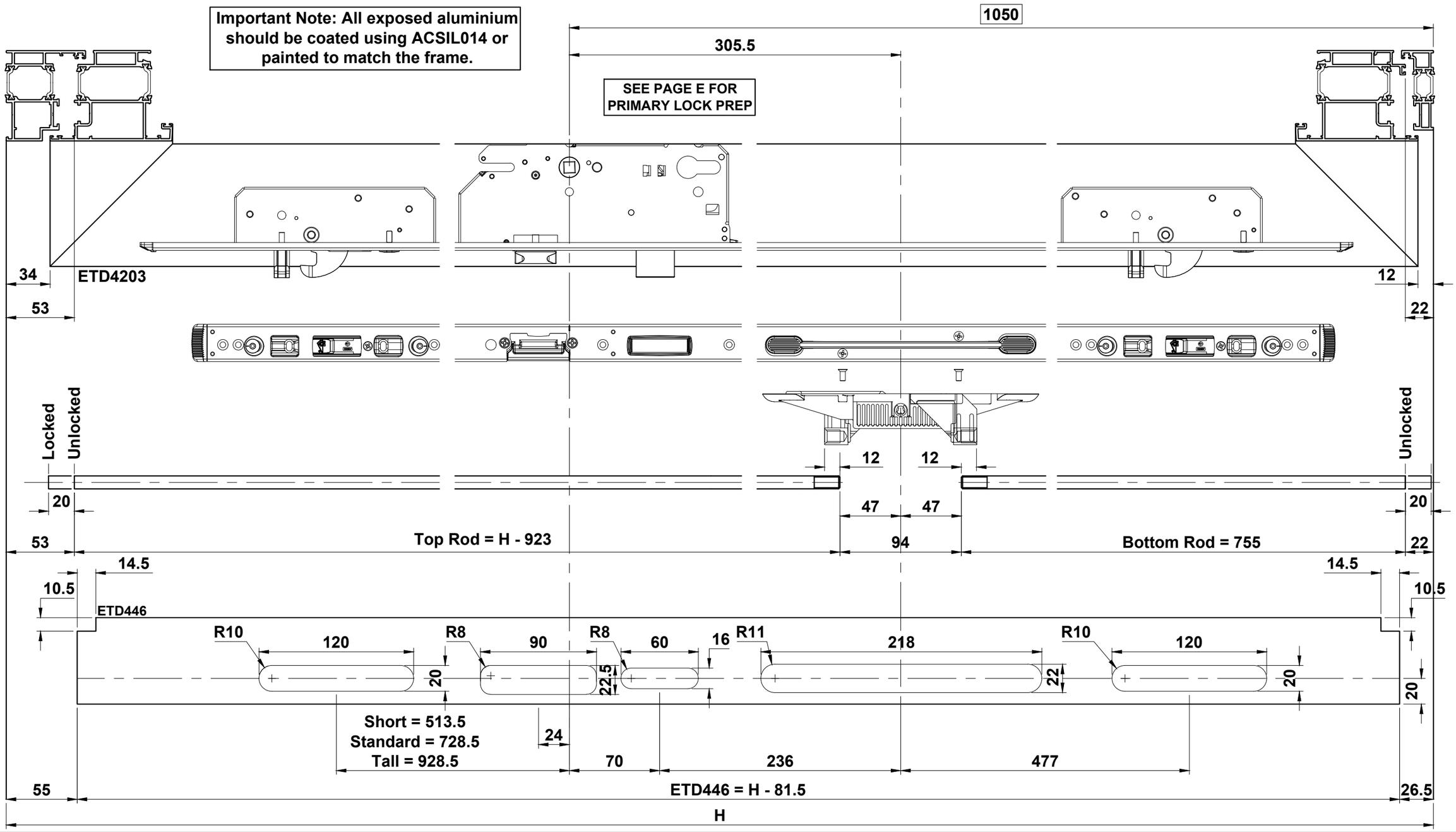

Do Not Scale From This Drawing

Flush Double Door Finger Bolt Meeting Stile Assembly for Low Rebate Threshold

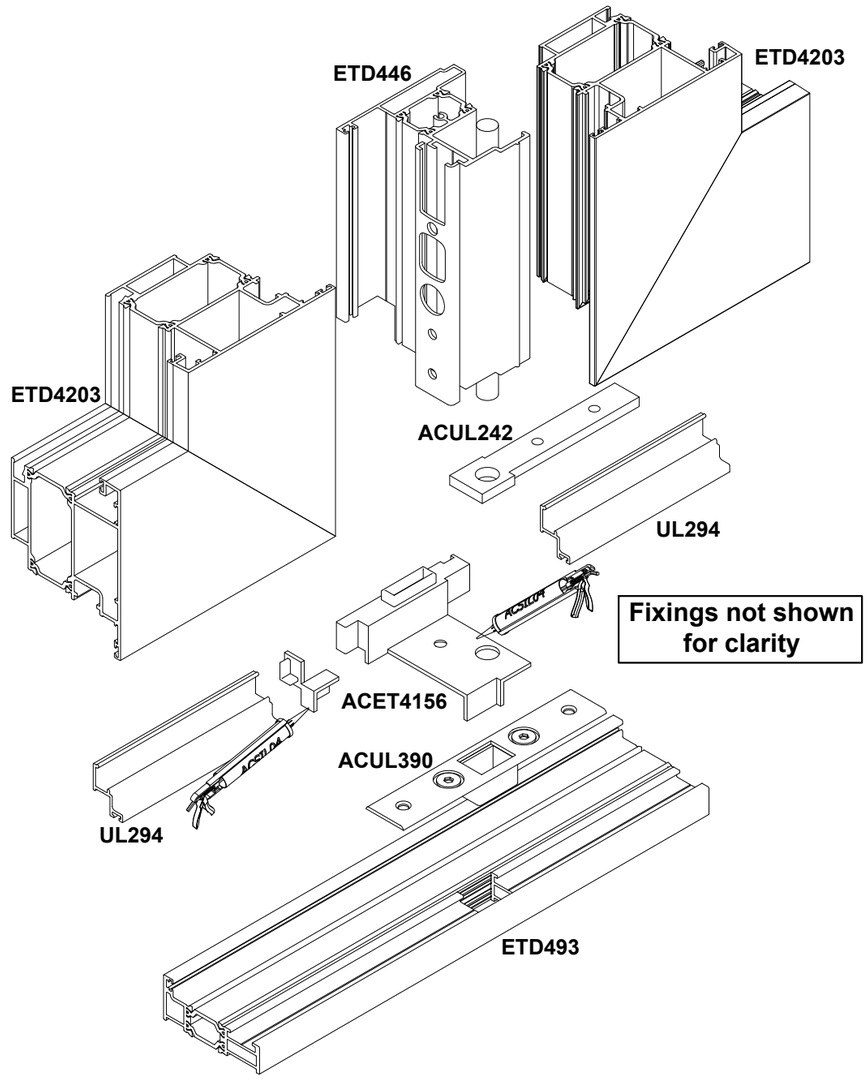

Fixings not shown for clarity

Note: All routing on outer frame require sealant to stop water leakage

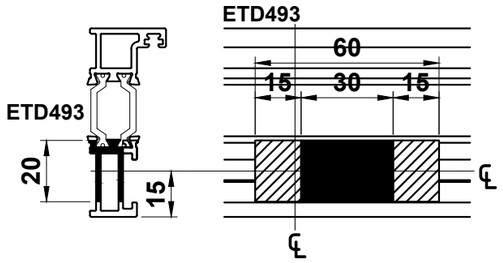

Sash to be notched to allow ACUL242 to fit into position

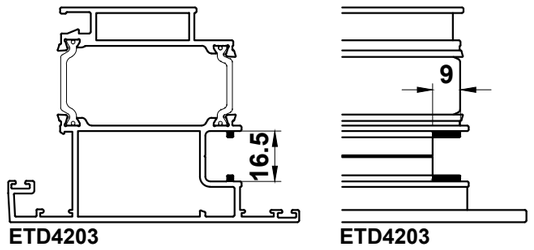

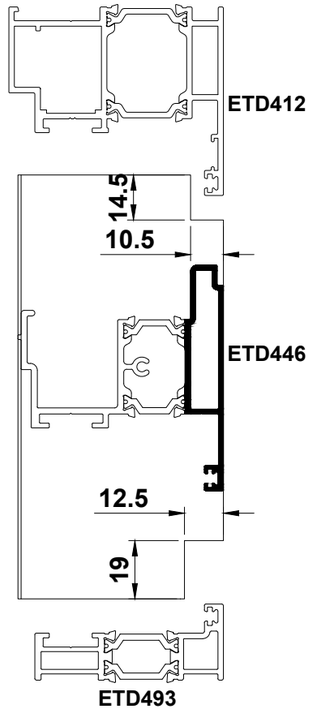

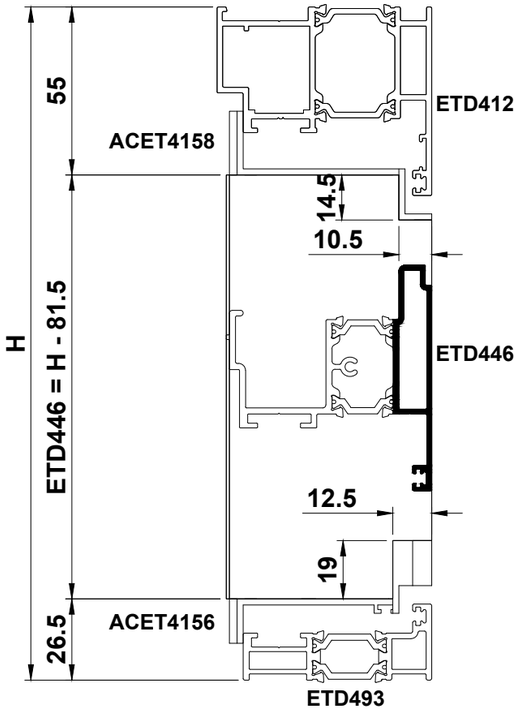

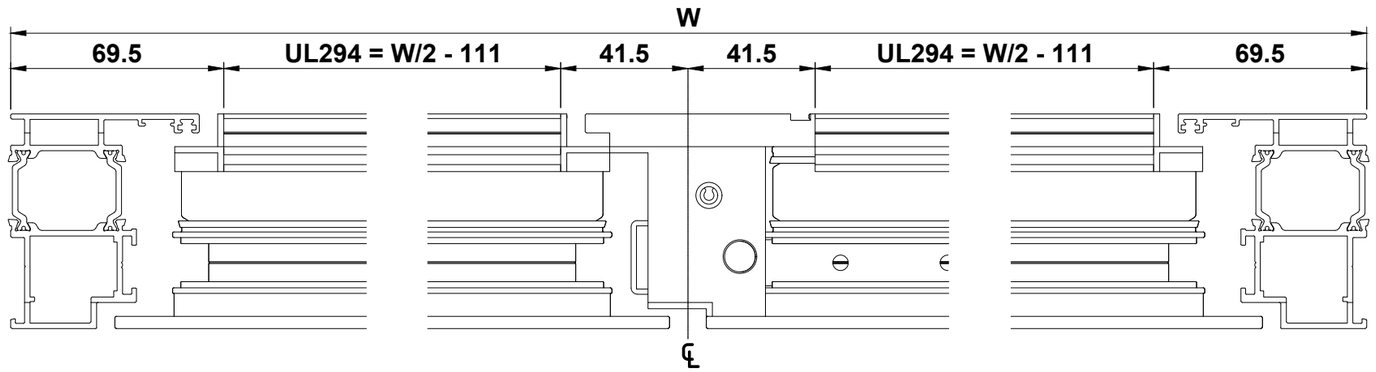

Do Not Scale From This Drawing

Flush Double Door Finger Bolt Lock Preparation for Low Ramp Threshold

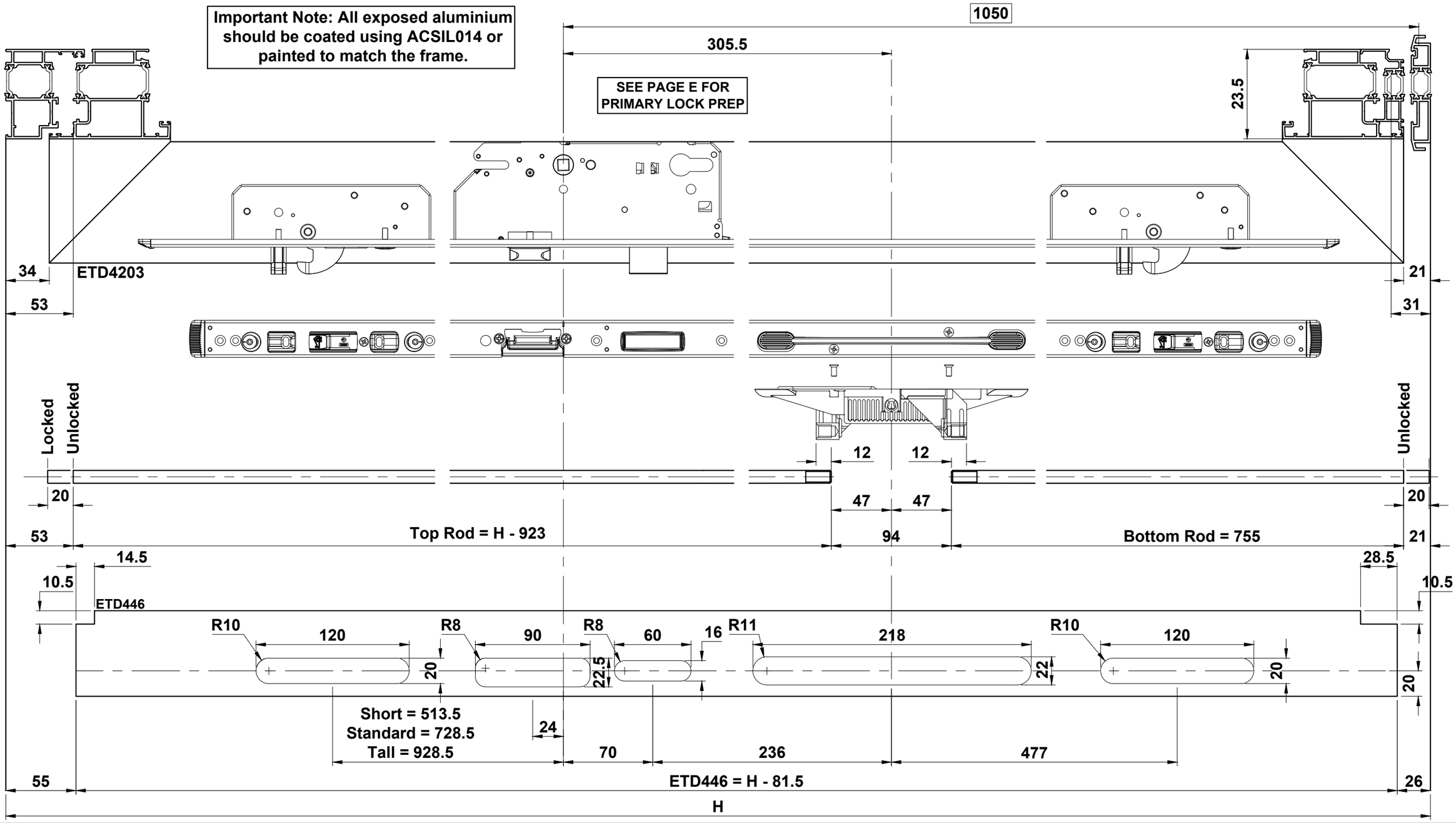

Do Not Scale From This Drawing

Flush Double Door Finger Bolt Meeting Stile Assembly for Low Ramp Threshold

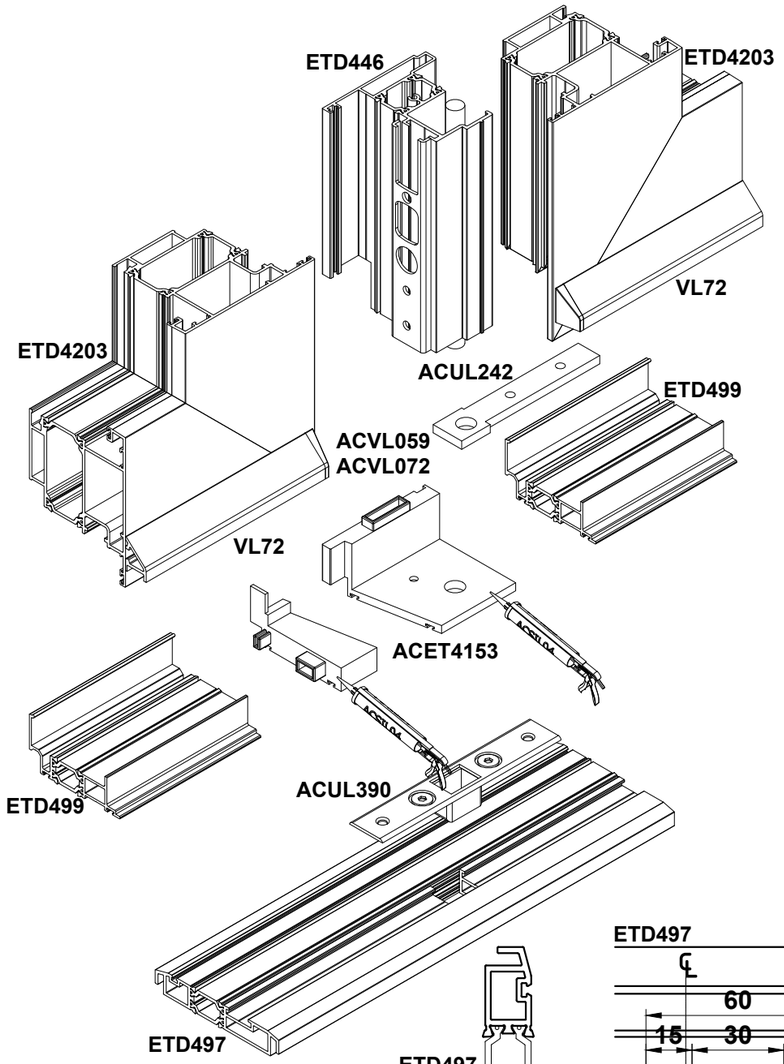

Sash to be notched to allow
ACUL242 to fit into position

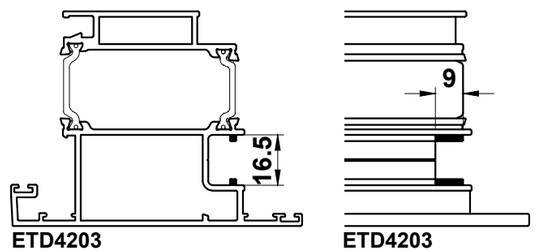

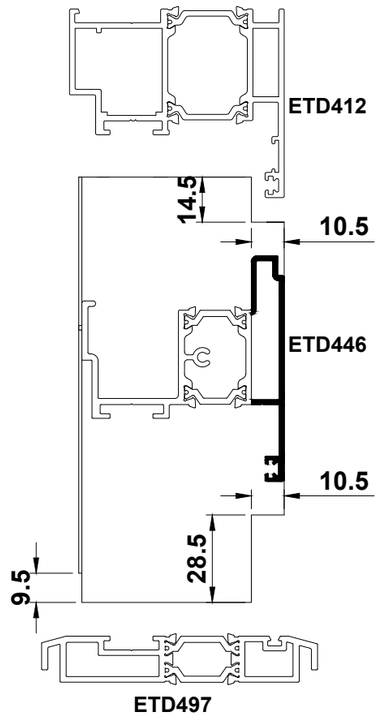

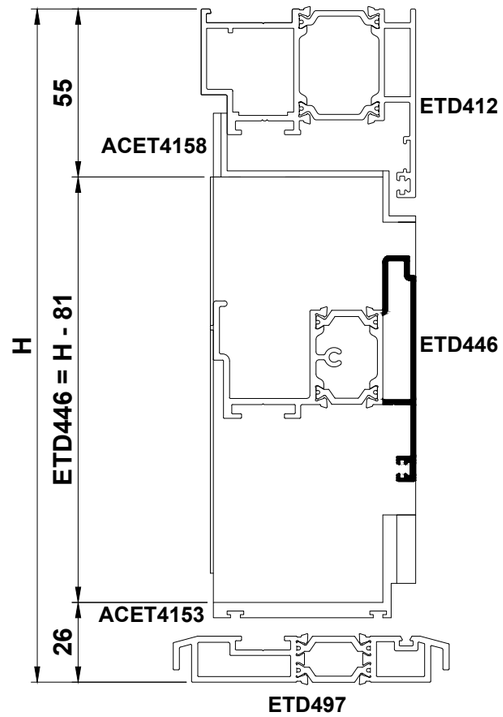

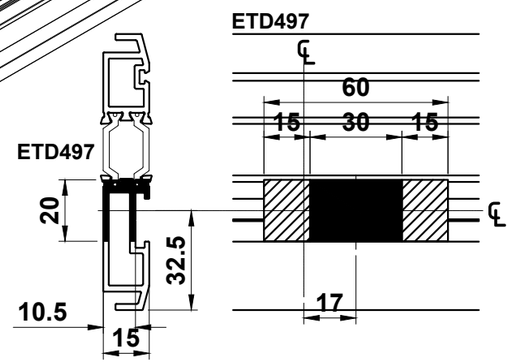

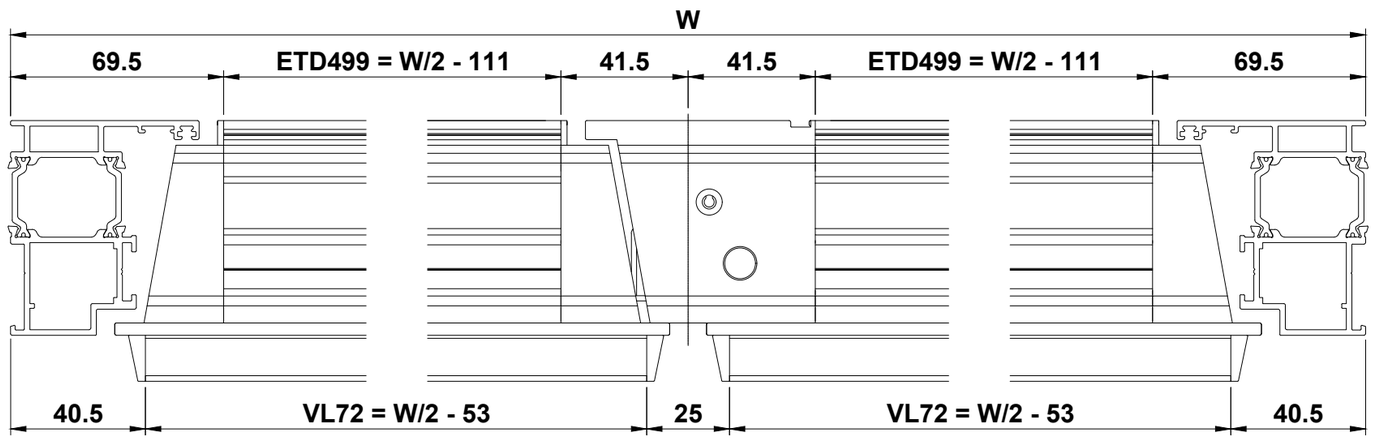

Do Not Scale From This Drawing

Letter Plate Fitting

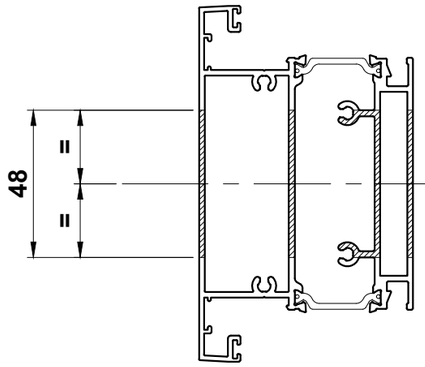

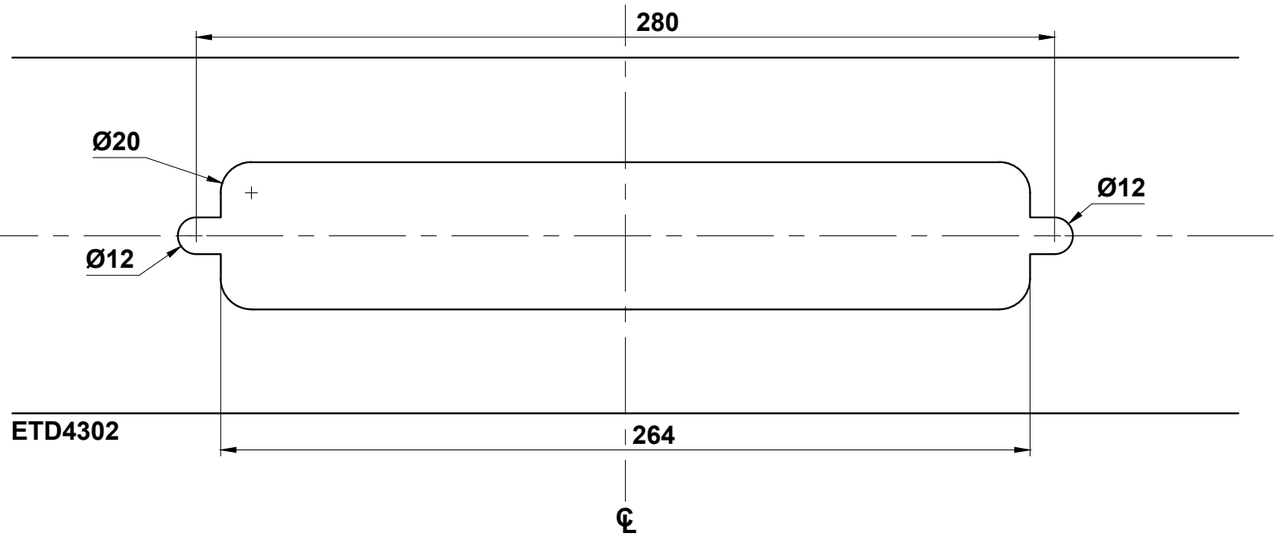

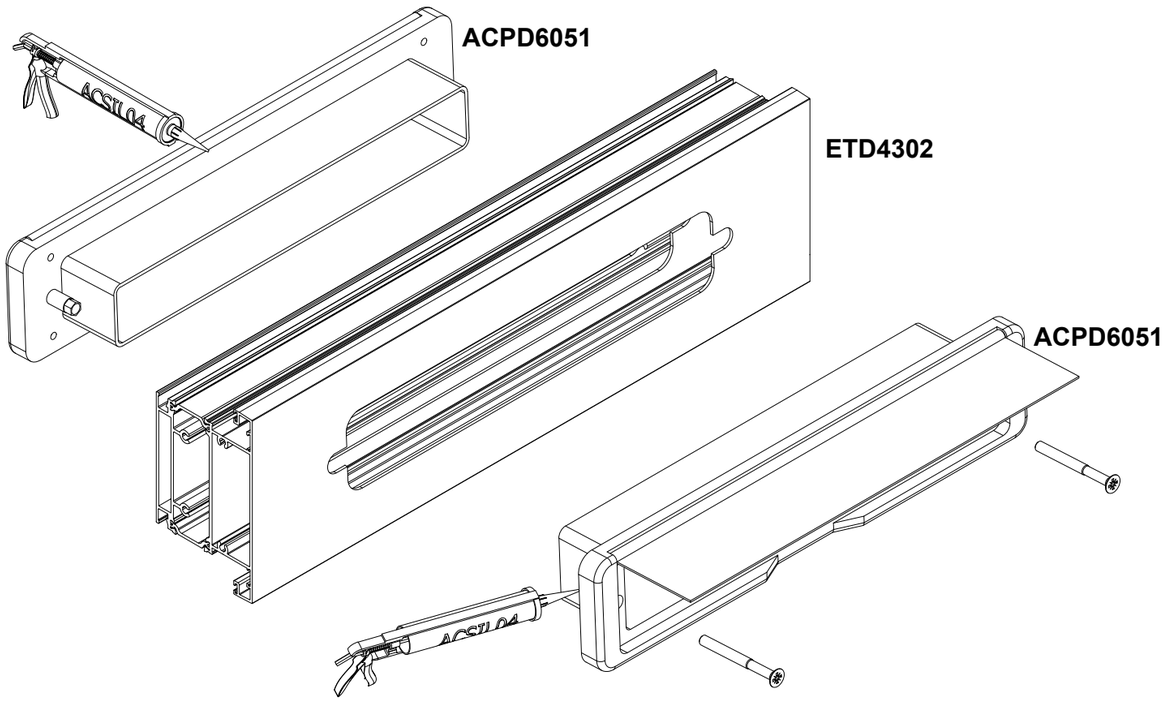

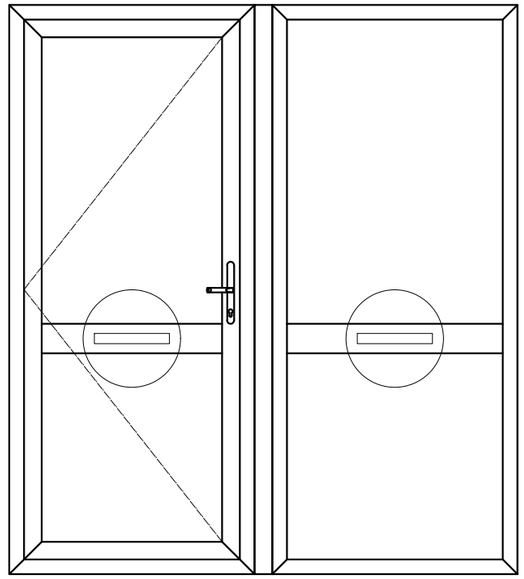

Do Not Scale From This Drawing

Glazing Chart

28mm Glazing

Integrated Gasket

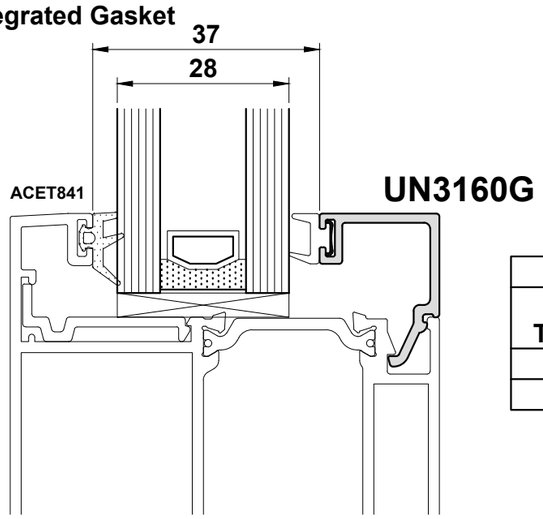

ETD4203

Low Profile Gaskets		
Glazing Thickness	External Gasket	Internal Gasket
28	ACET841	-
29 (28.8)	ACET842	-

36mm Glazing

Integrated Gasket

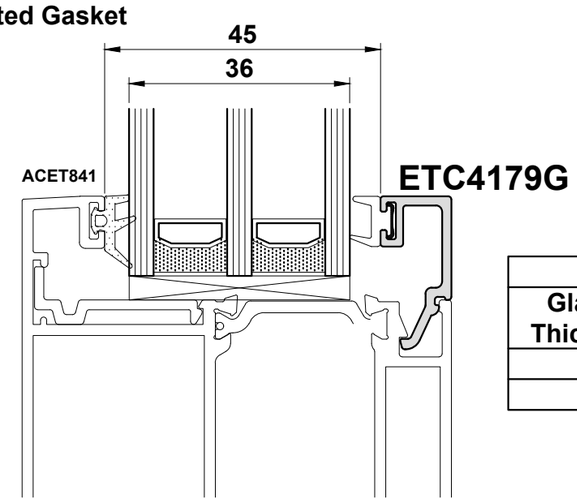

ETD4203

Low Profile Gaskets		
Glazing Thickness	External Gasket	Internal Gasket
36	ACET841	-
37	ACET842	-

24-26mm Glazing

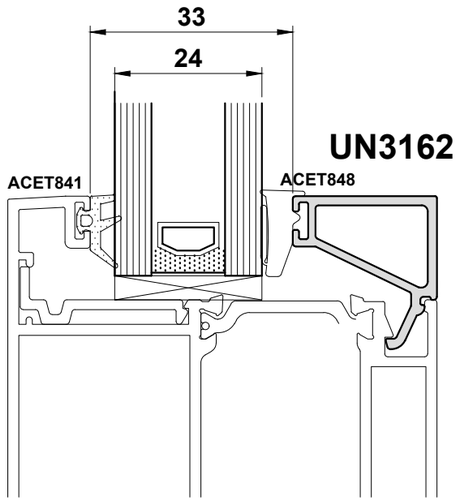

ETD4203

Low Profile Gaskets		
Glazing Thickness	External Gasket	Internal Gasket
24	ACET841	ACET848
25	ACET842	ACET848
26	ACET843	ACET848

Standard Gaskets		
Glazing Thickness	External Gasket	Internal Gasket
24	ACVG31	ACUN036
25	ACVG231	ACUN036
26	ACVG231	ACUN036

28-30mm Glazing

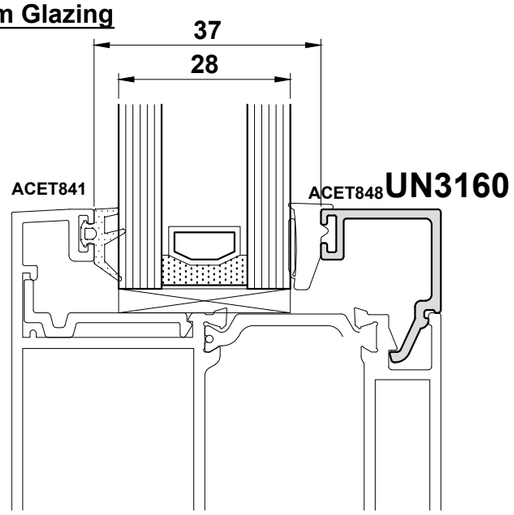

ETD4203

Low Profile Gaskets		
Glazing Thickness	External Gasket	Internal Gasket
28	ACET841	ACET848
29 (28.8)	ACET842	ACET848
30	ACET843	ACET848

Standard Gaskets		
Glazing Thickness	External Gasket	Internal Gasket
28	ACVG31	ACUN036
29 (28.8)	ACVG231	ACUN036
30	ACVG231	ACUN036

Do Not Scale From This Drawing

Glazing Chart

30-32mm Glazing

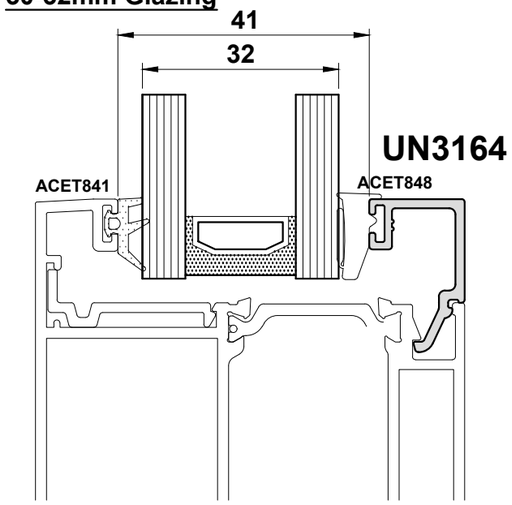

UN3164

Low Profile Gaskets		
Glazing Thickness	External Gasket	Internal Gasket
30	ACET841	ACET848
31	ACET842	ACET848
32	ACET843	ACET848

Standard Gaskets		
Glazing Thickness	External Gasket	Internal Gasket
30	ACVG31	ACUN036
31	ACVG231	ACUN036
32	ACVG231	ACUN036

ETD4203

36mm Glazing

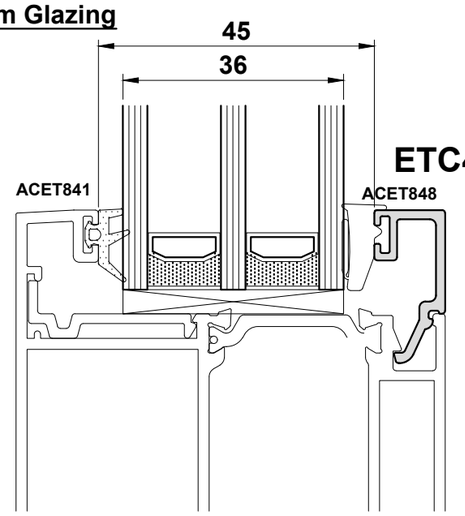

ETC4179

Low Profile Gaskets		
Glazing Thickness	External Gasket	Internal Gasket
36	ACET841	ACET848
37	ACET842	ACET848
38	ACET843	ACET848

Standard Gaskets		
Glazing Thickness	External Gasket	Internal Gasket
36	ACVG31	ACUN036
37	ACVG231	ACUN036
38	ACVG231	ACUN036

ETD4203

44-46mm Glazing

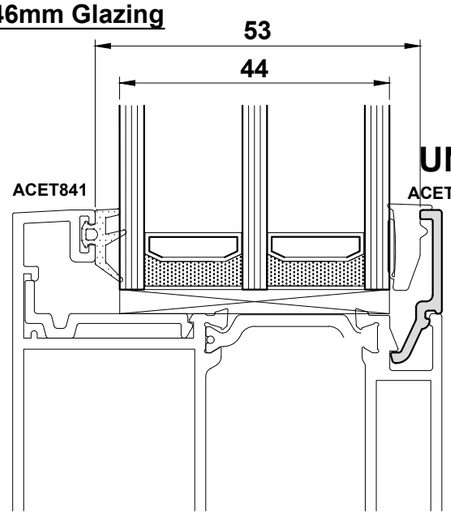

UN3168

Low Profile Gaskets		
Glazing Thickness	External Gasket	Internal Gasket
44	ACET841	ACET848
45	ACET842	ACET848
46	ACET843	ACET848

Standard Gaskets		
Glazing Thickness	External Gasket	Internal Gasket
44	ACVG31	ACUN036
45	ACVG231	ACUN036
46	ACVG231	ACUN036

ETD4203

Do Not Scale From This Drawing

QUICK-GLAZE BEAD INSTALLATION

1. INSTALL GLASS UNIT, ENSURING IT HAS BEEN PUSHED FORWARD TO ENGAGE COMPRESSION OF E GASKET.
2. BEGINNING WITH HORIZONTAL BEADS, LOCATE BEAD IN CLIP CHANNEL OF SASH AS SHOWN. INTEGRATED GASKET MAY REST AGAINST GLASS UNIT.
3. APPLY FIRM PRESSURE TO THE BEAD TO HOLD IN POSITION. THIS MAY CAUSE THE BEAD TO FULLY LOCK INTO POSITION.
4. USING A NYLON MALLET, TAP BEAD INTO CHANNEL WORKING FROM ONE END TO THE OTHER. PLEASE TAKE CARE AT THIS STAGE TO AVOID DAMAGE TO BOTH THE GLAZING UNIT AND THE BEAD.
5. REPEAT STEPS 2 - 4 TO INSTALL VERTICAL BEADS.

WE STRONGLY RECOMMEND INSTALLING ACET496 GLASS ADJUSTERS WHEN USING QUICK-GLAZE BEADS. THIS WILL REMOVE THE NEED TO REMOVE BEADS IN ORDER TO ADJUST GLASS POSITION.

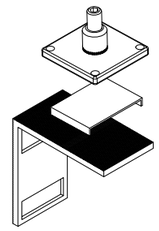

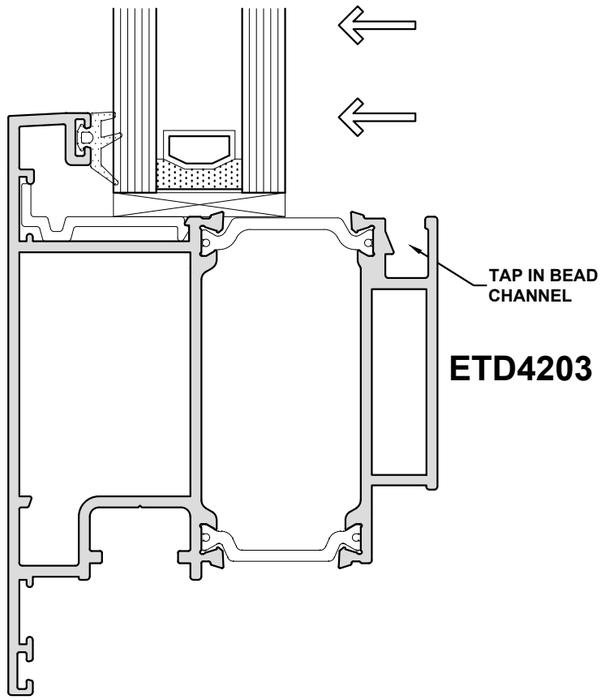

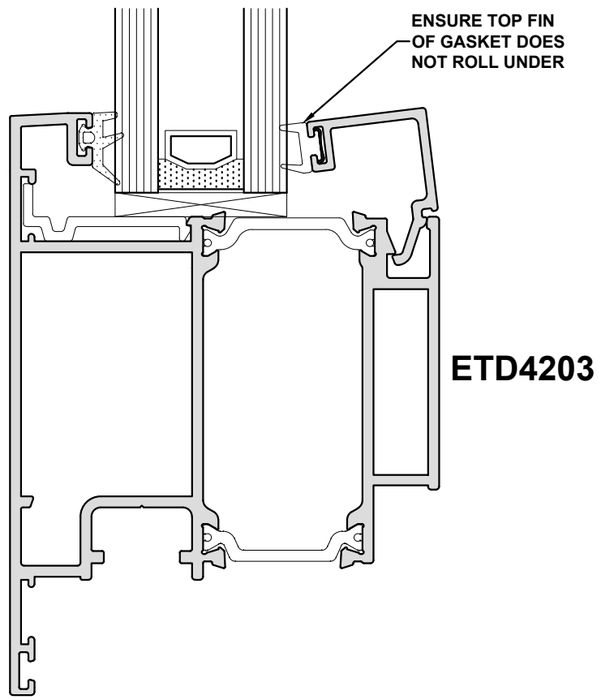

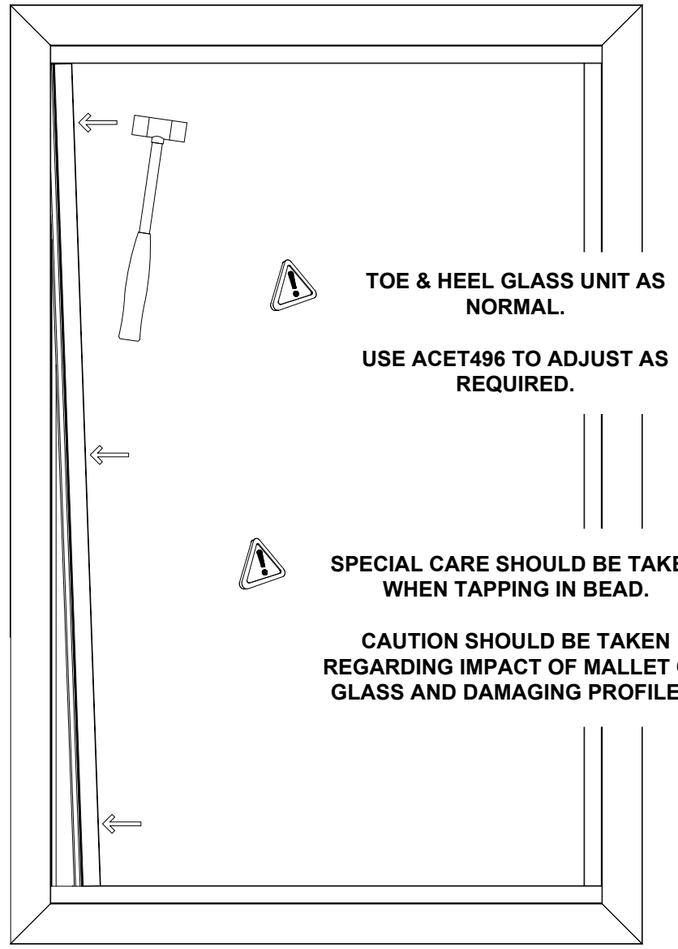

Do Not Scale From This Drawing

KEEP INTEGRATED GASKET

QUICK-GLAZE BEAD REMOVAL

1. STARTING ON VERTICAL BEADS, APPLY PRESSURE TO BEAD IN DIRECTION SHOWN IN ORDER TO CREATE SMALL GAP BETWEEN SASH AND BEAD.
2. GENTLY INSERT DE-GLAZING TOOL TAKING PARTICULAR CARE AS NOT TO DAMAGE PAINT FINISH.
3. SLOWLY PRISE THE BEAD UP AND AWAY FROM THE SASH.
4. THE BEAD SHOULD NOW BE EASILY REMOVABLE FROM QUICK-GLAZE BEAD CHANNEL IN SASH

BEAD AND INTEGRATED GASKET CAN BE REUSED.

OR

REPLACE INTEGRATED GASKET

QUICK-GLAZE BEAD REMOVAL

1. USING SMALL FLAT HEADED SCREWDRIVER OR SIMILAR, WEDGE TIP BETWEEN CO EXTRUDED GASKET AND ALUMINIUM.
2. IN A LEVERING MOTION, PRISE THE GASKET AWAY FROM THE ALUMINIUM. PARTICULAR CARE SHOULD BE TAKEN NOT TO DAMAGE THE GLASS UNIT AND ALUMINIUM.
3. COMPLETE THIS AT SEVERAL LOCATIONS ALONG THE LENGTH OF THE BEAD.
4. REMOVE GASKET AND DISCARD. THIS GASKET CAN NO LONGER BE USED.
5. THE BEAD SHOULD NOW BE EASILY REMOVABLE FROM TAP IN BEAD CHANNEL IN SASH

PLEASE SEE GLAZING CHART FOR REPLACEMENT GASKET CODES.

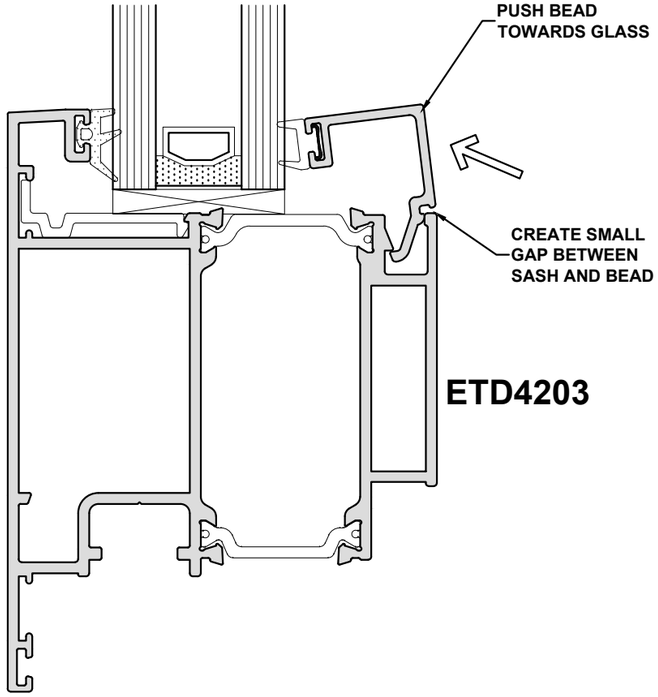

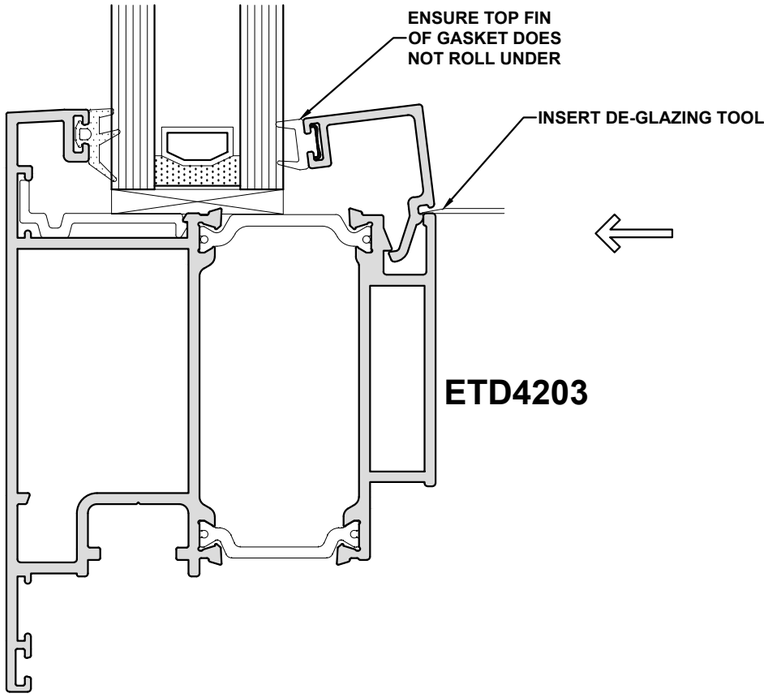

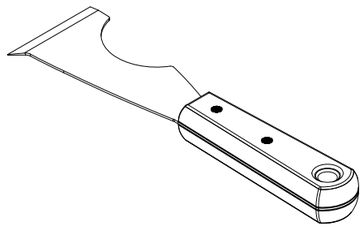

Do Not Scale From This Drawing

Glass Adjuster

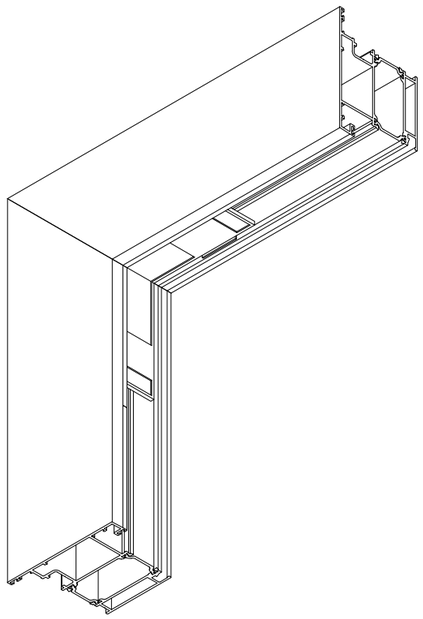

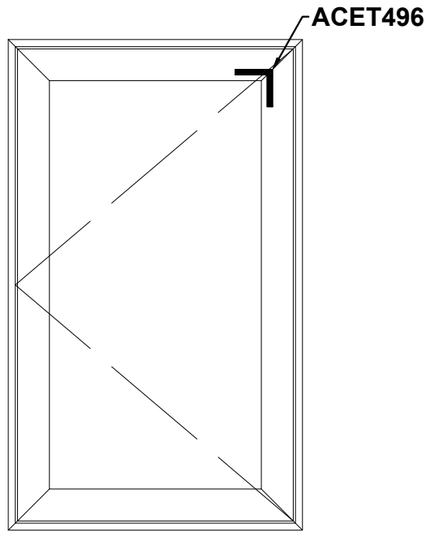

To ensure accuracy use ACET497 drill jig

Note: Do not tighten the adjusting screw too tightly as it can lead to cracked glass.

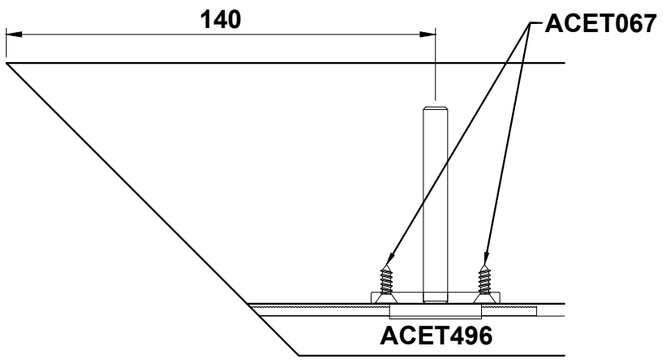

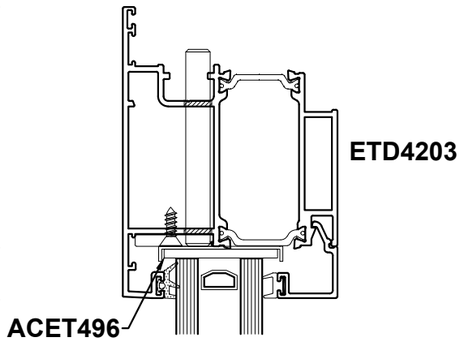

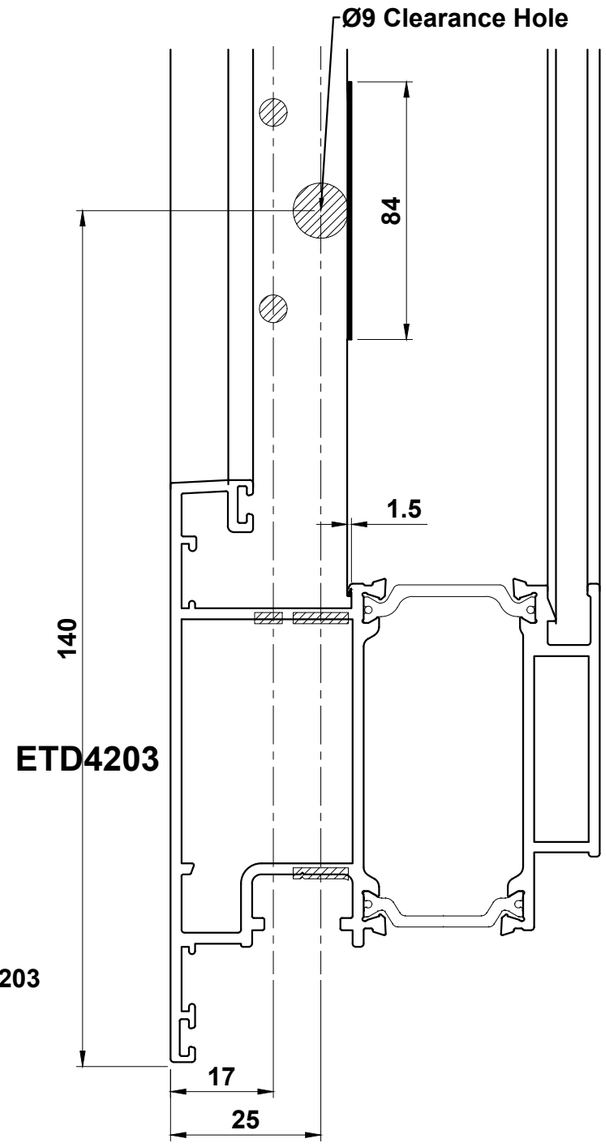

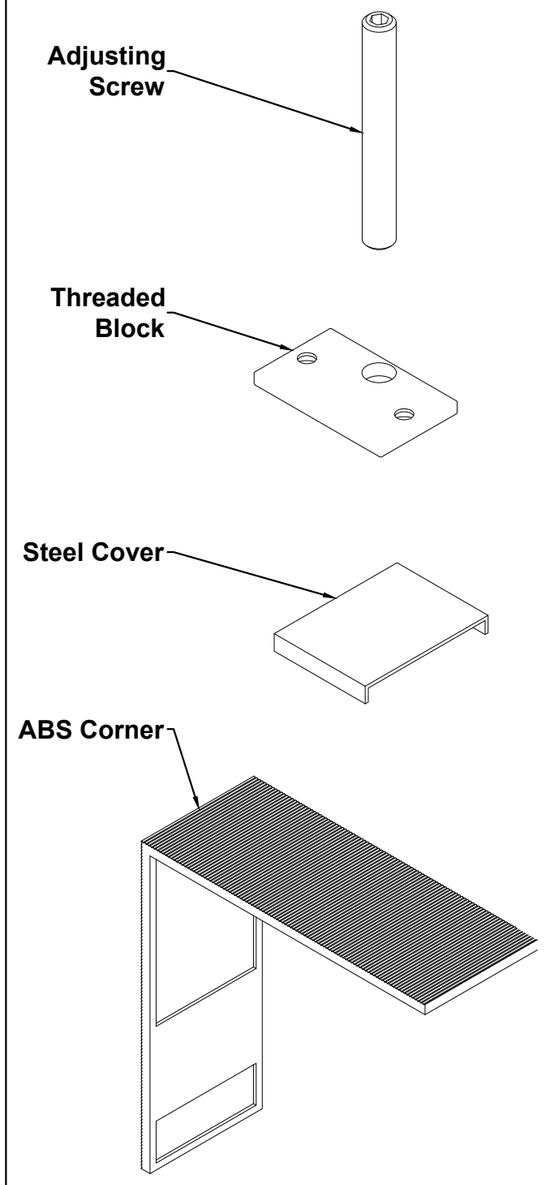

Fixing Strap Detail

Note:
Fixing straps should be spaced a minimum of 150mm in from each end & at a maximum of 300mm apart.

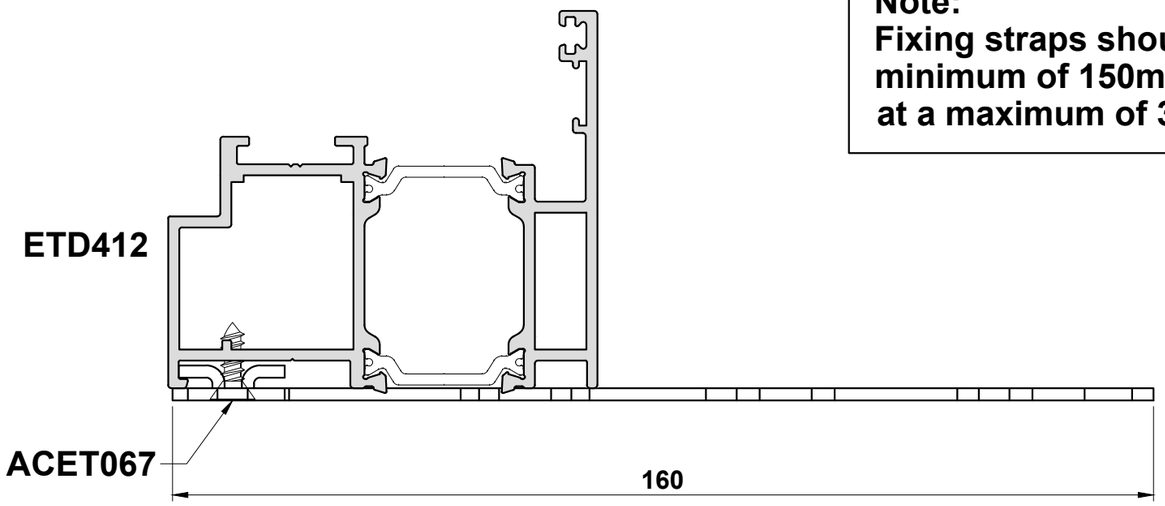

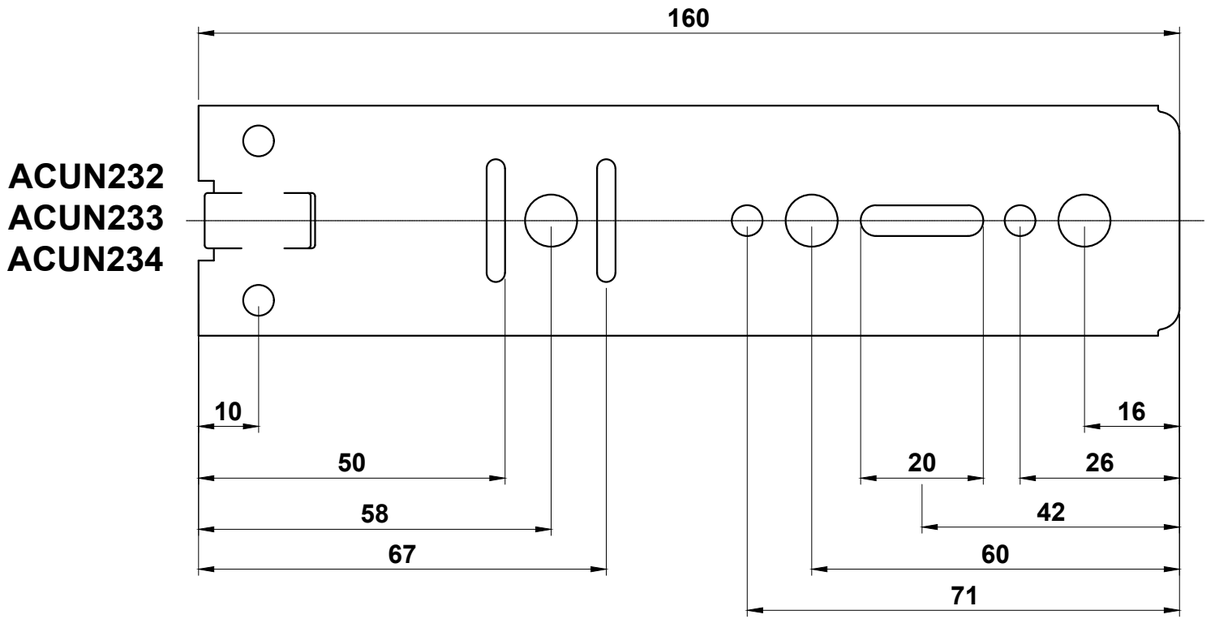

Do Not Scale From This Drawing

Flush Example Layout

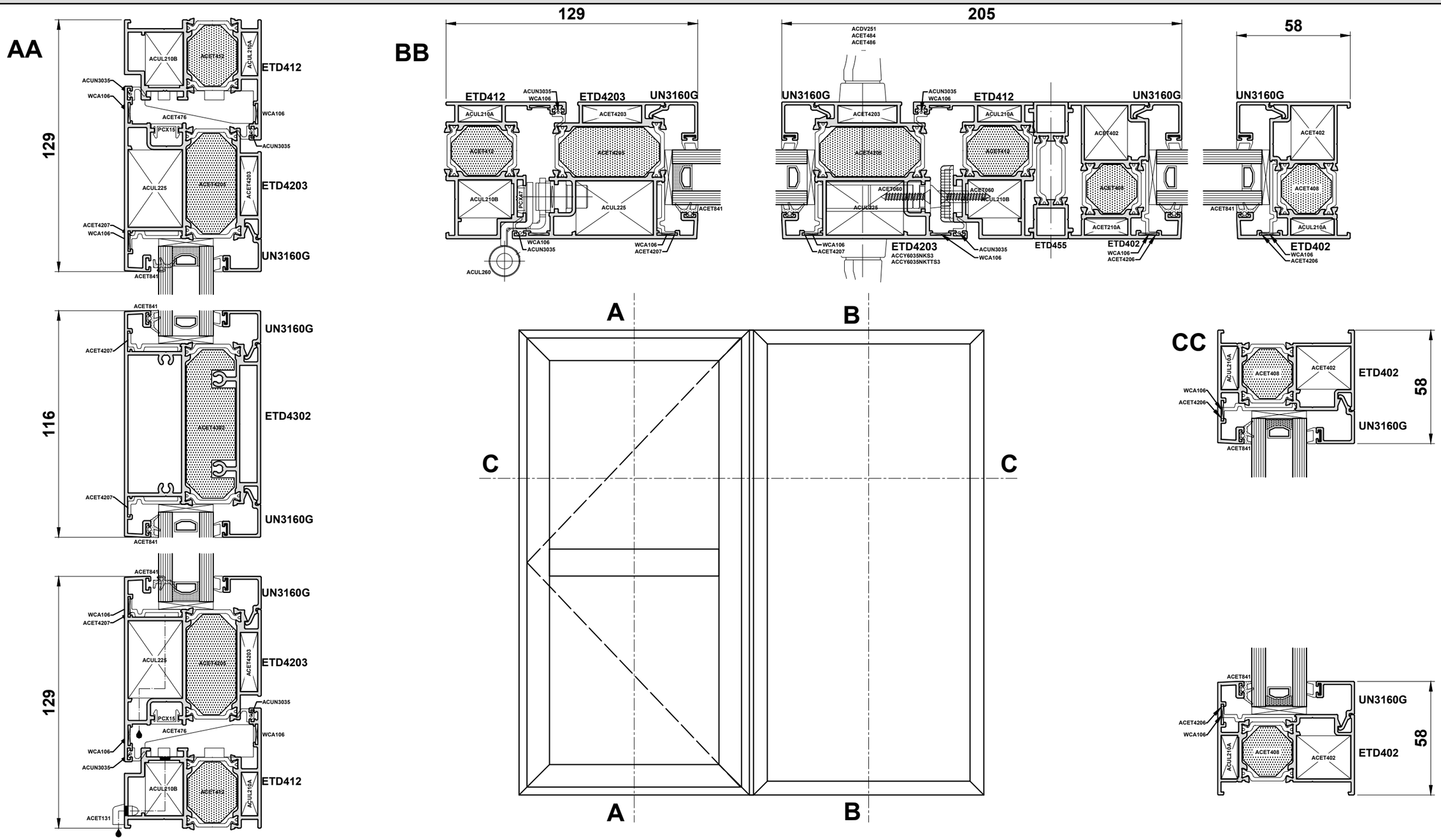

Do Not Scale From This Drawing

ACET149 Fitting Instructions

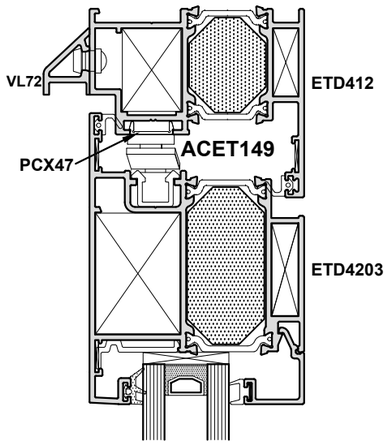

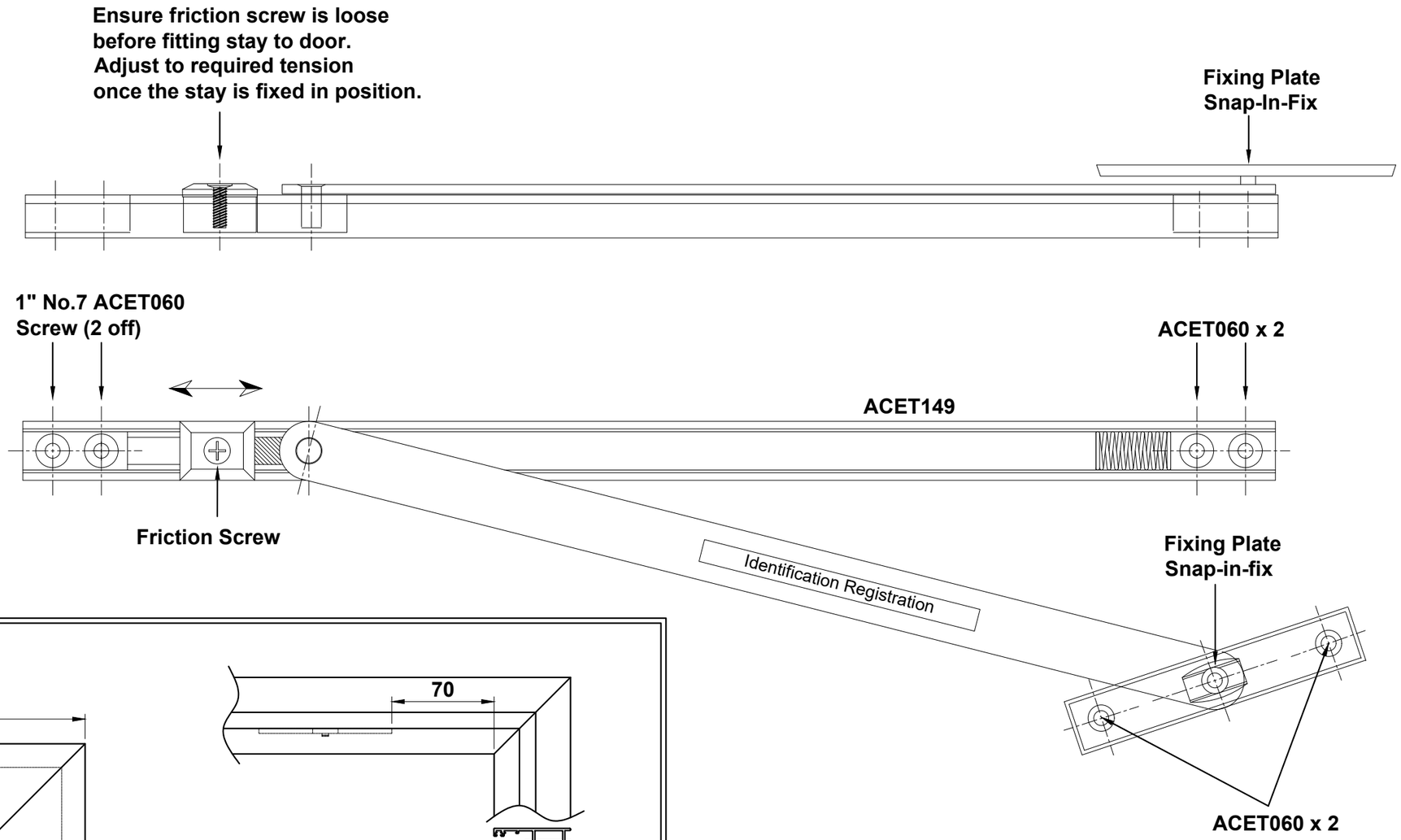

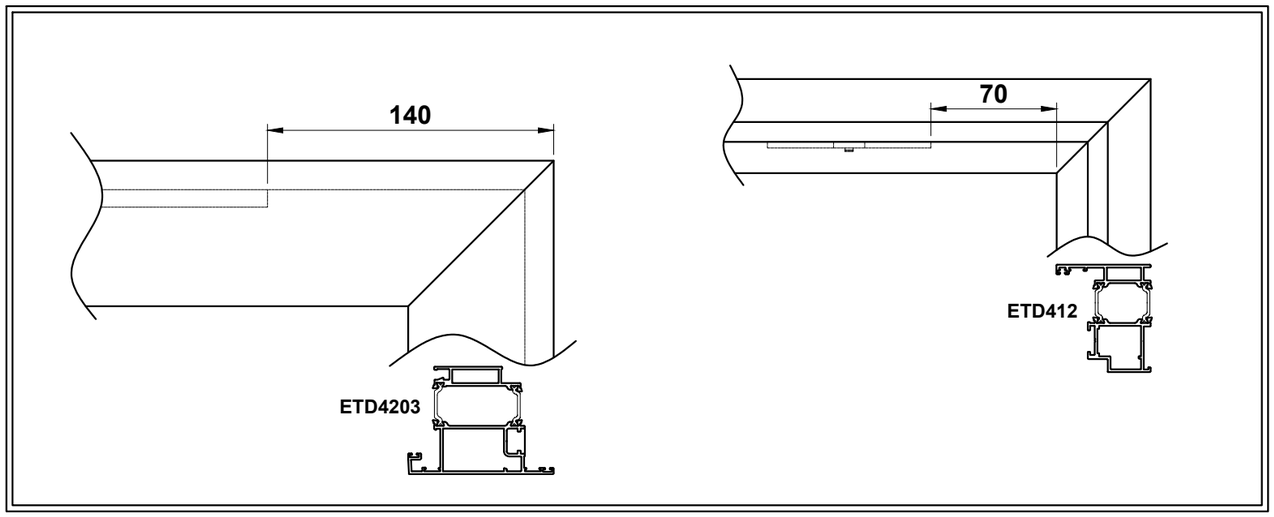

Trickle Vent

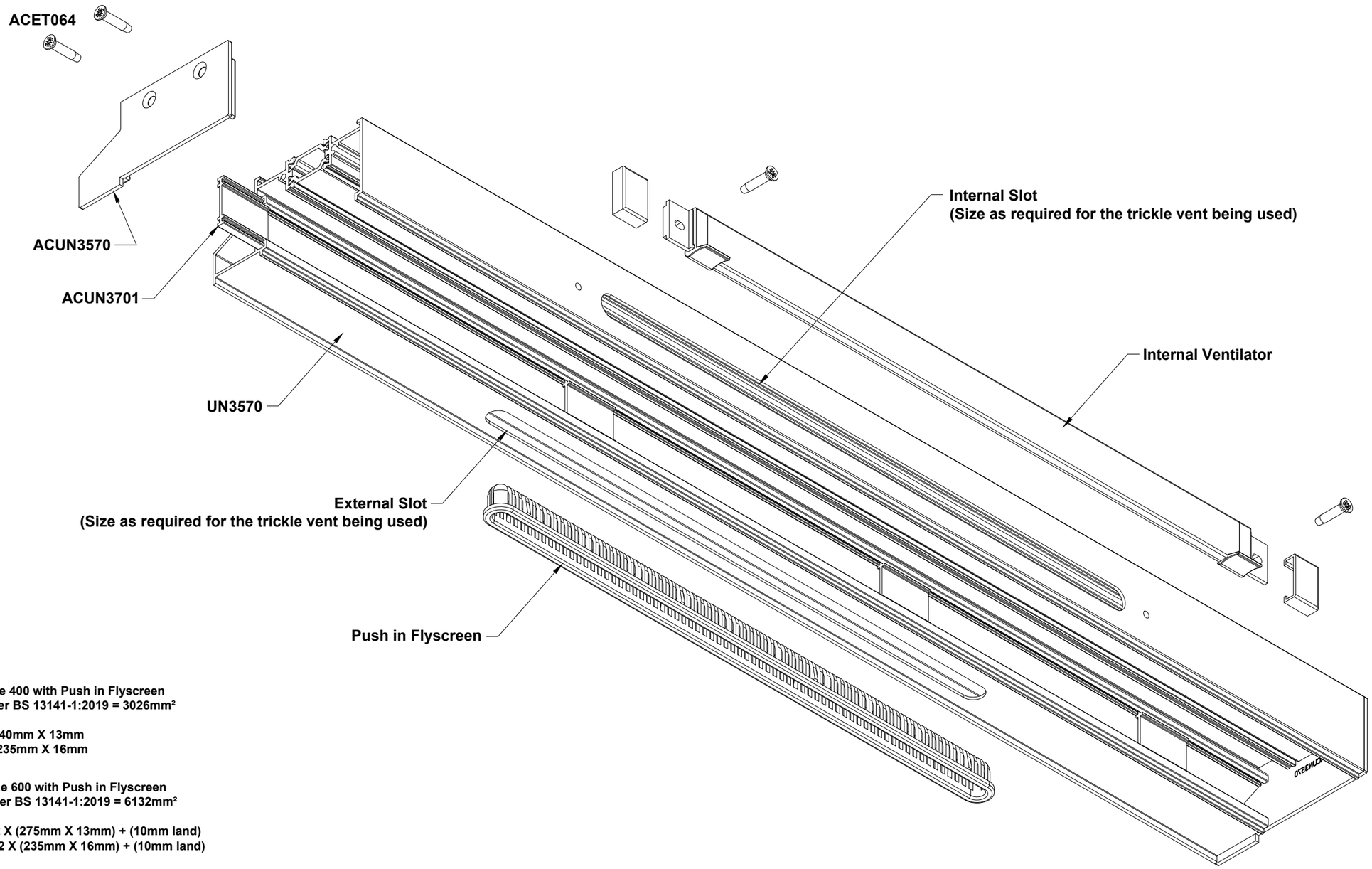

R. W. Simon Sightline 400 with Push in Flyscreen
Equivalent area as per BS 13141-1:2019 = 3026mm²
Length = 400mm
Internal Slot Size = 340mm X 13mm
External Slot Size = 235mm X 16mm

R. W. Simon Sightline 600 with Push in Flyscreen
Equivalent area as per BS 13141-1:2019 = 6132mm²
Length = 600mm
Internal Slot Size = 2 X (275mm X 13mm) + (10mm land)
External Slot Size = 2 X (235mm X 16mm) + (10mm land)

Section F

F ETD

Sawing Tables

Section F

Flush Open In Single Door Full Frame Quick-Glaze Bead

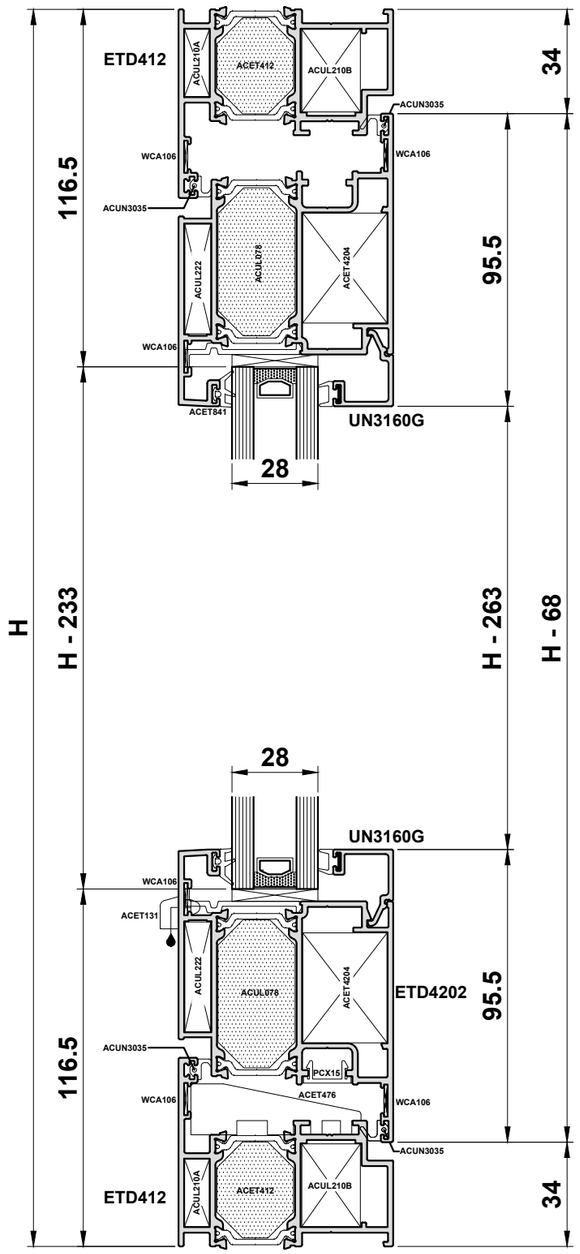

Profile Cutting Schedule		
ETD412	2	W
ETD412	2	H
ETD4202	2	W - 68
ETD4202	2	H - 68
UG3160G	2	H - 263
UG3160G	2	W - 225
PCX15	2	H - 106
PCX15	2	W - 106
PCX47	2	H - 82
PCX47	2	W - 82
VL72	1	W - 149

MIDRAIL		
ETD4301	1	W - 225
UN3160G	4	W - 225
UN3160G	2	H1 - 190
UN3160G	2	H2 - 190

Glass Sizes		
Without ETD4301	H - 233	W - 233
Top Glass With ETD4301	H2 - 161	W - 233
Bottom Glass With ETD4301	H1 - 161	W - 233

Accessories		
ACCY6035S3	1	Euro Cylinder
**	**	Handles
ACET060	16	Screws for Lock
ACET131	2	Drainage Cap
ACET412	2 x W & 2 x H	Outer Frame Foam
ACET476	2	Run Up Block
...	...	Screw for ACUL260
ACUL065	10	Bridge Packers
ACUL078	2 x W & 2 x H	Sash Foam
ACUL210A	4	Outer Frame Cleat
ACUL210B	4	Outer Frame Cleat
ACUL222	4	Sash Cleat
ACET4204	4	Sash Cleat
ACUL260	3	Hinge
ACUN036	2 x W & 2 x H	Wedge Gasket
ACUN3035	4 x W & 4 x H	Flipper Gasket
...	...	Screw for ACUL260
ACET841	2 x W & 2 x H	E Gasket
ACVL059 / ACVL072	1 Pair	VL72 End Cap
ACVL061	W/300 + 2	VL72 Rivet
WCA106	12	Chevrons
*	1	Primary Lock

*See Page E20 for lock options.
**See B & E for handle options.

Midrail Accessories		
ACET841	2 x W	E Gasket
ACUL080	W	ETD4301 Foam
ACUN3512	4	Screws
ACET4206	4	Bridge Packers

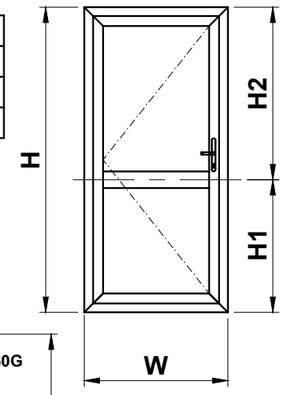

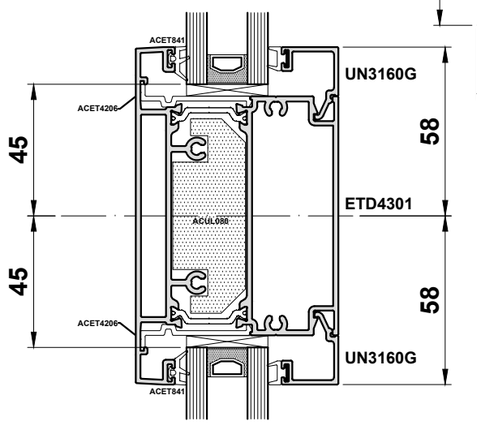

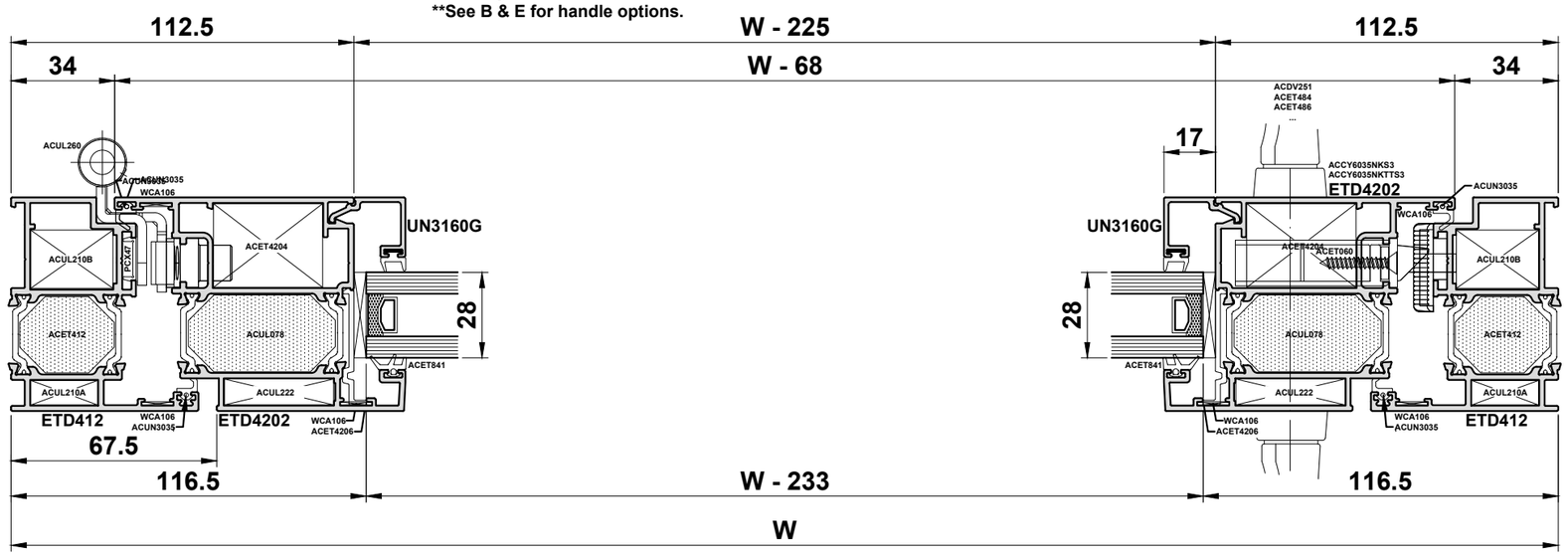

Do Not Scale From This Drawing

Flush Open In Single Door Low Rebate Threshold Quick-Glaze Bead

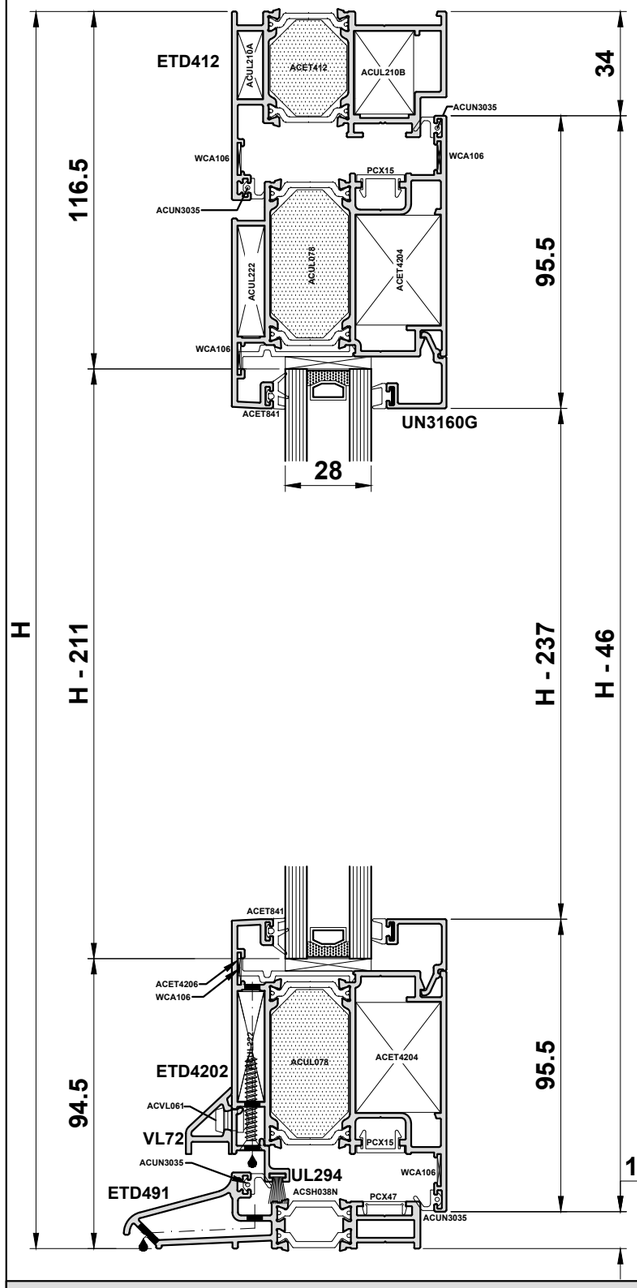

Profile Cutting Schedule				
ETD412	1			W
ETD412	2			H
ETD491	1			W
ETD4202	2			W - 68
ETD4202	2			H - 46
UG3160G	2			H - 263
UG3160G	2			W - 225
UL294	1			W - 139
PCX15	2			H - 106
PCX15	2			W - 106
PCX47	2			H - 56
PCX47	2			W - 82
VL72	1			W - 149
MIDRAIL: ETD4301	1			W - 225
MIDRAIL: UN3160G	4			W - 225
MIDRAIL: UN3160G	2			H1 - 190
MIDRAIL: UN3160G	2			H2 - 190

Glass Sizes		
Without ETD4301	H - 211	W - 233
Top Glass With ETD4301	H2 - 161.5	W - 233
Bottom Glass With ETD4301	H1 - 139.5	W - 233

Accessories		
ACCY6035S3	1	Euro Cylinder
**	**	Handles
ACET060	4	Screw for ACET4190
ACET060	16	Screw for Lock
ACET099	W - 100 / 300	Screw for UL297
ACET4191	Pair	ETD491 End Cap
ACET4197	Pair	UL297 End Cap
ACET476	2	Run Up Block
ACIM062	12	Screw for ACUL250
ACSH038N	W	Woolpile
ACUL4206	10	Bridge Packers
ACUL078	2 x W & 2 X H	Sash Foam
ACUL210A	2	Outer Frame Cleat
ACUL210B	2	Outer Frame Cleat
ACUL222	4	Sash Cleat
ACUL4204	4	Sash Cleat
ACUL260	3	Hinge
ACUL295	2	Low Threshold Bracket
ACUN036	2 x W & 2 x H	Wedge Gasket
ACUN3035	4 x W & 4 x H	Flipper Gasket
ACUN3512	9	Screws for ACUL250
ACET841	2 x W & 2 x H	E Gasket
ACVL059 / ACVL072	1 Pair	VL72 End Cap

Midrail Accessories		
ACET841	2 x W	E Gasket
ACUL080	W	ETD4301 Foam
ACUN3512	4	Screws
ACET4206	4	Bridge Packers

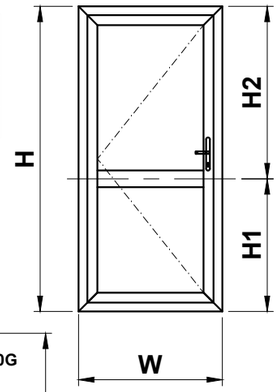

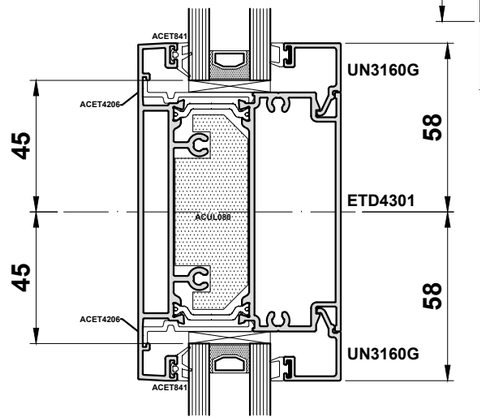

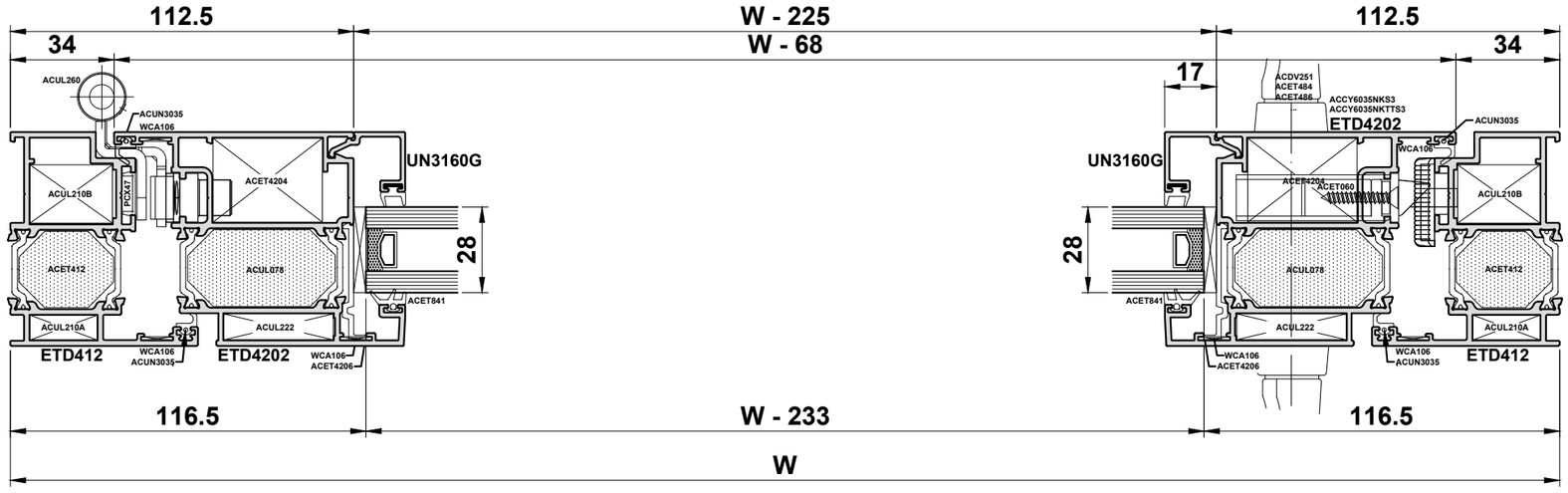

Do Not Scale From This Drawing

Flush Open In Double Door Lift Lever Full Frame Quick-Glaze Bead

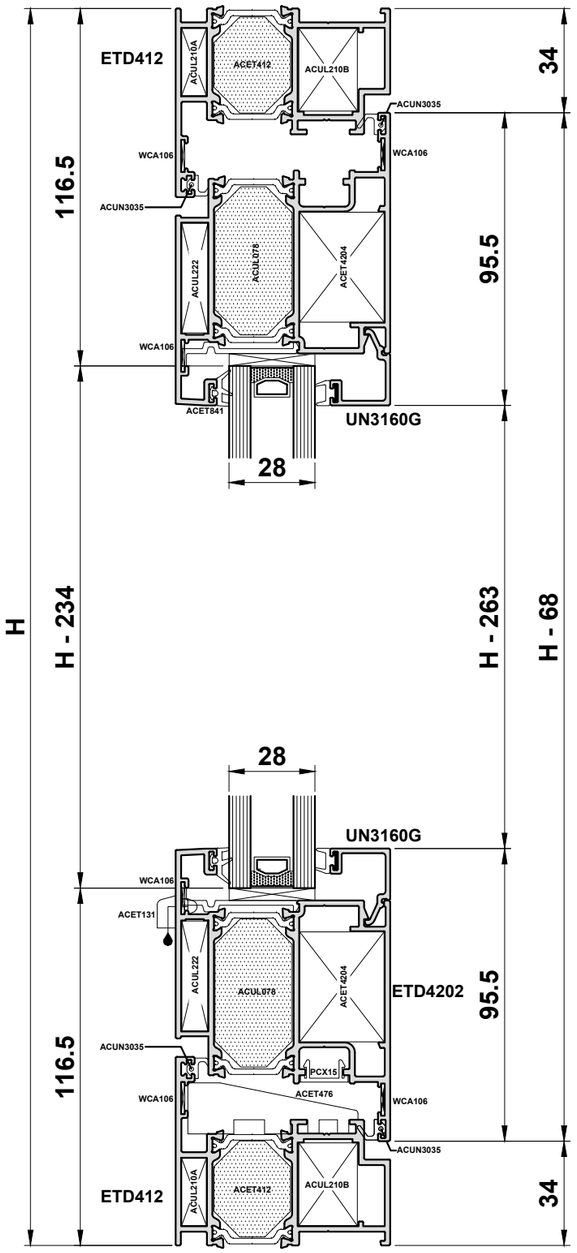

Profile Cutting Schedule		
ETD412	2	W
ETD412	2	H
ETD4202	4	W / 2 - 37
ETD4202	4	H - 68
ETD445	1	H - 110
UN3160G	4	H - 263
UN3160G	4	W / 2 - 194
PCX15	4	H - 106
PCX15	4	W / 2 - 74
PCX47	2	H - 56.5
PCX47	1	H - 110
PCX47	2	W - 82
VL72	2	W / 2 - 117
MIDRAIL: ETD4301	2	W / 2 - 194
MIDRAIL: UN3160G	8	W / 2 - 194
MIDRAIL: UN3160G	4	H2 - 190
MIDRAIL: UN3160G	4	H1 - 190

Glass Sizes		
Without ETD4301	H - 234	W / 2 - 202
Top Glass With ETD4301	H2 - 161	W / 2 - 202
Bottom Glass With ETD4301	H1 - 161	W / 2 - 202

Accessories		
ACCY6035S3	2	Euro Cylinder
ACDV251	2 Pair	Handles
ACDV737	2	Bottom Shootbolt
ACDV738	2	Top Shootbolt
ACET060	40	Screw for Lock & Keep
ACET060	8	Screw for ACDV737/738
ACET131	4	Drainage Cap
ACET412	2 x W & 2 x H	Outer Frame Foam
ACET4157	Pair	ETD445 End Cap
ACET476	4	Run Up Block
...	...	Screw for ACUL260
ACUL065	20	Bridge Packers
ACUL078	4 x W / 2 & 4 x H	Sash Foam
ACUL210A	4	Outer Frame Cleat
ACUL210B	4	Outer Frame Cleat
ACUL222	8	Sash Cleat
ACET4204	8	Sash Cleat
ACUL260	6	Hinge
ACUL276	1	Secondary Lock
ACUL277/8	1	Double Door Primary Lock
ACUL279	1	Double Door Keep Kit
ACUN036	4 x W / 2 & 4 x H	Wedge Gasket
ACUN3035	4 x W & 7 x H	Flipper Gasket
...	...	Screw for ACUL260
ACUN3513	2 + H / 300	Screw for ETD445
ACET841	4 x W / 2 & 4 x H	E Gasket
ACVL072	2 Pairs	VL72 End Cap
ACVL061	W/300 + 2	VL72 Rivet
WCA106	20	Chevrons

Midrail Accessories		
ACUL080	2 x W / 2	ETD4301 Foam
ACUL299	4	Bracket
ACUN036	4 x W / 2	Wedge Gasket
ACUN3512	8	Screw
ACET841	4 x W / 2	E Gasket
ACET4206	8	Bridge Packers

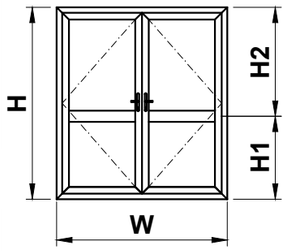

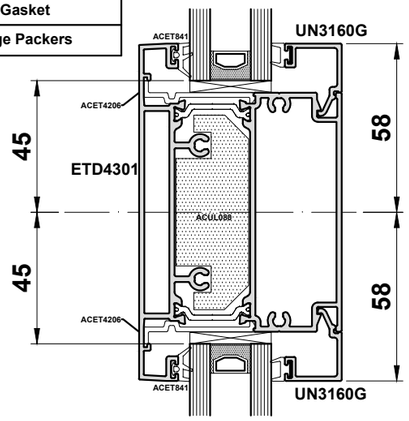

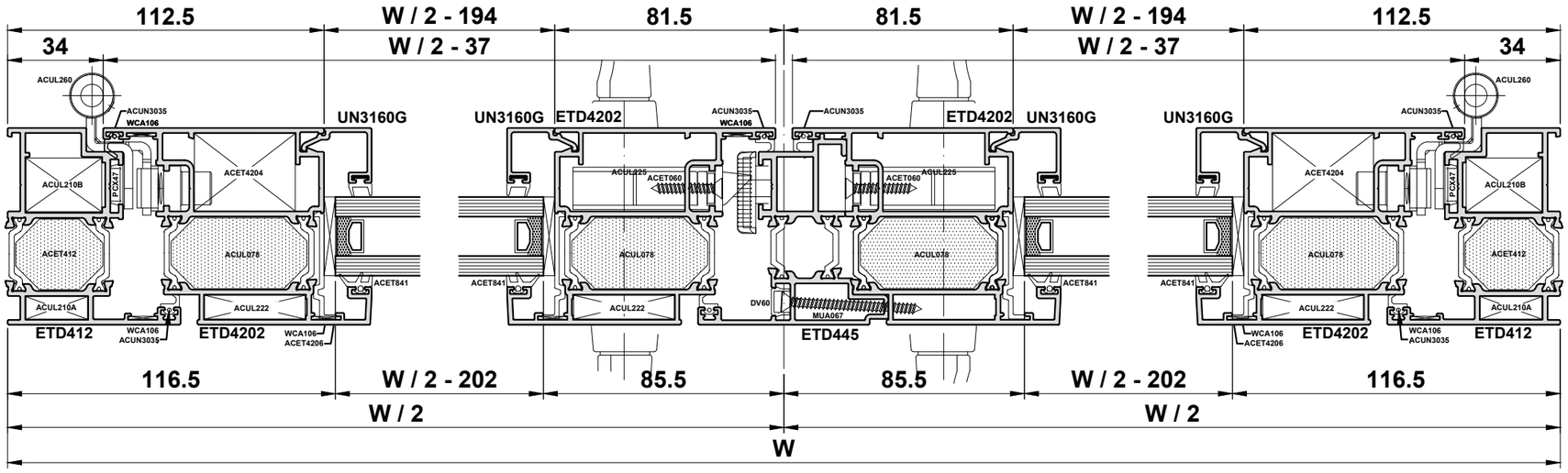

Do Not Scale From This Drawing

Flush Open In Double Door Lift Lever Low Rebate Threshold Quick-Glaze Bead

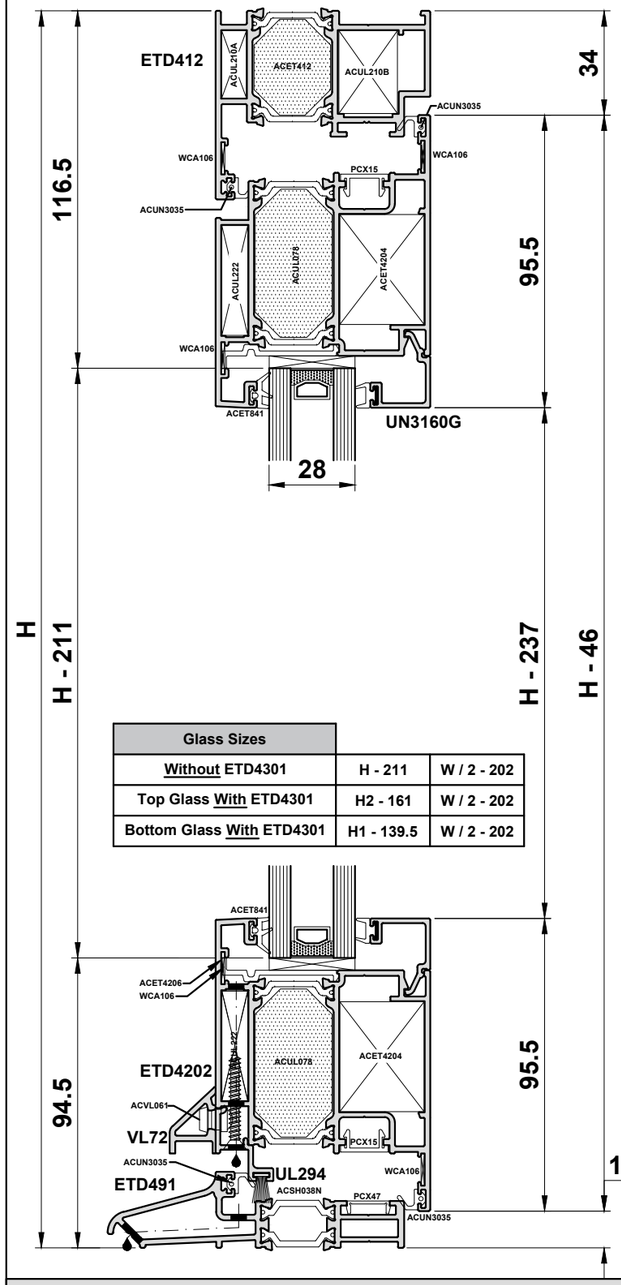

Glass Sizes		
Without ETD4301	H - 211	W / 2 - 202
Top Glass With ETD4301	H2 - 161	W / 2 - 202
Bottom Glass With ETD4301	H1 - 139.5	W / 2 - 202

Profile Cutting Schedule		
ETD412	1	W
ETD412	2	H
ETD491	1	W
ETD4202	4	W / 2 - 37
ETD4202	4	H - 46
ETD445	1	H - 81.5
UN3160G	4	H - 237
UN3160G	4	W / 2 - 194
PCX15	4	H - 81
PCX15	4	W / 2 - 74
PCX47	2	H - 56.5
PCX47	1	H - 81.5
PCX47	2	W - 82
DV60	1	H - 115
UL294	2	W / 2 - 108
VL72	2	W / 2 - 117

MIDRAIL		
ETD4301	2	W / 2 - 194
UN3160G	8	W / 2 - 194
UN3160G	4	H2 - 187.5
UN3160G	4	H1 - 165.5

Accessories		
ACCY6035S3	2	Euro Cylinder
ACDV251	2 Pair	Handles
ACDV737	2	Bottom Shootbolt
ACDV738	2	Top Shootbolt
ACET060	40	Screw for Lock & Keep
ACET060	8	Screw for ACDV737/738
ACET131	4	Drainage Cap
ACET412	2 x W & 2 x H	Outer Frame Foam
ACET4157	Pair	ETD445 End Cap
ACET476	4	Run Up Block
ACET4191	Pair	ETD491 End Cap
ACUL065	20	Bridge Packers
ACUL078	4 x W / 2 & 4 x H	Sash Foam
ACUL210A	2	Outer Frame Cleat
ACUL210B	2	Outer Frame Cleat
ACUL222	8	Sash Cleat
ACET4204	8	Sash Cleat
ACUL260	6	Hinge
ACUL276	1	Secondary Lock
ACUL277/8	1	Double Door Primary Lock
ACUL279	1	Double Door Keep Kit
ACUL295	2	Low Threshold Bracket
ACUN3035	4 x W & 7 x H	Flipper Gasket

ACUN3513	2 + H / 300	Screw for ETD445
ACET841	4 x W / 2 & 4 x H	E Gasket
ACVL072	2 Pairs	VL72 End Cap
ACVL061	W/300 + 2	VL72 Rivet
WCA106	20	Chevrons

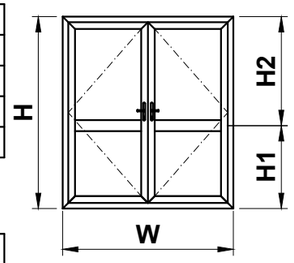

Midrail Accessories		
ACUL080	2 x W / 2	ETD4301 Foam
ACUL299	4	Bracket
ACUN3512	8	Screw
ACET841	4 x W / 2	E Gasket
ACET4206	8	Bridge Packers

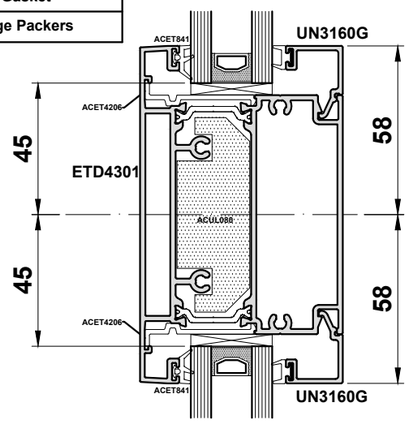

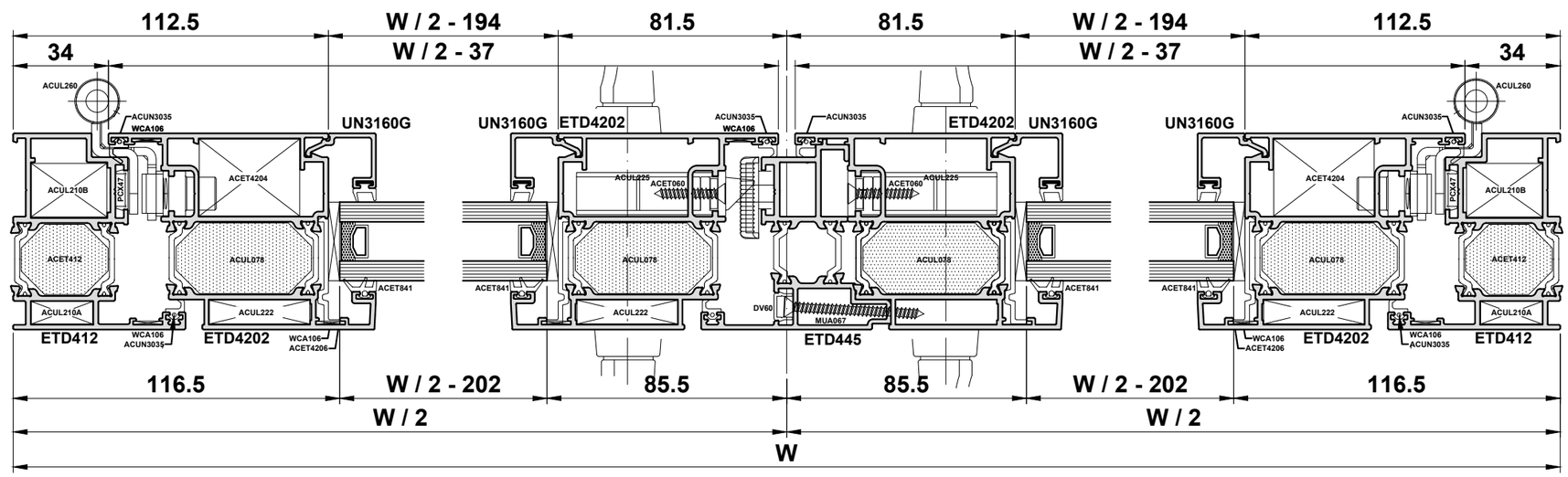

Do Not Scale From This Drawing

Flush Open In Double Door Lift Lever Low Ramp Threshold Quick-Glaze Bead

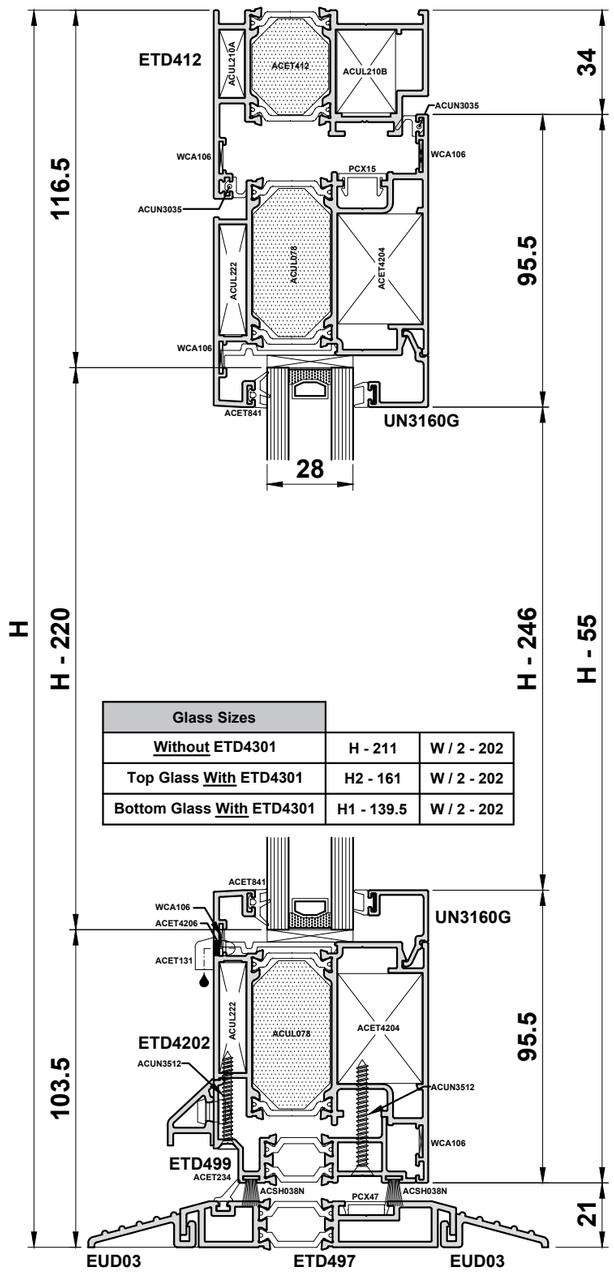

Glass Sizes		
Without ETD4301	H - 211	W / 2 - 202
Top Glass With ETD4301	H2 - 161	W / 2 - 202
Bottom Glass With ETD4301	H1 - 139.5	W / 2 - 202

Profile Cutting Schedule		
ETD412	1	W
ETD412	2	H - 15
ETD497	1	W
EUD03	2	W
ETD4202	4	W / 2 - 37
ETD4202	4	H - 55
ETD445	1	H - 81
ETD499	2	W / 2 - 108
UN3160G	4	H - 220
UN3160G	4	W / 2 - 194
PCX15	4	H - 84.5
PCX15	4	W / 2 - 74
PCX47	2	H - 56
PCX47	1	H - 81
PCX47	2	W - 82
DV60	1	H - 124
VL72	2	W / 2 - 117

MIDRAIL		
ETD4301	2	W / 2 - 194
UN3160G	8	W / 2 - 194
UN3160G	4	H2 - 187.5
UN3160G	4	H1 - 165.5

Accessories		
ACCY6035S3	2	Euro Cylinder
ACDV251	2 Pair	Handles
ACDV737	2	Bottom Shootbolt
ACDV738	2	Top Shootbolt
ACET060	40	Screw for Lock & Keep
ACET060	8	Screw for ACDV737/738
ACET131	4	Drainage Cap
ACET412	2 x W & 2 x H	Outer Frame Foam
ACET4153	Pair	ETD445 End Cap
ACET476	4	Run Up Block
ACET4198	Pair	ETD497 End Cap
ACUL065	20	Bridge Packers
ACUL078	4 x W / 2 & 4 x H	Sash Foam
ACUL210A	2	Outer Frame Cleat
ACUL210B	2	Outer Frame Cleat
ACUL222	8	Sash Cleat
ACET4204	8	Sash Cleat
ACUL260	6	Hinge
ACUL276	1	Secondary Lock
ACUL277/8	1	Double Door Primary Lock
ACUL279	1	Double Door Keep Kit
ACUL295	2	Low Threshold Bracket
ACUN3035	4 x W & 7 x H	Flipper Gasket

ACUN3513	2 + H / 300	Screw for ETD445
ACET841	4 x W / 2 & 4 x H	E Gasket
ACVL072	2 Pairs	VL72 End Cap
ACVL061	W/300 + 2	VL72 Rivet
WCA106	20	Chevrons

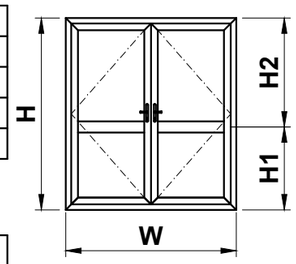

Midrail Accessories		
ACUL080	2 x W / 2	ETD4301 Foam
ACUL299	4	Bracket
ACUN3512	8	Screw
ACET841	4 x W / 2	E Gasket
ACET4206	8	Bridge Packers

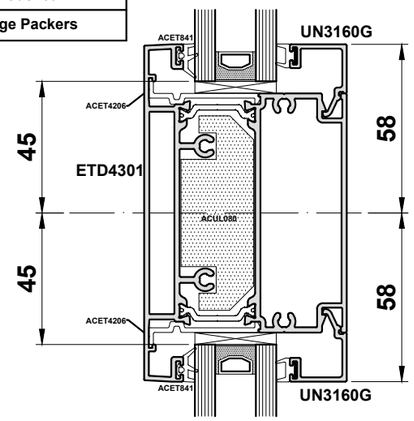

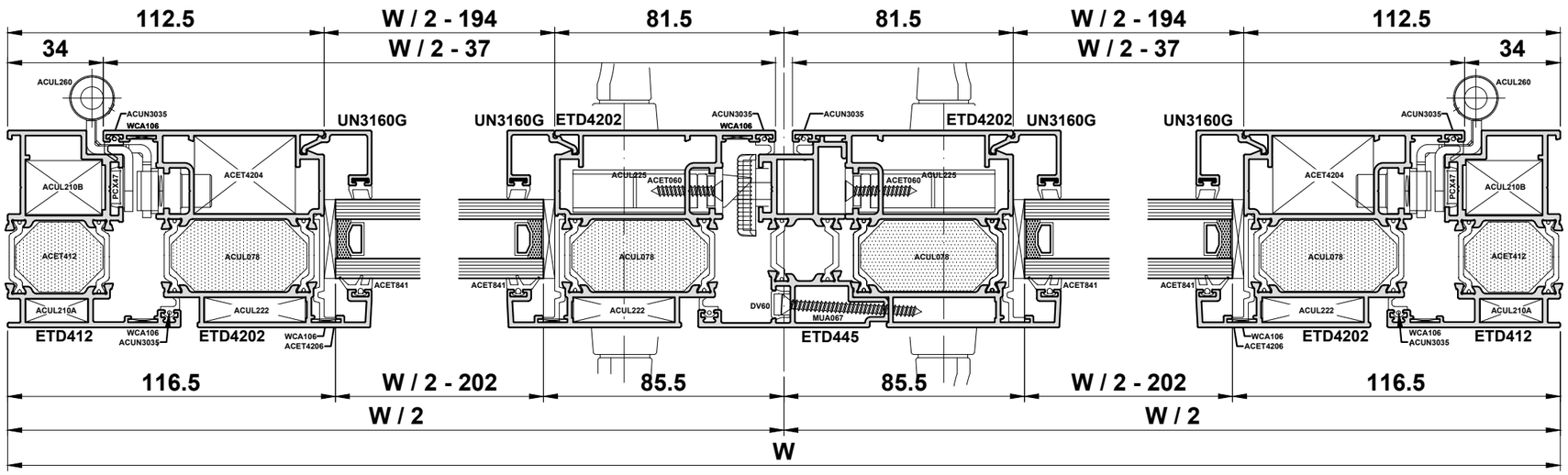

Do Not Scale From This Drawing

Flush Open In Double Door Finger Bolt Full Frame Quick-Glaze Bead

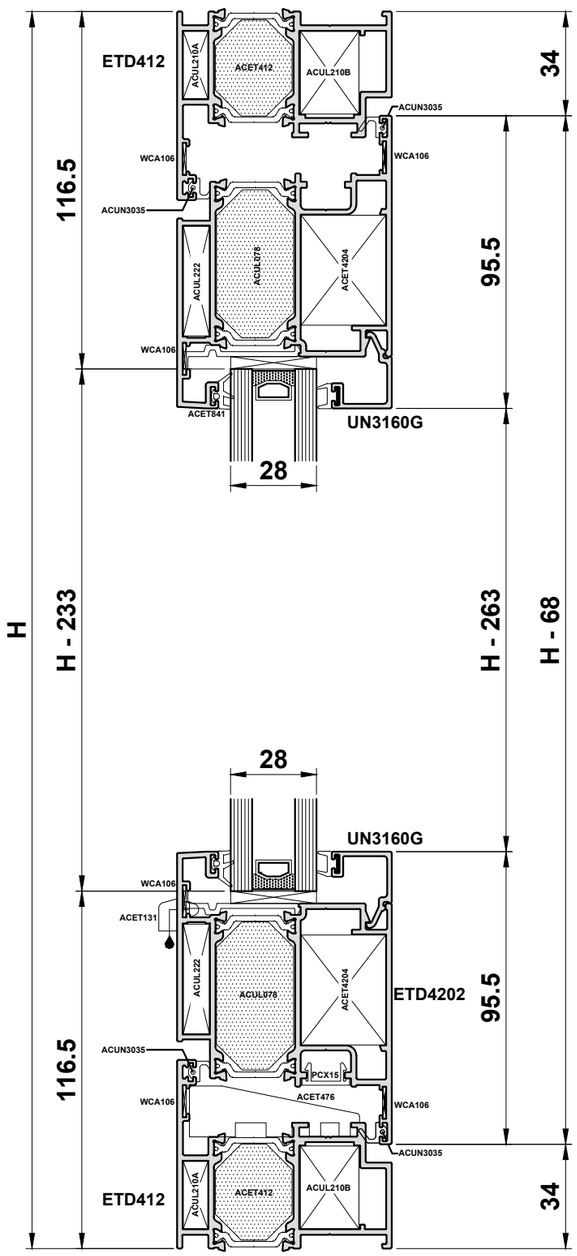

Profile Cutting Schedule			
ETD412	2		W
ETD412	2		H
ETD4202	4		W / 2 - 40
ETD4202	4		H - 68
ETD446	1		H - 110
UG3160G	4		H - 263
UG3160G	4		W / 2 - 197
PCX15	4		H - 106
PCX15	4		W / 2 - 58
PCX47	2		H - 82
PCX47	1		H - 110
PCX47	2		W - 82
VL72	2		W / 2 - 120
MIDRAIL: ETD4301	1		W / 2 - 197
MIDRAIL: UN3160G	4		W / 2 - 197
MIDRAIL: UN3160G	2		H1 - 187.5
MIDRAIL: UN3160G	2		H2 - 187.5

Glass Sizes		
Without ETD4301	H - 233	W / 2 - 205
Top Glass With ETD4301	H2 - 161.5	W / 2 - 205
Bottom Glass With ETD4301	H1 - 161.5	W / 2 - 205

Accessories		
ACCY6035S3	1	Euro Cylinder
**	**	Handles
ACET060	16	Screw for Lock
ACET131	4	Drainage Cap
ACET402	2 x W & 2 x H	Outer Frame Foam
ACET4158	Pair	ETD446 End Cap
ACET476	4	Run Up Block
...	...	Screw for ACUL260
ACPD844	1	Shootbolt Adaptor
ACPD84..	2	10mm Dia Glavanised Rod
ACSM015	Pair	Escutcheon
ACUL065	20	Bridge Packers
ACUL078	4 x W / 2 & 4 x H	Sash Foam
ACUL210A	4	Outer Frame Cleat
ACUL210B	4	Outer Frame Cleat
ACUL222	8	Sash Cleat
ACUL225	8	Sash Cleat
ACUL242	2	Finger Bolt Guide
ACUL260	6	Hinge
ACUL390	Pair	Finger Bolt Flat Keep
ACUN036	4 x W / 2 & 4 x H	Wedge Gasket
ACUN3035	4 x W & 6 x H	Flipper Gasket
...	...	Screw for ACUL260
ACUN3513	2 + H / 300	Screw for ETD446
ACET841	4 x W / 2 & 4 x H	E Gasket
ACVL072	2 Pairs	VL72 End Cap
ACVL061	W/300 + 2	VL72 Rivet
WCA106	20	Chevron
*	1	Double Door Primary Lock

*See Page E20 for lock options.
**See B & E for handle options.

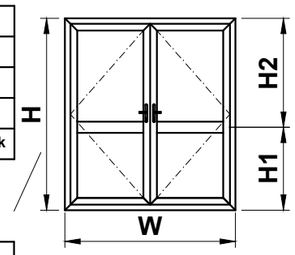

Midrail Accessories		
ACUL080	2 x W / 2	ETD4301 Foam
ACUL299	4	Bracket
ACUN036	4 x W / 2	Wedge Gasket
ACUN3512	8	Screw
ACET841	4 x W / 2	E Gasket
ACET4206	8	Bridge Packers

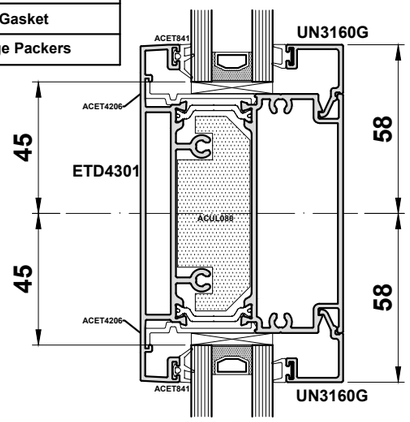

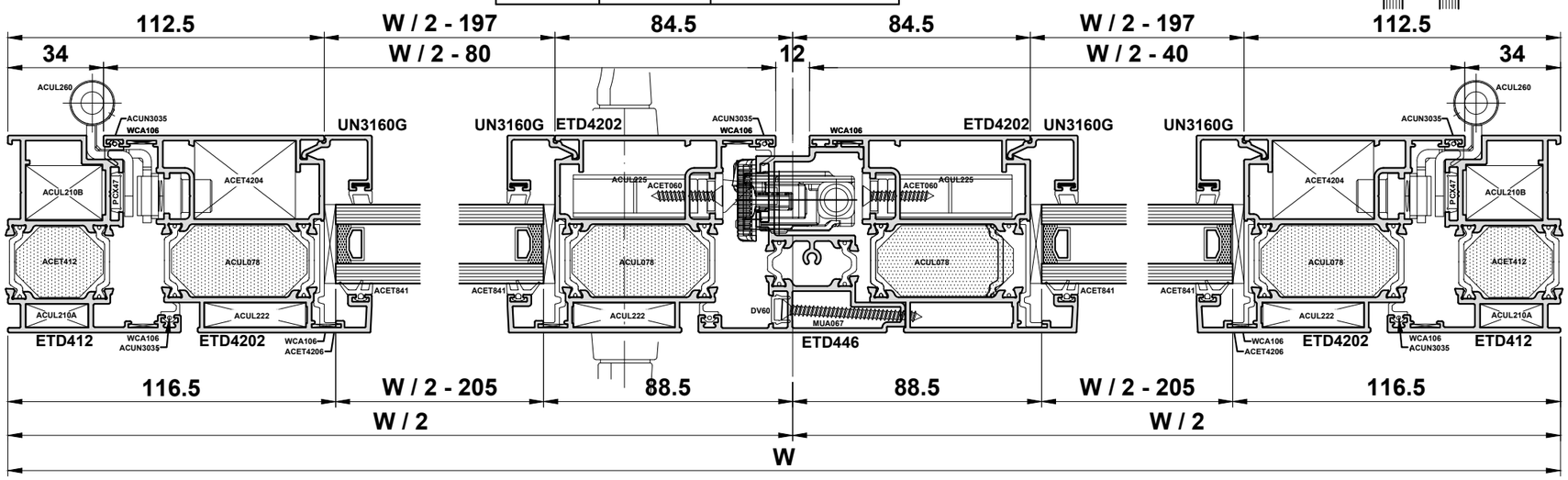

Do Not Scale From This Drawing

Flush Open In Double Door Finger Bolt Low Rebate Threshold Quick-Glaze Bead

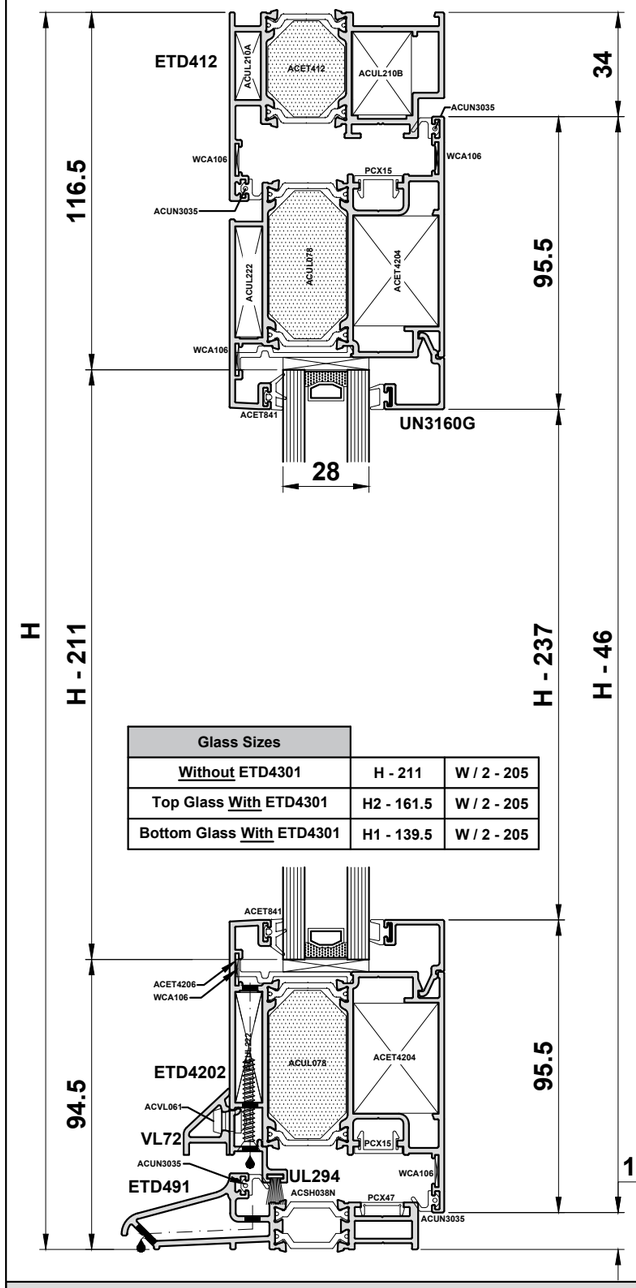

Glass Sizes		
Without ETD4301	H - 211	W / 2 - 205
Top Glass With ETD4301	H2 - 161.5	W / 2 - 205
Bottom Glass With ETD4301	H1 - 139.5	W / 2 - 205

Profile Cutting Schedule		
ETD412	1	W
ETD412	2	H
ETD491	1	W
ETD4202	4	W / 2 - 40
ETD4202	4	H - 46
ETD446	1	H - 81.5
UG3160G	4	H - 237
UG3160G	4	W / 2 - 197
PCX15	4	H - 84.5
PCX15	4	W / 2 - 58
PCX47	2	W - 82
PCX47	2	H - 56.5
PCX47	1	H - 81.5
DV60	1	H - 115
UL294	2	W / 2 - 108
VL72	2	W / 2 - 120

MIDRAIL		
ETD4301	1	W / 2 - 197
UN3160G	4	W / 2 - 197
UN3160G	2	H1 - 165.5
UN3160G	2	H2 - 187.5

Accessories		
ACCY6035S3	1	Euro Cylinder
**	**	Handles
ACET060	16	Screw for Lock
ACET131	4	Drainage Cap
ACET402	2 x W & 2 x H	Outer Frame Foam
ACET4158	Pair	ETD446 End Cap
ACET476	4	Run Up Block
ACET4191	Pair	ETD491 End Cap
ACPD844	1	Shootbolt Adaptor
ACPD84..	2	10mm Dia Glavanised Rod
ACSM015	Pair	Escutcheon
ACUL065	20	Bridge Packers
ACUL078	4 x W / 2 & 4 x H	Sash Foam
ACUL210A	2	Outer Frame Cleat
ACUL210B	2	Outer Frame Cleat
ACUL222	8	Sash Cleat
ACET4204	8	Sash Cleat
ACUL242	2	Finger Bolt Guide
ACUL260	6	Hinge
ACUL295	2	Low Threshold Bracket
ACUL390	Pair	Finger Bolt Flat Keep
ACUN3035	4 x W & 6 x H	Flipper Gasket
...	...	Screw for ACUL260

ACUN3513	2 + H / 300	Screw for ETD446
ACET841	4 x W / 2 & 4 x H	E Gasket
ACVL059 / ACVL072	2 Pairs	VL72 End Cap
ACVL061	W/300 + 2	VL72 Rivet
WCA106	20	Chevron
*	1	Double Door Primary Lock

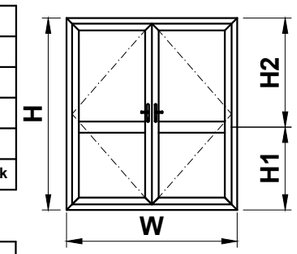

Midrail Accessories		
ACUL080	2 x W / 2	ETD4301 Foam
ACUL299	4	Bracket
ACUN3512	8	Screw
ACET841	4 x W / 2	E Gasket
ACET4206	8	Bridge Packers

*See Page E20 for lock options.
**See B & E for handle options.

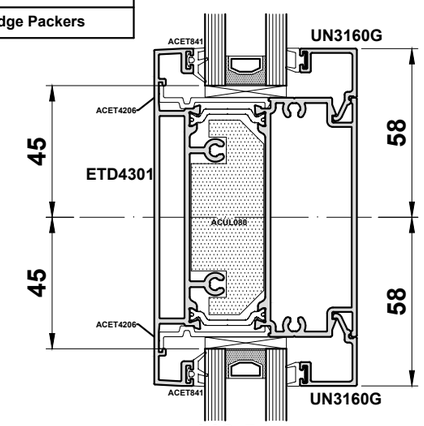

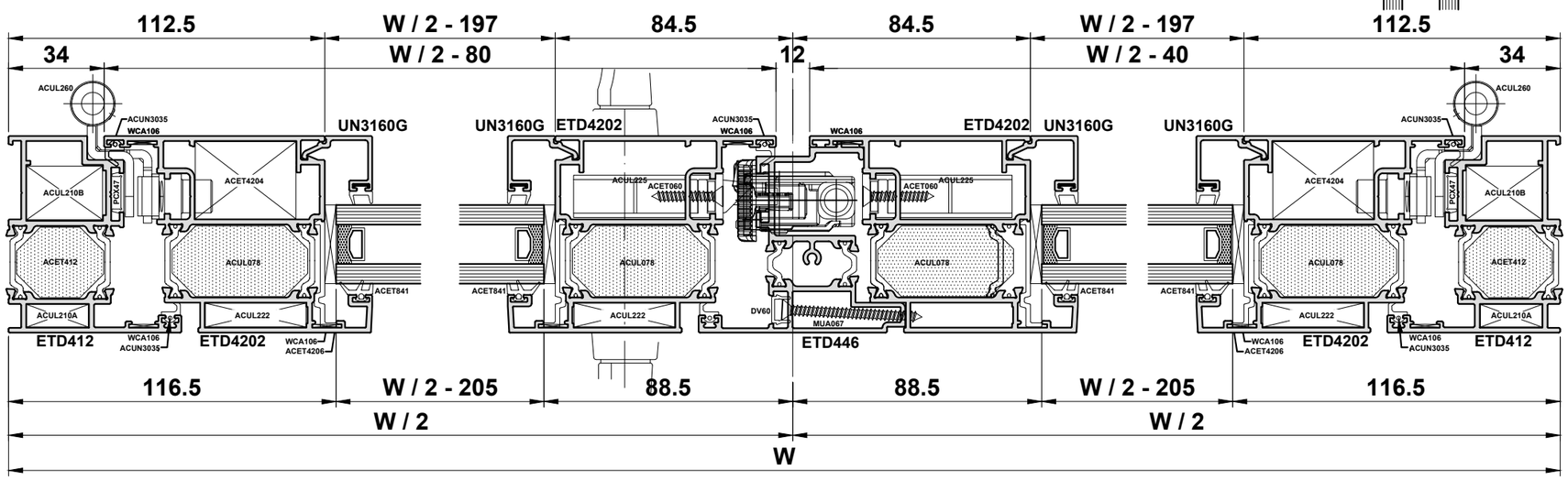

Do Not Scale From This Drawing

Flush Open In Double Door Finger Bolt Low Ramp Threshold Quick-Glaze Bead

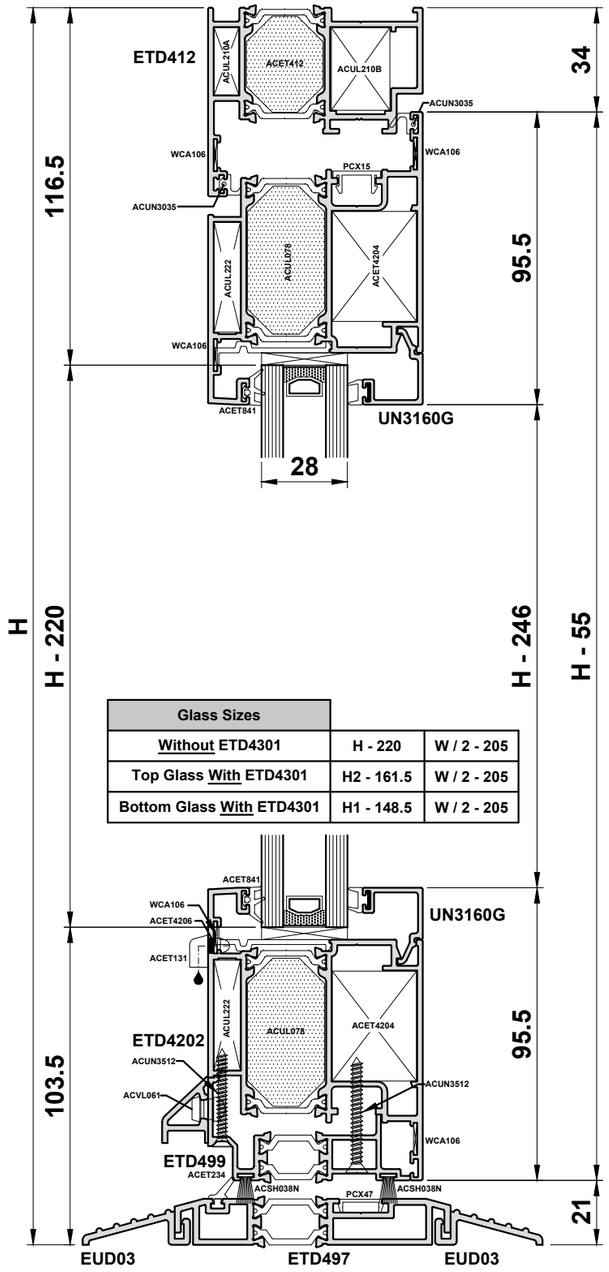

Glass Sizes		
Without ETD4301	H - 220	W / 2 - 205
Top Glass With ETD4301	H2 - 161.5	W / 2 - 205
Bottom Glass With ETD4301	H1 - 148.5	W / 2 - 205

Profile Cutting Schedule		
ETD412	1	W
ETD412	2	H - 15
ETD497	1	W
EUD03	2	W
ETD4202	4	W / 2 - 40
ETD4202	4	H - 55
ETD446	1	H - 81
ETD499	2	W / 2 - 111
UG3160G	4	H - 246
UG3160G	4	W / 2 - 197
PCX15	4	H - 81
PCX15	2	W / 2 - 58
PCX47	2	W - 82
PCX47	2	H - 56.5
PCX47	1	H - 81
DV60	1	H - 121
VL72	2	W / 2 - 120

MIDRAIL		
ETD4301	1	W / 2 - 197
UN3160G	4	W / 2 - 197
UN3160G	2	H1 - 174.5
UN3160G	2	H2 - 187.5

Accessories		
ACCY6035S3	1	Euro Cylinder
**	**	Handles
ACET060	16	Screw for Lock
ACET131	4	Drainage Cap
ACET402	2 x W & 2 x H	Outer Frame Foam
ACET4153	Pair	ETD446 End Cap
ACET476	4	Run Up Block
ACET4198	Pair	ETD497 End Cap
ACPD844	1	Shootbolt Adaptor
ACPD84..	2	10mm Dia Glavanised Rod
ACSM015	Pair	Escutcheon
ACUL065	20	Bridge Packers
ACUL078	4 x W / 2 & 4 x H	Sash Foam
ACUL210A	2	Outer Frame Cleat
ACUL210B	2	Outer Frame Cleat
ACUL222	8	Sash Cleat
ACET4204	8	Sash Cleat
ACUL242	2	Finger Bolt Guide
ACUL260	6	Hinge
ACUL295	2	Low Threshold Bracket
ACUL390	Pair	Finger Bolt Flat Keep
ACUN3035	4 x W & 6 x H	Flipper Gasket
...	...	Screw for ACUL260

ACUN3513	2 + H / 300	Screw for ETD446
ACET841	4 x W / 2 & 4 x H	E Gasket
ACVL059 / ACVL072	2 Pairs	VL72 End Cap
ACVL061	W/300 + 2	VL72 Rivet
WCA106	20	Chevron
*	1	Double Door Primary Lock

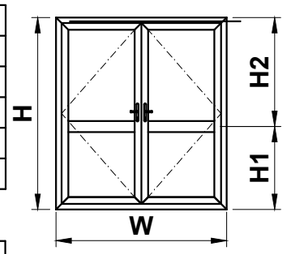

Midrail Accessories		
ACUL080	2 x W / 2	ETD4301 Foam
ACUL299	4	Bracket
ACUN3512	8	Screw
ACET841	4 x W / 2	E Gasket
ACET4206	8	Bridge Packers

*See Page E20 for lock options.
**See B & E for handle options.

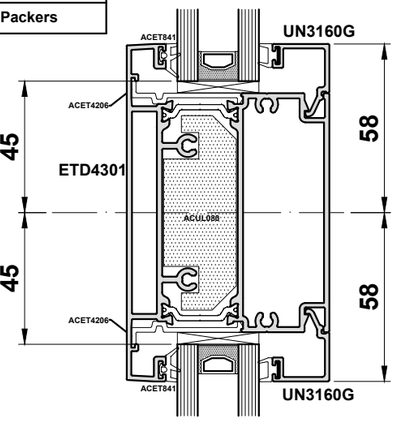

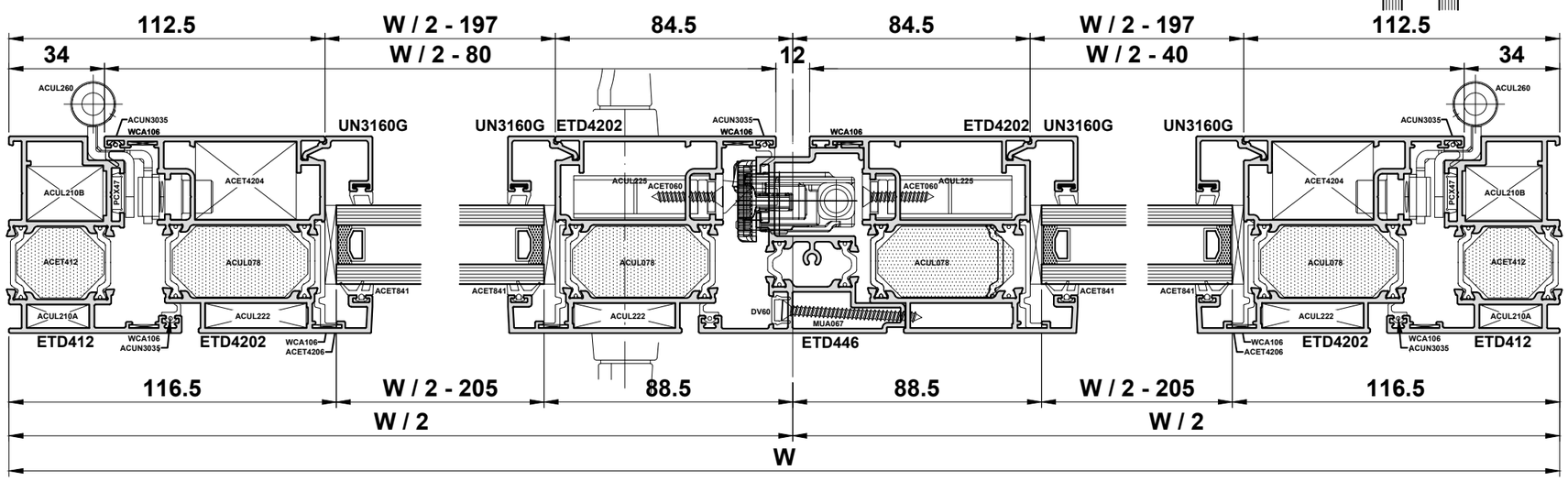

Do Not Scale From This Drawing

Flush Open Out Flush Single Door Full Frame Quick-Glaze Bead

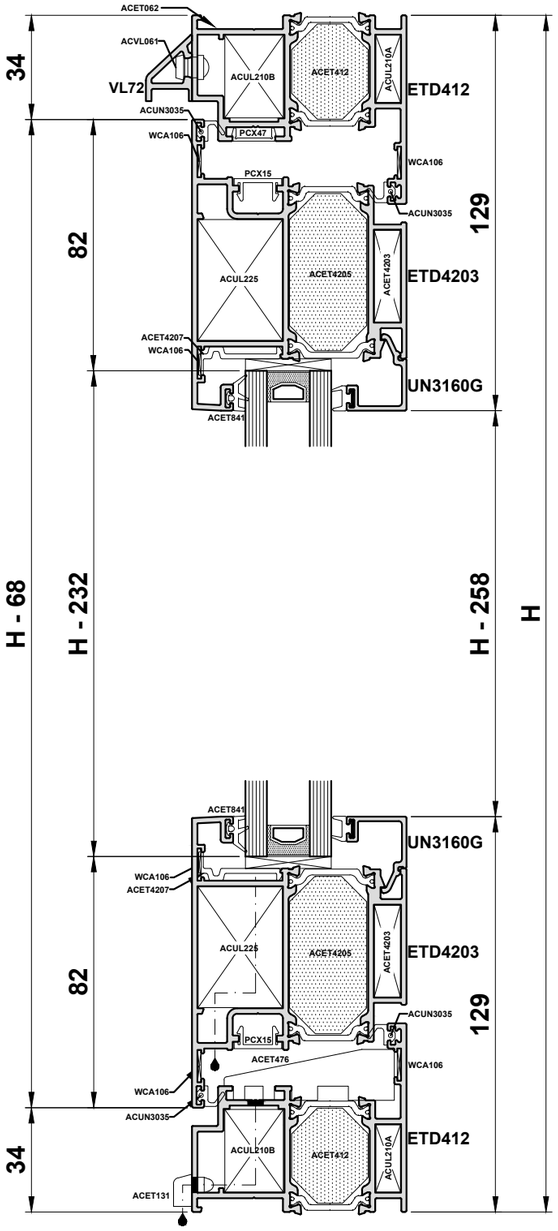

Profile Cutting Schedule		
UN3160G	2	H - 258
UN3160G	2	W - 224
ETD412	2	W
ETD412	2	H
ETD4203	2	W - 68
ETD4203	2	H - 68
PCX15	2	H - 106
PCX15	2	W - 106
PCX47	2	H - 82
PCX47	2	W - 82
VL72	1	W - 11

MIDRAIL		
ETD4302	1	W - 224
UN3160G	4	W - 224
UN3160G	2	H1 - 187
UN3160G	2	H2 - 187

Glass Sizes		
Without ETD4302	H - 232	W - 232
Top Glass With ETD4302	H2 - 161	W - 232
Bottom Glass With ETD4302	H1 - 161	W - 232

Accessories		
ACCY3560S3	1	Euro Cylinder
**	**	Handles
ACET060	16	Screws for Lock
ACET131	2	Drainage Cap
ACET412	2 x W & 2 x H	Outer Frame Foam
ACET4203	4	Sash Cleat
ACET4205	2 x W & 2 X H	Sash Foam
ACET4207	10	Bridge Packers
ACET476	2	Run Up Block
ACET841	2 x W & 2 x H	E Gasket
...	...	Screw for ACUL260
ACUL210A	4	Outer Frame Cleat
ACUL210B	4	Outer Frame Cleat
ACUL225	4	Sash Cleat
ACUL260	3	Hinge
ACUN3035	4 x W & 4 x H	Flipper Gasket
...	...	Screw for ACUL260
ACVL059 / ACVL072	1 Pair	VL72 End Cap
ACVL061	W/300 + 2	VL72 Rivet
WCA106	12	Chevrons
*	1	Primary Lock

*See Page E72 for lock options.
**See B & E for handle options.

Midrail Accessories		
ACET4302	W	ETD4302 Foam
ACUN3512	4	Screws
ACET841	2 x W	E Gasket
ACET4207	4	Bridge Packer

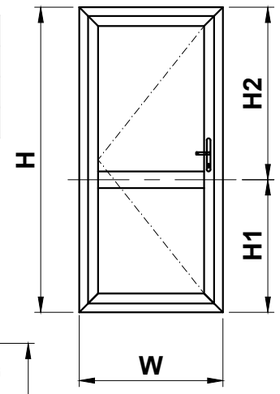

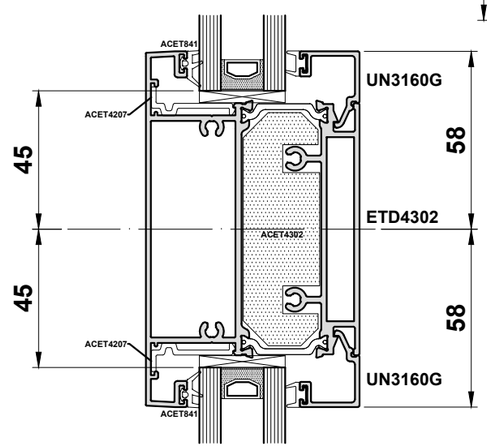

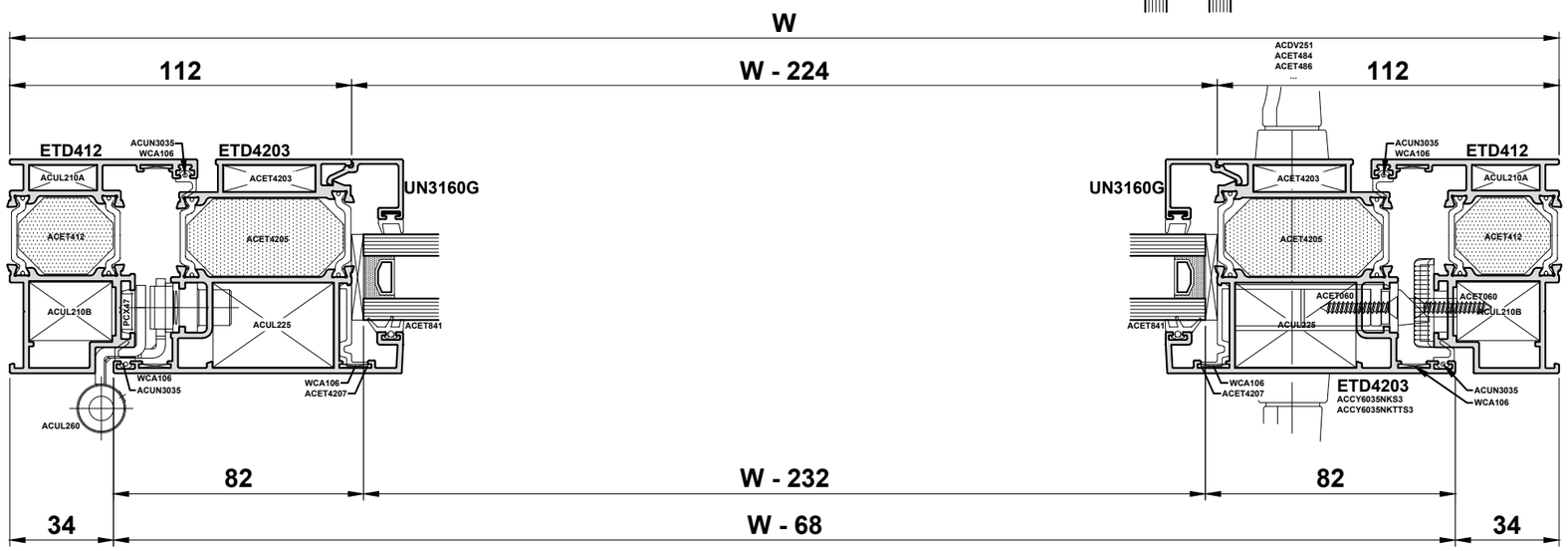

Do Not Scale From This Drawing

Flush Open Out Double Door Lift Lever Full Frame Quick-Glaze Bead

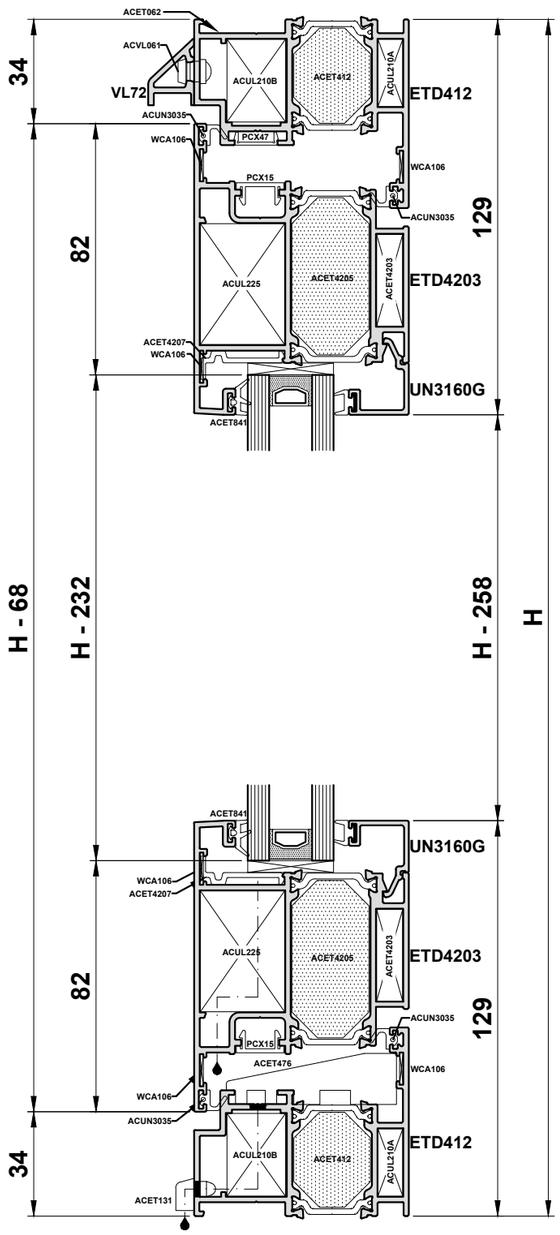

Profile Cutting Schedule			
UN3160G	4		H - 258
UN3160G	4		W / 2 - 193
ETD412	2		W
ETD412	2		H
ETD4203	4		W / 2 - 37
ETD4203	4		H - 68
ETD445	1		H - 110
PCX15	4		H - 106
PCX15	4		W / 2 - 106
PCX47	2		H - 82
PCX47	1		H - 81
PCX47	2		W / 2 - 82
VL72	1		W - 11

MIDRAIL			
ETD4302	2		W / 2 - 193
UN3160G	8		W / 2 - 193
UN3160G	4		H2 - 187
UN3160G	4		H1 - 187

Glass Sizes		
Without ETD4302	H - 232	W / 2 - 201
Top Glass With ETD4302	H2 - 161	W / 2 - 201
Bottom Glass With ETD4302	H1 - 161	W / 2 - 201

Accessories		
ACCY3560S3	2	Euro Cylinder
ACDV251	2 Pair	Handles
ACDV737	2	Shootbolt
ACDV738	2	Shootbolt
ACET060	40	Screw for Lock & Keep
ACET060	8	Screw for ACDV737/738
ACET131	4	Drainage Cap
ACET4157	Pair	ETD445 End Cap
ACET4203	8	Sash Cleat
ACET4205	4 x W / 2 & 4 x H	Sash Foam
ACET476	4	Run Up Block
...	...	Screw for ACUL260
ACET4207	20	Bridge Packers
ACET841	4 x W / 2 & 4 x H	E Gasket
ACUL077	2 x W & 2 x H	Outer Frame Foam
ACUL210A	4	Outer Frame Cleat
ACUL210B	4	Outer Frame Cleat
ACUL225	8	Sash Cleat
ACUL260	6	Hinge
ACUL276	1	Double Door Secondary Lock
ACUL277/8	1	Double Door Primary Lock
ACUL279	1	Double Door Keep Kit
ACUN3035	4 x W & 7 x H	Flipper Gasket

...	...	Screw for ACUL260
ACUN3513	2 + H / 300	Screw for ETD447
ACVL059 / ACVL072	2 Pair	VL72 End Cap
ACVL061	W/300 + 2	VL72 Rivet
WCA106	20	Chevrons

*See Page E72 for lock options.
**See B & E for handle options.

Midrail Accessories		
ACET4302	2 x W / 2	ETD4302 Foam
ACUN3512	8	Screws
ACET841	4 x W	E Gasket
ACET4207	8	Bridge Packer

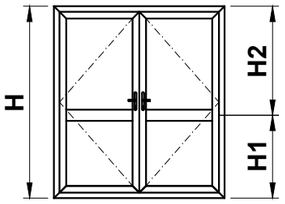

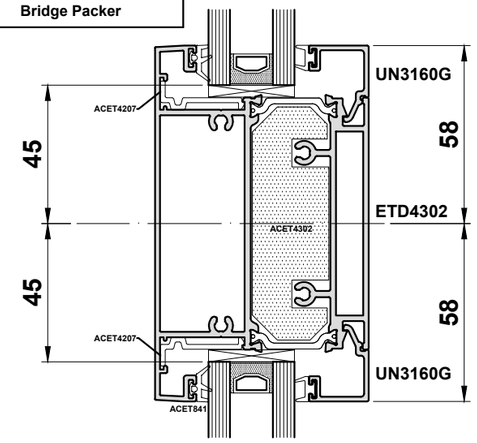

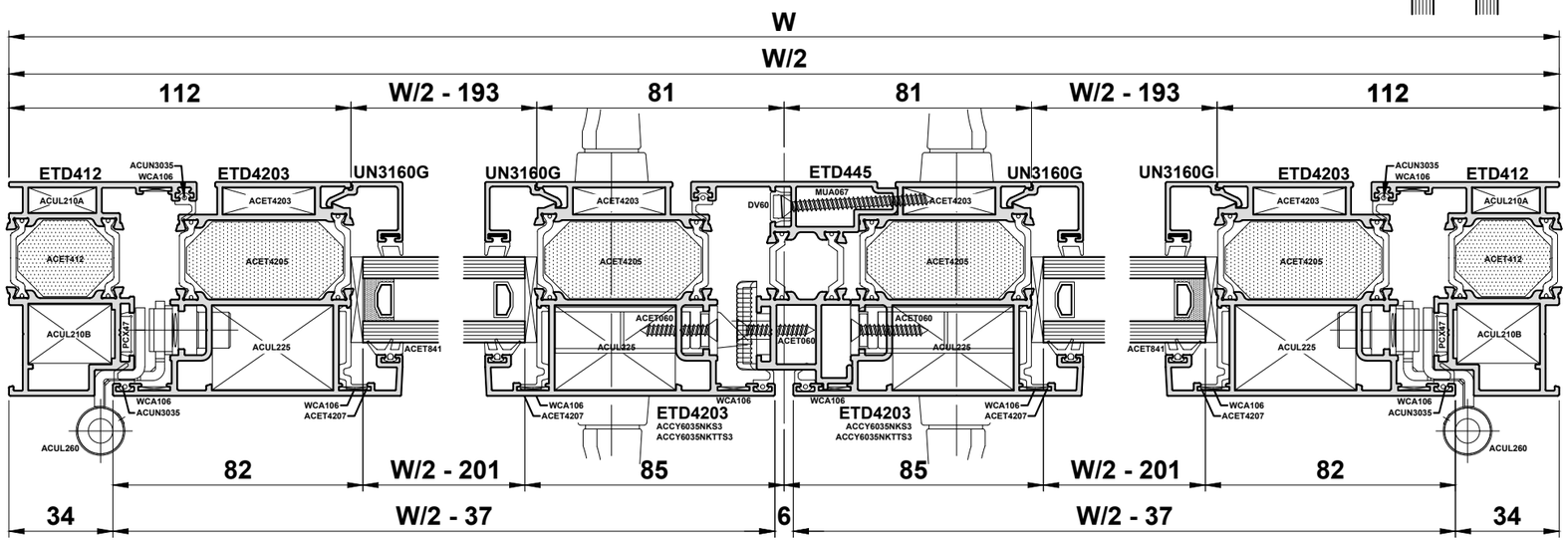

Do Not Scale From This Drawing

Flush Open Out Double Door Lift Lever Low Rebate Threshold Quick-Glaze Bead

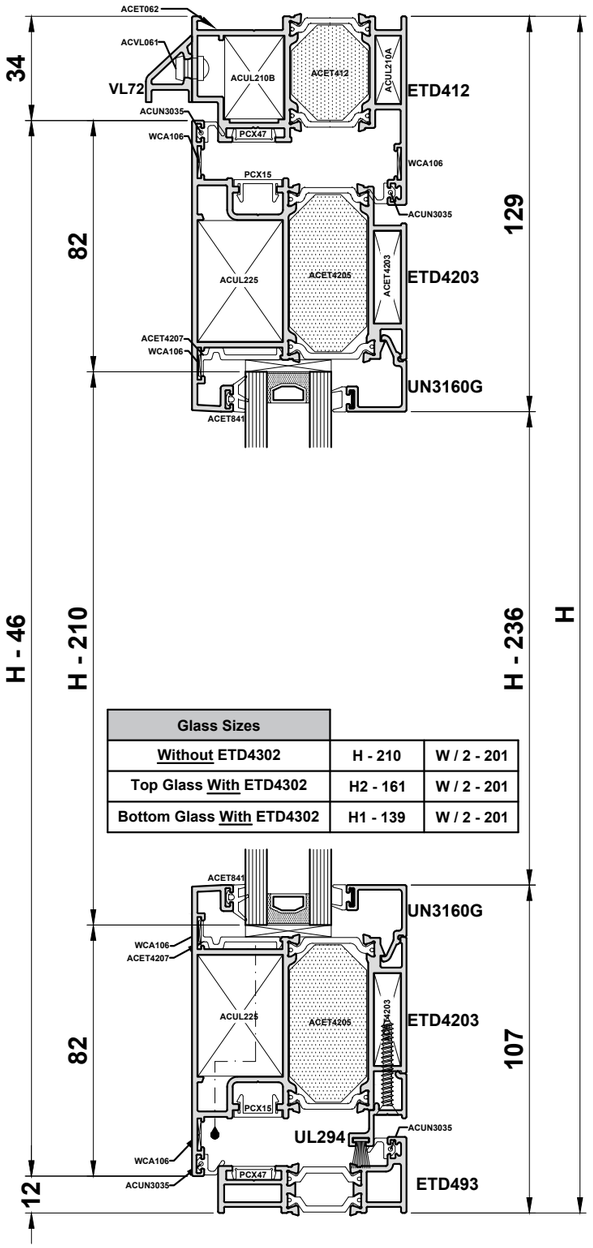

Glass Sizes		
Without ETD4302	H - 210	W / 2 - 201
Top Glass With ETD4302	H2 - 161	W / 2 - 201
Bottom Glass With ETD4302	H1 - 139	W / 2 - 201

Profile Cutting Schedule		
UN3160G	4	H - 258
UN3160G	4	W / 2 - 193
ETD412	1	W
ETD412	2	H
ETD493	1	W
ETD4203	4	W / 2 - 37
ETD4203	4	H - 46
ETD445	1	H - 81.5
PCX15	4	H - 84
PCX15	4	W / 2 - 106
PCX47	2	H - 56
PCX47	1	H - 81.5
PCX47	2	W - 82
DV60	1	H -115
UL294	2	W / 2 - 108
VL72	1	W - 11

MIDRAIL		
ETD4302	2	W / 2 - 193
UN3160G	8	W / 2 - 193
UN3160G	4	H2 - 187
UN3160G	4	H1 - 165

Accessories		
ACCY3560S3	2	Euro Cylinder
ACDV251	2 Pair	Handles
ACDV737	2	Shootbolt
ACDV738	2	Shootbolt
ACET060	40	Screw for Lock & Keep
ACET060	8	Screw for ACDV737/738
ACET131	4	Drainage Cap
ACET4155	Pair	ETD445 End Cap
ACET4203	8	Sash Cleat
ACET4205	4 x W / 2 & 4 x H	Sash Foam
ACET476	4	Run Up Block
ACET4193	Pair	ETD493 End Cap
ACET4207	20	Bridge Packers
ACET841	4 x W / 2 & 4 x H	E Gasket
ACUL077	2 x W & 2 x H	Outer Frame Foam
ACUL210A	2	Outer Frame Cleat
ACUL210B	2	Outer Frame Cleat
ACUL225	8	Sash Cleat
ACUL260	6	Hinge
ACUL276	1	Double Door Secondary Lock
ACUL277/8	1	Double Door Primary Lock
ACUL279	1	Double Door Keep Kit
ACUL295	2	Low Threshold Bracket

ACUN3035	4 x W & 7 x H	Flipper Gasket
...	...	Screw for ACUL260
ACUN3513	2 + H / 300	Screw for ETD447
ACVL059 / ACVL072	2 Pair	VL72 End Cap
ACVL061	W/300 + 2	VL72 Rivet
WCA106	20	Chevrons

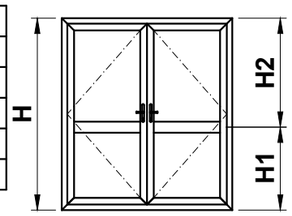

Midrail Accessories		
ACET4302	2 x W / 2	ETD4302 Foam
ACUN3512	16	Screws
ACET841	4 x W	E Gasket
ACET4207	8	Bridge Packer

*See Page E72 for lock options.
**See B & E for handle options.

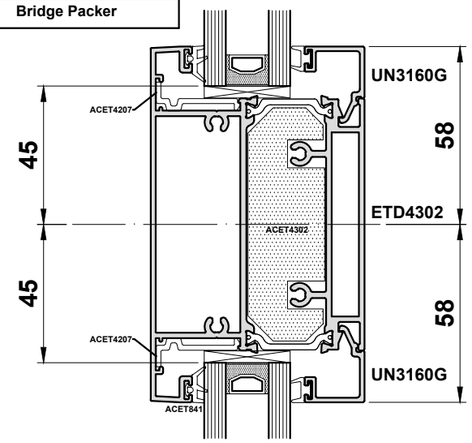

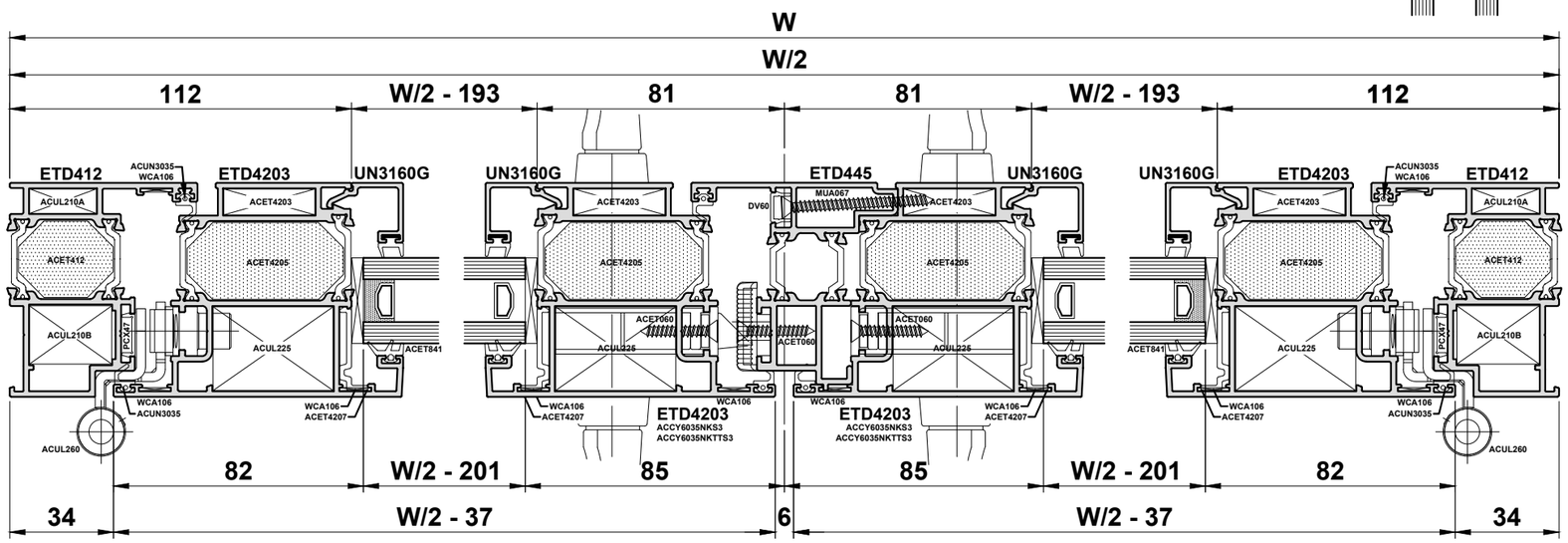

Do Not Scale From This Drawing

Flush Open Out Double Door Lift Lever Low Ramp Threshold Quick-Glaze Bead

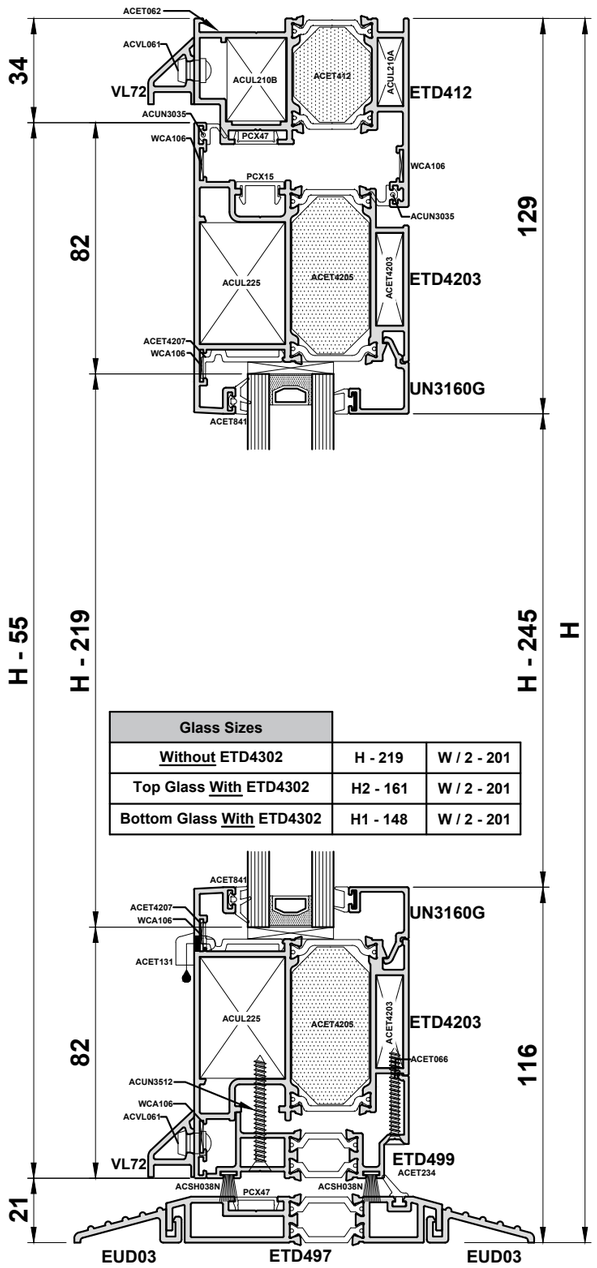

Glass Sizes		
Without ETD4302	H - 219	W / 2 - 201
Top Glass With ETD4302	H2 - 161	W / 2 - 201
Bottom Glass With ETD4302	H1 - 148	W / 2 - 201

Profile Cutting Schedule			
UN3160G	4		H - 258
UN3160G	4		W / 2 - 193
ETD412	1		W
ETD412	2		H - 15
ETD497	1		W
EUD03	2		W
ETD4203	4		W / 2 - 37
ETD4203	4		H - 55
ETD445	1		H - 81
ETD499	2		W / 2 - 108
PCX15	4		H - 68.5
PCX15	4		W / 2 - 106
PCX47	2		H - 56
PCX47	1		H - 81
PCX47	2		W - 82
DV60	1		H - 124
VL72	1		W - 11
VL72	2		W / 2 - 50

MIDRAIL			
ETD4302	2		W / 2 - 193
UN3160G	8		W / 2 - 193
UN3160G	4		H2 - 187
UN3160G	4		H1 - 174

Accessories		
ACCY3560S3	2	Euro Cylinder
ACDV251	2 Pair	Handles
ACDV737	2	Shootbolt
ACDV738	2	Shootbolt
ACET060	40	Screw for Lock & Keep
ACET060	8	Screw for ACDV737/738
ACET131	4	Drainage Cap
ACET4152	Pair	ETD445 End Cap
ACET4203	8	Sash Cleat
ACET4205	4 x W / 2 & 4 x H	Sash Foam
ACET476	4	Run Up Block
ACET4198	Pair	ETD497 End Cap
ACET4207	20	Bridge Packers
ACET841	4 x W / 2 & 4 x H	E Gasket
ACUL077	2 x W & 2 x H	Outer Frame Foam
ACUL210A	2	Outer Frame Cleat
ACUL210B	2	Outer Frame Cleat
ACUL225	8	Sash Cleat
ACUL260	6	Hinge
ACUL276	1	Double Door Secondary Lock
ACUL277/8	1	Double Door Primary Lock
ACUL279	1	Double Door Keep Kit
ACUL295	2	Low Threshold Bracket

ACUN3035	4 x W & 7 x H	Flipper Gasket
...	...	Screw for ACUL260
ACUN3513	2 + H / 300	Screw for ETD447
ACVL059 / ACVL072	2 Pair	VL72 End Cap
ACVL061	W/300 + 2	VL72 Rivet
WCA106	20	Chevrons

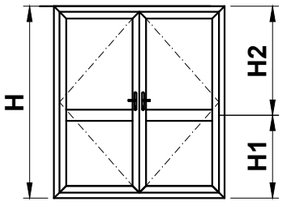

Midrail Accessories		
ACET4302	2 x W / 2	ETD4302 Foam
ACUN3512	16	Screws
ACET841	4 x W	E Gasket
ACET4207	8	Bridge Packer

*See Page E72 for lock options.
**See B & E for handle options.

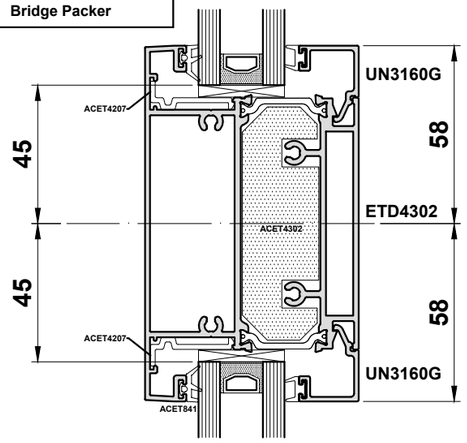

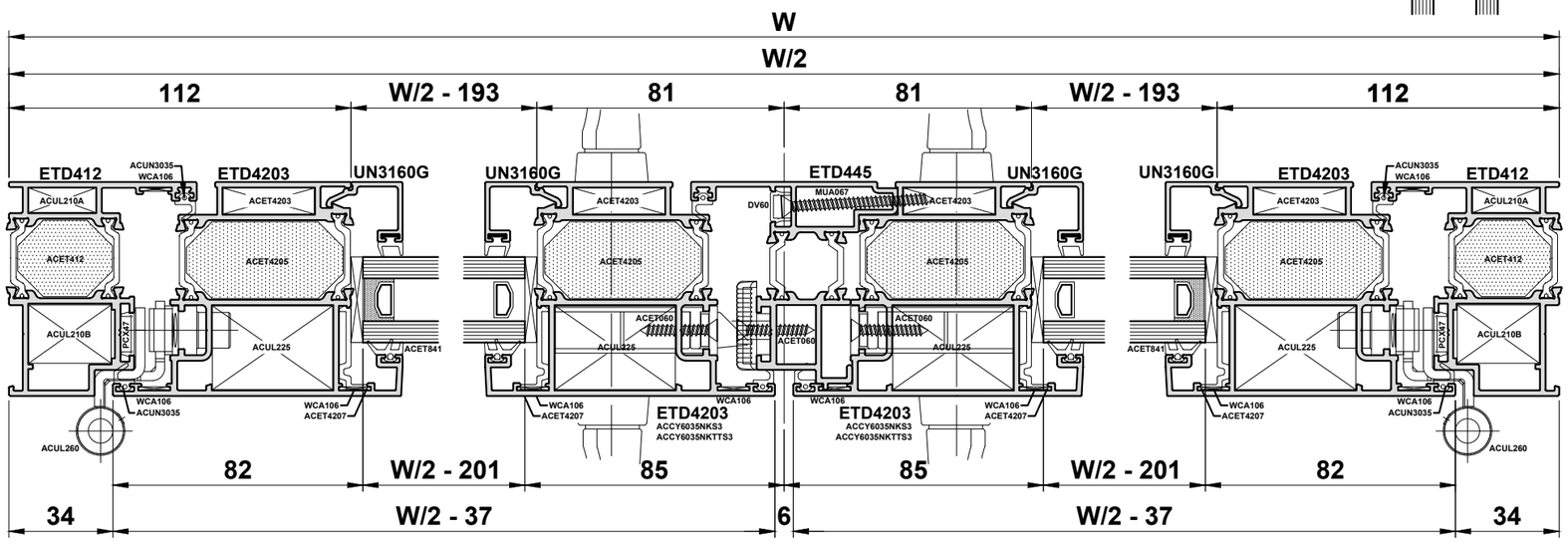

Do Not Scale From This Drawing

Flush Open Out Double Door Finger Bolt Full Frame Quick-Glaze Bead

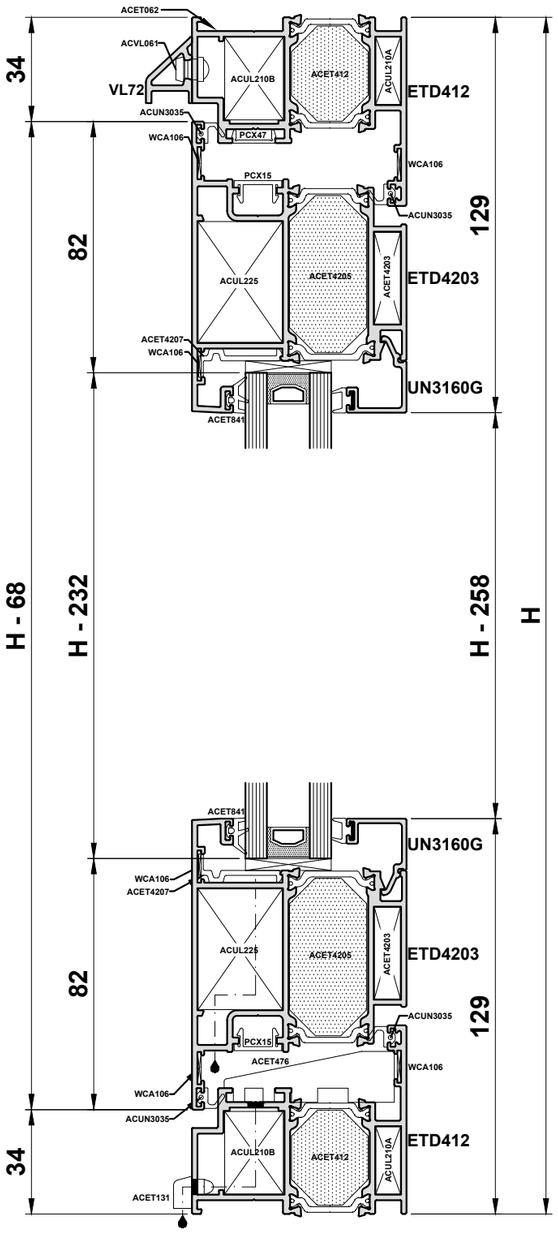

Profile Cutting Schedule			
UN3160G	4		H - 258
UN3160G	4		W / 2 - 196
ETD412	2		W
ETD412	2		H
ETD4203	4		W / 2 - 40
ETD4203	4		H - 68
ETD446	1		H - 110
PCX15	4		H - 106
PCX15	4		W / 2 - 106
PCX47	2		H - 82
PCX47	1		H - 81
PCX47	2		W / 2 - 82
VL72	1		W - 11
MIDRAIL: ETD4302	2		W / 2 - 196
MIDRAIL: UN3160G	8		W / 2 - 196
MIDRAIL: UN3160G	4		H1 - 187
MIDRAIL: UN3160G	4		H2 - 187

Glass Sizes		
Without ETD4302	H - 232	W / 2 - 204
Top Glass With ETD4302	H2 - 161	W / 2 - 204
Bottom Glass With ETD4302	H1 - 161	W / 2 - 204

Accessories		
ACCY3560S3	1	Euro Cylinder
**	**	Handles
ACET060	16	Screw for Lock
ACET131	X	Drainage Cap
ACET4158	Pair	ETD448 End Cap
ACET4203	8	Sash Cleat
ACET4205	2 x W & 4 x H	Sash Foam
ACET4207	20	Bridge Packers
ACET475	4	Run Up Block
...	...	Screw for ACUL260
ACPD844	1	Shootbolt Adaptor
ACPD84..	1	10mm Dia Glavanised Rod
ACSM015	Pair	Escutcheon
ACET412	2 x W & 2 x H	Outer Frame Foam
ACUL210A	4	Outer Frame Cleat
ACUL210B	4	Outer Frame Cleat
ACUL225	8	Sash Cleat
ACUL242	2	Finger Bolt Guide
ACUL260	6	Hinge
ACUL390	Pair	Finger Bolt Flat Keep
ACUN3035	4 x W & 6 x H	Flipper Gasket
...	...	Screw for ACUL260
ACUN3513	2 + H / 300	Screw for ETD448
...	...	Screw for ACUL260
ACUN3513	2 + H / 300	Screw for ETD447
ACVL059 / ACVL072	2 Pair	VL72 End Cap
ACVL061	W/300 + 2	VL72 Rivet
WCA106	20	Chevrons

*See Page E72 for lock options.
**See B & E for handle options.

Midrail Accessories		
ACET4302	2 x W / 2	ETD4302 Foam
ACUN3512	8	Screws
ACET841	4 x W	E Gasket
ACET4207	8	Bridge Packer

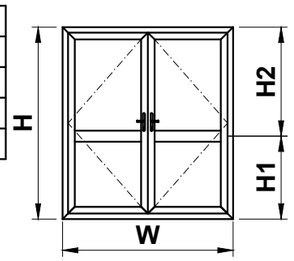

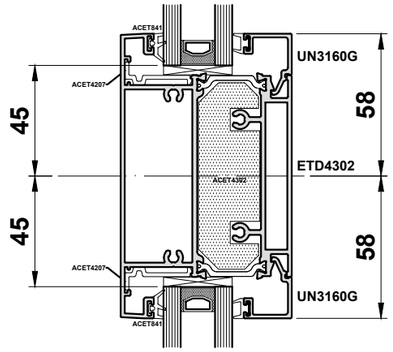

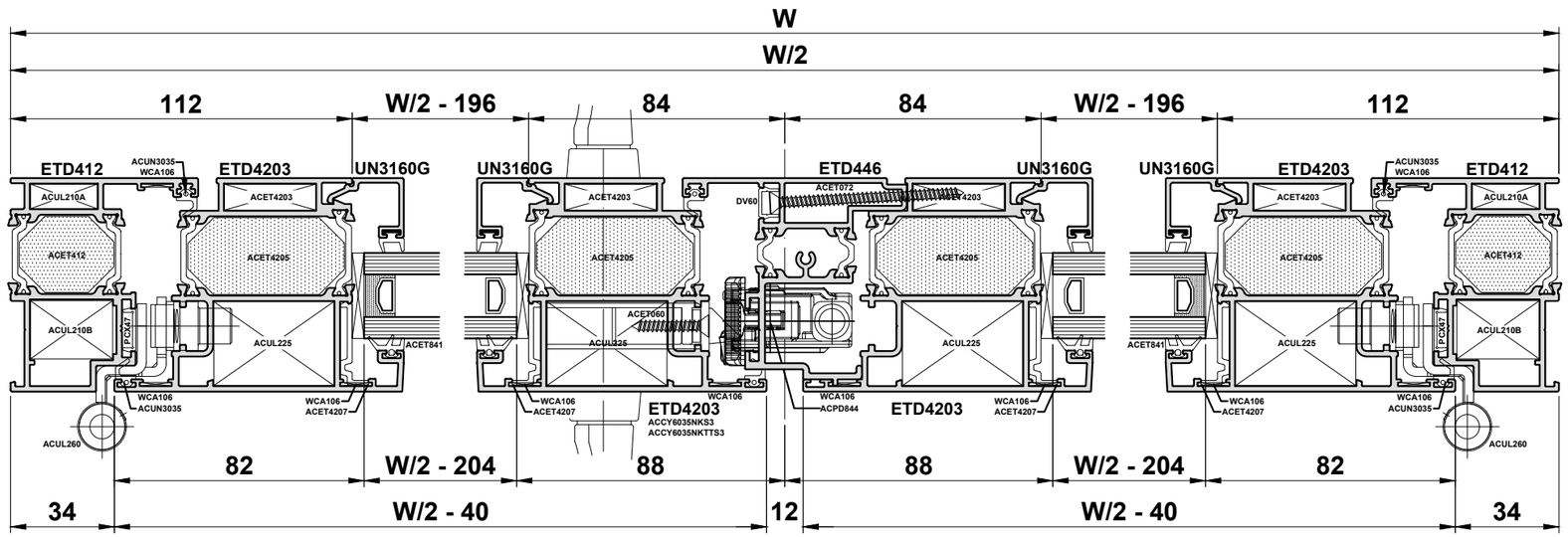

Do Not Scale From This Drawing

Alitherm 400 Flush Door

SAWING TABLES : OPEN IN

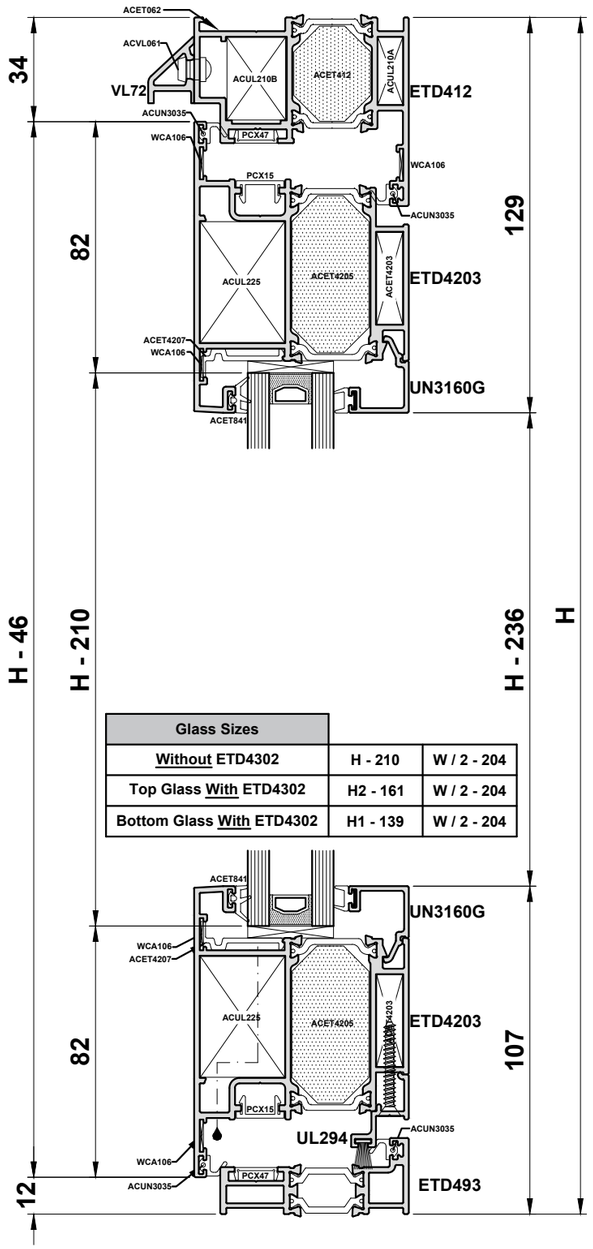

Profile Cutting Schedule			
UN3160G	4		H - 236
UN3160G	4		W / 2 - 196
ETD412	1		W
ETD412	2		H
ETD493	1		W
ETD4203	4		W / 2 - 40
ETD4203	4		H - 46
ETD446	1		H - 81.5
PCX15	4		H - 84
PCX15	4		W / 2 - 106
PCX47	2		H - 56
PCX47	1		H - 81.5
PCX47	2		W / 2 - 82
DV60	1		H - 110.5
UL294	2		W / 2 - 111
VL72	1		W - 11

MIDRAIL				
ETD4302	2			W / 2 - 196
UN3160G	8			W / 2 - 196
UN3160G	4			H1 - 165
UN3160G	4			H2 - 187

Accessories		
ACCY3560S3	1	Euro Cylinder
**	**	Handles
ACET060	16	Screw for Lock
ACET131	X	Drainage Cap
ACET4156	Pair	ETD446 End Cap
ACET4203	8	Sash Cleat
ACET4205	2 x W & 4 x H	Sash Foam
ACET4207	20	Bridge Packers
ACET475	4	Run Up Block
ACET4193	Pair	ETD493 End Cap
ACPD844	1	Shootbolt Adaptor
ACPD84..	1	10mm Dia Glavanised Rod
ACSM015	Pair	Escutcheon
ACET412	2 x W & 2 x H	Outer Frame Foam
ACUL210A	2	Outer Frame Cleat
ACUL210B	2	Outer Frame Cleat
ACUL225	8	Sash Cleat
ACUL242	2	Finger Bolt Guide
ACUL260	6	Hinge
ACUL295	2	Low Threshold Bracket
ACUL390	Pair	Finger Bolt Flat Keep
ACUN3035	4 x W & 6 x H	Flipper Gasket
...	...	Screw for ACUL260

ACUN3513	2 + H / 300	Screw for ETD448
ACET841	2 x W & 4 x H	E Gasket
ACVL072	2 Pair	VL72 End Cap
ACVL061	W/300 + 2	VL72 Rivet
WCA106	20	Chevrons
*	1	Double Door Primary Lock

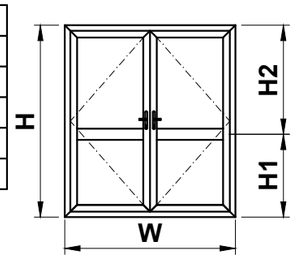

Midrail Accessories		
ACET4302	2 x W / 2	ETD4302 Foam
ACUN3512	16	Screws
ACET841	4 x W	E Gasket
ACET4207	8	Bridge Packer

*See Page E72 for lock options.
**See B & E for handle options.

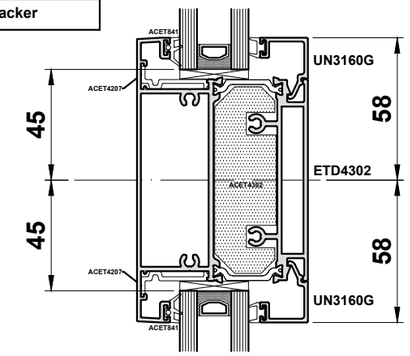

Glass Sizes		
Without ETD4302	H - 210	W / 2 - 204
Top Glass With ETD4302	H2 - 161	W / 2 - 204
Bottom Glass With ETD4302	H1 - 139	W / 2 - 204

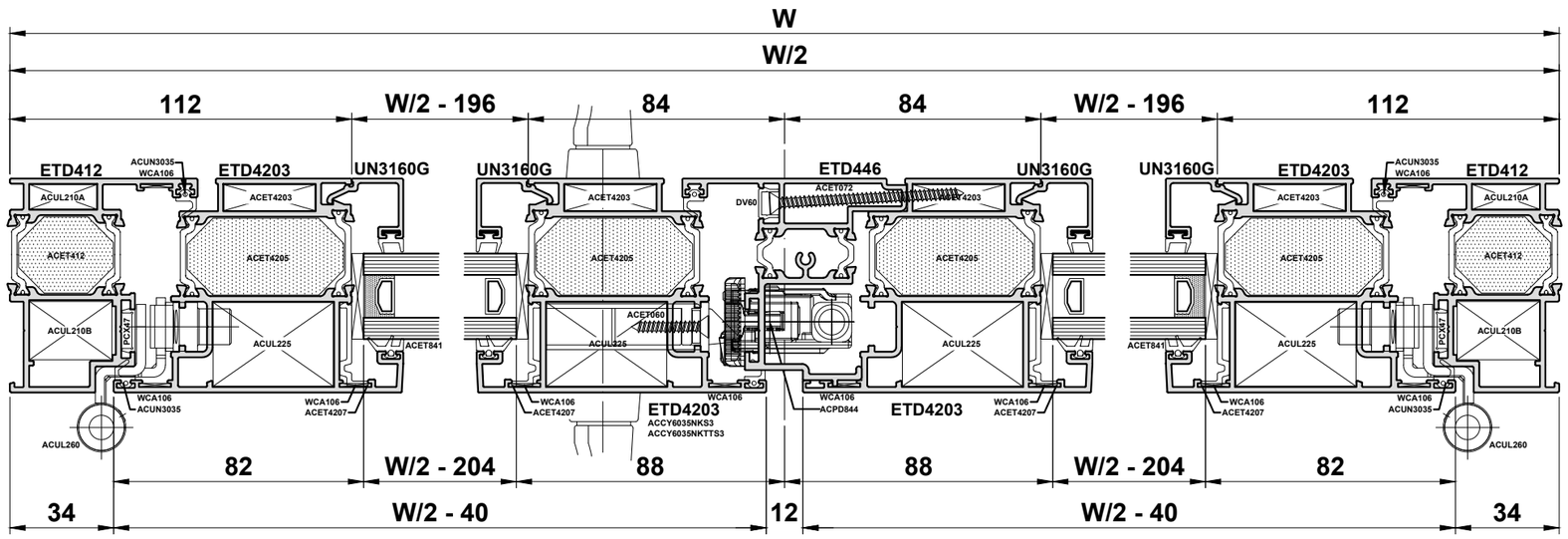

Do Not Scale From This Drawing

ISSUED: JULY 2024

Alitherm 400 Flush Door

SAWING TABLES : OPEN IN

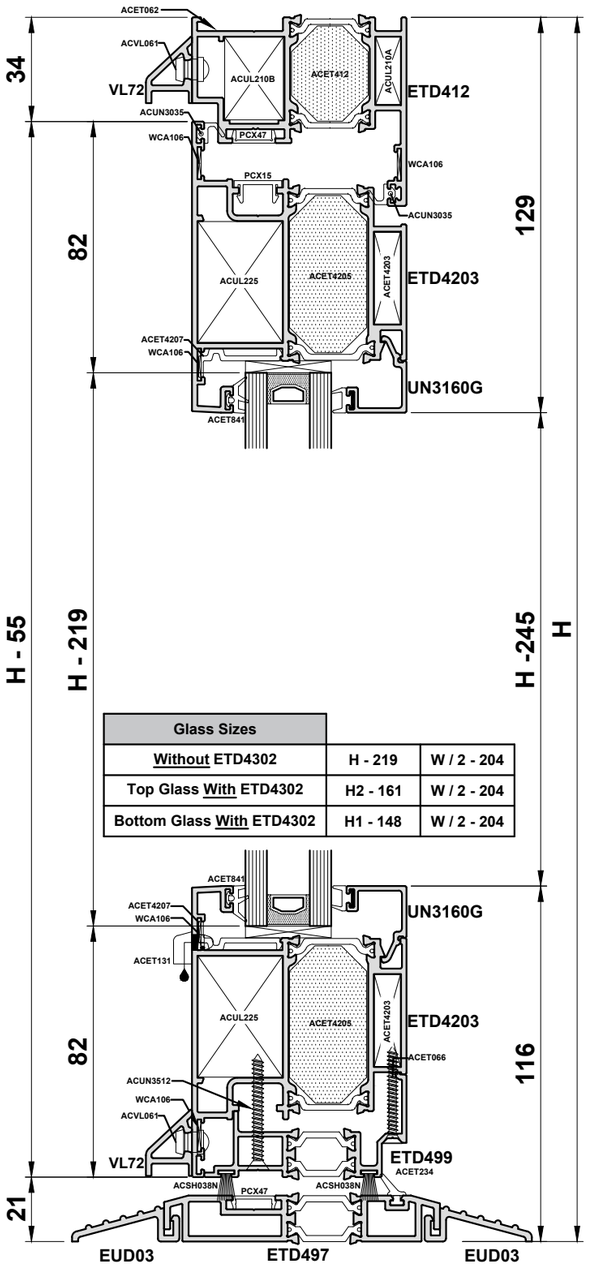

Glass Sizes		
Without ETD4302	H - 219	W / 2 - 204
Top Glass With ETD4302	H2 - 161	W / 2 - 204
Bottom Glass With ETD4302	H1 - 148	W / 2 - 204

Profile Cutting Schedule		
UN3160G	4	H - 245
UN3160G	4	W / 2 - 196
ETD412	1	W
ETD412	2	H - 15
ETD497	1	W
EUD03	2	W
ETD4203	4	W / 2 - 40
ETD4203	4	H - 55
ETD446	1	H - 81
ETD499	2	W / 2 - 111
PCX15	4	H - 68.5
PCX15	4	W / 2 - 106
PCX47	2	H - 56
PCX47	1	H - 81
PCX47	2	W - 82
DV60	1	H - 124.5
VL72	1	W - 11
VL72	2	W / 2 - 53

MIDRAIL		
ETD4302	2	W / 2 - 196
UN3160G	8	W / 2 - 196
UN3160G	4	H1 - 174
UN3160G	4	H2 - 187

Accessories		
ACCY3560S3	1	Euro Cylinder
**	**	Handles
ACET060	16	Screw for Lock
ACET131	X	Drainage Cap
ACET4153	Pair	ETD446 End Cap
ACET4203	8	Sash Cleat
ACET4205	2 x W & 4 x H	Sash Foam
ACET4207	20	Bridge Packers
ACET475	4	Run Up Block
ACET4198	Pair	ETD497 End Cap
ACPD844	1	Shootbolt Adaptor
ACPD84..	1	10mm Dia Glavanised Rod
ACSM015	Pair	Escutcheon
ACET412	2 x W & 2 x H	Outer Frame Foam
ACUL210A	2	Outer Frame Cleat
ACUL210B	2	Outer Frame Cleat
ACUL225	8	Sash Cleat
ACUL242	2	Finger Bolt Guide
ACUL260	6	Hinge
ACUL295	2	Low Threshold Bracket
ACUL390	Pair	Finger Bolt Flat Keep
ACUN3035	4 x W & 6 x H	Flipper Gasket
...	...	Screw for ACUL260

ACUN3513	2 + H / 300	Screw for ETD448
ACET841	2 x W & 4 x H	E Gasket
ACVL072	2 Pair	VL72 End Cap
ACVL061	W/300 + 2	VL72 Rivet
WCA106	20	Chevrons
*	1	Double Door Primary Lock

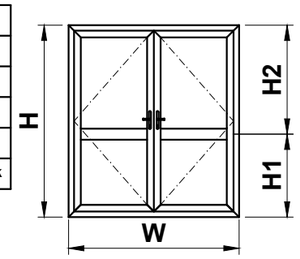

Midrail Accessories		
ACET4302	2 x W / 2	ETD4302 Foam
ACUN3512	16	Screws
ACET841	4 x W	E Gasket
ACET4207	8	Bridge Packer

*See Page E72 for lock options.
**See B & E for handle options.

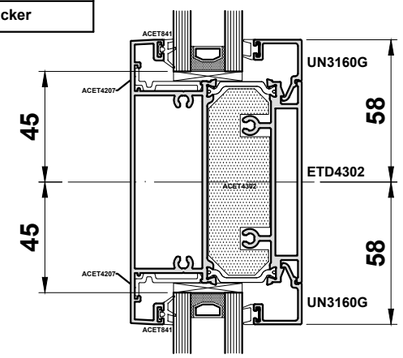

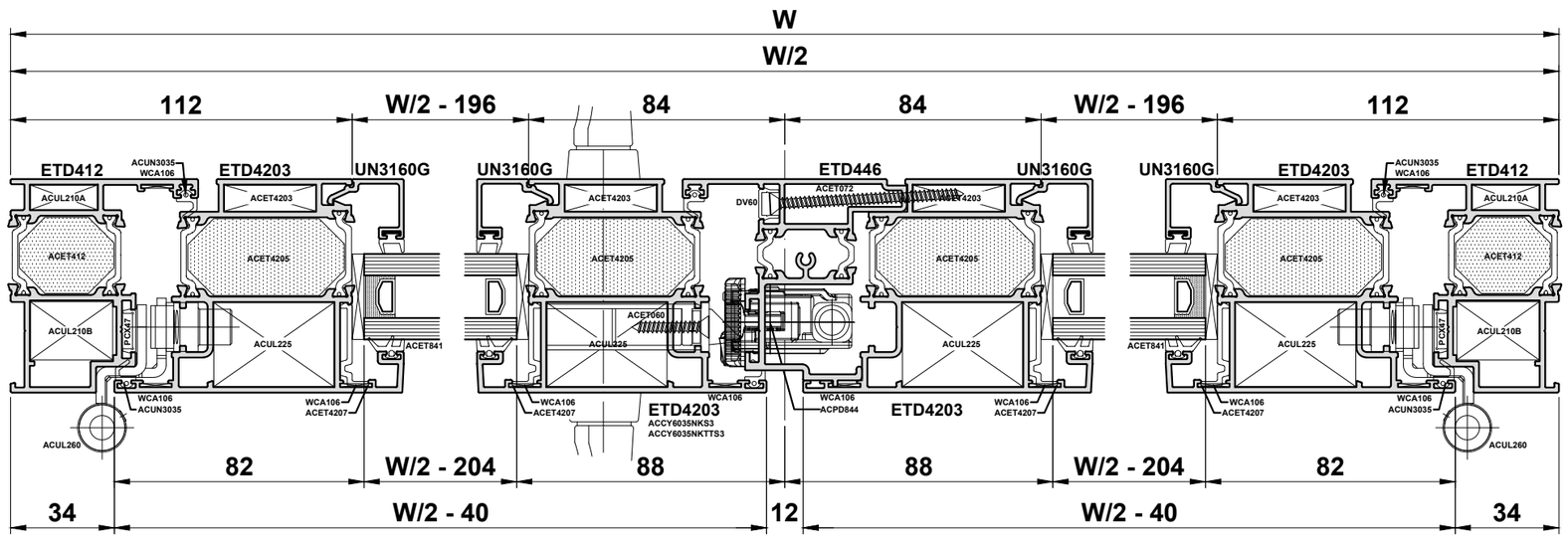

Do Not Scale From This Drawing

Fan Light Quick-Glaze Bead

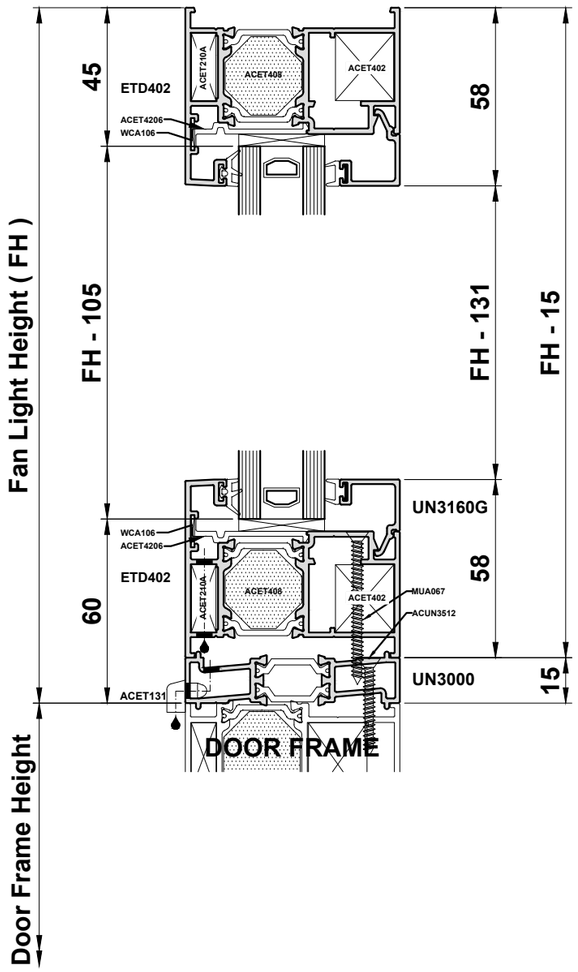

Profile Cutting Schedule				
UN3000	1			FW
UN3160G	4			FH - 131
UN3160G	4			FW - 82
ETD402	2			FW
ETD402	2			FH - 15

Accessories		
ACET402	4	Frame Cleat
ACET210A	4	Frame Cleat
ACET4206	4	Corner Chevron
ACET4207	8	Bridge Packers
ACET131	2	Drainage Cap
ACET408	2 X FW + 2 X FH	Outer Frame Foam
ACET841	2 X FW + 2 X FH	E Gasket

Glass Sizes		
	FH - 131	FW - 82

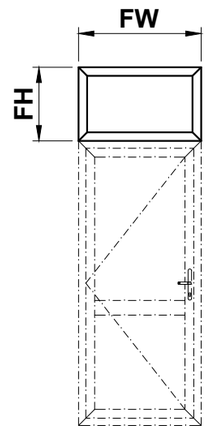

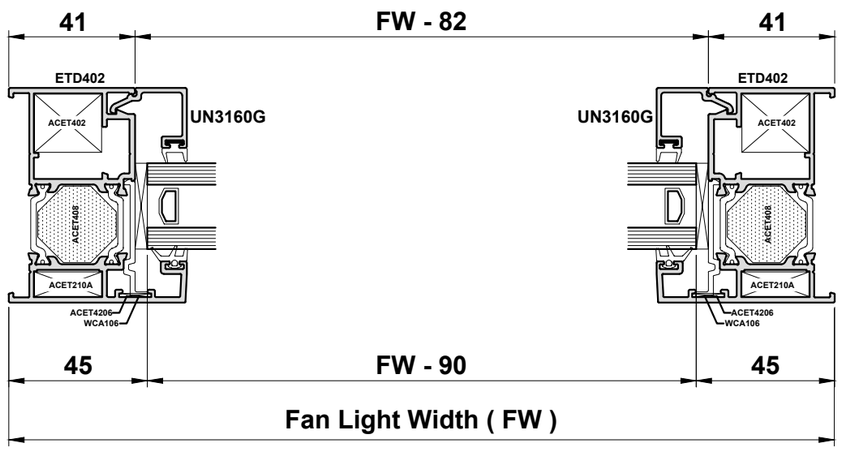

Do Not Scale From This Drawing

Side Light Quick-Glaze Bead

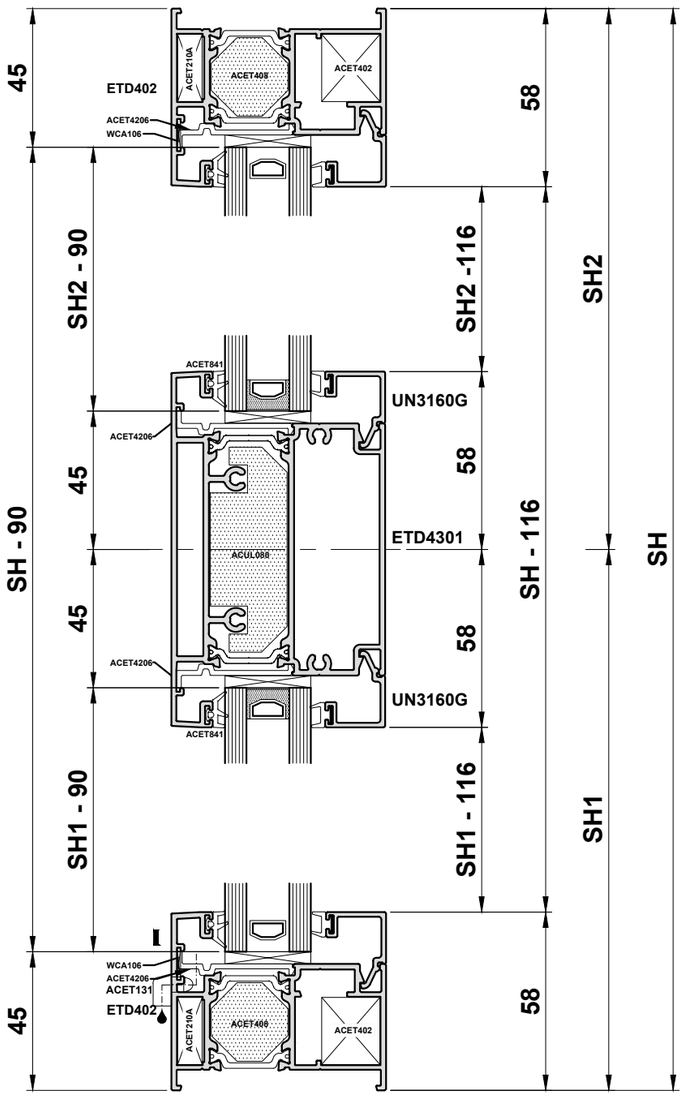

Profile Cutting Schedule				
	UN3160G	2		SH - 116
	UN3160G	2		SW - 100
	ETD402	2		SW - 18
	ETD402	2		SH
MIDRAIL	ETD4301	1		SW - 100
MIDRAIL	UN3160G	2		SW - 100
MIDRAIL	UN3160G	2		SH - 90
MIDRAIL	UN3160G	2		SH - 90

Accessories		
ACET402	4	Frame Cleat
ACET210A	4	Frame Cleat
ACET4206	4	Corner Chevron
ACET4207	8	Bridge Packers
ACET131	2	Drainage Cap
ACET408	2 X SW + 2 X SH	Outer Frame Foam
ACET841	2 X SW + 2 X SH	E Gasket

Midrail Accessories		
ACUL080	7 X SW	ETD4301 Foam
ACUN3512	8	Screws
ACET841	2 X SW	E Gasket
ACET4207	4	Bridge Packer

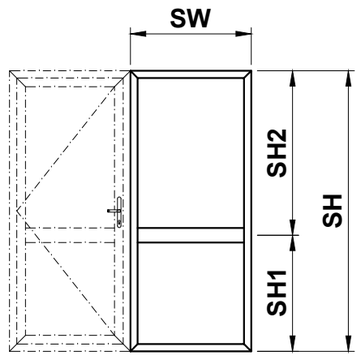

Glass Sizes		
Without ETD4301	SH - 90	SW - 100
Top Glass With ETD4301	SH2 - 90	SW - 100
Bottom Glass With ETD4301	SH1 - 90	SW - 100

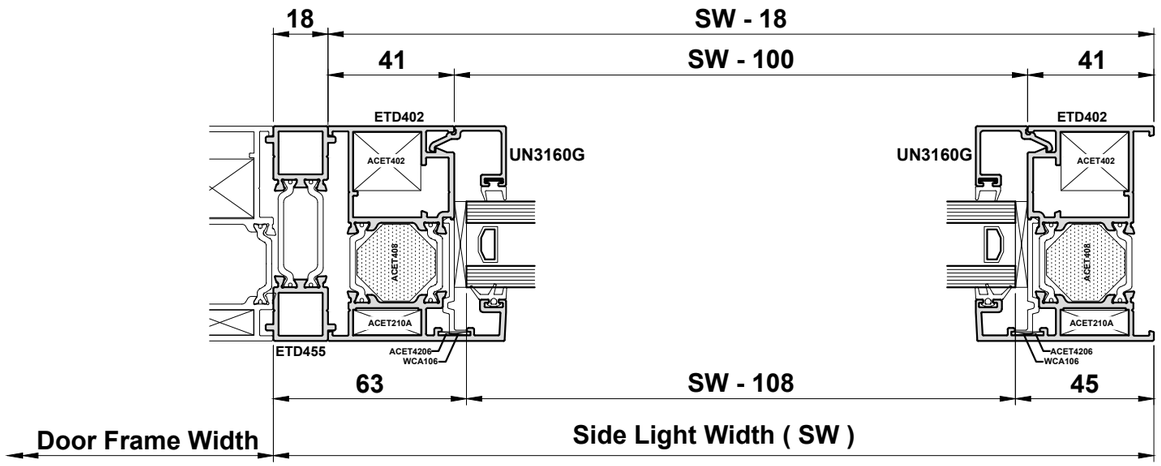

Do Not Scale From This Drawing

SAWING TABLES : OPEN IN

Do Not Scale From This Drawing