Main Index

Main Index

Updates

DATE	PAGE	DESCRIPTION
Jan-2026	ALL	• Added High Security Lift & Slide Gearing • Added ACVG649 Shootbolt Lock • Combined Upgrade and Hybrid pages • Updated Glazing Charts • Added Profiles: VG5008, VG921 • Removed Profiles: VG518 & VG511R • Added Accessories: ACMX01603, ACMX01604, ACCY3535TTS3, ACCY4545NKS1, ACCY4545PCS3, ACCY4050NK, ACDV228, ACVG611B, ACSM015N, ACSM016N, ACSM019N, ACSM024N, ACUN3586, ACUN3588, ACUN3916, ACVG256, ACVG257, ACVG319L, ACVG319R, ACVG320L, ACVG320R, ACVG323L, ACVG323R, ACVG523, ACVG618X, ACVG646, ACVG647, ACVG648, ACVG649, ACVG650, ACVG652, ACVG653, ACVG658, ACVG1597, ACVG1598, ACVG5031, ACVG5034, ACVG5055, ACVG5268, ACVG5276, ACVG5277, ACVG5278, ACVG5281, ACVG5284, ACVG5286, ACVG5287, ACVG5288, ACVG5328, ACVG5285 • Removed Accessories: ACMX01615T, ACMX0040, ACMX4050, ACVG916, ACMX1075, ACMX1130, ACSG611B, ACSM015, ACSM016, ACSM019, ACSM024, ACUG221, ACUG230, ACUG231, ACUG232, ACUG233, ACVG280N, ACVG290, ACVG291, ACVG292, ACVG515, ACVG516, ACVG531, ACVG545, ACVG617, ACVG618, ACVG910, ACVG950, ACVG952, ACVG953, ACVG1220, ACVG1222, ACVG1240, ACVG1274, ACVG1275, ACVG1277, ACVG1278, ACVG1279, ACVG1280

Specification

GENERAL DESCRIPTION

Visoglide Plus is a patio door system which can be operated by sliding or lift & slide hardware. The system achieves excellent U values inline with the current Building Regulations.

The system is suitable for replacement windows/doors in existing buildings and for installation into new buildings.

Visoglide Plus provides the option of multi-point locking with standard lever handles or off-set 'D' handles. Or for additional security, reinforced lever handles are available. Alternatively, a key operated shootbolt locking system can be used.

Assembly of the outerframe and the sashes is with mechanical cleats for which the holes are prepped using punch tools. See Pages E03 & E04 for details.

VG920 & VG921 use beads that are designed to be 'Tap In' with an intergrated gasket, providing a fast and efficient glazing process.
Sashes are available with co-extruded retaining gasket increasing fabrication and installation efficiency.

Hybrid profiles are also detailed in this manual which uses Visoglide Plus sash profiles with a range of new outer frames design to provide an economic choice to comply with Document L1A, L2A & L2B using a 1.0W/m²K centre pane.

PROFILE SPECIFICATION

The frames are constructed of aluminium alloy extrusion to BS EN 755-9 and BS EN 12020, extruded to 6063 T6 alloy. The internal and external extrusions are separated with a polyamide thermal break.

The external aluminium alloy extrusion is pre-treated and finished either:-

a) Anodised to BS 3987: 1987, grade AA25 to a natural self colour.

b) Polyester powder organic coating to BS 6496. Dual colour is available.

GENERAL MANUFACTURING

Outer frames are made by cutting the frame profiles with accurate 45° mitred ends using Tungsten Carbide Tipped Saw Blades, operating at approximately 3000 rpm.

The corner joints can be made using mechanically fixed corner cleats by punching the corners using the relevant punch tooling shown in section E of this manual. All joints should be sealed using ACSIL04 sealant

On polyester powder coated finishes, great care should be taken to avoid getting gap sealer on visible surfaces and should be removed as soon as possible with a clean cloth.

After machining, all exposed aluminium should be coated using ACSIL014 or painted to match frame.

Care should be exercised when using products not supplied by Smart Systems Ltd as no responsibility can be accepted.

Specification

DRAINAGE

As with all dry glazed systems, it is recommended that the profiles are adequately drained and ventilated. Refer to drainage details in section E of this manual, if in doubt, ask the Technical Department.

In order to get maximum performance and weather resistance it is recommended that drips are used over all vents.

OUTER FRAME & VENT MANUFACTURING INFORMATION

The outer frame members are cut with 45° mitred ends to the overall size required, measured to the longest point of the metal.

Corners are formed by coating the cut faces to be joined with ACSIL04 small gap sealer and by applying ACSIL013 cleat glue into the cleat chamber. Into the mitred corner insert the required corner cleats and, where required, the aluminium corner chevrons. The two mitred ends are then brought together and mechanically joined. The small gap sealer ensures a permanent joint and guards against the ingress of moisture and joint movement. After joining the corners, special care should be taken to ensure any excess sealer is removed from painted surfaces.

LOCKING

The vertical members should be prepped for the locking mechanism prior to fabrication and fitted before assembly. Stainless steel fixings shall be used for securing the locking mechanism and keeps in position.

GLAZING

Glazing can be 8-12mm, 24-26mm, 28-30mm or 36-38mm by selecting the relevant bead & gasket within the standard sash options.

Also available are VG5023 & VG5024 which can accept glazing up to 53mm.

For advise on window sizes outside of the recommended design limitations, please contact the Technical Department at Smart Systems Ltd Tel: 01934 876100

Specification

RECOMMENDED DESIGN LIMITATIONS

Sliding Sashes

Maximum Sash Weight:	250kg (see roller weight limits)
Minimum Sash Height:	800mm (NB. Lock will have two locking points where sash is below 1400mm) **1885mm for PAS24:2022**
Maximum Sash Height:	2500mm
Maximum Sash Width:	Providing sashes are within above limitations there is no maximum width.

Lift & Slide Sashes	Standard Gearing	High Security Gearing	High Security Gearing with extra roller
Maximum Sash Weight:	200kg	270kg	400kg
Minimum Sash Height:	1718mm	1877mm	1877mm
Maximum Sash Height:	2500mm	2500mm	2500mm
Minimum Sash Width:	702mm	650mm	650mm
Maximum Sash Width:	3294mm	3235mm	3235mm

Please see pages D01-D09 for more guidance on vent sizes & limitations.

The below is a summary of the sliding door testing under Kitemark Licence Number: KM530838. The full details may be downloaded from www.smartsystems.co.uk

Visoglide Plus Operational Performance (BS6375-2:2009)

Visoglide Plus has passed the operational & strength requirements of BS6375-2
(Test Report 8247857)

Visoglide Plus Security (PAS24:2022)

Visoglide Plus has been successfully tested to PAS24:2022
(Test Report 8247857)

Visoglide Plus U Values

Please refer to the Smart Systems' Document L White Paper or contact the Technical Department.

Specification

Kitemark™ Certificate

No. KM 530838

Visoglide Plus Aluminium Alloy Patio Door System

BS 4873:2016 / PAS 24:2022 - General and enhanced security performance requirements for door assemblies.

Profiles	Outer Frame:	VG5010/5011/5012/5013/516/518/519/610/612/618/620/621
	Leaf:	VG520/920/521N/921/5023/5024
	Interlocks:	VG534/535/536/539/590/592
	Frame Filler:	VG5014/5015
Multipoint Hardware	Locking:	ACSZ024/025/026
	Shootbolt:	ACVG752
	Keep:	ACSZ122/124/126/128/130/132
	Handle:	ACSZ882/883
	Cylinder + Cover:	ACIM442/ACCY4040S1
	Interlock Sec.	ACVG1598N
BT Hardware	Locking:	ACSZ040/041/042
	Keep:	ACSZ046/050
	Handle:	ACSZ750/751
	Cylinder + Cover:	ACCY3030S1
	Interlock Sec.	ACVG1598N
ACVG649 Hardware	Lock:	ACVG649
	Shootbolt:	ACVG5328
	Guides:	ACVG656 & ACVG657
	Keep:	ACVG658
	Handle:	ACVG319 ACVG320 ACVG323
	Cylinder:	ACCY4040NKS3 ACCY4545NKS3
	Interlock Sec.	ACVG1598N
Lift & Slide Hardware	Drive Gear:	ACVG5279 ACVG5277 ACVG5278 ACVG5289
	Keep:	ACVG5284 ACVG5288
	Lift & Slide Kit:	ACVG5285
	Connecting Rod:	ACVG269 ACVG270 ACVG271 ACVG272 ACVG273
	Interlock Sec:	ACVG256 ACVG257 ACVG1597N

First Issued: 29/09/2008 Latest Issue: 27/09/2018

Specification

Size Limitations And Performance Characteristics

Door Type	Leaf Width (mm) - Maximum	Leaf Height (mm) - Maximum	Air Permeability Classification	Watertightness Classification	Resistance To Wind Classification	Exposure Category As Given In Table 1 Of BS6375-1:2009
2 pane sliding doorset	2000	2400*	3	7A	AE2400	2000+
3 pane (2 sliding) doorset	2000	2400*	3	3A	1200	1200
Active/Fixed leaf	2000	2400*	3	7A	AE2400	2000+
Lift & Slide	2000	2500	3	7A	AE2400	2000+

* Door leaf up to 2913mm with appropiate key operated shootbolt lock (Subject to weight limitation).

⚠ **Important!** ⚠
The size parameters shown against Kitemark are the maximum allowed without the need for further testing.
Please note these are not necessarily the system parameters which may be smaller or larger.
Please refer to fabrication parameters in this manual.

First Issued: 29/09/2008 Latest Issue: 27/09/2018

Specification

Hybrid profiles deliver a refined mix of strength, elegance, and performance.
They are compatible with VG520, VG920, and VG920G sashes.

Compliant with Approved Doc L
- L1A New Dwellings
- L1B Existing Dwellings
- L2A New Commercial
- L2B Existing Commercial

The Visoglide Hybrid system is designed for sliding applications only.

To ensure correct product selection, look for the HYB symbol to help identify Hybrid compatible profiles and accessories.

Number	Picture	Page	Perim. mm	Mec. mm	Ix(cm4) wx(cm3)	Iy(cm4) wy(cm3)	Length	Pack pr.	MF	SA	KL	HP	M
VG12	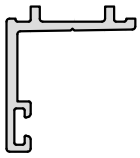	A58	110	26	- ----- -	- ----- -	6.5	1	✓	✓	✓	✓	
VG51 HYB	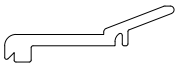 **PVC**	A43	115	-	- ----- -	- ----- -	7	1	✓				
VG52	 **PVC**	A57	25	-	- ----- -	- ----- -	7	1	✓				
VG53	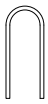 **Stainless Steel**	A57	106	-	- ----- -	- ----- -	6.5	1	✓				
VG55 **(BL)** HYB	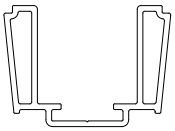 **PVC**	A24	218	-	- ----- -	- ----- -	7	1	✓				
VG56 **(BL)** HYB	 **PVC**	A24	74	-	- ----- -	- ----- -	7	1	✓				
VG408	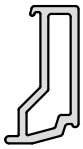	A55	69	28	- ----- -	- ----- -	6.5	1	✓	✓	✓	✓	
VG416	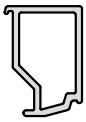	A55	77	37	- ----- -	- ----- -	6.5	1	✓	✓	✓	✓	
VG430	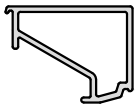	A55	106	51	- ----- -	- ----- -	6.5	1	✓	✓	✓	✓	

A = Outside
B = Inside

MF = Mill Finish
SA = Silver Anodised
KL = Basic Colour
HP = Special Colour
M = Dual Colour

Visoglide Plus

PROFILES : TECHNICAL INFORMATION

Number	Picture	Page	Perim. mm	Mec. mm	Ix(cm4) wx(cm3)	Iy(cm4) wy(cm3)	Length	Pack pr.	MF	SA	KL	HP	M
VG520	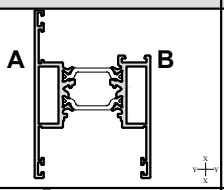	A32	449	141	20.40 ----- 7.47	13.83 ----- 3.96	6.5	1	✓	✓	✓	✓	✓
VG521N	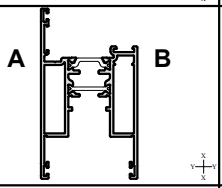	A34	534	173	27.85 — 6.00	24.23 — 10.07	6.5 - 5	1	✓	✓	✓	✓	✓
VG530	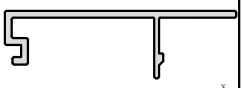	A42	195	72	5.97 ----- 1.71	0.36 ----- 0.94	6.5	1	✓	✓	✓	✓	
VG532	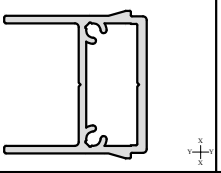	A50	188	-	6.40 ----- 3.30	3.60 ----- 1.50	6.5	1	✓				
VG533	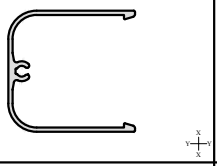	A50	267	124	4.74 ----- 1.66	6.19 ----- 2.90	6.5	1	✓	✓	✓	✓	
VG534	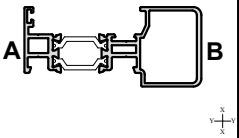	A36	249	51	30.6 ----- 7.57	4.11 ----- 2.38	6.5	1	✓	✓	✓	✓	✓
VG535	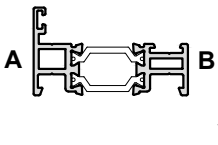	A36	249	51	9.18 ----- 3.33	1.03 ----- 0.97	6.5	1	✓	✓	✓	✓	✓
VG536	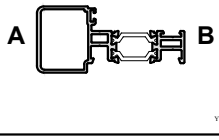	A37	316	109	26.83 ----- 6.33	3.97 ----- 2.42	6.5	1	✓	✓	✓	✓	✓
VG537	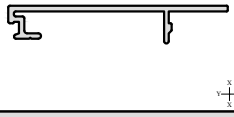	A42	175	68	4.95 ----- 1.45	0.10 ----- 0.45	6.5	1	✓	✓	✓	✓	

A = Outside
B = Inside

MF = Mill Finish
SA = Silver Anodised
KL = Basic Colour
HP = Special Colour
M = Dual Colour

ISSUE: JANUARY 2026

Visoglide Plus

Number	Picture	Page	Perim. mm	Mec. mm	Ix(cm4) wx(cm3)	Iy(cm4) wy(cm3)	Length	Pack pr.	MF	SA	KL	HP	M
VG538	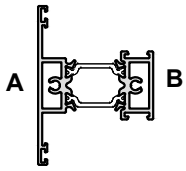	A31	367	109	17.13 — 5.87	8.49 — 2.43	6.5	1	✓	✓	✓	✓	✓
VG539	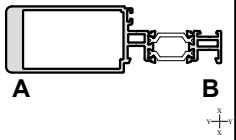	A37	388	188	112.65 ----- 15.56	10.36 ----- 6.13	6.5	1	✓	✓	✓	✓	✓
VG540	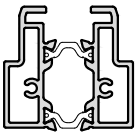	A46	295	48	6.40 ----- 2.95	7.74 ----- 3.64	6.5	1	✓	✓	✓	✓	✓
VG541	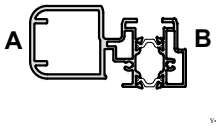	A46	477	201	69.99 ----- 15.29	17.62 ----- 7.47	6.5	1	✓	✓	✓	✓	✓
VG542	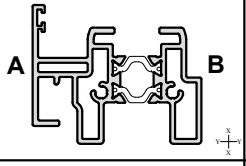	A48	406	150	17.3 — 6.0	6.6 — 2.7	6.5	1	✓	✓	✓	✓	✓
VG549	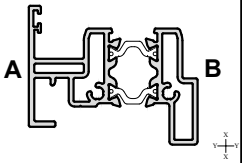	A48	300	153.3	16.74 — 5.83	5.21 — 2.32	6.5	1	✓	✓	✓	✓	✓
VG552N (BL)	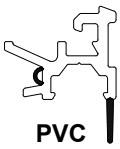	A40	108	-	- ----- -	- ----- -	6.5	1	✓				
VG553N (BL)	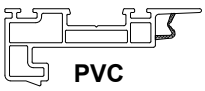	A40	181	-	- ----- -	- ----- -	6.5	1	✓				
VG560	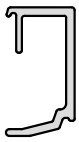	A55	99	32	- ----- -	- ----- -	6.5	1	✓	✓	✓	✓	

A = Outside
B = Inside

MF = Mill Finish
SA = Silver Anodised
KL = Basic Colour
HP = Special Colour
M = Dual Colour

Number	Picture	Page	Perim. mm	Mec. mm	Ix(cm4) wx(cm3)	Iy(cm4) wy(cm3)	Length	Pack pr.	MF	SA	KL	HP	M
VG561		A55	68	23	- ----- -	- ----- -	6.5	1	✓	✓	✓	✓	
VG565	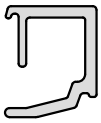	A36	83	24	- ----- -	- ----- -	6.5	1	✓	✓	✓	✓	
VG566	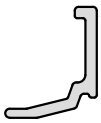	A36	52	15	- ----- -	- ----- -	5	1	✓	✓	✓	✓	
VG572	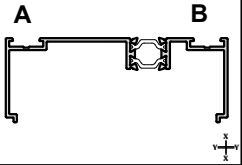	A62	531	85	88.08 ----- 16.34	8.05 ----- 2.42	7	1	✓	✓	✓	✓	✓
VG573	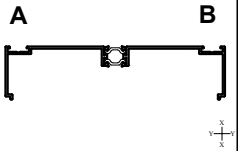	A64	631	85	247.35 ----- 26.86	9.08 ----- 2.59	7	1	✓	✓	✓	✓	✓
VG577		A65	329	25	35.06 ----- 6.55	0.50 ----- 0.71	6.5	1	✓	✓	✓	✓	✓
VG578		A65	366	25	56.01 ----- 8.91	0.66 ----- 0.94	6.5	1	✓	✓	✓	✓	✓
VG580	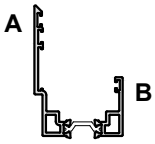	A49	327	99	11.4 ----- 4.1	13.5 ----- 6	6.5	1	✓	✓	✓	✓	✓
VG581	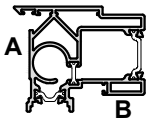	A49	331	128	33.1 ----- 9.2	21.8 ----- 8.9	6.5	1	✓	✓	✓	✓	✓

A = Outside
B = Inside

MF = Mill Finish
SA = Silver Anodised
KL = Basic Colour
HP = Special Colour
M = Dual Colour

Number	Picture	Page	Perim. mm	Mec. mm	Ix(cm4) wx(cm3)	Iy(cm4) wy(cm3)	Length	Pack pr.	MF	SA	KL	HP	M
VG584	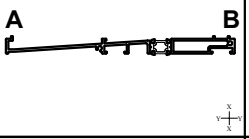	A66	522	25	182.64 ----- 18.10	0.75 ----- 1.04	6.5	1	✓	✓	✓	✓	✓
VG586 **(BL)**	 **Polyamide**	A39	33	-	- ----- -	- ----- -	6.5	1	✓				
VG590		A38	311	209	77.8 --- 10.3	3.1 --- 4.0	6.5	1	✓	✓	✓	✓	
VG592		A38	346	206	77.8 --- 10.3	3.1 --- 4.1	6.5	1	✓	✓	✓	✓	
VG594	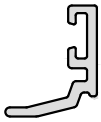	A38	64	17	- --- -	- --- -	5	1	✓	✓	✓	✓	
VG596	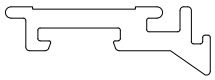 **Polyamide**	A41	90	-	- --- -	- --- -	6.5	1	✓				
VG610	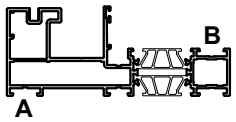	A30	626	210	145.4 ----- 19.1	20.3 ----- 6.5	6.5	1	✓	✓	✓	✓	✓
VG615	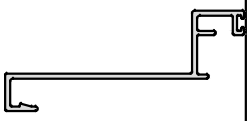	A53	299	123	2.756 --- 1.486	21.357 --- 5.309	6.5	1	✓	✓	✓	✓	
VG616		A53	329	118.6	2.814 --- 1.160	2.468 --- 6.223	6.5	1	✓	✓	✓	✓	

A = Outside
B = Inside

MF = Mill Finish
SA = Silver Anodised
KL = Basic Colour
HP = Special Colour
M = Dual Colour

Number	Picture	Page	Perim. mm	Mec. mm	Ix(cm4) wx(cm3)	Iy(cm4) wy(cm3)	Length	Pack pr.	MF	SA	KL	HP	M
VG618	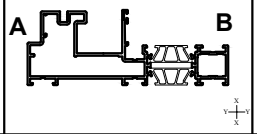	A30	644	244	163.4 / 20.6	20.8 / 6.6	6.5	1	✓	✓	✓	✓	✓
VG620	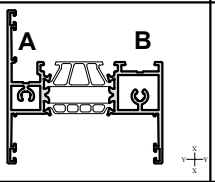	A35	485	128	50.8 / 12.6	12.6 / 3.1	7	1	✓	✓	✓	✓	✓
VG621	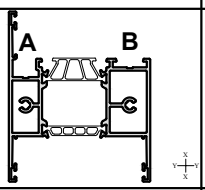	A35	550	167	60.7 / 15.1	26.5 / 5.5	7	1	✓	✓	✓	✓	✓
VG630		A45	242	96	15.32 / 3.98	0.39 / 0.26	6.5	1	✓	✓	✓	✓	
VG632	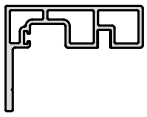	A44	249	166	15.7 / 4.6	5.1 / 1.6	6.5	1	✓	✓	✓	✓	
VG671	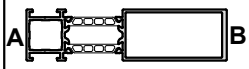	A59	383	98	93.0 / 15.8	6.9 / 4.6	6.5	1	✓	✓	✓	✓	✓
VG674	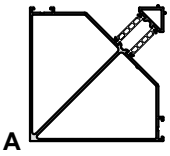	A60	603	236	208.2 / 32.8	208.2 / 32.8	6.5	1	✓	✓	✓	✓	✓
VG681	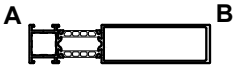	A59	431	145	154.7 / 21.5	8.9 / 6.0	6.5	1	✓	✓	✓	✓	✓
VG920 VG920G	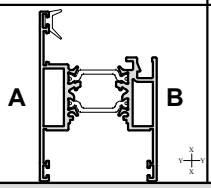	A32	457	142	20.80 / 7.70	13.70 / 3.91	6.5	1	✓	✓	✓	✓	✓

A = Outside
B = Inside

MF = Mill Finish
SA = Silver Anodised
KL = Basic Colour
HP = Special Colour
M = Dual Colour

Number	Picture	Page	Perim. mm	Mec. mm	Ix(cm4) wx(cm3)	Iy(cm4) wy(cm3)	Length	Pack pr.	MF	SA	KL	HP	M
VG921	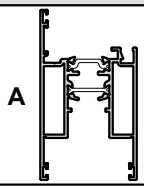	A34	547	177	24.27 / 9.02	27.68 / 6.38	6.5	1	✓	✓	✓	✓	✓
VG960 VG960G	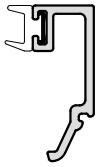	A54	111	33	- / -	- / -	6.5	1	✓	✓	✓	✓	
VG964		A54	109	25	- / -	- / -	6.5	1	✓	✓	✓	✓	
VG5008	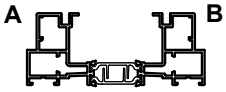	A26	533	208	133.03 / 22.62	18.22 / 8.40	7	1	✓	✓	✓	✓	✓
VG5010	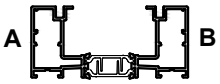	A25	502	141	102.64 / 19.59	17.94 / 8.19	7	1	✓	✓	✓	✓	✓
VG5011	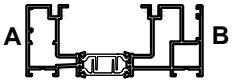	A25	591	221	144.99 / 23.57	19.9 / 8.96	7	1	✓	✓	✓	✓	✓
VG5012	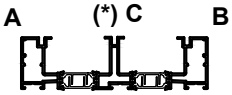	A28	632	154	359.66 / 41.97	25.66 / 12.34	7	1	✓	✓	✓	✓	✓
VG5013	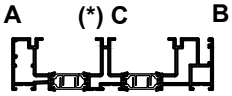	A28	720	234	461.92 / 48.37	27.47 / 12.96	7	1	✓	✓	✓	✓	✓
VG5014		A51	167	59	3.67 / 1.16	0.07 / 0.33	6.5	1	✓	✓	✓	✓	

A = Outside
B = Inside

MF = Mill Finish
SA = Silver Anodised
KL = Basic Colour
HP = Special Colour
M = Dual Colour

Visoglide Plus

PROFILES : TECHNICAL INFORMATION

Number	Picture	Page	Perim. mm	Mec. mm	Ix(cm4) wx(cm3)	Iy(cm4) wy(cm3)	Length	Pack pr.	MF	SA	KL	HP	M
VG5015		A51	186	67	6.28 / 1.74	0.07 / 0.37	6.5	1	✓	✓	✓	✓	
VG5016 HYB	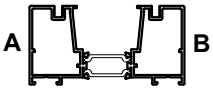	A27	480.7	157.2	91.13 / 17.80	21.99 / 8.59	7	1	✓	✓	✓	✓	✓
VG5017 HYB	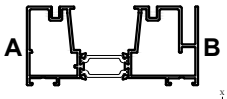	A27	551.4	217.3	123.42 / 21.10	23.83 / 9.38	7	1	✓	✓	✓	✓	✓
VG5018 HYB	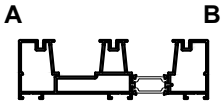	A29	724.5	177.4	321.44 / 38.31	32.87 / 12.74	7	1	✓	✓	✓	✓	✓
VG5019 HYB	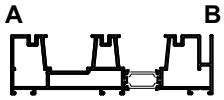	A29	795.3	237.5	398.17 / 44.14	34.75 / 13.37	7	1	✓	✓	✓	✓	✓
VG5023	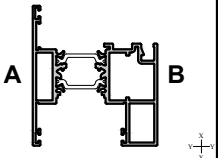	A33	449	157	38.01 / 11.28	19.87 / 6.02	6.5	1	✓	✓	✓	✓	✓
VG5024	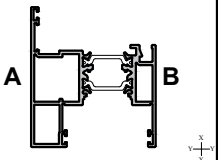	A33	495	157	36.95 / 10.50	19.02 / 5.80	6.5	1	✓	✓	✓	✓	✓
VG5036 HYB	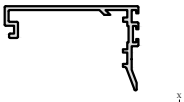	A43	275.2	73.6	- / -	- / -	6.5	1	✓	✓	✓	✓	
VG5040	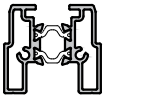	A47	275.9	63	8.36 / 3.92	5.32 / 2.86	6.5	1	✓	✓	✓	✓	✓

A = Outside
B = Inside

MF = Mill Finish
SA = Silver Anodised
KL = Basic Colour
HP = Special Colour
M = Dual Colour

ISSUE: JANUARY 2026

Number	Picture	Page	Perim. mm	Mec. mm	Ix(cm4) wx(cm3)	Iy(cm4) wy(cm3)	Length	Pack pr.	MF	SA	KL	HP	M
VG5042	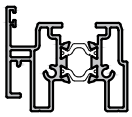	A47	390.7	145	16.46 — 5.90	7.02 — 3.27	6.5	1	✓	✓	✓	✓	✓
VG5050 (BL)	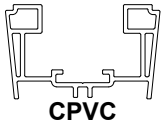 CPVC	A24	293	-	- ----- -	- ----- -	7.0	1	✓				
VG5051 (BL)	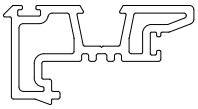 Polyamide	A39	293	-	- ----- -	- ----- -	6.5	1	✓				
VG5052 (BL) HYB	 PVC CO-EX	A41	-	-	- ----- -	- ----- -	6.5	1	✓				
VG5058	A  B	A61	475	85	66.40 — 12.70	7.06 — 5.39	6.5	1	✓	✓	✓	✓	✓
VG5059	A B	A63	632	85	66.40 — 12.70	7.06 — 5.39	6.5	1	✓	✓	✓	✓	✓
VG5074	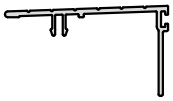	A51	219	69	- — -	- — -	6.5	1	✓	✓	✓	✓	
VG5075	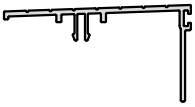	A51	260	76	- — -	- — -	6.5	1	✓	✓	✓	✓	
VG5077	A 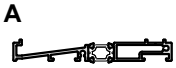 B	A65	337	25	40.74 — 7.24	0.55 — 0.77	6.5	1	✓	✓	✓	✓	✓

A = Outside
B = Inside

MF = Mill Finish
SA = Silver Anodised
KL = Basic Colour
HP = Special Colour
M = Dual Colour

Number	Picture	Page	Perim. mm	Mec. mm	Ix(cm4) wx(cm3)	Iy(cm4) wy(cm3)	Length	Pack pr.	MF	SA	KL	HP	M
VG5079	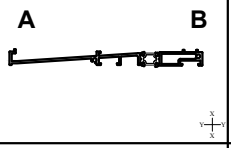	A66	493	25	149.44 / 15.86	0.64 / 0.84	6.5	1	✓	✓	✓	✓	✓
VG5154 HYB	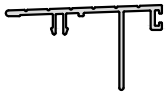	A52	224.9	61.3	- / -	- / -	6.5	1	✓	✓	✓	✓	
VG5155 HYB	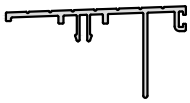	A52	266.8	68.5	- / -	- / -	6.5	1	✓	✓	✓	✓	
VG5176 HYB	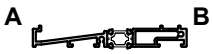	A65	332.3	25	38.39 / 6.95	0.53 / 0.75	6.5	1	✓	✓	✓	✓	✓
VG5177 HYB		A65	353.8	25	50.34 / 8.29	0.62 / 0.88	6.5	1	✓	✓	✓	✓	✓
VG5178 HYB		A66	483.5	25	138.66 / 15.07	0.62 / 0.87	6.5	1	✓	✓	✓	✓	✓
VG5179 HYB		A66	505	25	164.49 / 16.85	0.71 / 1	6.5	1	✓	✓	✓	✓	✓
VG5186 HYB	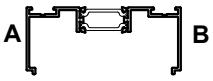	A61	475.2	85	63.38 / 12.33	7.07 / 5.16	7	1	✓	✓	✓	✓	✓
VG5187 HYB	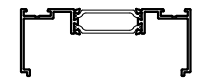	A62	469.5	85	80.30 / 14.21	7 / 5.26	7	1	✓	✓	✓	✓	✓

A = Outside
B = Inside

MF = Mill Finish
SA = Silver Anodised
KL = Basic Colour
HP = Special Colour
M = Dual Colour

Visoglide Plus

PROFILES : TECHNICAL INFORMATION

Number	Picture	Page	Perim. mm	Mec. mm	Ix(cm4) wx(cm3)	Iy(cm4) wy(cm3)	Length	Pack pr.	MF	SA	KL	HP	M
VG5188 HYB	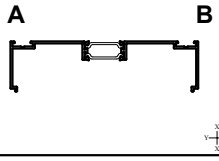	A63	597.2	85	195.74 --- 23.47	8.35 --- 7.80	7	1	✓	✓	✓	✓	✓
VG5189 HYB	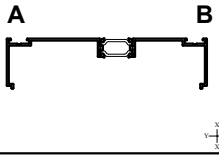	A64	631.2	85	227.58 --- 25.40	8.62 --- 8.53	7	1	✓	✓	✓	✓	✓
VG7075 (BL)	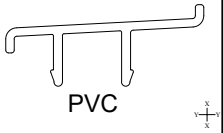	A24	118	-	- ----- -	- ----- -	6.5	1	✓				
ETC478		A67	736	314	1410.7 ----- 87.7	26.8 ----- 12.8	5	1	✓	✓	✓	✓	✓
GL724	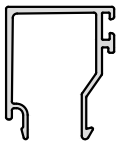	A56	186	49	- ----- -	- ----- -	6.5	1	✓	✓	✓	✓	
GL728	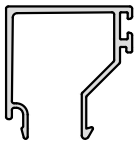	A56	198	63	- ----- -	- ----- -	6.5	1	✓	✓	✓	✓	
GL732	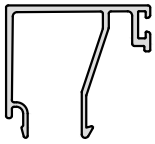	A56	216	57	- ----- -	- ----- -	6.5	1	✓	✓	✓	✓	
GL736	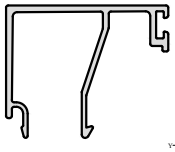	A56	224	61	- ----- -	- ----- -	-	1	✓	✓	✓	✓	
GL740	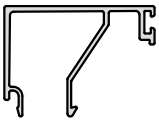	A56	155	65	- ----- -	- ----- -	-	1	✓	✓	✓	✓	

A = Outside
B = Inside

MF = Mill Finish
SA = Silver Anodised
KL = Basic Colour
HP = Special Colour
M = Dual Colour

Visoglide Plus

PROFILES : TECHNICAL INFORMATION

Number	Picture	Page	Perim. mm	Mec. mm	Ix(cm4) wx(cm3)	Iy(cm4) wy(cm3)	Length	Pack pr.	MF	SA	KL	HP	M
PCX47 (BL & WP)	 PVC	A57	**43.5**	-	- — -	- — -	6	1	✓				
UG852 (BL)	 PVC	A40	44	-	- ----- -	- ----- -	6.5	1	✓				
UN010		A58	111	44	- ----- -	- ----- -	7	1	✓	✓	✓	✓	
UN500		A50	137	52	0.06 ----- 0.08	1.68 ----- 0.84	6.5	1	✓	✓	✓	✓	
UN510	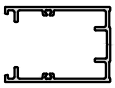	A50	374	160	12.14 ----- 3.72	9.47 ----- 4.73	6.5	1	✓	✓	✓	✓	
UN3040		A67	600	176	535.26 ----- 49.24	10.98 ----- 5.81	6.5	1	✓	✓	✓	✓	✓
UTL027	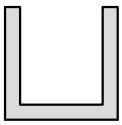	A57	86	-	0.18 ----- 0.19	0.28 ----- 0.37	6.0	1	✓	✓	✓	✓	
UTL080	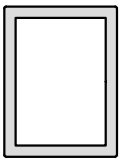	A50	139	-	8.13 ----- 4.07	5.08 ----- 3.39	6.0	1	✓	✓	✓	✓	
UN079 (VL72)		A57	101	32	- ----- -	- ----- -	6.5	1	✓	✓	✓	✓	

A = Outside
B = Inside

MF = Mill Finish
SA = Silver Anodised
KL = Basic Colour
HP = Special Colour
M = Dual Colour

ISSUE: JANUARY 2026

Number	Picture	Page	Perim. mm	Mec. mm	Ix(cm4) wx(cm3)	Iy(cm4) wy(cm3)	Length	Pack pr.	MF	SA	KL	HP	M
UN151 (VL75)	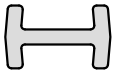	A59	54	-	- ----- -	- ----- -	6.5	1	✓				
UN075 (VL76)		A57	146	-	1.852 — 0.729	0.344 — 0.638	6.5	1	✓	✓	✓	✓	

A = Outside
B = Inside

MF = Mill Finish
SA = Silver Anodised
KL = Basic Colour
HP = Special Colour
M = Dual Colour

Primary Visible Side — — — — — — — — — Secondary Visible Side ——— · ——— · ———

VG5050
CPVC Infill

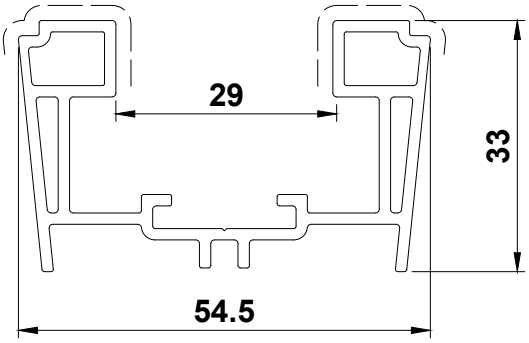

VG7075
PVC Cill Infill

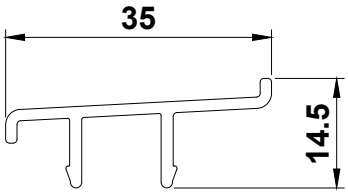

VG55 HYB
ABS Track Infill

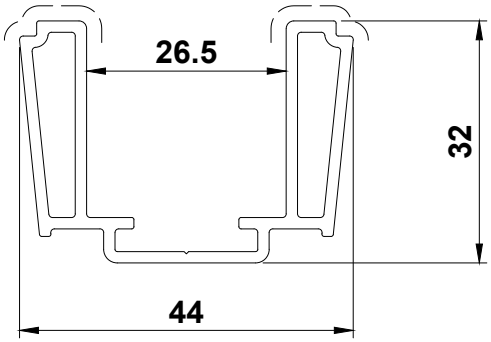

VG56 HYB
ABS Cill Infill

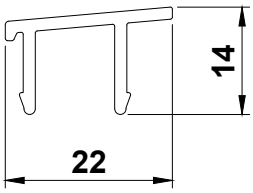

Primary Visible Side — — — — — — — — — — Secondary Visible Side ——— · ——— · ———

VG5010
Two Track Outer Frame

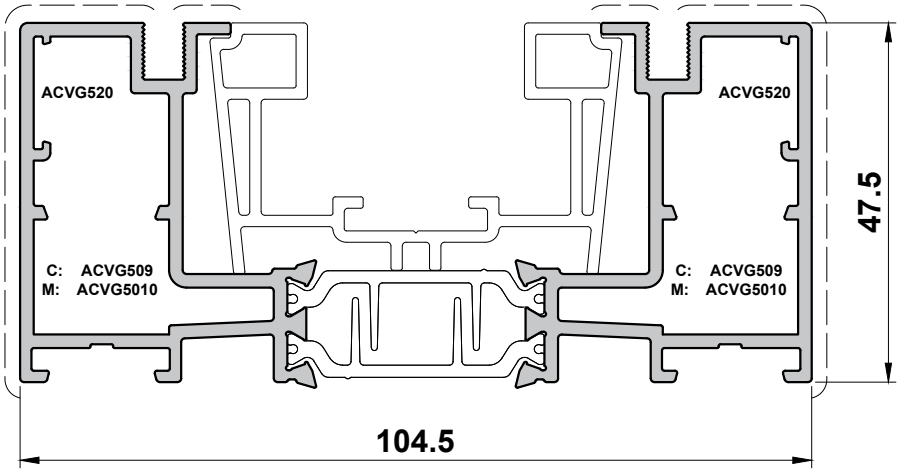

VG5011
Two Track Outer Frame with Upstand

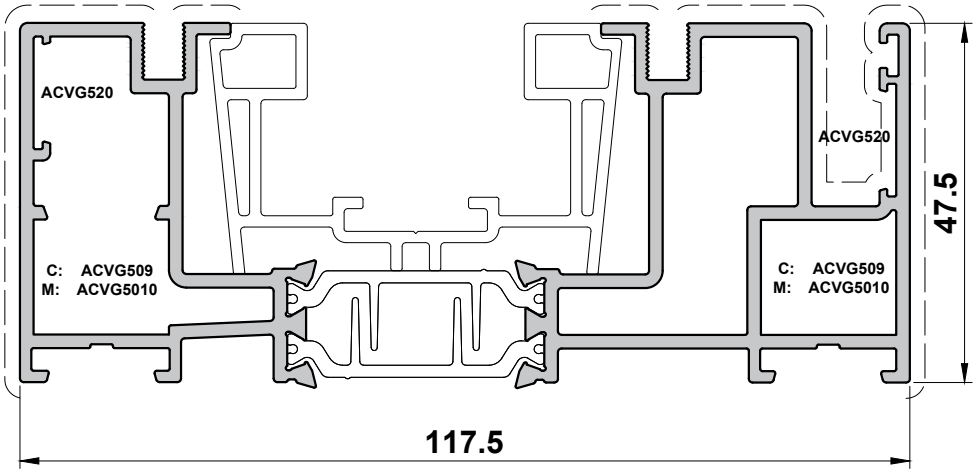

Primary Visible Side — — — — — — — — — — Secondary Visible Side ——— · ——— · ———

VG5008

Stepped Two Track Outer Frame

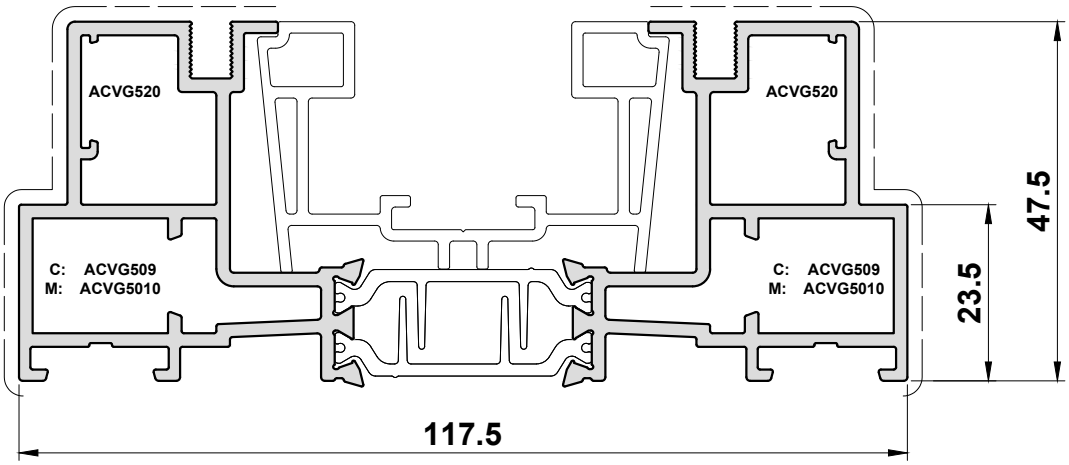

Primary Visible Side — — — — — — — — — Secondary Visible Side ——— · ——— · ———

VG5016 HYB

Two Track Outer Frame

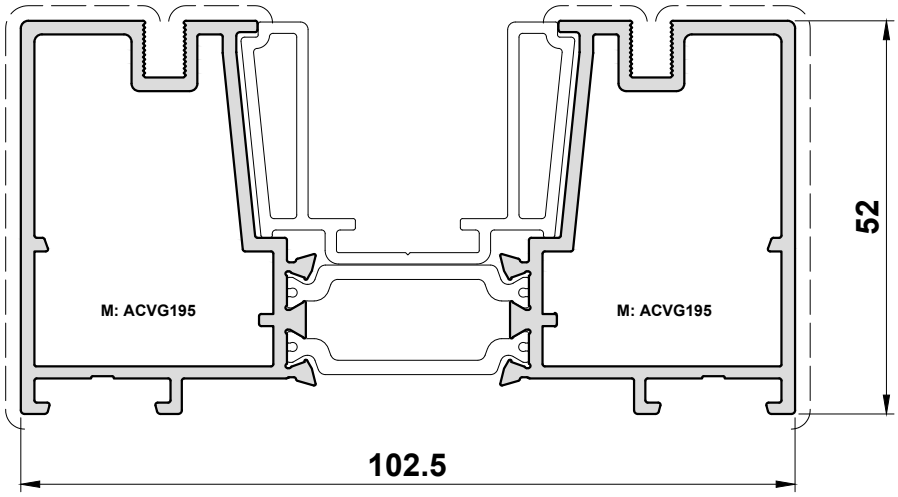

VG5017 HYB

Two Track Outer Frame with Upstand

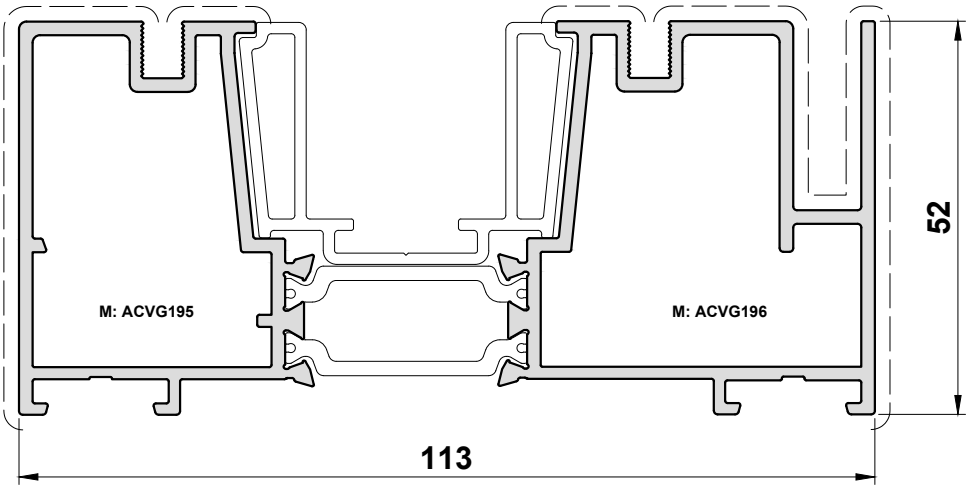

Primary Visible Side

Secondary Visible Side

VG5012
Three Track Outer Frame

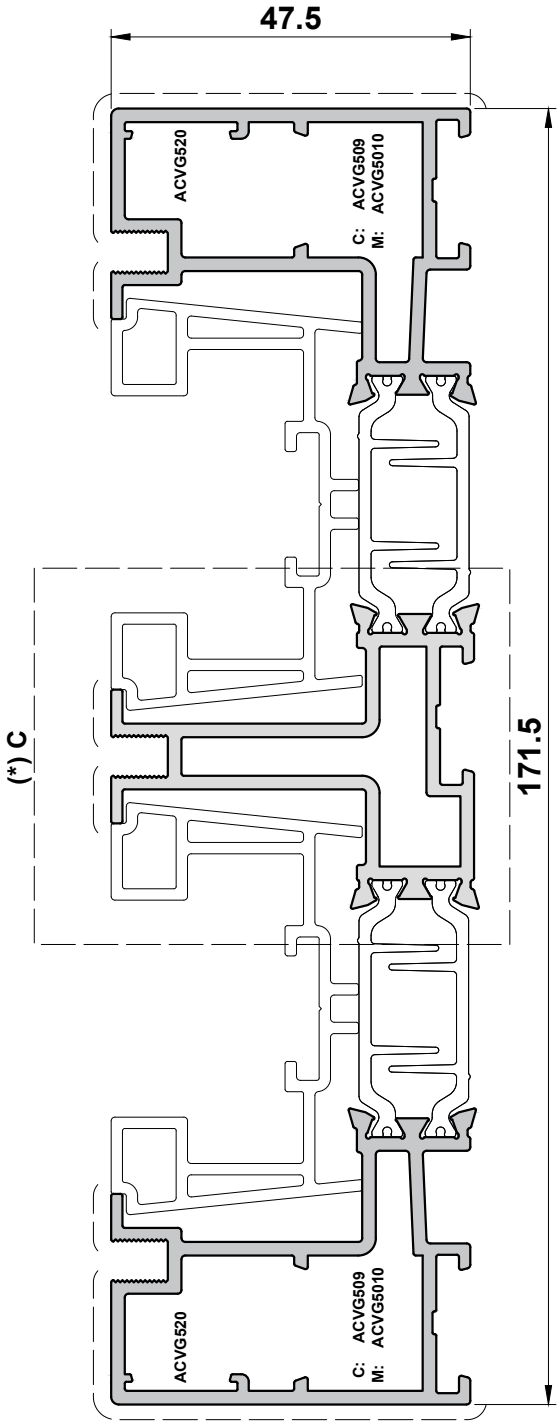

VG5013
Three Track Outer Frame with Upstand

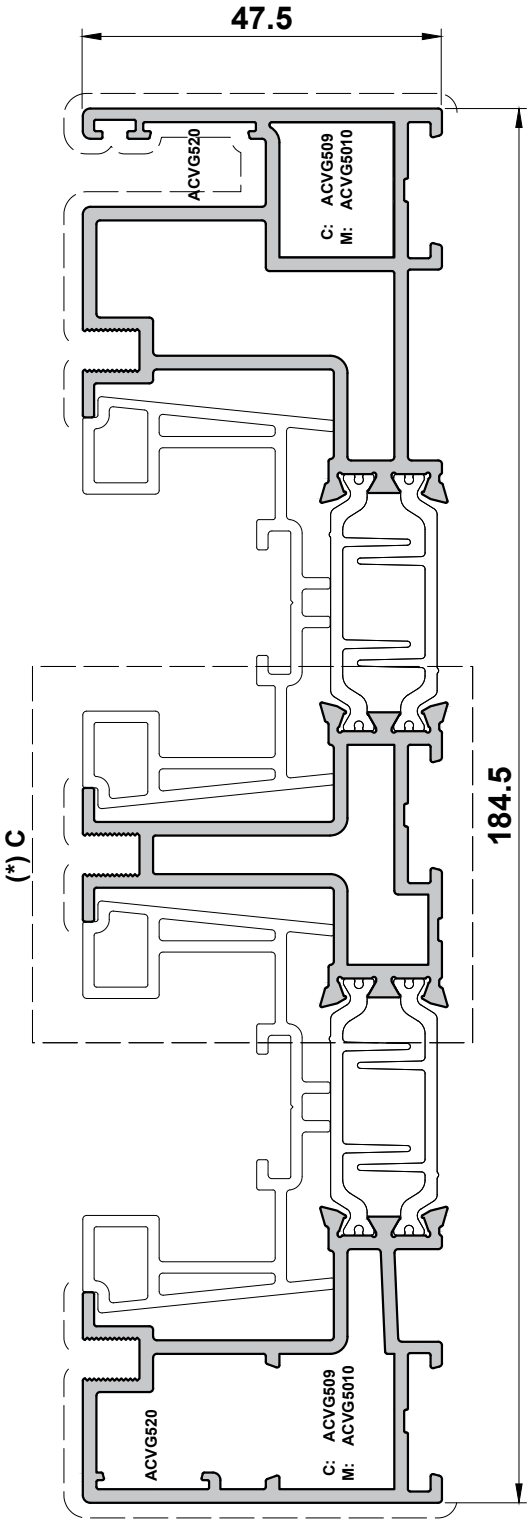

(*) Attention With Dual Colour : C = 9005 M

Primary Visible Side

Secondary Visible Side

VG5018 HYB

Three Track Outer Frame

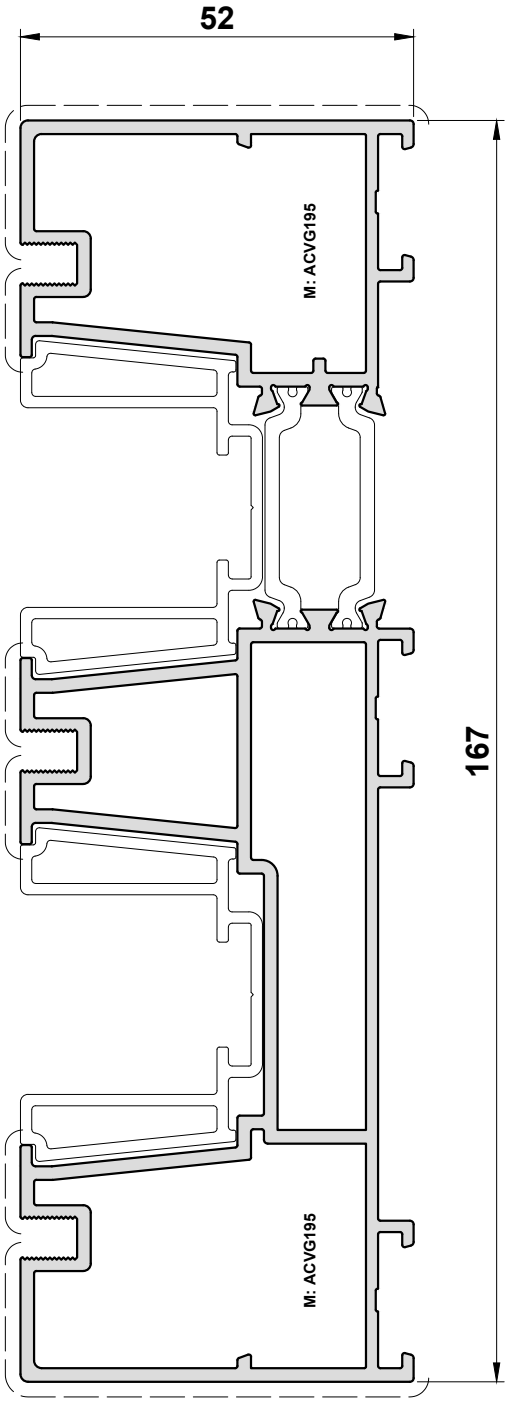

VG5019 HYB

Three Track Outer Frame with Upstand

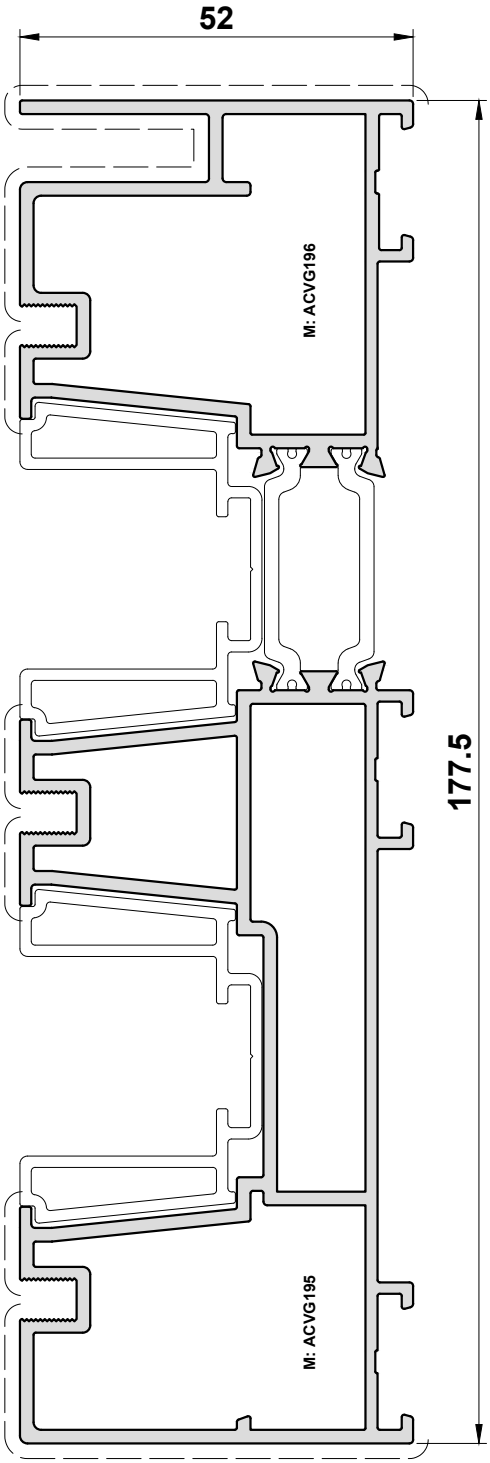

Primary Visible Side — — — — — — — — — — Secondary Visible Side ——— · ——— · ———

VG610
Mono Track Outerframe

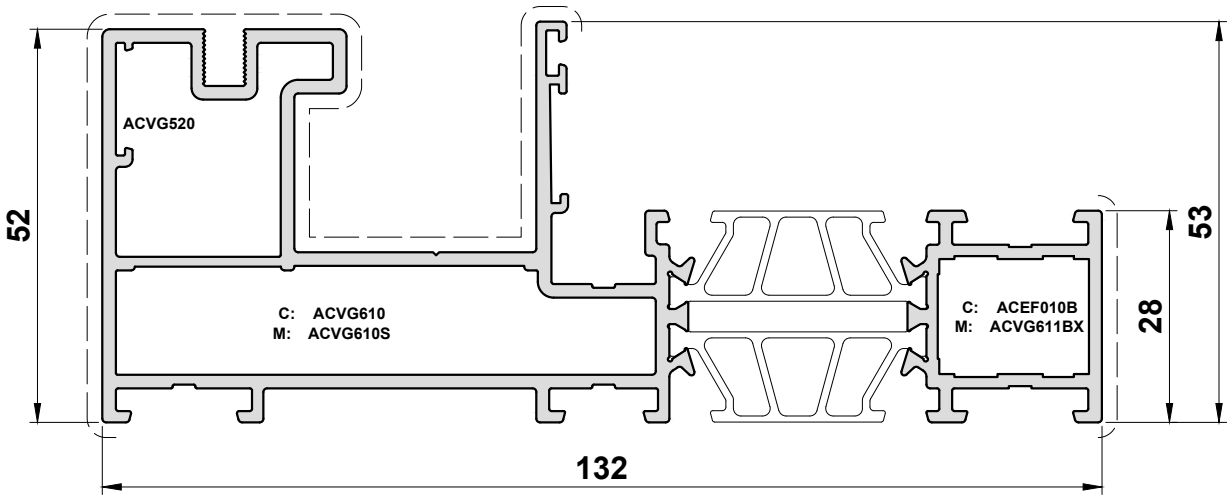

VG618
Mono Track Stepped Outerframe

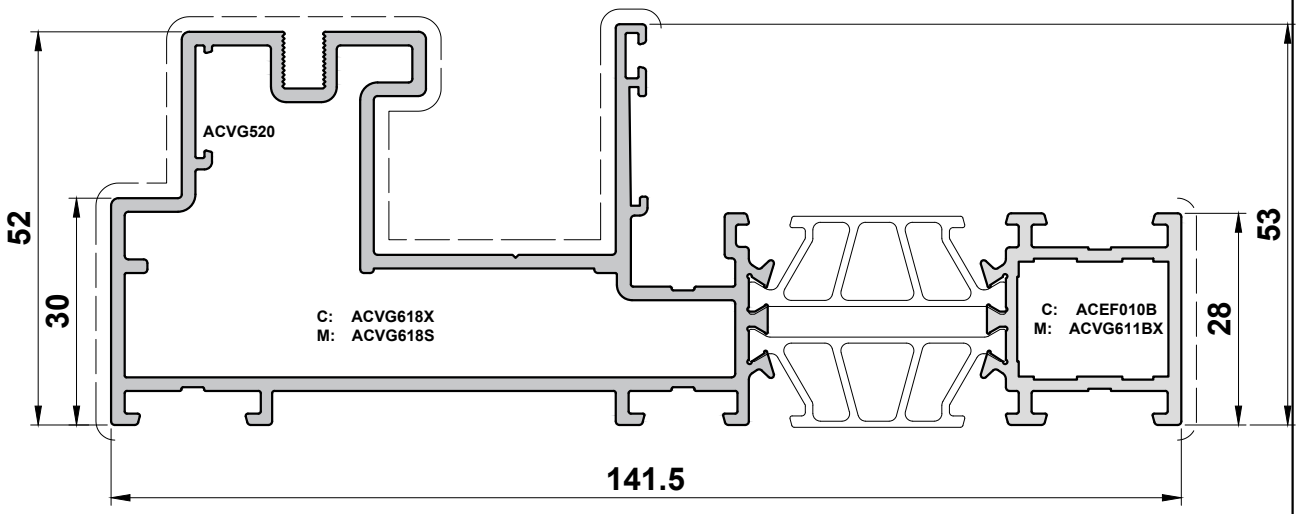

Primary Visible Side

Secondary Visible Side

VG538
Sash Transom

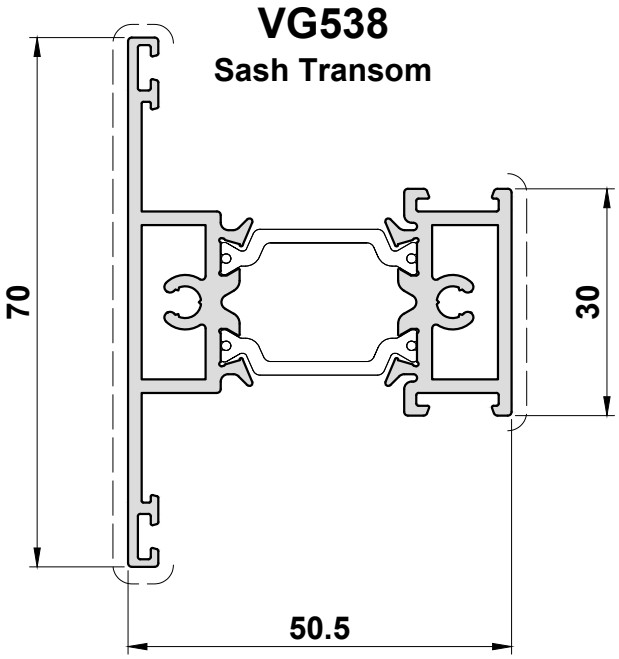

Primary Visible Side — — — — — — — — —   **Secondary Visible Side** ——— · ——— · ———

VG520

Sash

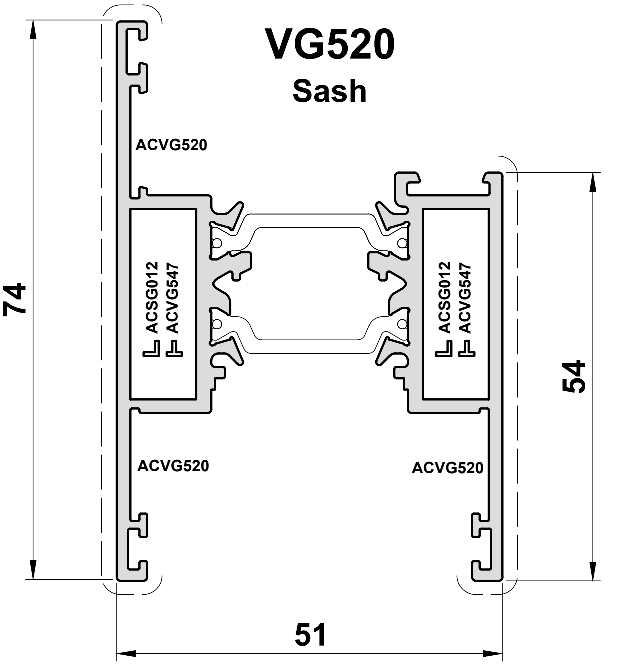

VG920 & VG920G*

Quick Glaze Sash

*Integrated Gasket

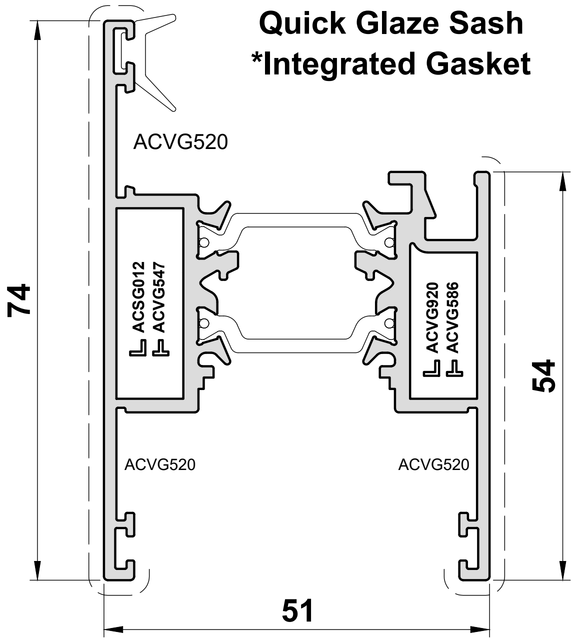

Primary Visible Side — — — — — — — — — — Secondary Visible Side ——— · ——— · ———

VG5023
Quick Glaze
Inner Sash

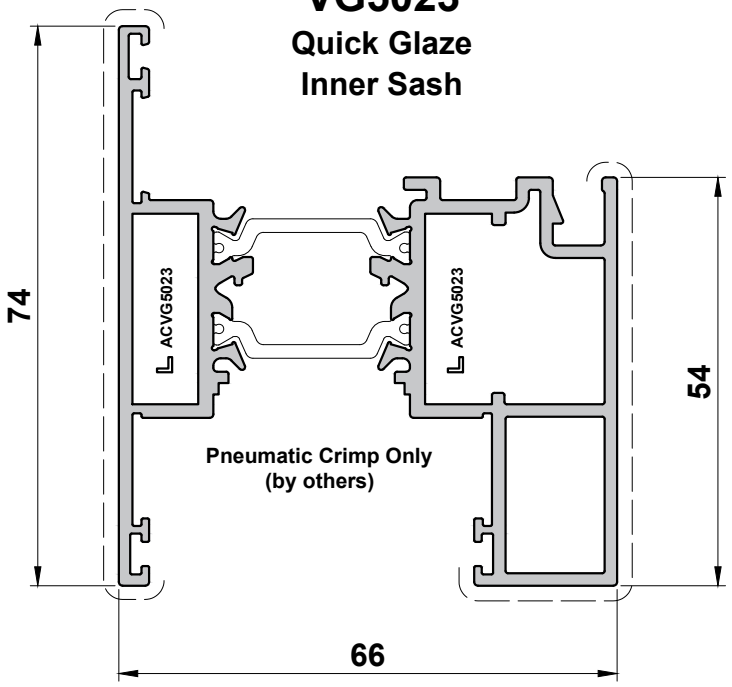

VG5024
Quick Glaze
Outer Sash

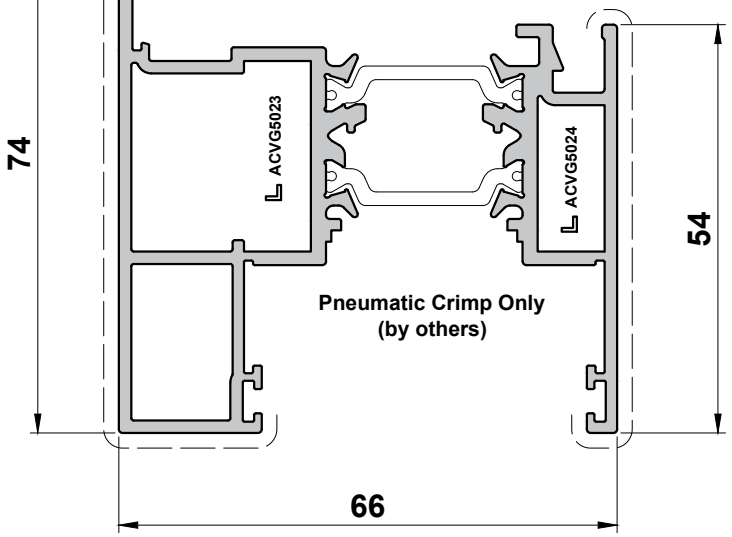

Primary Visible Side — — — — — — — — — Secondary Visible Side ——— · ——— · ———

VG521N
Lift & Slide Sash

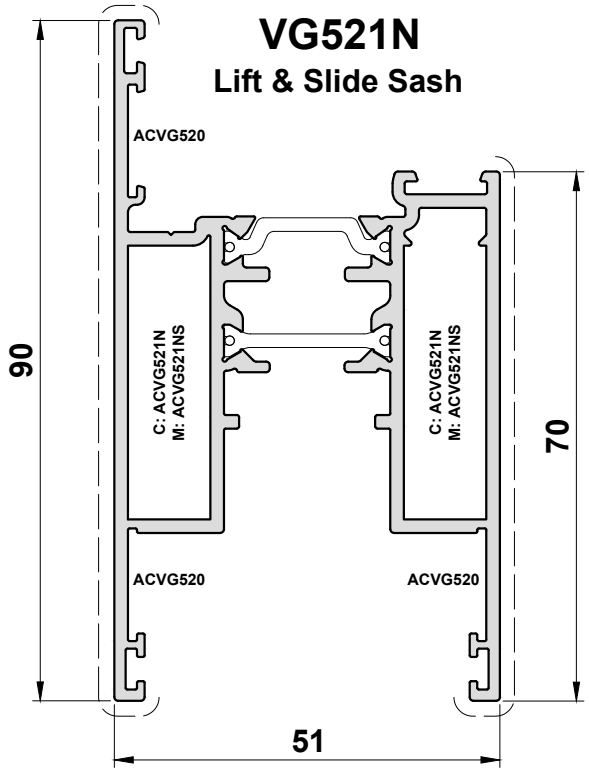

VG921
Quick Glaze
Lift & Slide Sash

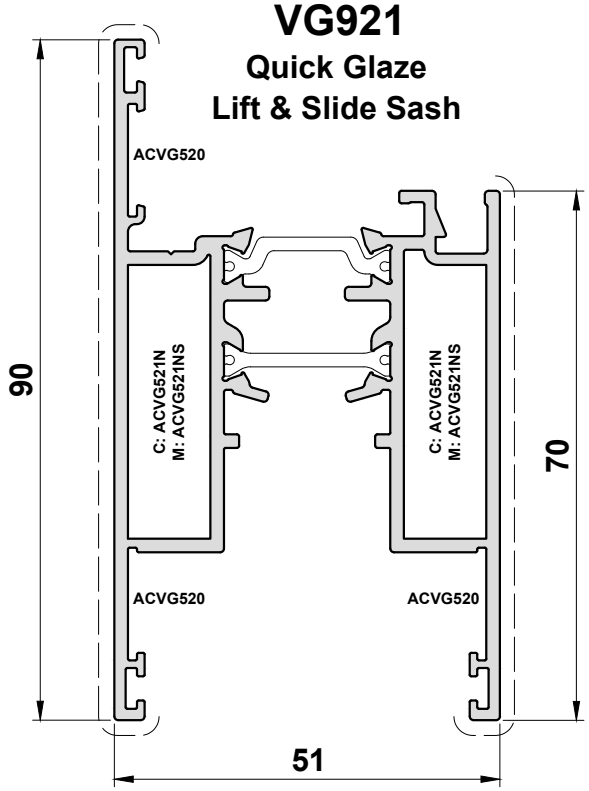

Primary Visible Side — — — — — — — — — Secondary Visible Side ——— · ——— · ———

VG620
Mono Rail Fixed Light for Sliding Door

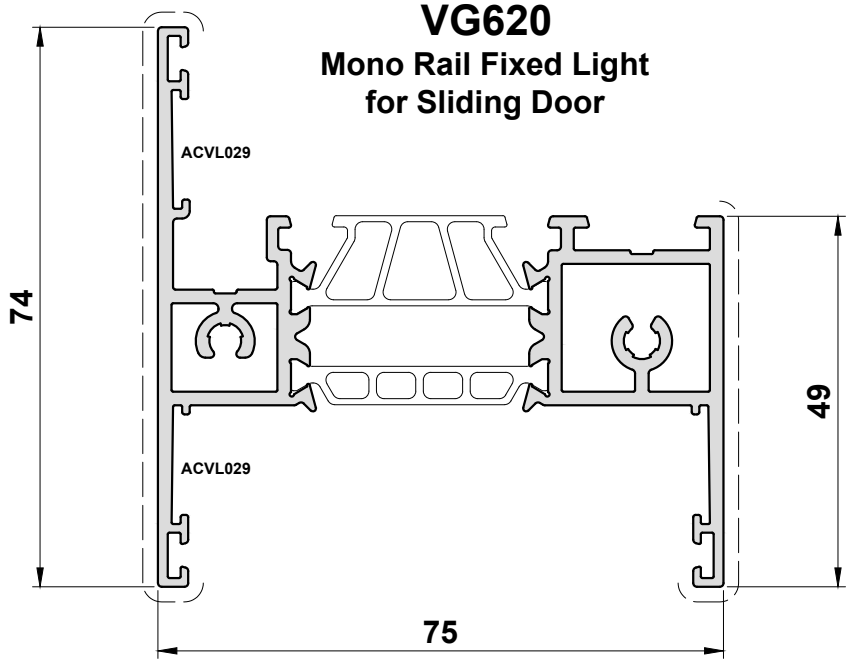

VG621
Mono Rail Fixed Light for Lift & Slide Door

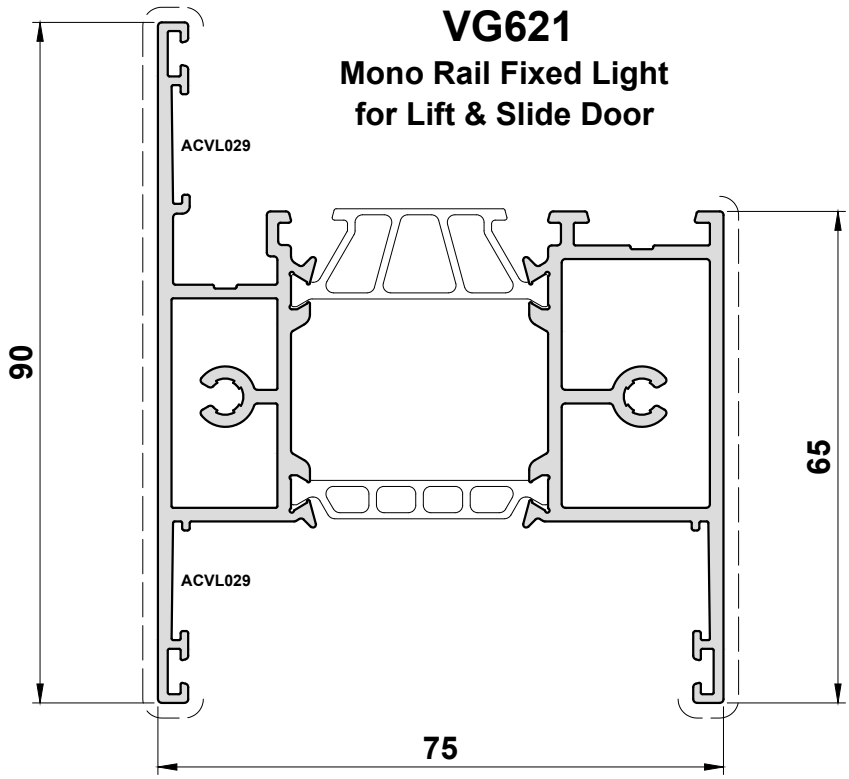

Primary Visible Side — — — — — — — — — — Secondary Visible Side ——— · ——— · ———

VG534
Reinforced Internal Slim Interlock

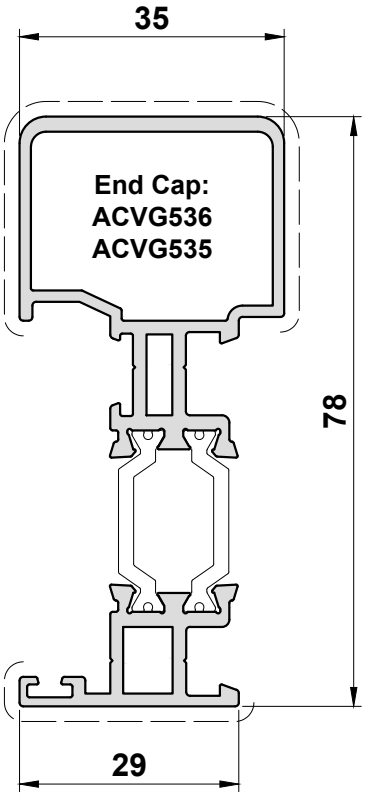

VG535
Internal Slim Interlock

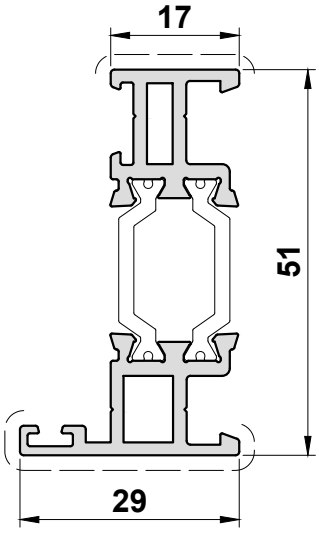

VG565
28-30mm Glazing Narrow Bead

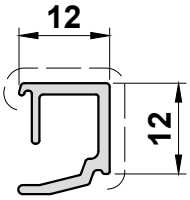

VG566
36-38mm Glazing Narrow Bead

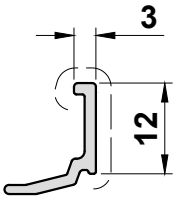

Primary Visible Side — — — — — — — — — Secondary Visible Side ——— · ——— · ———

VG536
External Slim Interlock

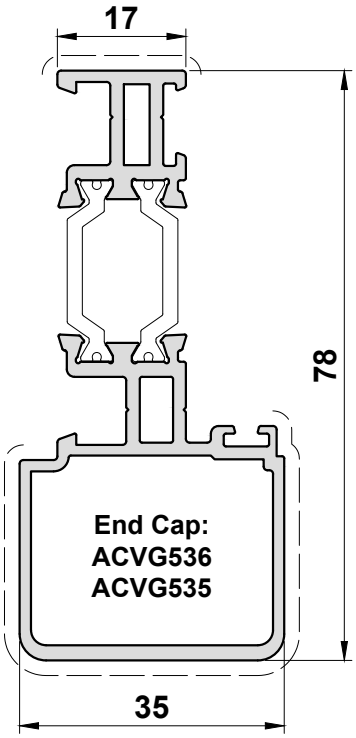

VG539
External Slim Reinforced Interlock

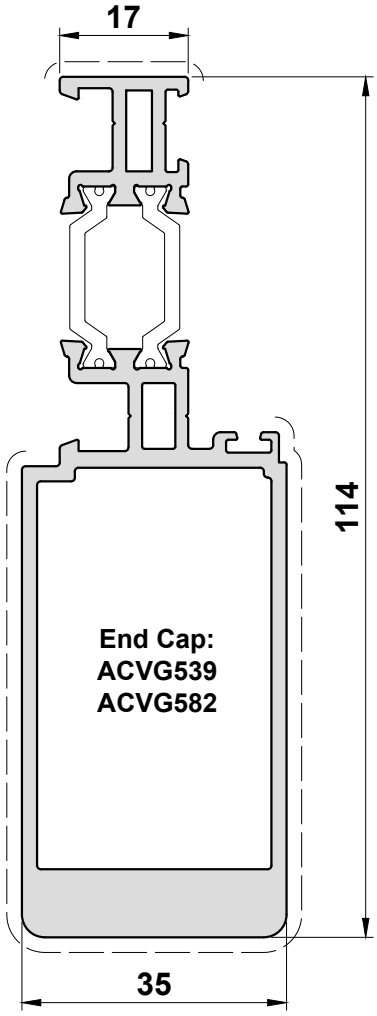

Primary Visible Side — — — — — — — — — Secondary Visible Side ——— · ——— · ———

VG590
20mm External Interlock

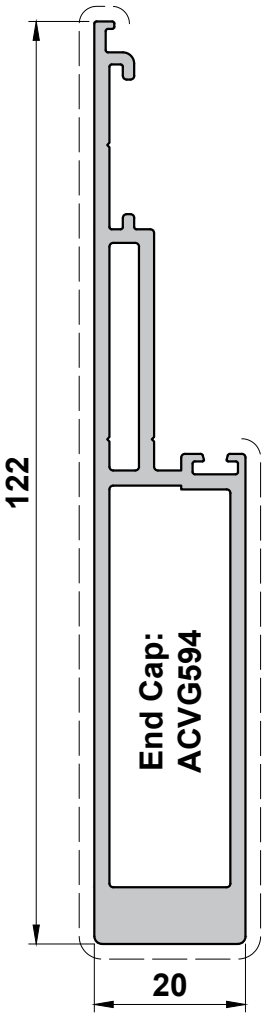

VG592
20mm Internal Interlock

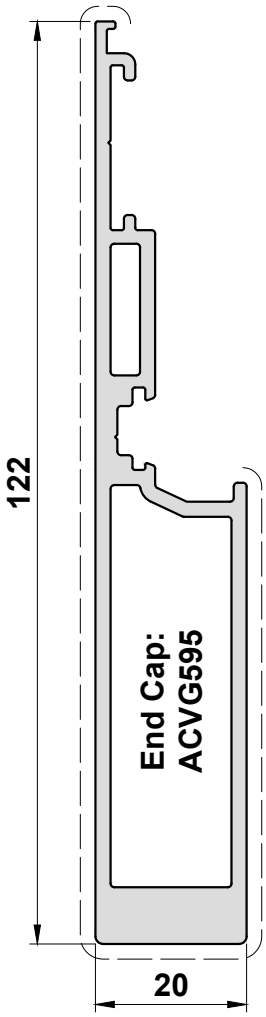

VG594
28-30mm Glazing Bead

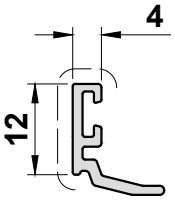

Primary Visible Side

Secondary Visible Side

VG586
Polyamide Weather Strip Carrier

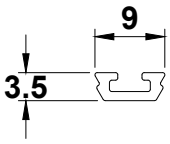

VG5051
Polyamide Interlock

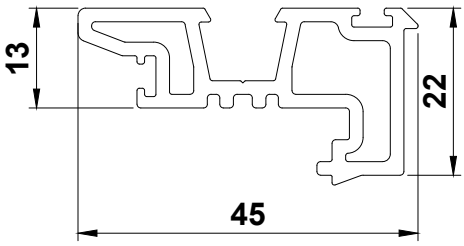

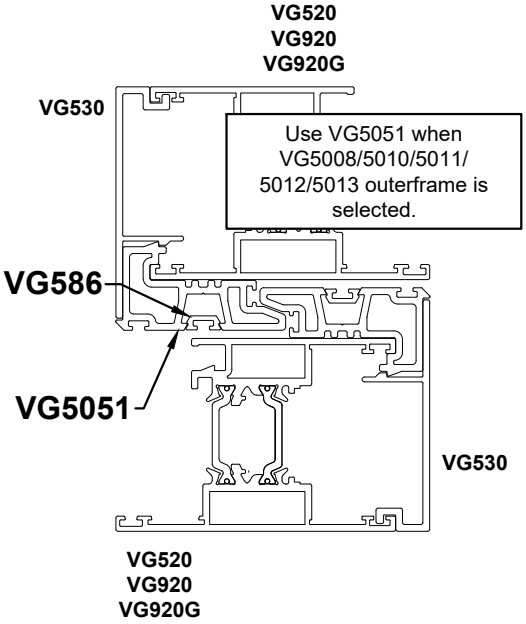

Primary Visible Side — — — — — — — — — Secondary Visible Side ——— · ——— · ———

VG553N
Lift & Slide PVC Interlock

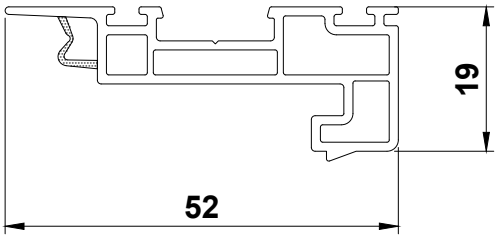

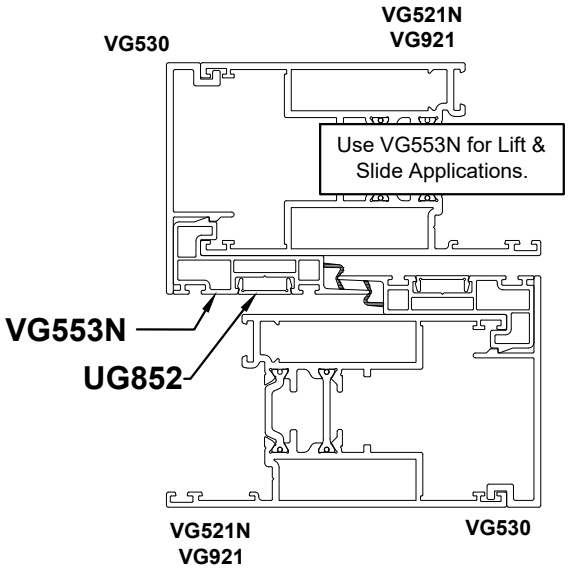

UG852
Infill Channel

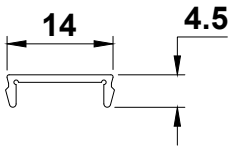

VG552N
Narrow PVC Interlock

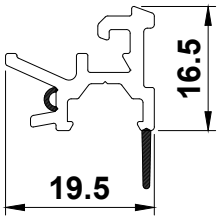

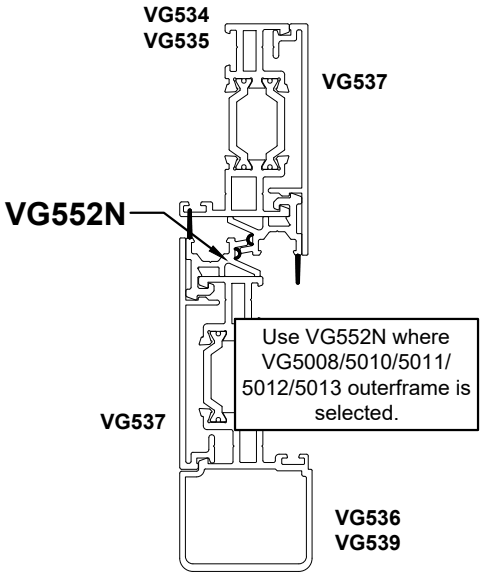

Primary Visible Side — — — — — — — — — Secondary Visible Side ——— · ——— · ———

VG596
Polyamide Interlock

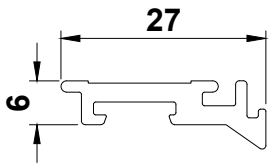

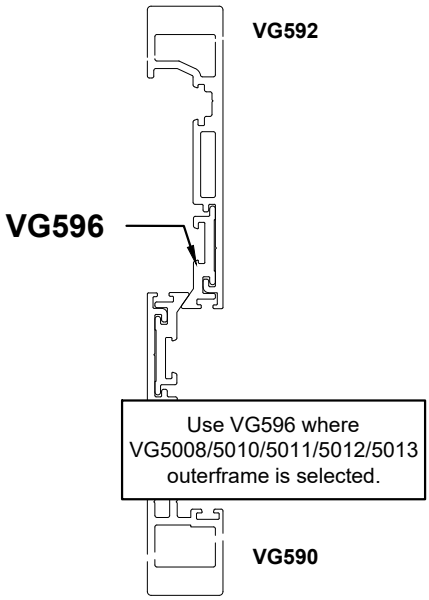

VG5052 HYB
Co-Ex Interlock

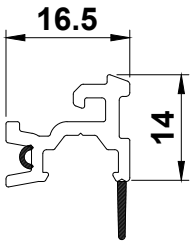

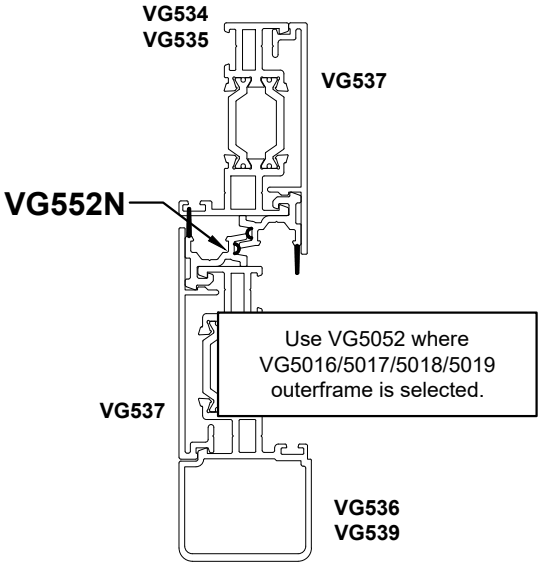

Primary Visible Side — — — — — — — — — — Secondary Visible Side ——— · ——— · ———

VG530
Interlock Cover

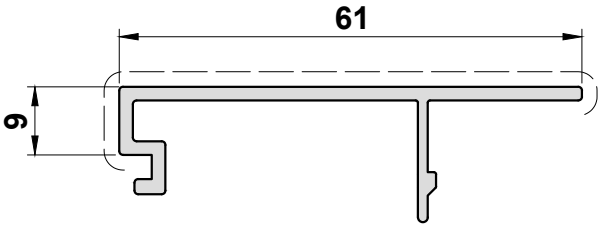

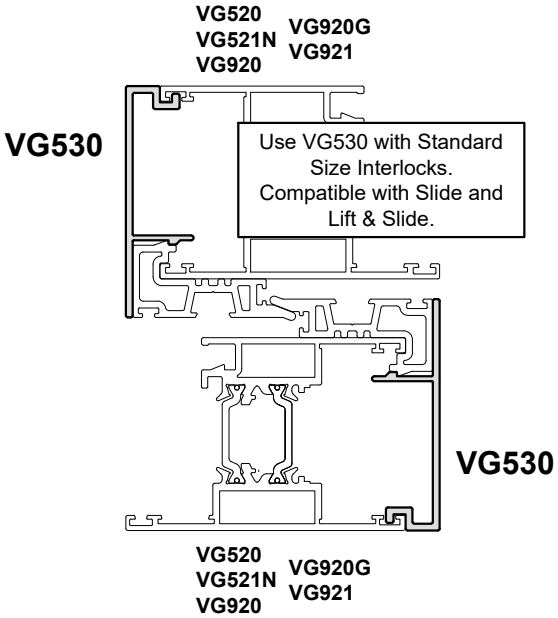

VG537
Slim Interlock Cover Cap

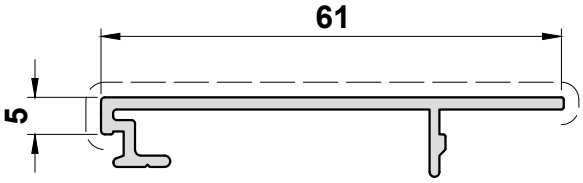

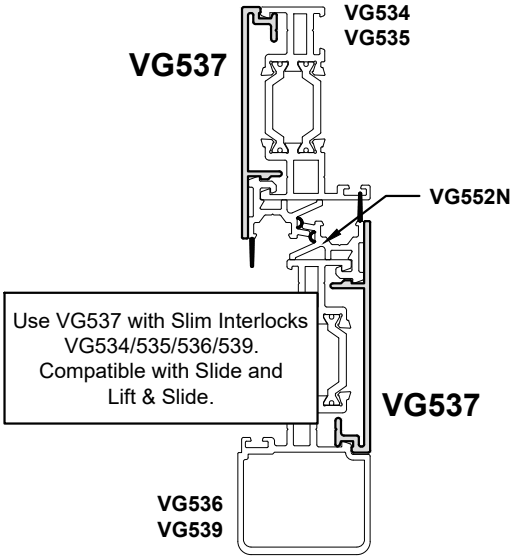

Primary Visible Side

Secondary Visible Side

VG5036 HYB

Interlock Cover

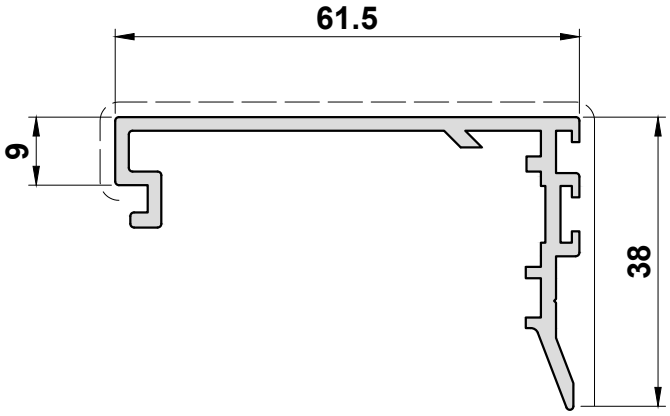

VG51 HYB

PVC Interlock

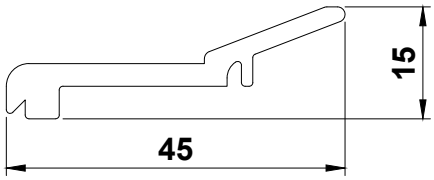

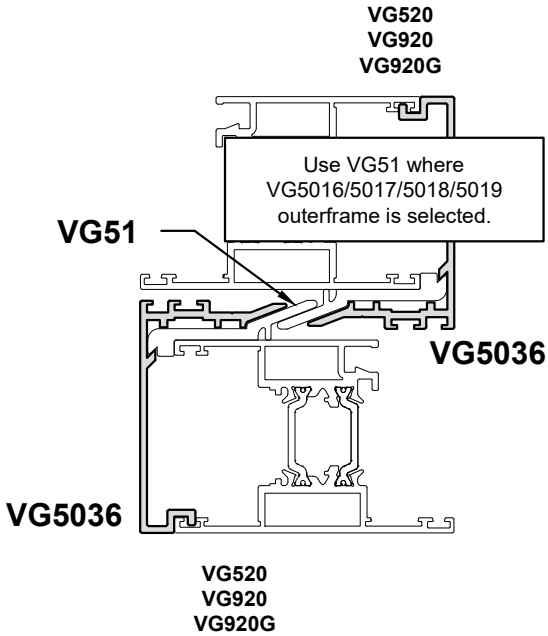

Primary Visible Side — — — — — — — — — Secondary Visible Side ——— · ——— · ———

VG632

Meeting Section

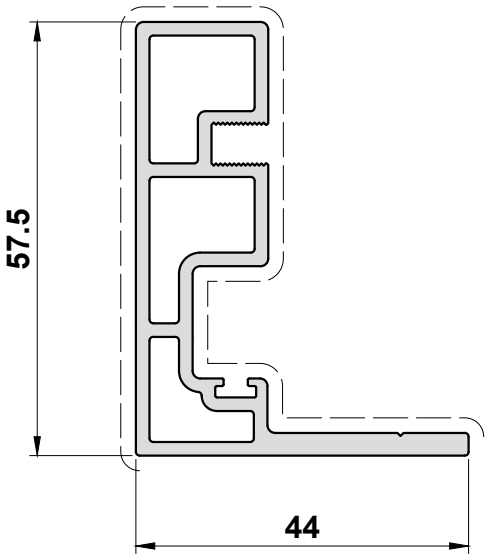

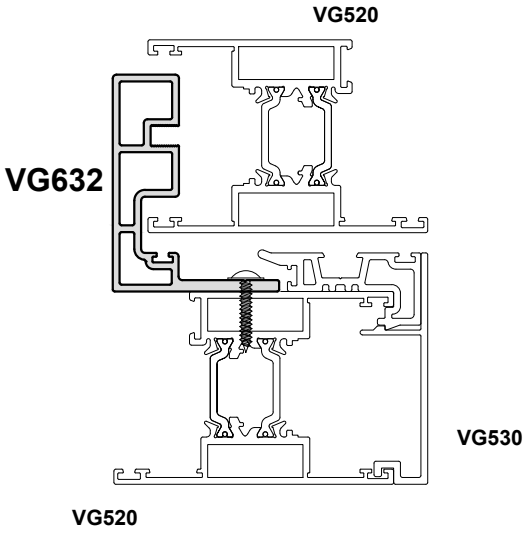

Primary Visible Side — — — — — — — — — Secondary Visible Side ——— · ——— · ———

VG630

Monorail Slide Interlock Cover Cap

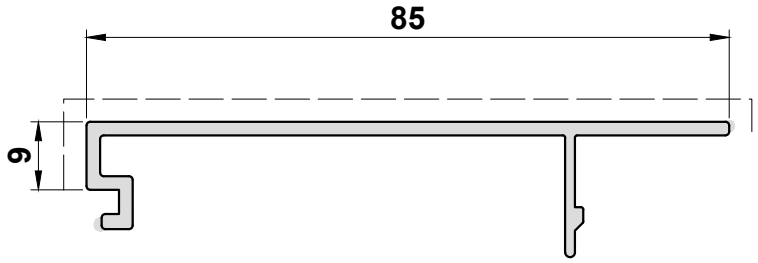

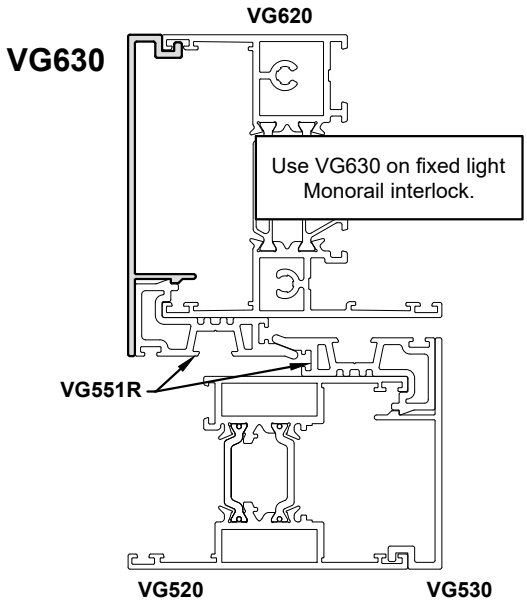

Primary Visible Side

Secondary Visible Side

VG540

Meeting Stile Adaptor
NOT For Lift & Slide

Use VG540 where VG5016/5017/5018/5019 outerframe is selected.

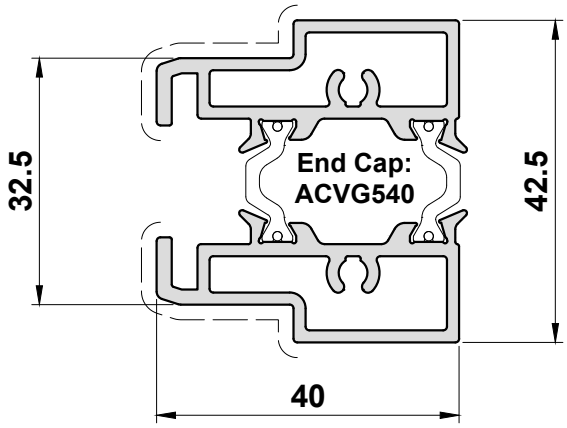

VG541

Reinforced Meeting Stile Adaptor
NOT For Lift & Slide

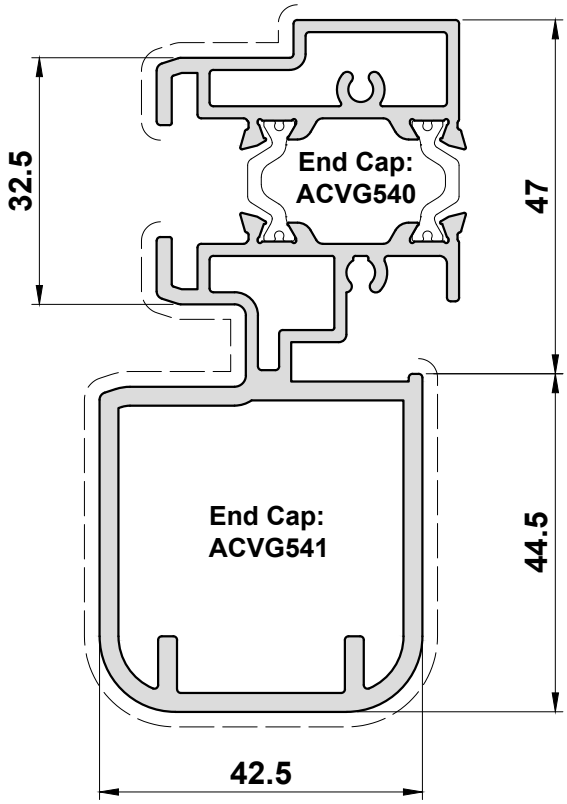

Primary Visible Side — — — — — — — — — — Secondary Visible Side ——— · ——— · ———

VG5040

Meeting Stile

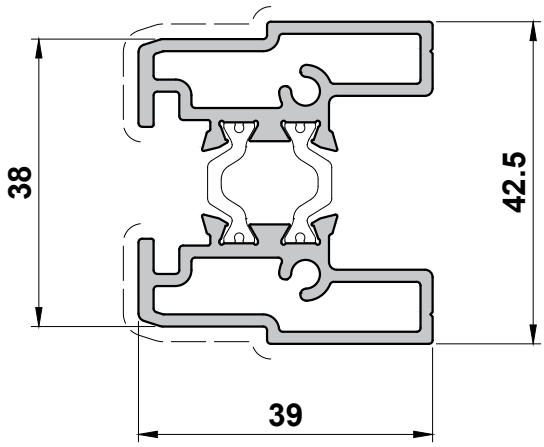

End Cap: ACVG5040

VG5042

Meeting Stile with Rebate

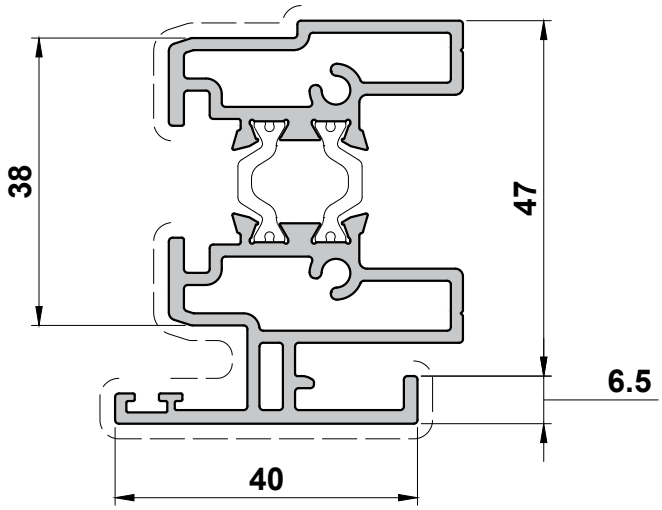

End Cap: ACVG5040

Primary Visible Side — — — — — — — — — — Secondary Visible Side ——— · ——— · ———

VG542
Rebated Meeting Stile Adaptor

End Cap: ACVG543

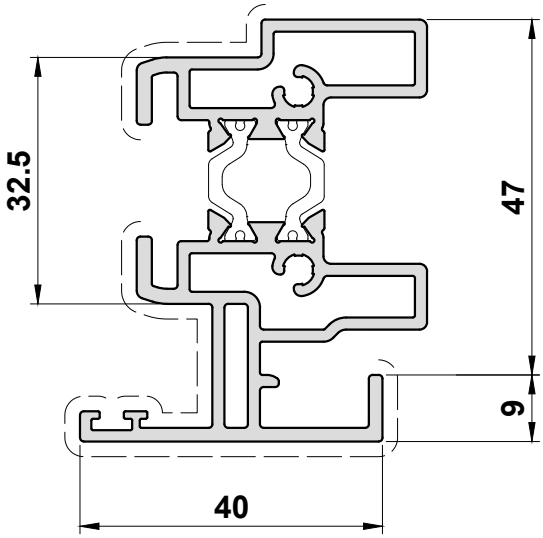

VG549
Rebated Meeting Stile Adaptor for BT Lock

End Cap: ACVG569

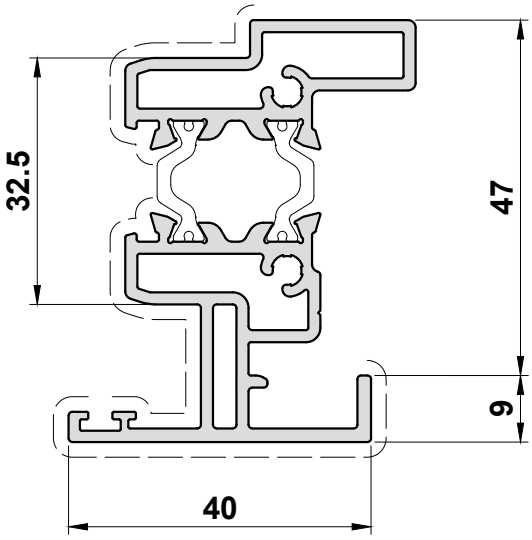

Primary Visible Side — — — — — — — — — — Secondary Visible Side ——— · ——— · ———

VG580
Floating Corner Post
Lock Carrier

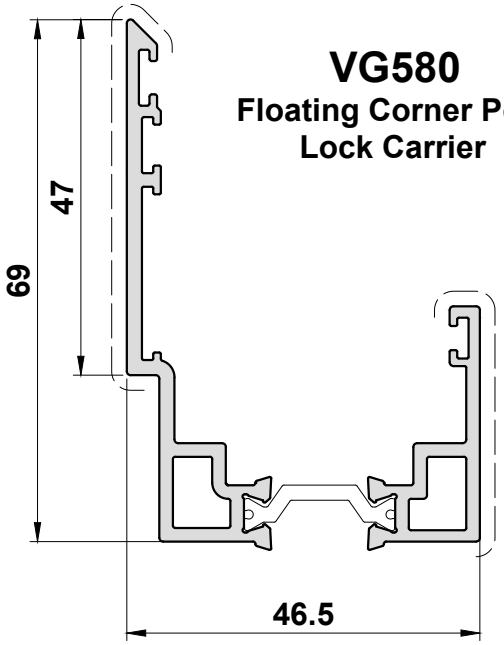

VG581
Floating Corner Post
90° Meeting Stile

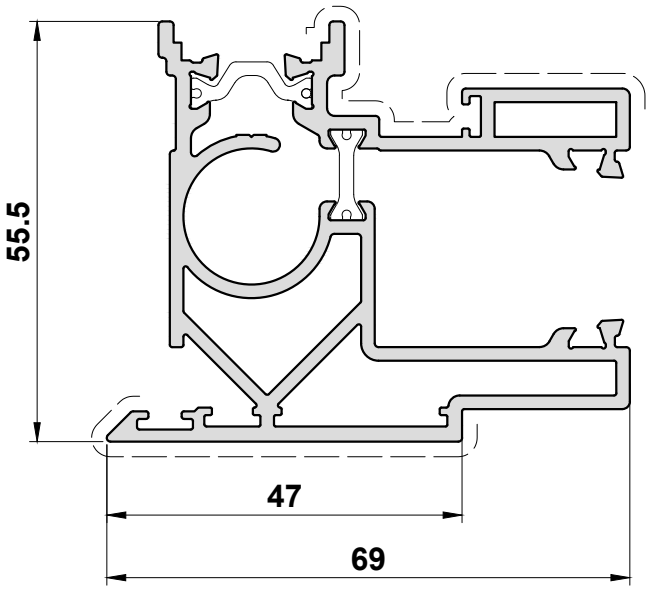

Primary Visible Side — — — — — — — — — — Secondary Visible Side ——— · ——— · ———

UN500
Cover Cap

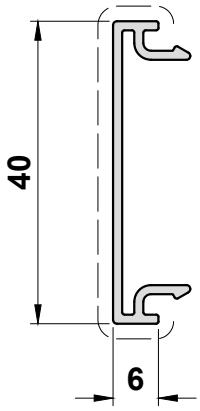

End Cap:
ACUN500

UN510
Reinforcement Profile

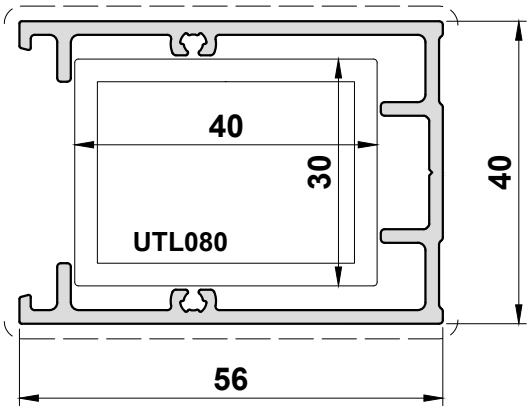

VG533
VG532 Cover Cap

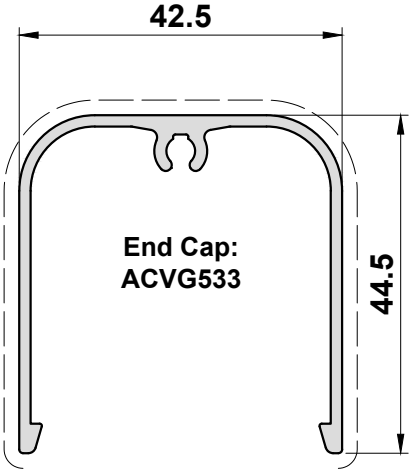

End Cap:
ACVG533

VG532
Reinforcing Section

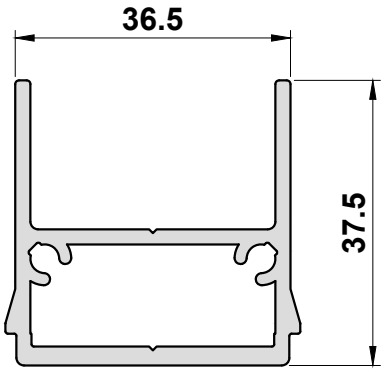

Primary Visible Side — — — — — — — — — Secondary Visible Side ——— · ——— · ———

VG5014
Flat Two Track Cover

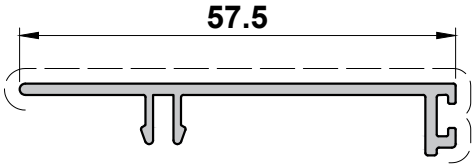

VG5074
Sloped Two Track Cover

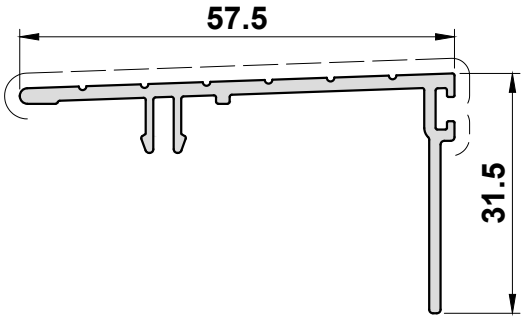

VG5015
Flat Three Track Cover

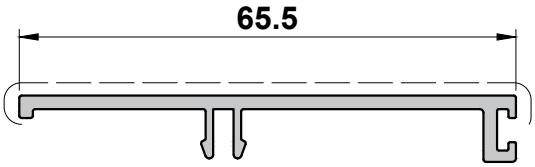

VG5075
Sloped Three Track Cover

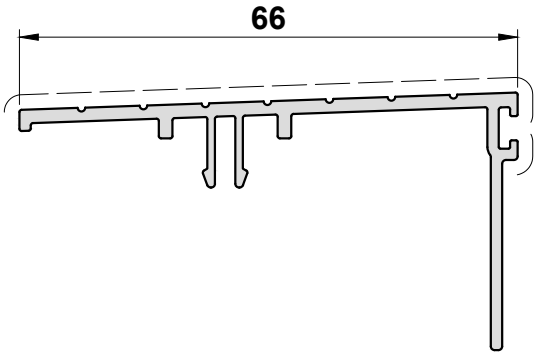

Primary Visible Side — — — — — — — — — Secondary Visible Side ——— · ——— · ———

VG5154 HYB

Sloped Two Track Cover

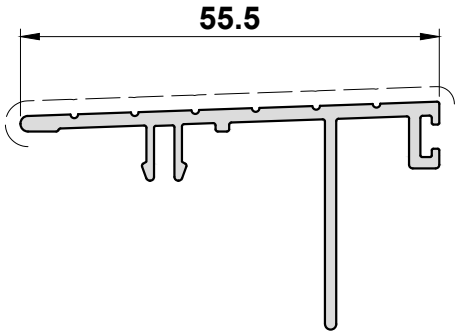

VG5155 HYB

Sloped Three Track Cover

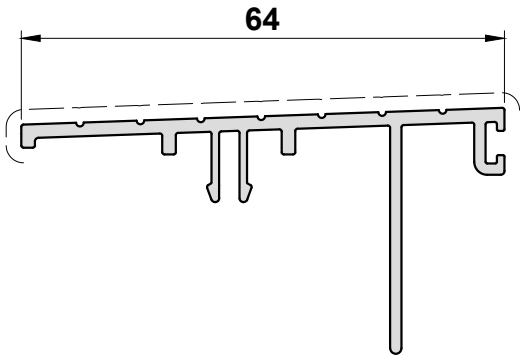

Primary Visible Side — — — — — — — — — — Secondary Visible Side ——— · ——— · ———

VG615
Internal Jamb/Head Cover

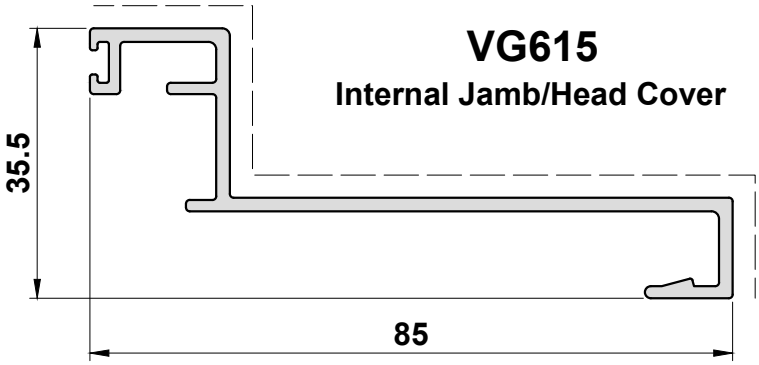

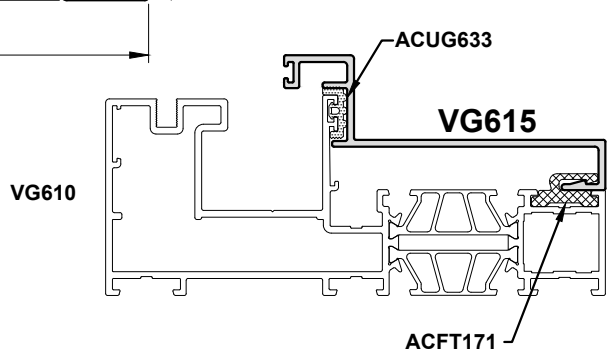

VG616
Internal Threshold Cover

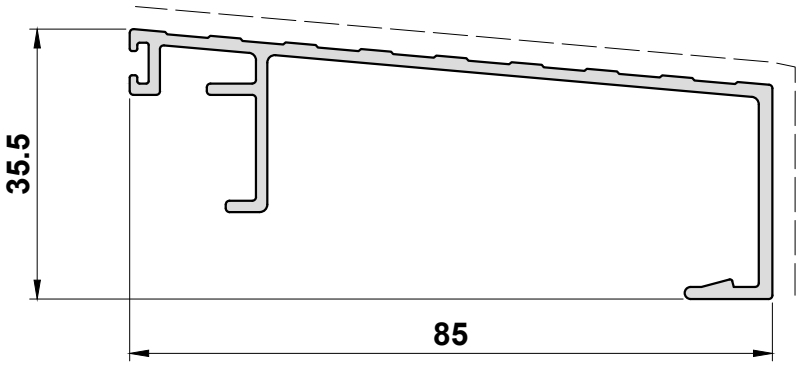

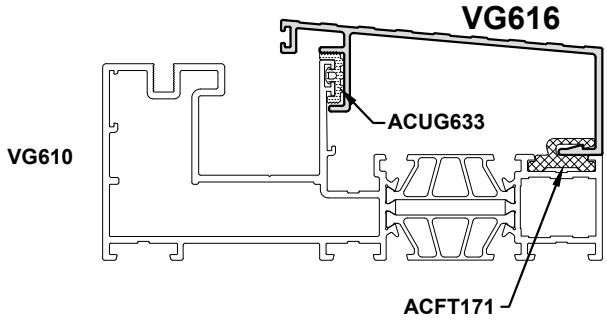

Primary Visible Side — — — — — — — — — Secondary Visible Side ——— · ——— · ———

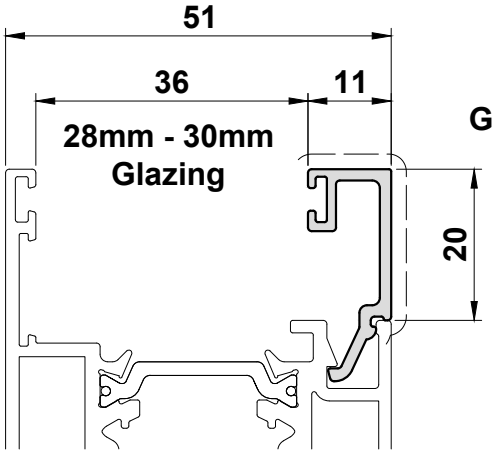

VG960
Glazing Bead

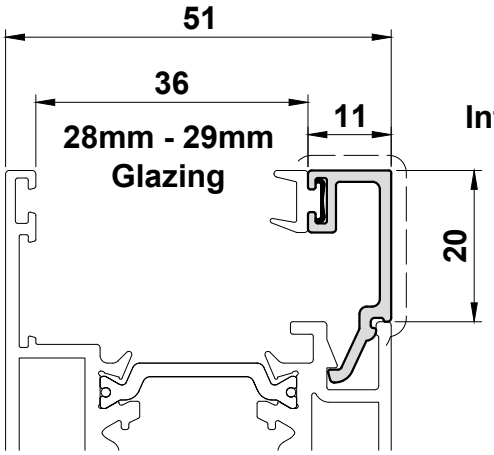

VG960G
Bead with Integrated Gasket

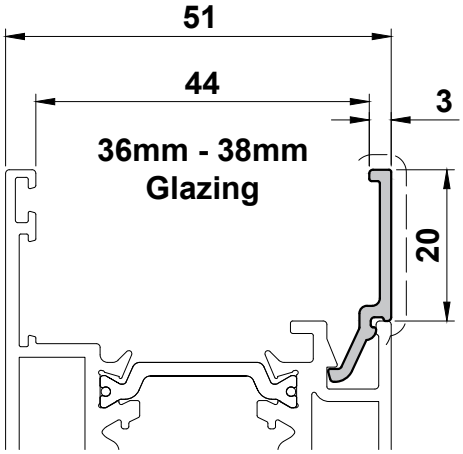

VG964
Glazing Bead

Primary Visible Side

Secondary Visible Side

VG430

Single Glazing Bead

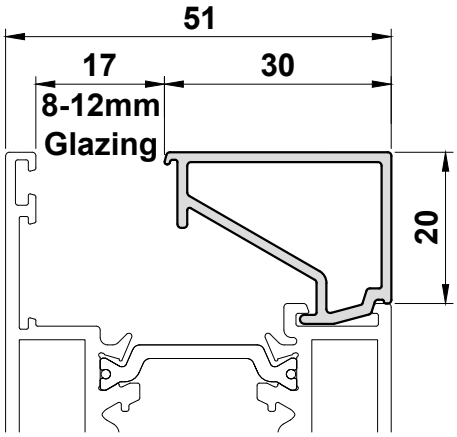

VG416

Glazing Bead

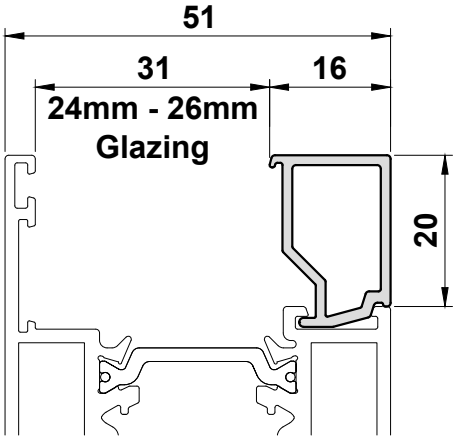

VG560

Glazing Bead

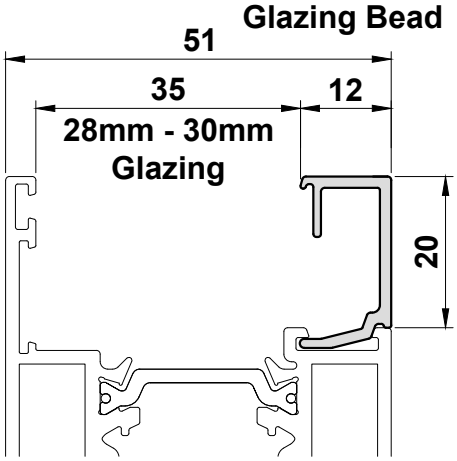

VG408

Glazing Bead

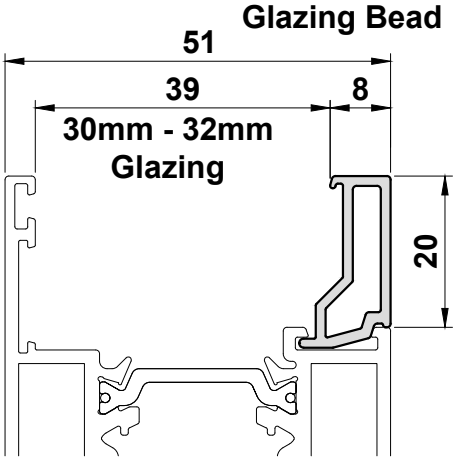

VG561

Glazing Bead

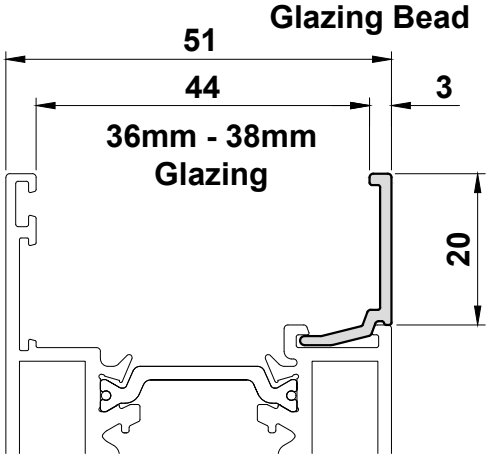

Primary Visible Side — — — — — — — — — Secondary Visible Side ——— · ——— · ———

GL724
Mono Rail 38mm - 40mm Glazing Bead

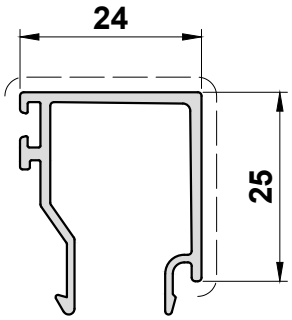

GL728
Mono Rail 36mm - 37mm Glazing Bead

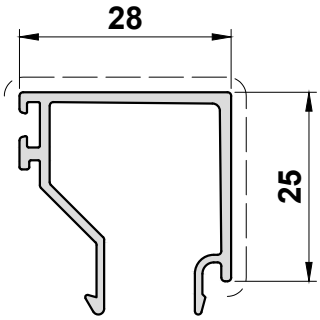

GL732
Mono Rail 32mm - 34mm Glazing Bead

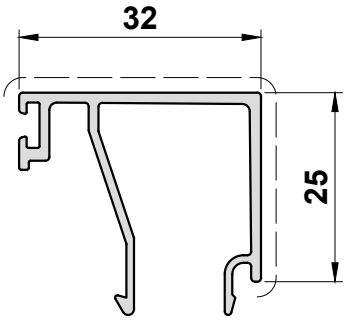

GL736
Mono Rail 28mm - 30mm Glazing Bead

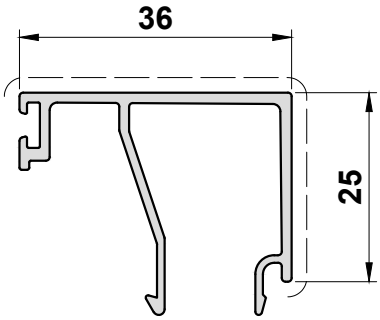

GL740
Mono Rail 24mm - 26mm Glazing Bead

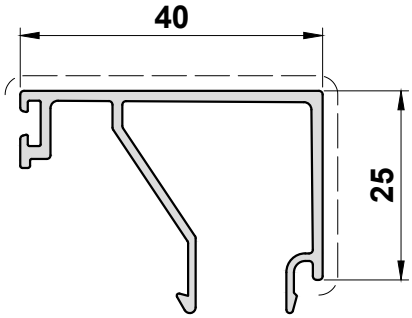

Primary Visible Side — — — — — — — — — — Secondary Visible Side — — — — — — — — — — — — — — — —

VG52
PVC Infill

VG53
Stainless Steel Track

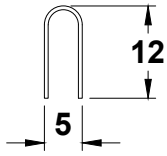

PCX47
PVC Infill

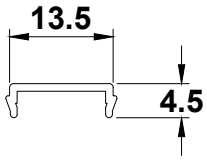

UTL027
Jamb Insert

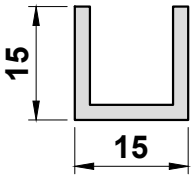

VL72
Weather Drip

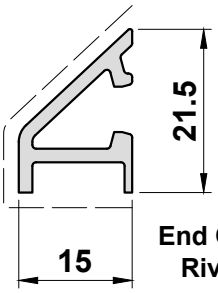

End Caps: ACVL059
Rivets: ACVL061

VL76
(UN075)
Weather Drip

End Caps: ACUN075
Rivets: ACVL061

Primary Visible Side

Secondary Visible Side

VG12
Frame Surround

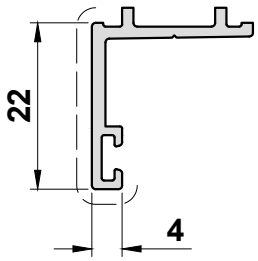

UN010
Frame Upstand

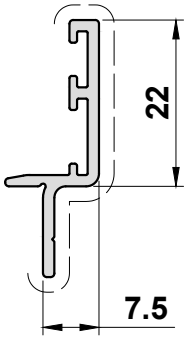

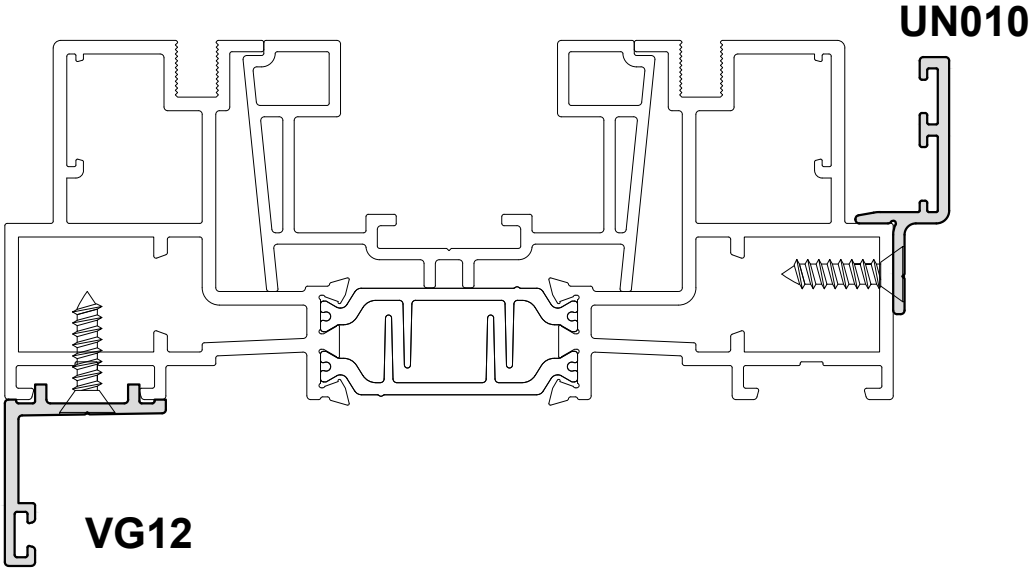

Primary Visible Side — — — — — — — — — — Secondary Visible Side ——— · ——— · ———

VG671
Coupler

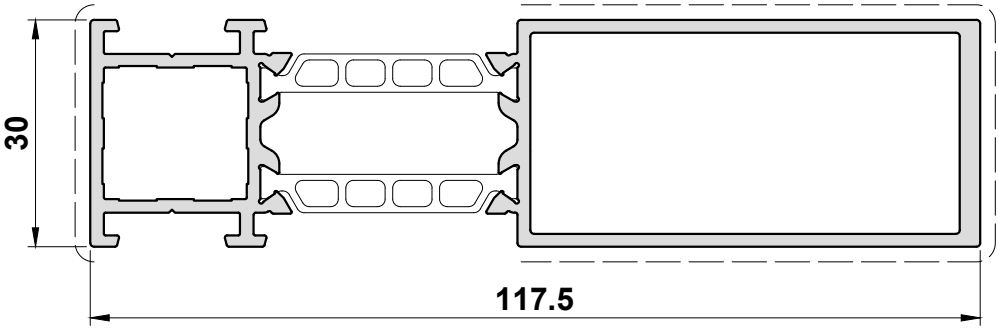

VG681
Coupler

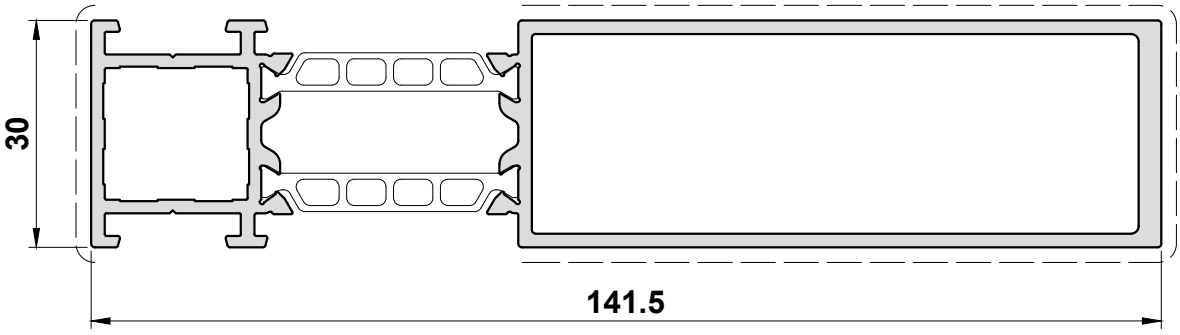

VL75
(UN151)
Coupling Piece

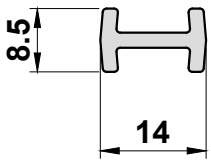

Primary Visible Side — — — — — — — — — Secondary Visible Side ——— · ——— · ———

VG674

90° Corner Post

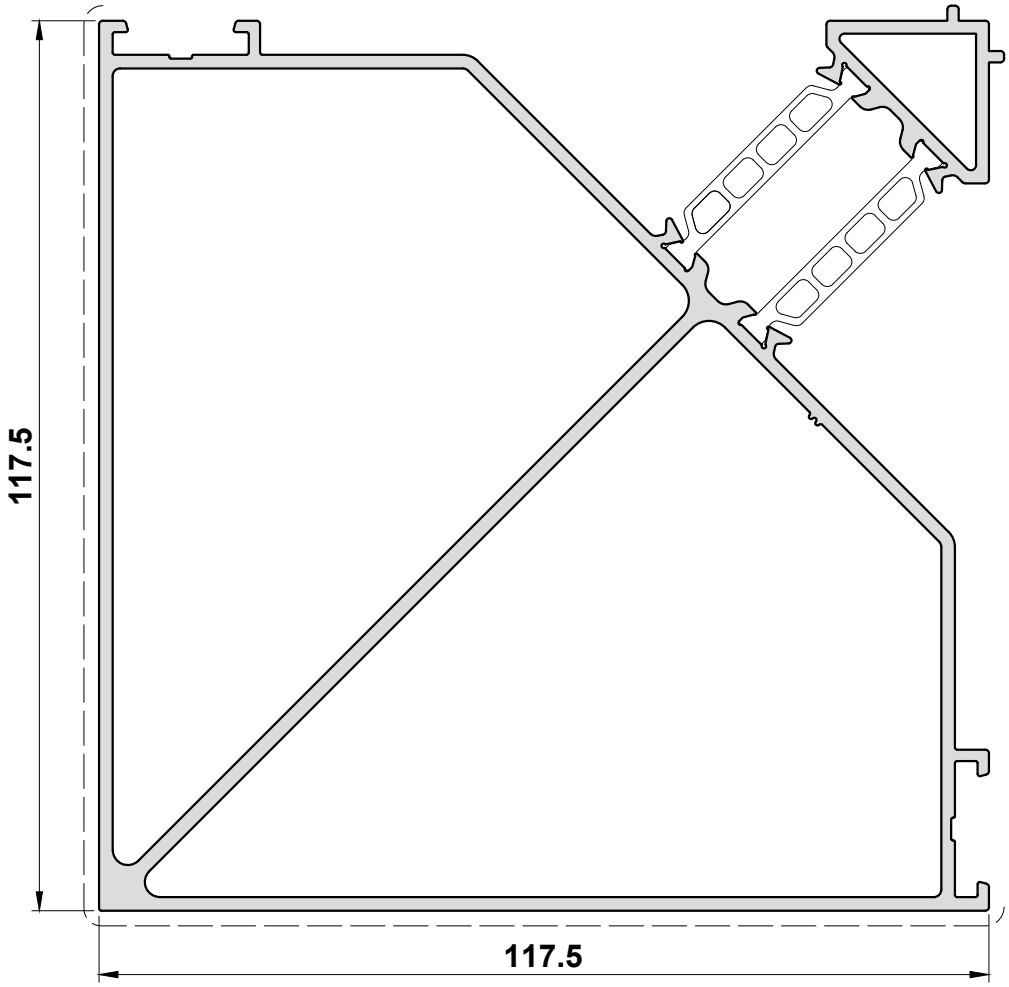

Primary Visible Side

Secondary Visible Side

VG5186 HYB

Head Extension for VG5016

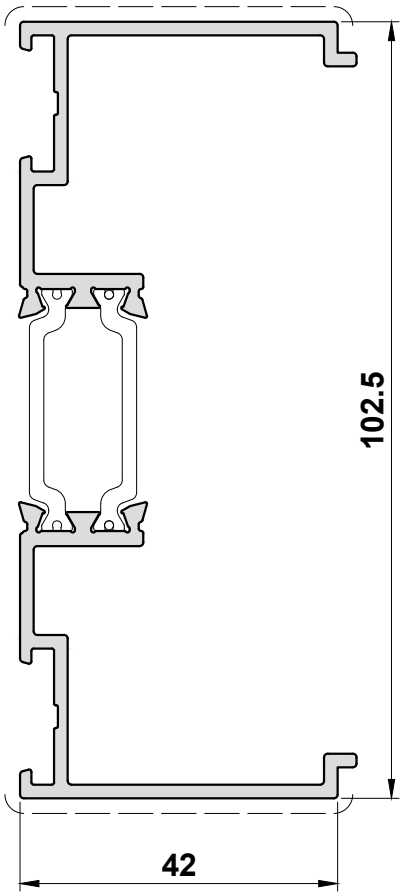

VG5058

VG5010 Two Track Head Extension

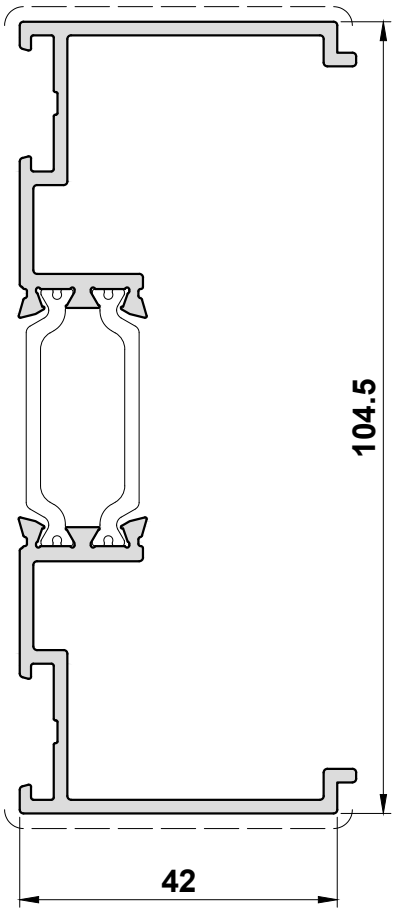

Primary Visible Side

Secondary Visible Side

VG5187 HYB

Head Extension for VG5017

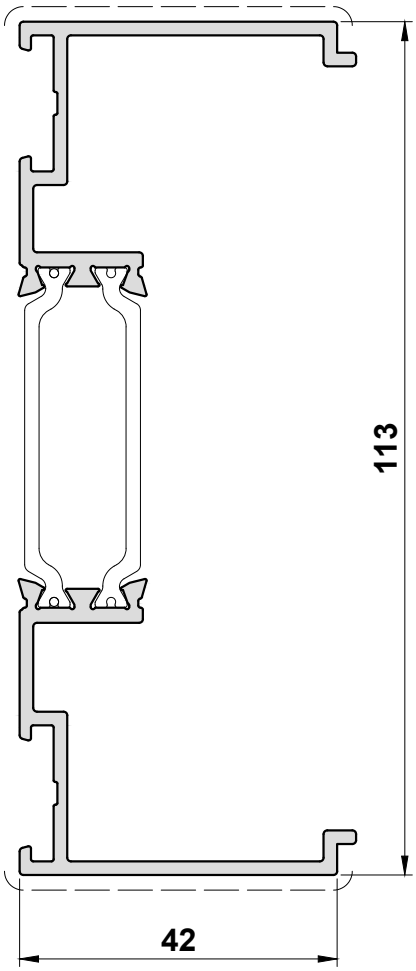

VG572

VG5008 Track Head Extension

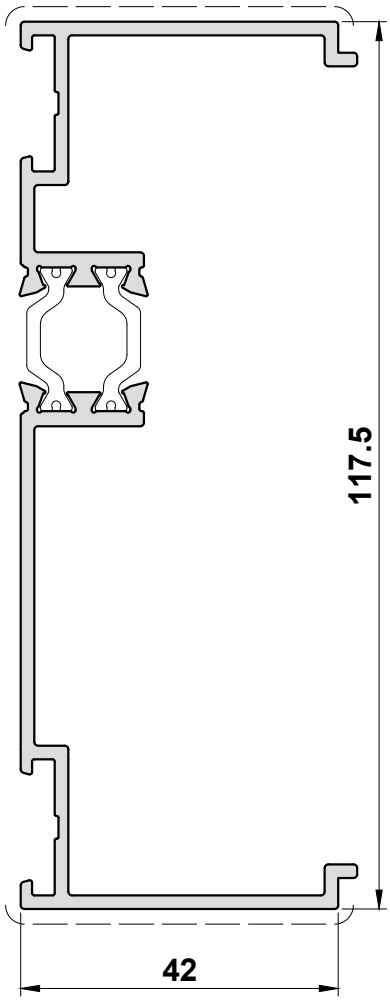

Primary Visible Side

Secondary Visible Side

VG5188 HYB

Head Extension for VG5018

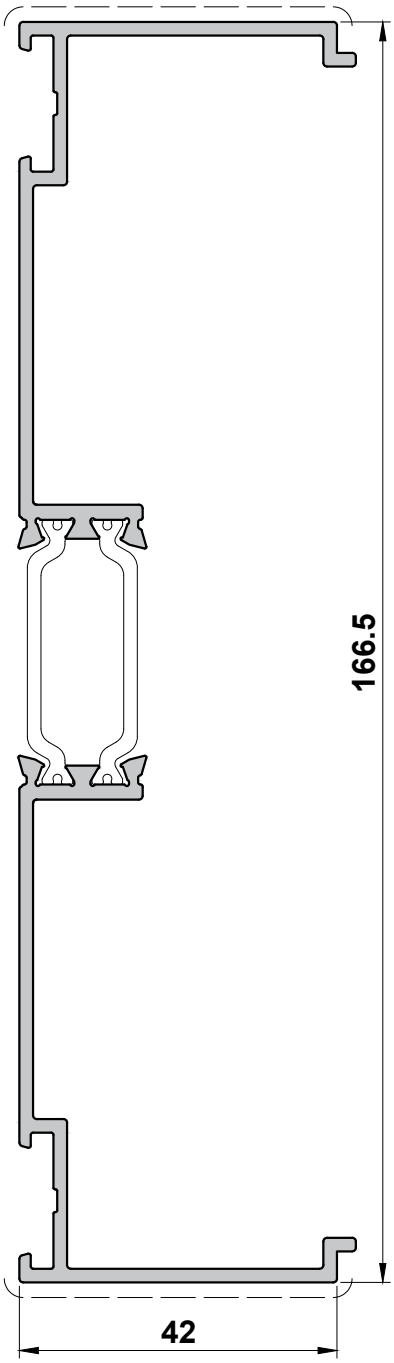

VG5059

VG5012 Three Track Head Extension

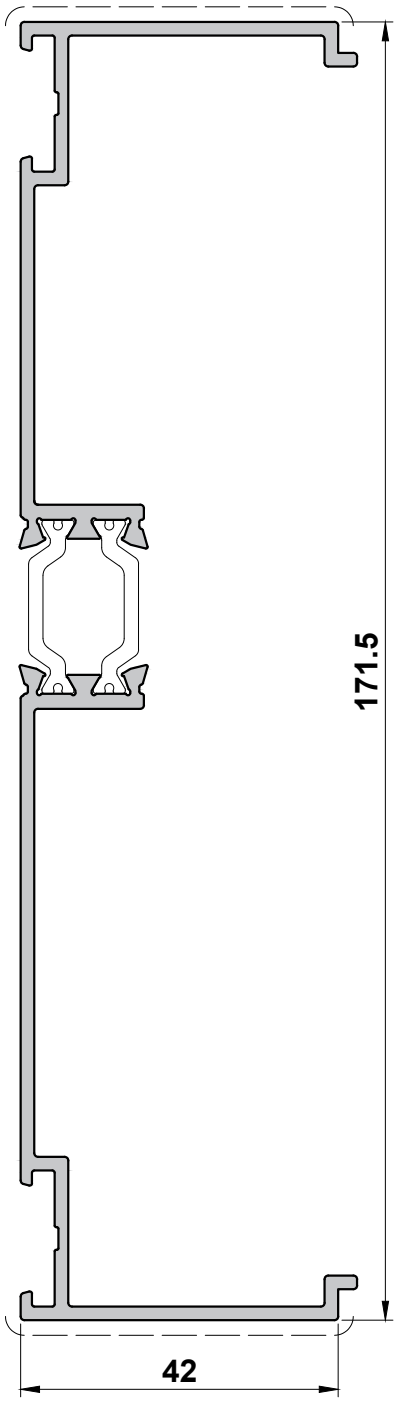

Primary Visible Side

Secondary Visible Side

VG5189 HYB

Head Extension for VG5019

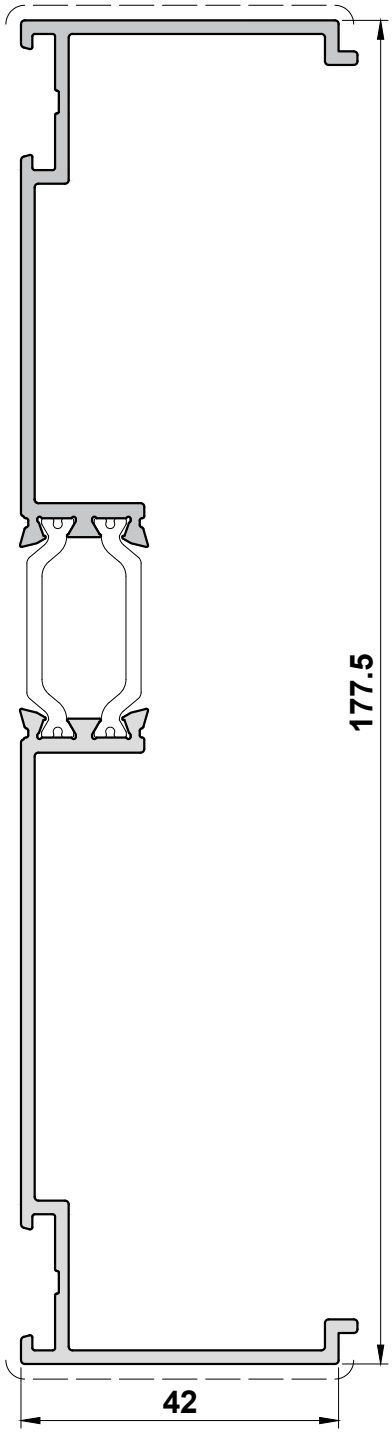

VG573

VG5013 Track Head Extension

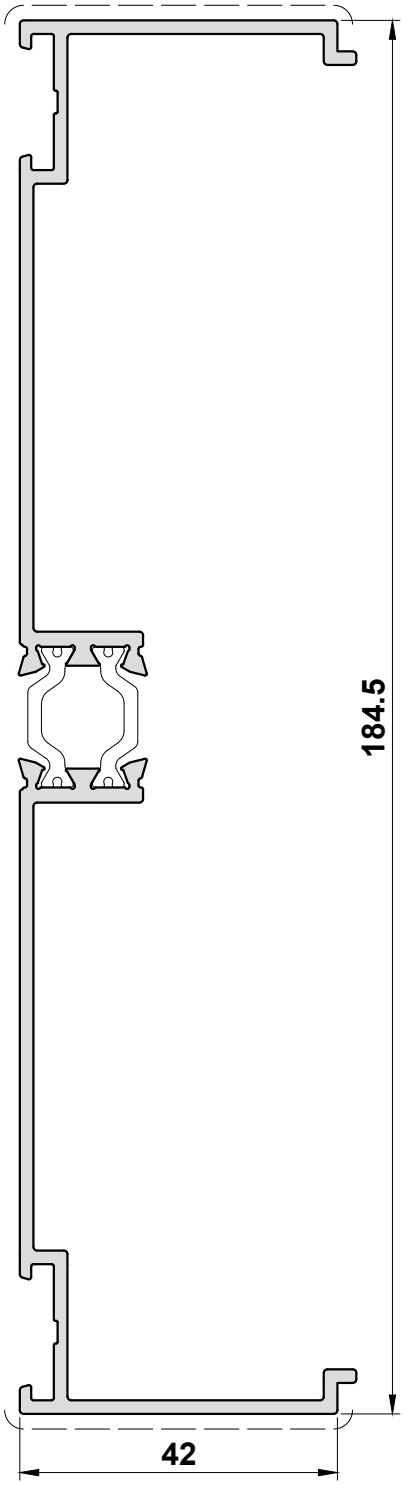

Primary Visible Side — — — — — — — — — — Secondary Visible Side ——— · ——— · ———

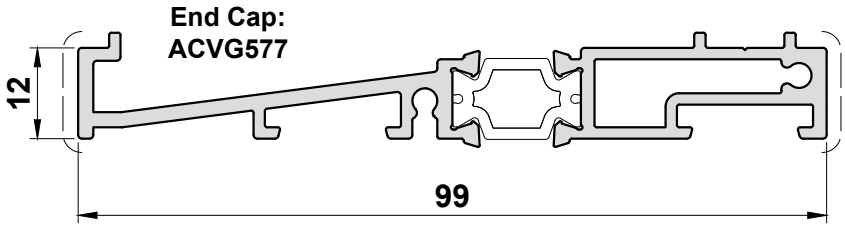

VG577
Drainage Tray

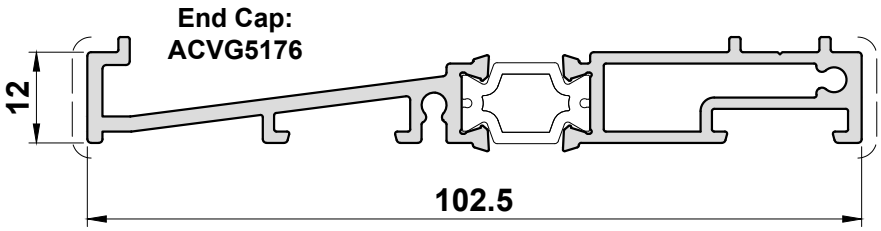

VG5176 HYB
Drainage Tray for VG5016

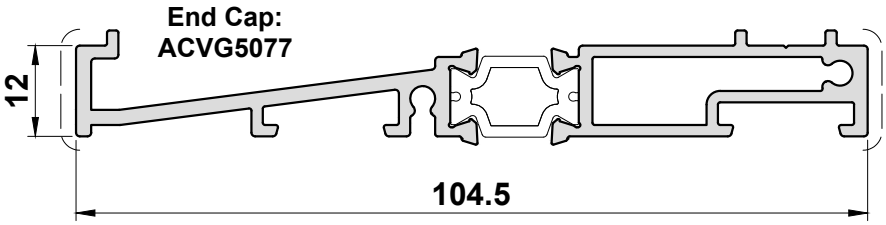

VG5077
Drainage Tray

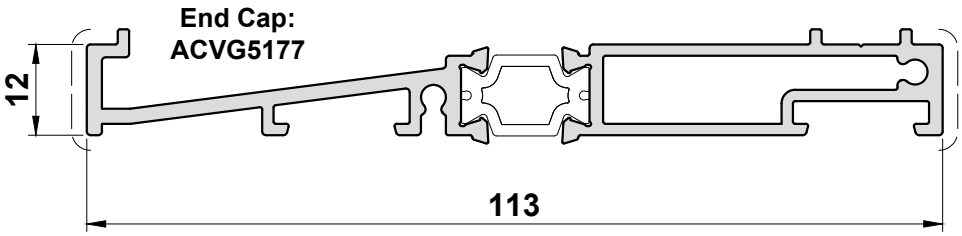

VG5177 HYB
Drainage Tray for VG5017

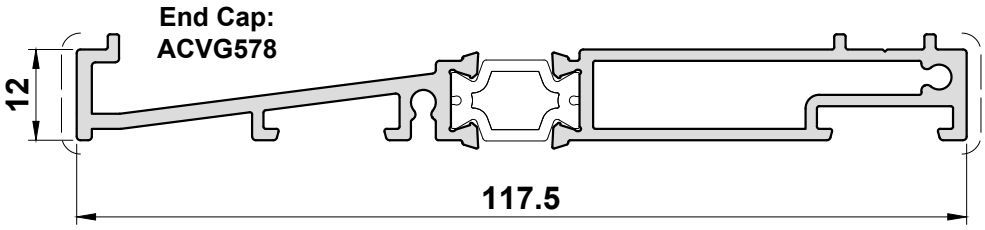

VG578
Drainage Tray

Primary Visible Side — — — — — — — — — Secondary Visible Side ——— · ——— · ———

VG5178 HYB
Drainage Tray for VG5018

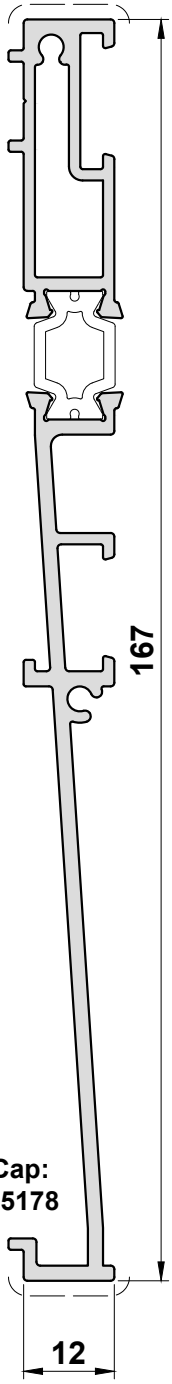

End Cap: ACVG5178

VG5079
Drainage Tray

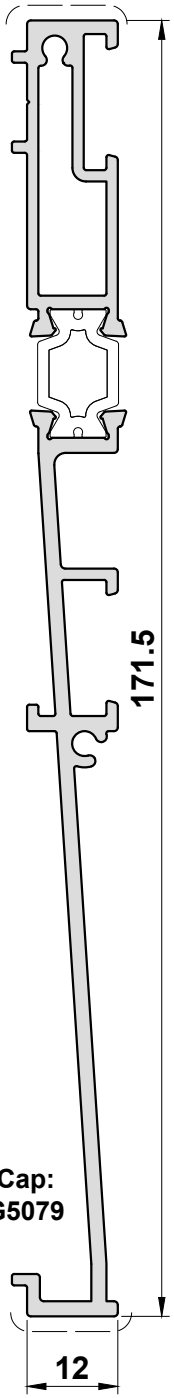

End Cap: ACVG5079

VG5179 HYB
Drainage Tray for VG5019

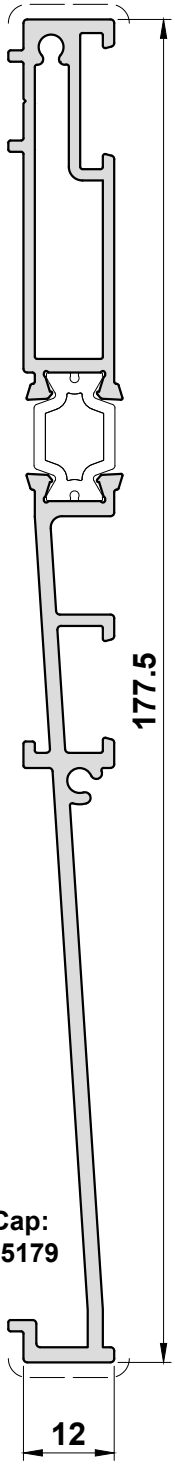

End Cap: ACVG5179

VG584
Drainage Tray

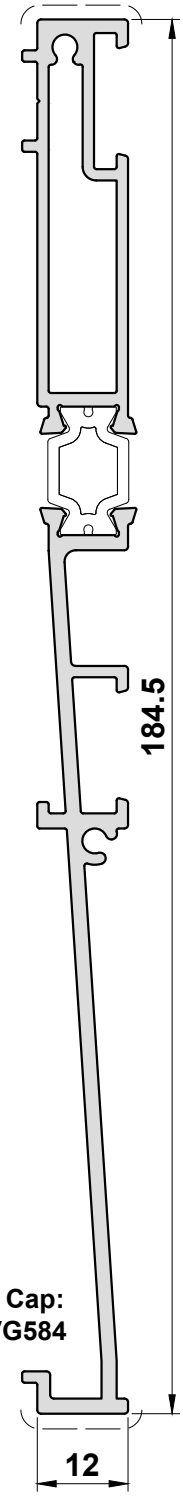

End Cap: ACVG584

Primary Visible Side — — — — — — — — — — Secondary Visible Side ——— · ——— · ———

UN3040

215mm cill
(Scale 1:2)

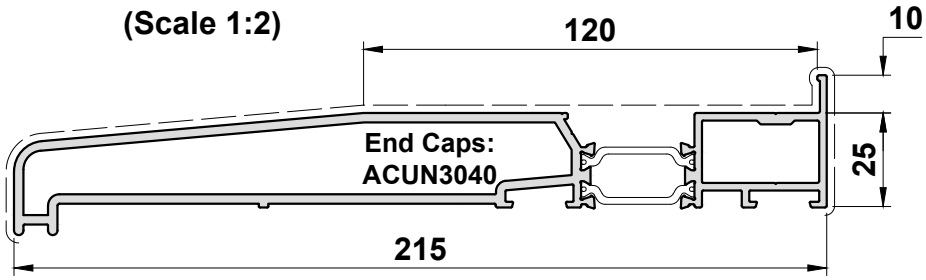

ETC478

300mm cill
(Scale 1:2)

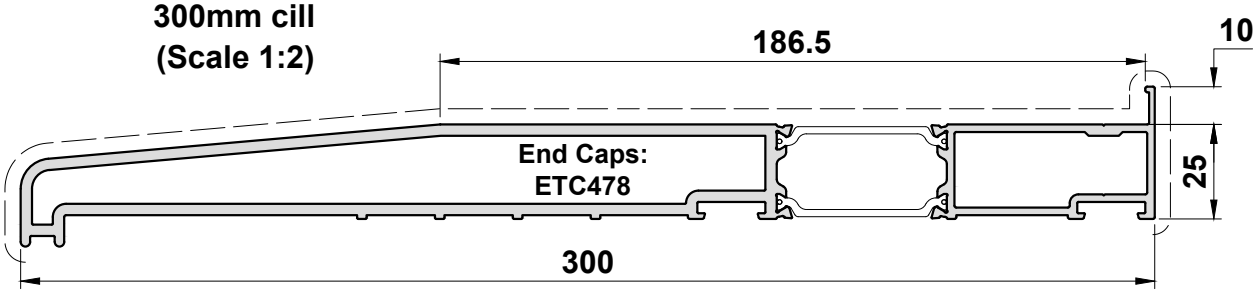

Primary Visible Side — — — — — — — — — — **Secondary Visible Side** — — — — — — — — — —

Section B

Accessories

Photos & Drawings

Section B

Punch Tool

Visoglide Plus Upgrade
Part Number : ACVG905N

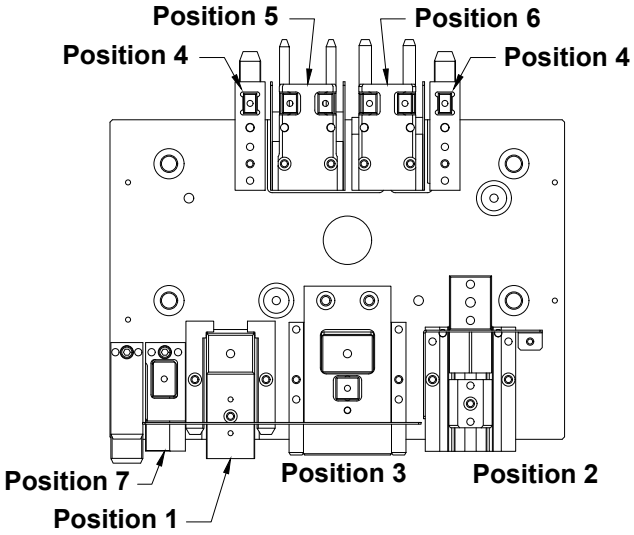

Please Note:
VG920 can only be punched using ACVG905N.

FOR FULL USAGE REFER TO PAGE E03

Punch Tool Base : ACIP529
Spray Oil: ACVL158

Visoglide Plus Hybrid
Part Number : ACVG908 HYB

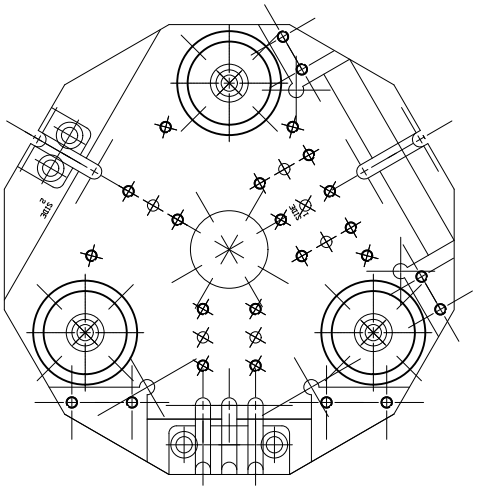

Position 1

FOR FULL USAGE REFER TO PAGE E04

Countersunk Screws

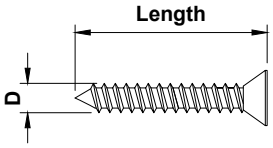

Gauge	'D' (mm)
No.6	3.5
No.7	3.8
No.8	4
No.10	5
No.12	6

Part Number	Gauge	X	Length	Description	Box Qty.
ACUN3530	No.6	X	5/8"	Countersunk Pozi Self Tapper S/S	100
MUA025SSZ	No.6	X	1"	Countersunk Pozi Self Tapper S/S	100
ACET067	No.7	X	1/2"	Countersunk Pozi Self Tapper S/S	100
ACET060	No.7	X	1"	Countersunk Pozi Self Tapper S/S	100
ACET066	No.7	X	1 1/2"	Countersunk Pozi Self Tapper S/S	100
MUA067SSZ	No.7	X	2"	Countersunk Pozi Self Tapper S/S	100
ACUN3544	No.7	X	3/4"	Countersunk Pozi Self Tapper S/S	100
ACET064	No.8	X	5/8"	Countersunk Pozi Self Tapper S/S	100
ACUN3512	No.8	X	1 1/4"	Countersunk Pozi Self Tapper S/S	100
ACUN3513	No.8	X	1 3/4"	Countersunk Pozi Self Tapper S/S	100
ACET072	No.8	X	2 1/2"	Countersunk Pozi Self Tapper S/S	100
ACET490	4.3mm	X	16mm	Countersunk PH2 Polyamide Screw	1000
ACET290	4.3mm	X	20mm	Countersunk PH2 Polyamide Screw	100
ACET390	4.3mm	X	25mm	Countersunk PH2 Polyamide Screw	200
ACET190	4.3mm	X	45mm	Countersunk PH2 Polyamide Screw	1000
ACVS062	4.3mm	X	65mm	Countersunk PH2 Polyamide Screw	1000
ACET048	No.10	X	3/8"	Countersunk Pozi Self Tapper S/S	100
ACIM062	No.10	X	1 1/4"	Countersunk Pozi Self Tapper S/S	100
ACET062	No.10	X	2"	Countersunk Pozi Self Tapper S/S	100
ACET076	No.10	X	2 1/2"	Countersunk Pozi Self Tapper S/S	100

Pan Head Screws

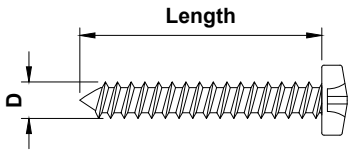

Gauge	'D' (mm)
No.6	3.5
No.7	3.8
No.8	4
No.10	5
No.12	6

Part Number	Gauge	X	Length	Description	Box Qty.
ACET068	No.8	X	3/8"	Pozi Flange AB	100
ACET063	No.8	X	1/2"	Pan Head Self Tapper	100
ACET070	No.8	X	1/2"	Pozi Flange Self Tapper S/S	100
ACUN3535	No.8	X	5/8"	Pan Head Pozi S/S	100
ACUN3502	No.8	X	19mm	Pan Head Pozi S/S	100
ACET099	No.8	X	3/4"	Pozi Flange Self Tapper S/S	100
ACDR050	4.8mm	X	32mm	Pan Head Pozi S/S	200
PUA028	No.10	X	1"	Pan Head Pozi S/S	100
ACDR052	No.10	X	2"	Pan Head Self Tapper S/S	200
ACET079	No.10	X	2 1/2"	Pan Head Pozi S/S	100
ACW20160	No.12	X	1"	Flange Head Self Tapper S/S	100
ACMC109	6.3mm	X	38mm	DIN7981 - Pan Head Self Tapper	200

Machine Screws

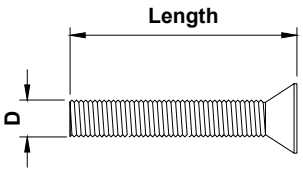

Thread	'D' (mm) Nominal
M4	4
M5	5
M6	6
M8	8
M10	10

Part Number	Thread	X	Length	Description	Box Qty.
ACET122	M4	X	10	CSK Pozi Machine Screw	100
ACET123	M4	X	20	CSK Pozi Machine Screw	100
ACDV264	M4	X	35	CSK Pozi Machine Screw	100
ACSG071	M4	X	40	CSK Pozi Machine Screw	100
ACDV266	M4	X	45	CSK Pozi Machine Screw	100
ACDV262	M4	X	50	CSK Pozi Machine Screw	100
ACDV265	M4	X	60	CSK Pozi Machine Screw	100
ACDR051	M5	X	10	CSK Pozi Machine Screw	100
ACET069	M5	X	12	CSK Pozi Machine Screw	100
HEA132	M5	X	16	CSK Pozi Machine Screw	100
WCA134	M5	X	20	CSK Pozi Machine Screw	100
WCA143	M5	X	25	CSK Pozi Machine Screw	50
ACUN3524	M5	X	30	CSK Pozi Machine Screw	100
ACVS060	M5	X	35	CSK Pozi Machine Screw	100
ACVS061	M5	X	40	CSK Pozi Machine Screw	100
ACUN3587	M5	X	43	CSK Pozi Machine Screw	100
ACET133	M5	X	50	CSK Pozi Machine Screw	100
ACET220	M5	X	60	CSK Pozi Machine Screw	100
ACUN3589	M5	X	64	CSK Pozi Machine Screw	1
ACET238	M5	X	70	CSK Pozi Machine Screw	100
ACMX861	M5	X	80	DIN965 - CSK Machine Screw	10
ACMX862	M5	X	90	DIN965 - CSK Machine Screw	10
ACUN3503	M6	X	10	CSK Socket Machine Screw	24
ACUN3501	M6	X	13	CSK Flange Socket Machine Screw	48
ACMX852	M6	X	16	DIN965 - CSK Machine Screw	10
HEA390	M6	X	16	CSK Socket Machine Screw	32
ACUN3523	M6	X	50	CSK Pozi Machine Screw	2
ACET235	M6	X	60	CSK Pozi Machine Screw	100
ACET237	M6	X	70	CSK Pozi Machine Screw	100

Glazing Gaskets

Retaining Gasket
Commonly known as an E Gasket.
Retaining gaskets create a seal between the Glass and the Aluminium Profile.

High Line	2mm		**ACVG231**
			200m
			BL
	3mm		**ACVG31**
			200m
			BL
	4mm		**ACVG131**
			100m
			BL
Low Line	2mm	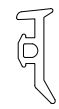	**ACET844**
			200m
			BL
	3mm		**ACET842**
			200m
			BL
	4mm		**ACET841**
			200m
			BL
	4mm	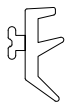	**ACET835**
			200m
			BL

Thickness	Drawing 1:1	**Part number**
		Coil length
		Available Colours

Wedge Gasket
Wedge Gaskets help to hold the bead in place by providing tension between the bead and the glazing unit.

High Line	3mm		**ACVG32**
			100m
			BL
	3mm		**ACVG32N**
			100m
			BL
	4mm		**ACVG33**
			100m
			BL
	4mm		**ACVG33N**
			100m
			BL
	5mm		**ACVG34**
			100m
			BL
	5mm		**ACVG34N**
			100m
			BL
	6mm		**ACVG340**
			200m
			BL
	6mm		**ACVG340N**
			100m
			BL
Low Line	4mm - 3mm		**ACW20038**
			50m
			BL
	5mm - 4mm		**ACET840N**
			200m
			BL

Image	Part Code	Pack	Unit	Application	Colour
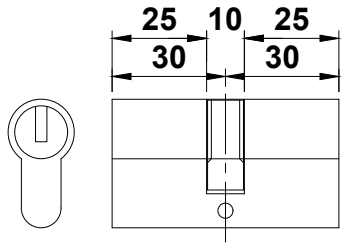	**ACCY3030NKS1** **1 Star High Security 30/30 Europrofile Cylinder Anti-Bump, Anti-Pick, Anti-Screw & Anti-Drill protection. Nickel Finish** **For Keyed Alike Order ACCY3030NKS1SL**	**1**	**each**	**ACSZ750 ACSZ751**	MF SA KL HP SSC SMC W Z PC
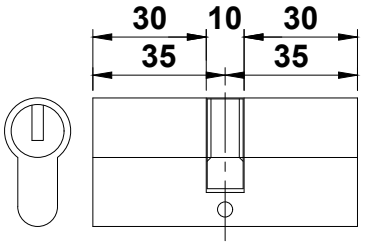	**ACCY3535NKS1** **1 Star High Security 35/35 Europrofile Cylinder Anti-Bump, Anti-Pick, Anti-Screw & Anti-Drill protection. Nickel Finish** **For Keyed Alike Order ACCY3535NKS1SL**	**1**	**each**	**ACSZ400 ACSZ839**	MF SA KL HP SSC SMC W Z PC
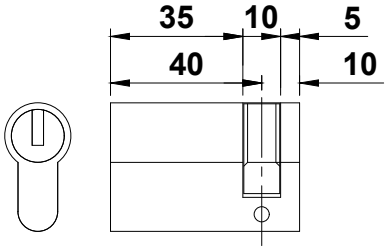	**ACMX01603** **40mm Europrofile Half Cylinder** **For keyed alike order ACMX01603-SL**	**1**	**each**		MF SA KL HP SSC SMC W Z PC
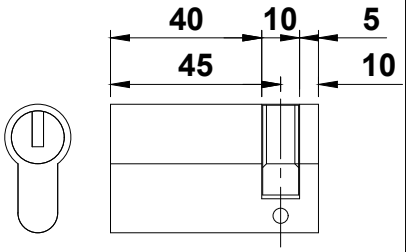	**ACMX01604** **45mm Europrofile Half Cylinder** **For keyed alike order ACMX01604-SL**	**1**	**each**		MF SA KL HP SSC SMC W Z PC
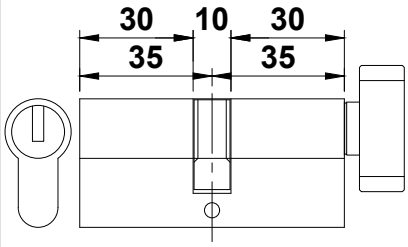	**ACCY3535TTS3** **3* Star Cylinder 35/35**	**1**	**each**	**ACSZ400 ACSZ839**	MF SA KL HP SSC SMC W Z PC

T-BARS
ACVG65=2.5mm
ACVG66=3.0mm
ACVL150=4.0mm

Screw (Grub)

MF = Mill Finish
SA = Silver Anodised
KL = Basic Colour
HP = Special Colour
SSC = Smooth Satin Chrome
SMC = Smokey Chrome
PC = Polished Chrome
W = White
Z = Black

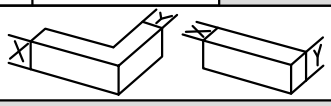

Image	Part Code	Pack	Unit	Application	Colour
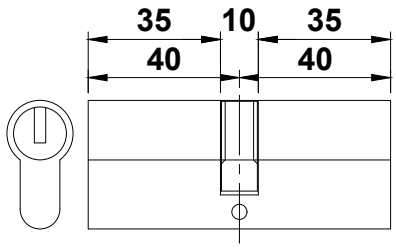	**ACCY4040NKS1** 1 Star High Security 40/40 Europrofile Cylinder Anti-Bump, Anti-Pick, Anti-Screw & Anti-Drill protection. Nickel Finish For Keyed Alike Order ACCY4040NKS1SL	1	each	ACSZ400 ACSZ839 ACVG649 ACVG319 ACVG320	MF SA KL HP SSC SMC W Z PC
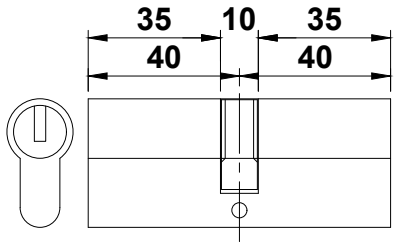	**ACCY4040NKS3** 3 Star High Security 40/40 Europrofile Cylinder Anti-Bump, Anti-Pick, Anti-Screw & Anti-Drill protection. Nickel Finish Keyed Alike Unavailable	1	each	ACSZ400 ACSZ839 ACVG649 ACVG319 ACVG320	MF SA KL HP SSC SMC W Z PC
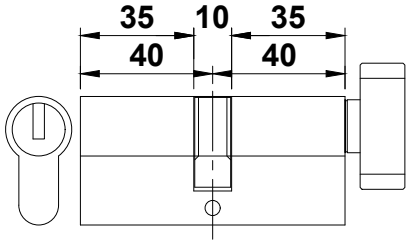	**ACCY4040NKTTS1** 1 Star High Security 40/40 Europrofile Cylinder with Thumb Turn Anti-Bump, Anti-Pick, Anti-Screw & Anti-Drill protection. Nickel Finish For Keyed Alike Order ACCY4040NKTTS1SL	1	each		MF SA KL HP SSC SMC W Z PC
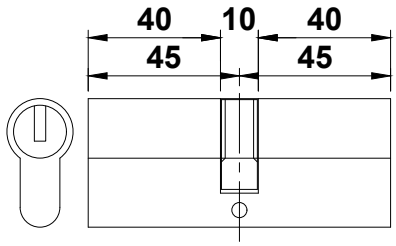	**ACCY4545NKS1** 1 Star High Security 45/45 Europrofile Cylinder Anti-Bump, Anti-Pick, Anti-Screw & Anti-Drill protection. Nickel Finish For Keyed Alike Order ACCY4545NKS1SL	1	each	ACVG649 ACVG323	MF SA KL HP SSC SMC W Z PC
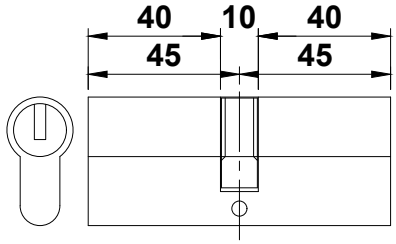	**ACCY4545PCS3** 3 Star High Security 45/45 Europrofile Cylinder Anti-Bump, Anti-Pick, Anti-Screw & Anti-Drill protection. Nickel Finish Keyed Alike Unavailable	1	each	ACVG649 ACVG323	MF SA KL HP SSC SMC W Z PC

T-BARS
ACVG65=2.5mm
ACVG66=3.0mm
ACVL150=4.0mm

Screw (Grub)

MF	= Mill Finish	W	= White
SA	= Silver Anodised	Z	= Black
KL	= Basic Colour		
HP	= Special Colour		
SSC	= Smooth Satin Chrome		
SMC	= Smokey Chrome		
PC	= Polished Chrome		

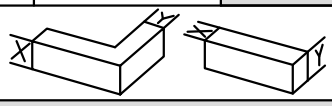

Image	Part Code	Pack	Unit	Application	Colour
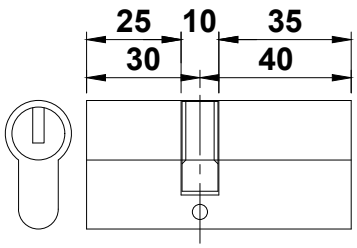	**ACMX3040** **30/40mm Europrofile Cylinder** **For keyed alike order ACMX3040-SL**	**1**	**each**		MF SA KL HP SSC SMC W Z PC
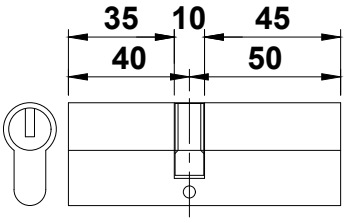	**ACCY4050NK** **40/50mm Europrofile Cylinder**	**1**	**each**		MF SA KL HP SSC SMC W Z PC
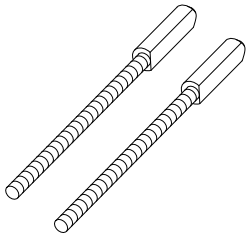	**ACDV228** **Nylon Shootbolt Locking Rods** **Lengths:** **1 x 1267mm & 1 x 1400mm** **NOT PAS24**	**1**	**each**		MF SA KL HP SSC SMC W Z PC
	**ACDV313** **Shootbolt End Piece**	**1**	**each**	**ACDV326**	MF SA KL HP SSC SMC W Z PC
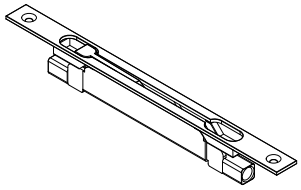	**ACDV326** **Flush Bolt**	**1**	**each**		MF SA KL HP SSC SMC W Z PC

T-BARS
ACVG65=2.5mm
ACVG66=3.0mm
ACVL150=4.0mm

Screw (Grub)

MF	**= Mill Finish**	**W**	**= White**
SA	**= Silver Anodised**	**Z**	**= Black**
KL	**= Basic Colour**		
HP	**= Special Colour**		
SSC	**= Smooth Satin Chrome**		
SMC	**= Smokey Chrome**		
PC	**= Polished Chrome**		

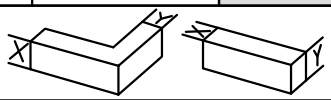

Image	Part Code	Pack	Unit	Application	Colour	
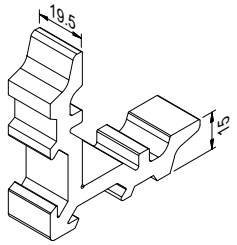	**ACEF010B** **Crimp Corner Cleat**	**24**	**Pack**	**VG610** **VG618**	MF	
					SA	
					KL	
					HP	
					SSC	
					SMC	
					W	
					Z	
					PC	
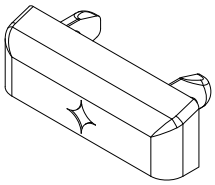	**ACET431** **Drainage Cover Cap**	**8**	**Pack**		MF	
					SA	
					KL	✓
					HP	✓
					SSC	
					SMC	
					W	
					Z	
					PC	
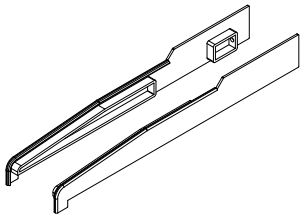	**ACET478** **Cast Cill End Caps**	**1**	**Pair**	**ETC478**	MF	✓
					SA	
					KL	✓
					HP	✓
					SSC	
					SMC	
					W	✓
					Z	✓
					PC	
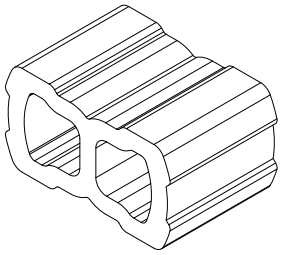	**ACFT075** **Linking Gasket**	**50**	**m**		MF	
					SA	
					KL	
					HP	
					SSC	
					SMC	
					W	
					Z	
					PC	
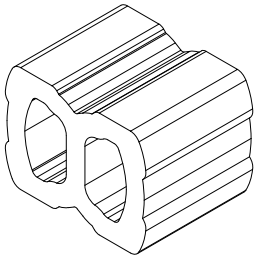	**ACFT076** **Linking Gasket**	**100**	**m**		MF	
					SA	
					KL	
					HP	
					SSC	
					SMC	
					W	
					Z	
					PC	

T-BARS
ACVG65=2.5mm
ACVG66=3.0mm
ACVL150=4.0mm

Screw (Grub)

MF = Mill Finish
SA = Silver Anodised
KL = Basic Colour
HP = Special Colour
SSC = Smooth Satin Chrome
SMC = Smokey Chrome
PC = Polished Chrome
W = White
Z = Black

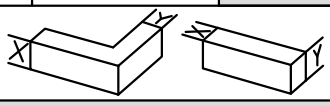

Image	Part Code	Pack	Unit	Application	Colour	
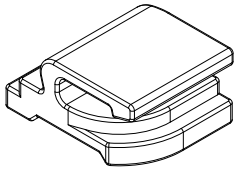	**ACFT171** **Clip for VG615 & VG616**	**200**	**Pack**	**VG610** **VG615** **VG616** **VG618**	MF	
					SA	
					KL	
					HP	
					SSC	
					SMC	
					W	
					Z	
					PC	
	**ACGSL045** **Drainage Cover Cap**	**100**	**Pack**		MF	
					SA	
					KL	
					HP	
					SSC	
					SMC	
					W	✓
					Z	✓
					PC	
	**ACGSL057** **Valve Cap (PVC)**	**10**	**Pack**	**VG618**	MF	
					SA	
					KL	
					HP	
					SSC	
					SMC	
					W	
					Z	
					PC	
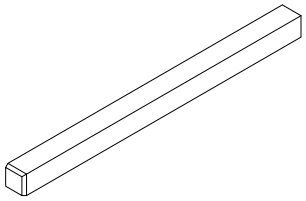	**ACMX008** **60 x 8 x 8mm Spindle**	**1**	**each**		MF	
					SA	
					KL	
					HP	
					SSC	
					SMC	
					W	
					Z	
					PC	
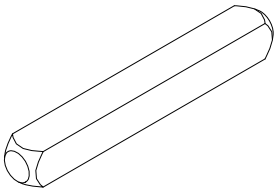	**ACMX1070** **70 x 10 x 10 Lift and Slide Half Spindle**	**1**	**each**		MF	
					SA	
					KL	
					HP	
					SSC	
					SMC	
					W	
					Z	
					PC	

T-BARS
ACVG65=2.5mm
ACVG66=3.0mm
ACVL150=4.0mm

Screw (Grub)

MF = Mill Finish
SA = Silver Anodised
KL = Basic Colour
HP = Special Colour
SSC = Smooth Satin Chrome
SMC = Smokey Chrome
PC = Polished Chrome
W = White
Z = Black

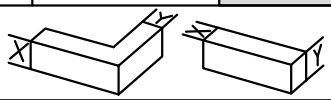

Image	Part Code	Pack	Unit	Application	Colour
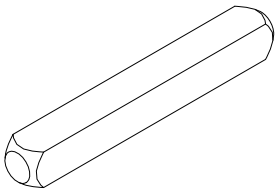	**ACMX1138** **138 x 10 x 10mm Lift & Slide Spindle**	**1**	**each**		MF SA KL HP SSC SMC W Z PC
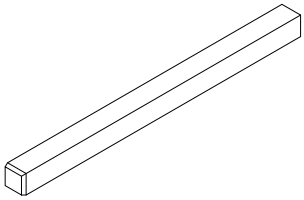	**ACMX209** **120 x 8 x 8mm Spindle**	**1**	**each**		MF SA KL HP SSC SMC W Z PC
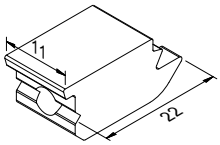	**ACMX853** **Cleat Tensioning Block 11mm**	**48**	**Pack**	**VG510** **VG511** **VG512** **VG513** **VG610** **VG612** **VG618**	MF SA KL HP SSC SMC W Z PC
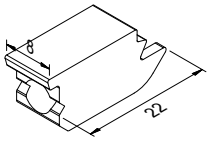	**ACMX854** **Cleat Tensioning Block 8mm**	**48**	**Pack**	**VG520** **VG521N**	MF SA KL HP SSC SMC W Z PC
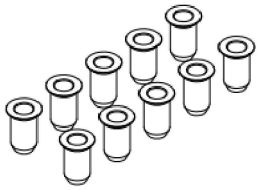	**ACMX867** **M5 Rivnuts**	**10**	**Pack**		MF SA KL HP SSC SMC W Z PC

T-BARS
ACVG65=2.5mm
ACVG66=3.0mm
ACVL150=4.0mm

Screw (Grub)

MF = Mill Finish
SA = Silver Anodised
KL = Basic Colour
HP = Special Colour
SSC = Smooth Satin Chrome
SMC = Smokey Chrome
PC = Polished Chrome
W = White
Z = Black

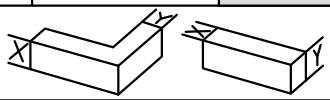

Visoglide Plus

ACCESSORIES : PHOTOS & DRAWINGS

Image	Part Code	Pack	Unit	Application	Colour
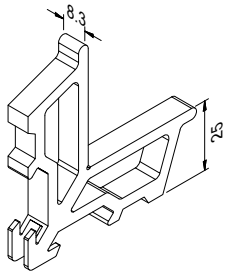	**ACSG012** **Mechanical Cleat**	**24**	**Pack**	**VG520**	MF SA KL HP SSC SMC W Z PC
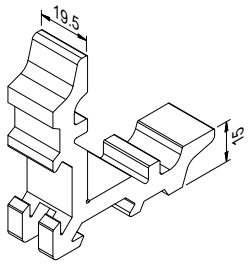	**ACVG611B** **Mechanical Corner Cleat**	**24**	**Pack**	**VG610** **VG618**	MF SA KL HP SSC SMC W Z PC
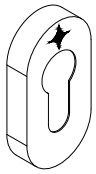	**ACSM015N** **Quantum Range Oval Door Escutcheon** **316 Stainless Steel**	**1**	**Pair**		MF SA KL HP SSC SMC W Z PC
	**ACSM016N** **Straight Sliding Lever Door Handle** **316 Stainless Steel**	**1**	**Pair**		MF SA KL HP SSC SMC W Z PC
	**ACSM017** **Lift and Slide Door Handle and Flush Pull** **316 Stainless Steel**	**1**	**each**		MF SA KL HP SSC SMC W Z PC

T-BARS
ACVG65=2.5mm
ACVG66=3.0mm
ACVL150=4.0mm

Screw (Grub)

MF = Mill Finish
SA = Silver Anodised
KL = Basic Colour
HP = Special Colour
SSC = Smooth Satin Chrome
SMC = Smokey Chrome
PC = Polished Chrome
W = White
Z = Black

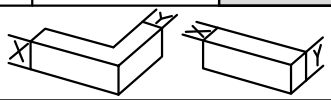

ISSUE: JANUARY 2026

Image	Part Code	Pack	Unit	Application	Colour
	**ACSM018** **Lift and Slide Door Handle Back to Back** **316 Stainless Steel**	**1**	**Pair**		MF SA KL HP SSC SMC W Z PC
	**ACSM019N** **Patio Door Handles** **(Can be single sided)** **316 Stainless Steel**	**1**	**Pair**		MF SA KL HP SSC SMC W Z PC
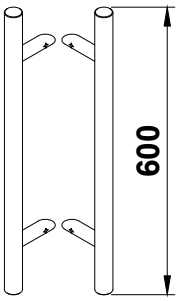	**ACSM020** **600mm Off-Set T Bar Back to Back** **316 Stainless Steel**	**1**	**Pair**		MF SA KL HP SSC SMC W Z PC
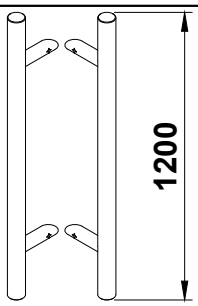	**ACSM021** **1200mm Off-Set T Bar Back to Back** **316 Stainless Steel**	**1**	**Pair**		MF SA KL HP SSC SMC W Z PC
	**ACSM024N** **Dummy Patio Handle to match ACSM019** **(Can be single sided)** **316 Stainless Steel**	**1**	**Pair**		MF SA KL HP SSC SMC W Z PC

T-BARS
ACVG65=2.5mm
ACVG66=3.0mm
ACVL150=4.0mm

Screw (Grub)

MF = Mill Finish
SA = Silver Anodised
KL = Basic Colour
HP = Special Colour
SSC = Smooth Satin Chrome
SMC = Smokey Chrome
PC = Polished Chrome
W = White
Z = Black

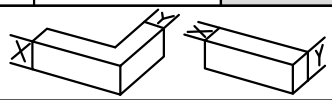

Image	Part Code	Pack	Unit	Application	Colour
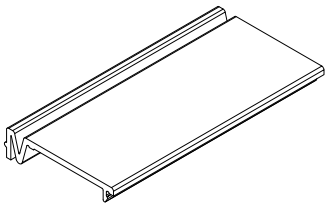	**ACSP057** **Glass Support**	**100** **1000**	**Pack** **Pack**	**VG610** **VG618**	MF SA KL HP SSC SMC W Z PC
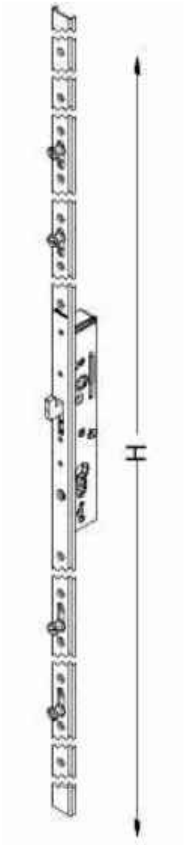 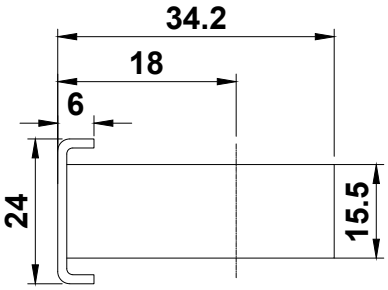 	**ACSZ007** **2170mm Multi-Point Lock** **Requires:** **1 x ACSZ100 Ctr Keep** **4 x ACSZ101 Keeps** **----------OR----------** **1 x ACSZ103 F/Height Keep** **----------OR----------** **1 x ACSZ105 F/H Keep + 600mm** **----------OR----------** **1 x ACVG550** **ACSZ008** **1970mm Multi-Point Lock** **Requires:** **1 x ACSZ100 Ctr Keep** **4 x ACSZ101 Keeps** **----------OR----------** **1 x ACSZ107 F/Height Keep** **----------OR----------** **1 x ACSZ109 + 600mm** **ACSZ009** **2370mm Multi-Point Lock** **Requires:** **1 x ACSZ100 Ctr Keep** **4 x ACSZ101 Keeps** **----------OR----------** **1 x ACSZ111 F/Height Keep** **----------OR----------** **1 x ACSZ113 F/H Keep + 600mm**	**1**	**each**	**VG520** **ACSZ100** **ACSZ101**	MF SA KL HP SSC SMC W Z PC

T-BARS
ACVG65=2.5mm
ACVG66=3.0mm
ACVL150=4.0mm

Screw (Grub)

MF	**= Mill Finish**	**W**	**= White**
SA	**= Silver Anodised**	**Z**	**= Black**
KL	**= Basic Colour**		
HP	**= Special Colour**		
SSC	**= Smooth Satin Chrome**		
SMC	**= Smokey Chrome**		
PC	**= Polished Chrome**		

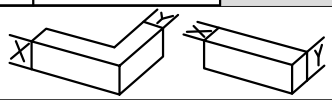

Image	Part Code	Pack	Unit	Application	Colour
	**ACSZ010** **280mm Single Point Lock** **Requires:** **1 x ACSZ100 Ctr Keep**	**1**	**each**	**VG520** **ACSZ100**	MF SA KL HP SSC SMC W Z PC
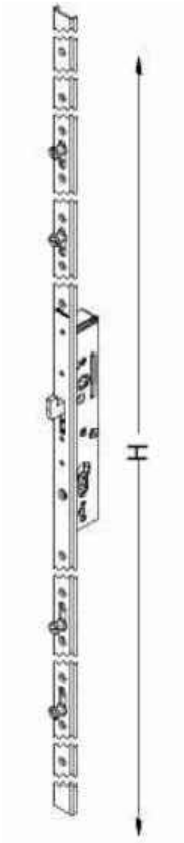	**ACSZ015** **2170mm Multi-Point Lock** **Requires:** **1 x ACSZ100 Ctr Keep** **4 x ACSZ101 Keeps** **(For 90° corners)**	**1**	**each**	**VG580** **ACSZ100** **ACSZ101**	MF SA KL HP SSC SMC W Z PC

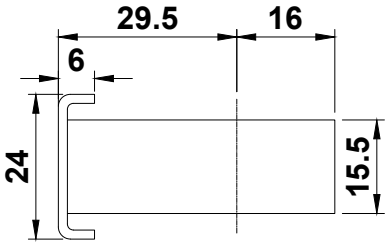

T-BARS
ACVG65=2.5mm
ACVG66=3.0mm
ACVL150=4.0mm

Screw (Grub)

MF = Mill Finish
SA = Silver Anodised
KL = Basic Colour
HP = Special Colour
SSC = Smooth Satin Chrome
SMC = Smokey Chrome
PC = Polished Chrome
W = White
Z = Black

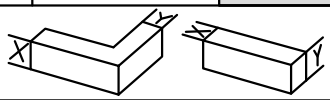

Image	Part Code	Pack	Unit	Application	Colour
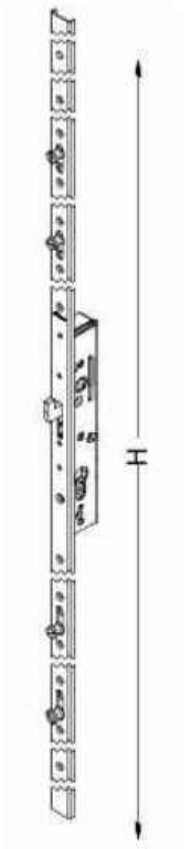	**PAS24 Multi-Point Locks** **ACSZ024** **2170mm Multi-Point Lock** **Requires:** **1 x ACSZ122 F/Height Keep** **----------OR----------** **1 x ACSZ124 F/H Keep + 600mm** **ACSZ025** **1970mm Multi-Point Lock** **Requires:** **1 x ACSZ126 F/Height Keep** **----------OR----------** **1 x ACSZ128 F/H Keep + 600mm** **ACSZ026** **2370mm Multi-Point Lock** **Requires:** **1 x ACSZ130 F/Height Keep** **----------OR----------** **1 x ACSZ132 F/H Keep + 600mm**	**1**	**each**	**VG520** **VG920**	MF SA KL HP SSC SMC W Z PC
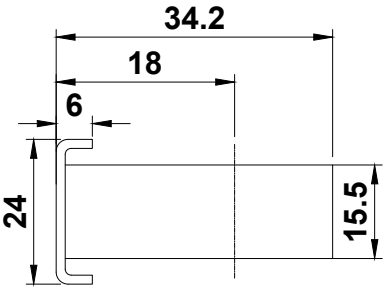					

T-BARS
ACVG65=2.5mm
ACVG66=3.0mm
ACVL150=4.0mm

Screw (Grub)

MF	**= Mill Finish**	**W**	**= White**
SA	**= Silver Anodised**	**Z**	**= Black**
KL	**= Basic Colour**		
HP	**= Special Colour**		
SSC	**= Smooth Satin Chrome**		
SMC	**= Smokey Chrome**		
PC	**= Polished Chrome**		

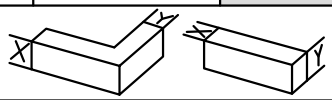

Image	Part Code	Pack	Unit	Application	Colour
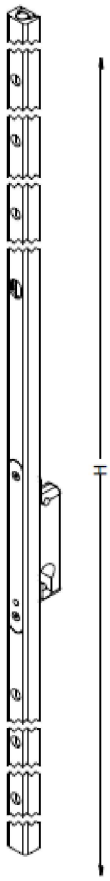	**BT Lock (Cylinder operated)** Lock / Sash height ACSZ040 ≤2366 mm. ACSZ041 ≤2700 mm. ACSZ042 ≤3100 mm. Only to lock into outerframe	1 1 1	each each each	VG520 VG920	MF SA KL HP SSC SMC W Z PC
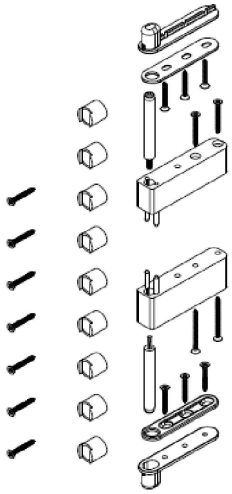	**ACSZ046** Fixing kit and keeps for ACSZ040 to ACSZ042.	1	Pack	ACSZ040 ACSZ041 ACSZ042	MF SA KL HP SSC SMC W Z PC

T-BARS
ACVG65=2.5mm
ACVG66=3.0mm
ACVL150=4.0mm

Screw (Grub)

MF	= Mill Finish	W	= White
SA	= Silver Anodised	Z	= Black
KL	= Basic Colour		
HP	= Special Colour		
SSC	= Smooth Satin Chrome		
SMC	= Smokey Chrome		
PC	= Polished Chrome		

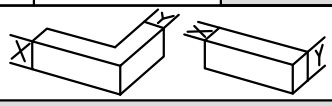

Image	Part Code	Pack	Unit	Application	Colour
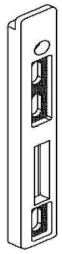	**ACSZ100** **Centre Keep**	**1** **20**	**each** **Pack**	**ACSZ007** **ACSZ008** **ACSZ009** **ACSZ010**	MF SA KL HP SSC SMC W Z PC
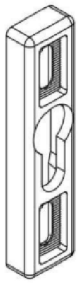	**ACSZ101** **Mushroom Keep**	**10**	**Pack**	**ACSZ007** **ACSZ008** **ACSZ009**	MF SA KL HP SSC SMC W Z PC
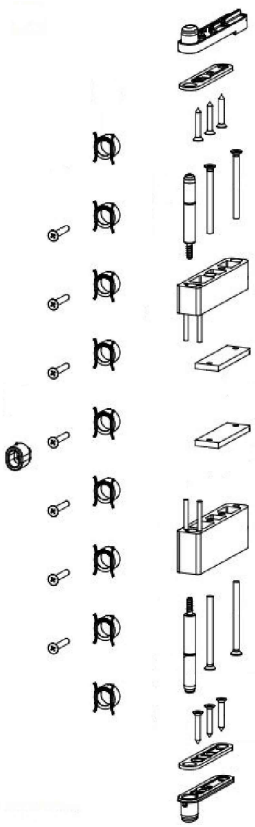	**ACSZ050** **Fixing kit and keeps for ACSZ040 to ACSZ042 with night vent position**	**1**	**Pack**	**ACSZ040** **ACSZ041** **ACSZ042**	MF SA KL HP SSC SMC W Z PC

T-BARS
ACVG65=2.5mm
ACVG66=3.0mm
ACVL150=4.0mm

Screw (Grub)

MF = Mill Finish
SA = Silver Anodised
KL = Basic Colour
HP = Special Colour
SSC = Smooth Satin Chrome
SMC = Smokey Chrome
PC = Polished Chrome
W = White
Z = Black

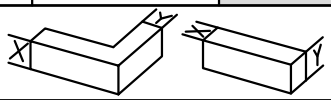

Image	Part Code	Pack	Unit	Application	Colour
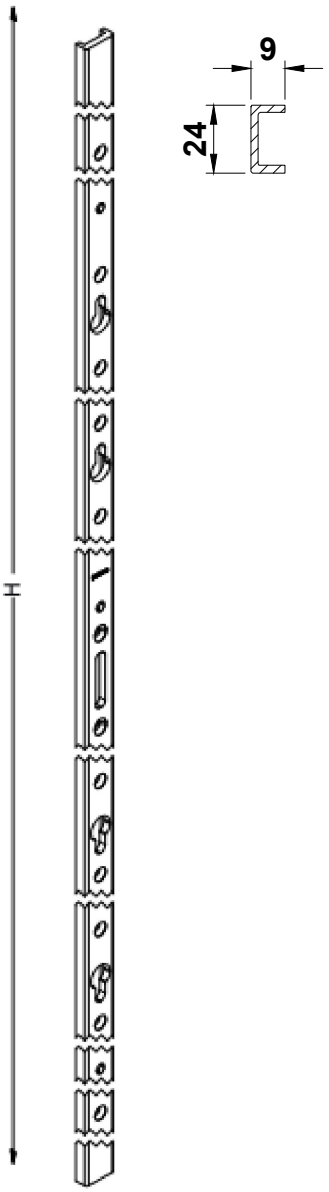	**ACSZ103** 2170mm Full Height Keep for ACSZ007 **ACSZ105** 2770mm Full Height Keep for ACSZ007 **ACSZ107** 1970mm Full Height Keep for ACSZ008 **ACSZ109** 2570mm Full Height Keep for ACSZ008 **ACSZ111** 2370mm Full Height Keep for ACSZ009 **ACSZ113** 2970mm Full Height Keep for ACSZ009	1	each	VG520 VG920 ACSZ100 ACSZ101	MF SA ✓ KL ✓ HP ✓ SSC SMC W ✓ Z ✓ PC

T-BARS
ACVG65=2.5mm
ACVG66=3.0mm
ACVL150=4.0mm

Screw (Grub)

MF	= Mill Finish	W	= White
SA	= Silver Anodised	Z	= Black
KL	= Basic Colour		
HP	= Special Colour		
SSC	= Smooth Satin Chrome		
SMC	= Smokey Chrome		
PC	= Polished Chrome		

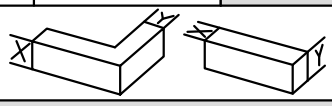

Image	Part Code	Pack	Unit	Application	Colour
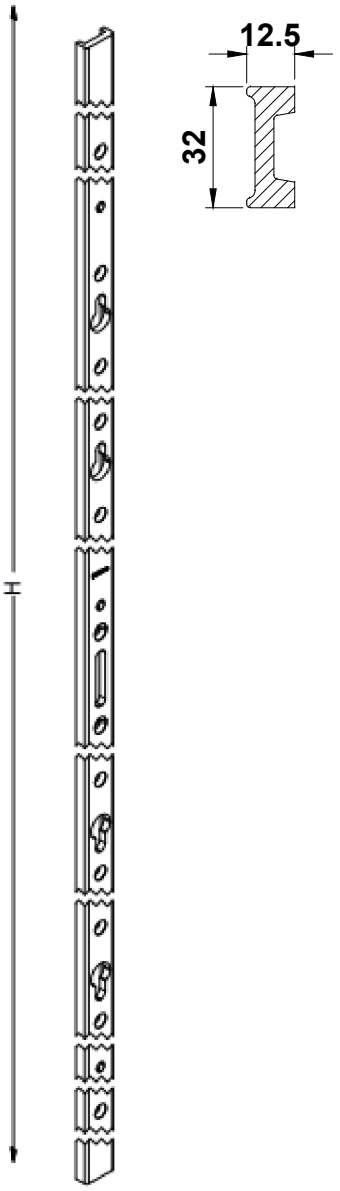	**PAS24 Multi-Point Keeps** **ACSZ122** 2170mm Full Height Keep for ACSZ024 **ACSZ124** 2770mm Full Height Keep for ACSZ024 **ACSZ126** 1970mm Full Height Keep for ACSZ025 **ACSZ128** 2570mm Full Height Keep for ACSZ025 **ACSZ130** 2370mm Full Height Keep for ACSZ026 **ACSZ132** 2970mm Full Height Keep for ACSZ026	1	each	VG520 VG920	MF SA KL HP SSC SMC W Z PC
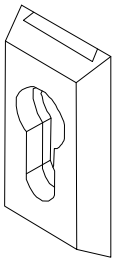	**ACSZ400** Security Escutcheon	1	each	ACSZ007-9 ACSZ827 ACSZ836 ACSZ837 ACSZ838 ACSZ839	MF SA ✓ KL ✓ HP ✓ SSC SMC W ✓ Z ✓ PC

T-BARS
ACVG65=2.5mm
ACVG66=3.0mm
ACVL150=4.0mm

Screw (Grub)

MF	= Mill Finish	W	= White
SA	= Silver Anodised	Z	= Black
KL	= Basic Colour		
HP	= Special Colour		
SSC	= Smooth Satin Chrome		
SMC	= Smokey Chrome		
PC	= Polished Chrome		

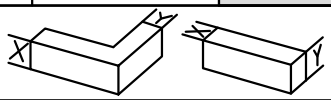

Image	Part Code	Pack	Unit	Application	Colour	
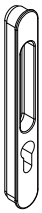	**ACSZ750** **External Flush Finger Pull High Security Handle** **If installing a pair (ACSZ750 + ACSZ751), please order ACET133 machine screws in addition.**	**1**	**each**	**ACSZ040** **ACSZ041** **ACSZ042**	MF SA KL HP SSC SMC W Z PC	 ✓ ✓ ✓ ✓ ✓
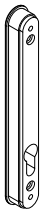	**ACSZ751** **Internal Flush Finger Pull High Security Handle** **If installing a pair (ACSZ750 + ACSZ751), please order ACET133 machine screws in addition.**	**1**	**each**	**ACSZ040** **ACSZ041** **ACSZ042**	MF SA KL HP SSC SMC W Z PC	 ✓ ✓ ✓ ✓ ✓
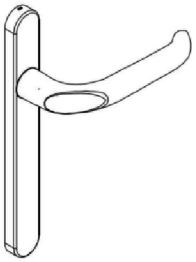	**ACSZ800** **External Handle without Cylinder**	**1**	**each**	**ACSZ007** **ACSZ008** **ACSZ009** **ACSZ010**	MF SA KL HP SSC SMC W Z PC	 ✓ ✓ ✓ ✓ ✓
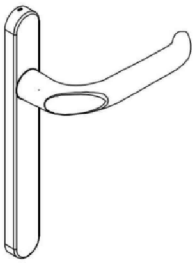	**ACSZ801** **Internal Handle without Cylinder**	**1**	**each**	**ACSZ007** **ACSZ008** **ACSZ009** **ACSZ010**	MF SA KL HP SSC SMC W Z PC	 ✓ ✓ ✓ ✓ ✓
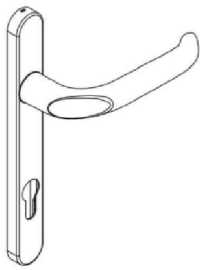	**ACSZ802** **External Handle with Cylinder**	**1**	**each**	**ACSZ007** **ACSZ008** **ACSZ009** **ACSZ010**	MF SA KL HP SSC SMC W Z PC	 ✓ ✓ ✓ ✓ ✓

T-BARS
ACVG65=2.5mm
ACVG66=3.0mm
ACVL150=4.0mm

Screw (Grub)

MF = Mill Finish
SA = Silver Anodised
KL = Basic Colour
HP = Special Colour
SSC = Smooth Satin Chrome
SMC = Smokey Chrome
PC = Polished Chrome
W = White
Z = Black

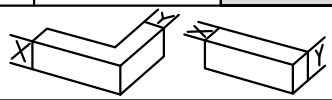

Image	Part Code	Pack	Unit	Application	Colour	
	**ACSZ803** **Internal Handle with Cylinder**	1	each	**ACSZ007** **ACSZ008** **ACSZ009** **ACSZ010**	MF SA KL HP SSC SMC W Z PC	 ✓ ✓ ✓ ✓ ✓
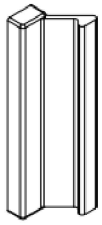	**ACSZ823** **External Pull Handle**	1	each		MF SA KL HP SSC SMC W Z PC	 ✓ ✓ ✓ ✓ ✓
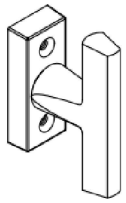	**ACSZ827** **Internal 'T' Handle with Short Backplate** **To be used on Internal Sash only**	1	each	**ACSZ007** **ACSZ008** **ACSZ009** **ACSZ010**	MF SA KL HP SSC SMC W Z PC	 ✓ ✓ ✓ ✓ ✓
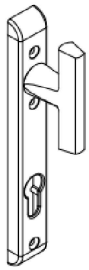	**ACSZ830** **Internal 'T' Handle with Cylinder Cover** **To be used on Internal Sash only**	1	each	**ACSZ007** **ACSZ008** **ACSZ009** **ACSZ010**	MF SA KL HP SSC SMC W Z PC	 ✓ ✓ ✓ ✓ ✓
	**ACSZ833** **Long Backplate**	1	each	**ACSZ800** **ACSZ802** **ACSZ804** **ACSZ835**	MF SA KL HP SSC SMC W Z PC	 ✓ ✓ ✓ ✓ ✓

T-BARS
ACVG65=2.5mm
ACVG66=3.0mm
ACVL150=4.0mm

Screw (Grub)

MF = Mill Finish
SA = Silver Anodised
KL = Basic Colour
HP = Special Colour
SSC = Smooth Satin Chrome
SMC = Smokey Chrome
PC = Polished Chrome
W = White
Z = Black

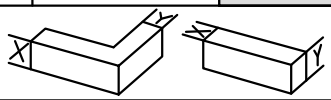

Image	Part Code	Pack	Unit	Application	Colour	
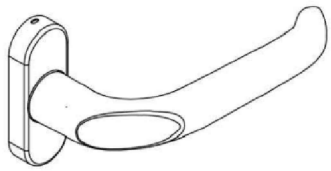	**ACSZ836** **Internal Door Handle with Short Backplate**	1	each	ACSZ007-9 ACSZ837 ACSZ838	MF	
					SA	✓
					KL	✓
					HP	✓
					SSC	
					SMC	
					W	✓
					Z	✓
					PC	
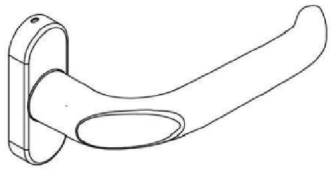	**ACSZ837** **External Door Handle with Short Backplate**	1	each	ACSZ007-9 ACSZ836 ACSZ838	MF	
					SA	✓
					KL	✓
					HP	✓
					SSC	
					SMC	
					W	✓
					Z	✓
					PC	
	**ACSZ839** **Escutcheon**	1	each	ACSZ836 ACSZ837	MF	
					SA	✓
					KL	✓
					HP	✓
					SSC	
					SMC	
					W	✓
					Z	✓
					PC	
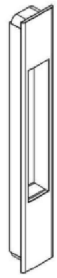	**ACSZ841** **External Finger Pull** **Must be used with internal handle.**	1	each	ACSZ801 ACSZ803 ACSZ830	MF	
					SA	✓
					KL	✓
					HP	✓
					SSC	
					SMC	
					W	✓
					Z	✓
					PC	
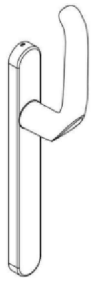	**ACSZ850** **External Fixed Handle for Secondary Door**	1	each	ACSZ851	MF	
					SA	✓
					KL	✓
					HP	✓
					SSC	
					SMC	
					W	✓
					Z	✓
					PC	

T-BARS
ACVG65=2.5mm
ACVG66=3.0mm
ACVL150=4.0mm

Screw (Grub)

MF = Mill Finish
SA = Silver Anodised
KL = Basic Colour
HP = Special Colour
SSC = Smooth Satin Chrome
SMC = Smokey Chrome
PC = Polished Chrome
W = White
Z = Black

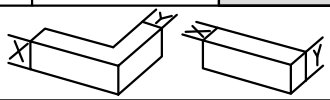

Image	Part Code	Pack	Unit	Application	Colour	
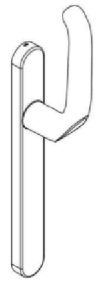	**ACSZ851** **Internal Fixed Handle for Secondary Door**	1	each	ACSZ850	MF	
					SA	✓
					KL	✓
					HP	✓
					SSC	
					SMC	
					W	✓
					Z	✓
					PC	
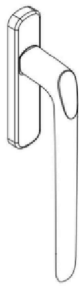	**ACSZ860** **External Lift & Slide Handle without Cylinder**	1	each	ACSZ861 ACVG277 ACVG278 ACVG279	MF	
					SA	✓
					KL	✓
					HP	✓
					SSC	
					SMC	
					W	✓
					Z	✓
					PC	
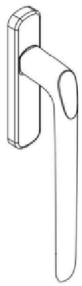	**ACSZ861** **Internal Lift & Slide Handle without Cylinder**	1	each	ACSZ860 ACSZ870 ACSZ871 ACVG277 ACVG278 ACVG279	MF	
					SA	✓
					KL	✓
					HP	✓
					SSC	
					SMC	
					W	✓
					Z	✓
					PC	
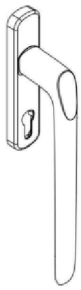	**ACSZ862** **External Lift & Slide Handle with Cylinder**	1	each	ACSZ863 ACVG277 ACVG278 ACVG279	MF	
					SA	✓
					KL	✓
					HP	✓
					SSC	
					SMC	
					W	✓
					Z	✓
					PC	
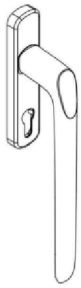	**ACSZ863** **Internal Lift & Slide Handle with Cylinder**	1	each	ACSZ862 ACSZ870 ACSZ871 ACVG277 ACVG278 ACVG279	MF	
					SA	✓
					KL	✓
					HP	✓
					SSC	
					SMC	
					W	✓
					Z	✓
					PC	

T-BARS
ACVG65=2.5mm
ACVG66=3.0mm
ACVL150=4.0mm

Screw (Grub)

MF = Mill Finish
SA = Silver Anodised
KL = Basic Colour
HP = Special Colour
SSC = Smooth Satin Chrome
SMC = Smokey Chrome
PC = Polished Chrome
W = White
Z = Black

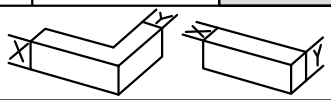

Image	Part Code	Pack	Unit	Application	Colour	
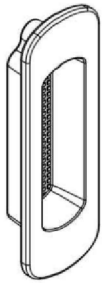	**ACSZ871** **External Short Finger Pull** **Must Be Used With Internal Handle**	**1**	**each**	**ACSZ861** **ACSZ863** **ACVG277** **ACVG278** **ACVG279**	MF SA KL HP SSC SMC W Z PC	 ✓ ✓ ✓ ✓ ✓
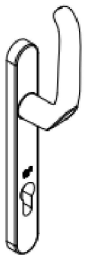	**ACSZ882** **External Security Handle**	**1**	**each**	**ACSZ024** **ACSZ025** **ACSZ026** **ACET237**	MF SA KL HP SSC SMC W Z PC	 ✓ ✓ ✓ ✓ ✓
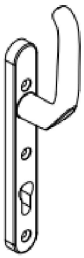	**ACSZ883** **Internal Security Handle**	**1**	**each**	**ACSZ024** **ACSZ025** **ACSZ026** **ACET237**	MF SA KL HP SSC SMC W Z PC	 ✓ ✓ ✓ ✓ ✓
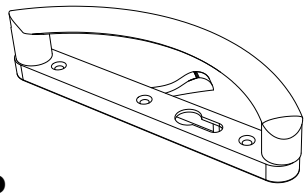 **R**	**ACSZ895L/R** **Internal Handle with Cylinder Cut-out** **Note: SA version is RAL9006**	**1**	**each**	**ACSZ841** **ACZS898L/R**	MF SA KL HP SSC SMC W Z PC	 ✓ ✓ ✓ ✓ ✓
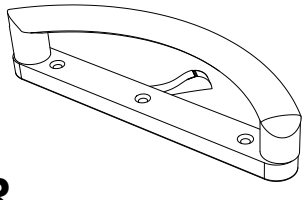 **R**	**ACSZ896L/R** **Internal Handle without Cylinder Cut-out** **Note: SA version is RAL9006**	**1**	**each**	**ACSZ841**	MF SA KL HP SSC SMC W Z PC	 ✓ ✓ ✓ ✓ ✓

T-BARS
ACVG65=2.5mm
ACVG66=3.0mm
ACVL150=4.0mm

Screw (Grub)

MF = Mill Finish
SA = Silver Anodised
KL = Basic Colour
HP = Special Colour
SSC = Smooth Satin Chrome
SMC = Smokey Chrome
PC = Polished Chrome
W = White
Z = Black

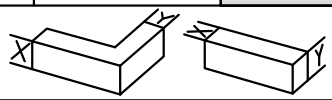

Image	Part Code	Pack	Unit	Application	Colour	
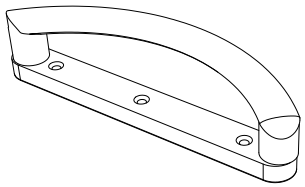 R	**ACSZ897L/R** **Dummy Internal Handle** **Note: SA version is RAL9006**	1	each	ACSZ899L/R	MF	
					SA	✓
					KL	✓
					HP	✓
					SSC	
					SMC	
					W	✓
					Z	✓
					PC	
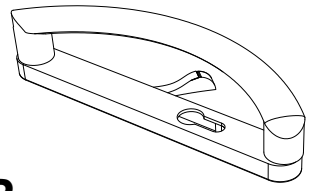 R	**ACSZ898L/R** **External Handle with Cylinder Cut-out** **Note: SA version is RAL9006**	1	each	ACSZ895L/R	MF	
					SA	✓
					KL	✓
					HP	✓
					SSC	
					SMC	
					W	✓
					Z	✓
					PC	
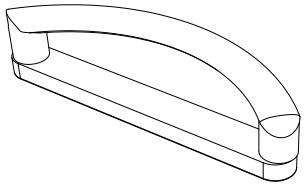 R	**ACSZ899L/R** **Dummy External Handle** **Note: SA version is RAL9006**	1	each	ACSZ897L/R	MF	
					SA	✓
					KL	✓
					HP	✓
					SSC	
					SMC	
					W	✓
					Z	✓
					PC	
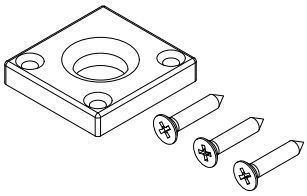	**ACUG143** **Shootbolt Keep** **Fixings Included**	1	each	VG581 VG580	MF	
					SA	
					KL	
					HP	
					SSC	
					SMC	
					W	
					Z	
					PC	
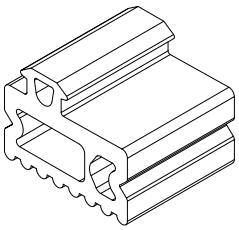	**ACUG160** **Sealing Piece**	100	Pack	VG516	MF	
					SA	
					KL	
					HP	
					SSC	
					SMC	
					W	
					Z	
					PC	

T-BARS
ACVG65=2.5mm
ACVG66=3.0mm
ACVL150=4.0mm

Screw (Grub)

MF = Mill Finish
SA = Silver Anodised
KL = Basic Colour
HP = Special Colour
SSC = Smooth Satin Chrome
SMC = Smokey Chrome
PC = Polished Chrome
W = White
Z = Black

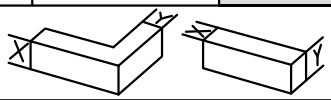

Image	Part Code	Pack	Unit	Application	Colour	
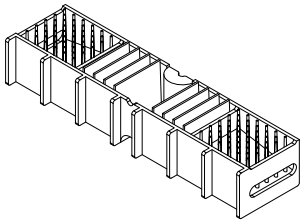	**ACUG631** **Mono Rail**	**10**	**Pack**	**VG610** **VG618**	MF	
					SA	
					KL	
					HP	
					SSC	
					SMC	
					W	
					Z	✓
					PC	
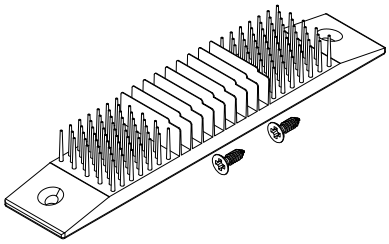	**ACUG632** **Closer** **Mono-Rail**	**10**	**Pack**	**VG610** **VG618**	MF	
					SA	
					KL	
					HP	
					SSC	
					SMC	
					W	
					Z	✓
					PC	
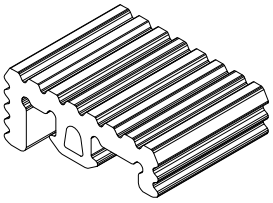	**ACUG633** **Gasket**	**100**	**m**	**VG610** **VG615** **VG616**	MF	
					SA	
					KL	
					HP	
					SSC	
					SMC	
					W	
					Z	
					PC	
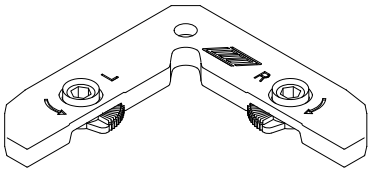	**ACUN020** **Rebate Support**	**10**	**Pack**	**VG520** **VG920** **VG521N** **VG921** **VG610**	MF	
					SA	
					KL	
					HP	
					SSC	
					SMC	
					W	
					Z	✓
					PC	
	**ACUN021** **Rebate Support**	**100**	**Pack**		MF	
					SA	
					KL	
					HP	
					SSC	
					SMC	
					W	
					Z	
					PC	

T-BARS
ACVG65=2.5mm
ACVG66=3.0mm
ACVL150=4.0mm

Screw (Grub)

MF = Mill Finish
SA = Silver Anodised
KL = Basic Colour
HP = Special Colour
SSC = Smooth Satin Chrome
SMC = Smokey Chrome
PC = Polished Chrome
W = White
Z = Black

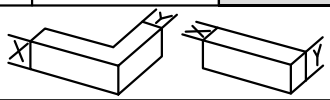

Image	Part Code	Pack	Unit	Application	Colour	
	**ACUN045** **Weep Hole Cover**	**100**	**Pack**		MF	
					SA	
					KL	
					HP	
					SSC	
					SMC	
					W	
					Z	
					PC	
	**ACUN23X** **Screw Fixing Lug** **ACUN230: B = 160MM** **ACUN232: B = 240MM** **ACUN233: B = 280MM**	**100**	**Pack**		MF	
					SA	
					KL	
					HP	
					SSC	
					SMC	
					W	
					Z	
					PC	
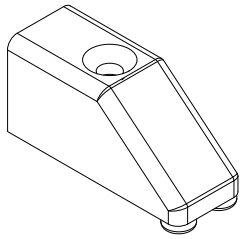	**ACUN348** **Door Stop/Buffer** **Note: SA version is RAL9006**	**1**	**each**	**VG520**	MF	✓
					SA	✓
					KL	✓
					HP	✓
					SSC	
					SMC	
					W	✓
					Z	✓
					PC	
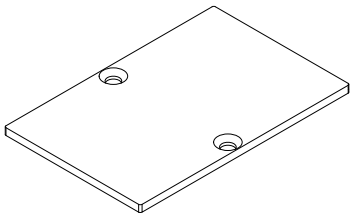	**ACUN500** **Cover Plate** **(DIN7982 3.5x13 Screws)**	**1**	**each**	**UN500** **UN510**	MF	✓
					SA	✓
					KL	✓
					HP	✓
					SSC	
					SMC	
					W	
					Z	
					PC	
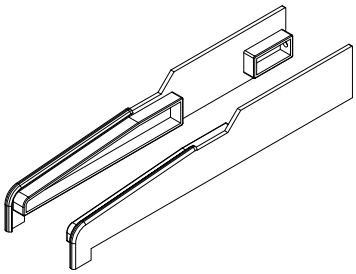	**ACUN3040** **Cast Cill End Caps**	**10**	**Pairs**	**UN3040**	MF	✓
					SA	
					KL	✓
					HP	✓
					SSC	
					SMC	
					W	✓
					Z	✓
					PC	

T-BARS
ACVG65=2.5mm
ACVG66=3.0mm
ACVL150=4.0mm

Screw (Grub)

MF = Mill Finish
SA = Silver Anodised
KL = Basic Colour
HP = Special Colour
SSC = Smooth Satin Chrome
SMC = Smokey Chrome
PC = Polished Chrome
W = White
Z = Black

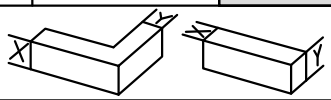

Image	Part Code	Pack	Unit	Application	Colour
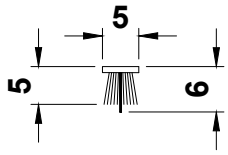	**ACUN3215** **Black Woolpile with Fin**	**100**	**m**	**VG520** **VG521** **VG586** **VG920** **VG5011** **VG5013** **VG5051**	MF SA KL HP SSC SMC W Z PC
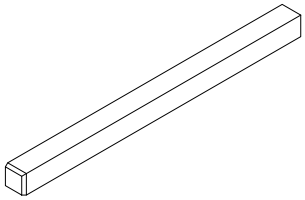	**ACUN3586** **60 x 7 x 7mm Spindle**	**1**	**each**	**ACVG649** **ACVG319**	MF SA KL HP SSC SMC W Z PC
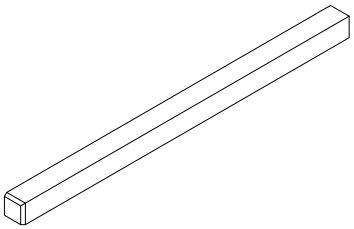	**ACUN3588** **88 x 7 x 7mm Spindle**	**1**	**each**	**ACVG649** **ACVG319** **ACVG320**	MF SA KL HP SSC SMC W Z PC
	**ACUN3610** **Single Component Adhesive**	**1**	**each**	**VG534** **VG535** **VG536** **VG539**	MF SA KL HP SSC SMC W Z PC
	**ACUN3612** **Surface Activator (1L)**	**1**	**each**	**VG534** **VG535** **VG536** **VG539**	MF SA KL HP SSC SMC W Z PC

T-BARS
ACVG65=2.5mm
ACVG66=3.0mm
ACVL150=4.0mm

Screw (Grub)

MF = Mill Finish
SA = Silver Anodised
KL = Basic Colour
HP = Special Colour
SSC = Smooth Satin Chrome
SMC = Smokey Chrome
PC = Polished Chrome
W = White
Z = Black

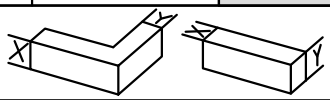

Visoglide Plus

ACCESSORIES : PHOTOS & DRAWINGS

Image	Part Code	Pack	Unit	Application	Colour	
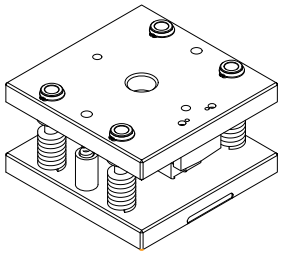	**ACUN3916** **Bead Punch Tool**	1	each	VG960 VG960G	MF SA KL HP SSC SMC W Z PC	
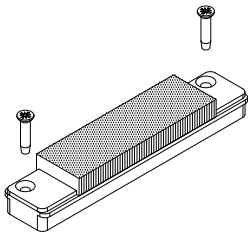	**ACVG30** **Interlock Plug**	1	each	VG5016 VG5017 VG5018 VG5019	MF SA KL HP SSC SMC W Z PC	
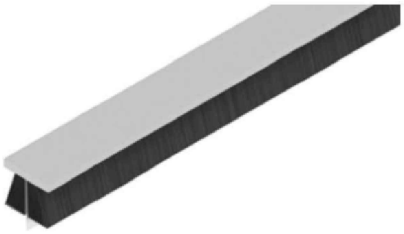	**ACVG42** **Woolpile** **H = 5mm**	100	m		MF SA KL HP SSC SMC W Z PC	
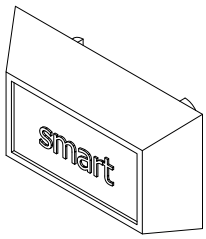	**ACVG45N** **Weep Hole Cover**	100 2500	Pack Pack		MF SA KL HP SSC SMC W ✓ Z ✓ PC	
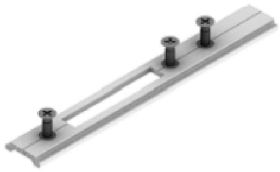	**ACVG81** **Fixation Plates For Lock**	1	each	Keeps VG540 VG541 VG542	MF SA KL HP SSC SMC W Z PC	

T-BARS
ACVG65=2.5mm
ACVG66=3.0mm
ACVL150=4.0mm

Screw (Grub)

MF	= Mill Finish	W	= White
SA	= Silver Anodised	Z	= Black
KL	= Basic Colour		
HP	= Special Colour		
SSC	= Smooth Satin Chrome		
SMC	= Smokey Chrome		
PC	= Polished Chrome		

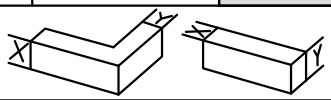

ISSUE: JANUARY 2026

Image	Part Code	Pack	Unit	Application	Colour
	**ACVG134** **Set Screws For Handle** **4 per Pack**	**1**	**Pack**	**VG520**	MF SA KL HP SSC SMC W Z PC
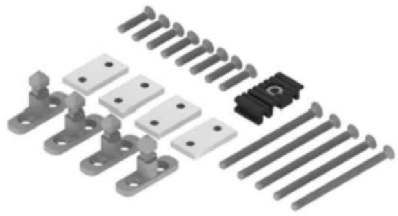	**ACVG240** **Basic Set Lift & Sliding Door 4 Door**	**1**	**Pack**	**VG542**	MF SA KL HP SSC SMC W Z PC
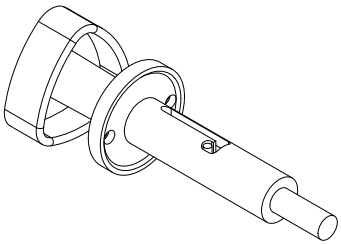	**ACVG256** **Interlock Lock**	**1**	**Each**		MF SA KL HP SSC SMC W Z PC
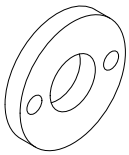	**ACVG257** **ACVG256 Keep**	**1**	**Each**		MF SA KL HP SSC SMC W Z PC
	**ACVG268** **Connecting Rod Guide Bracket**	**1**	**each**	**ACVG269** **ACVG270** **ACVG271** **ACVG272** **ACVG273**	MF SA KL HP SSC SMC W Z PC

T-BARS
ACVG65=2.5mm
ACVG66=3.0mm
ACVL150=4.0mm

Screw (Grub)

MF = Mill Finish
SA = Silver Anodised
KL = Basic Colour
HP = Special Colour
SSC = Smooth Satin Chrome
SMC = Smokey Chrome
PC = Polished Chrome
W = White
Z = Black

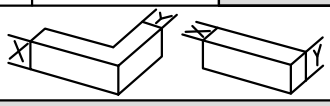

Image	Part Code	Pack	Unit	Application	Colour
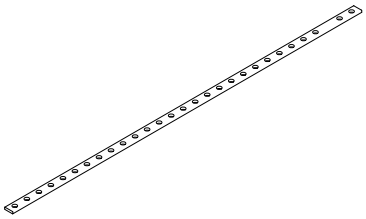	**ACVG269** **Connecting Rod** **700mm<W<1250mm**	**1**	**each**	**ACVG5285**	MF SA KL HP SSC SMC W Z PC
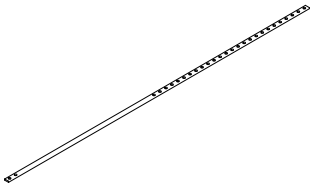	**ACVG270** **Connecting Rod** **1200mm<W<1750mm**	**1**	**each**	**ACVG5285**	MF SA KL HP SSC SMC W Z PC
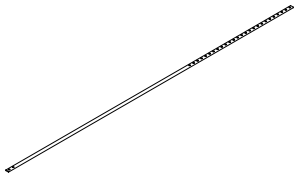	**ACVG271** **Connecting Rod** **1700mm<W<2250mm**	**1**	**each**	**ACVG5285**	MF SA KL HP SSC SMC W Z PC
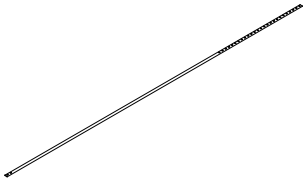	**ACVG272** **Connecting Rod** **2200mm<W<2750mm**	**1**	**each**	**ACVG5285**	MF SA KL HP SSC SMC W Z PC
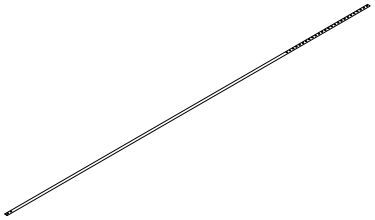	**ACVG273** **Connecting Rod** **2700mm<W<3200mm**	**1**	**each**	**ACVG5285**	MF SA KL HP SSC SMC W Z PC

T-BARS
ACVG65=2.5mm
ACVG66=3.0mm
ACVL150=4.0mm

Screw (Grub)

MF = Mill Finish
SA = Silver Anodised
KL = Basic Colour
HP = Special Colour
SSC = Smooth Satin Chrome
SMC = Smokey Chrome
PC = Polished Chrome
W = White
Z = Black

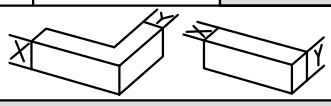

Image	Part Code	Pack	Unit	Application	Colour
	**ACVG277** **Drive Gear** **Lift & Sliding Door** **1718mm<H<2218mm**	**1**	**each**	**ACVG280N**	MF SA KL HP SSC SMC W Z PC
	**ACVG278** **Drive Gear** **Lift & Sliding Door** **2118mm<H<2618mm**	**1**	**each**	**ACVG5285**	MF SA KL HP SSC SMC W Z PC
	**ACVG279** **Drive Gear** **Lift & Sliding Door** **H<2418mm**	**1**	**each**	**ACVG5285**	MF SA KL HP SSC SMC W Z PC
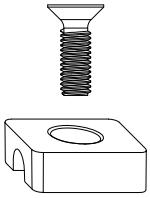	**ACVG281N** **Double Door Locking Point (Bottom)**	**1**	**each**	**VG521N** **ACVG5285**	MF SA KL HP SSC SMC W Z PC
	**ACVG305** **1800mm Multipoint lock**	**1**	**each**	**ACVG306** **ACVG307** **ACVG310** **ACVG312** **ACVG315** **ACVG316** **ACVG317**	MF SA KL HP SSC SMC W Z PC

T-BARS
ACVG65=2.5mm
ACVG66=3.0mm
ACVL150=4.0mm

Screw (Grub)

MF	**= Mill Finish**	**W**	**= White**
SA	**= Silver Anodised**	**Z**	**= Black**
KL	**= Basic Colour**		
HP	**= Special Colour**		
SSC	**= Smooth Satin Chrome**		
SMC	**= Smokey Chrome**		
PC	**= Polished Chrome**		

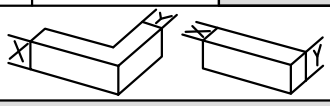

Image	Part Code	Pack	Unit	Application	Colour
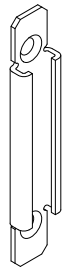	**ACVG306** **Keeps for ACVG305 Lock**	1	each	ACVG305	MF SA KL HP SSC SMC W Z PC
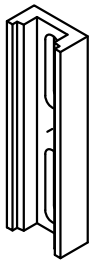	**ACVG307** **Packer for fitting ACVG305**	1	each	ACVG305	MF SA KL HP SSC SMC W Z PC
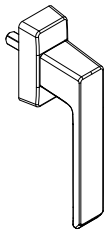	**ACVG310** **Delta Handle**	1	each	ACVG305 ACVG313 ACVG316	MF SA KL HP SSC SMC W Z PC
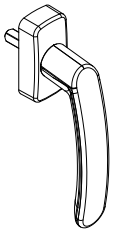	**ACVG312** **Handle for ACVG305**	1	each	ACVG305 ACVG313 ACVG317	MF SA KL HP SSC SMC W Z PC
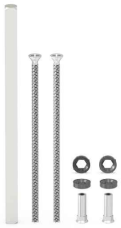	**ACVG313** **Handle Fixing Kit**	1	each	ACVG305 ACVG310 ACVG312 ACVG315	MF SA KL HP SSC SMC W Z PC

T-BARS
ACVG65=2.5mm
ACVG66=3.0mm
ACVL150=4.0mm

Screw (Grub)

MF = Mill Finish
SA = Silver Anodised
KL = Basic Colour
HP = Special Colour
SSC = Smooth Satin Chrome
SMC = Smokey Chrome
PC = Polished Chrome
W = White
Z = Black

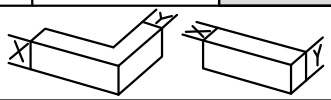

Image	Part Code	Pack	Unit	Application	Colour	
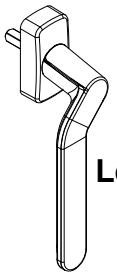 Left Hand Shown	**ACVG315L/R** Cranked Handle forACVG305	1	each	ACVG305 ACVG313 ACVG317	MF SA KL HP SSC SMC W Z PC	
	**ACVG316** Escutcheon to match ACVG312 handle 6mm Projection	1	each	ACVG305 ACVG310 ACCY3535	MF SA KL HP SSC SMC W Z PC	
	**ACVG317** Sirius Escutcheon 8.5mm Projection	1	each	ACVG305 ACVG312 ACVG315 ACCY3535	MF SA KL HP SSC SMC W Z PC	
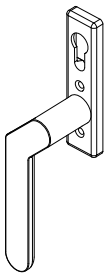	**ACVG319(L/R)** Internal Cranked Handle As Viewed from Inside 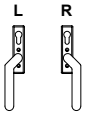	1	each	ACVG649 ACVG320L/R ACUN3586 ACUN3587 ACUN3588 ACUN3589	MF SA KL HP SSC SMC W Z PC	 ✓ ✓ ✓ ✓
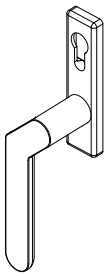	**ACVG320(L/R)** External Cranked Handle As Viewed from Outside 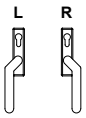	1	each	ACVG649 ACVG319L/R ACUN3586 ACUN3587 ACUN3588 ACUN3589	MF SA KL HP SSC SMC W Z PC	 ✓ ✓ ✓ ✓

T-BARS
ACVG65=2.5mm
ACVG66=3.0mm
ACVL150=4.0mm

Screw (Grub)

MF	= Mill Finish	W	= White
SA	= Silver Anodised	Z	= Black
KL	= Basic Colour		
HP	= Special Colour		
SSC	= Smooth Satin Chrome		
SMC	= Smokey Chrome		
PC	= Polished Chrome		

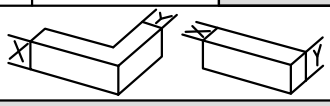

Image	Part Code	Pack	Unit	Application	Colour	
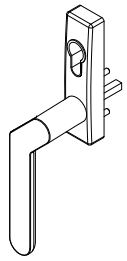	**ACVG323(L/R)** **Hidden Fix Handle** **As Viewed** 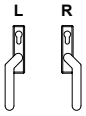	1	each	ACVG649 ACVG313	MF SA KL HP SSC SMC W Z PC	 ✓ ✓ ✓ ✓
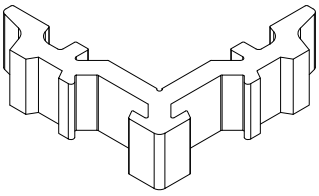	**ACVG509** **Crimp Corner Cleat**	24	Pack	VG5010 VG5011 VG5012 VG5013	MF SA KL HP SSC SMC W Z PC	
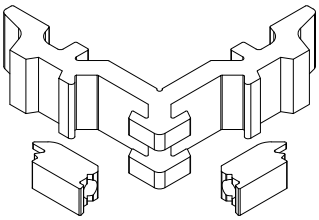	**ACVG510** **Mechanical Corner Cleat**	24	Pack	VG5010 VG5011 VG5012 VG5013	MF SA KL HP SSC SMC W Z PC	
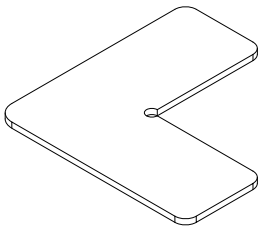	**ACVG520** **Stainless Steel Chevron**	100	Pack	VG5010 VG5011 VG5012 VG5013 VG520 VG920	MF SA KL HP SSC SMC W Z PC	
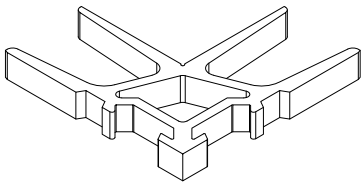	**ACVG521N** **Crimp Corner Cleat**	24	Pack	VG521N VG920	MF SA KL HP SSC SMC W Z PC	

T-BARS
ACVG65=2.5mm
ACVG66=3.0mm
ACVL150=4.0mm

Screw (Grub)

MF = Mill Finish
SA = Silver Anodised
KL = Basic Colour
HP = Special Colour
SSC = Smooth Satin Chrome
SMC = Smokey Chrome
PC = Polished Chrome
W = White
Z = Black

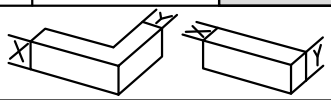

Image	Part Code	Pack	Unit	Application	Colour	
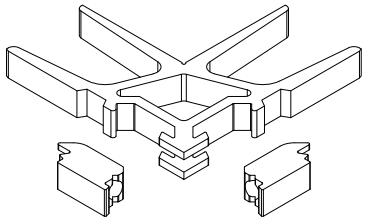	**ACVG521NS** **Mechanical Corner Cleat**	**24**	**Pack**	**VG521N** **VG920**	MF	
					SA	
					KL	
					HP	
					SSC	
					SMC	
					W	
					Z	
					PC	
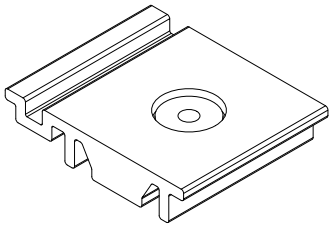	**ACVG523** **M4 Fixing plate**	**50**	**Pack**	**VG520** **VG920**	MF	
					SA	
					KL	
					HP	
					SSC	
					SMC	
					W	
					Z	✓
					PC	
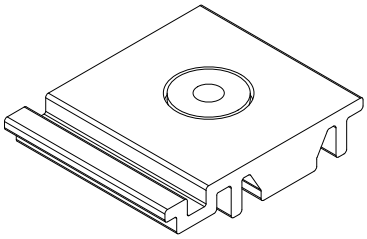	**ACVG524** **M5 Fixing Plate.**	**50**	**Pack**	**VG520** **VG920**	MF	
					SA	
					KL	
					HP	
					SSC	
					SMC	
					W	
					Z	✓
					PC	
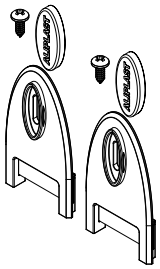	**ACVG531** **Lift & Slide** **Interlock Cover Cap** **Black only**	**2**	**Pack**	**VG530**	MF	
					SA	
					KL	
					HP	
					SSC	
					SMC	
					W	
					Z	✓
					PC	
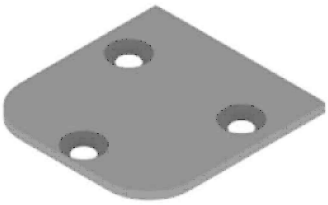	**ACVG532** **Cover Plate**	**1**	**each**	**VG532** **VG533**	MF	✓
					SA	
					KL	✓
					HP	✓
					SSC	
					SMC	
					W	✓
					Z	✓
					PC	

T-BARS
ACVG65=2.5mm
ACVG66=3.0mm
ACVL150=4.0mm

Screw (Grub)

MF = Mill Finish
SA = Silver Anodised
KL = Basic Colour
HP = Special Colour
SSC = Smooth Satin Chrome
SMC = Smokey Chrome
PC = Polished Chrome
W = White
Z = Black

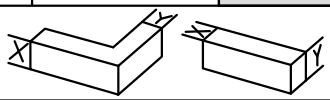

Image	Part Code	Pack	Unit	Application	Colour	
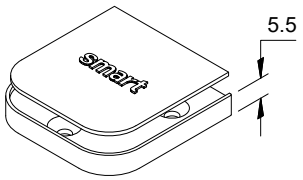	**ACVG533** **VG533 End Cap with Screws**	**2**	**Pack**	**VG532** **VG533**	MF SA KL HP SSC SMC W Z PC	 ✓ ✓
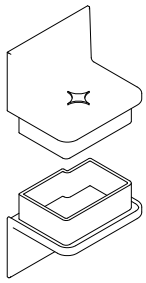	**ACVG535** **End Cap with Upstand**	**1**	**Pair**	**VG534** **VG536**	MF SA KL HP SSC SMC W Z PC	 ✓ ✓
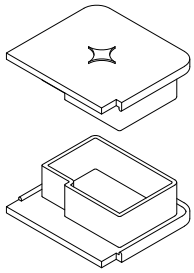	**ACVG536** **VG536 Slim Interlock End Cap**	**1**	**Pair**	**VG534** **VG536**	MF SA KL HP SSC SMC W Z PC	 ✓ ✓
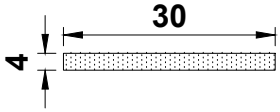	**ACVG537** **30 x 4mm Adhesive Foam Tape** **Store at room temperature away from direct sun light**	**20M**	**each**	**VG534** **VG535** **VG536** **VG539**	MF SA KL HP SSC SMC W Z PC	
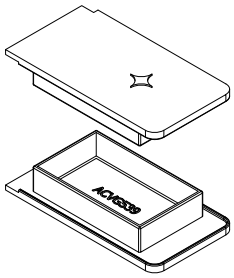	**ACVG539** **VG539 End Cap**	**1**	**Pair**	**VG539**	MF SA KL HP SSC SMC W Z PC	 ✓ ✓

T-BARS
ACVG65=2.5mm
ACVG66=3.0mm
ACVL150=4.0mm

Screw (Grub)

MF = Mill Finish
SA = Silver Anodised
KL = Basic Colour
HP = Special Colour
SSC = Smooth Satin Chrome
SMC = Smokey Chrome
PC = Polished Chrome
W = White
Z = Black

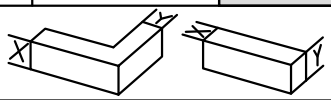

Image	Part Code	Pack	Unit	Application	Colour	
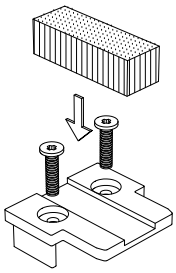	**ACVG540** **Meeting Stile End Cap with Brush Pile**	**2**	**Pack**	**VG540 VG541**	MF SA KL HP SSC SMC W Z PC	 ✓
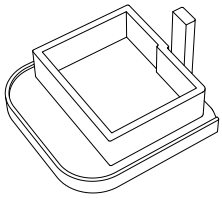	**ACVG541** **End Cap for VG541** **2 Per Set**	**1**	**Pair**	**VG541 ACVG540**	MF SA KL HP SSC SMC W Z PC	 ✓ ✓
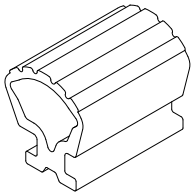	**ACVG542** **Low Friction Gasket**	**100**	**m**	**VG520 VG521N**	MF SA KL HP SSC SMC W Z PC	 ✓
	**ACVG543** **End Part Double Casement Profile**	**2**	**Pack**	**VG542**	MF SA KL HP SSC SMC W Z PC	
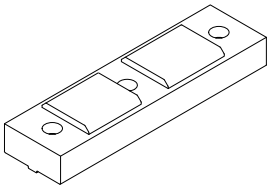	**ACVG544** **Support Block for Sash**	**10**	**Pack**	**VG520 VG920**	MF SA KL HP SSC SMC W Z PC	 ✓

T-BARS
ACVG65=2.5mm
ACVG66=3.0mm
ACVL150=4.0mm

Screw (Grub)

MF = Mill Finish
SA = Silver Anodised
KL = Basic Colour
HP = Special Colour
SSC = Smooth Satin Chrome
SMC = Smokey Chrome
PC = Polished Chrome
W = White
Z = Black

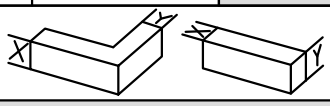

Image	Part Code	Pack	Unit	Application	Colour	
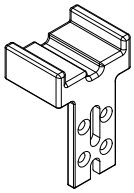	**ACVG546** **Top Guide/Anti-Lift Block for Slim Interlock**	**4**	**Pack**	**VG535** **VG536** **VG539** **VG610** **VG618**	MF SA KL HP SSC SMC W Z PC	 ✓
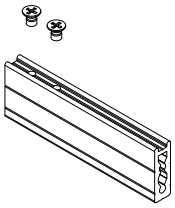	**ACVG547** **Slim Interlock Fixing Bracket**	**8**	**Pack**	**VG520** **VG535** **VG536** **VG539** **VG590** **VG592**	MF SA KL HP SSC SMC W Z PC	
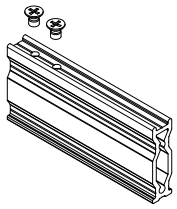	**ACVG548** **Slim Interlock Fixing Bracket for Lift & Slide**	**8**	**Pack**	**VG521N** **VG534** **VG535** **VG536** **VG539** **VG590** **VG592**	MF SA KL HP SSC SMC W Z PC	
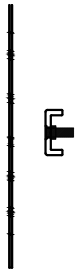	**ACVG550** **Adjustable Full Height Keep for ACSZ007 only** **Available in powder coated or silver anodised finish.** **Not covered by Kitemark.**	**1**	**each**	**ACSZ007**	MF SA KL HP SSC SMC W Z PC	 ✓ ✓ ✓ ✓ ✓
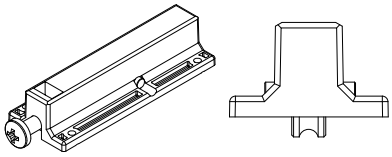	**ACVG555** **Adjustable Roller** **Max Weight 250kg / pair**	**1**	**each**	**VG520** **VG920**	MF SA KL HP SSC SMC W Z PC	

T-BARS
ACVG65=2.5mm
ACVG66=3.0mm
ACVL150=4.0mm

Screw (Grub)

MF	**= Mill Finish**	**W**	**= White**
SA	**= Silver Anodised**	**Z**	**= Black**
KL	**= Basic Colour**		
HP	**= Special Colour**		
SSC	**= Smooth Satin Chrome**		
SMC	**= Smokey Chrome**		
PC	**= Polished Chrome**		

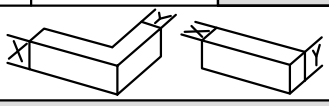

Image	Part Code	Pack	Unit	Application	Colour
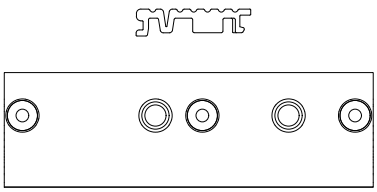	**ACVG557N** **Glass support**	**50**	**Pack**	**VG521N** **VG921**	MF SA KL HP SSC SMC W Z PC
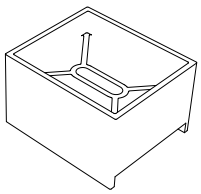	**ACVG558** **Head Extension Packer**	**10**	**Pack**	**All Head Extensions**	MF SA KL HP SSC SMC W Z PC
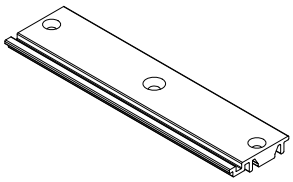	**ACVG559** **Bridge Packer**	**20**	**Pack**	**VG521N** **VG920**	MF SA KL HP SSC SMC W Z PC
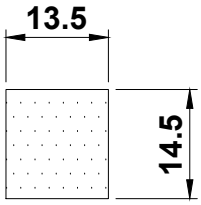	**ACVG560** **Foam Infill for VG520** **1250mm Lengths**	**1**	**each**	**VG520** **VG920**	MF SA KL HP SSC SMC W Z PC
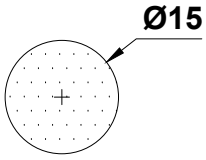	**ACVG561** **Foam Infill for Glass Perimeter**	**100**	**m**	**VG520** **VG521N**	MF SA KL HP SSC SMC W Z PC

T-BARS
ACVG65=2.5mm
ACVG66=3.0mm
ACVL150=4.0mm

Screw (Grub)

MF = Mill Finish
SA = Silver Anodised
KL = Basic Colour
HP = Special Colour
SSC = Smooth Satin Chrome
SMC = Smokey Chrome
PC = Polished Chrome
W = White
Z = Black

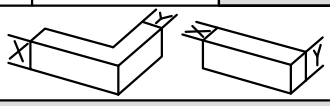

Image	Part Code	Pack	Unit	Application	Colour
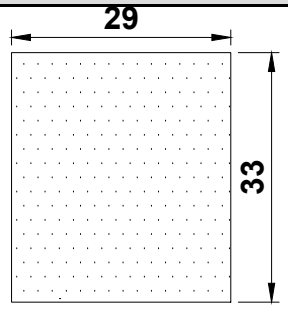	**ACVG562** **Foam Infill for VG530** **1250mm Lengths**	**1**	**each**	**VG530**	MF SA KL HP SSC SMC W Z PC
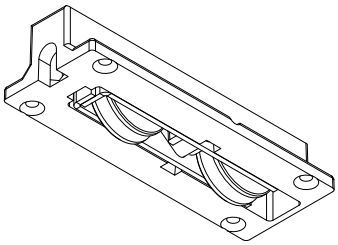	**ACVG565** **Fixed Double Roller** **Max Weight 250kg / pair**	**1**	**each**	**VG520** **VG920**	MF SA KL HP SSC SMC W Z PC
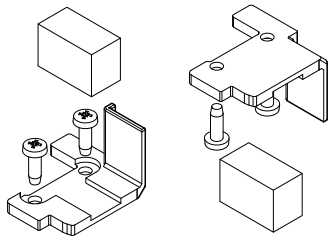	**ACVG569** **End Caps for VG549** **Contains:** **1 pair End Caps** **2 Self Adhesive Brushes** **4 Screws**	**1**	**pair**	**VG520** **VG920** **VG549**	MF SA KL HP SSC SMC W ✓ Z ✓ PC
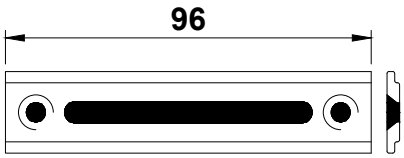	**ACVG571** **Lock Fixing Support**	**1**	**each**	**VG520** **VG920**	MF SA KL HP SSC SMC W Z ✓ PC
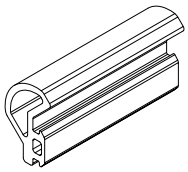	**ACVG576** **Gasket for Floating Corner**	**150**	**m**	**VG580** **VG581**	MF SA KL HP SSC SMC W Z PC

T-BARS
ACVG65=2.5mm
ACVG66=3.0mm
ACVL150=4.0mm

Screw (Grub)

MF = Mill Finish
SA = Silver Anodised
KL = Basic Colour
HP = Special Colour
SSC = Smooth Satin Chrome
SMC = Smokey Chrome
PC = Polished Chrome
W = White
Z = Black

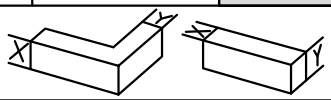

Image	Part Code	Pack	Unit	Application	Colour	
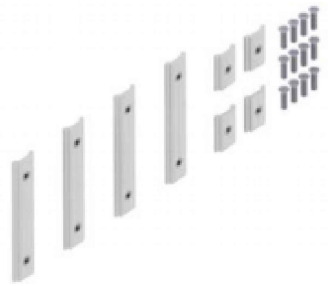	**ACVG580** **Keep Fixing Plates**	**1**	**Pack**	**VG540** **VG542**	MF SA KL HP SSC SMC W Z PC	
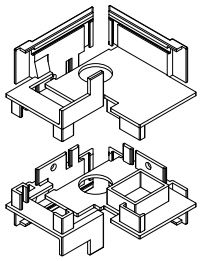	**ACVG581** **End Caps for VG580 & VG581**	**1**	**Pack**	**VG580** **VG581**	MF SA KL HP SSC SMC W Z PC	 ✓ ✓
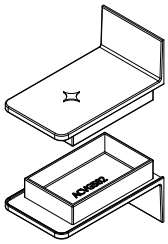	**ACVG582** **VG539 End Cap with Upstand**	**1**	**Pair**	**VG539**	MF SA KL HP SSC SMC W Z PC	
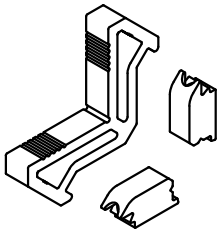	**ACVG583** **Mechanical Cleat**	**24**	**pack**	**VG920** **VG5024**	MF SA KL HP SSC SMC W Z PC	✓
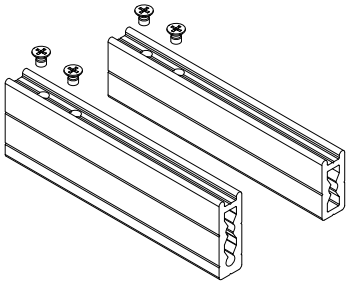	**ACVG586** **Fixing Bracket Kit** **Kit contains:** **4 x ACVG586** **4 x ACVG587**	**1**	**Kit**	**VG534** **VG535** **VG536** **VG539** **VG590** **VG592** **VG920**	MF SA KL HP SSC SMC W Z PC	

T-BARS
ACVG65=2.5mm
ACVG66=3.0mm
ACVL150=4.0mm

Screw (Grub)

MF = Mill Finish
SA = Silver Anodised
KL = Basic Colour
HP = Special Colour
SSC = Smooth Satin Chrome
SMC = Smokey Chrome
PC = Polished Chrome
W = White
Z = Black

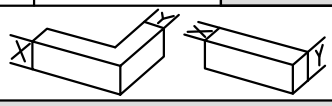

Image	Part Code	Pack	Unit	Application	Colour	
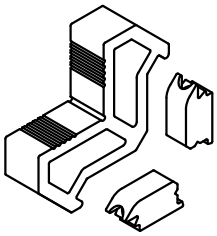	**ACVG589** **Mechanical Cleat**	**24**	**pack**	**VG520** **VG920** **VG5023** **VG5024**	MF SA KL HP SSC SMC W Z PC	 ✓
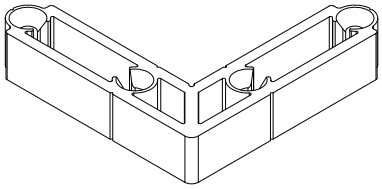	**ACVG590** **90° Corner Cleat** **Pack Contains:** **4 x Corner Cleats** **16 x Screws**	**1**	**Pack**	**VG5010** **VG5011** **VG5012** **VG5013**	MF SA KL HP SSC SMC W Z PC	
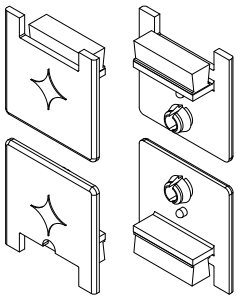	**ACVG591** **Cover cap kit** **Kit contains:** **2 x Top cover caps** **2 x Bottom cover caps** **4 x Self adhesive brush**	**1**	**Kit**	**VG591** **VG592**	MF SA KL HP SSC SMC W Z PC	 ✓ ✓
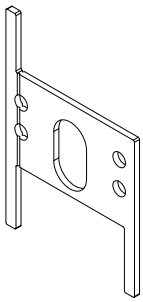	**ACVG593** **VG520 & VG920 End Pad** **Pack contains:** **4 x End pads**	**1**	**Pack**	**VG520** **VG920**	MF SA KL HP SSC SMC W Z PC	 ✓
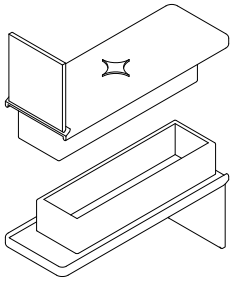	**ACVG594** **VG590 End Cap**	**1**	**Pair**	**VG590**	MF SA KL HP SSC SMC W Z PC	 ✓ ✓

T-BARS
ACVG65=2.5mm
ACVG66=3.0mm
ACVL150=4.0mm

Screw (Grub)

MF = Mill Finish
SA = Silver Anodised
KL = Basic Colour
HP = Special Colour
SSC = Smooth Satin Chrome
SMC = Smokey Chrome
PC = Polished Chrome
W = White
Z = Black

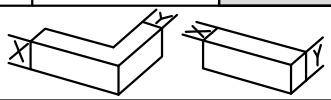

Image	Part Code	Pack	Unit	Application	Colour	
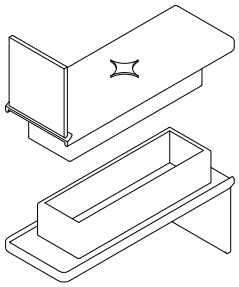	**ACVG595** **VG592 End cap**	**1**	**Pair**	**VG592**	MF	
					SA	
					KL	
					HP	
					SSC	
					SMC	
					W	✓
					Z	✓
					PC	
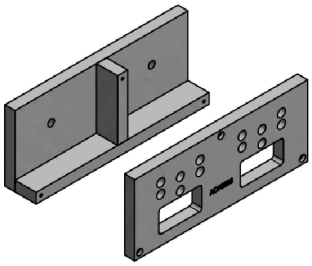	**ACVG596** **Drill Jig**	**1**	**each**	**VG590** **VG592** **VG596**	MF	
					SA	
					KL	
					HP	
					SSC	
					SMC	
					W	
					Z	
					PC	
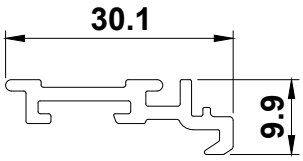	**ACVG597** **Interlock Security Device** **L = 500mm**	**1**	**each**	**VG590** **VG592**	MF	
					SA	
					KL	
					HP	
					SSC	
					SMC	
					W	
					Z	✓
					PC	
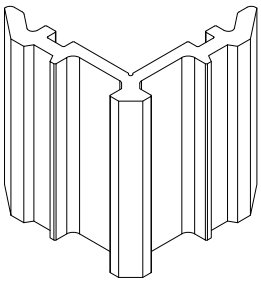	**ACVG610** **Crimp Corner Cleat**	**24**	**Pack**	**VG610**	MF	
					SA	
					KL	
					HP	
					SSC	
					SMC	
					W	
					Z	
					PC	
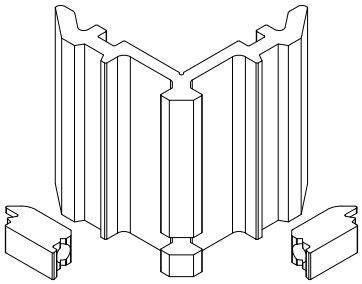	**ACVG610S** **Mechanical Corner Cleat** **Block: ACMX853**	**24**	**Pack**	**VG610**	MF	
					SA	
					KL	
					HP	
					SSC	
					SMC	
					W	
					Z	
					PC	

T-BARS
ACVG65=2.5mm
ACVG66=3.0mm
ACVL150=4.0mm

Screw (Grub)

MF = Mill Finish
SA = Silver Anodised
KL = Basic Colour
HP = Special Colour
SSC = Smooth Satin Chrome
SMC = Smokey Chrome
PC = Polished Chrome
W = White
Z = Black

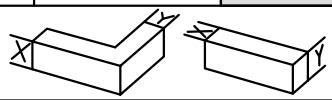

Visoglide Plus

ACCESSORIES : PHOTOS & DRAWINGS

Image	Part Code	Pack	Unit	Application	Colour
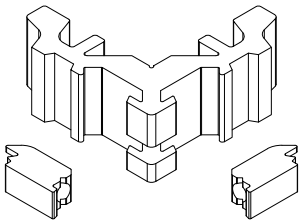	**ACVG617S** **Mechanical Corner Cleat** **Block: ACMX853**	**24**	**Pack**	**VG610**	MF SA KL HP SSC SMC W Z PC
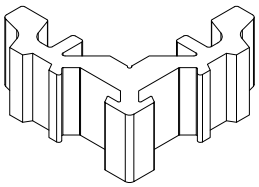	**ACVG618X** **Crimp Corner Cleat**	**24**	**Pack**	**VG618**	MF SA KL HP SSC SMC W Z PC
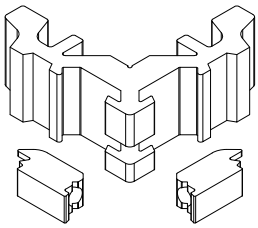	**ACVG618S** **Mechanical Corner Cleat** **Block: ACMX853**	**24**	**Pack**	**VG618**	MF SA KL HP SSC SMC W Z PC
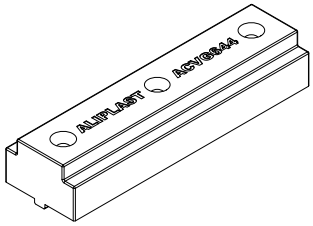	**ACVG644** **Vent Support**	**10**	**Pack**	**VG521N** **VG921**	MF SA KL HP SSC SMC W Z PC
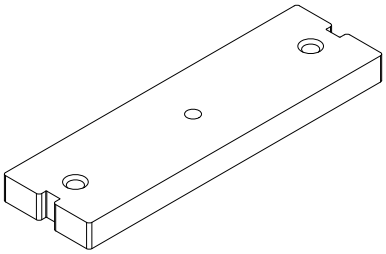	**ACVG645N** **Vent Support** **Add-on For ACVG644**	**2**	**Pack**	**VG521N** **VG921**	MF SA KL HP SSC SMC W Z PC

T-BARS
ACVG65=2.5mm
ACVG66=3.0mm
ACVL150=4.0mm

Screw (Grub)

MF = Mill Finish
SA = Silver Anodised
KL = Basic Colour
HP = Special Colour
SSC = Smooth Satin Chrome
SMC = Smokey Chrome
PC = Polished Chrome
W = White
Z = Black

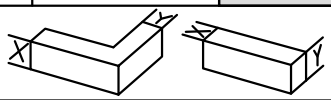

ISSUE: JANUARY 2026

Image	Part Code	Pack	Unit	Application	Colour	
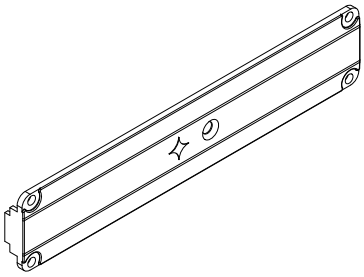	**ACVG646** **Gearbox Cover**	**1**	**each**	**ACVG649**	MF	
					SA	
					KL	
					HP	
					SSC	
					SMC	
					W	
					Z	✓
					PC	
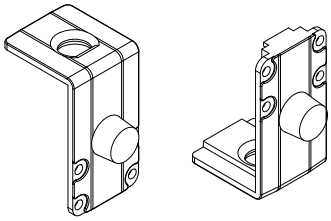	**ACVG647** **Shootbolt Guide**	**2**	**pack**	**ACDV228** **ACVG5328** **ACVG650**	MF	
					SA	
					KL	
					HP	
					SSC	
					SMC	
					W	
					Z	✓
					PC	
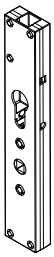	**ACVG649** **Shootbolt Gearbox**	**1**	**pack**	**ACDV228** **ACVG5328** **ACVG646**	MF	
					SA	
					KL	
					HP	
					SSC	
					SMC	
					W	
					Z	
					PC	
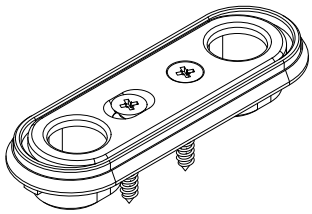	**ACVG655** **Shootbolt Keep** **Fixings Included**	**2**	**pack**	**ACDV228** **ACVG5328**	MF	
					SA	
					KL	
					HP	
					SSC	
					SMC	
					W	
					Z	
					PC	
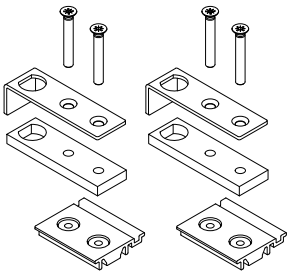	**ACVG656** **PAS24 Corner Guide Kit** **Fixings Included**	**1**	**kit**	**ACVG657** **ACVG5328**	MF	
					SA	
					KL	
					HP	
					SSC	
					SMC	
					W	
					Z	
					PC	

T-BARS
ACVG65=2.5mm
ACVG66=3.0mm
ACVL150=4.0mm

Screw (Grub)

MF = Mill Finish
SA = Silver Anodised
KL = Basic Colour
HP = Special Colour
SSC = Smooth Satin Chrome
SMC = Smokey Chrome
PC = Polished Chrome
W = White
Z = Black

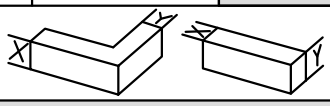

Image	Part Code	Pack	Unit	Application	Colour
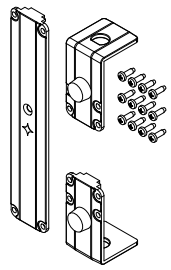	**ACVG657** **PAS24 Guide and Cover Kit** **Fixings Included**	**1**	**kit**	**ACVG656** **ACVG5328**	MF SA KL HP SSC SMC W Z PC
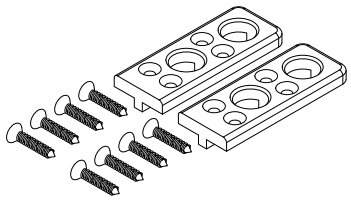	**ACVG658** **PAS24 Shootbolt Keep** **Fixings Included**	**1**	**kit**	**ACVG656** **ACVG5328**	MF SA KL HP SSC SMC W Z PC
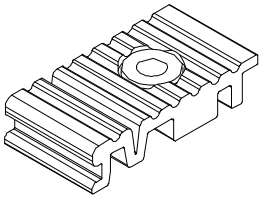	**ACVG740** **VG521N Fixings**	**20**	**Pack**	**VG521N** **VG921** **VG542**	MF SA KL HP SSC SMC W Z PC
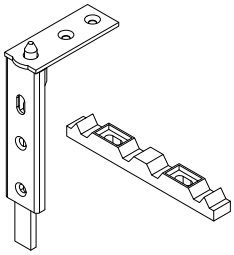	**ACVG752** **Corner Shootbolt**	**2**	**Pack**	**ACSZ007** **ACSZ008** **ACSZ009** **ACSZ024** **ACSZ025** **ACSZ026** **VG520** **VG920**	MF SA KL HP SSC SMC W Z PC
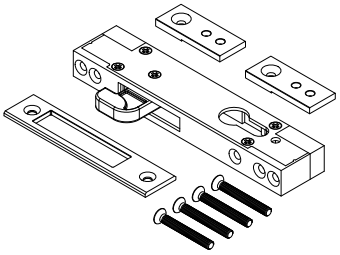	**ACVG873** **Hook Lock & Keep**	**1**	**each**	**VG520**	MF SA KL HP SSC SMC W Z PC

T-BARS
ACVG65=2.5mm
ACVG66=3.0mm
ACVL150=4.0mm

Screw (Grub)

MF = Mill Finish
SA = Silver Anodised
KL = Basic Colour
HP = Special Colour
SSC = Smooth Satin Chrome
SMC = Smokey Chrome
PC = Polished Chrome
W = White
Z = Black

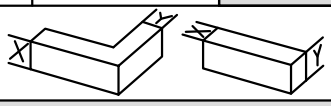

Image	Part Code	Pack	Unit	Application	Colour
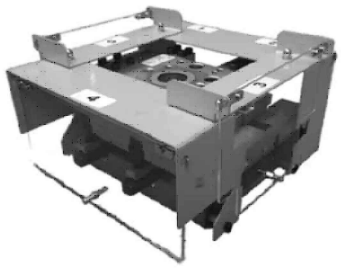	**ACVG900** **Punch Unit**	1	each		MF SA KL HP SSC SMC W Z PC
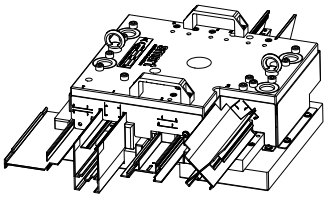	**ACVG905N** **Punch Tool** **(Modified ACSG160A tools may also be used)**	1	each		MF SA KL HP SSC SMC W Z PC
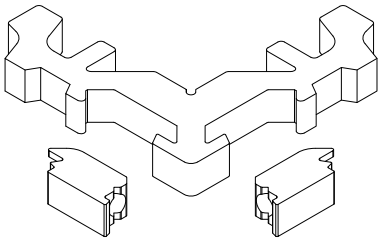	**ACVG920** **Mechanical Corner Cleat**	24	Pack	VG920	MF SA KL HP SSC SMC W Z PC
	**ACVG951** **Drill Jig Drainage**	1	each	VG510	MF SA KL HP SSC SMC W Z PC
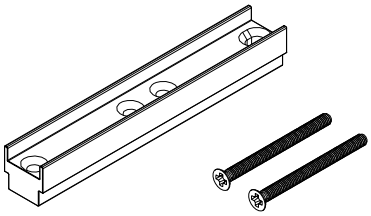	**ACVG1282N** **Roller Support Block**	10	Pack	VG521N VG921 VG516	MF SA KL HP SSC SMC W Z PC

T-BARS
ACVG65=2.5mm
ACVG66=3.0mm
ACVL150=4.0mm

Screw (Grub)

MF = Mill Finish
SA = Silver Anodised
KL = Basic Colour
HP = Special Colour
SSC = Smooth Satin Chrome
SMC = Smokey Chrome
PC = Polished Chrome
W = White
Z = Black

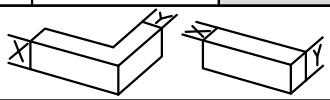

Image	Part Code	Pack	Unit	Application	Colour	
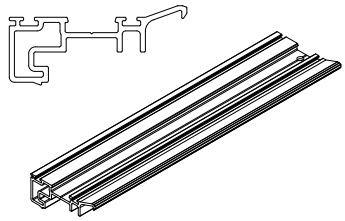	**ACVG1597N** **VG921 Interlock Security Device**	**10**	**pack**	**VG921**	MF	
					SA	
					KL	
					HP	
					SSC	
					SMC	
					W	
					Z	✓
					PC	
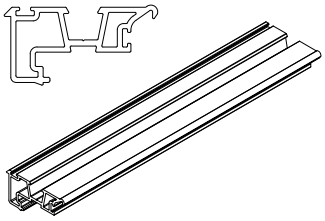	**ACVG1598N** **VG920 Interlock Security Device**	**10**	**pack**	**VG920**	MF	
					SA	
					KL	
					HP	
					SSC	
					SMC	
					W	
					Z	✓
					PC	
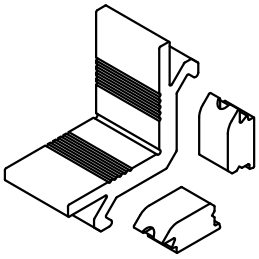	**ACVG5010** **Mechanical Cleat**	**24**	**pack**	**VG5010** **VG5011** **VG5012** **VG5013**	MF	✓
					SA	
					KL	
					HP	
					SSC	
					SMC	
					W	
					Z	
					PC	
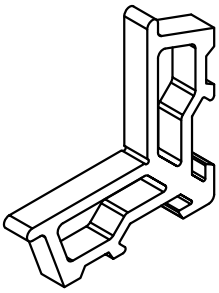	**ACVG5023** **Crimping Cleat** **Pneumatic Crimp Only**	**24**	**pack**	**VG5023** **VG5024**	MF	✓
					SA	
					KL	
					HP	
					SSC	
					SMC	
					W	
					Z	
					PC	
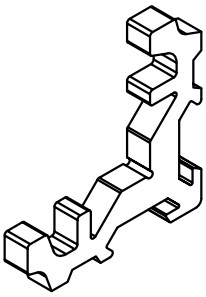	**ACVG5024** **Crimping Cleat** **Pneumatic Crimp Only**	**24**	**pack**	**VG5024**	MF	✓
					SA	
					KL	
					HP	
					SSC	
					SMC	
					W	
					Z	
					PC	

T-BARS
ACVG65=2.5mm
ACVG66=3.0mm
ACVL150=4.0mm

Screw (Grub)

MF = Mill Finish
SA = Silver Anodised
KL = Basic Colour
HP = Special Colour
SSC = Smooth Satin Chrome
SMC = Smokey Chrome
PC = Polished Chrome
W = White
Z = Black

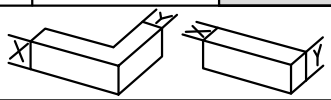

Image	Part Code	Pack	Unit	Application	Colour	
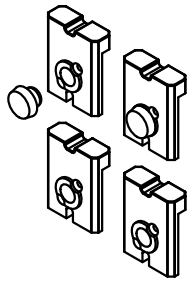	**ACVG5029** **Anti-Lift & Buffer**	**1**	**Kit**	**VG920**	MF	
					SA	
					KL	
					HP	
					SSC	
					SMC	
					W	
					Z	✓
					PC	
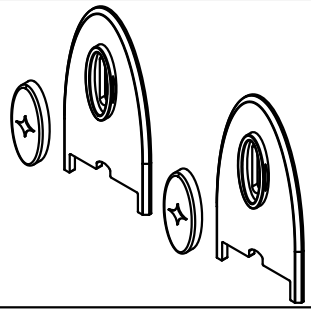	**ACVG5030** **Interlock Cover Caps**	**1**	**Kit**	**VG530**	MF	
					SA	
					KL	
					HP	
					SSC	
					SMC	
					W	
					Z	✓
					PC	
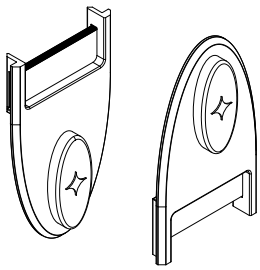	**ACVG5031** **Interlock Cover Caps**	**1**	**Kit**		MF	
					SA	
					KL	
					HP	
					SSC	
					SMC	
					W	
					Z	✓
					PC	
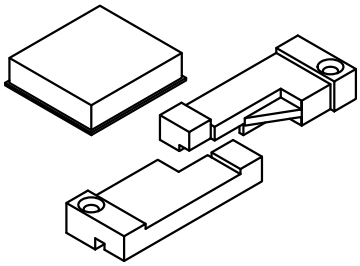	**ACVG5032** **Interlock Plug** **35mm Interlocks**	**2**	**Kit**	**VG5010** **VG5011** **VG5012** **VG5013**	MF	
					SA	
					KL	
					HP	
					SSC	
					SMC	
					W	
					Z	✓
					PC	
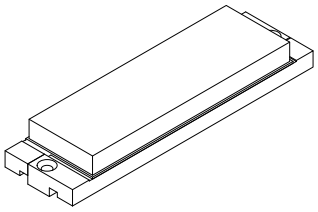	**ACVG5034** **Interlock Plug** **Standard Interlocks**	**2**	**Kit**	**VG5010** **VG5011** **VG5012** **VG5013**	MF	
					SA	
					KL	
					HP	
					SSC	
					SMC	
					W	
					Z	✓
					PC	

T-BARS
ACVG65=2.5mm
ACVG66=3.0mm
ACVL150=4.0mm

Screw (Grub)

MF = Mill Finish
SA = Silver Anodised
KL = Basic Colour
HP = Special Colour
SSC = Smooth Satin Chrome
SMC = Smokey Chrome
PC = Polished Chrome
W = White
Z = Black

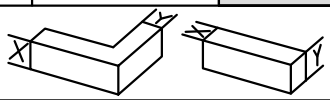

Image	Part Code	Pack	Unit	Application	Colour	
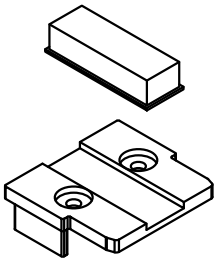	**ACVG5040** **Meeting Stile End Cap with Brush Pile**	**2**	**Pack**	**VG5040** **VG5042**	MF SA KL HP SSC SMC W Z PC	
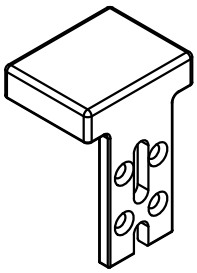	**ACVG5046** **Sash Anti-Lift Block**	**4**	**Pack**	**VG520** **VG521N** **VG920** **VG920G** **VG921**	MF SA KL HP SSC SMC W Z PC	 ✓
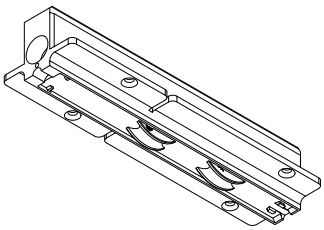	**ACVG5055** **Adjustable Roller**	**1**	**each**	**VG520** **VG920** **VG53** **VG53A**	MF SA KL HP SSC SMC W Z PC	 ✓
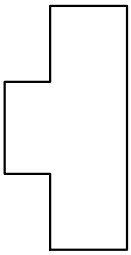	**ACVG5072** **Insulating Infill**	**20**	**m**	**VG920**	MF SA KL HP SSC SMC W Z PC	 ✓
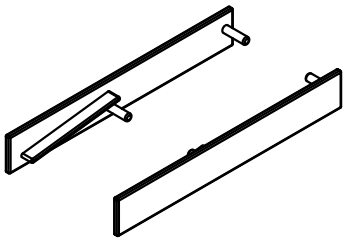	**ACVG5077** **VG5077 End Caps**	**10**	**Pairs**	**VG5077**	MF SA KL HP SSC SMC W Z PC	 ✓

T-BARS
ACVG65=2.5mm
ACVG66=3.0mm
ACVL150=4.0mm

Screw (Grub)

MF = Mill Finish
SA = Silver Anodised
KL = Basic Colour
HP = Special Colour
SSC = Smooth Satin Chrome
SMC = Smokey Chrome
PC = Polished Chrome
W = White
Z = Black

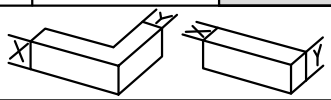

Image	Part Code	Pack	Unit	Application	Colour	
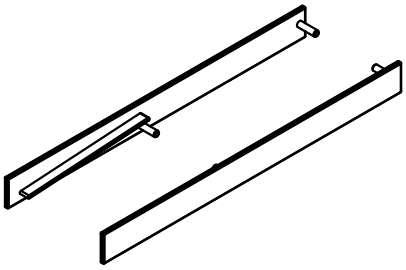	**ACVG5079** **VG5079 End Caps**	**10**	**Pairs**	**VG5079**	MF	
					SA	
					KL	
					HP	
					SSC	
					SMC	
					W	
					Z	✓
					PC	
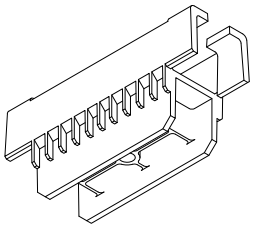	**ACVG5268** **Grove Support Brace**	**1**	**Each**		MF	
					SA	
					KL	
					HP	
					SSC	
					SMC	
					W	
					Z	
					PC	
	**ACVG5276** **Drive Gear with 2 Hooks** **Sash Height: 1790-2265mm**	**1**	**Each**		MF	
					SA	
					KL	
					HP	
					SSC	
					SMC	
					W	
					Z	
					PC	
	**ACVG5277** **Drive Gear with 3 Hooks** **Sash Height: 2266-2622mm**	**1**	**Each**		MF	
					SA	
					KL	
					HP	
					SSC	
					SMC	
					W	
					Z	
					PC	
	**ACVG5278** **Drive Gear with 3 Hooks** **Sash Height: 2623-3000mm**	**1**	**Each**		MF	
					SA	
					KL	
					HP	
					SSC	
					SMC	
					W	
					Z	
					PC	

T-BARS
ACVG65=2.5mm
ACVG66=3.0mm
ACVL150=4.0mm

Screw (Grub)

MF = Mill Finish
SA = Silver Anodised
KL = Basic Colour
HP = Special Colour
SSC = Smooth Satin Chrome
SMC = Smokey Chrome
PC = Polished Chrome
W = White
Z = Black

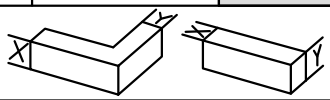

Image	Part Code	Pack	Unit	Application	Colour
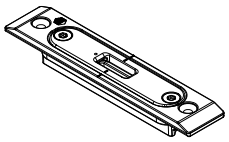	**ACVG5284** **Keep**	1	Each		MF SA KL HP SSC SMC W Z PC
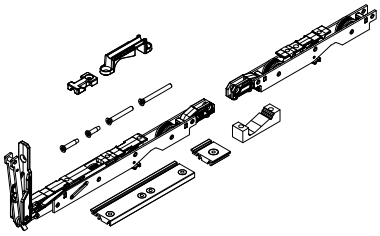	**ACVG5285** **Basic Lift & Slide Kit** **<200KG**	1	each	VG521N VG921	MF SA KL HP SSC SMC W Z PC
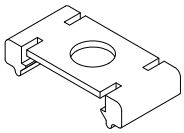	**ACVG5286** **22mm Roller Support**	1	Each		MF SA KL HP SSC SMC W Z PC
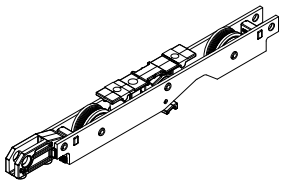	**ACVG5287** **Intermediate Roller**	1	Each		MF SA KL HP SSC SMC W Z PC
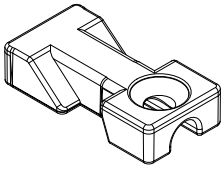	**ACVG5288** **Double Door Keep**	1	Each		MF SA KL HP SSC SMC W Z PC

T-BARS
ACVG65=2.5mm
ACVG66=3.0mm
ACVL150=4.0mm

Screw (Grub)

MF = Mill Finish
SA = Silver Anodised
KL = Basic Colour
HP = Special Colour
SSC = Smooth Satin Chrome
SMC = Smokey Chrome
PC = Polished Chrome
W = White
Z = Black

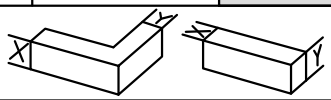

Image	Part Code	Pack	Unit	Application	Colour
	**ACVG5289** **Double Door Drive Gear**	**1**	**Each**		MF SA KL HP SSC SMC W Z PC
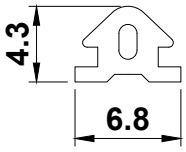	**ACVS010** **PVC Insert**	**1**	**each**	**VG652** **VG655** **VG654**	MF SA KL HP SSC SMC W Z PC
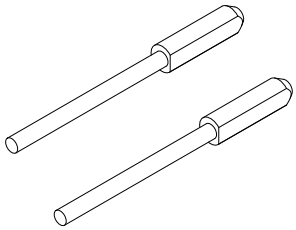	**ACVG5328** **Stainless Steel Shootbolt Locking Rods** **Lengths:** **1 x 1267mm & 1 x 1400mm**	**1**	**Each**		MF SA KL HP SSC SMC W Z PC
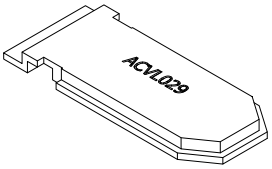	**ACVL029** **Strengthening Piece For T-Connection**	**1** **2500** **5000**	**each** **Pack** **Pack**	**VG620** **VG621**	MF SA KL HP SSC SMC W Z PC
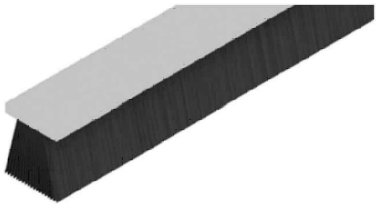	**ACVL033** **Woolpile** **H = 8mm**	**50**	**m**		MF SA KL HP SSC SMC W Z PC

T-BARS
ACVG65=2.5mm
ACVG66=3.0mm
ACVL150=4.0mm

Screw (Grub)

MF = Mill Finish
SA = Silver Anodised
KL = Basic Colour
HP = Special Colour
SSC = Smooth Satin Chrome
SMC = Smokey Chrome
PC = Polished Chrome
W = White
Z = Black

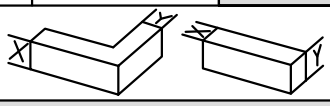

Image	Part Code	Pack	Unit	Application	Colour	
	**ACVL058** **Clip**	**50**	**Pack**	**VL70**	MF	
					SA	
					KL	
					HP	
					SSC	
					SMC	
					W	
					Z	
					PC	
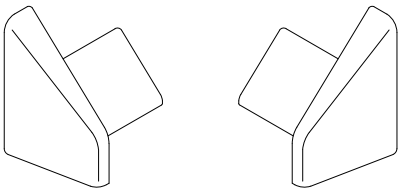	**ACVL059** **End Cap for VL72**	**1**	**Pair**	**VL72**	MF	
					SA	
					KL	
					HP	
					SSC	
					SMC	
					W	✓
					Z	✓
					PC	
	**ACVL061** **Rivet For VL72**	**100**	**Pack**		MF	
					SA	
					KL	
					HP	
					SSC	
					SMC	
					W	
					Z	
					PC	
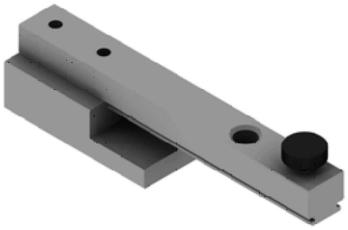	**ACVL162** **Drill Jig T-Connection**	**1**	**each**	**VG510** **VG515** **ACVG515N**	MF	
					SA	
					KL	
					HP	
					SSC	
					SMC	
					W	
					Z	
					PC	
	**ACVL167** **Punch Tool**	**1**	**each**	**VG610**	MF	
					SA	
					KL	
					HP	
					SSC	
					SMC	
					W	
					Z	
					PC	

T-BARS
ACVG65=2.5mm
ACVG66=3.0mm
ACVL150=4.0mm

Screw (Grub)

MF = Mill Finish
SA = Silver Anodised
KL = Basic Colour
HP = Special Colour
SSC = Smooth Satin Chrome
SMC = Smokey Chrome
PC = Polished Chrome
W = White
Z = Black

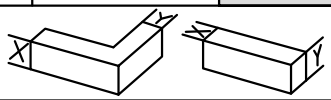

Image	Part Code	Pack	Unit	Application	Colour
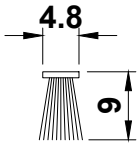	**ACVS033** Woolpile With Fin Black or White H = 9mm W = 4.8mm	150	m	VG520 VG521N	MF SA KL HP SSC SMC W ✓ Z ✓ PC
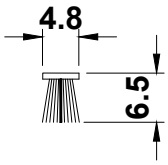	**ACVS034** Woolpile With Fin Black or White H = 6.5mm W = 4.8mm	150	m	VG551R	MF SA KL HP SSC SMC W ✓ Z ✓ PC
					MF SA KL HP SSC SMC W Z PC
					MF SA KL HP SSC SMC W Z PC
					MF SA KL HP SSC SMC W Z PC

T-BARS
ACVG65=2.5mm
ACVG66=3.0mm
ACVL150=4.0mm

Screw (Grub)

MF = Mill Finish
SA = Silver Anodised
KL = Basic Colour
HP = Special Colour
SSC = Smooth Satin Chrome
SMC = Smokey Chrome
PC = Polished Chrome
W = White
Z = Black

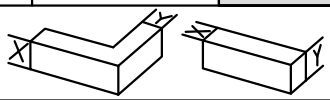

Visoglide Plus

STANDARD ACCESSORIES

Image	Part Code	Pack	Unit	Application	Colour
	**ACMX09700** **Alu-Polish** **Cleaning emulsion for aluminium oxide.**	**1**	**each**		MF ✓ SA KL HP SSC SMC W Z PC
	**ACMX09761** **Maxi Gloss** **Protection for painted and anodised surfaces.**	**1**	**each**		MF SA KL HP SSC SMC W Z PC
	**ACMX09762** **Alu. Bright** **Cleaner for rough, anodised or enamelled aluminium frames.**	**1**	**each**		MF SA KL HP SSC SMC W Z PC
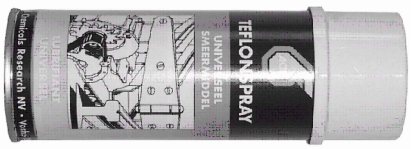	**ACMX09763** **Teflon Spray** **Lubricant**	**1**	**each**		MF SA KL HP SSC SMC W Z PC
	**ACMX09764** **Maxi Cleaner** **For cleaning oily surfaces.**	**1**	**each**		MF SA KL HP SSC SMC W Z PC

T-BARS
ACVG65=2.5mm
ACVG66=3.0mm
ACVL150=4.0mm

Screw (Grub)

MF = Mill Finish
SA = Silver Anodised
KL = Basic Colour
HP = Special Colour
SSC = Smooth Satin Chrome
SMC = Smokey Chrome
PC = Polished Chrome
W = White
Z = Black

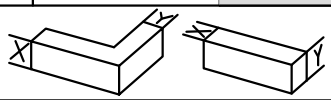

ISSUE: JANUARY 2026

STANDARD ACCESSORIES

Image	Part Code	Pack	Unit	Application	Colour
	**ACMX09765** **Glue Cleaner** **De-grease and silicone remover.**	1	each		MF SA KL HP SSC SMC W Z PC
	**ACMX09770** **Roll & Wrap 100mm**	1	each		MF SA KL HP SSC SMC W Z PC
	**ACMX09775** **Grip Handwrap**	1	each		MF SA KL HP SSC SMC W Z PC
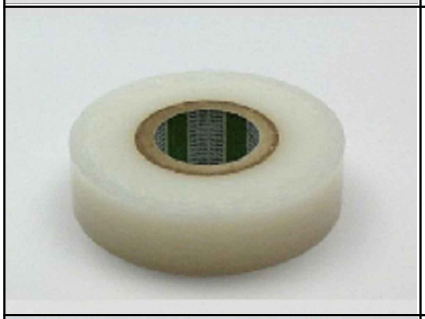	**ACMX09801** **Protective Tape 50mm**	1	each		MF SA KL HP SSC SMC W Z PC
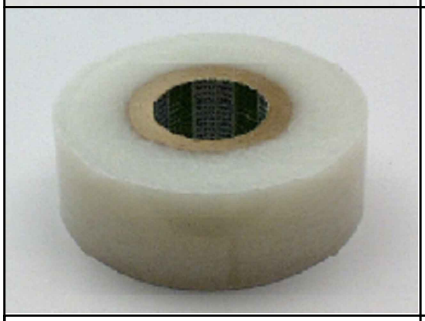	**ACMX09802** **Protective Tape 70mm**	1	each		MF SA KL HP SSC SMC W Z PC

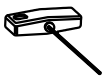

T-BARS
ACVG65=2.5mm
ACVG66=3.0mm
ACVL150=4.0mm

Screw (Grub)

MF = Mill Finish
SA = Silver Anodised
KL = Basic Colour
HP = Special Colour
SSC = Smooth Satin Chrome
SMC = Smokey Chrome
PC = Polished Chrome
W = White
Z = Black

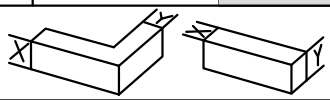

Image	Part Code	Pack	Unit	Application	Colour	
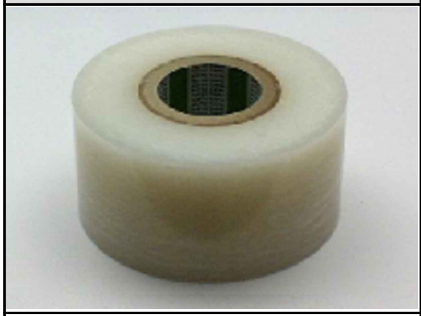	**ACMX09803** **Protective Tape 100mm**	**1**	**each**		MF	
					SA	
					KL	
					HP	
					SSC	
					SMC	
					W	
					Z	
					PC	
	**ACSIL05** **Rubber Sealant**	**1**	**each**		MF	
					SA	
					KL	
					HP	
					SSC	
					SMC	
					W	
					Z	
					PC	
	**ACSIL04** **Sealing Glue** **Order with suffix of KL colour (eg.ACSIL04KL005) or BL=Black/WP=White/ CL=Clear**	**1**	**each**		MF	
					SA	
					KL	✓
					HP	
					SSC	
					SMC	
					W	✓
					Z	✓
					PC	
	**ACSIL08** **Silicon Gun**	**1**	**each**		MF	
					SA	
					KL	
					HP	
					SSC	
					SMC	
					W	
					Z	
					PC	
	**ACSIL013** **Glue for Mitre**	**1**	**each**		MF	
					SA	
					KL	
					HP	
					SSC	
					SMC	
					W	
					Z	
					PC	

T-BARS
ACVG65=2.5mm
ACVG66=3.0mm
ACVL150=4.0mm

Screw (Grub)

MF = Mill Finish
SA = Silver Anodised
KL = Basic Colour
HP = Special Colour
SSC = Smooth Satin Chrome
SMC = Smokey Chrome
PC = Polished Chrome
W = White
Z = Black

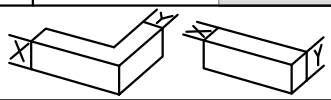

Image	Part Code	Pack	Unit	Application	Colour
	**ACSIL014** **Anti-Corrosion Coating**	1	each		MF ✓ SA KL HP SSC SMC W Z PC
	**ACUN3900** **Gasket Roller**	1	Each	Wedge Gaskets	MF SA KL HP SSC SMC W Z PC
	**ACVL158** **Spray Oil**	1	each		MF SA KL HP SSC SMC W Z PC
					MF SA KL HP SSC SMC W Z PC
					MF SA KL HP SSC SMC W Z PC

T-BARS
ACVG65=2.5mm
ACVG66=3.0mm
ACVL150=4.0mm

Screw (Grub)

MF = Mill Finish
SA = Silver Anodised
KL = Basic Colour
HP = Special Colour
SSC = Smooth Satin Chrome
SMC = Smokey Chrome
PC = Polished Chrome
W = White
Z = Black

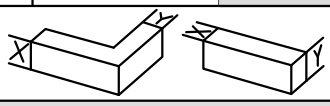

Visoglide Plus

STANDARD ACCESSORIES

Image	Part Code	Pack	Unit	Application	Colour
					MF SA KL HP SSC SMC W Z PC
					MF SA KL HP SSC SMC W Z PC
					MF SA KL HP SSC SMC W Z PC
					MF SA KL HP SSC SMC W Z PC
					MF SA KL HP SSC SMC W Z PC

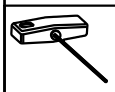

T-BARS
ACVG65=2.5mm
ACVG66=3.0mm
ACVL150=4.0mm

Screw (Grub)

MF	**= Mill Finish**	**W**	**= White**
SA	**= Silver Anodised**	**Z**	**= Black**
KL	**= Basic Colour**		
HP	**= Special Colour**		
SSC	**= Smooth Satin Chrome**		
SMC	**= Smokey Chrome**		
PC	**= Polished Chrome**		

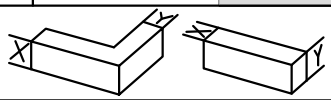

Section C

Sections

Scale Elevations

Section C

Visoglide Plus

Scale Elevations

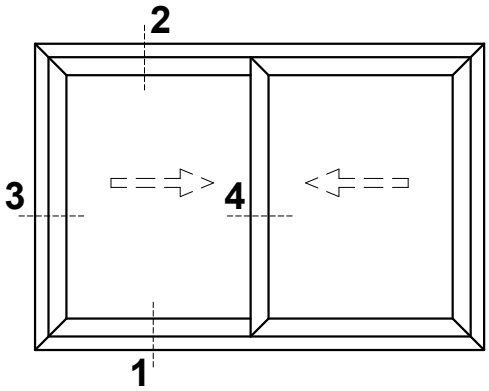

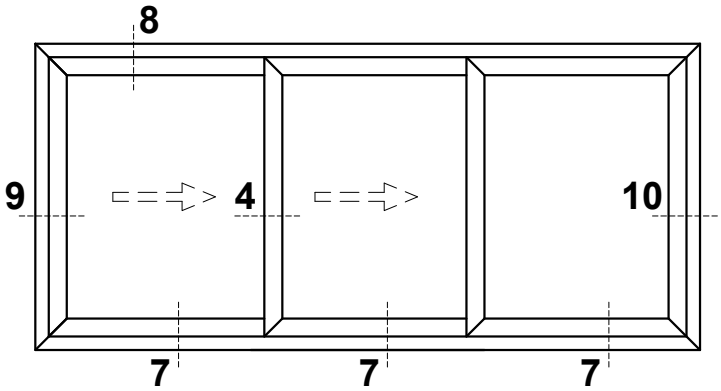

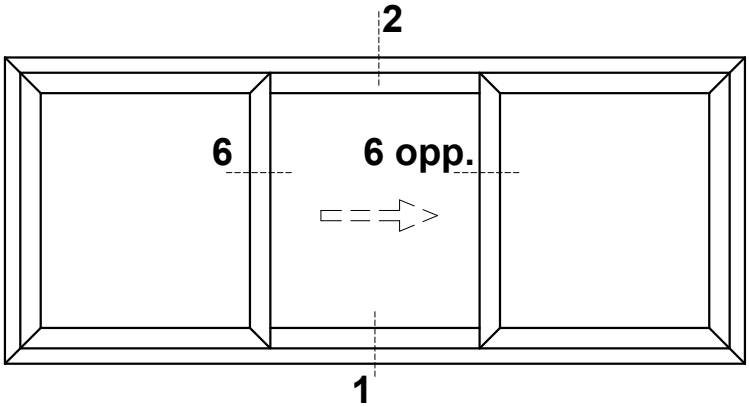

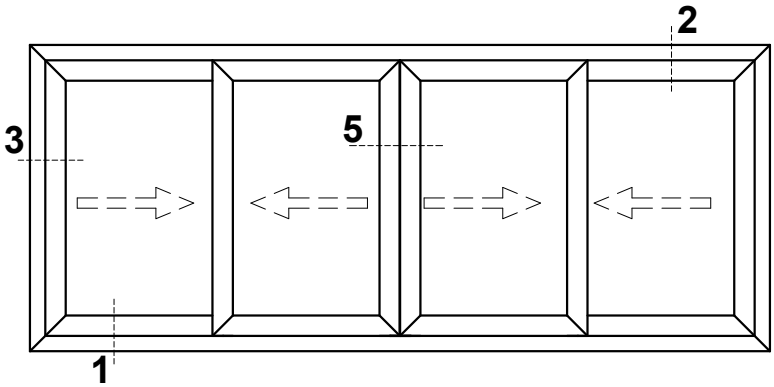

Do Not Scale From This Drawing

Detail 1A

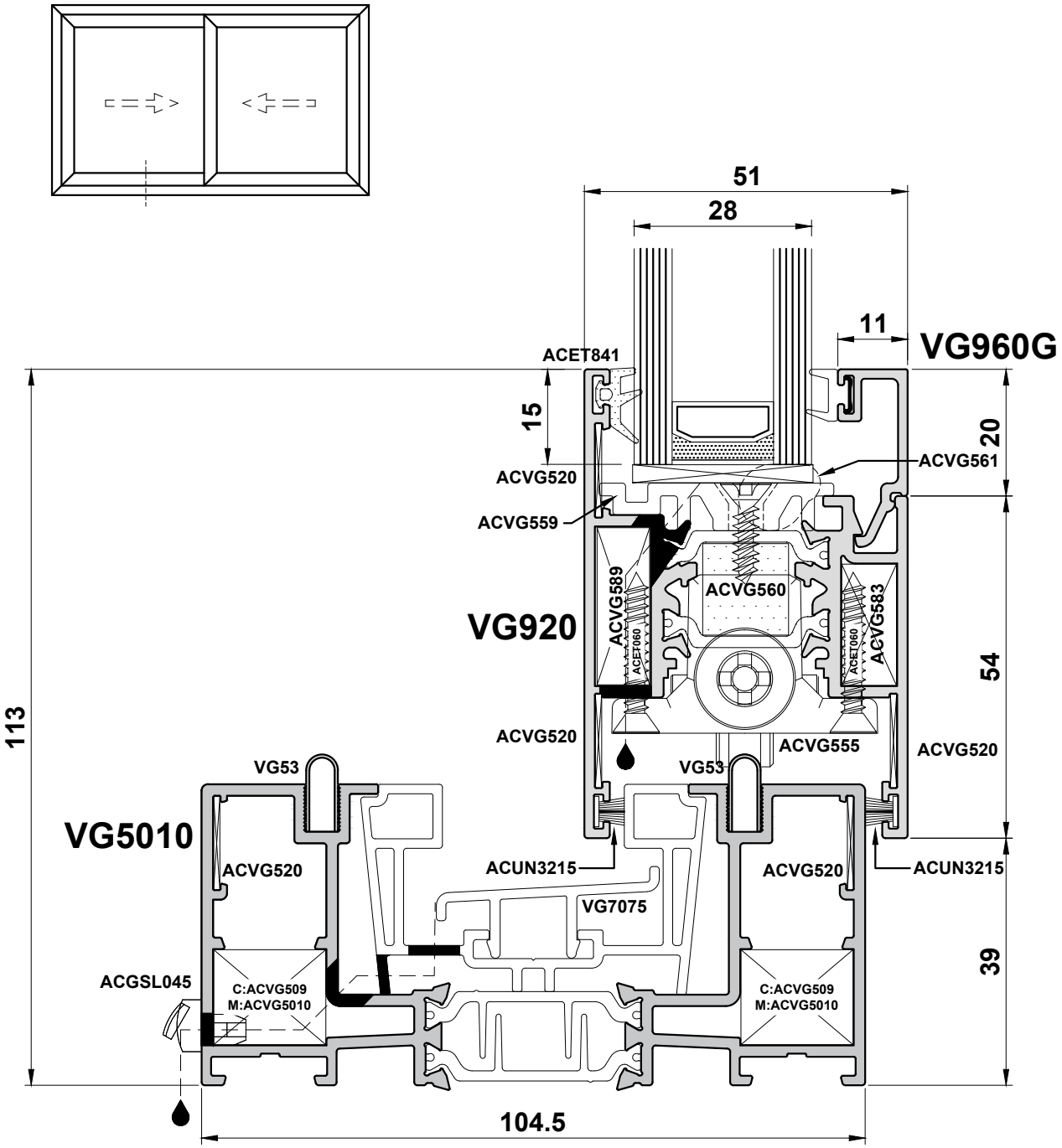

Do Not Scale From This Drawing

Detail 1B

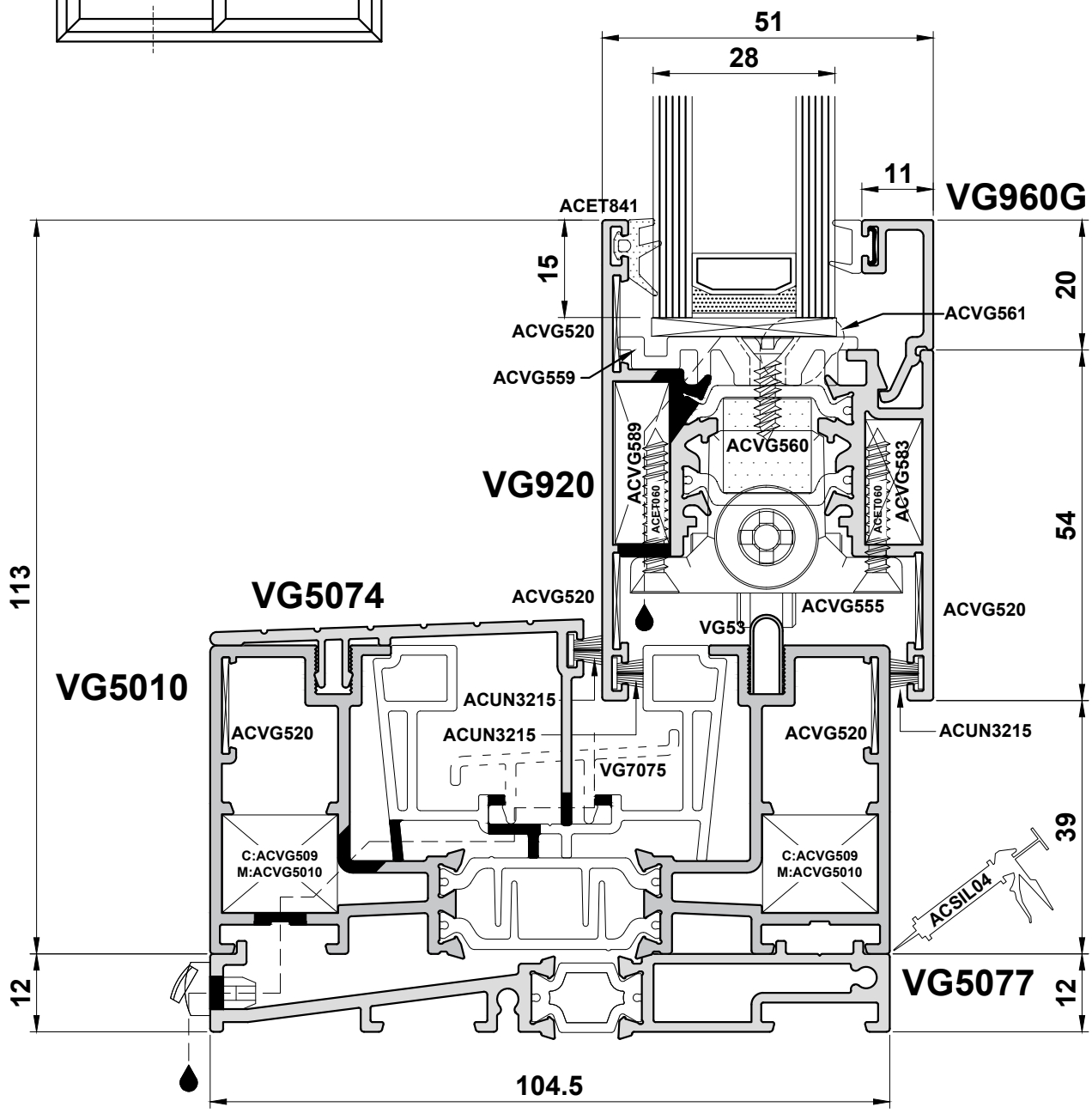

Do Not Scale From This Drawing

Detail 1C

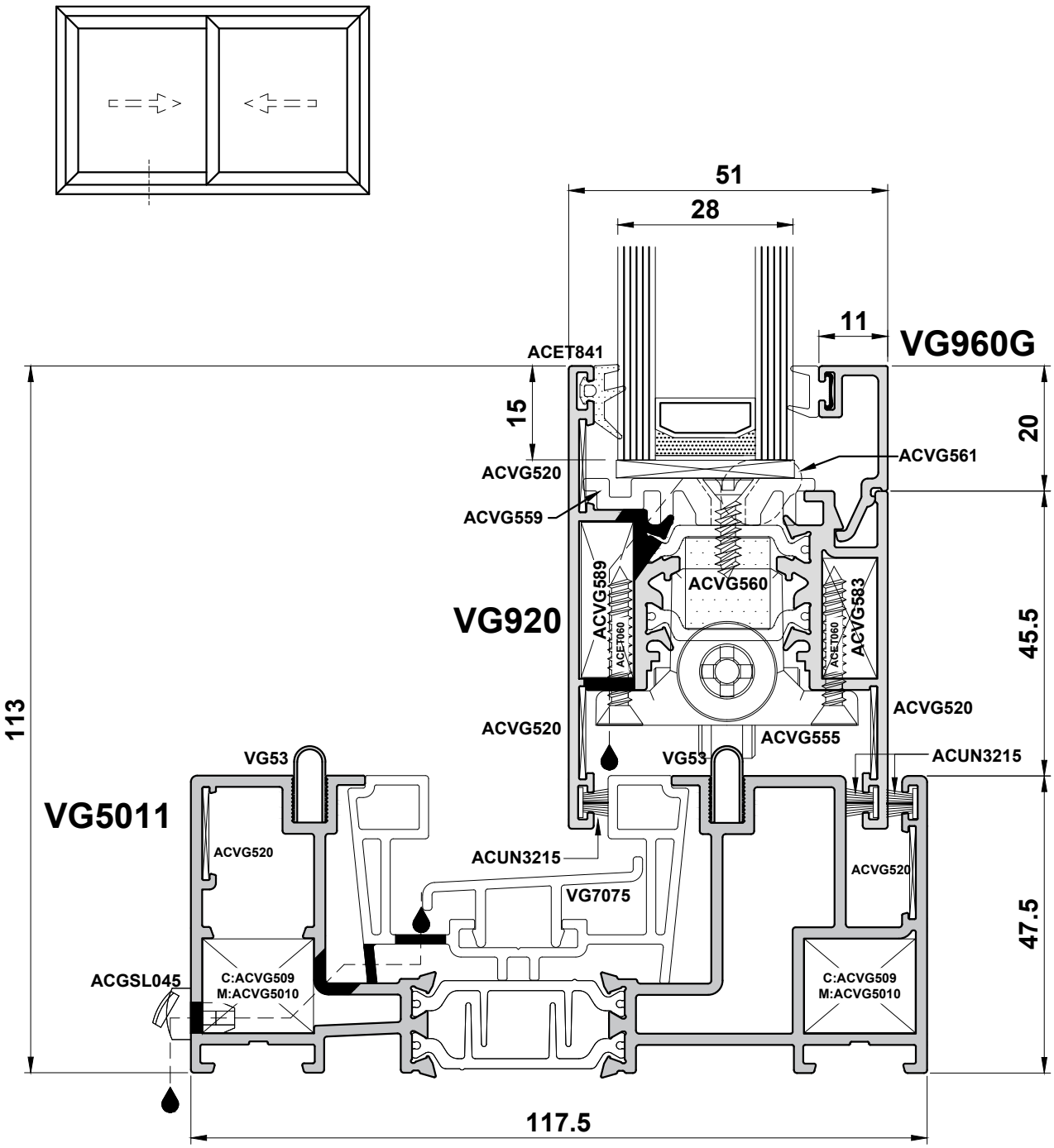

Do Not Scale From This Drawing

Detail 1D

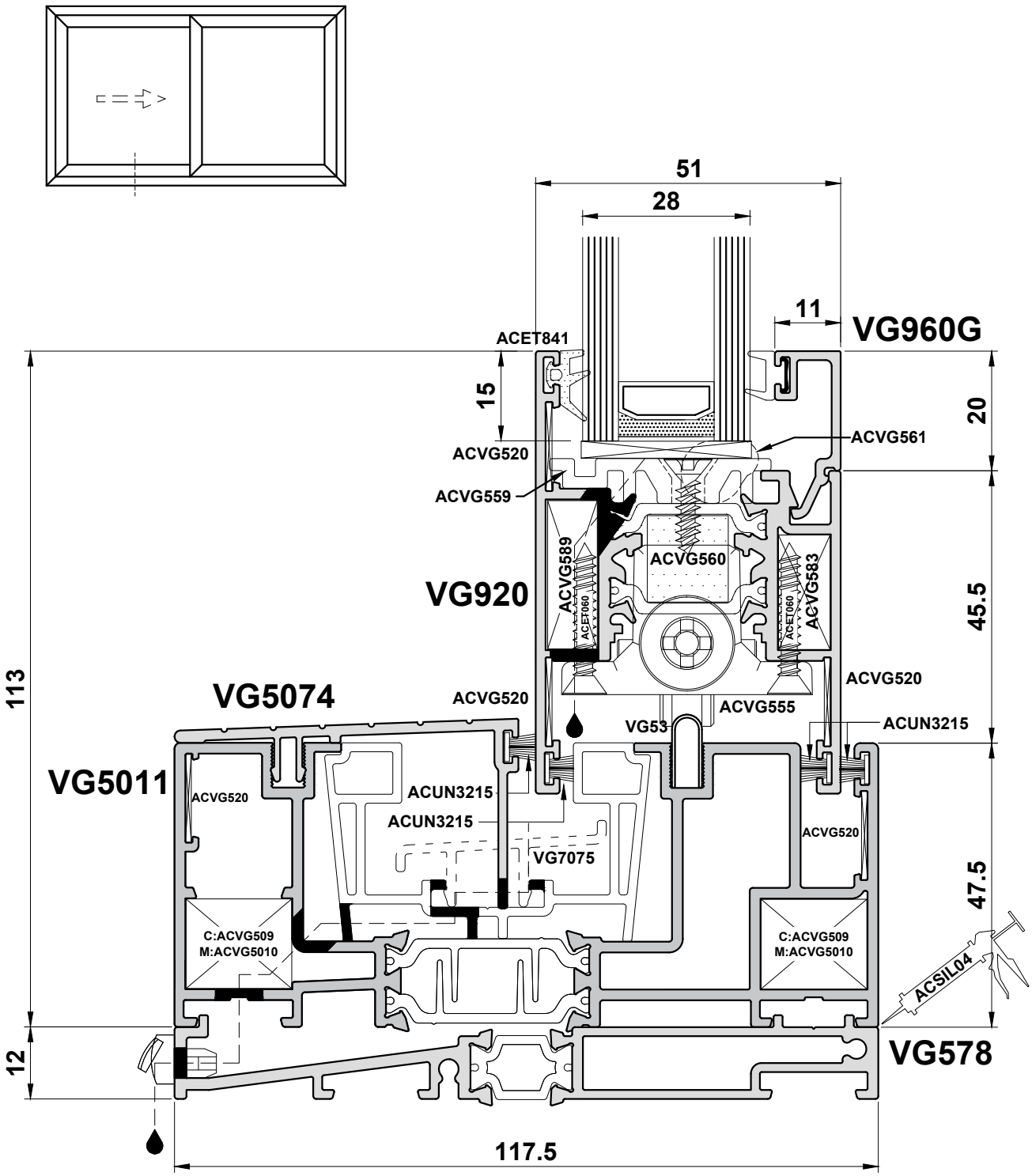

Do Not Scale From This Drawing

Detail 1E

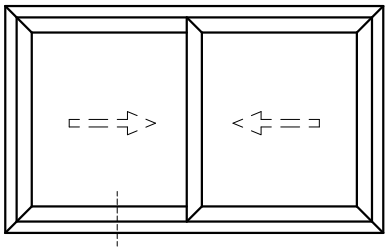

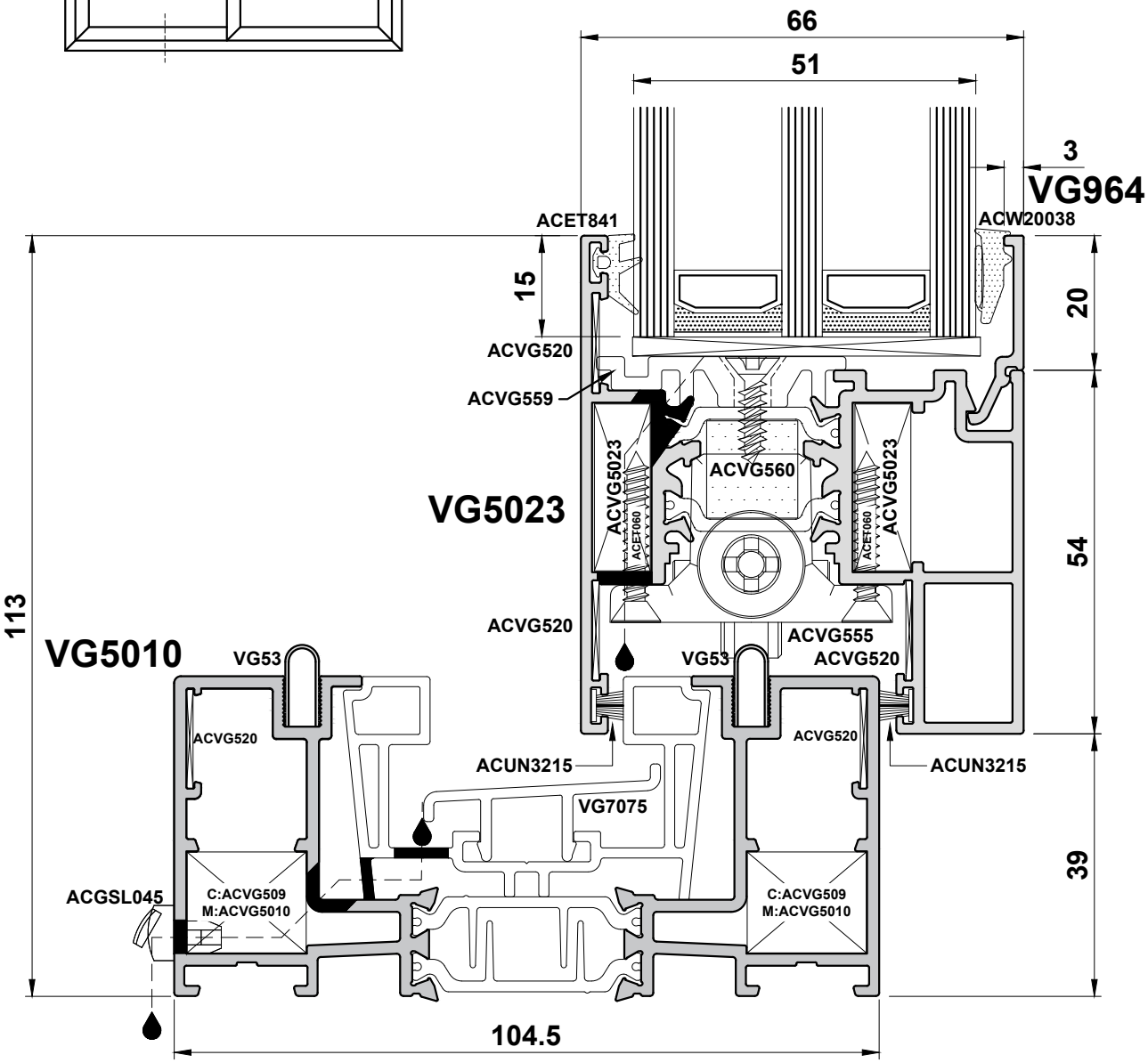

Do Not Scale From This Drawing

Detail 1F

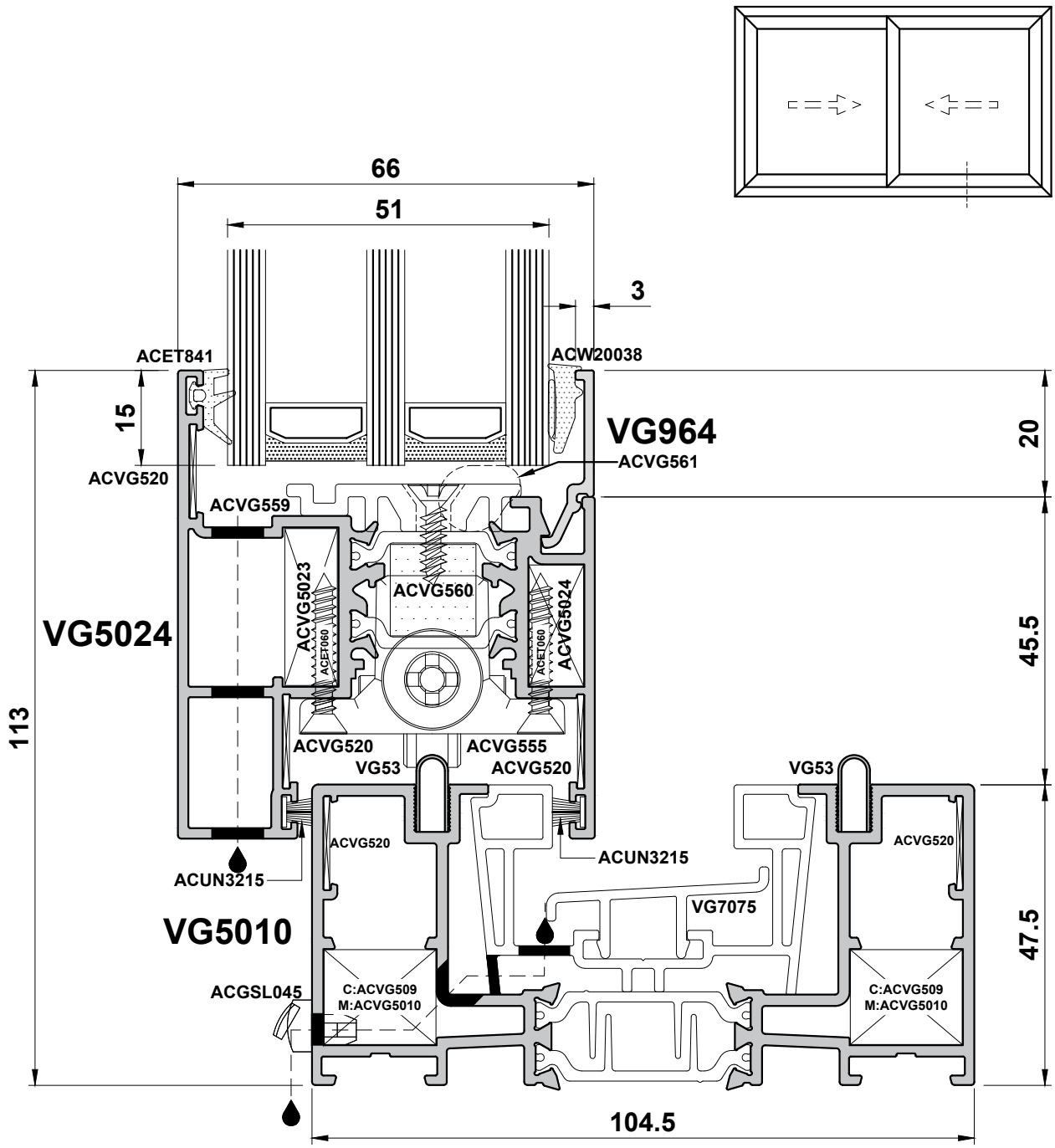

Do Not Scale From This Drawing

Detail 1G HYB

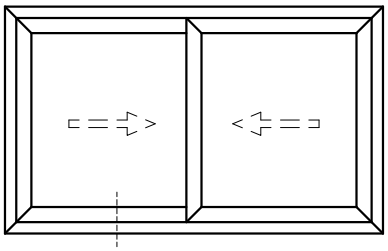

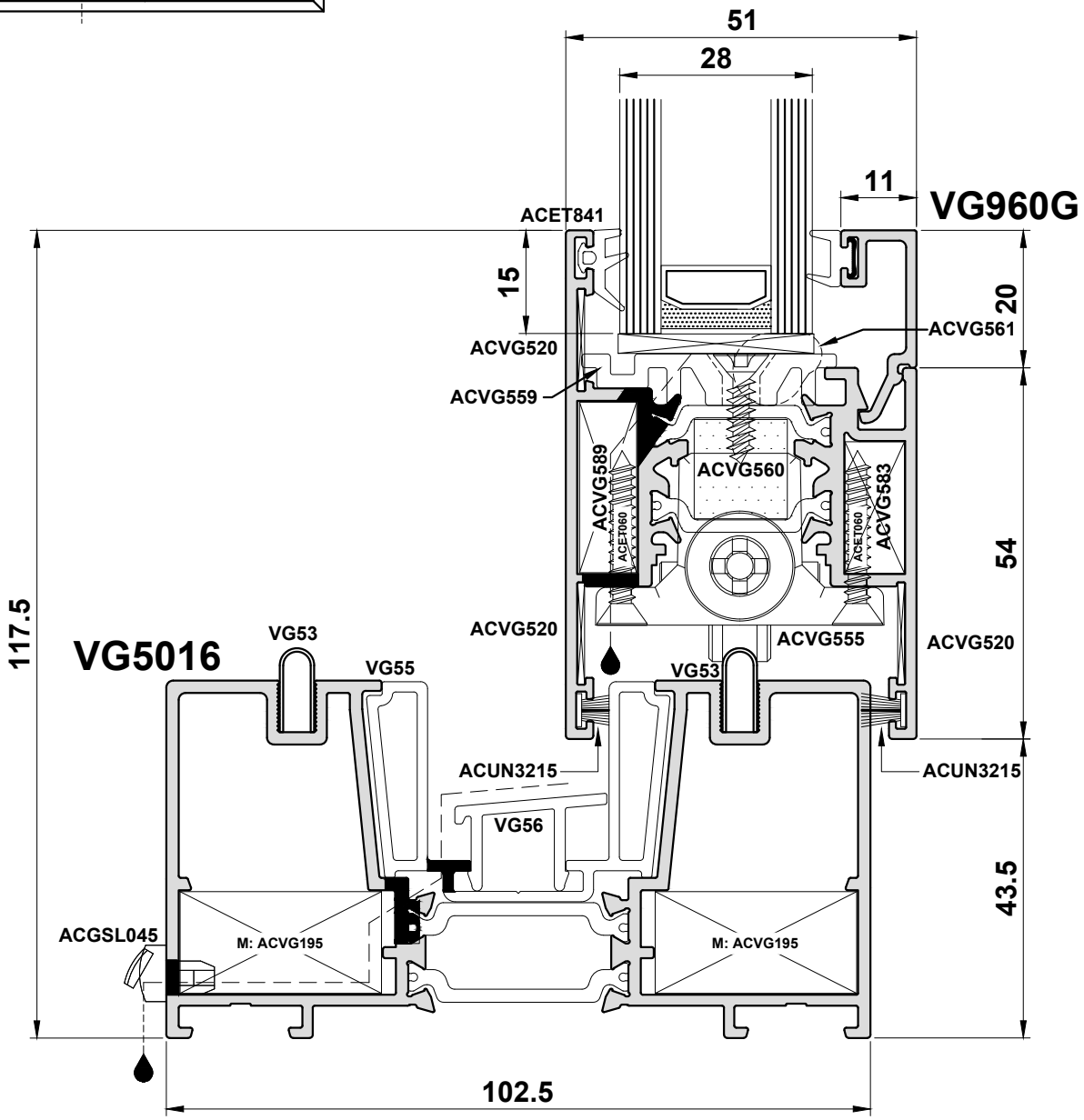

Do Not Scale From This Drawing

Detail 1H HYB

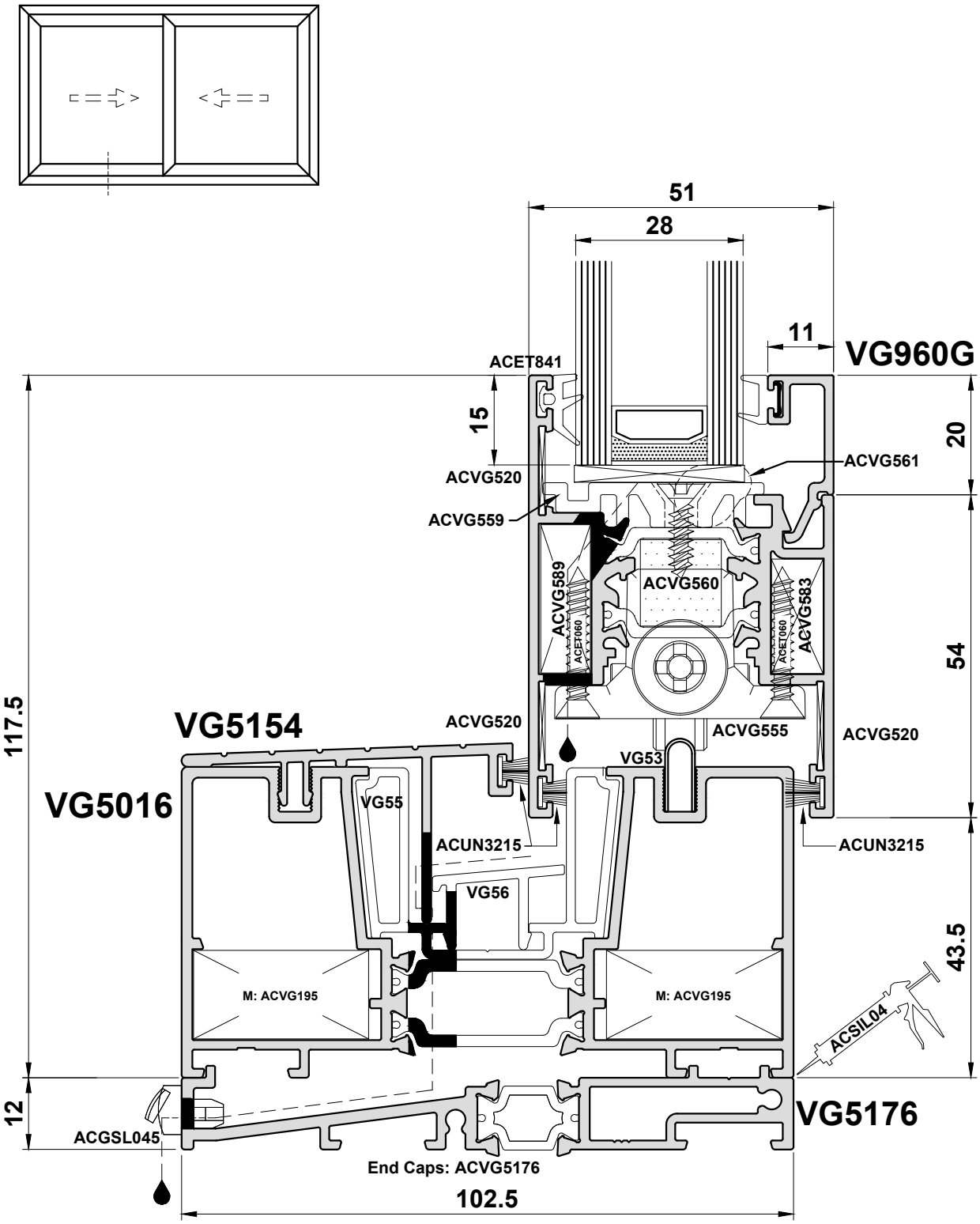

Do Not Scale From This Drawing

Detail 1I HYB

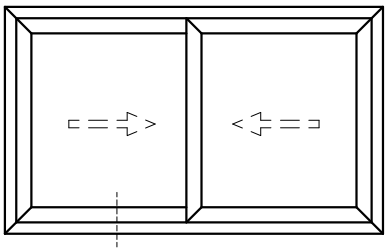

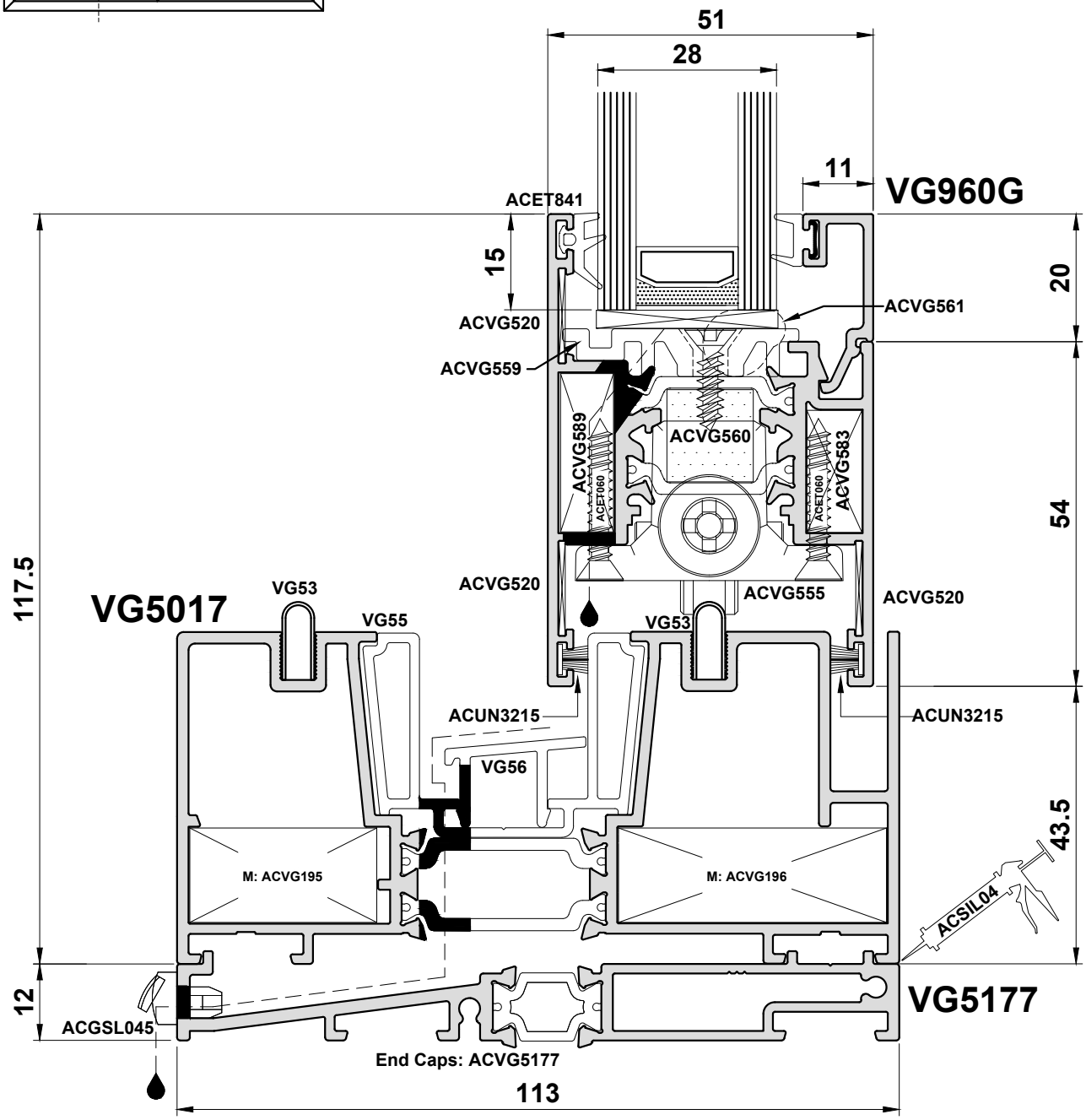

Do Not Scale From This Drawing

Detail 2A

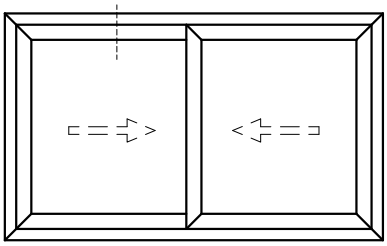

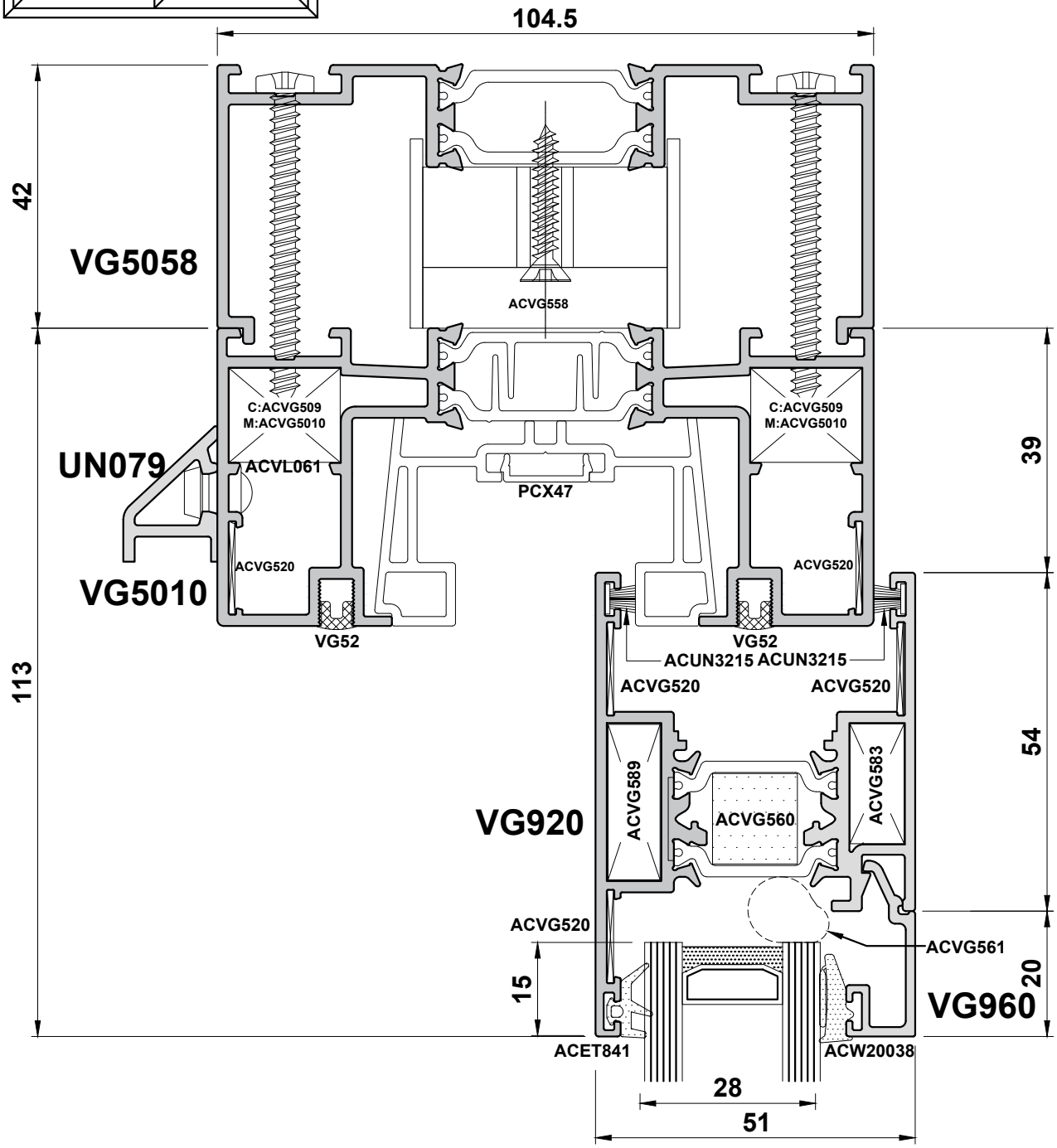

Do Not Scale From This Drawing

Visoglide Plus

Detail 2B

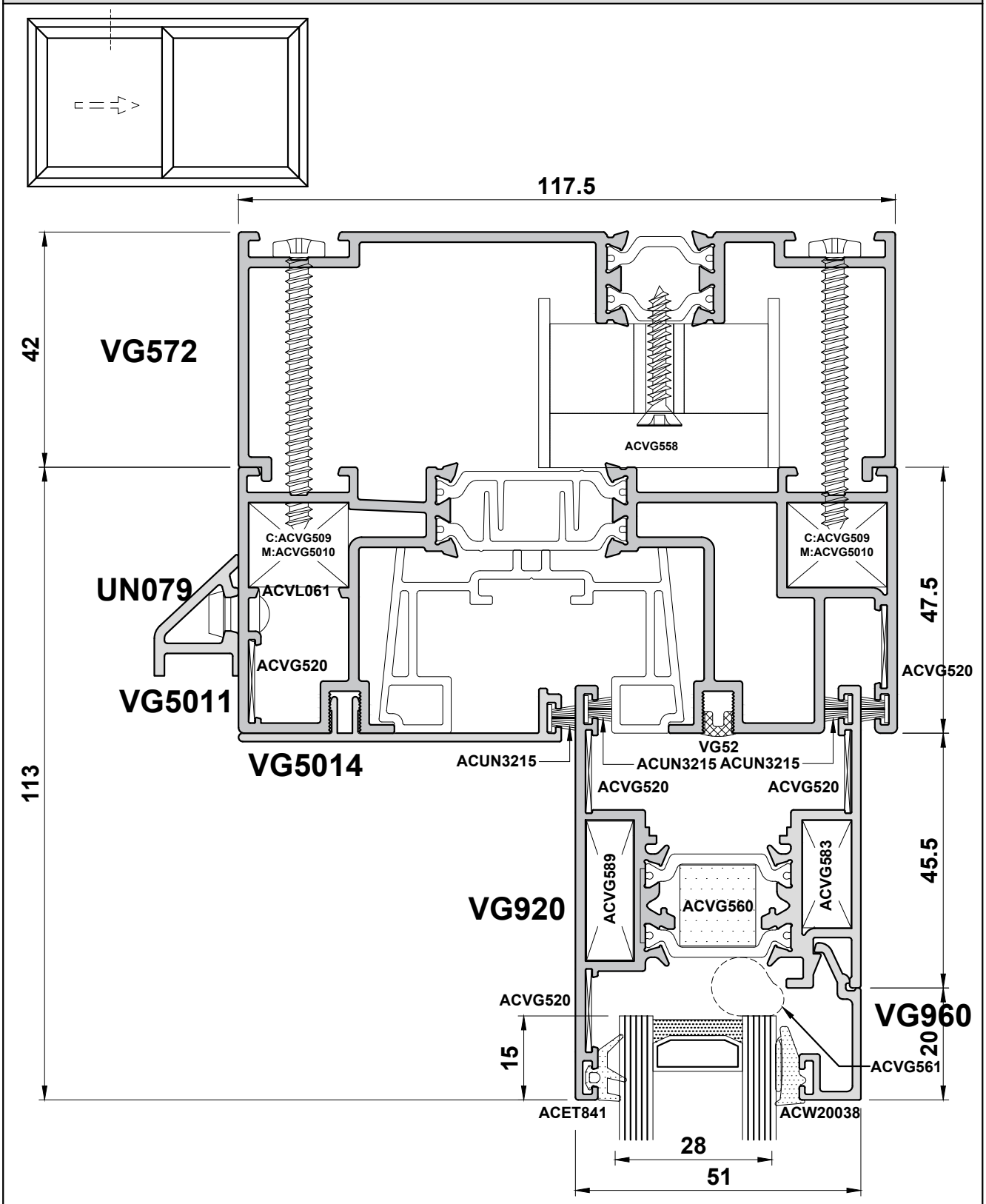

Do Not Scale From This Drawing

Detail 2C

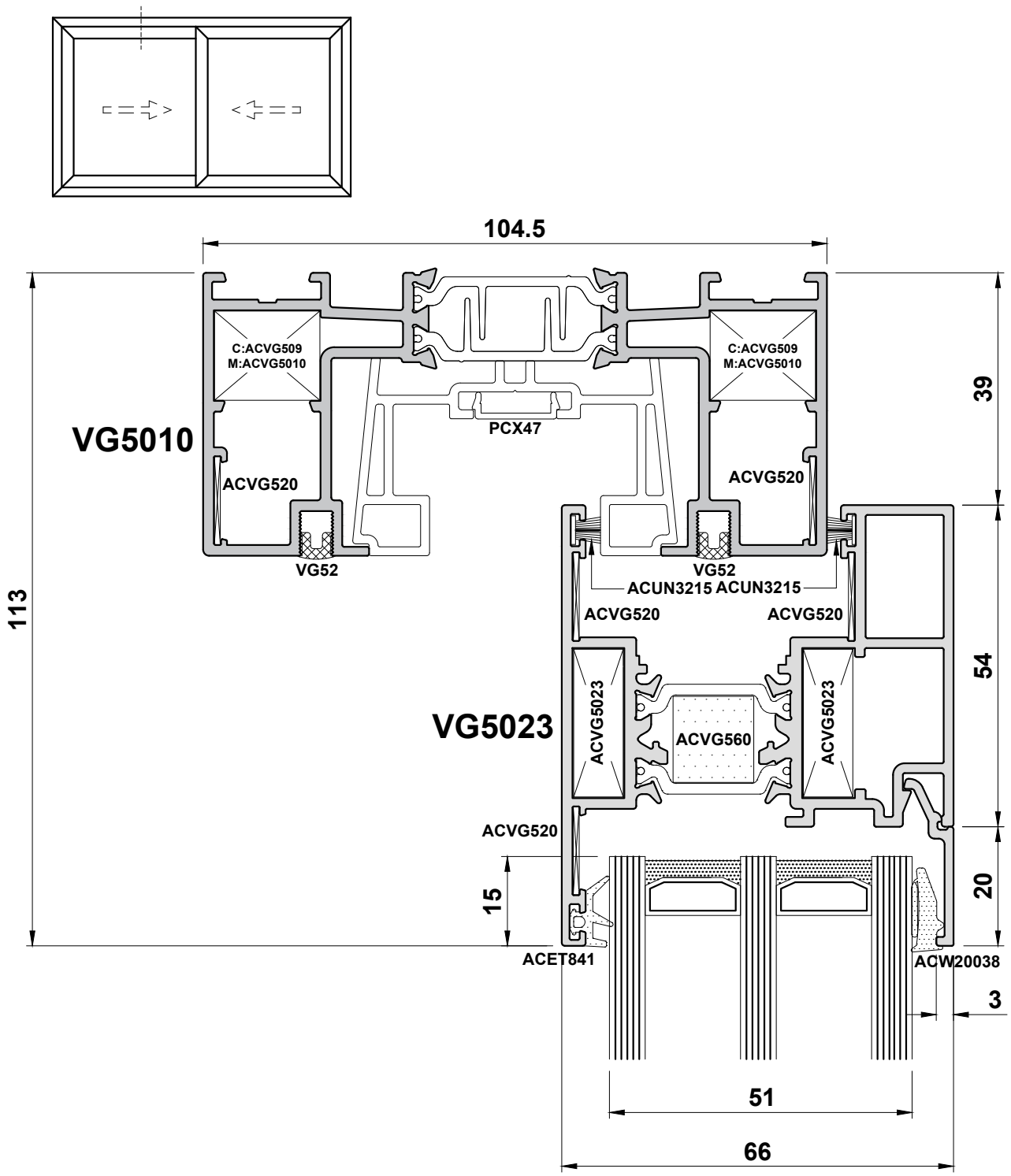

Do Not Scale From This Drawing

Detail 2D

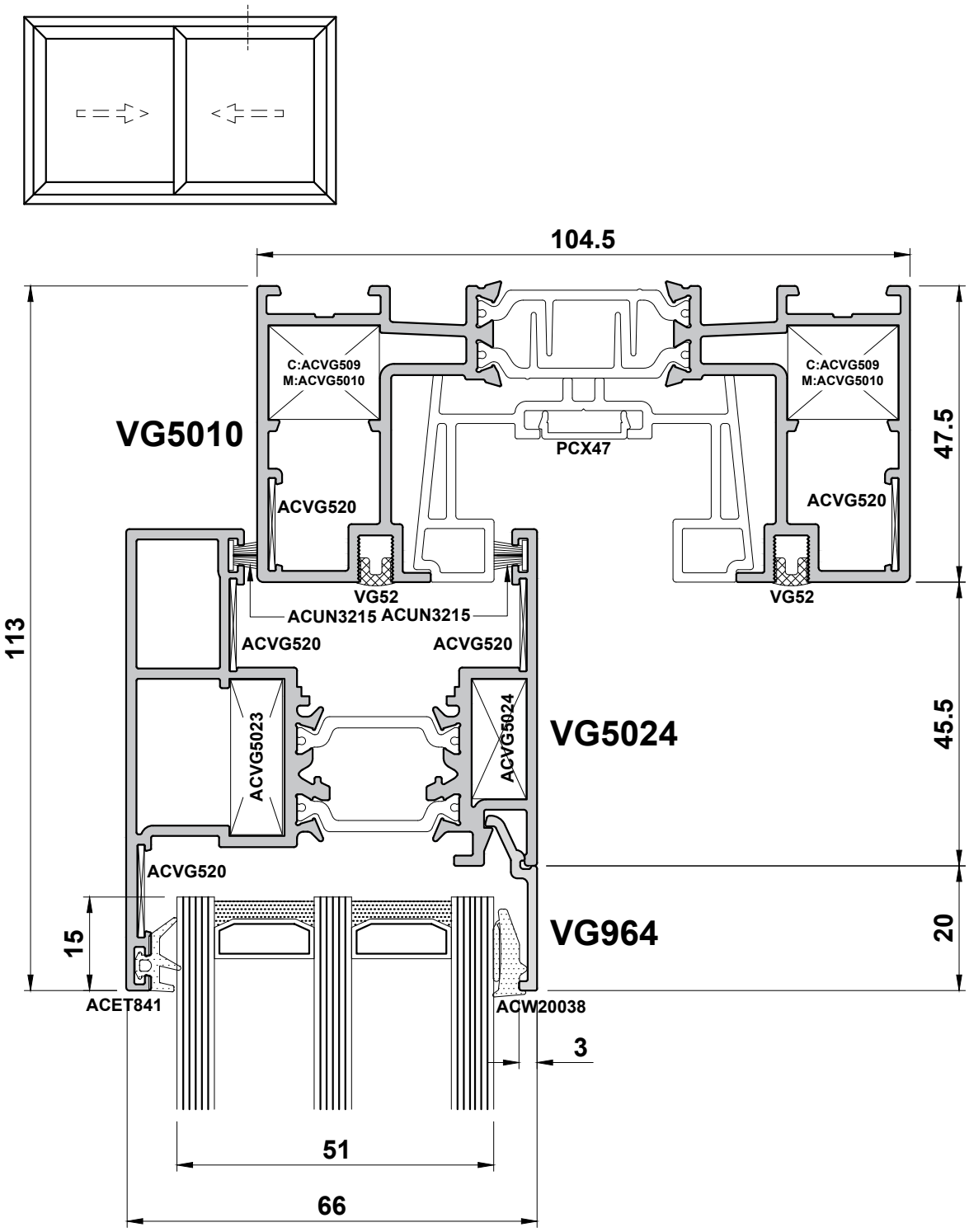

Do Not Scale From This Drawing

Visoglide Plus

Detail 2E HYB

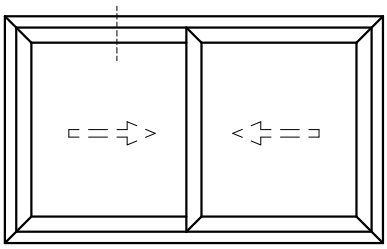

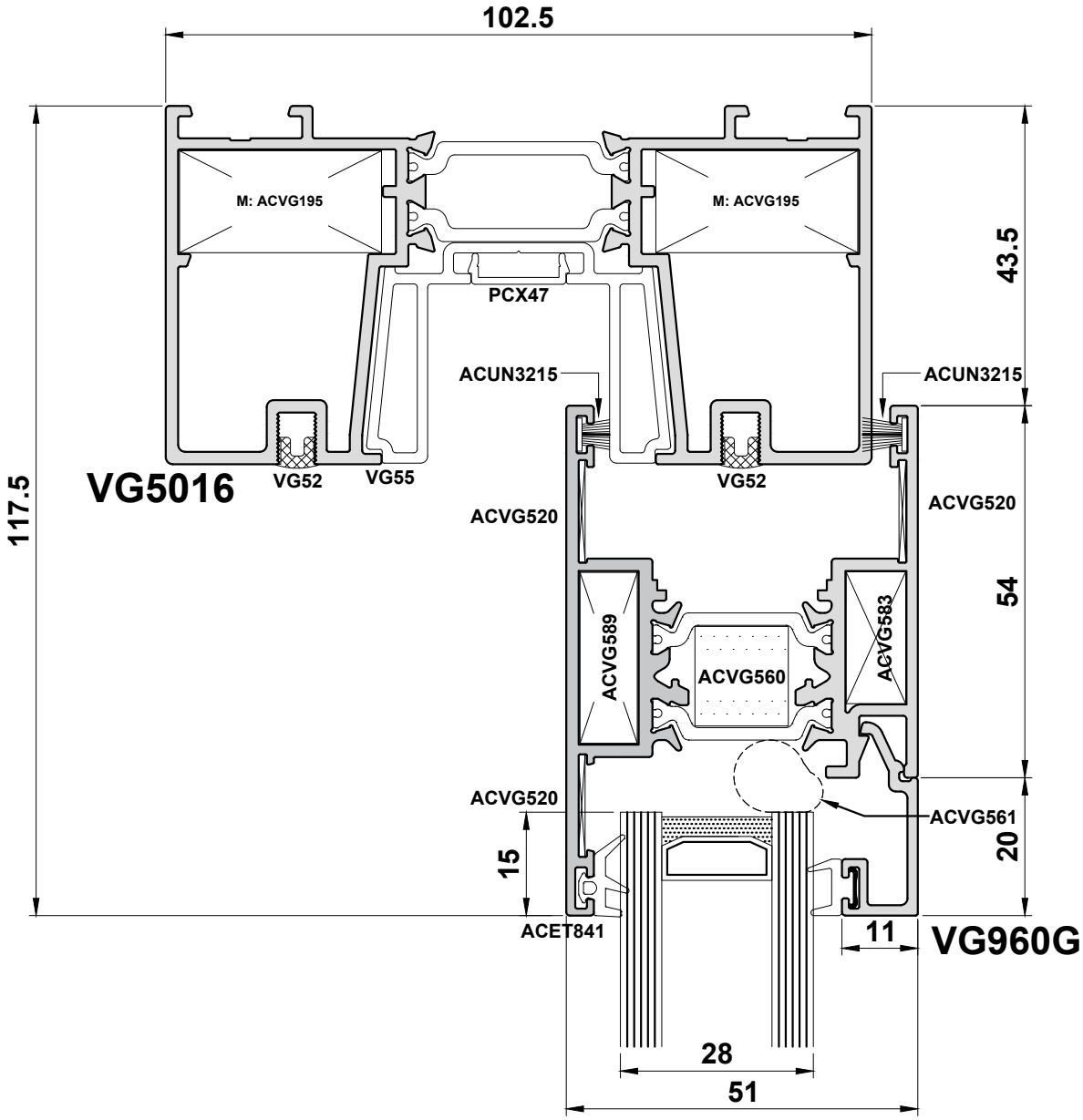

Do Not Scale From This Drawing

Detail 2F HYB

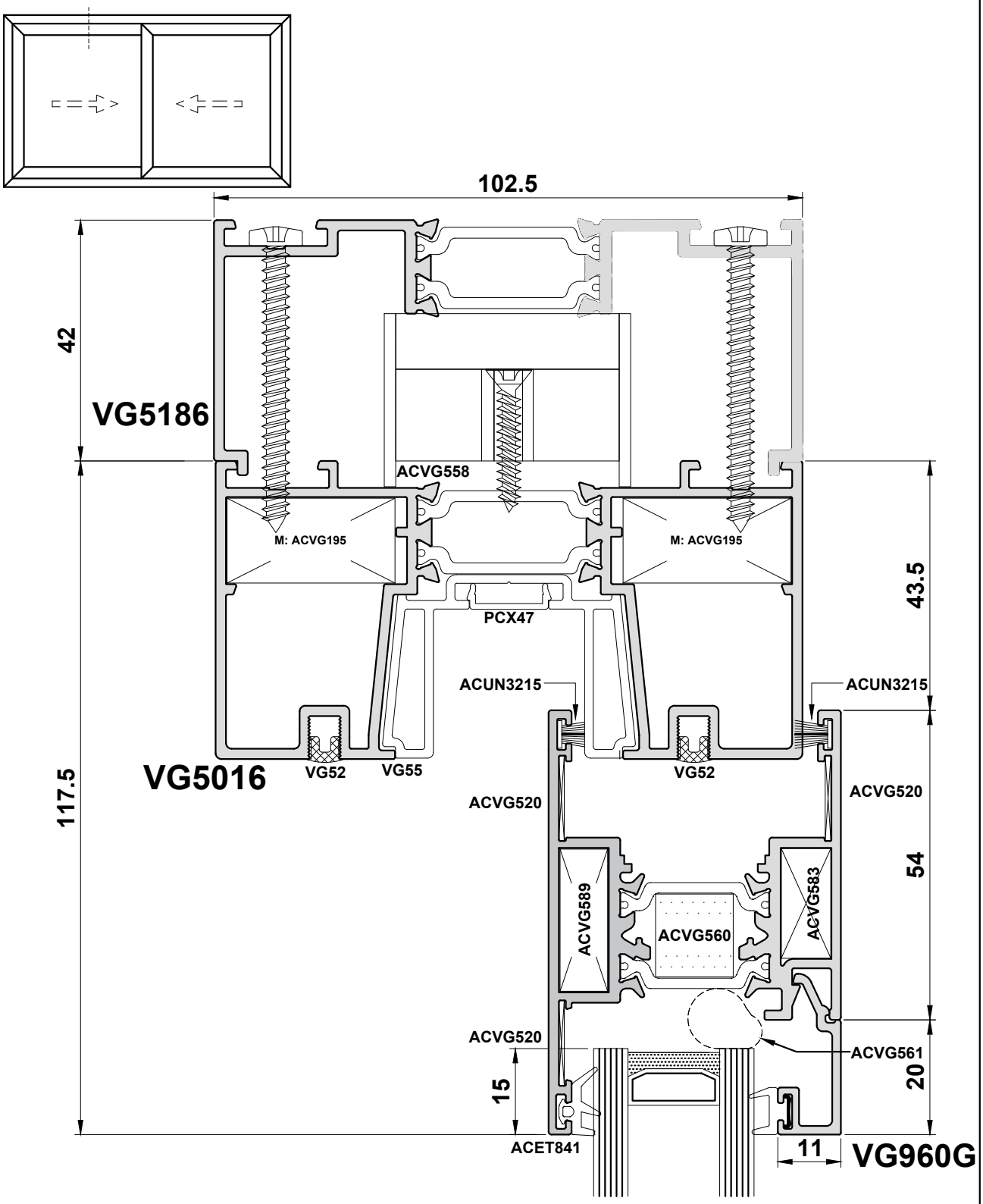

Do Not Scale From This Drawing

Detail 2G HYB

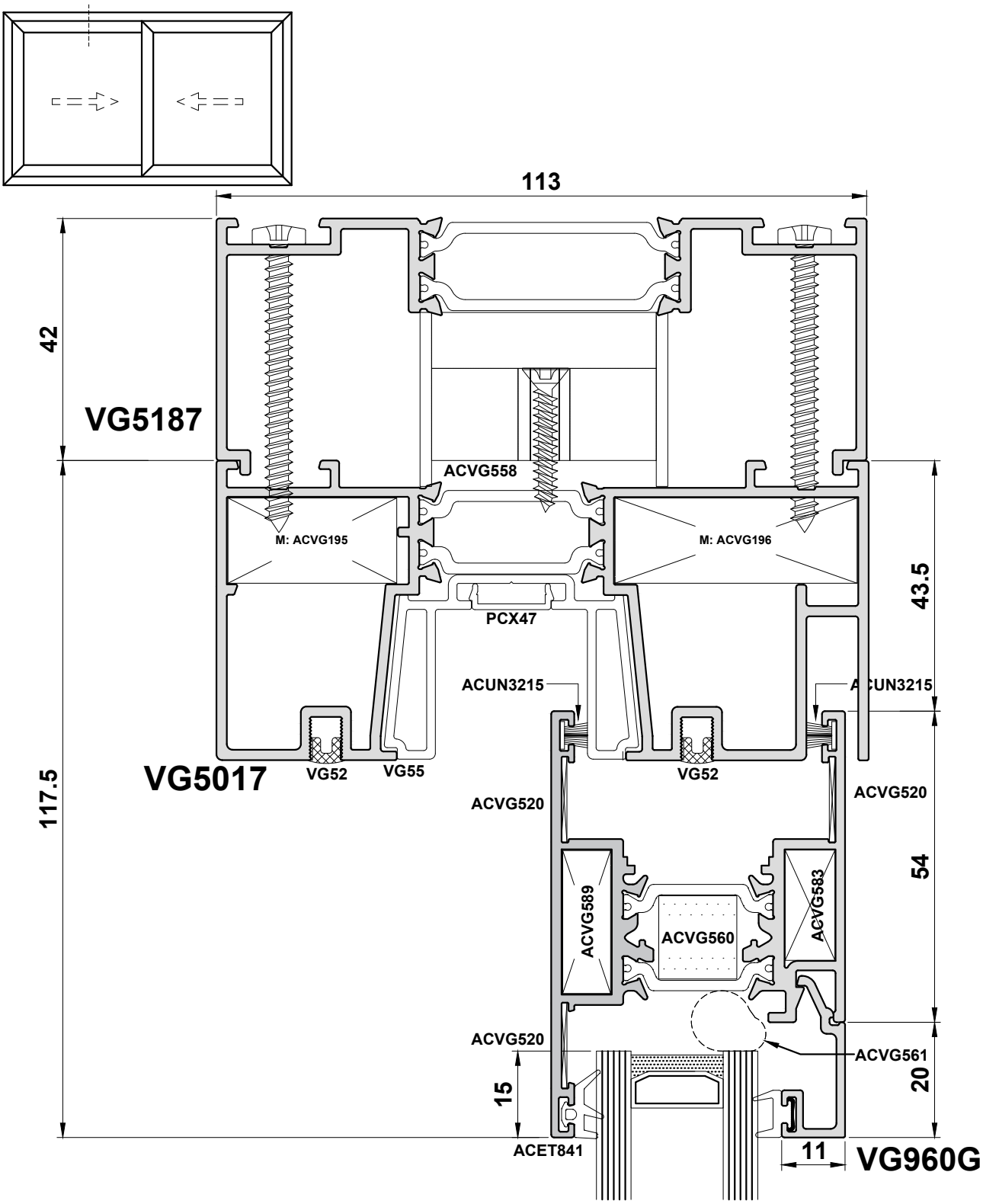

Do Not Scale From This Drawing

Detail 3A

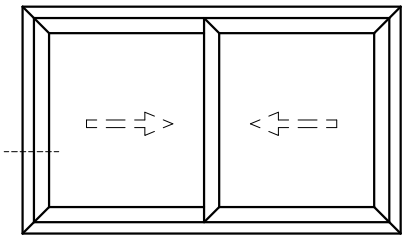

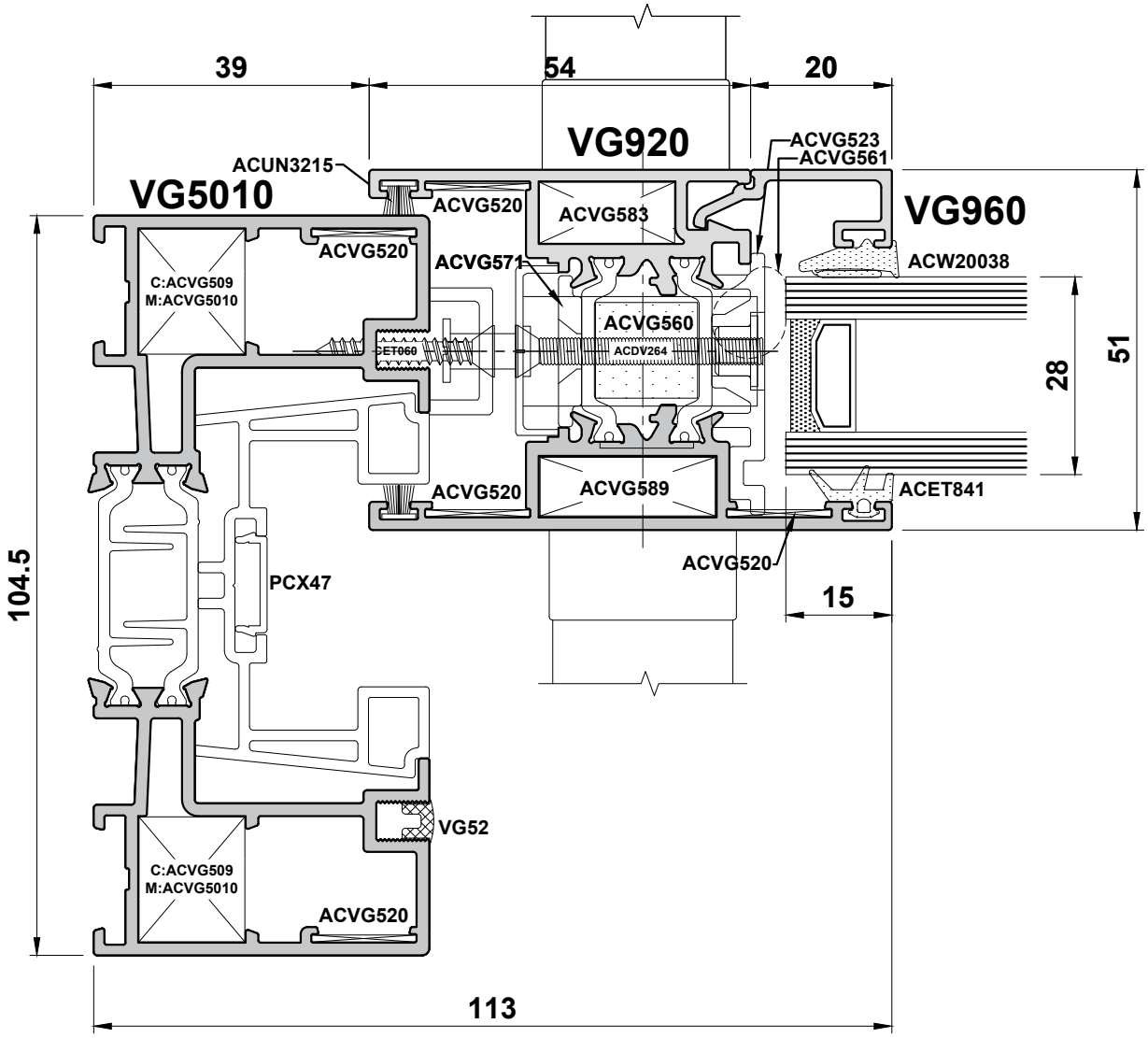

Do Not Scale From This Drawing

Detail 3B

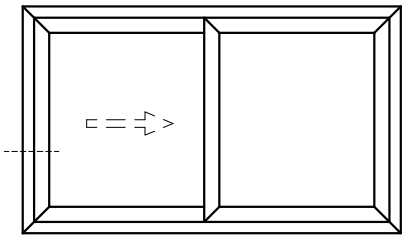

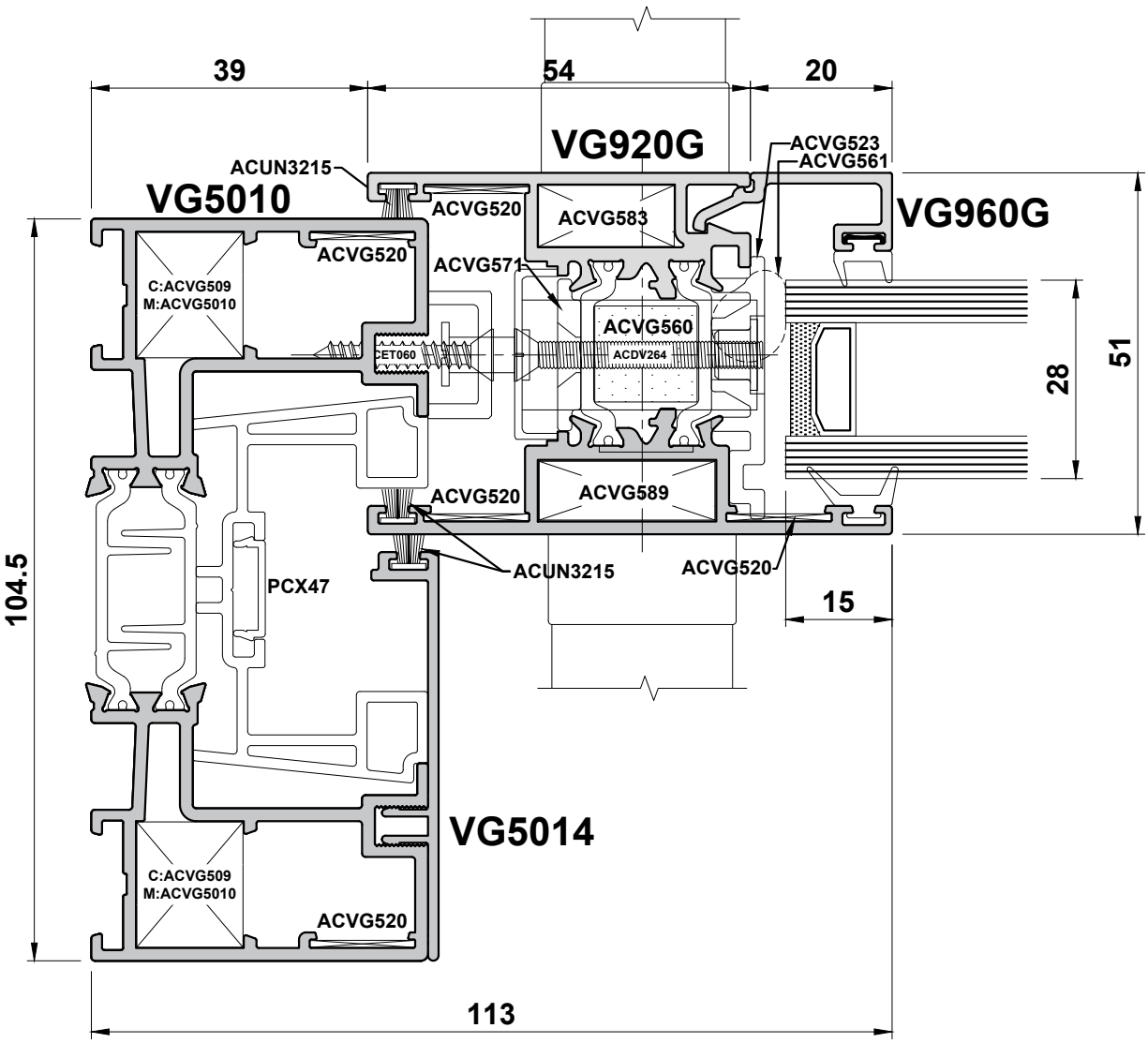

Do Not Scale From This Drawing

Detail 3C

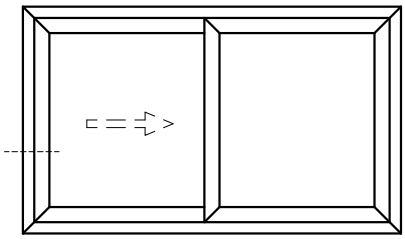

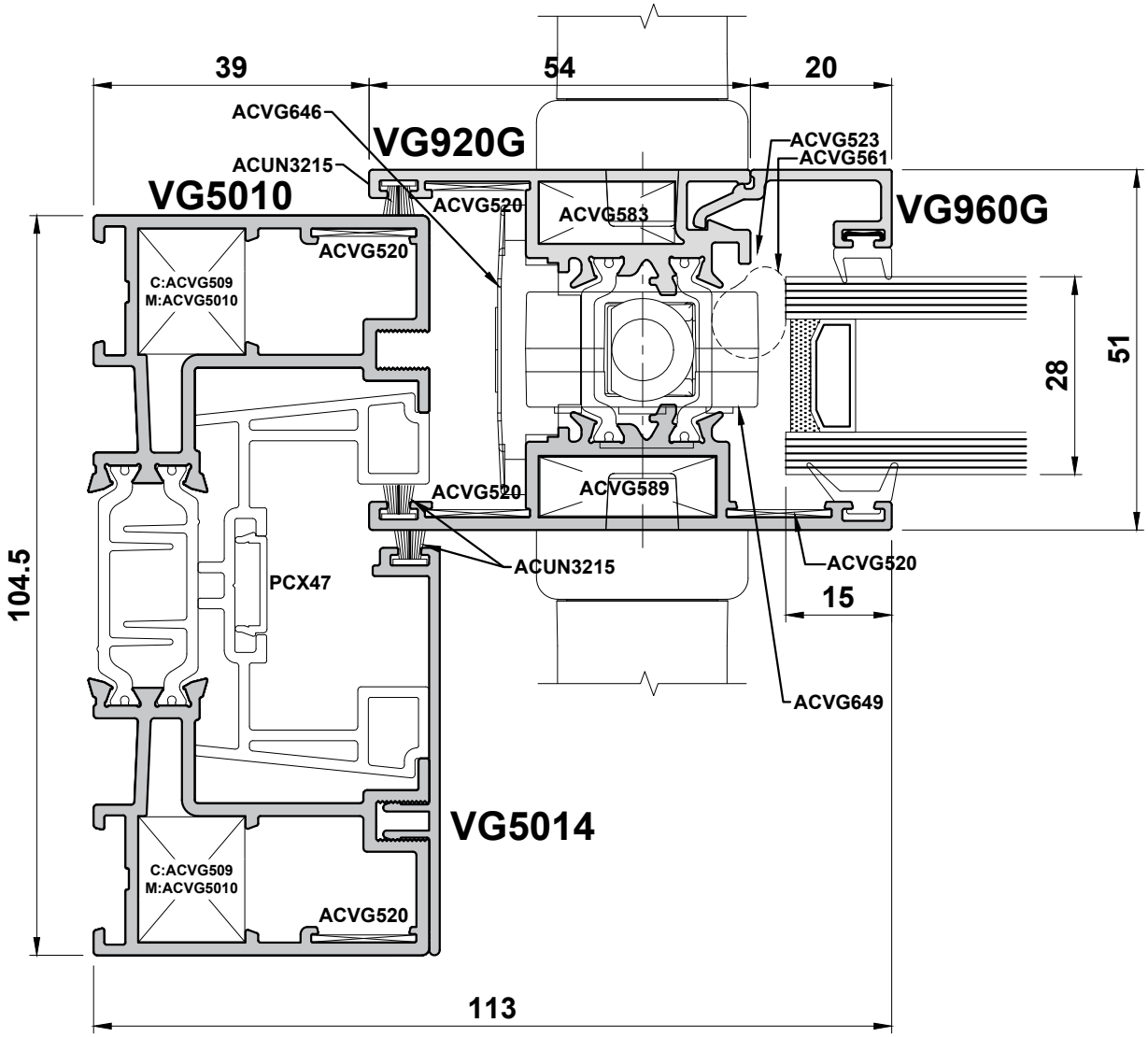

Do Not Scale From This Drawing

Detail 3D

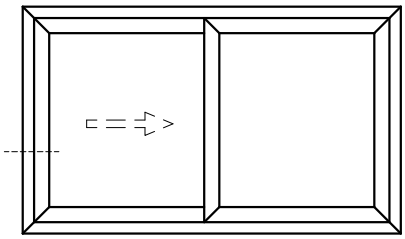

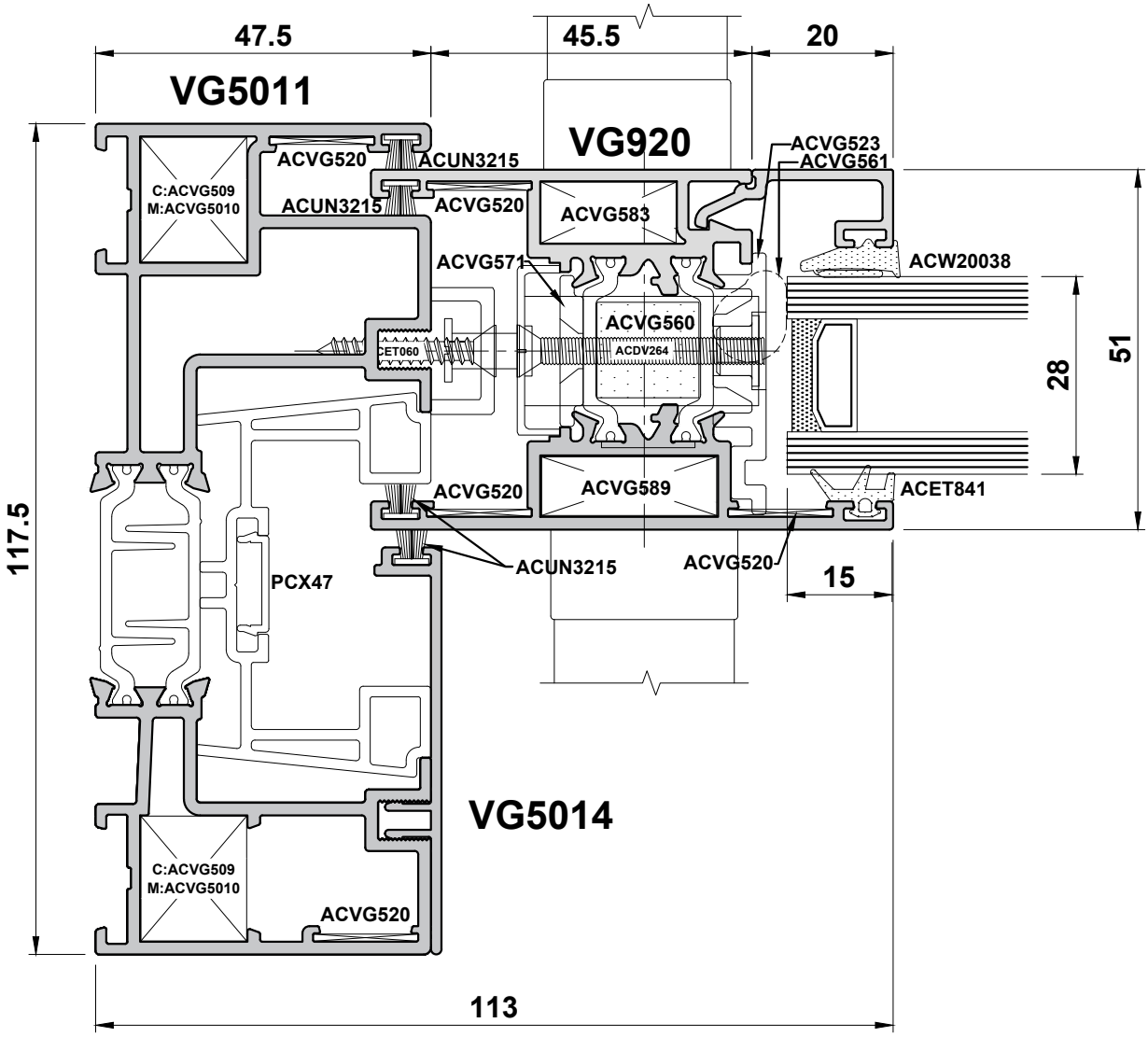

Do Not Scale From This Drawing

Detail 3E

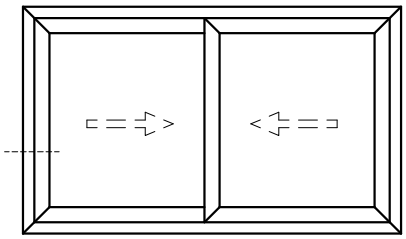

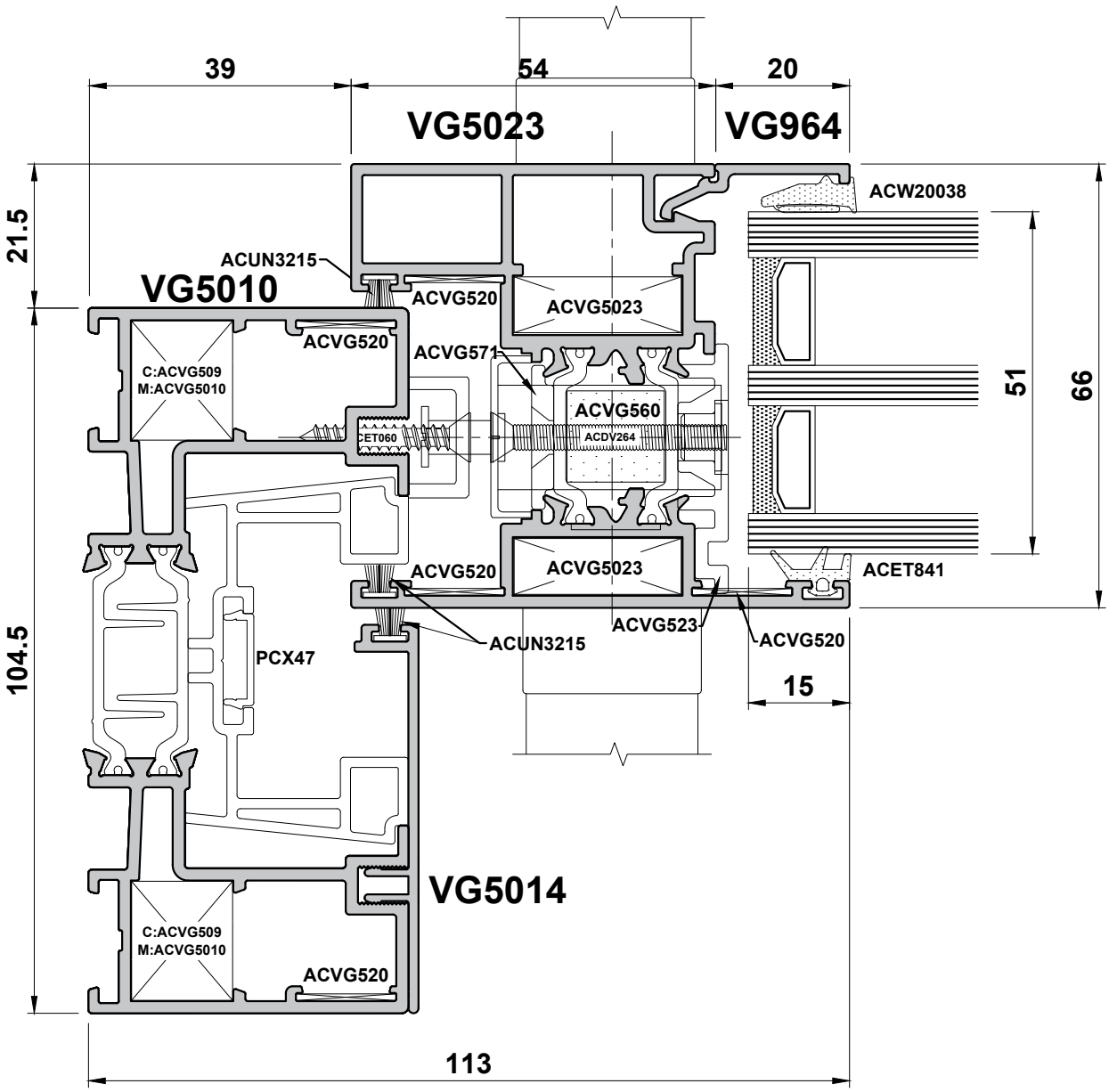

Do Not Scale From This Drawing

Detail 3F

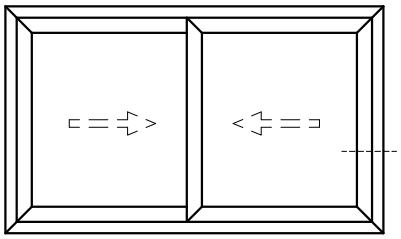

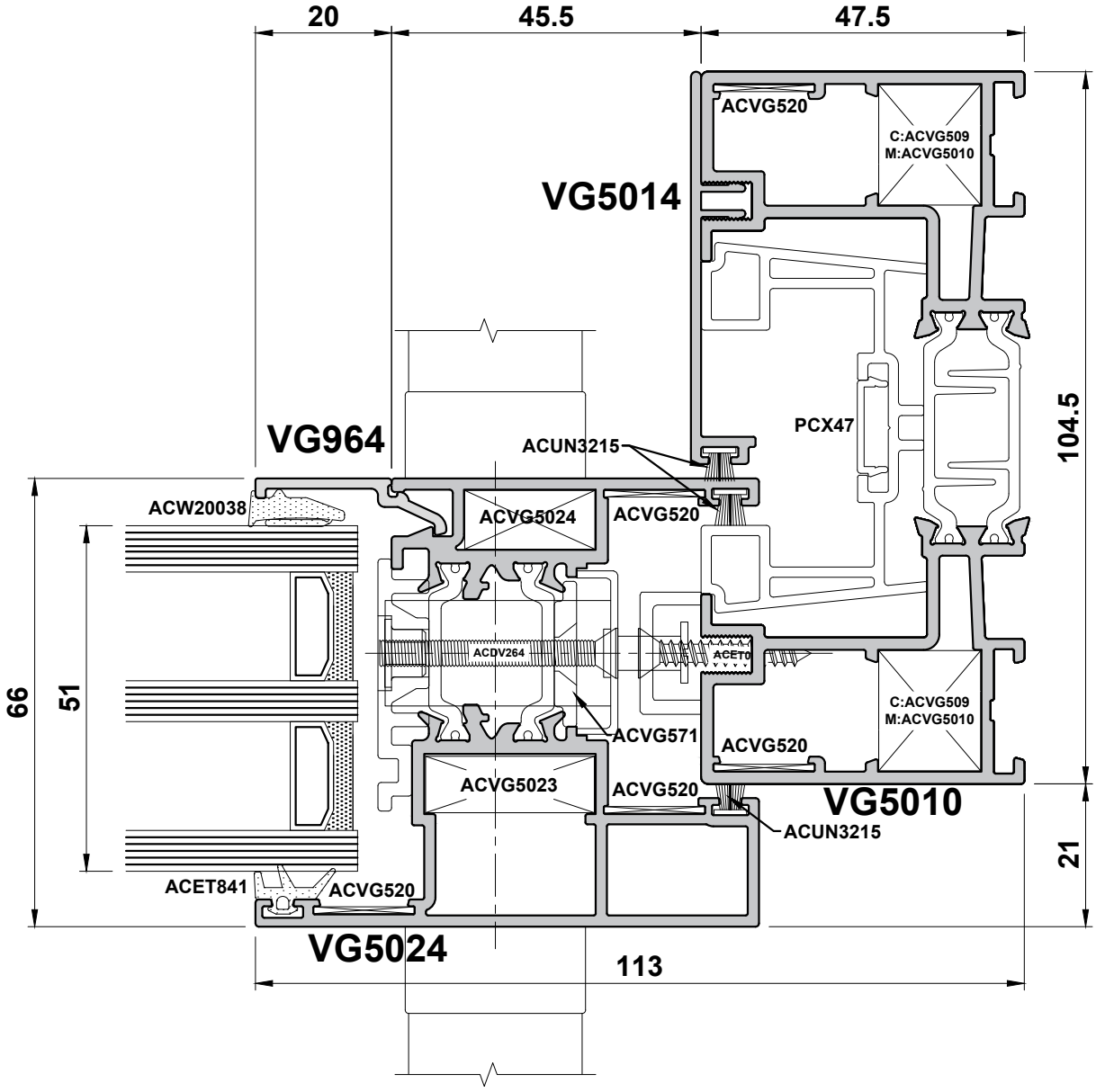

Do Not Scale From This Drawing

Detail 3G HYB

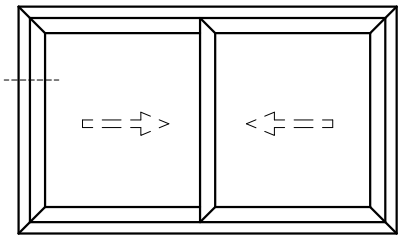

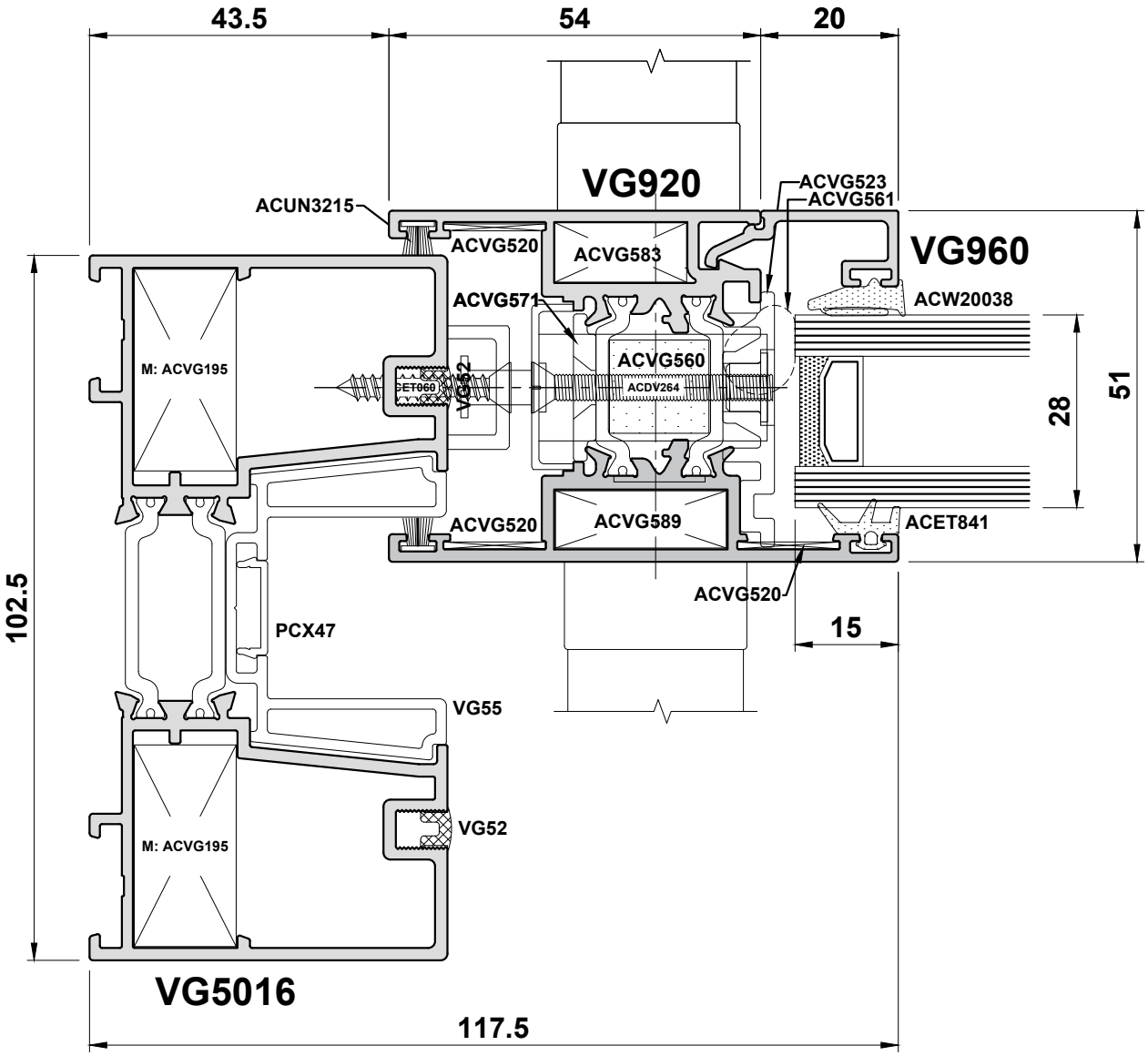

Do Not Scale From This Drawing

Detail 3H HYB

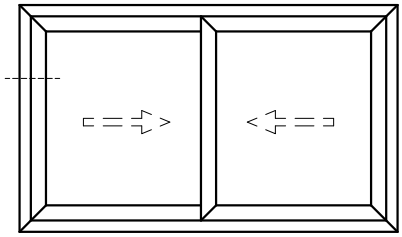

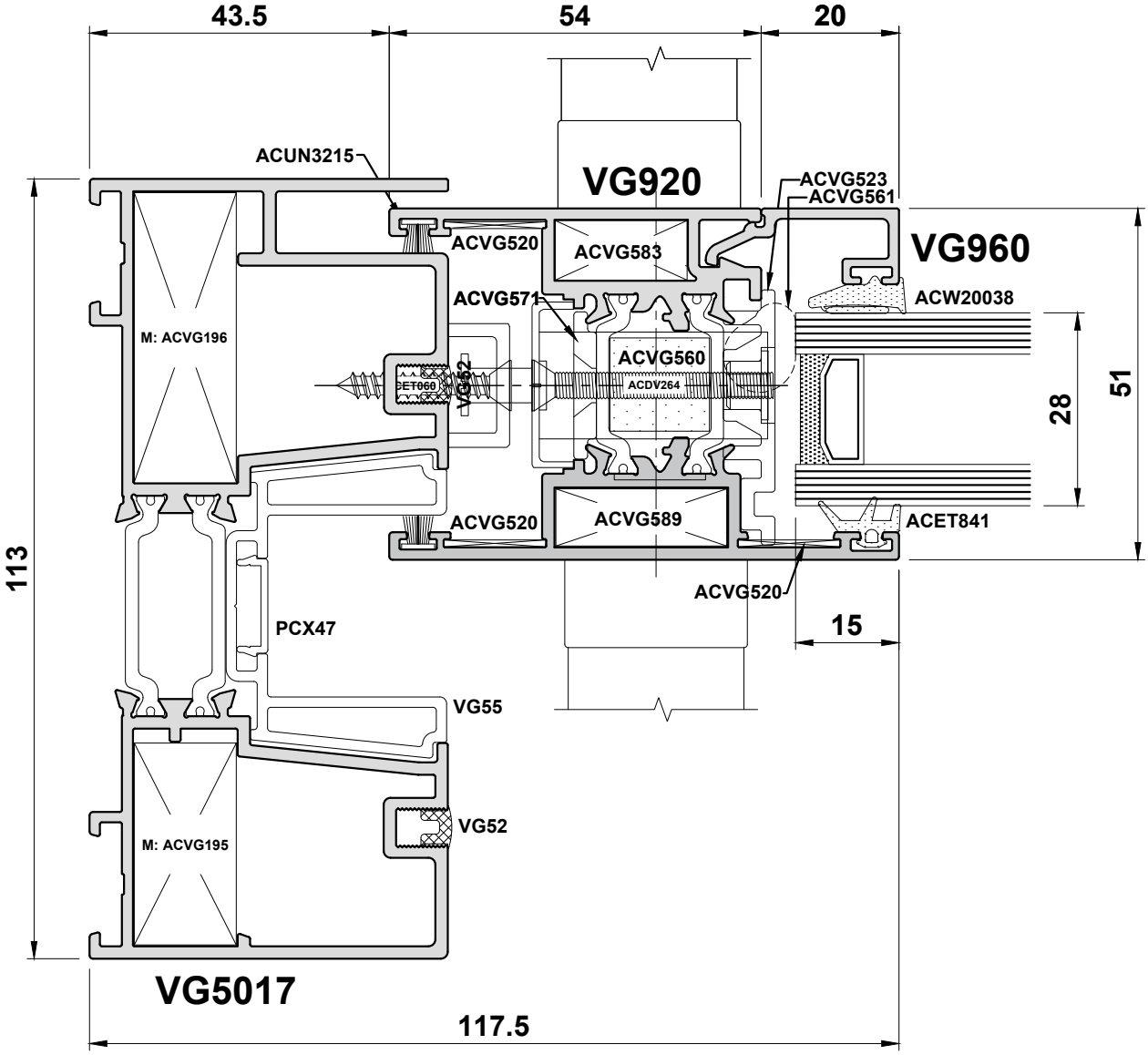

Do Not Scale From This Drawing

Detail 4A

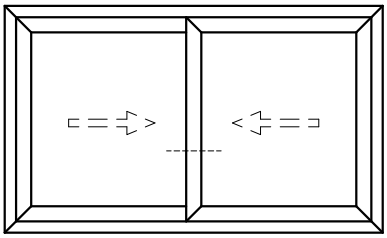

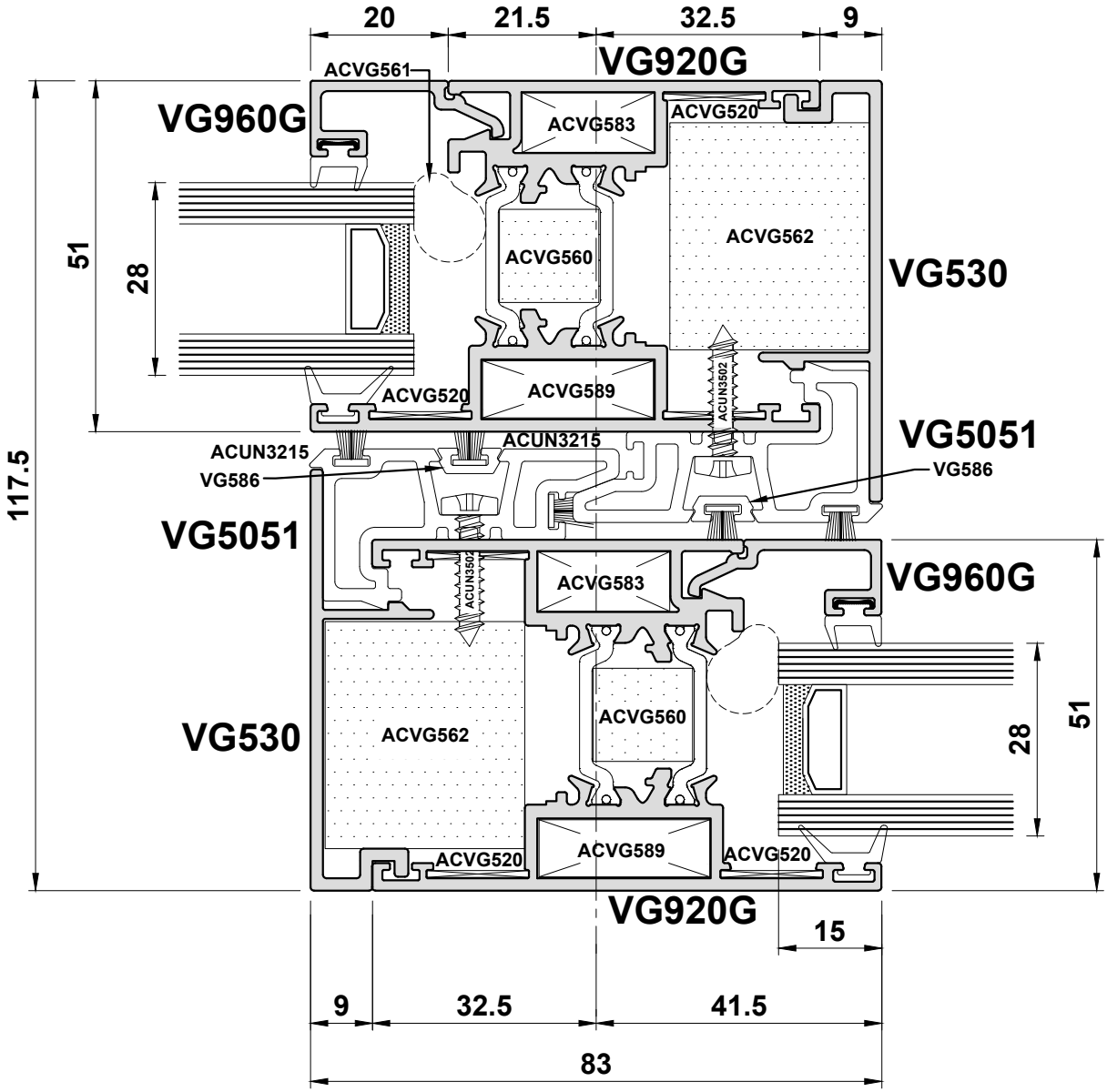

Do Not Scale From This Drawing

Detail 4B

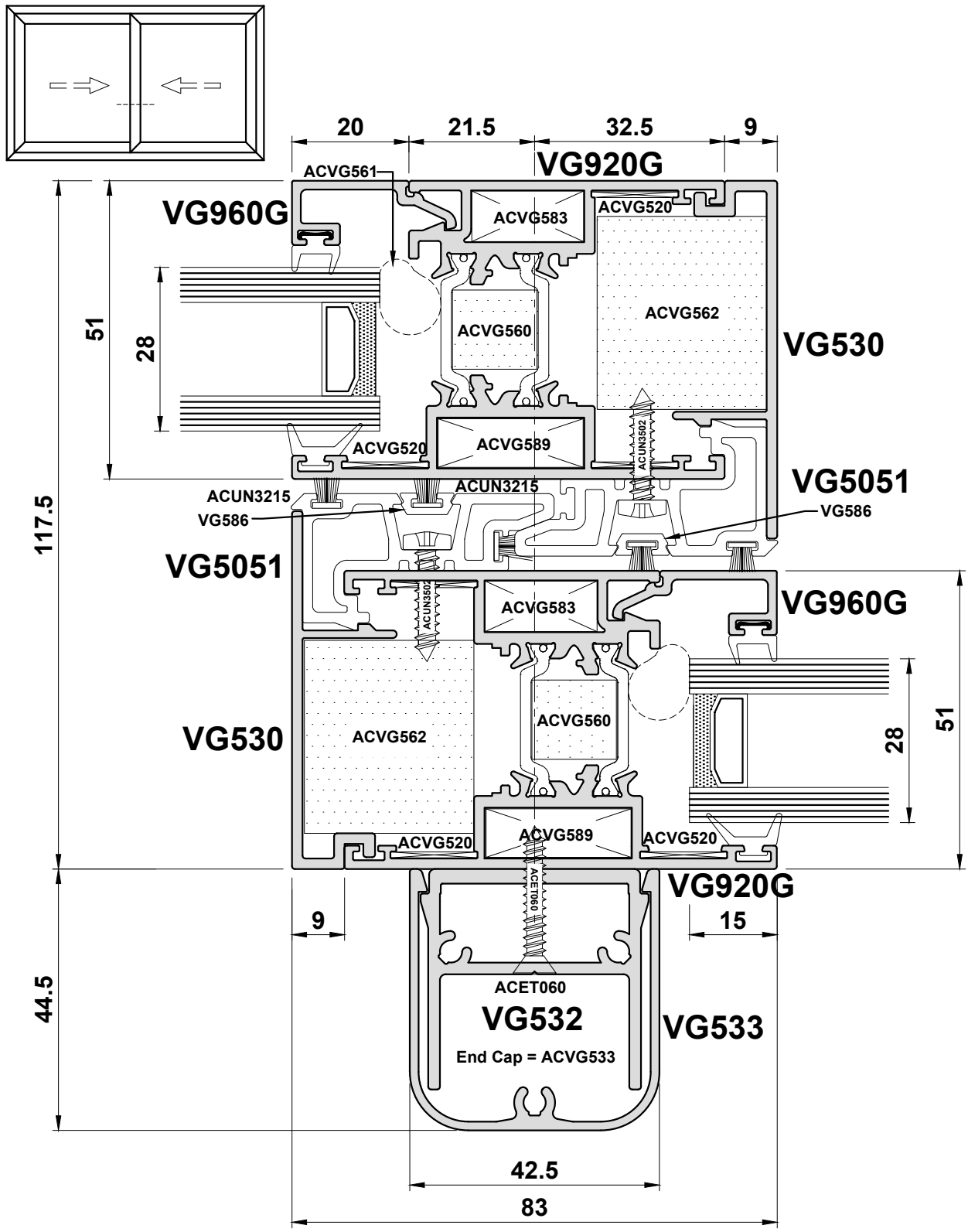

Do Not Scale From This Drawing

Detail 4C

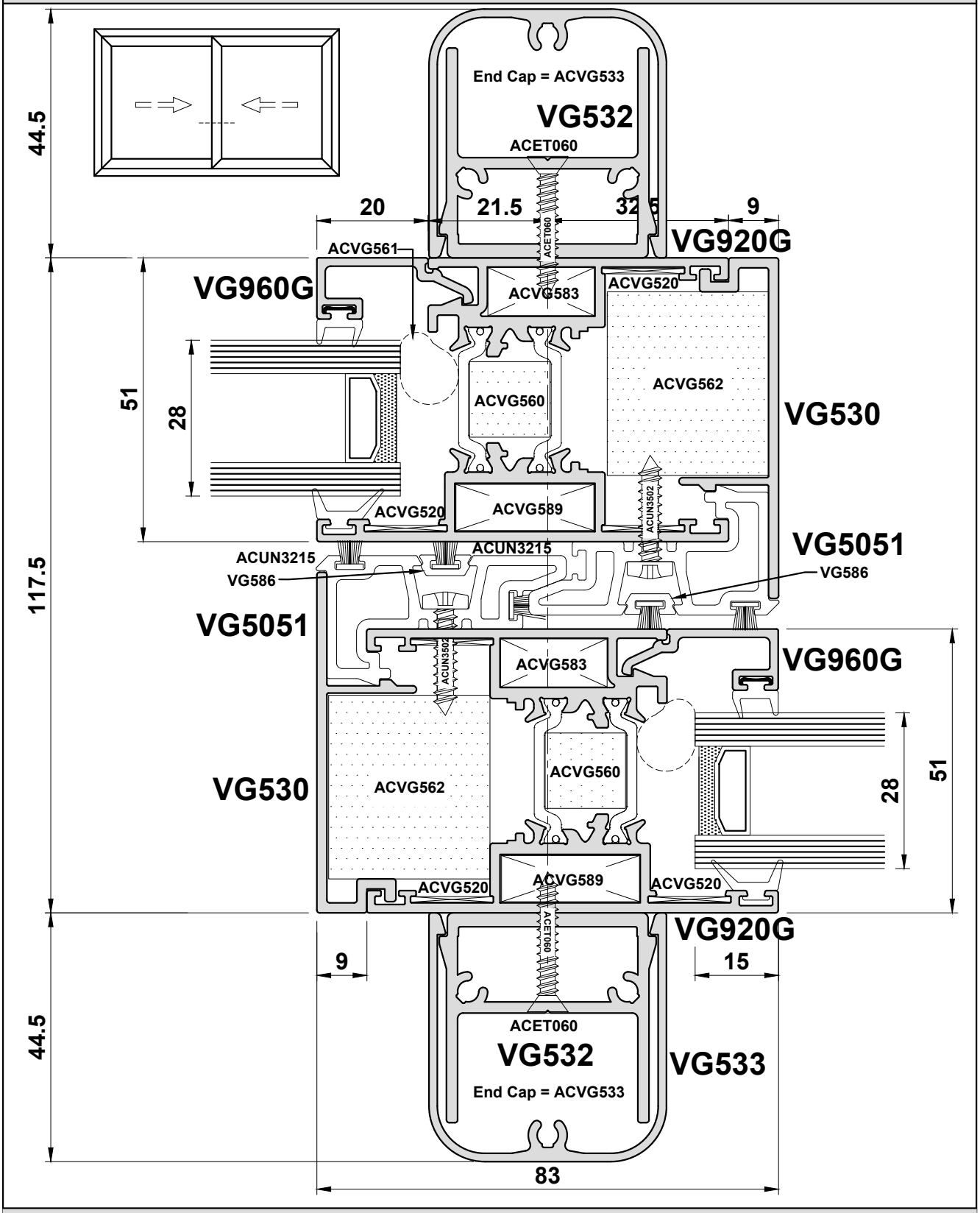

Do Not Scale From This Drawing

Detail 4D

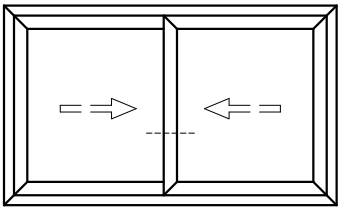

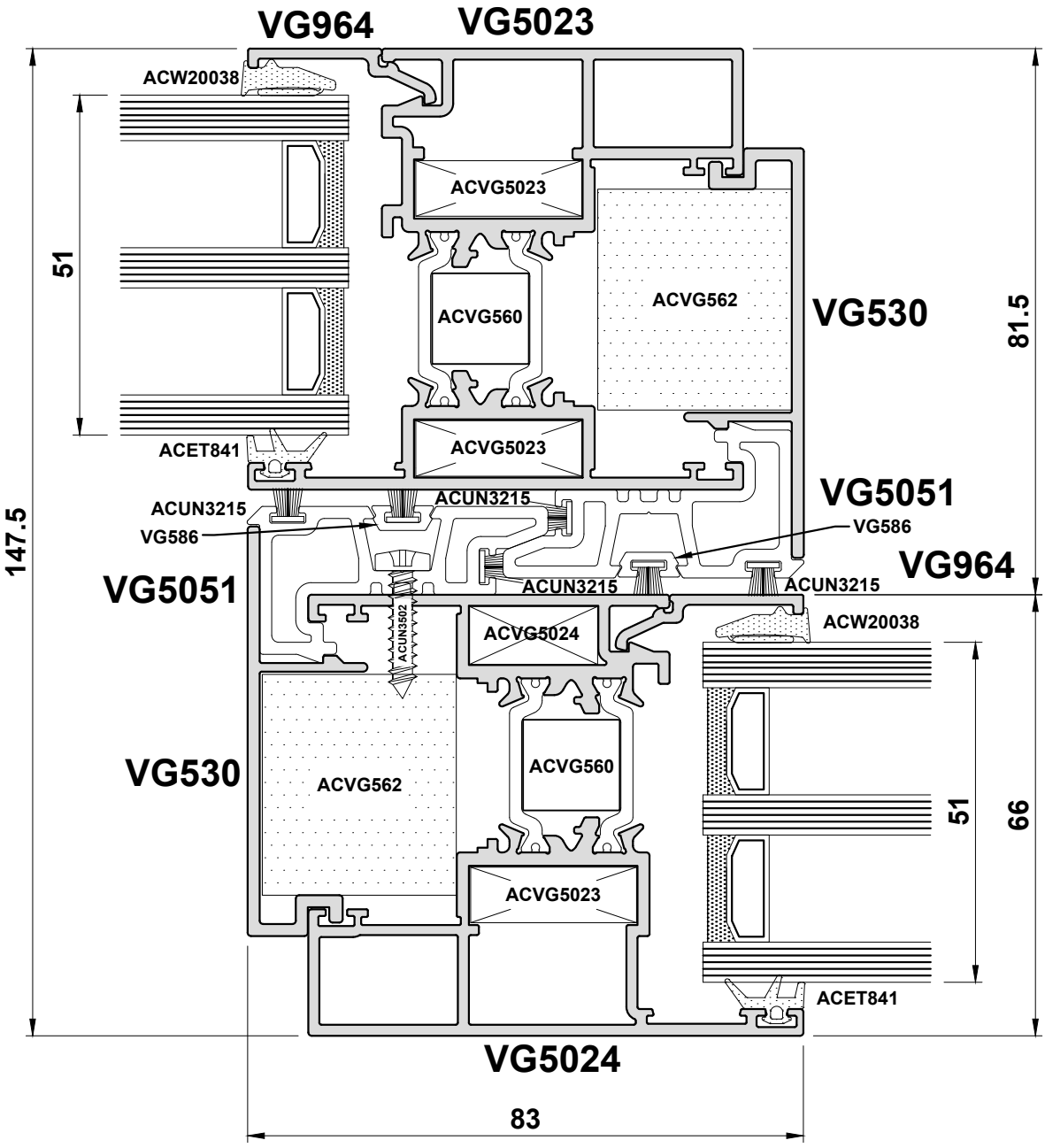

Do Not Scale From This Drawing

Detail 4E HYB

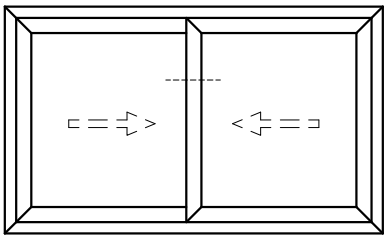

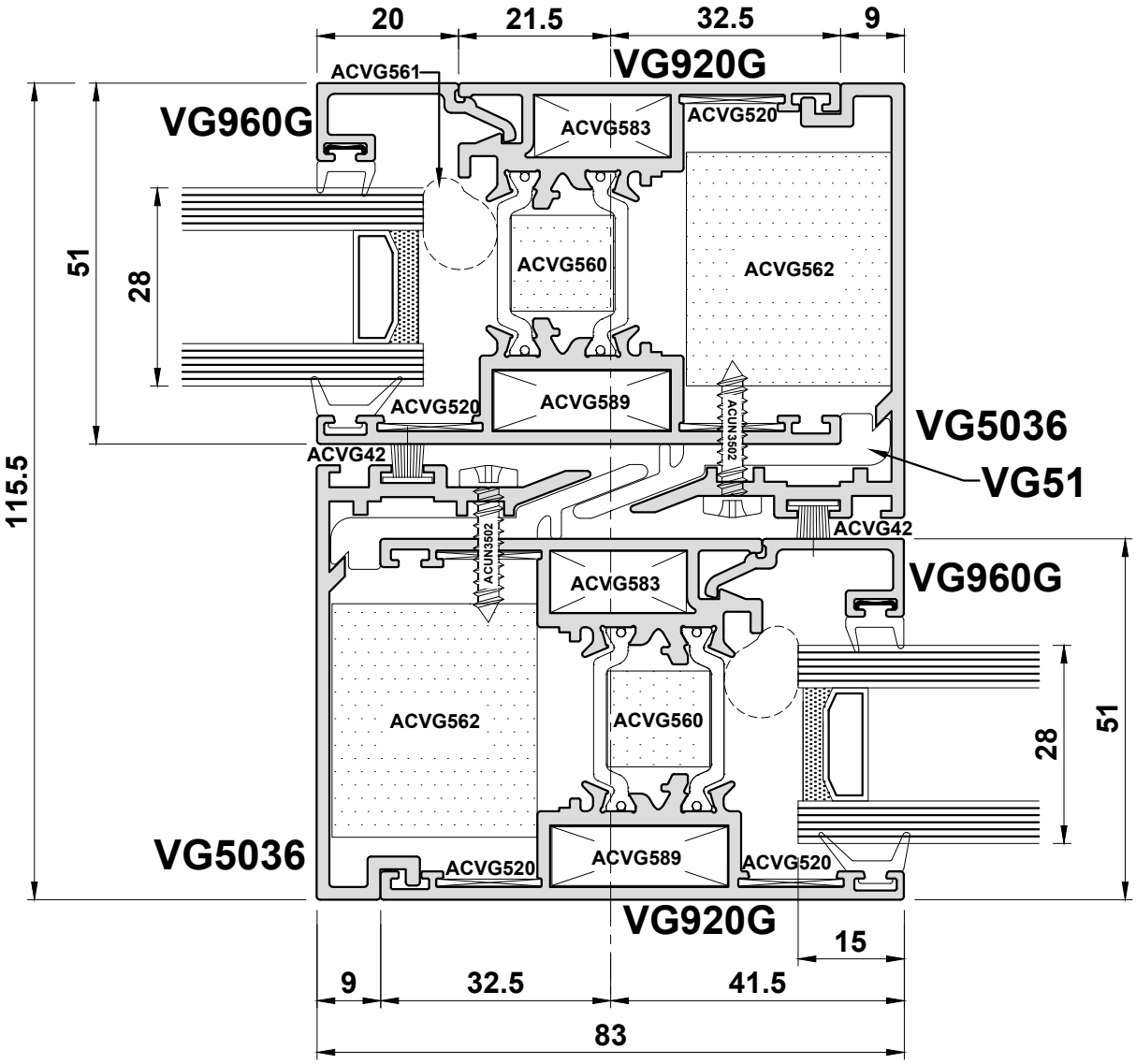

Do Not Scale From This Drawing

Detail 4F

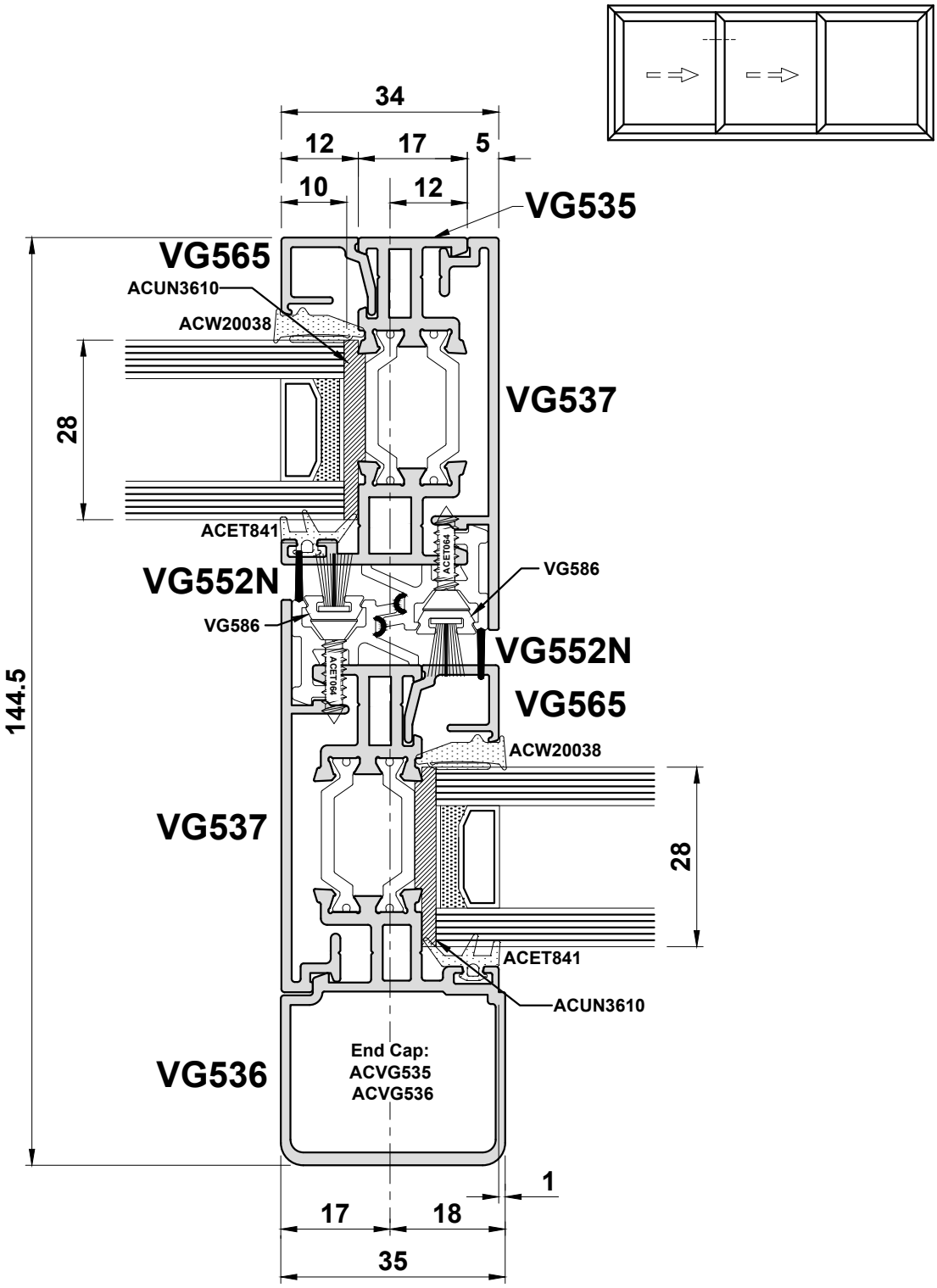

Do Not Scale From This Drawing

Detail 4G HYB

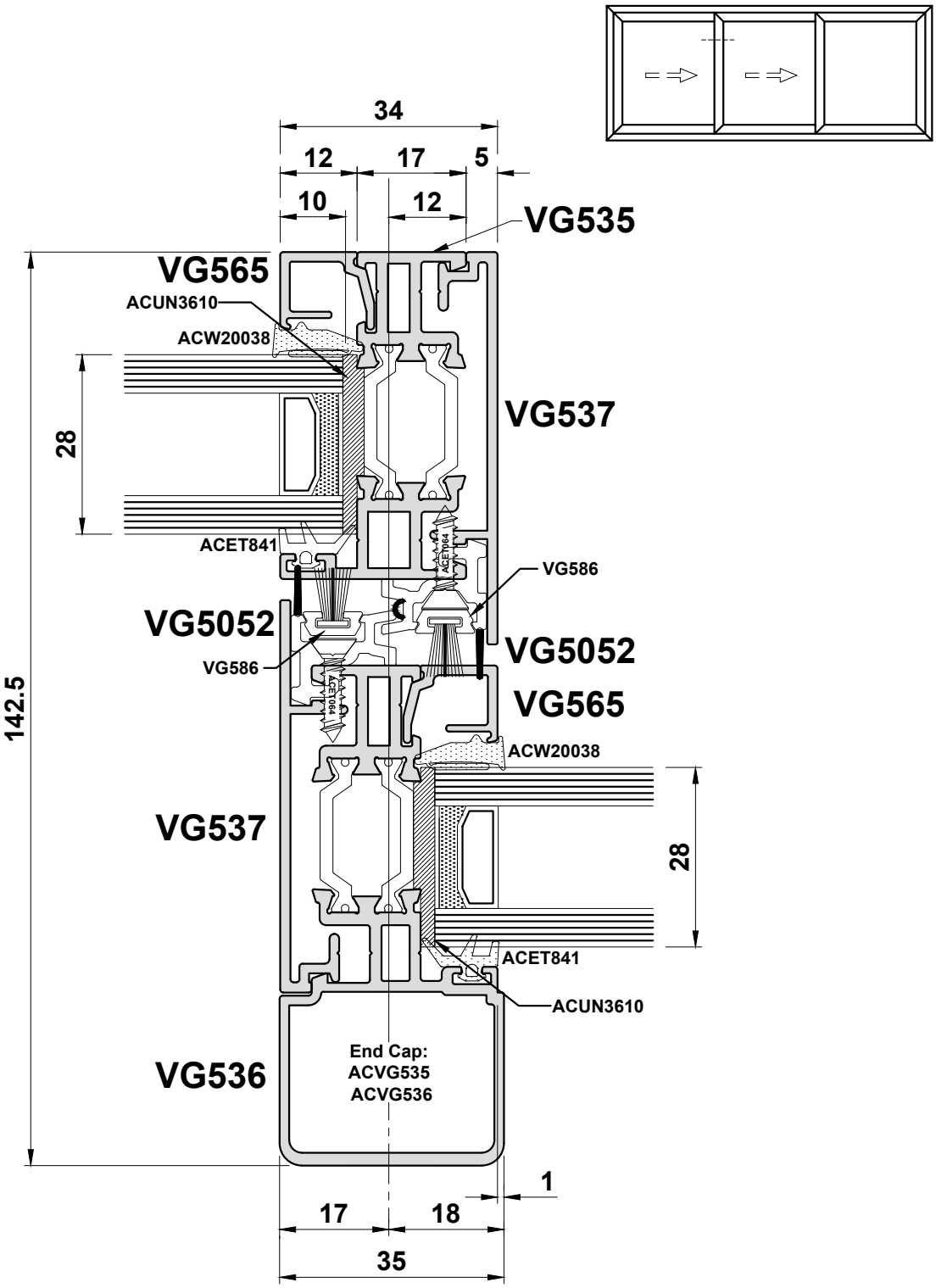

Do Not Scale From This Drawing

Detail 4H

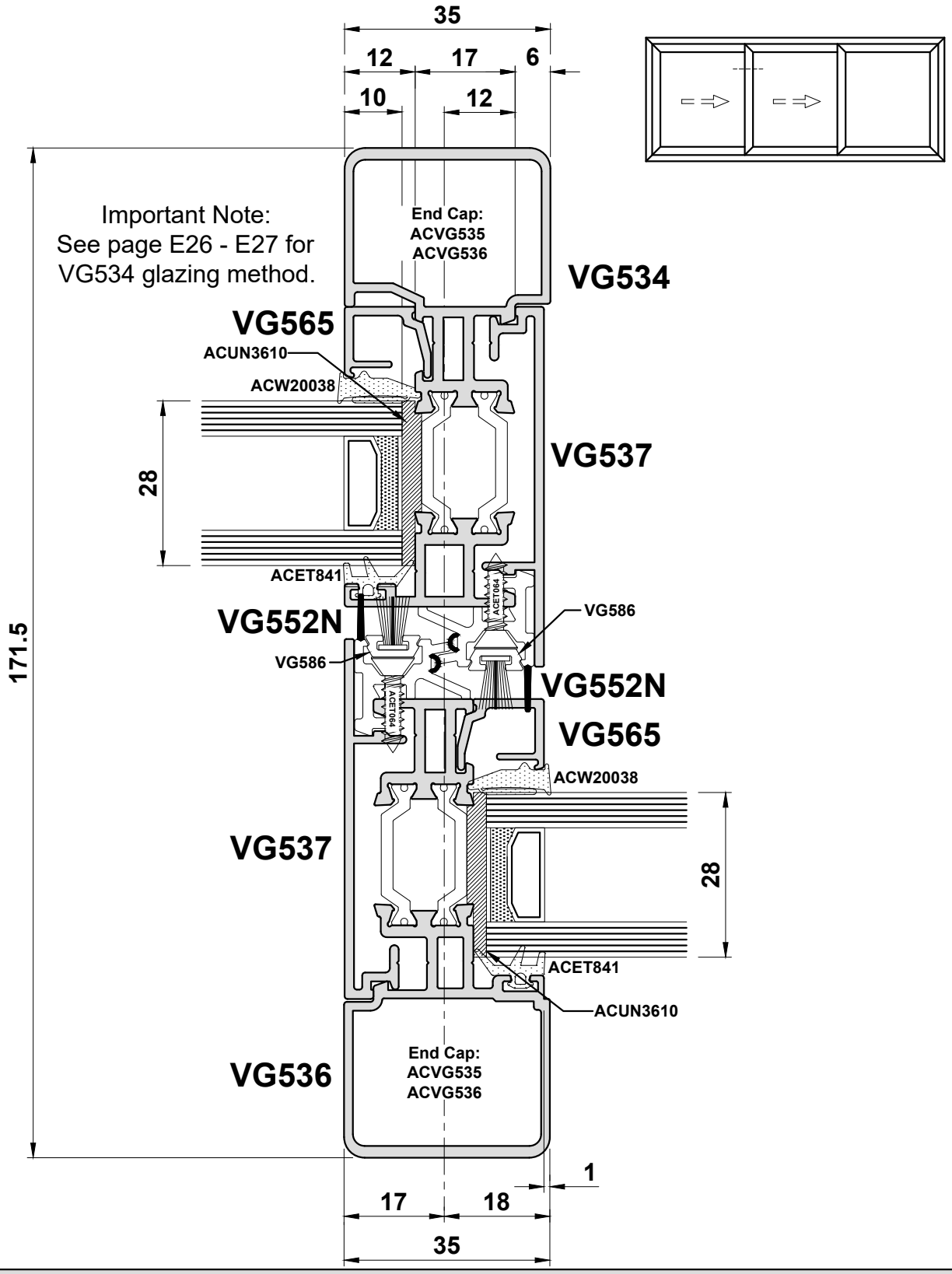

Do Not Scale From This Drawing

Detail 4I HYB

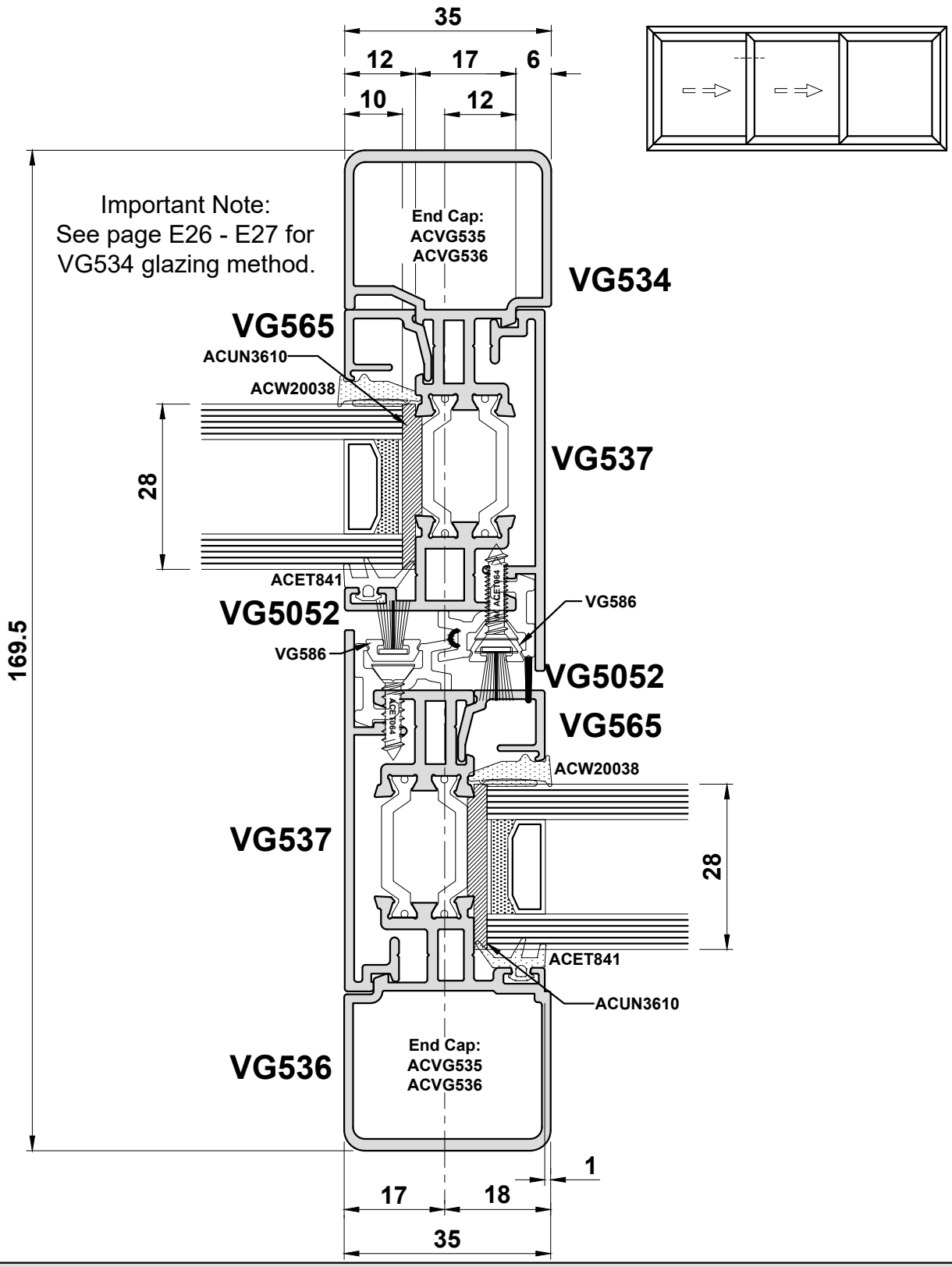

Do Not Scale From This Drawing

Detail 4J

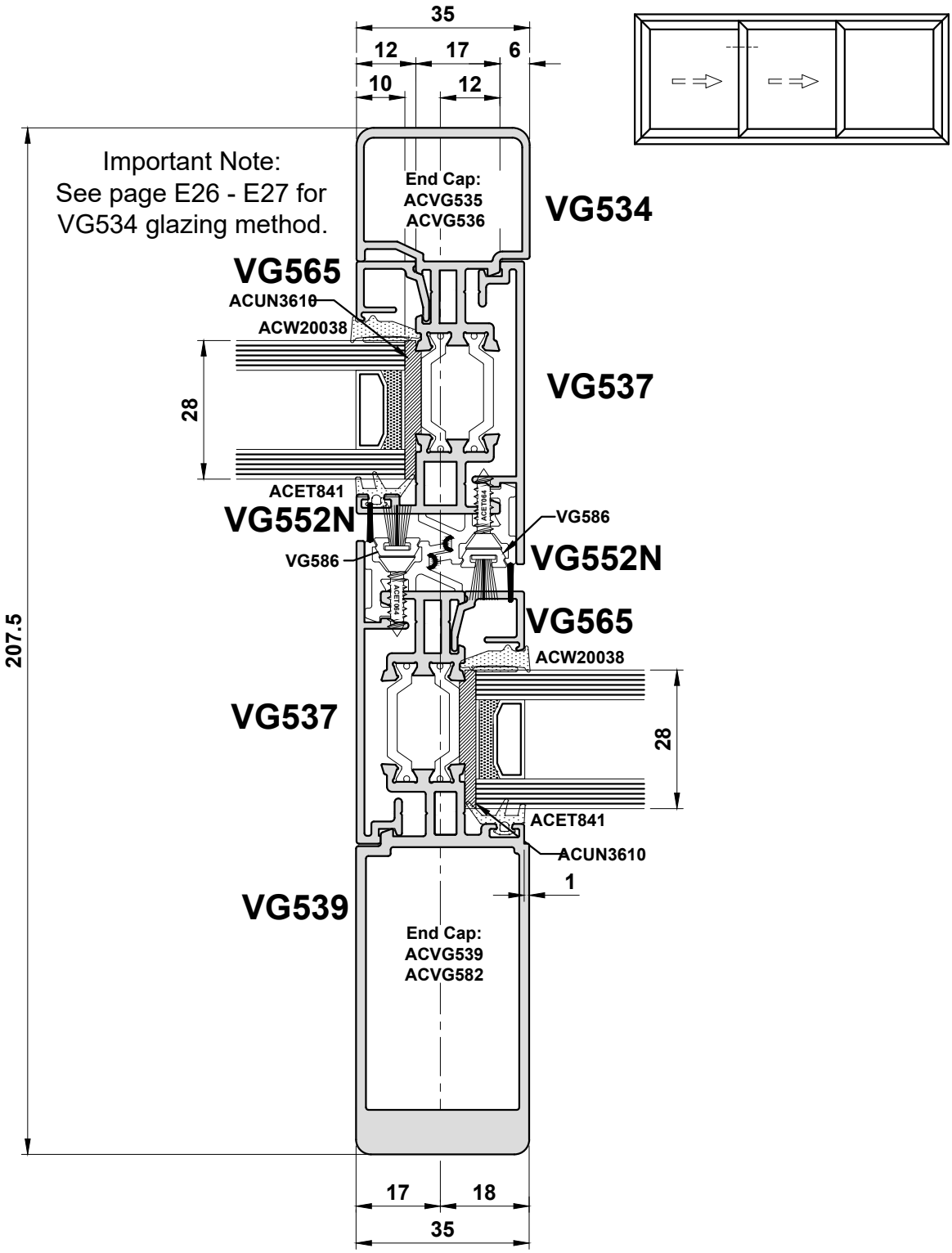

Scale 1:0.8

Do Not Scale From This Drawing

Detail 4K HYB

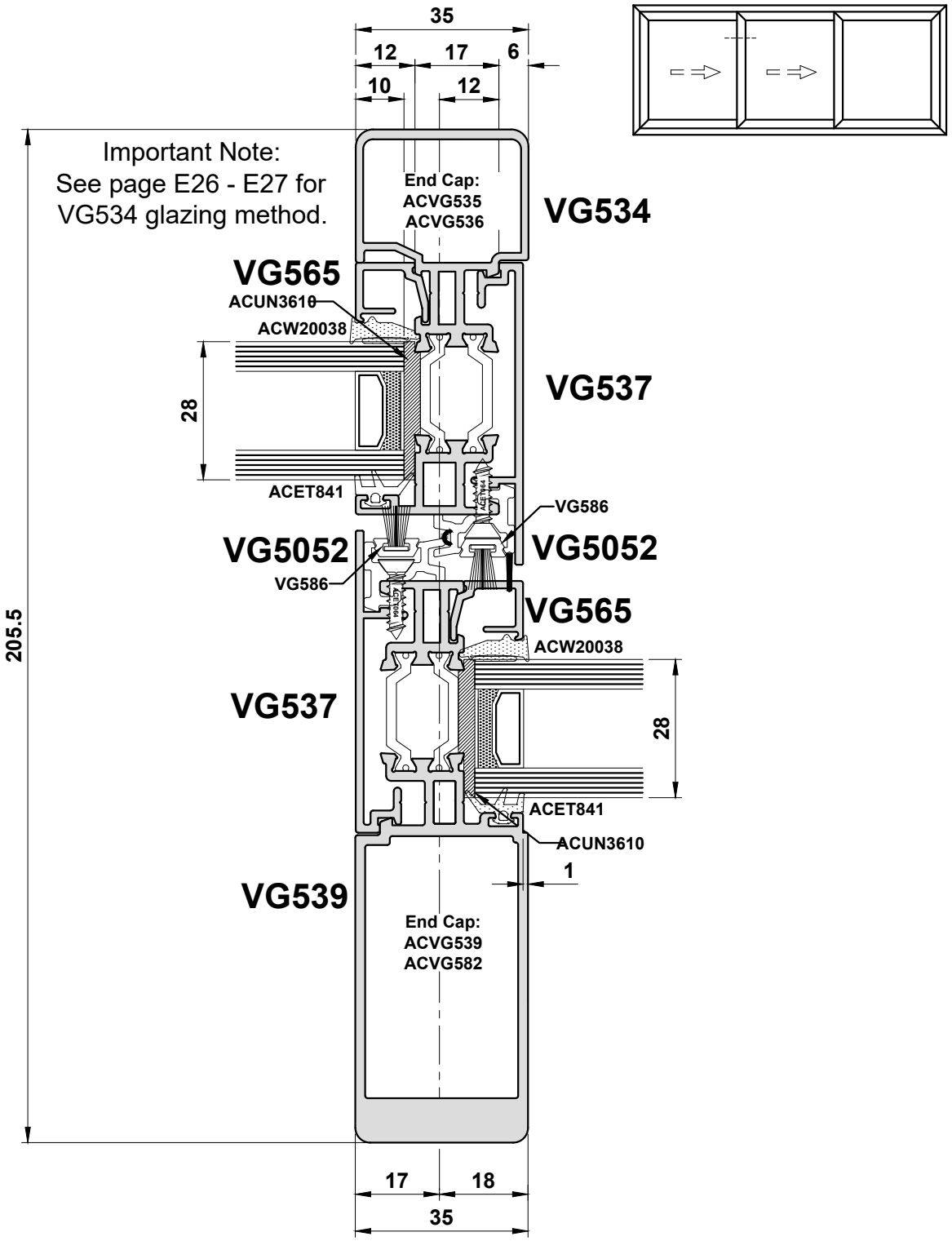

Scale 1:0.8

Do Not Scale From This Drawing

Detail 4L

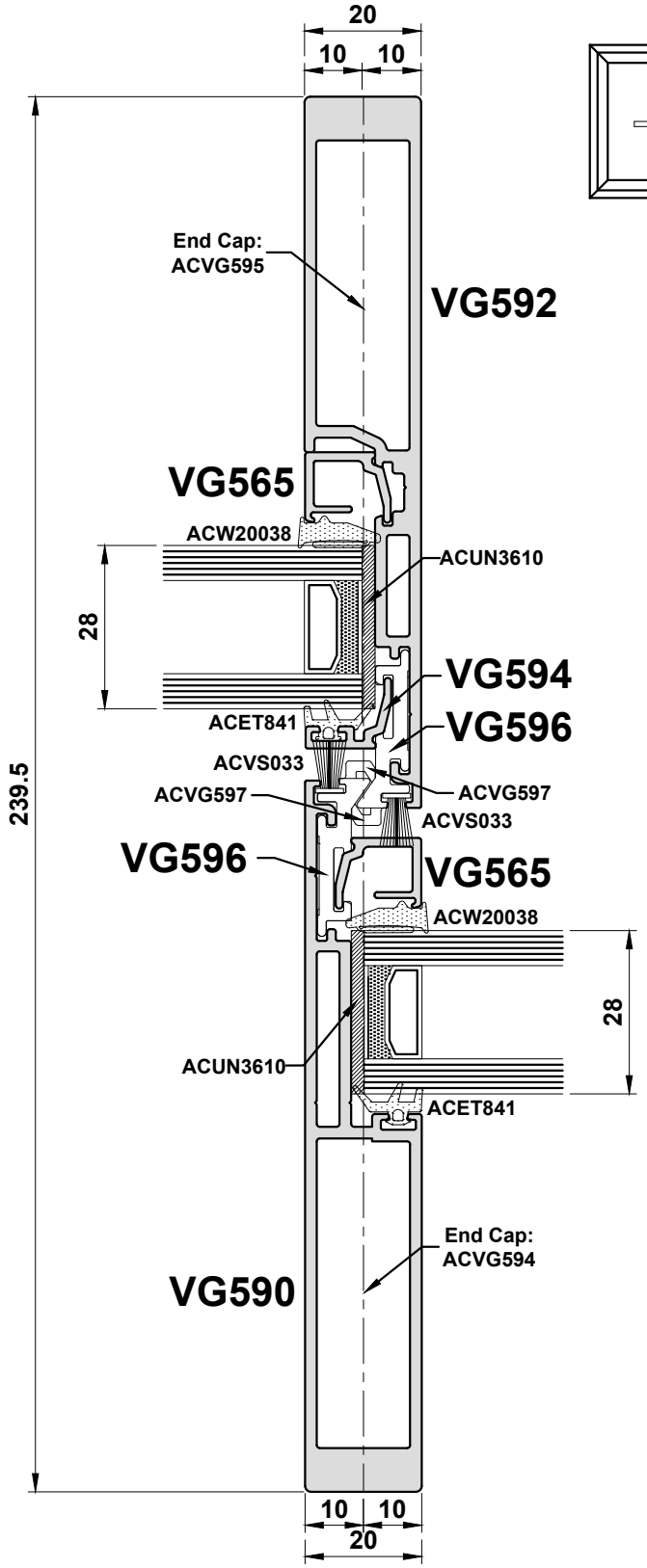

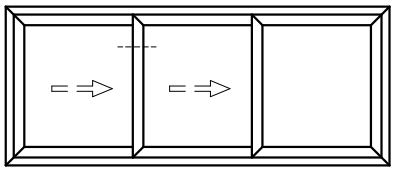

Scale 1:0.8

Do Not Scale From This Drawing

Detail 5A HYB

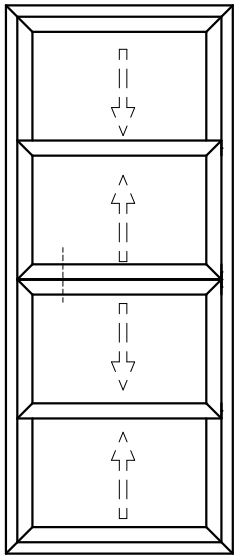

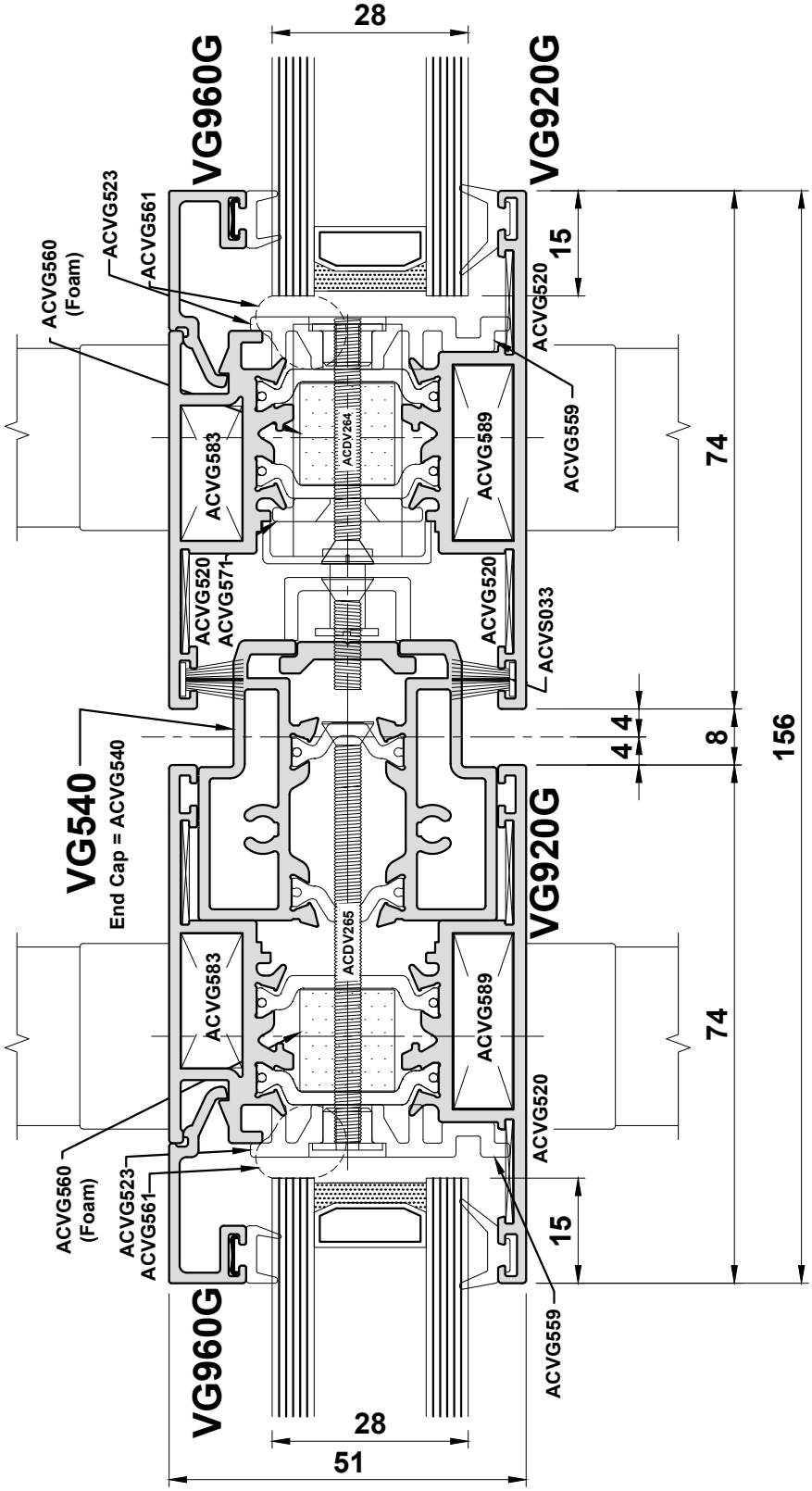

Detail is compatible as both Visoglide Plus & Visoglide Plus Hybrid.

Do Not Scale From This Drawing

Detail 5B HYB

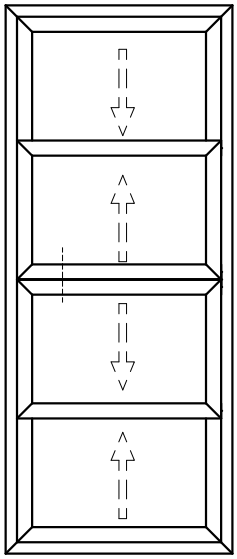

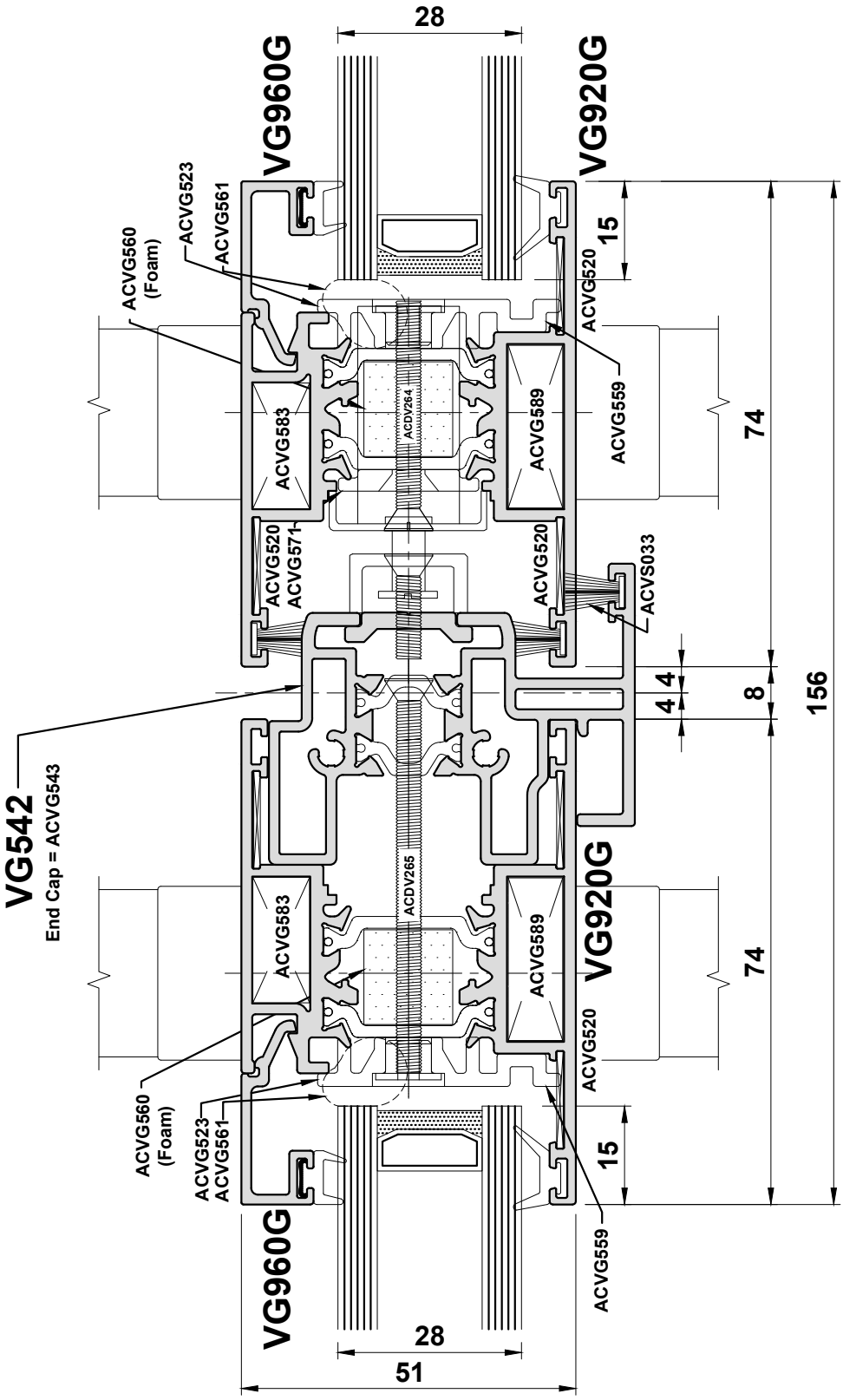

Detail is compatible as both Visoglide Plus & Visoglide Plus Hybrid.

Do Not Scale From This Drawing

Detail 5C HYB

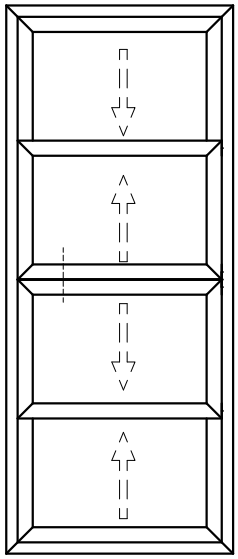

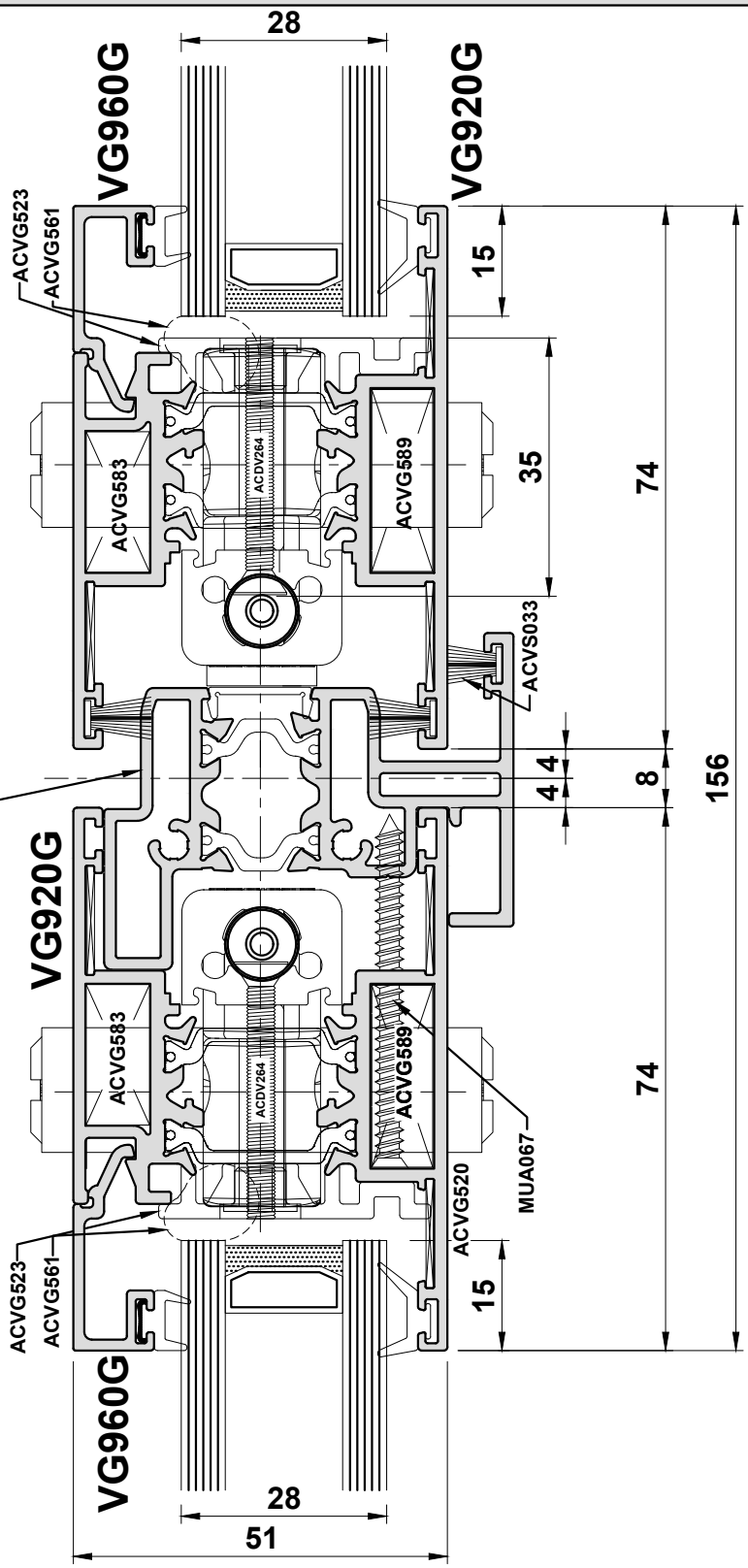

Important Note:
VG549 can only be used with BT Lock

Detail is compatible as both Visoglide Plus & Visoglide Plus Hybrid.

Do Not Scale From This Drawing

Detail 5D

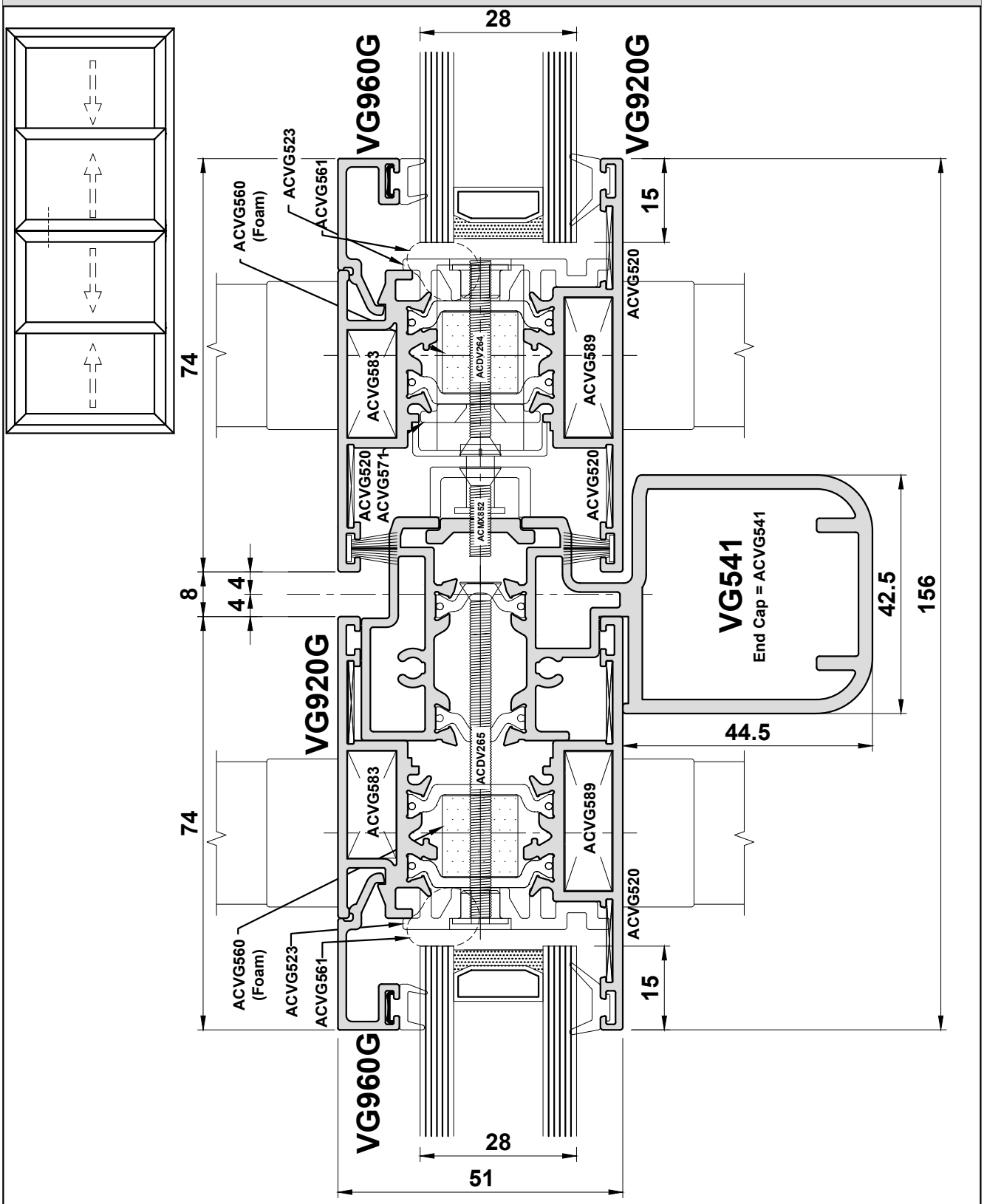

Do Not Scale From This Drawing

Detail 5E

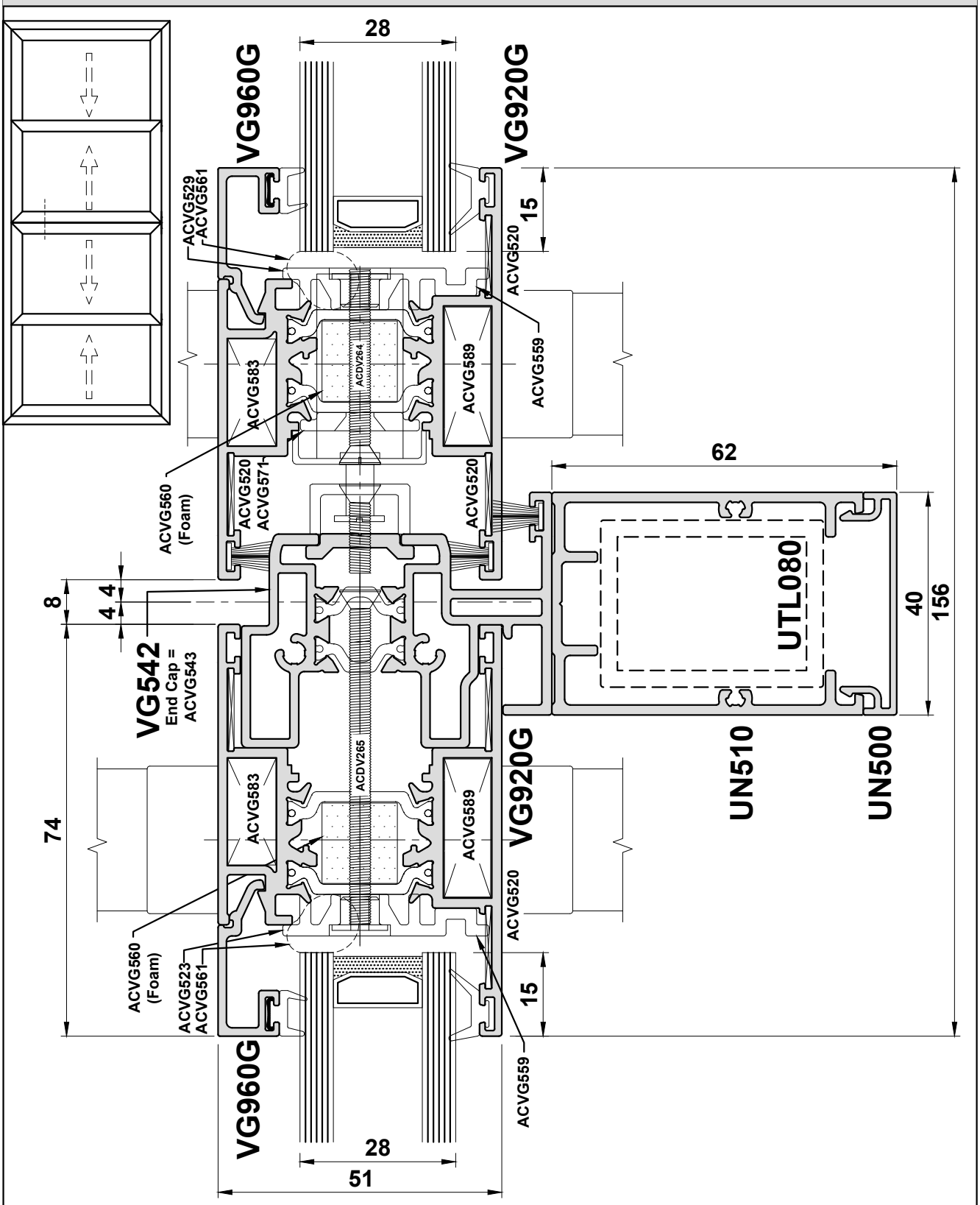

Do Not Scale From This Drawing

Detail 5F

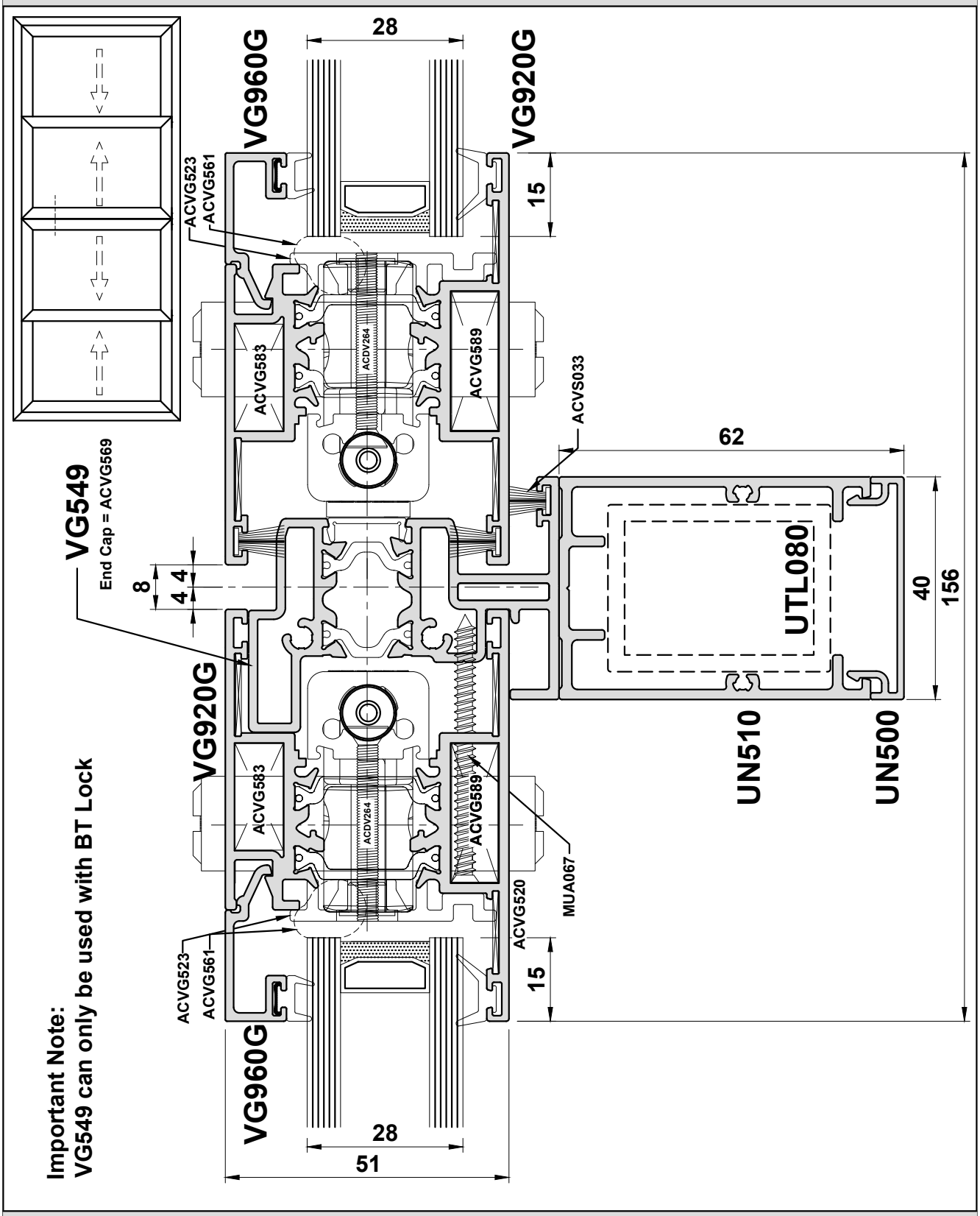

Do Not Scale From This Drawing

Detail 5G

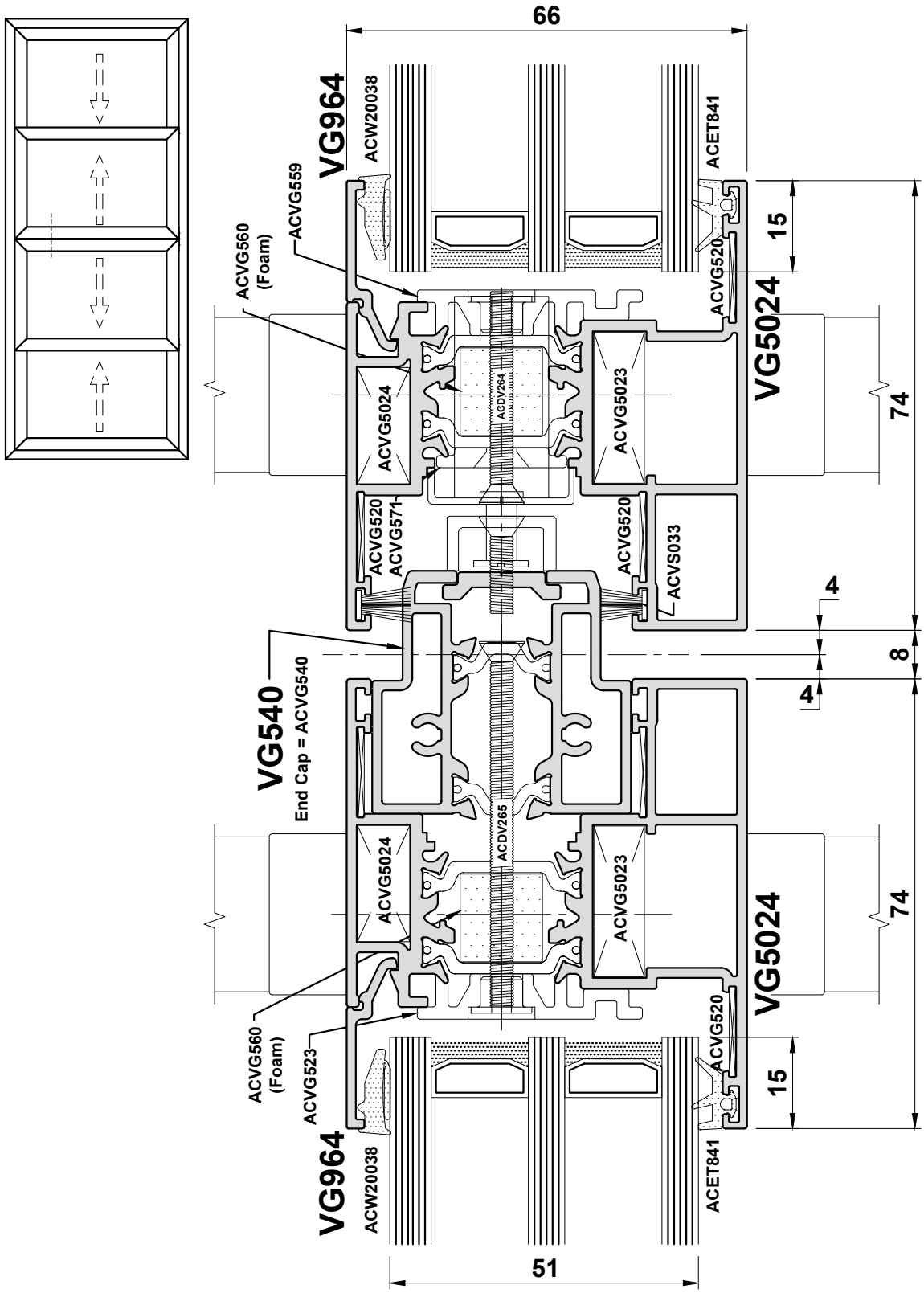

Do Not Scale From This Drawing

Detail 5H

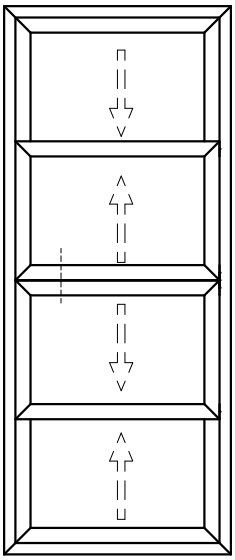

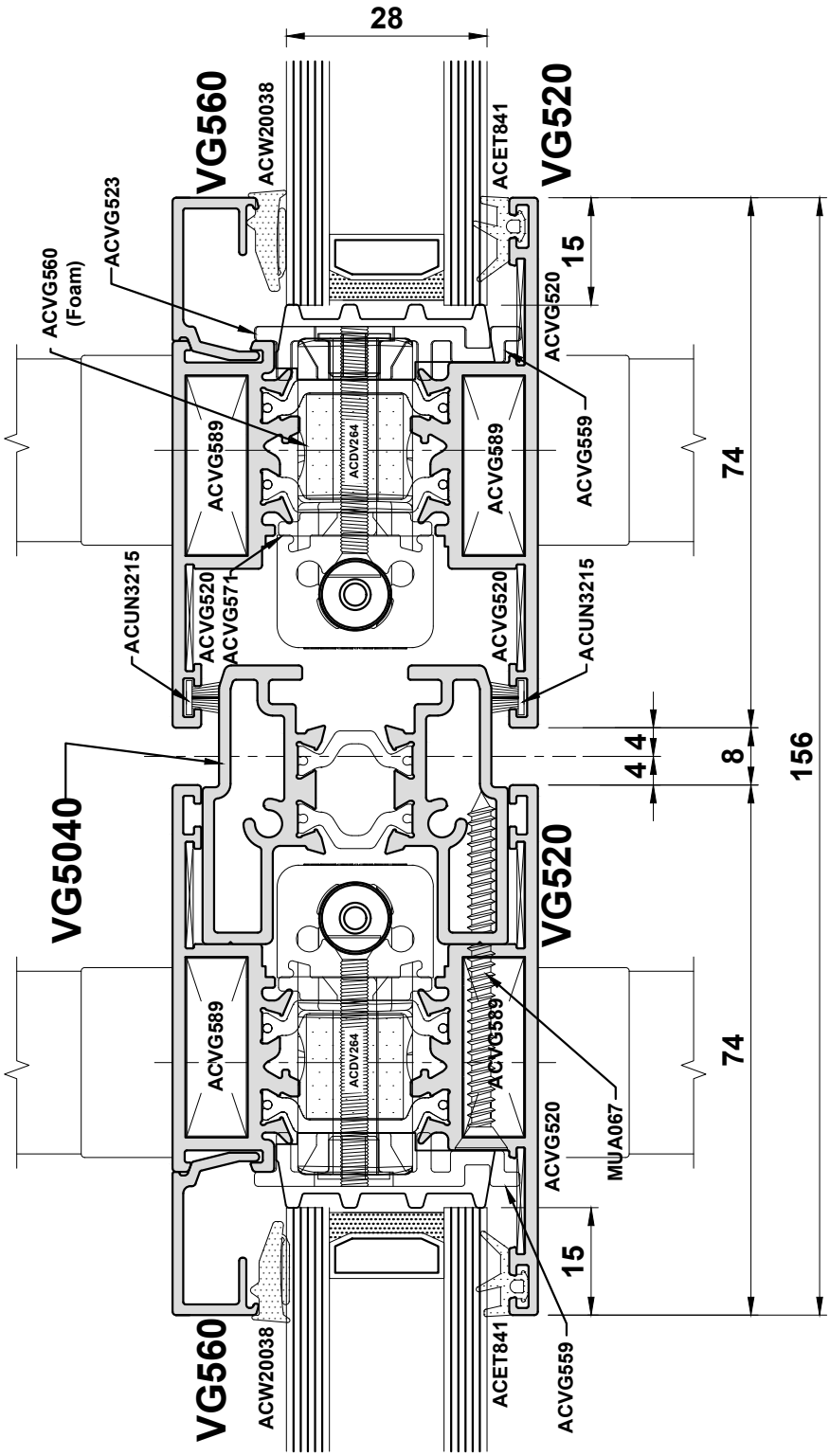

Do Not Scale From This Drawing

Detail 5J

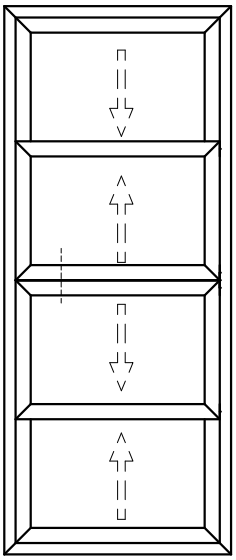

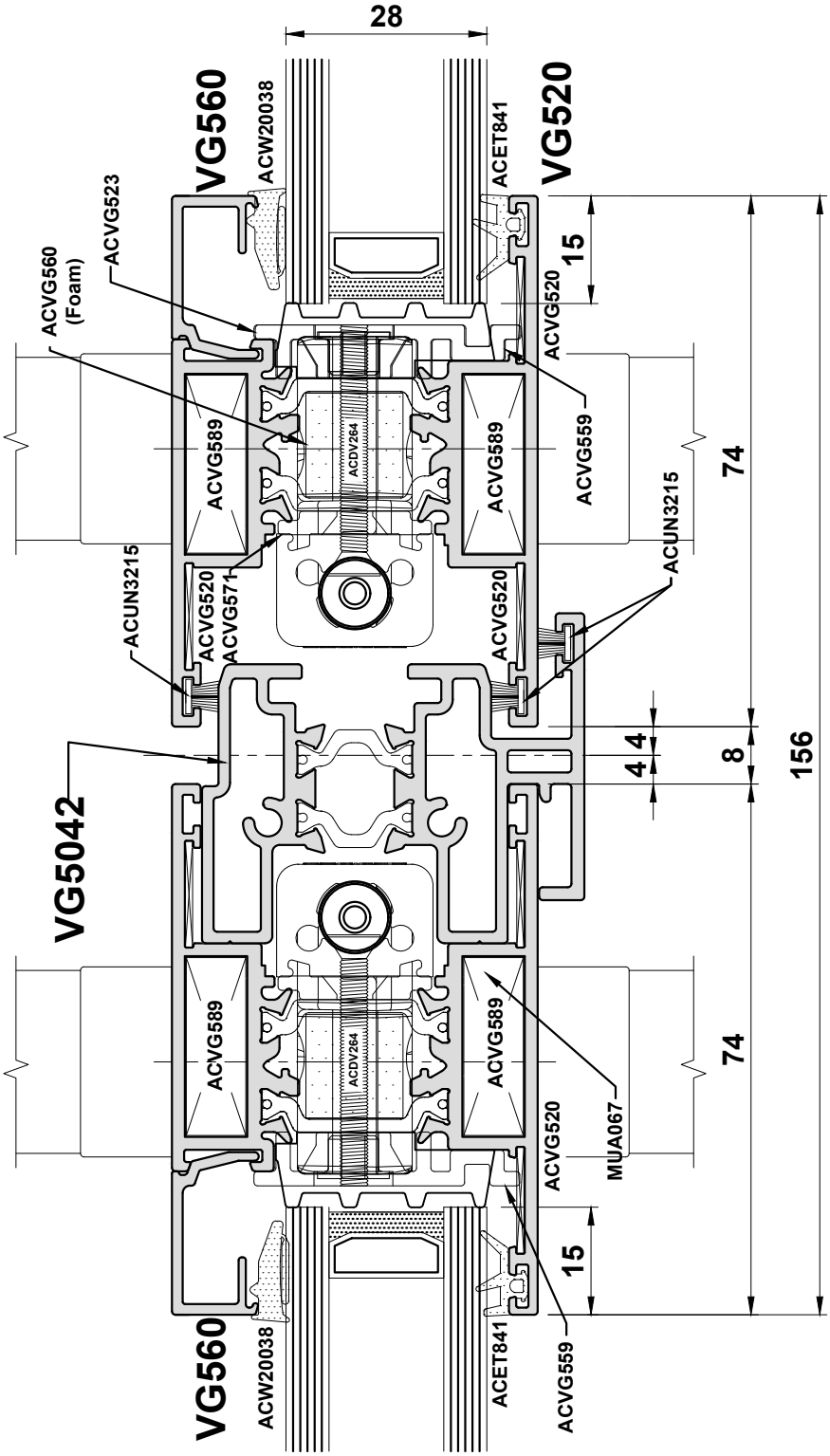

Do Not Scale From This Drawing

Detail 5K

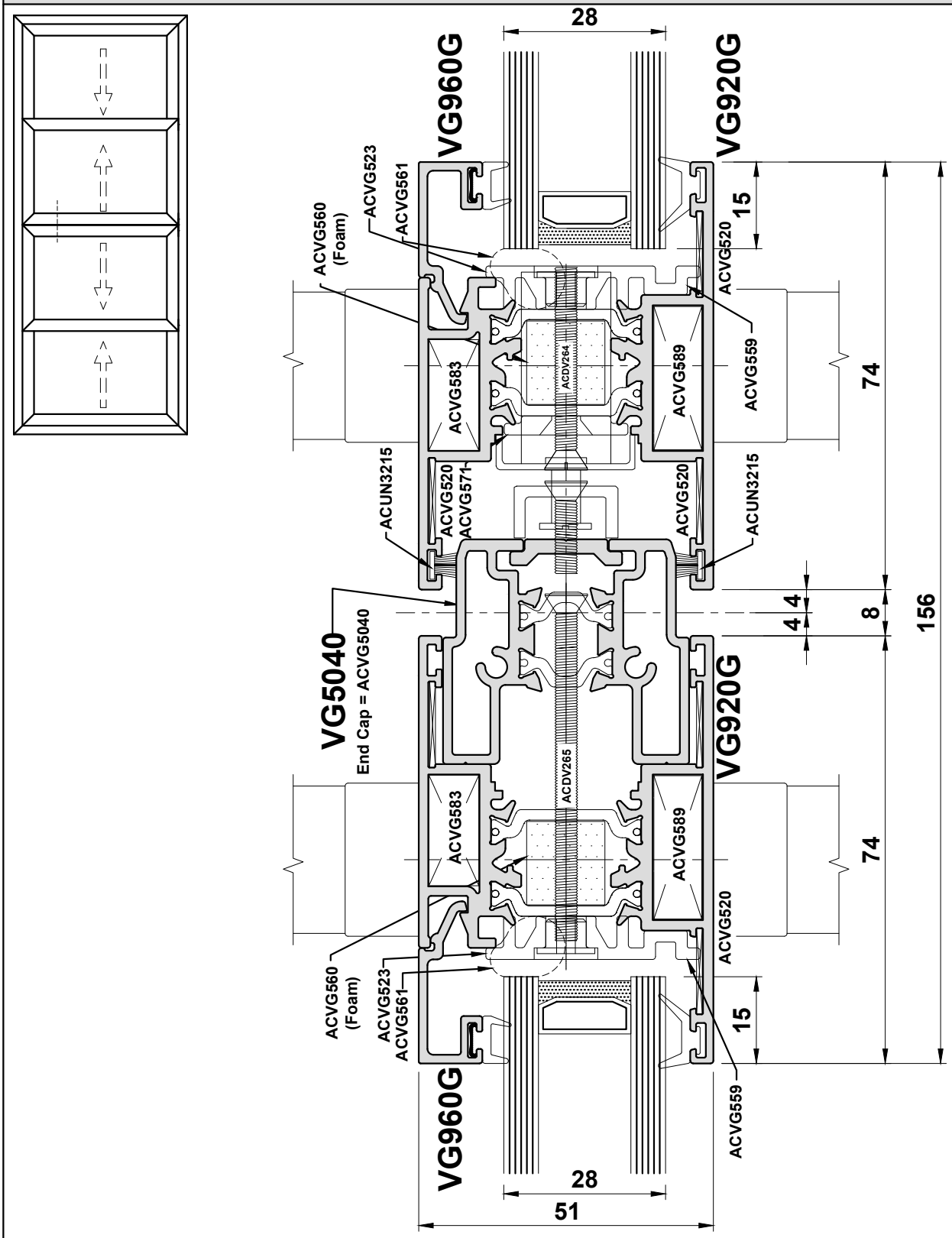

Do Not Scale From This Drawing

Detail 5L

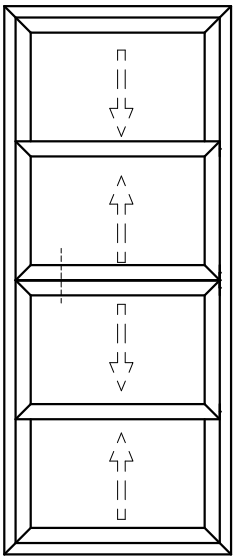

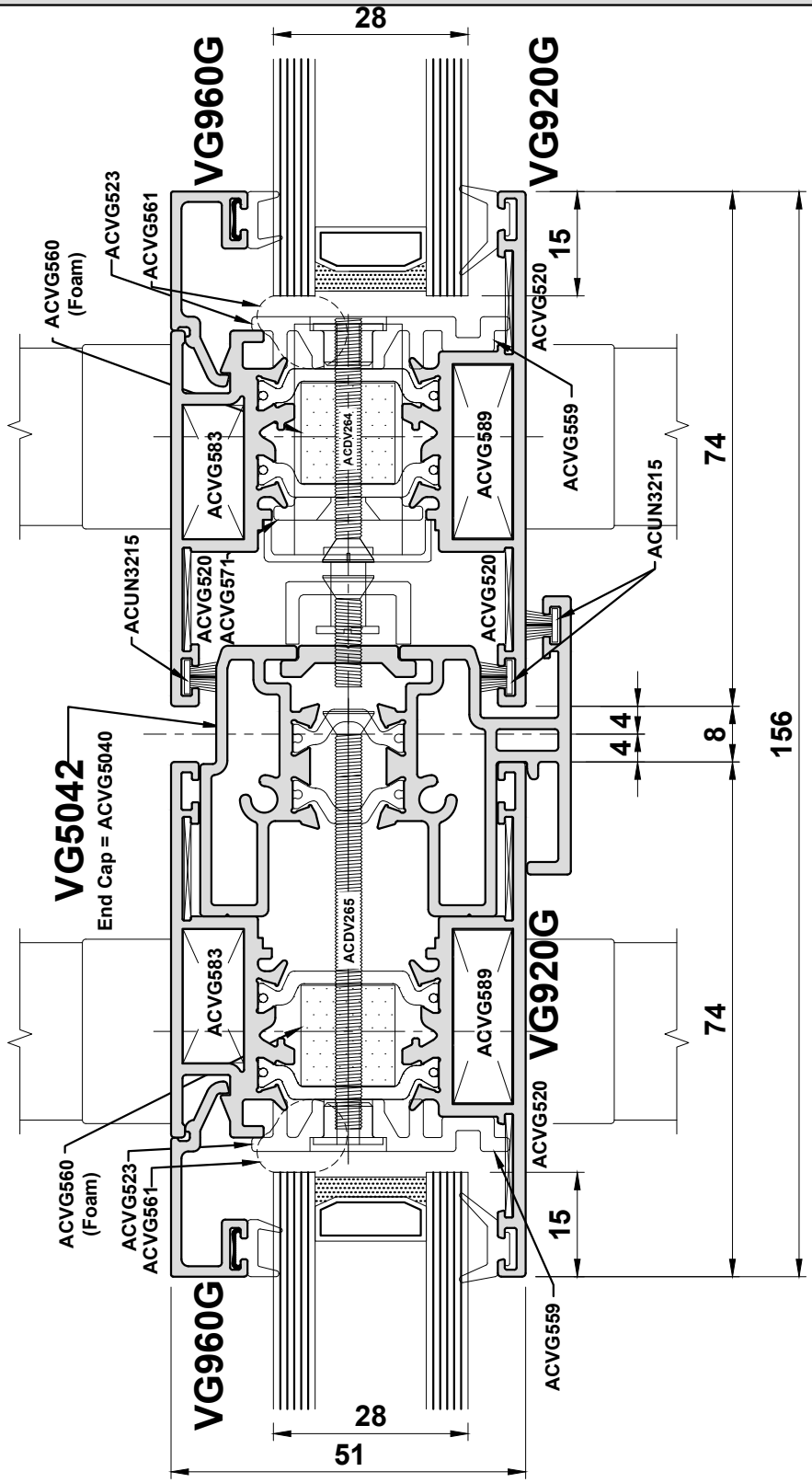

Do Not Scale From This Drawing

Detail 5M

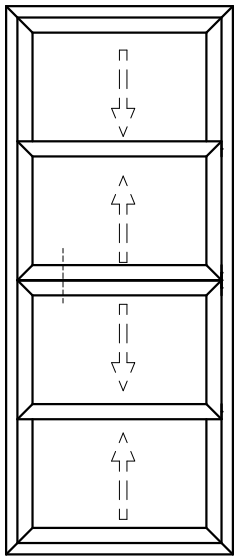

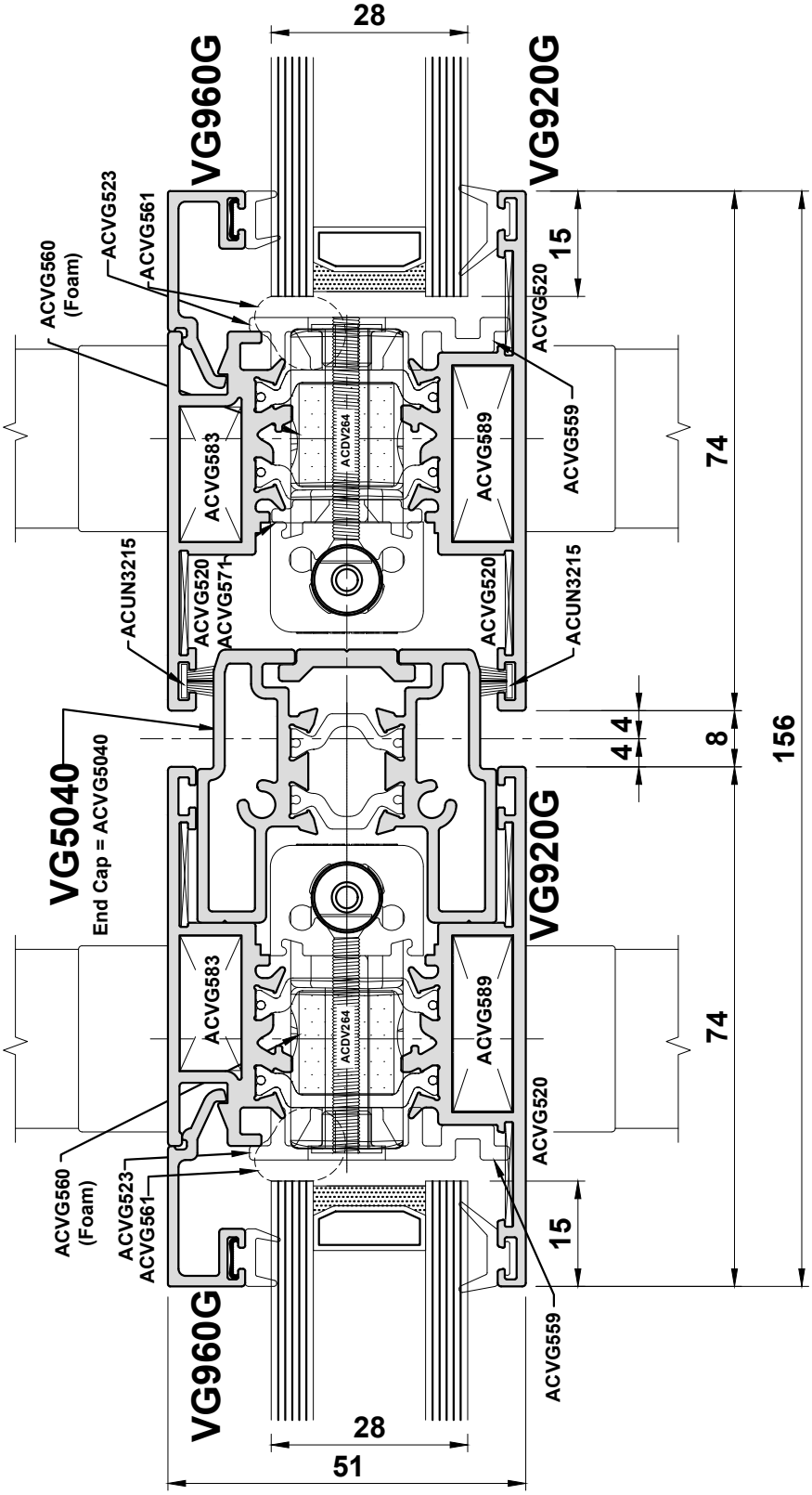

Do Not Scale From This Drawing

Detail 5N

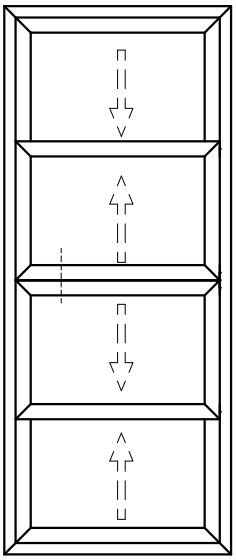

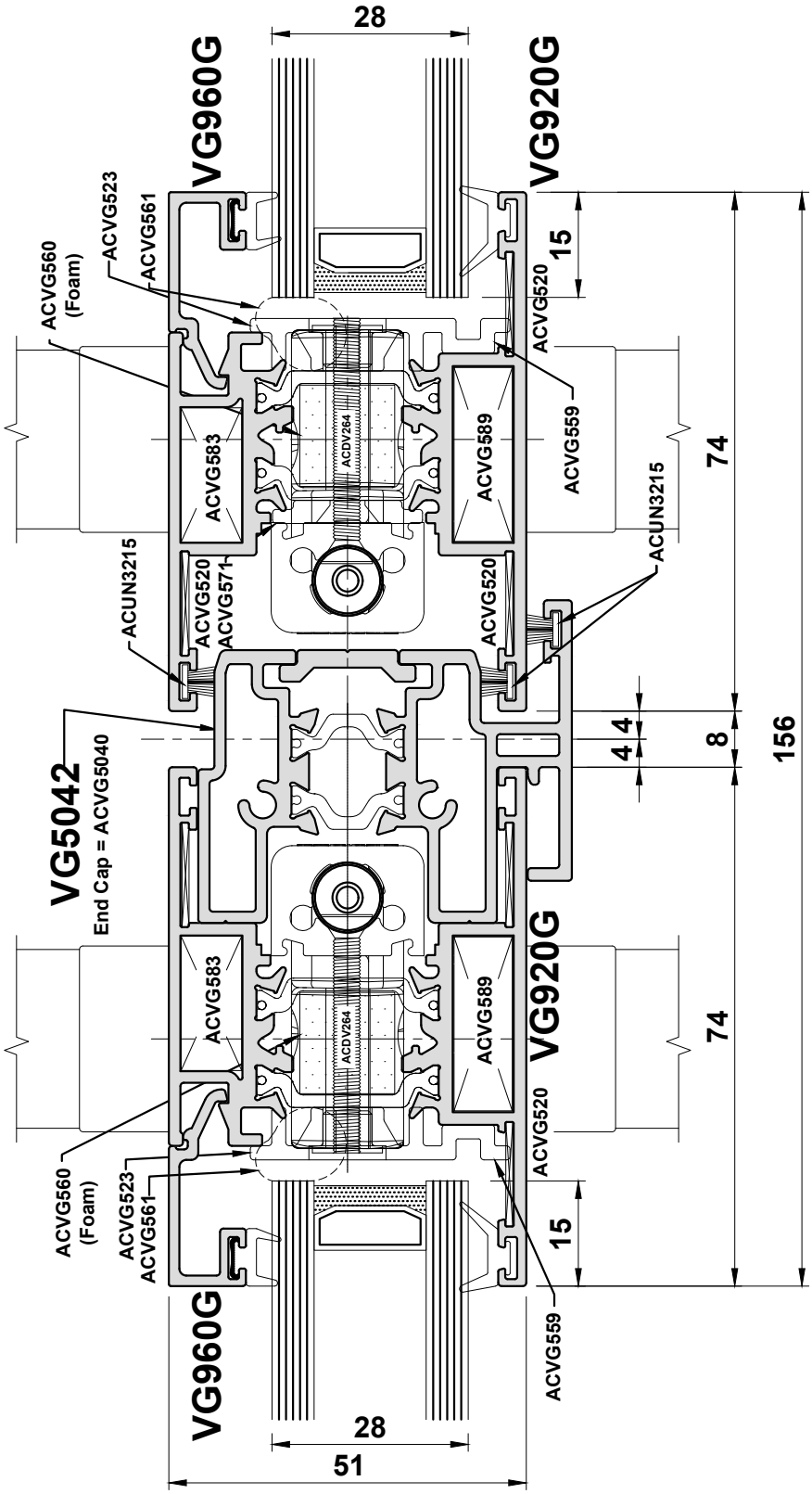

Do Not Scale From This Drawing

Visoglide Plus

Detail 5P

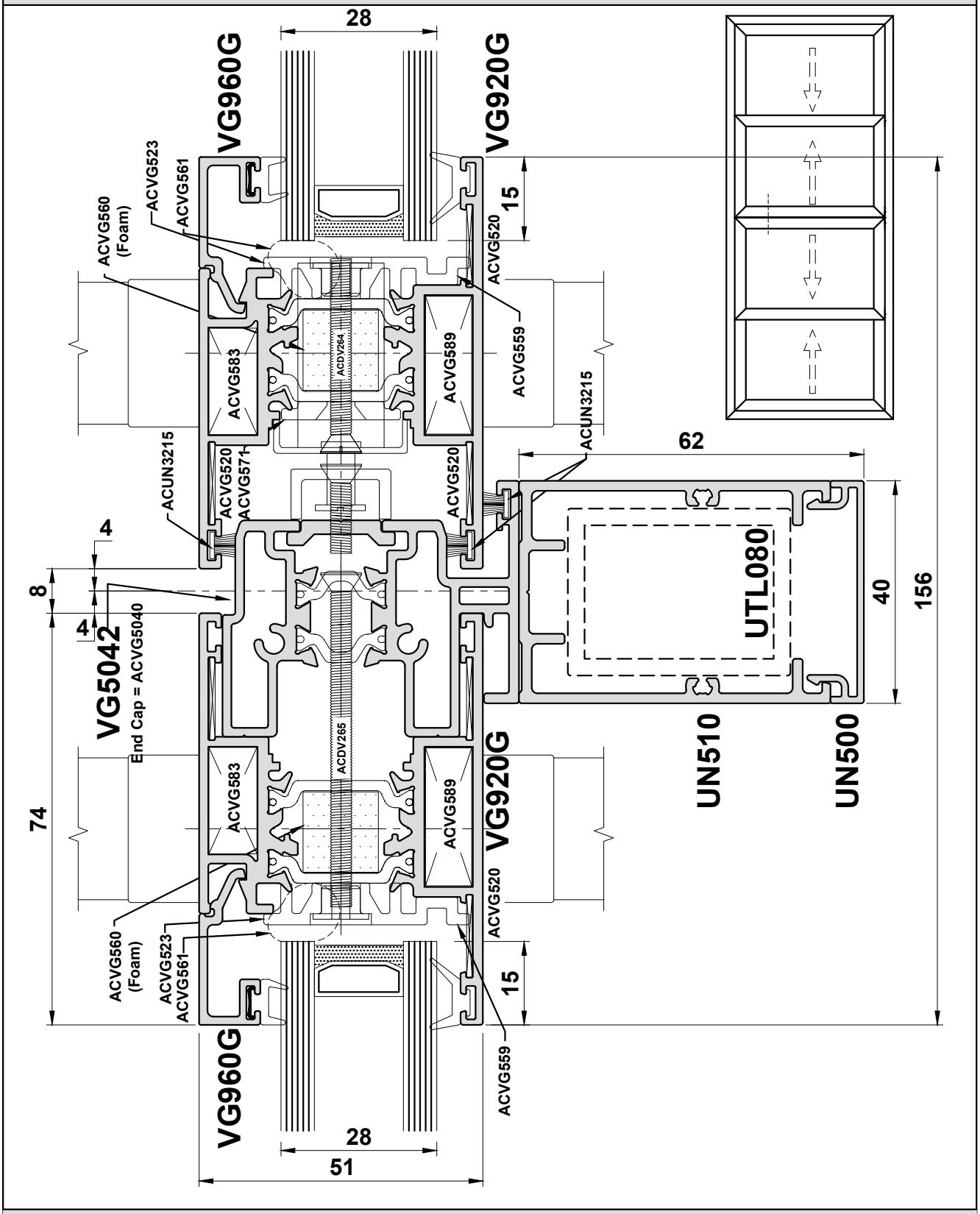

Do Not Scale From This Drawing

Detail 5Q

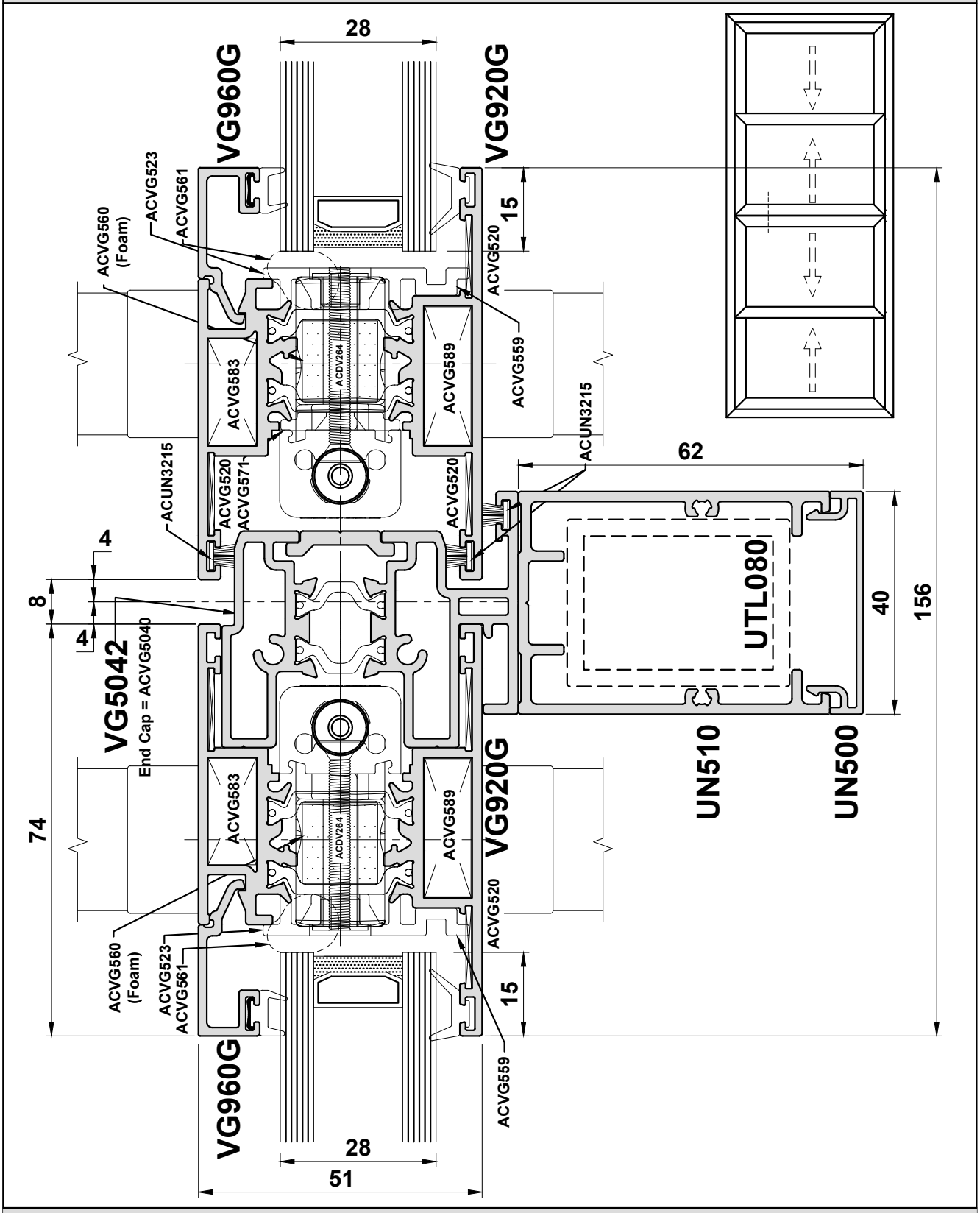

Do Not Scale From This Drawing

Detail 6A

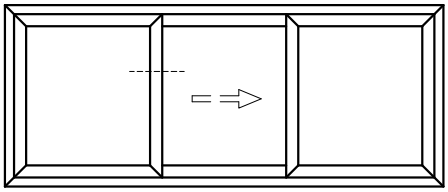

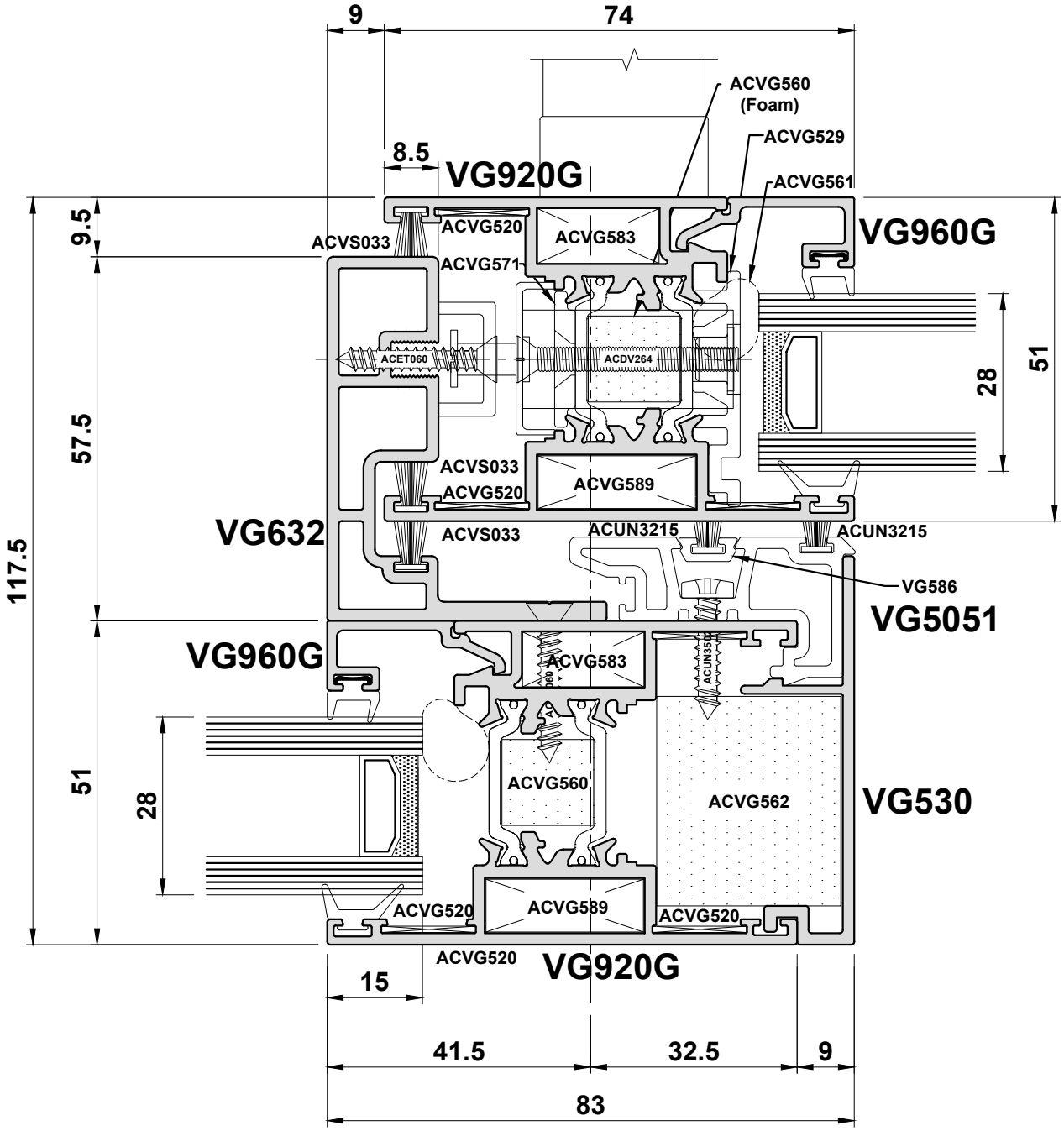

Do Not Scale From This Drawing

Detail 6B

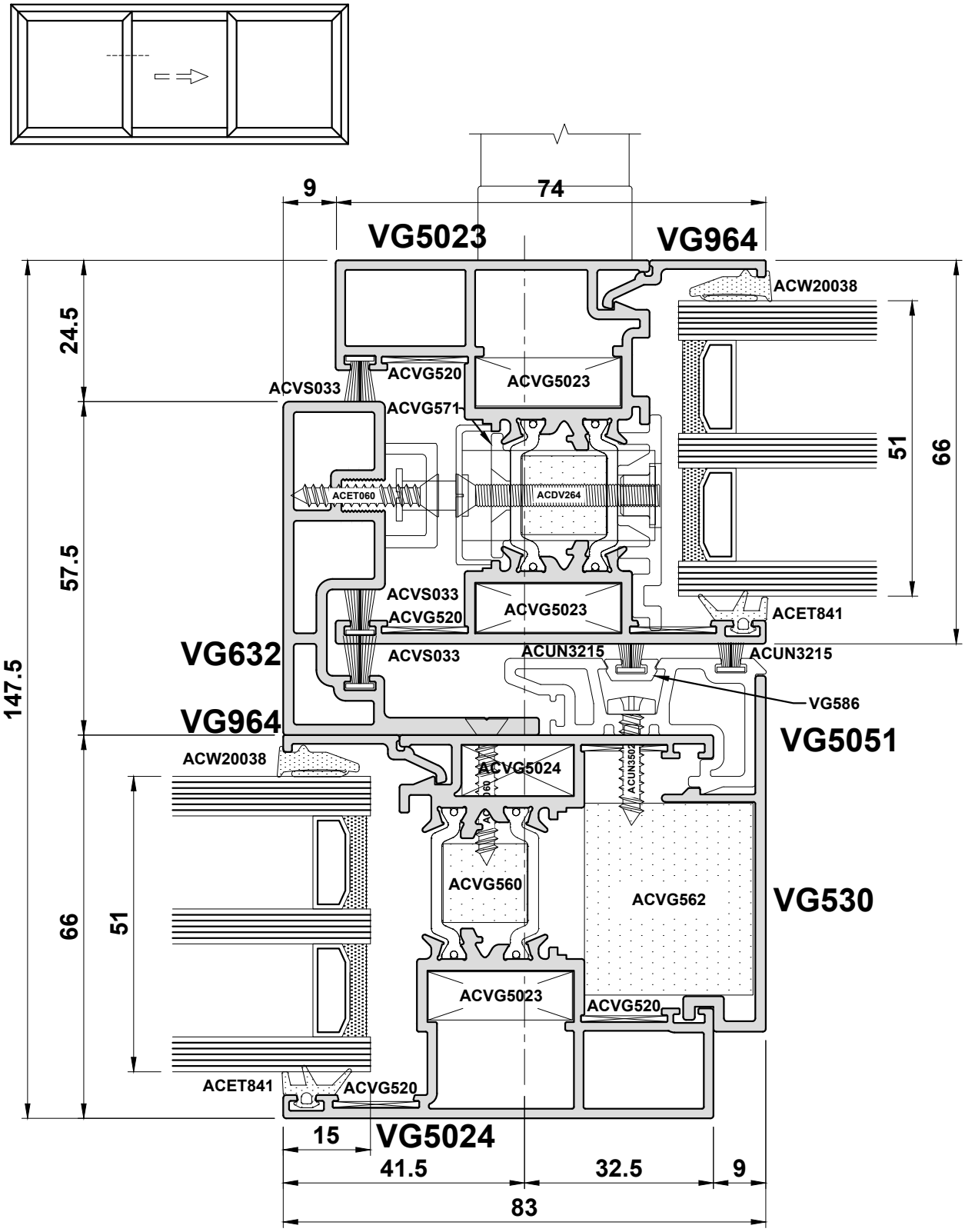

Do Not Scale From This Drawing

Detail 7A

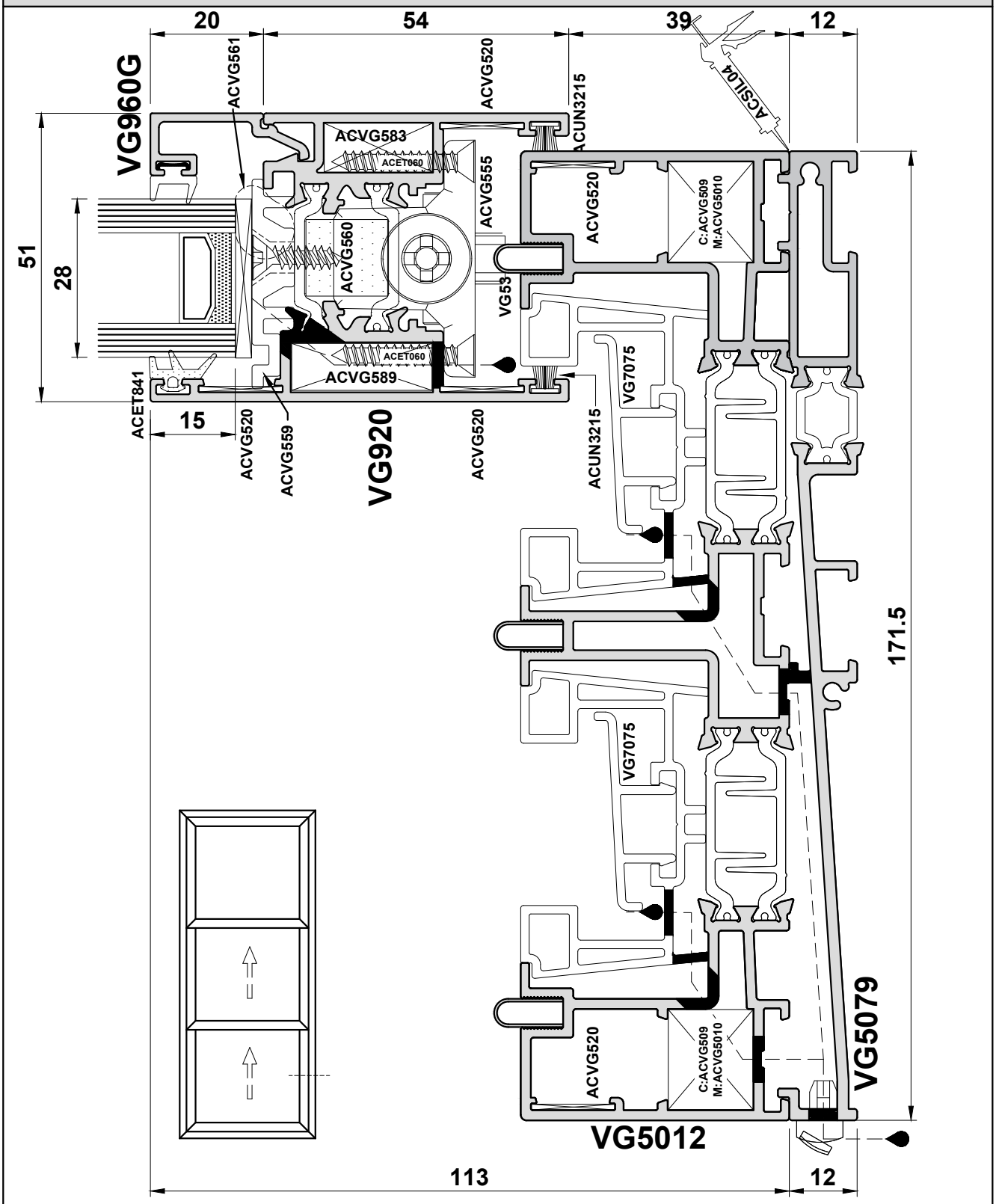

Do Not Scale From This Drawing

Detail 7B

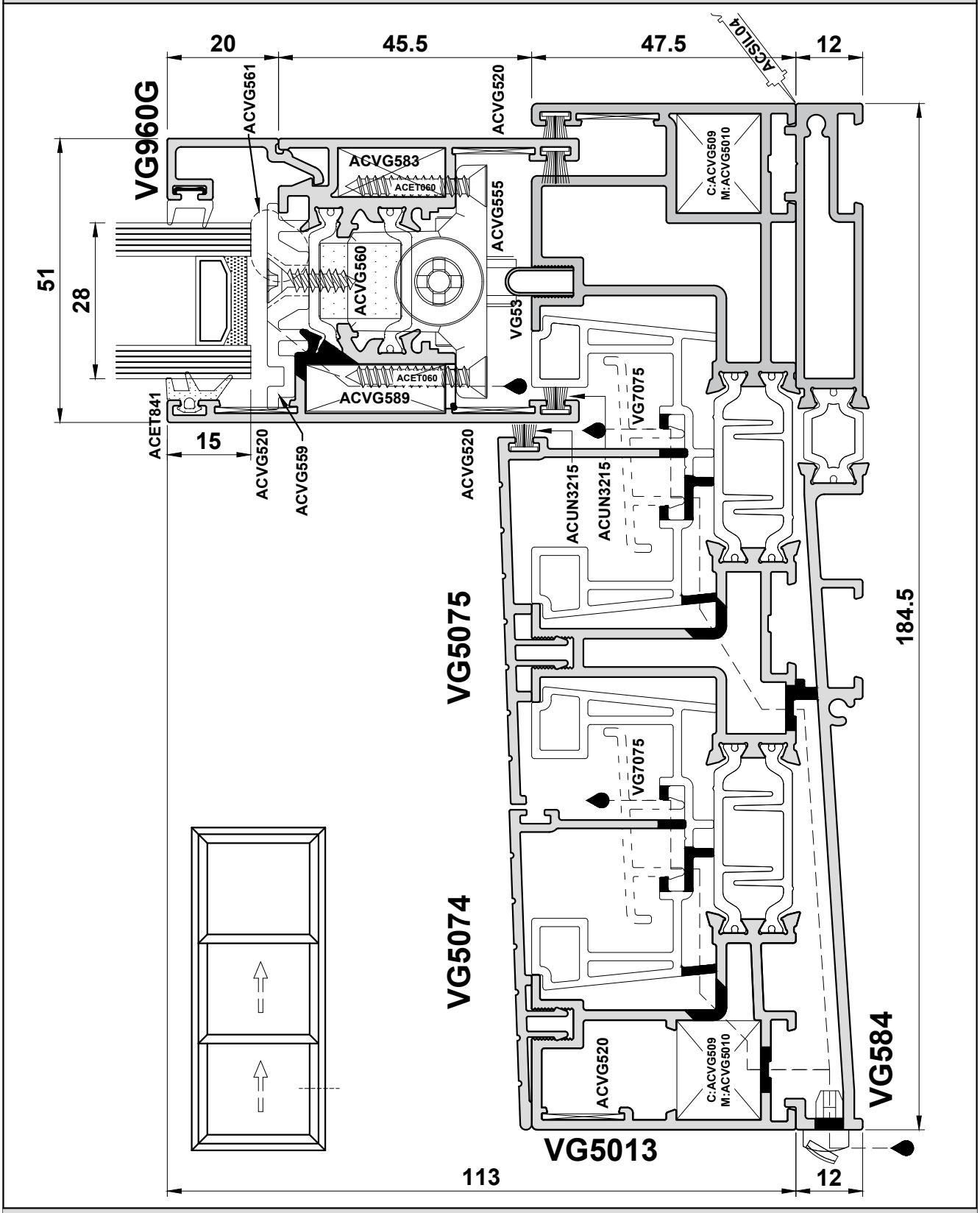

Do Not Scale From This Drawing

Detail 7C HYB

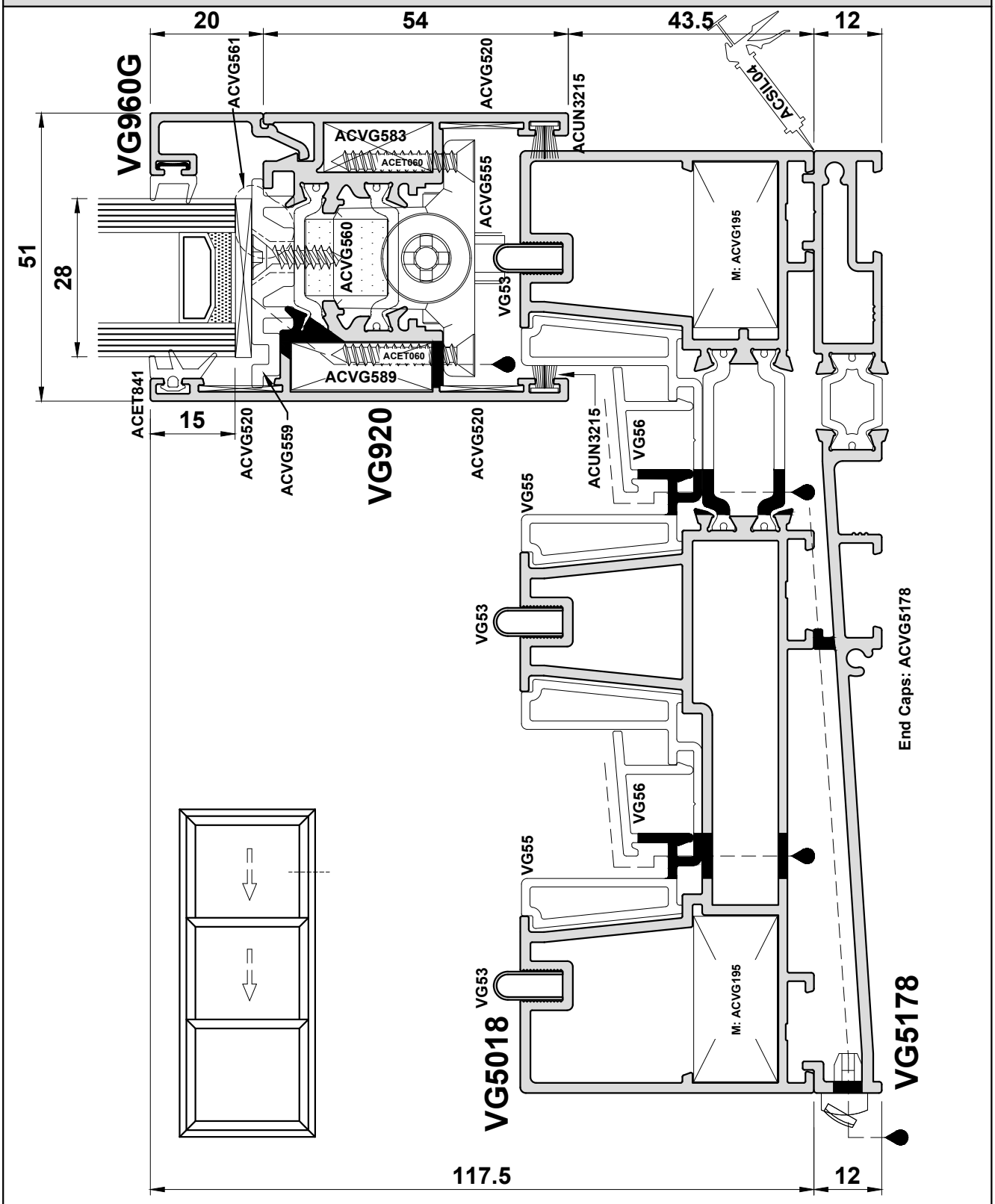

Do Not Scale From This Drawing

Detail 7D HYB

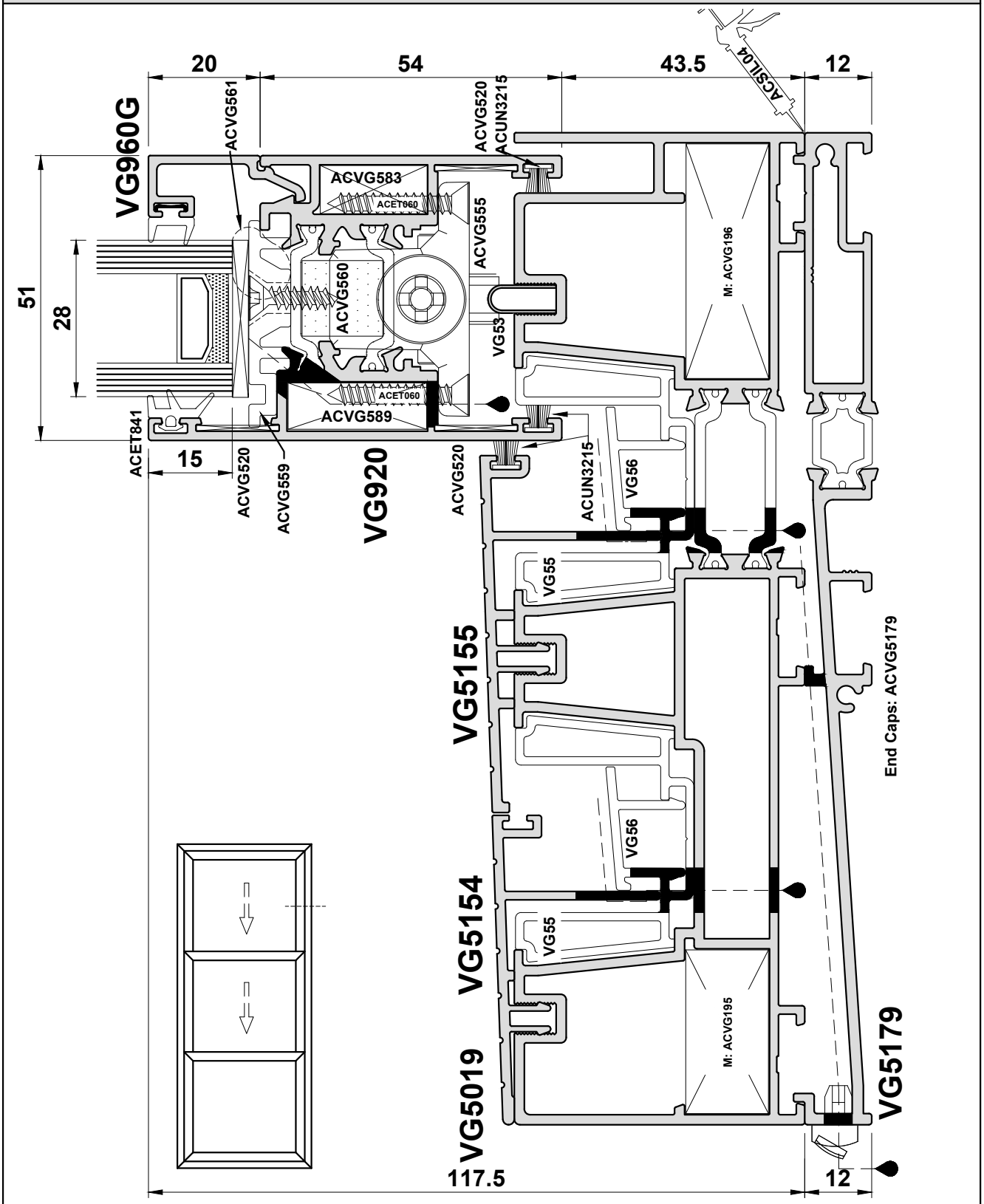

Do Not Scale From This Drawing

Visoglide Plus

Detail 8A

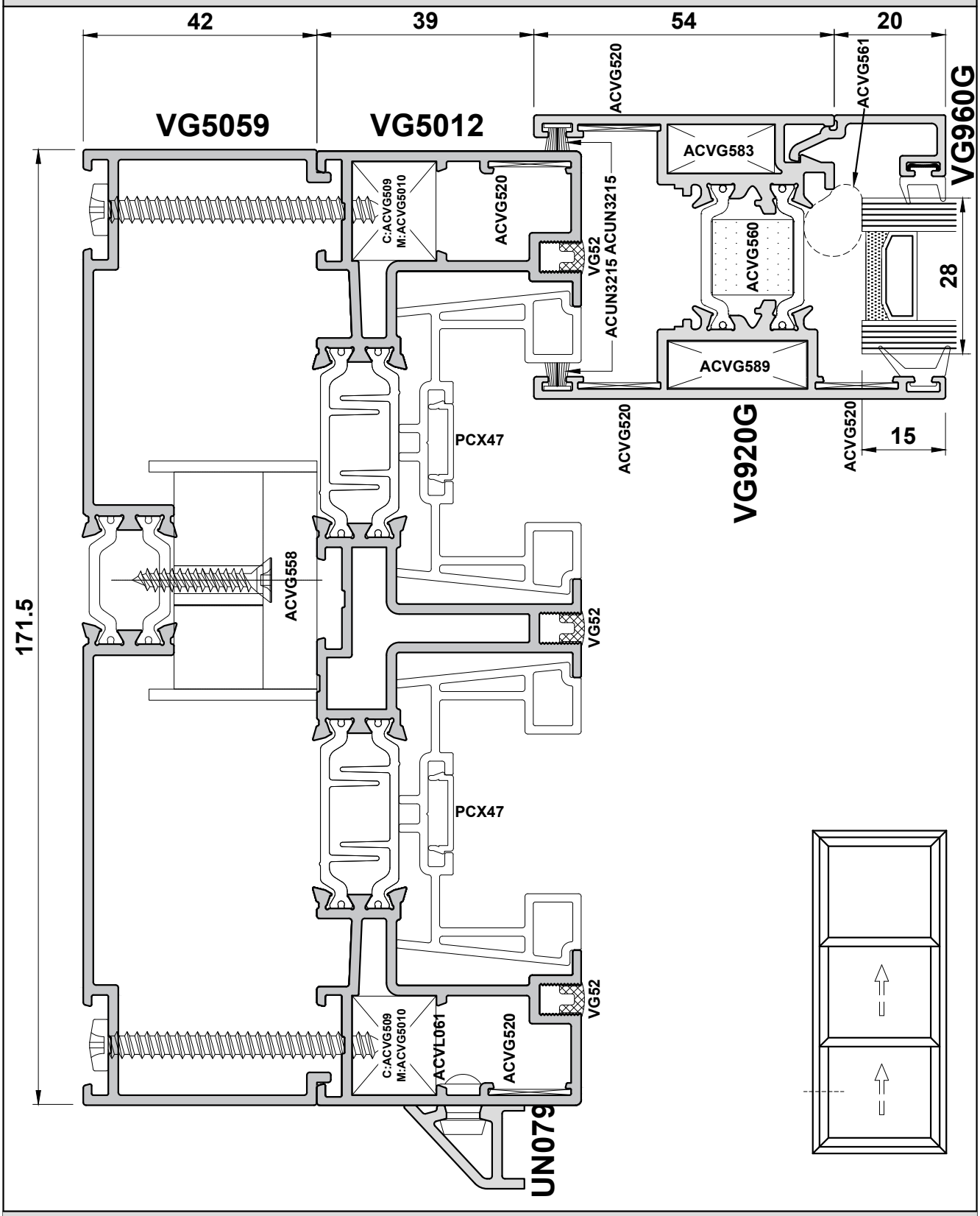

Do Not Scale From This Drawing

Detail 8B

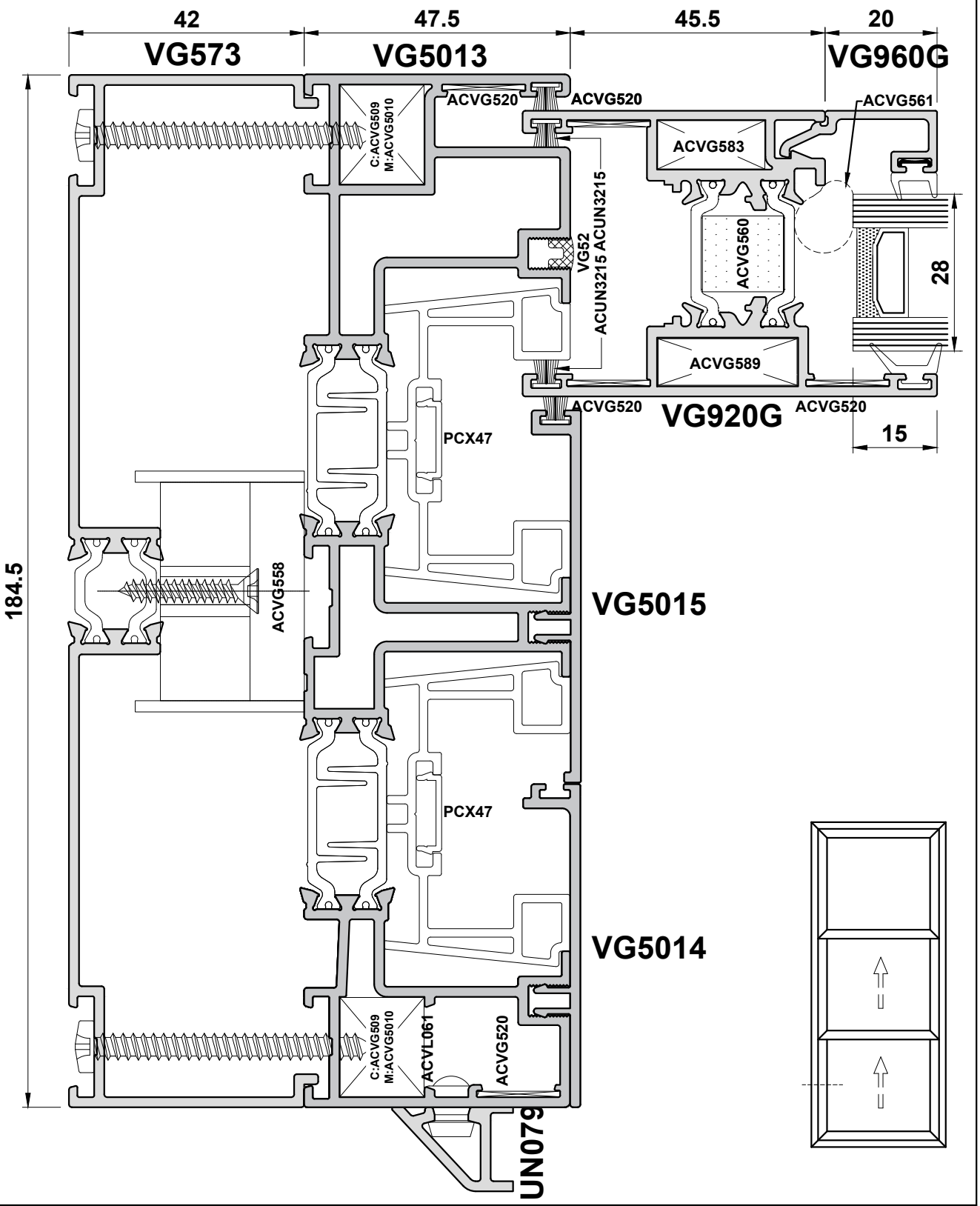

Do Not Scale From This Drawing

Detail 8C HYB

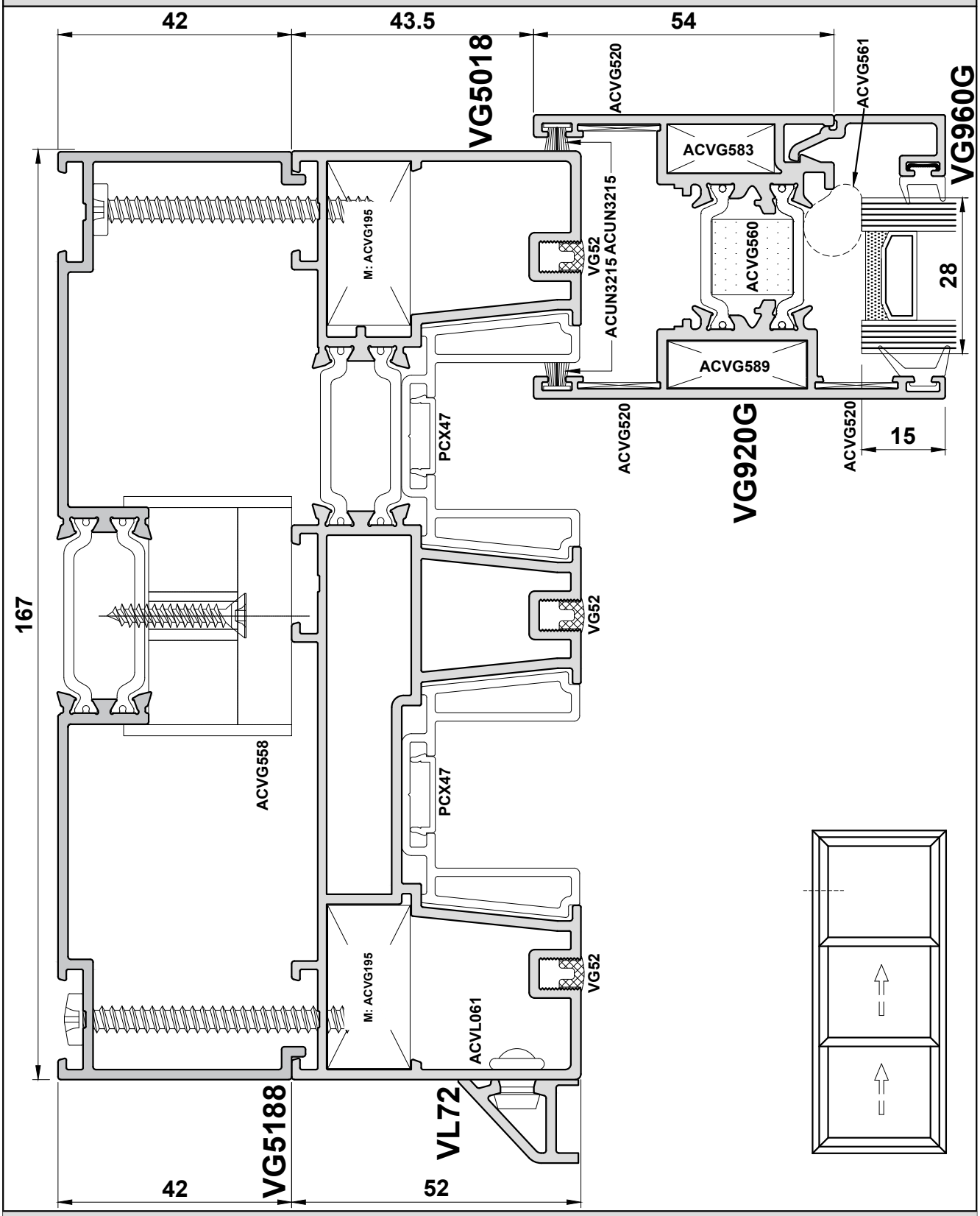

Do Not Scale From This Drawing

Detail 8D HYB

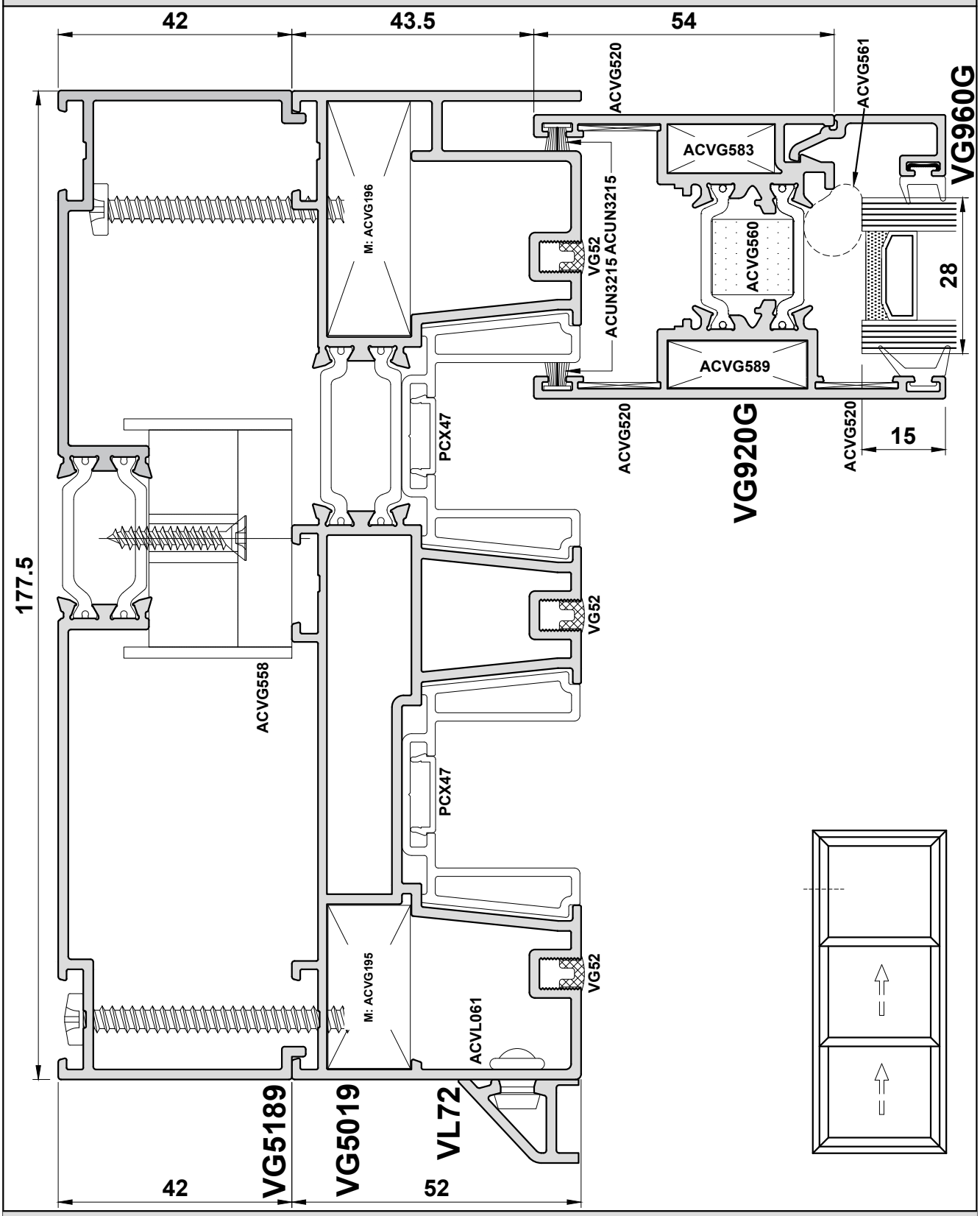

Do Not Scale From This Drawing

Detail 9A

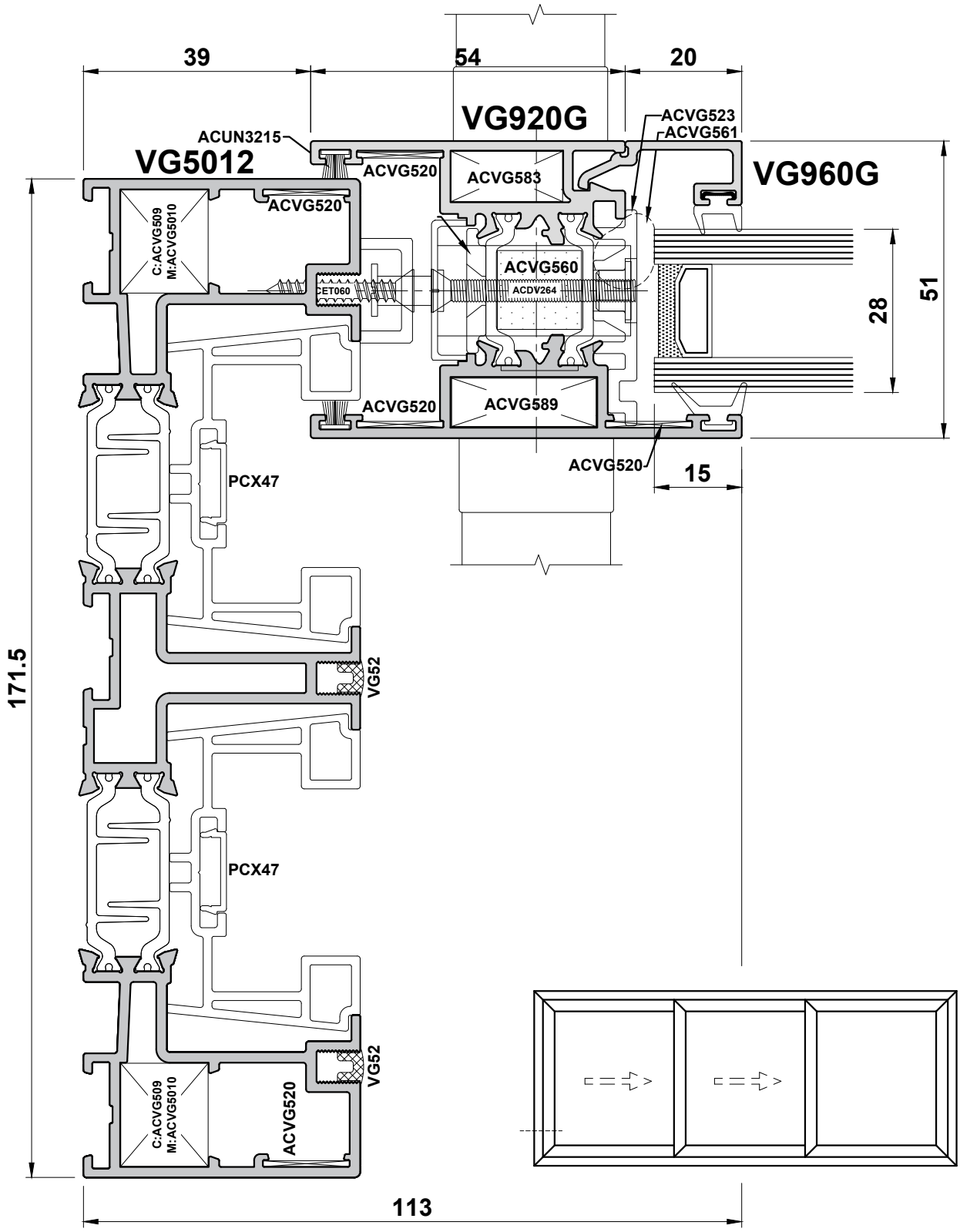

Do Not Scale From This Drawing

Detail 9B

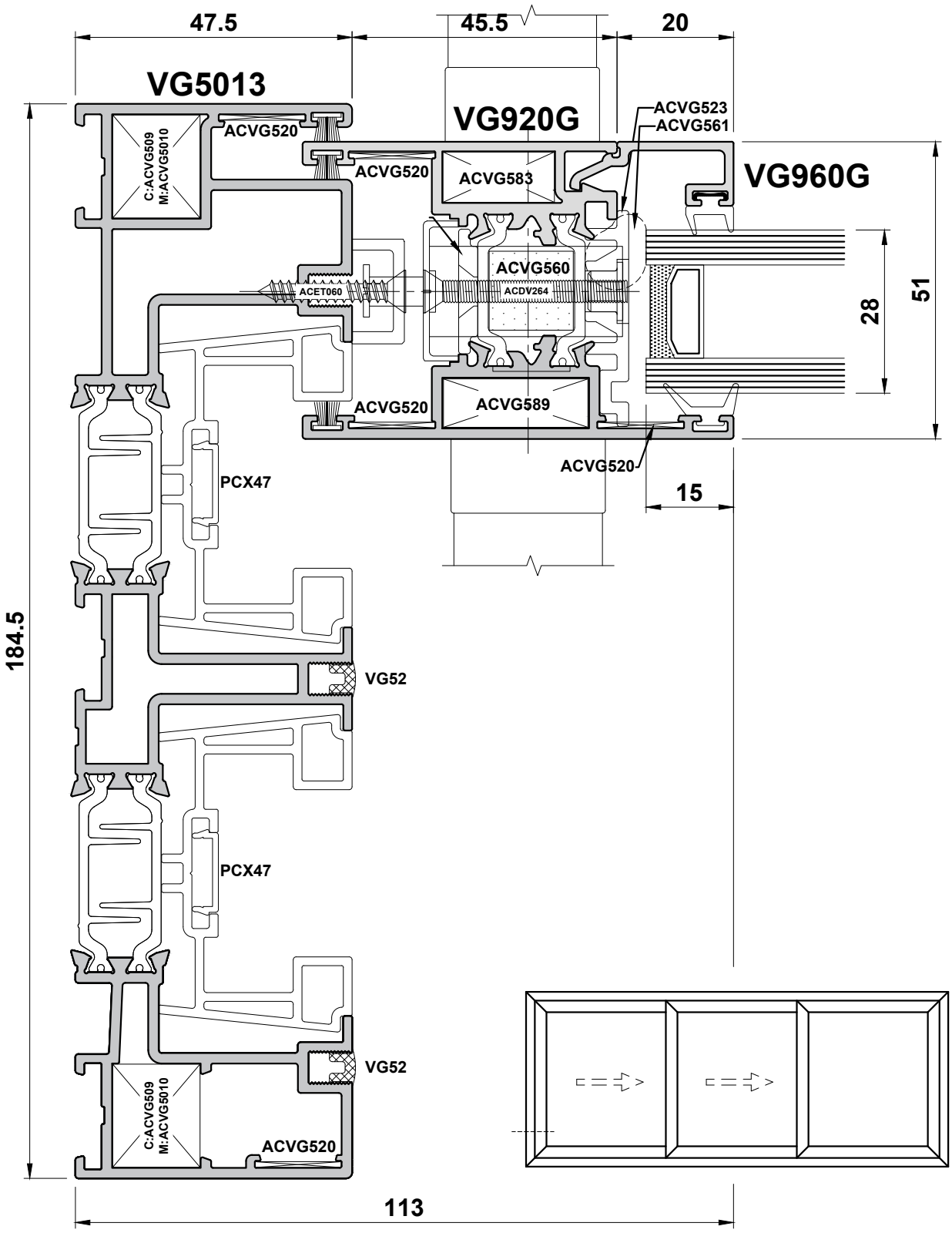

Do Not Scale From This Drawing

Detail 9C HYB

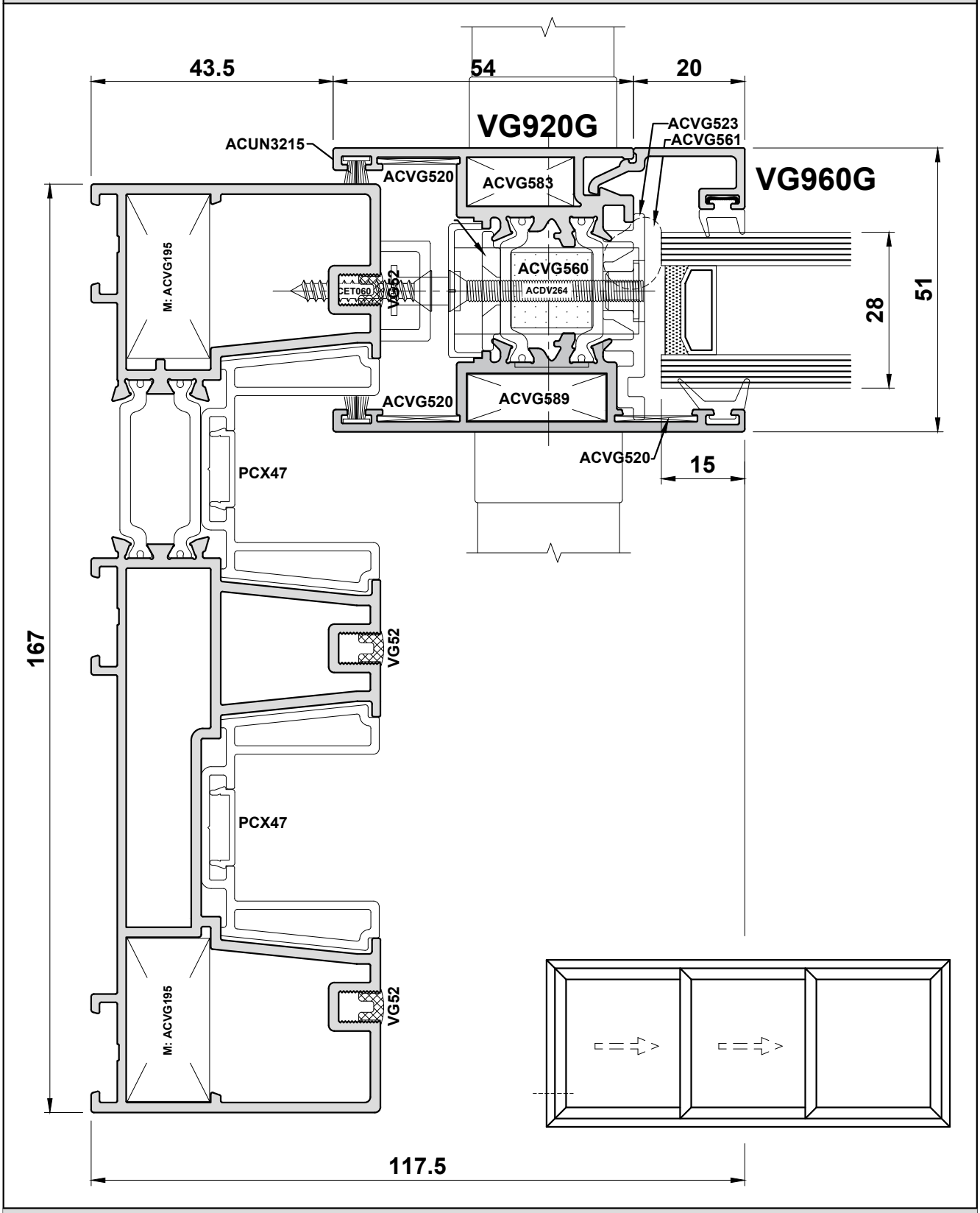

Do Not Scale From This Drawing

Detail 9D HYB

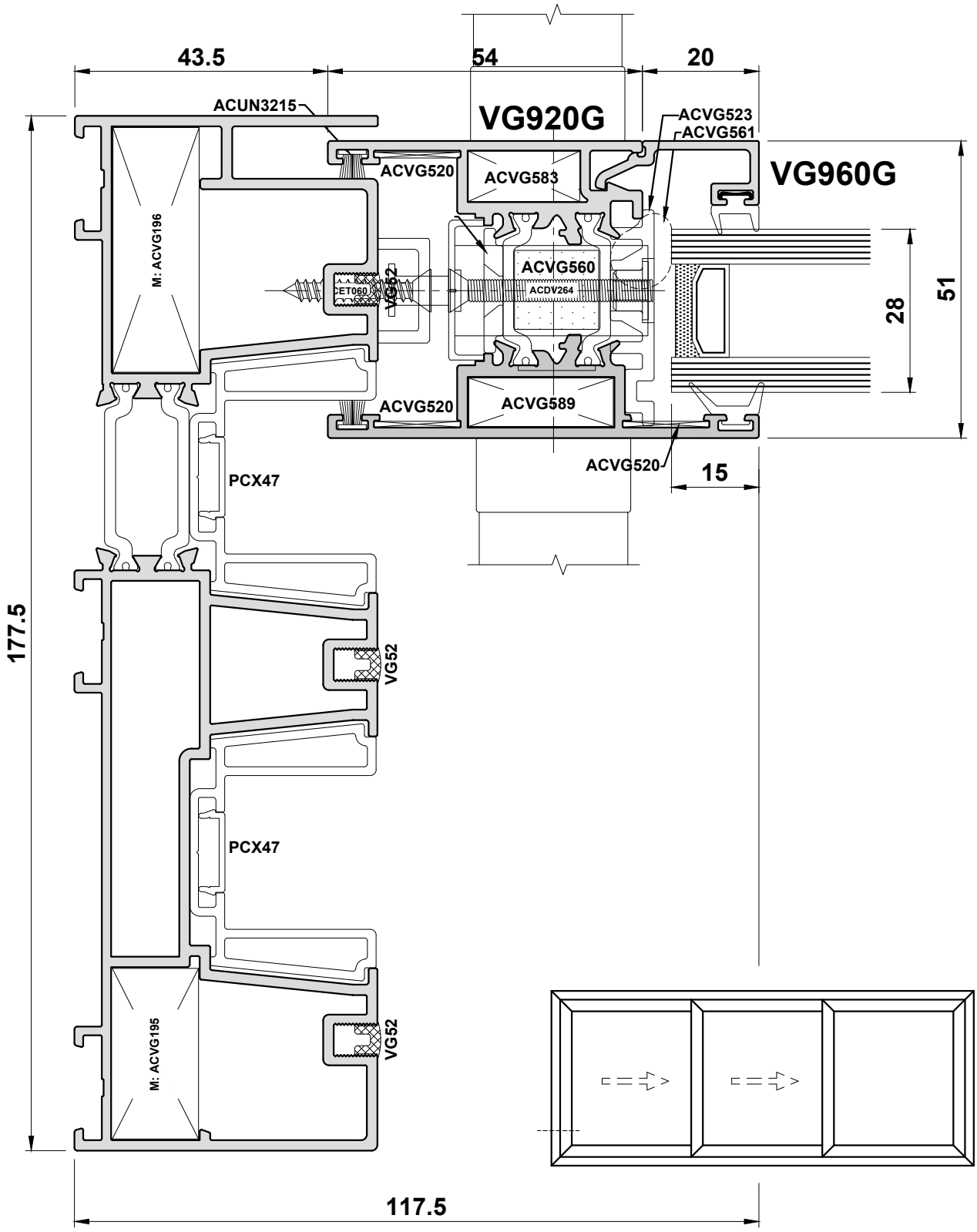

Do Not Scale From This Drawing

Detail 10A

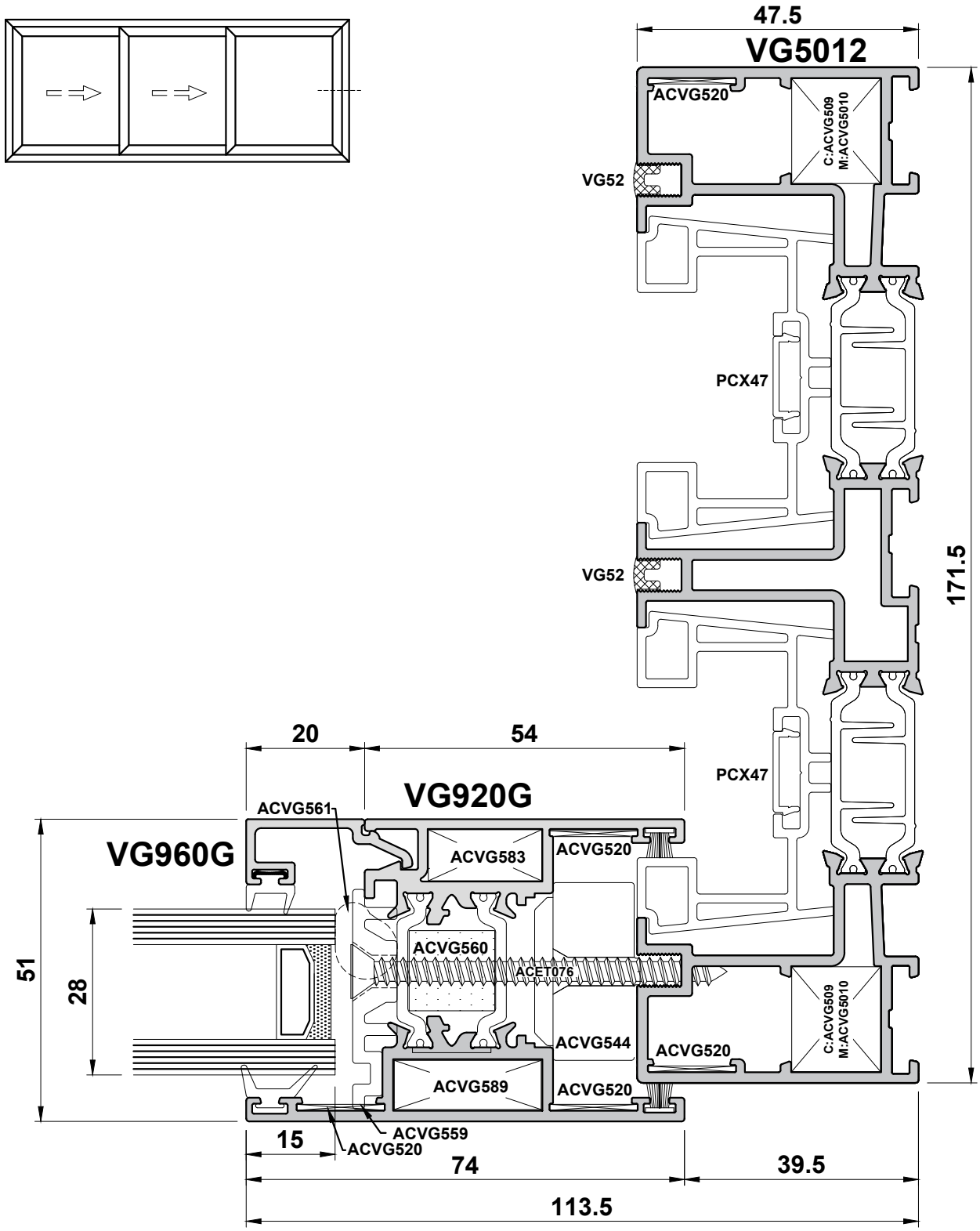

Do Not Scale From This Drawing

Detail 11A

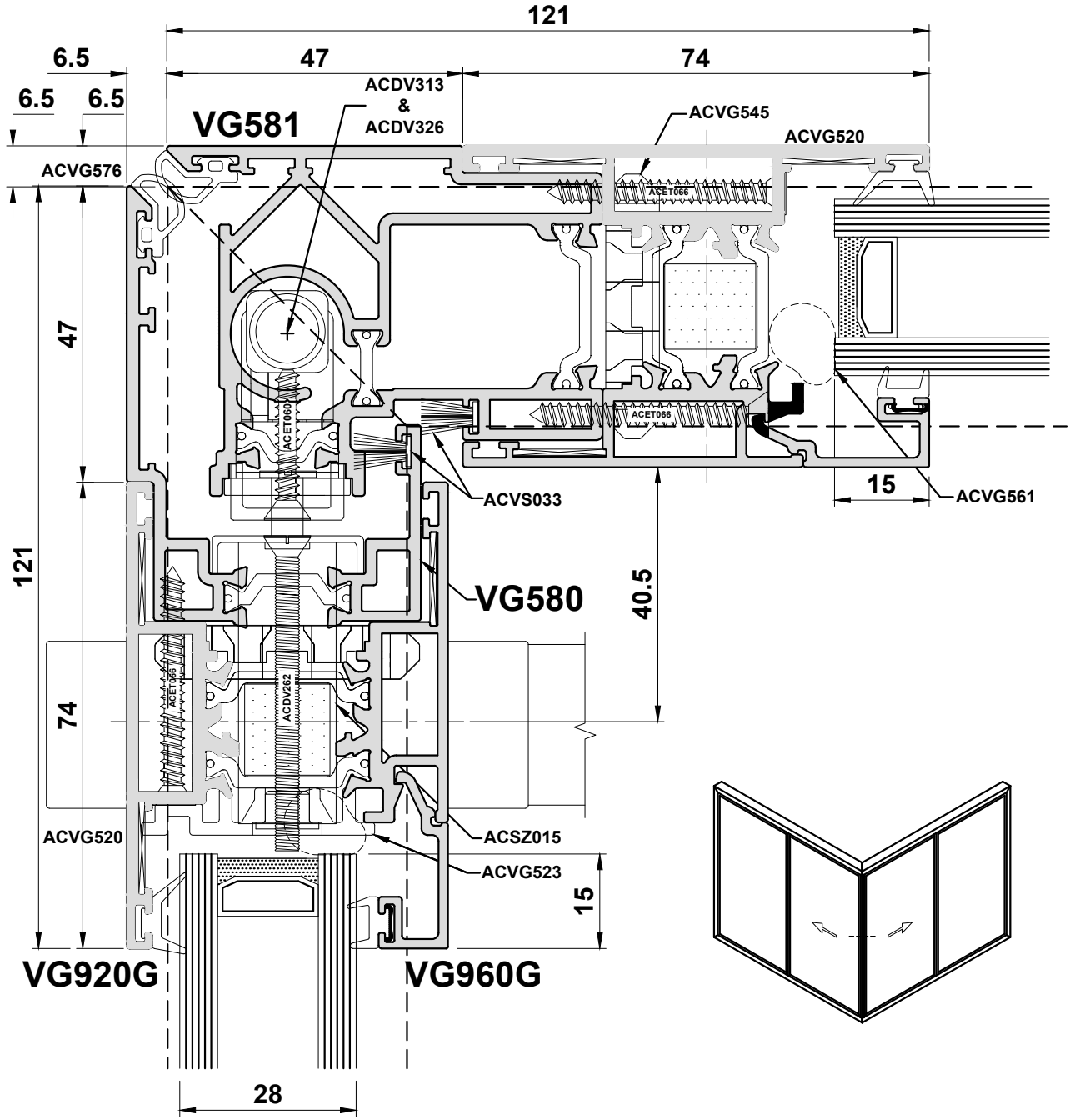

Do Not Scale From This Drawing

Visoglide Plus

Scale Elevations

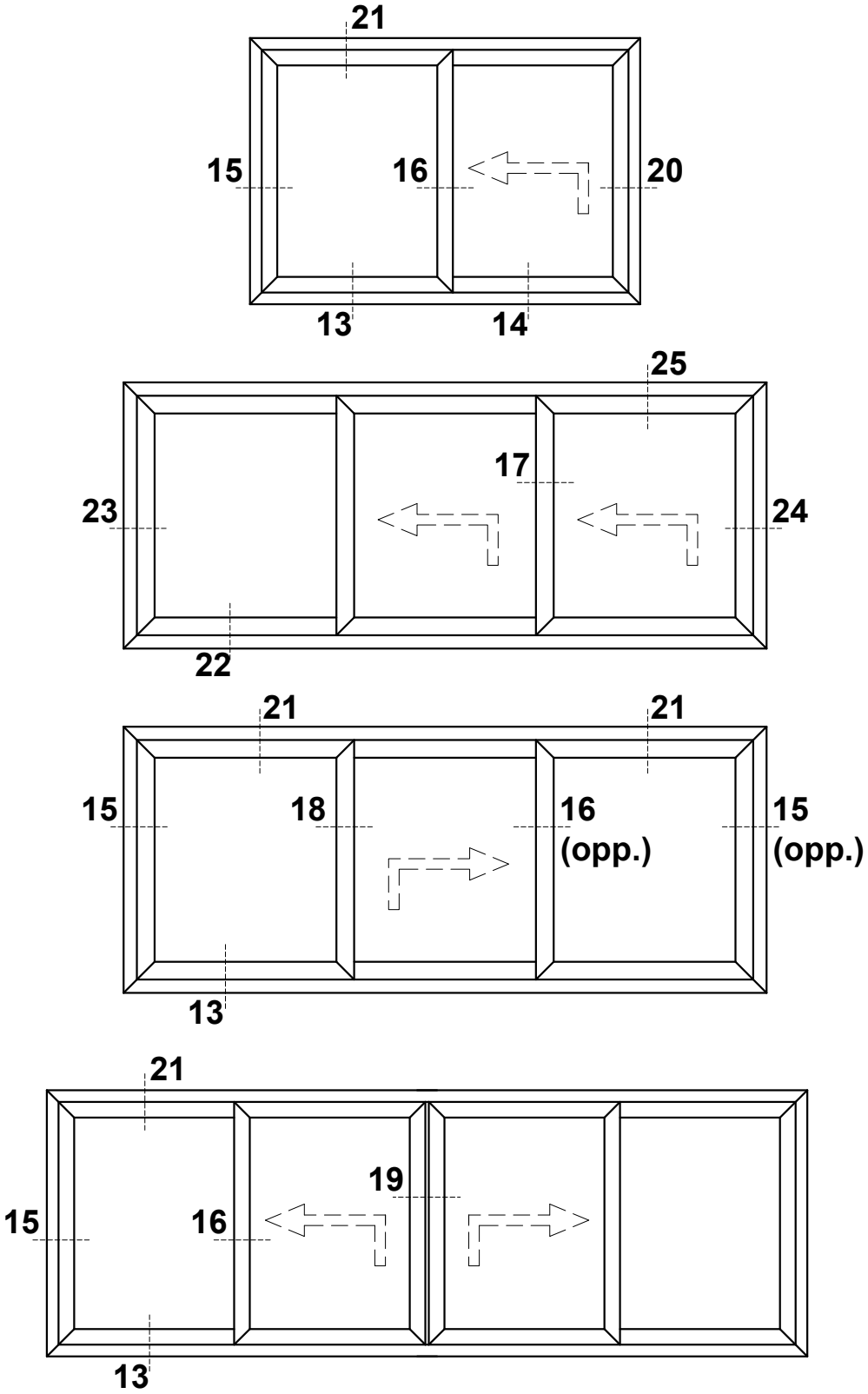

Do Not Scale From This Drawing

Detail 13

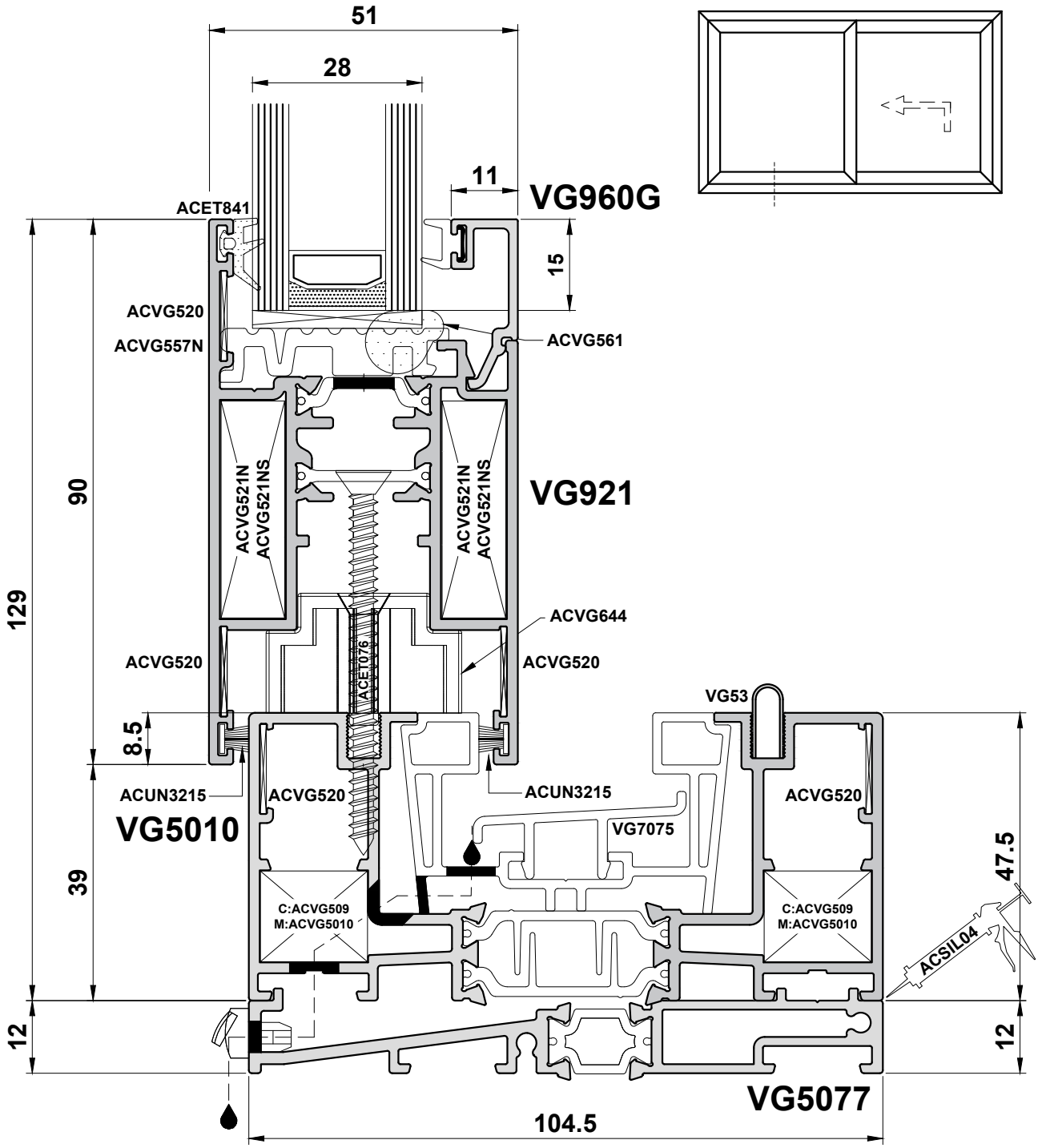

Do Not Scale From This Drawing

Detail 14

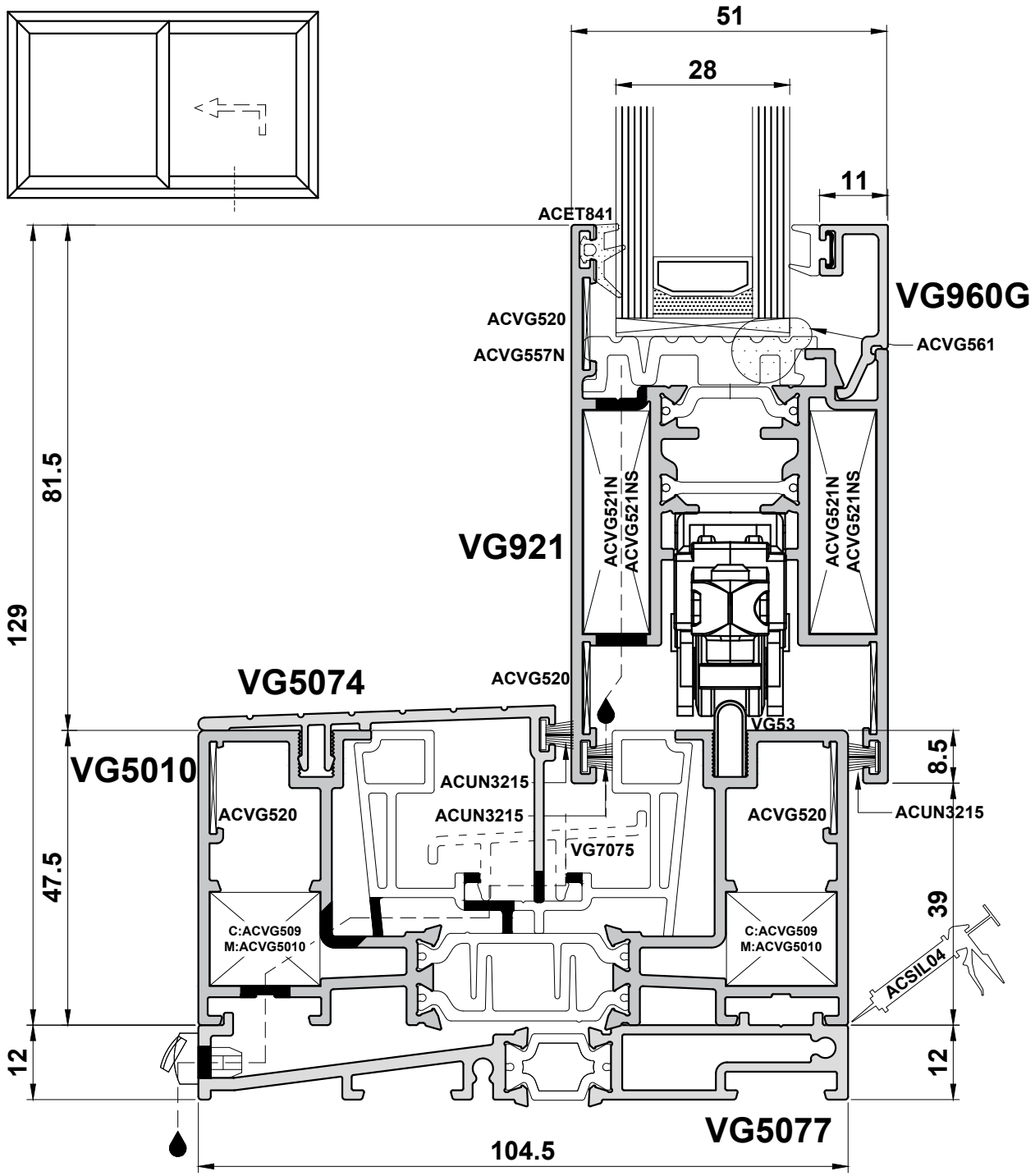

Do Not Scale From This Drawing

Detail 15

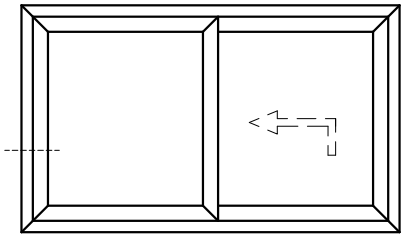

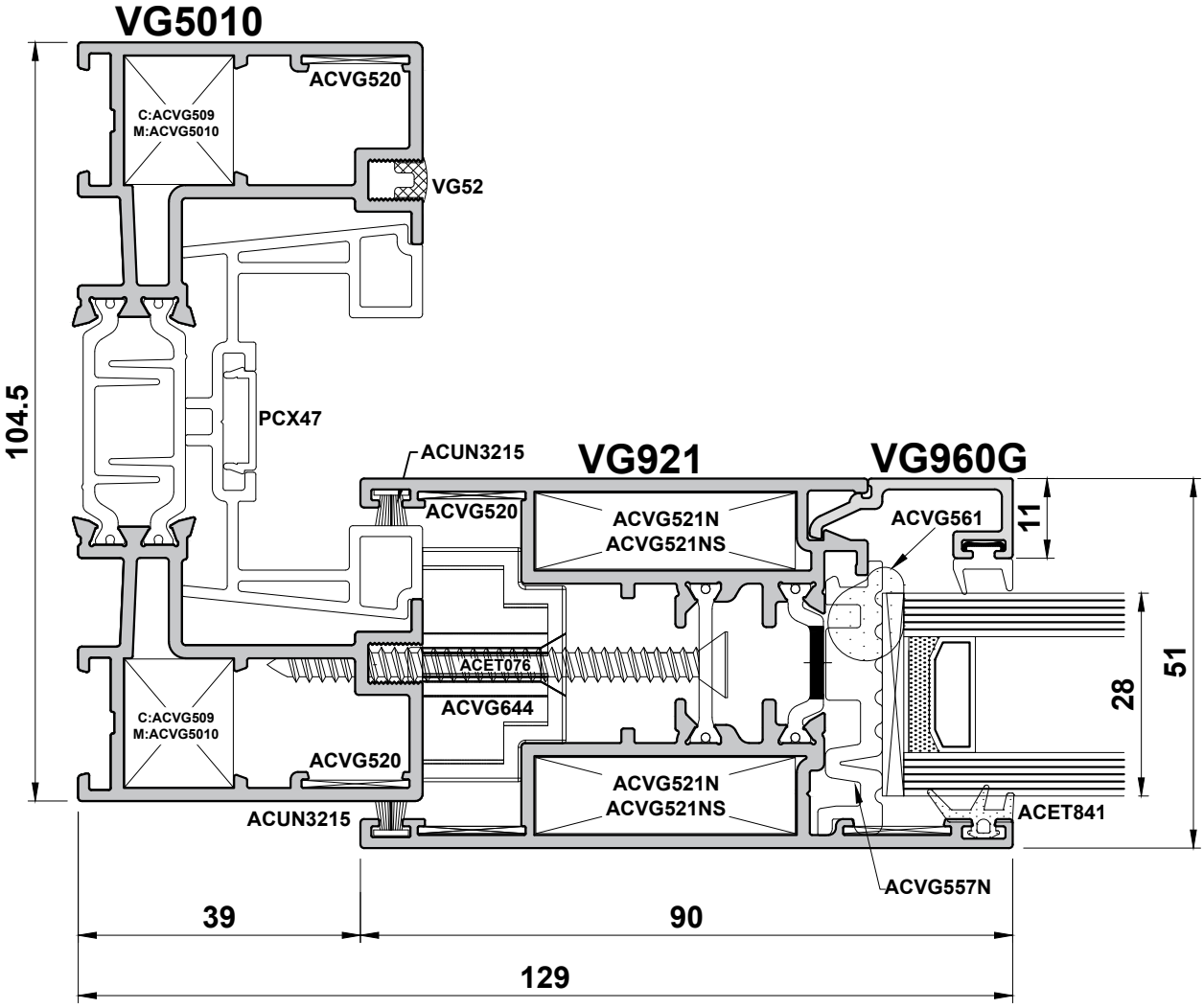

Do Not Scale From This Drawing

Detail 16A

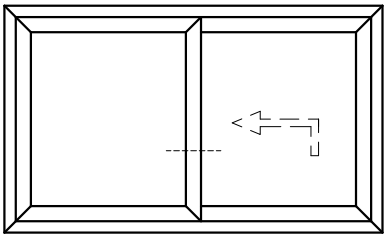

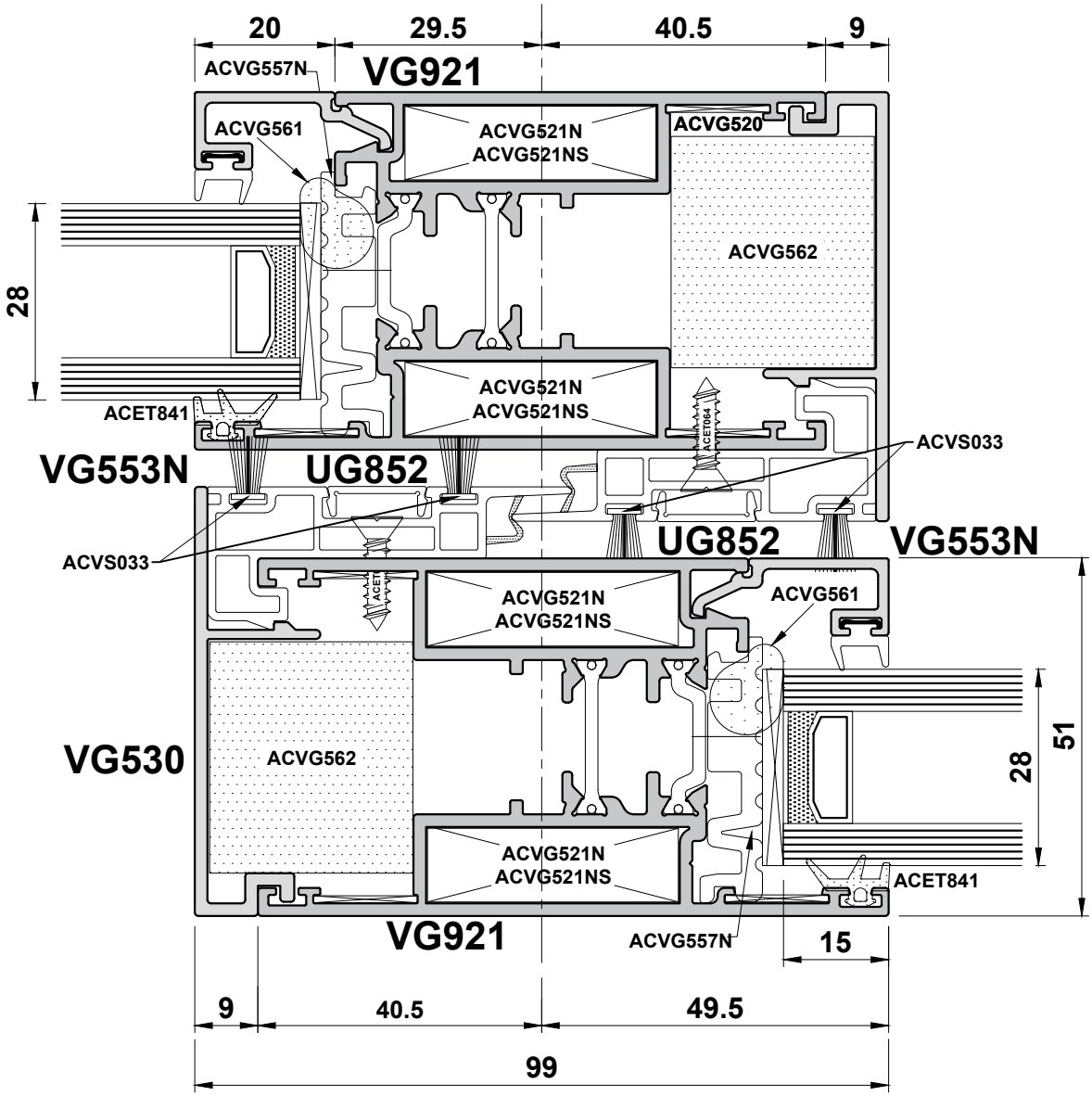

Do Not Scale From This Drawing

Detail 16B

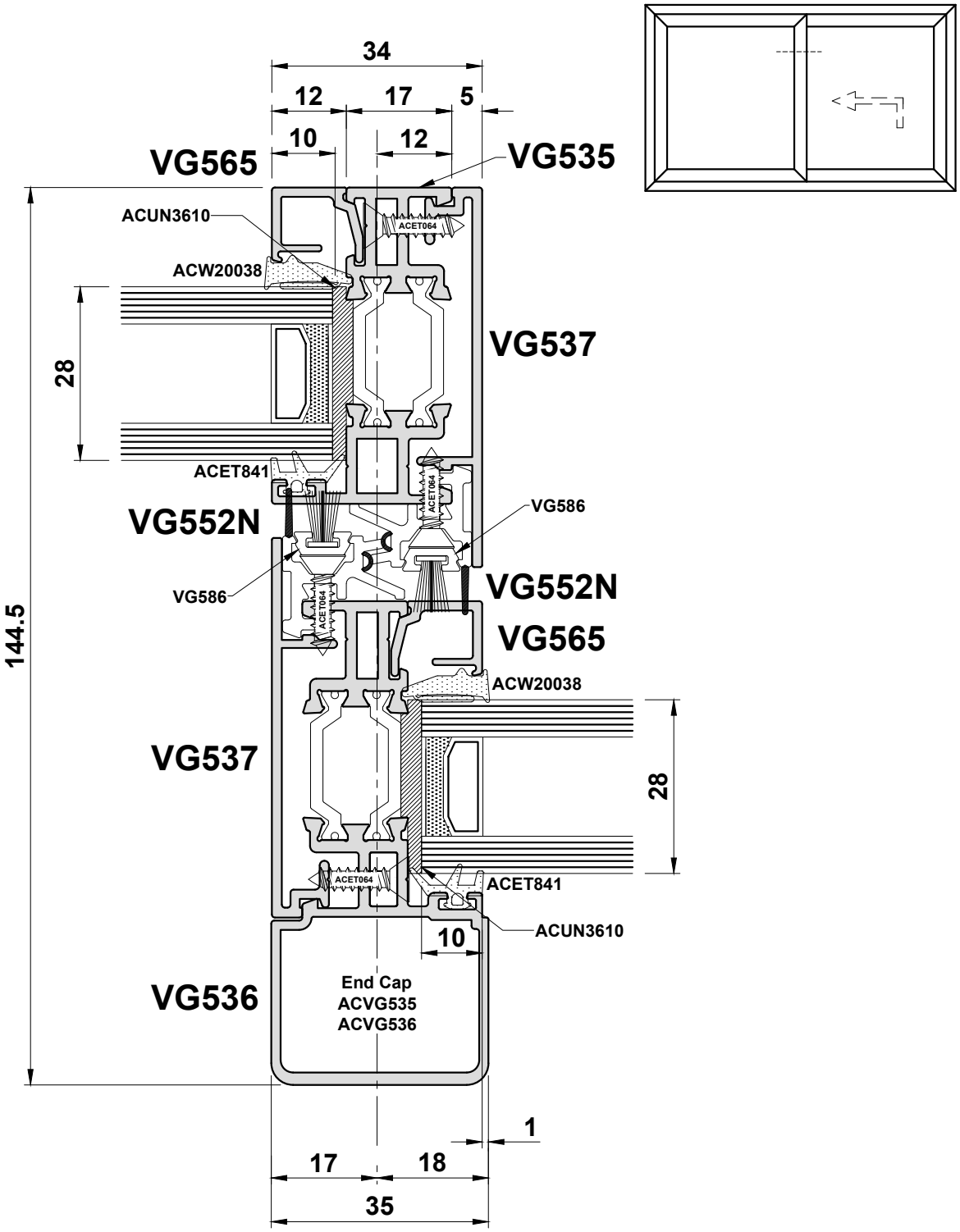

Do Not Scale From This Drawing

Detail 16C

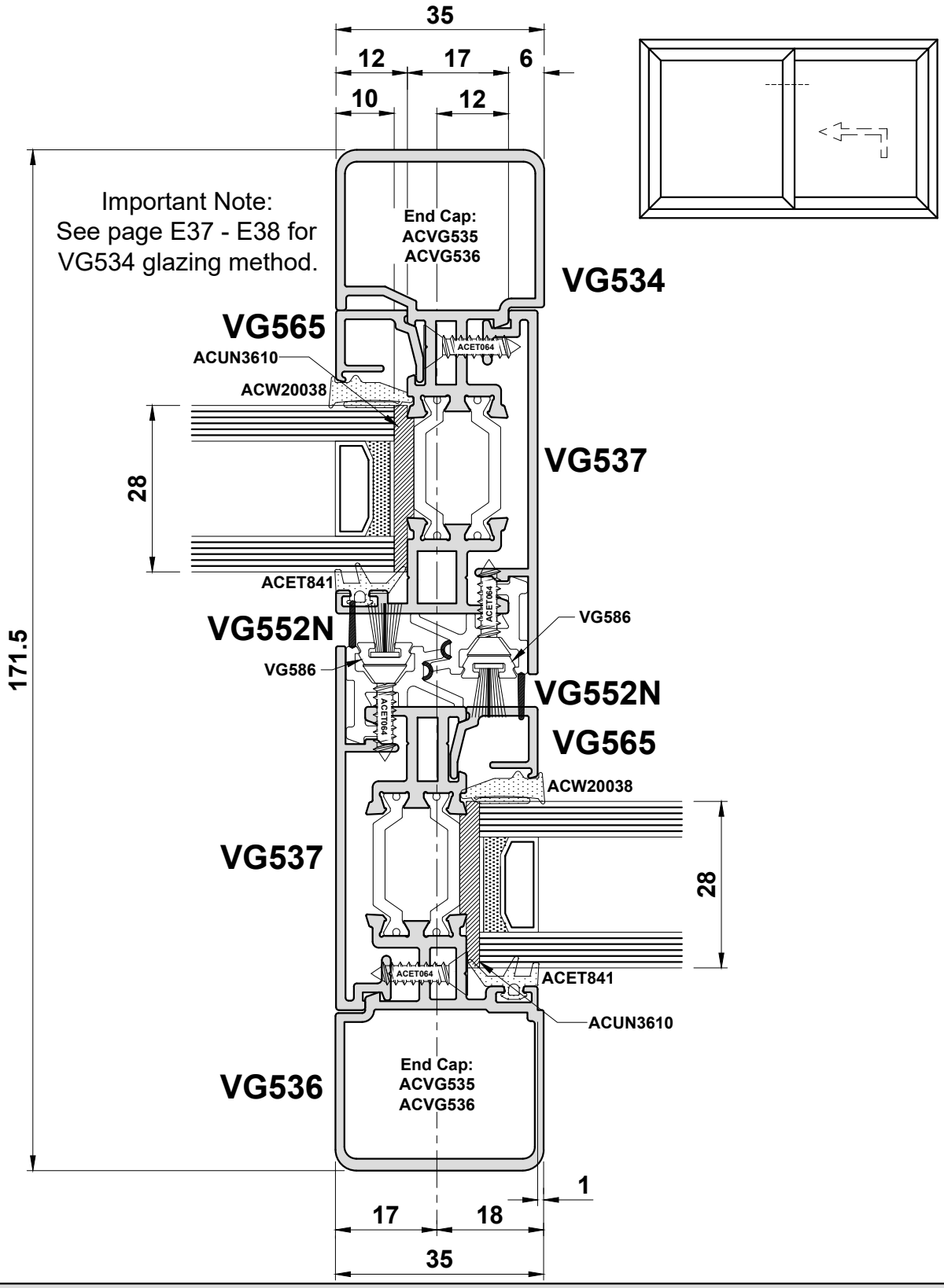

Do Not Scale From This Drawing

Detail 16D

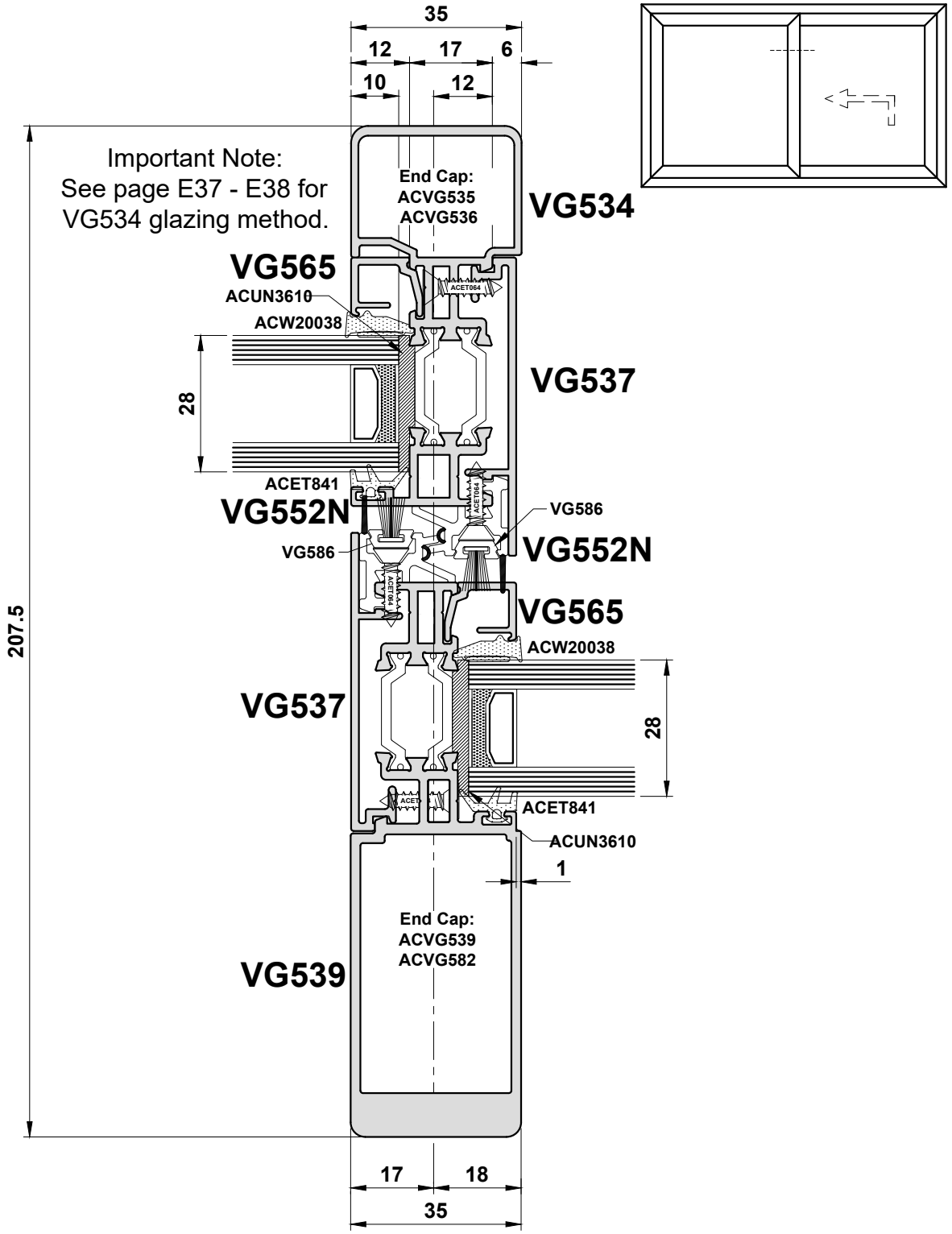

Scale 1:0.8

Do Not Scale From This Drawing

Detail 17

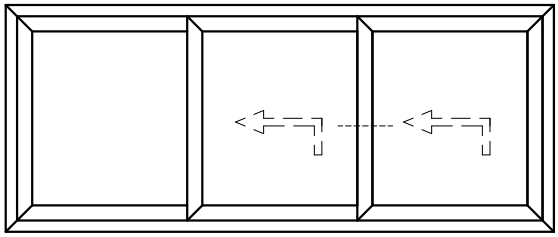

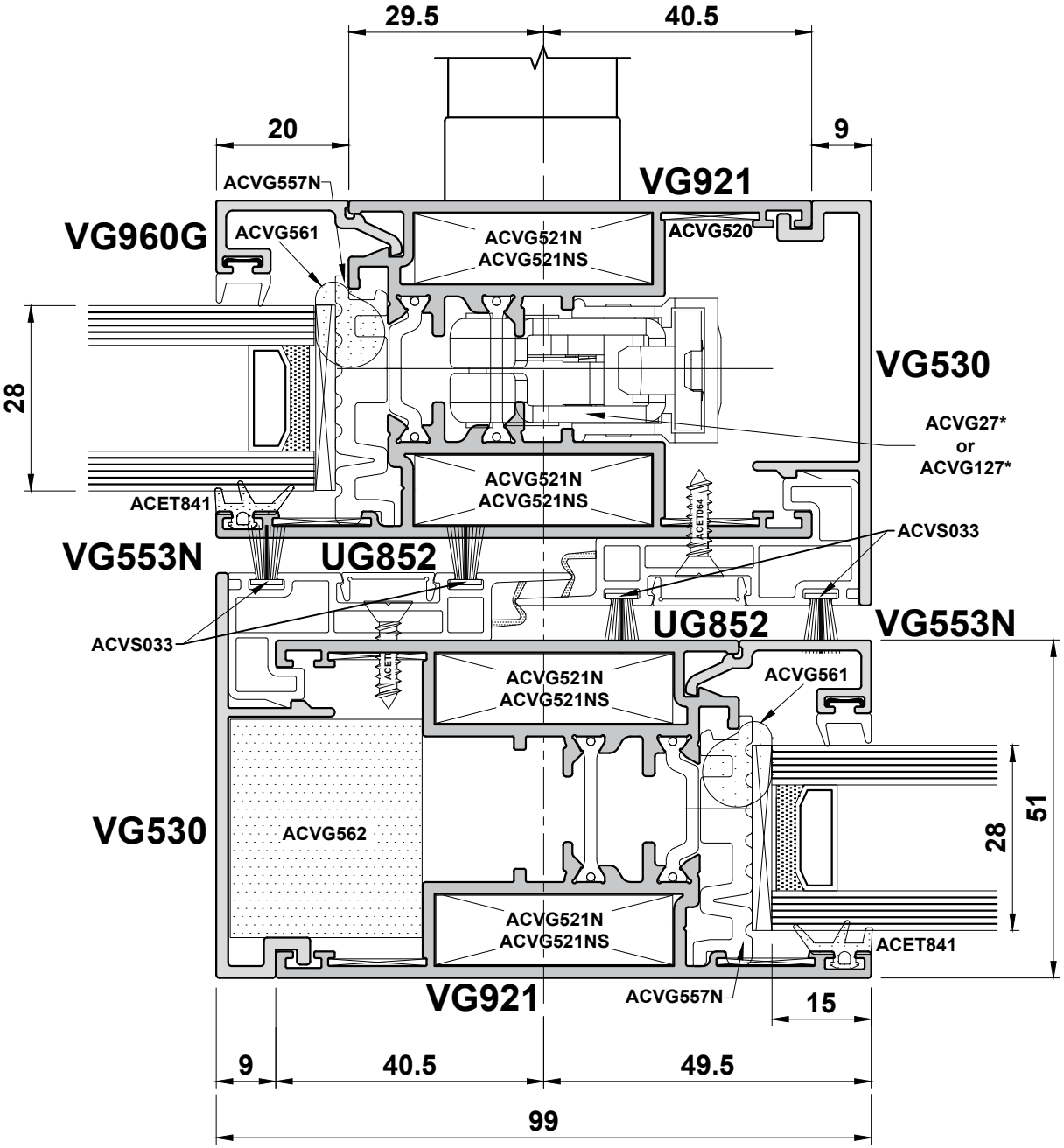

Do Not Scale From This Drawing

Detail 18

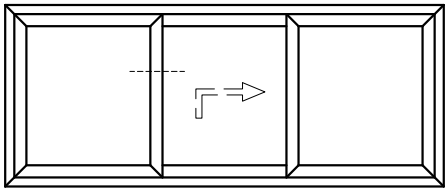

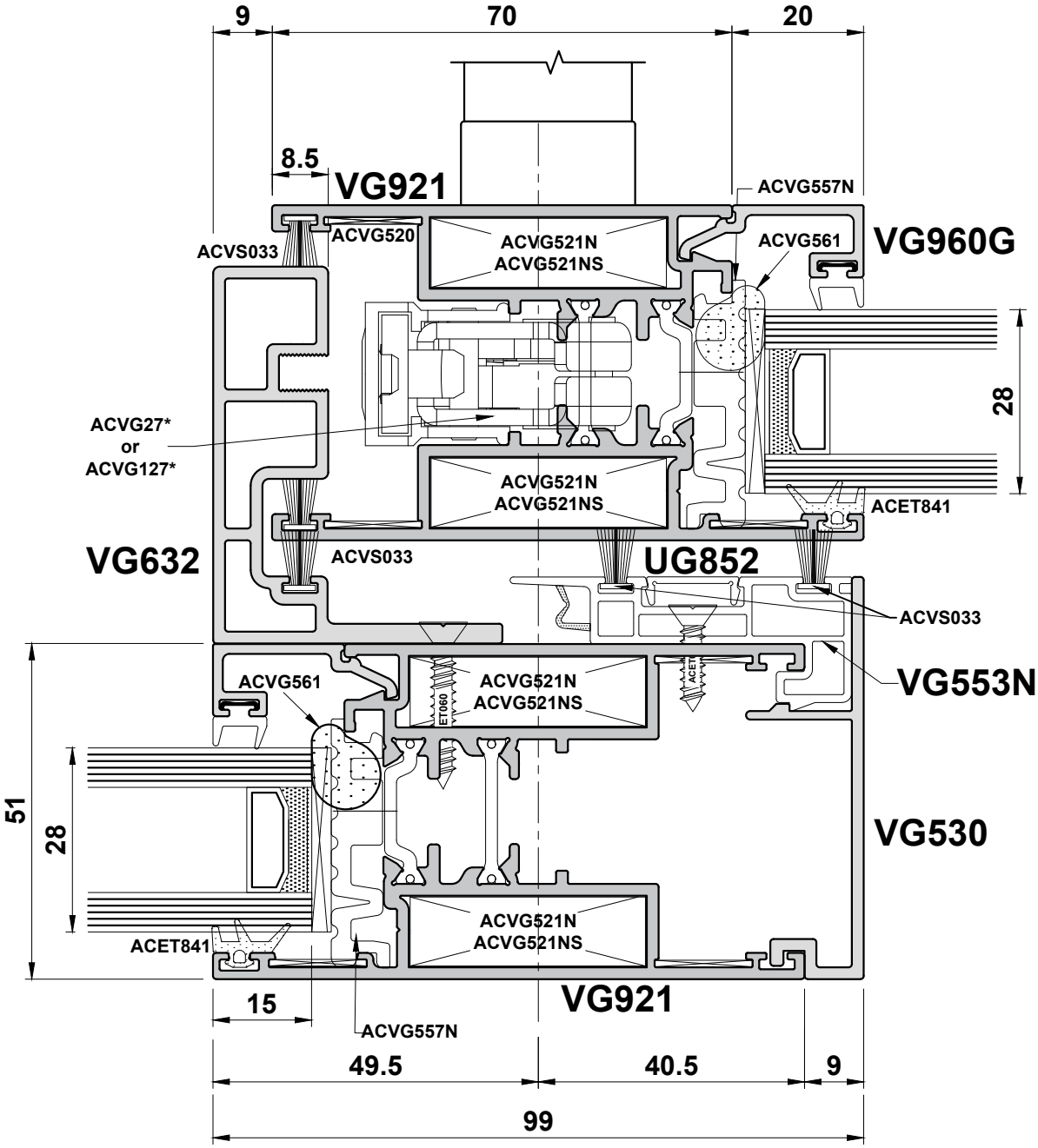

Do Not Scale From This Drawing

Detail 19

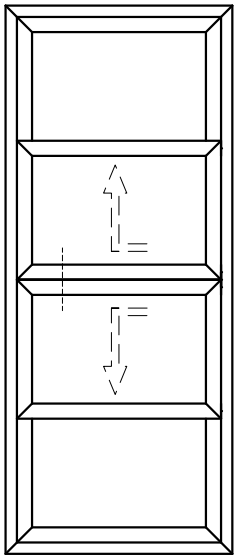

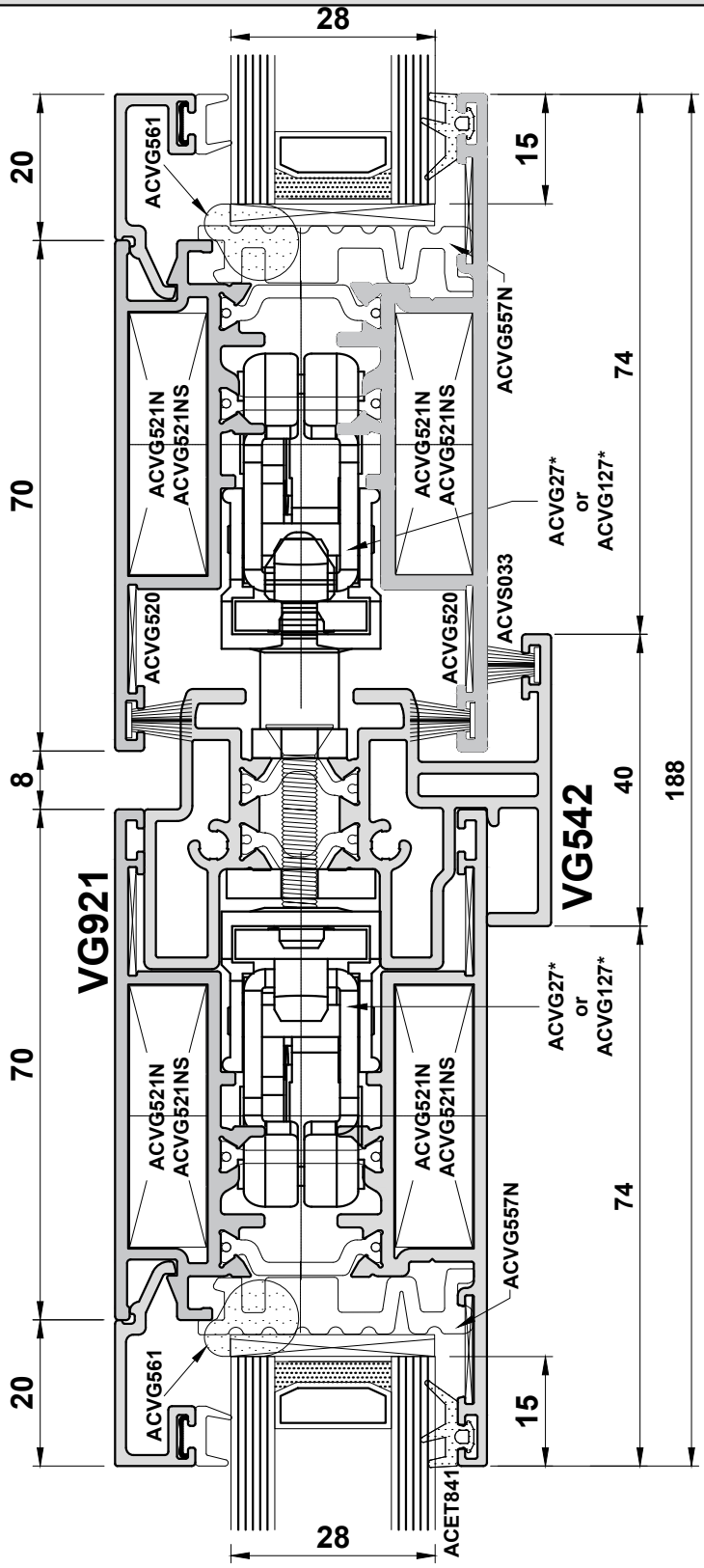

Do Not Scale From This Drawing

Detail 20

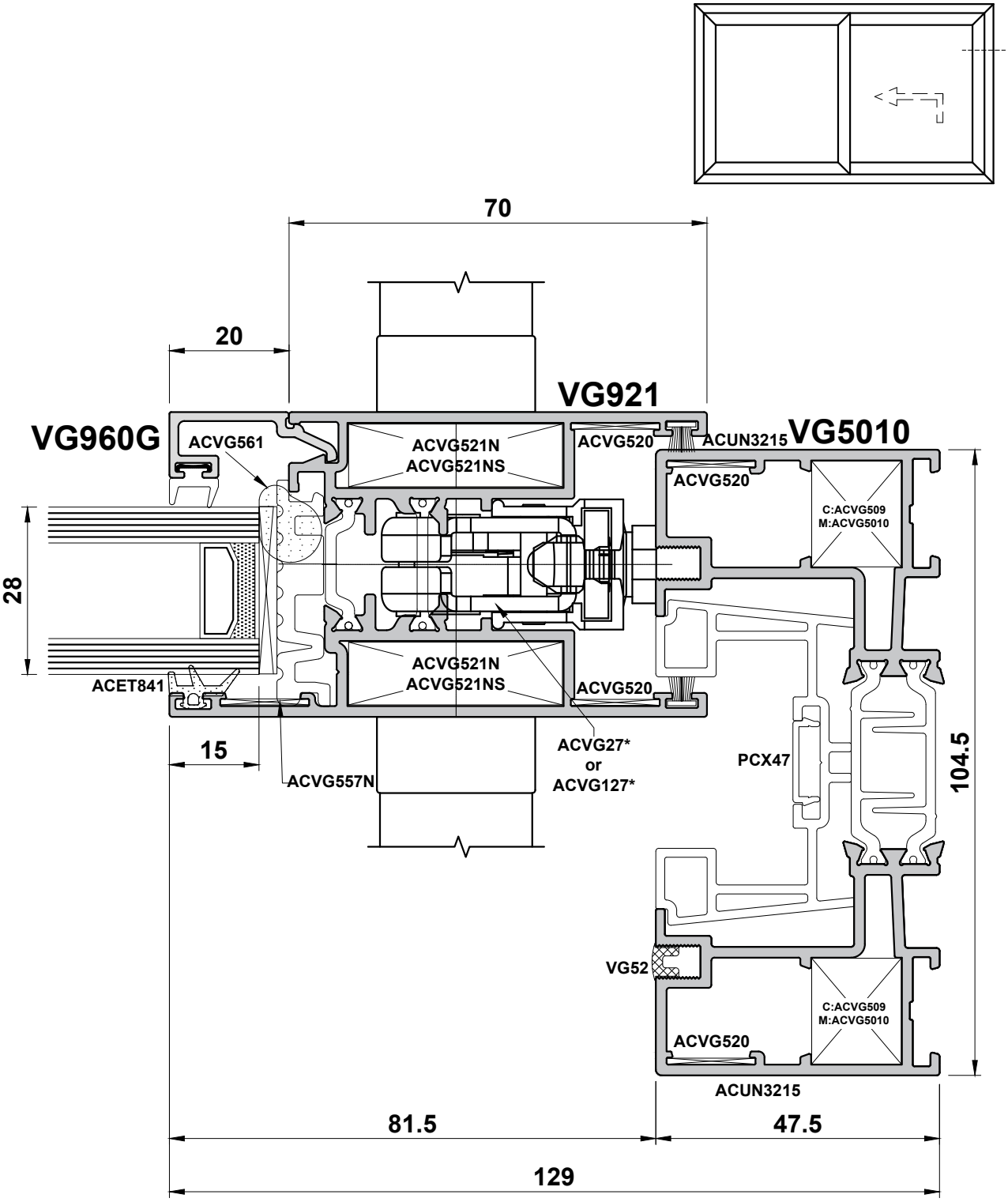

Do Not Scale From This Drawing

Detail 21

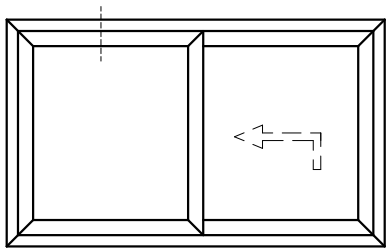

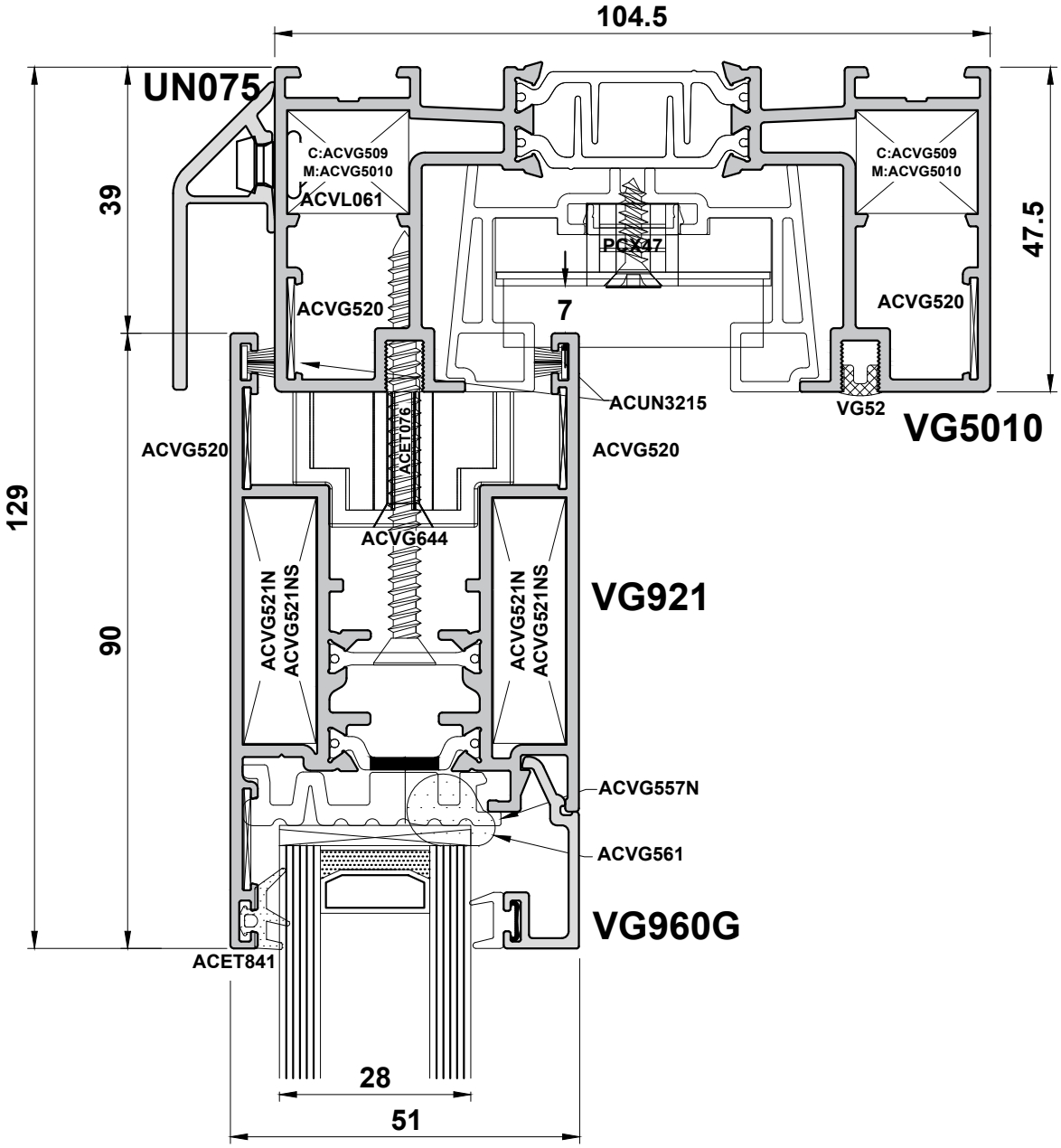

Do Not Scale From This Drawing

Detail 22

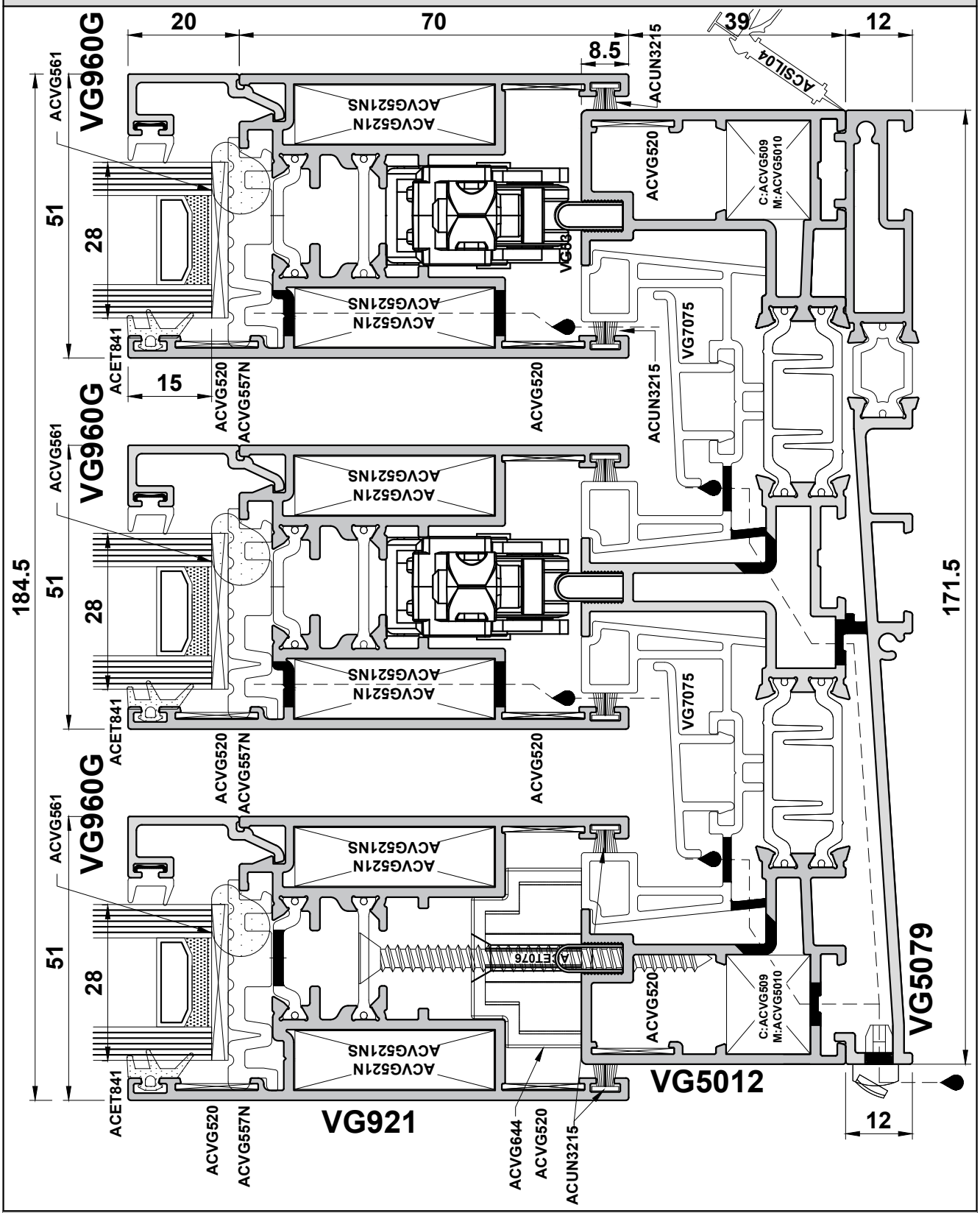

Do Not Scale From This Drawing

Detail 23

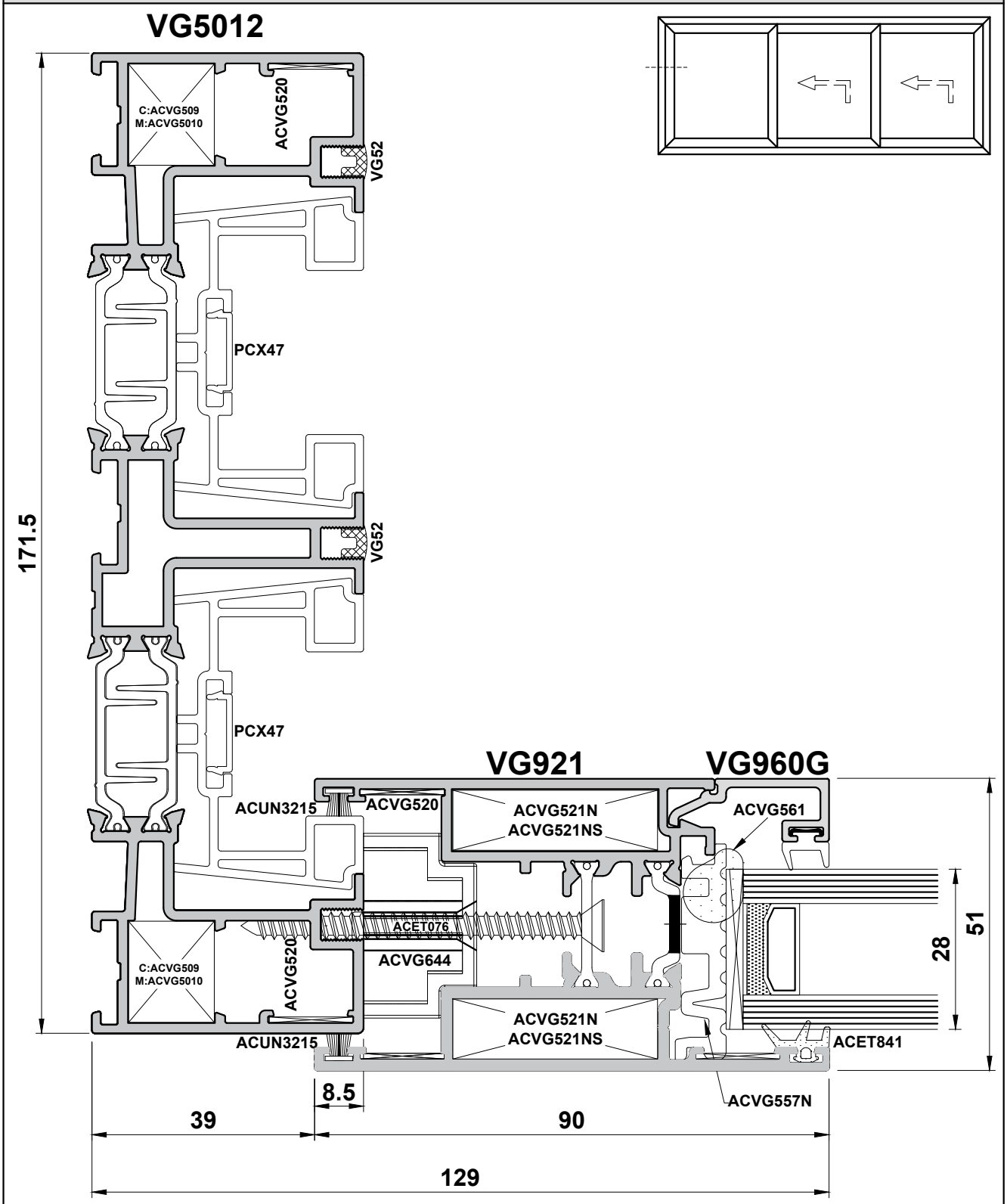

Do Not Scale From This Drawing

Detail 24

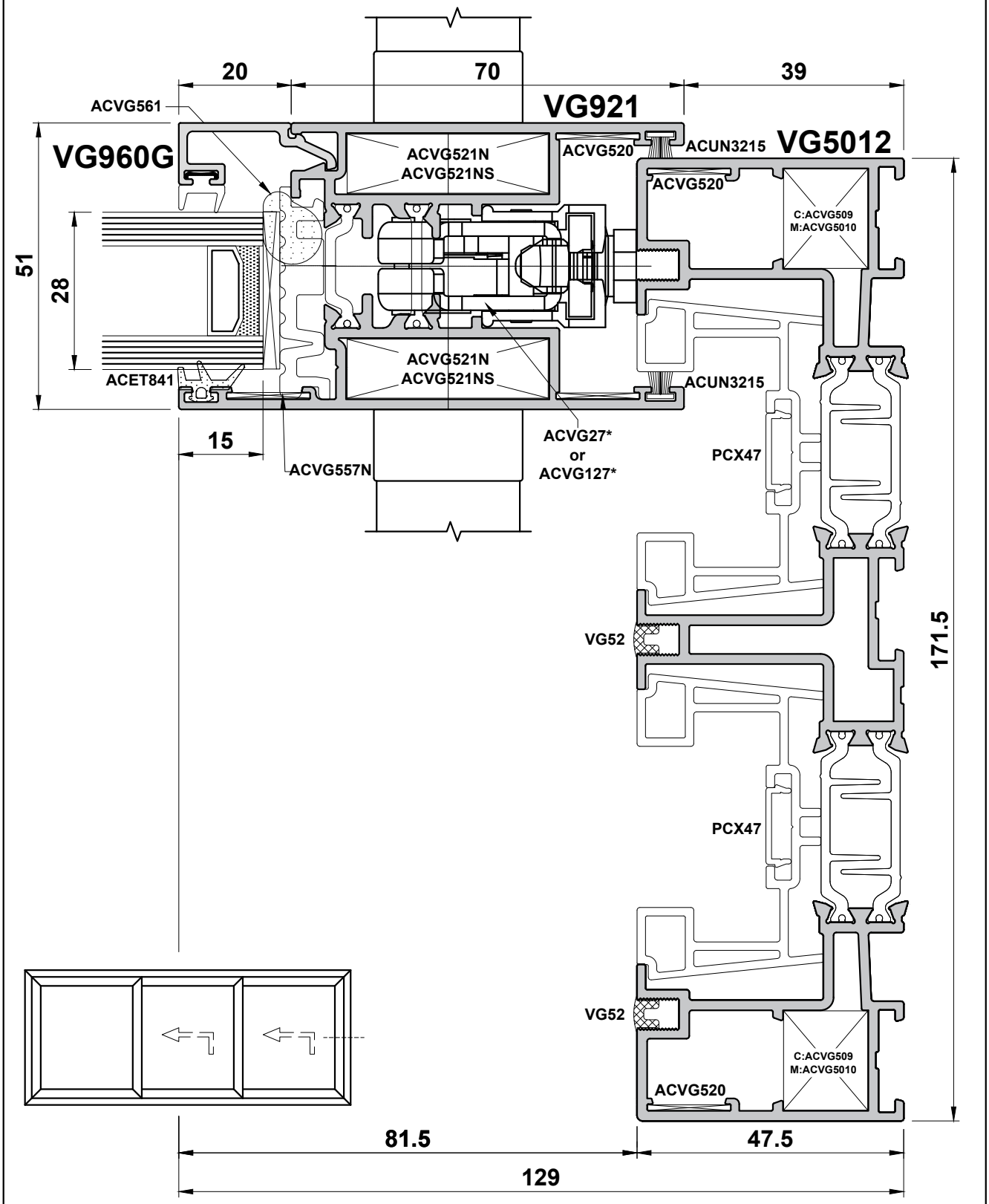

Do Not Scale From This Drawing

Detail 25

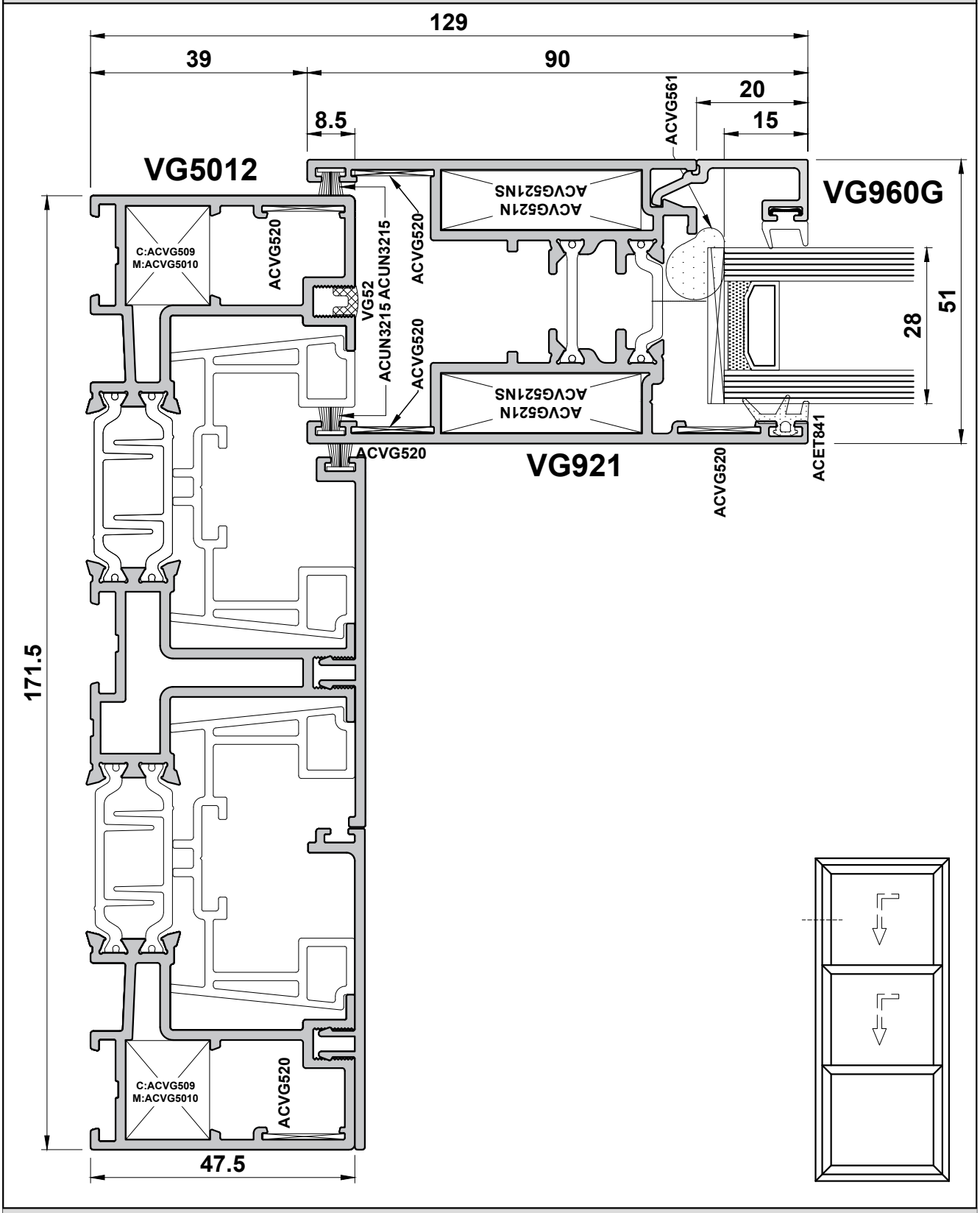

Do Not Scale From This Drawing

Scale Elevations

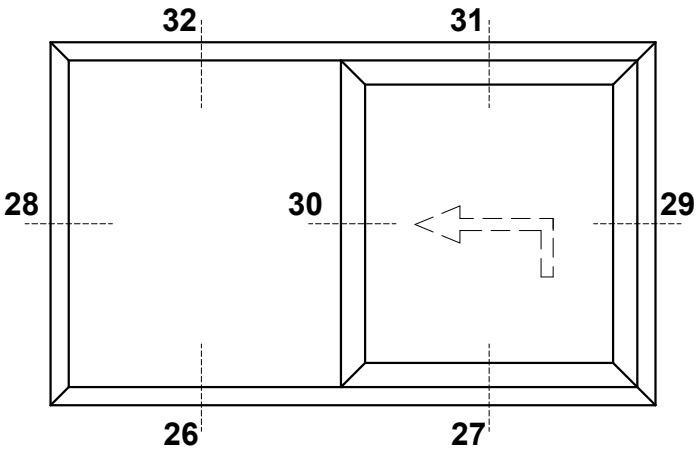

Mono Rail with Glazed Outer Frame

Do Not Scale From This Drawing

Detail 26

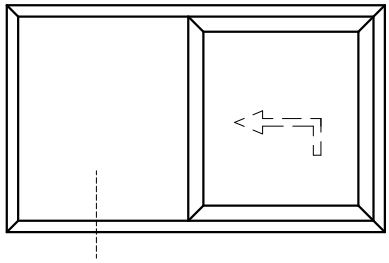

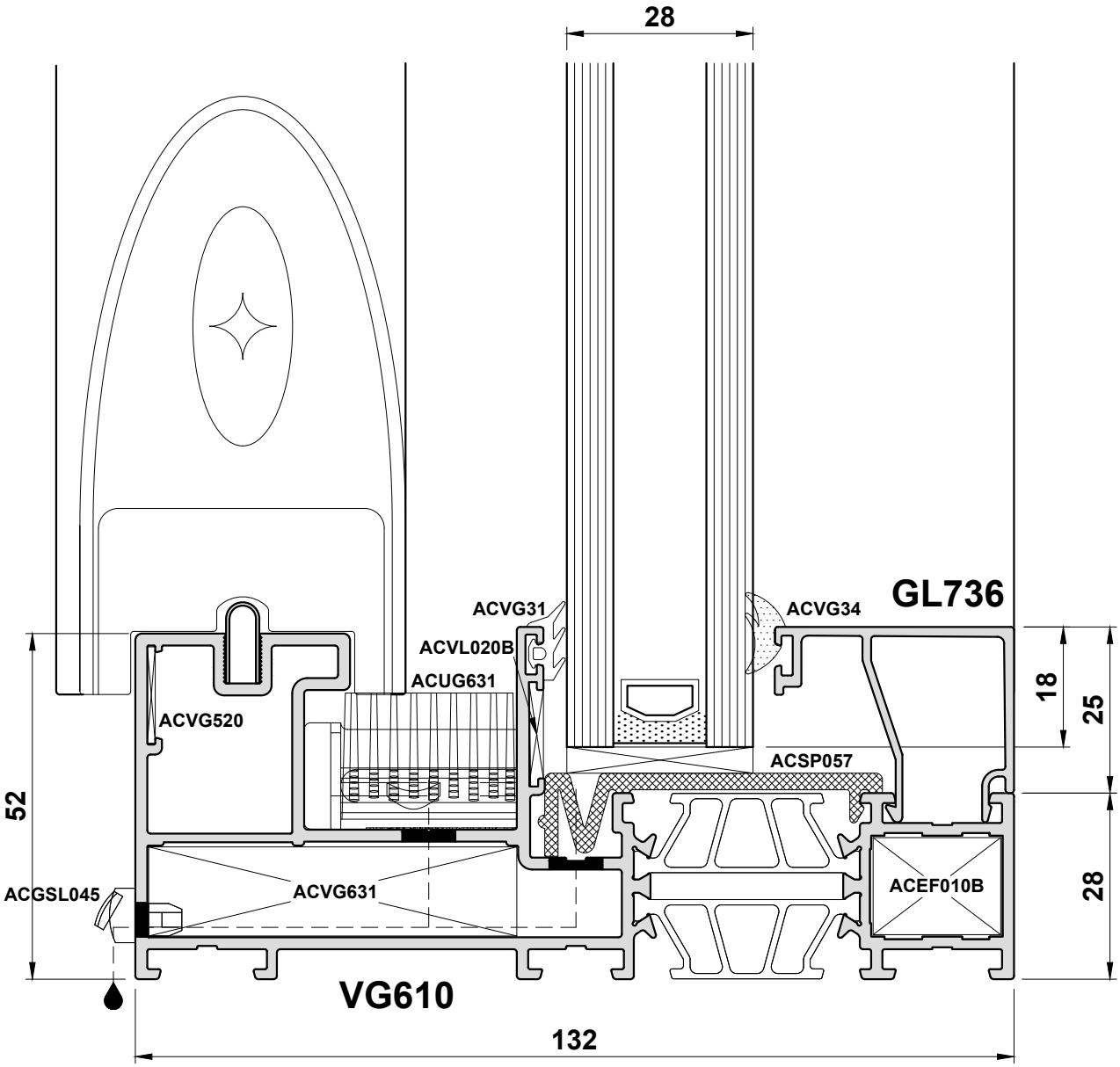

Do Not Scale From This Drawing

Detail 27

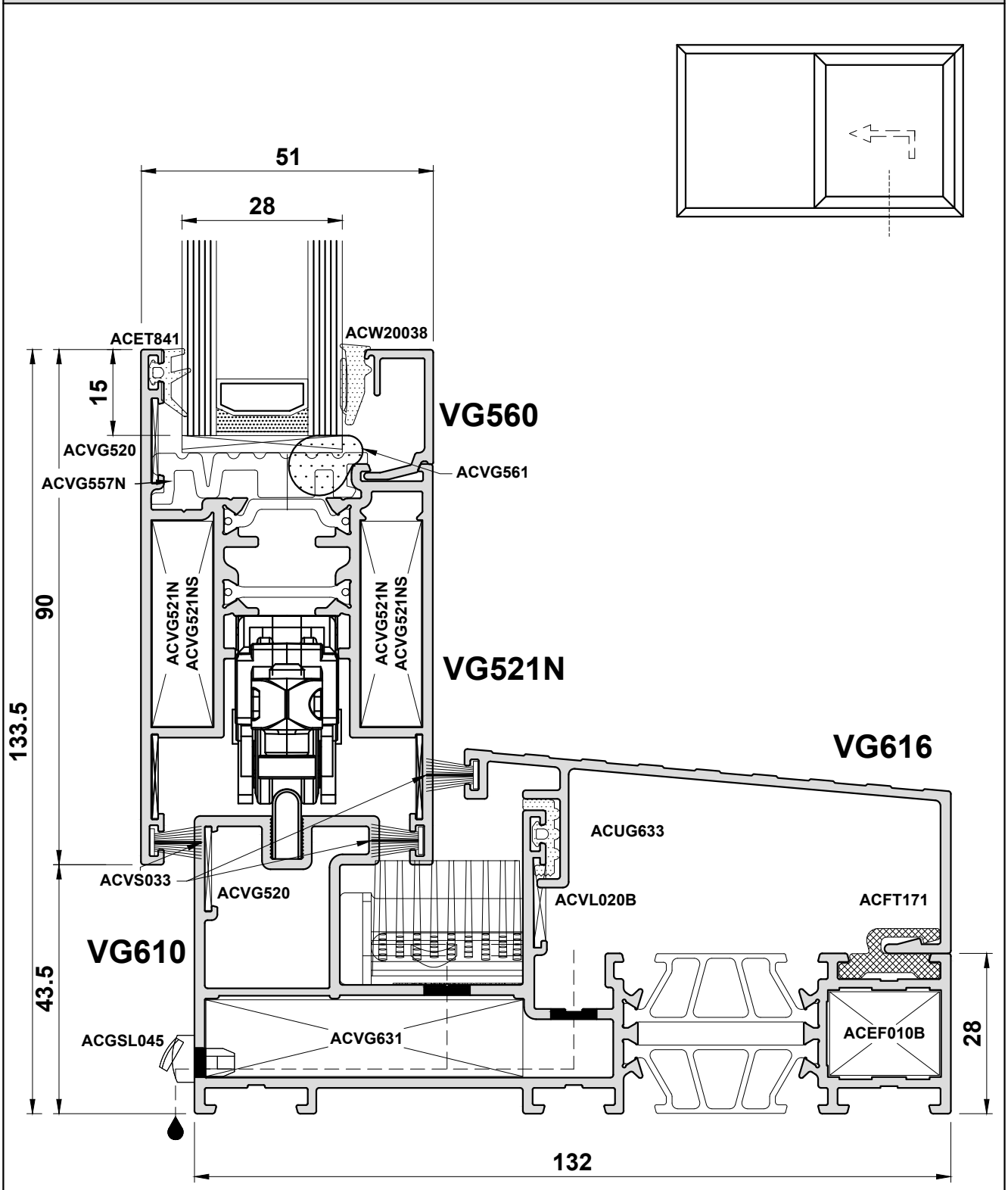

Do Not Scale From This Drawing

Detail 28

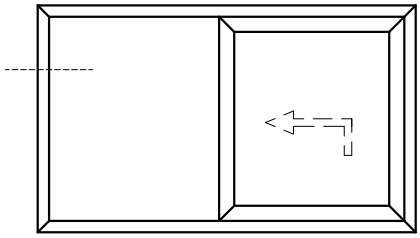

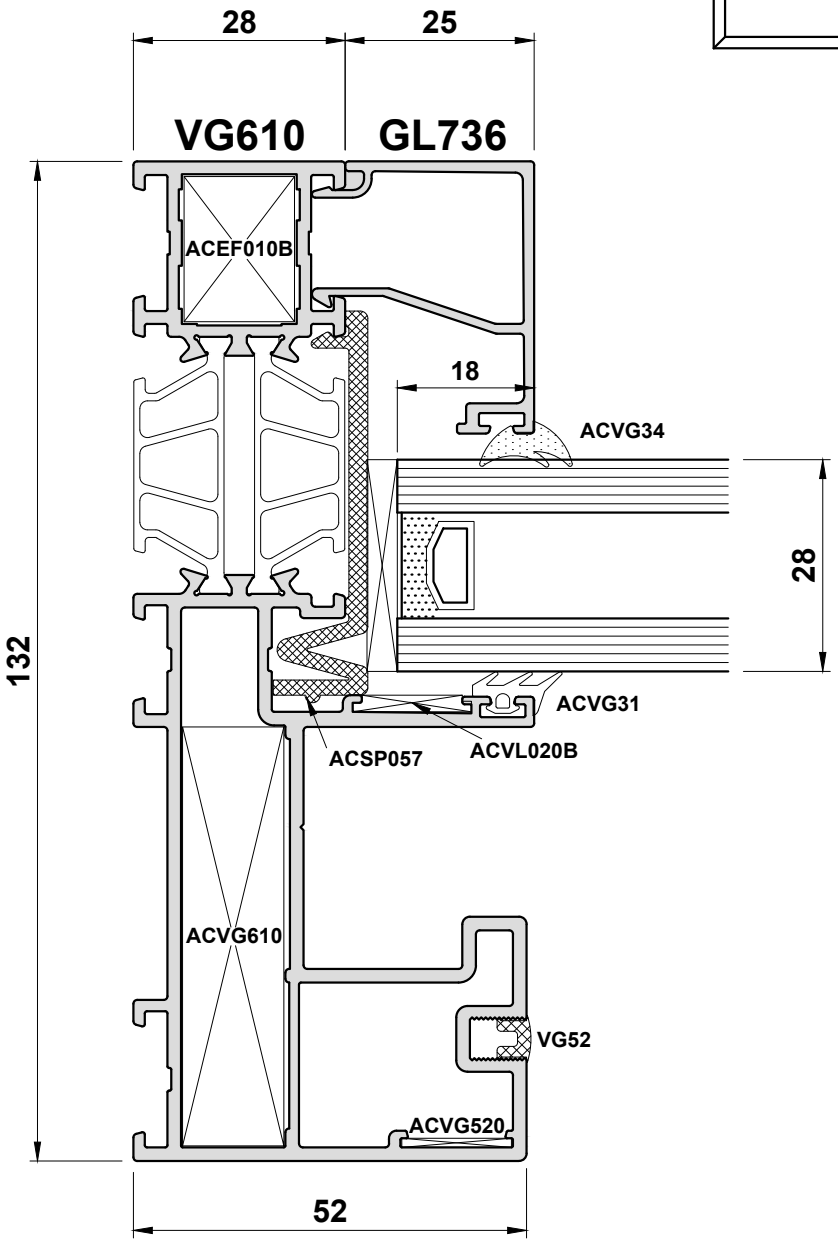

Do Not Scale From This Drawing

Detail 29

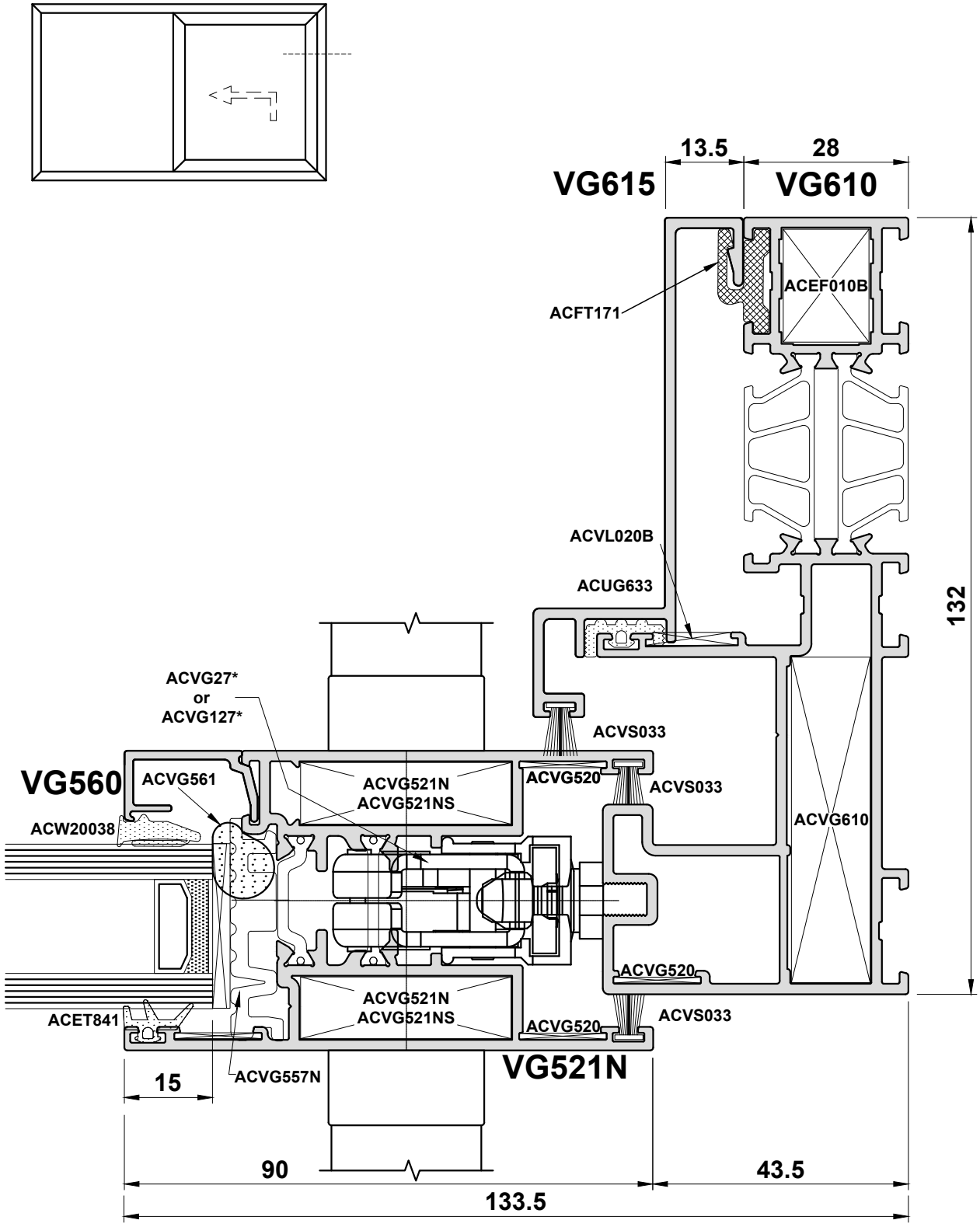

Do Not Scale From This Drawing

Detail 30

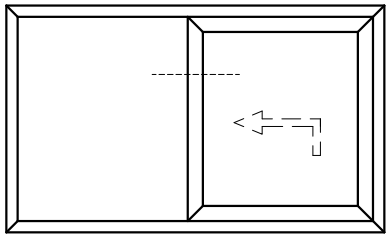

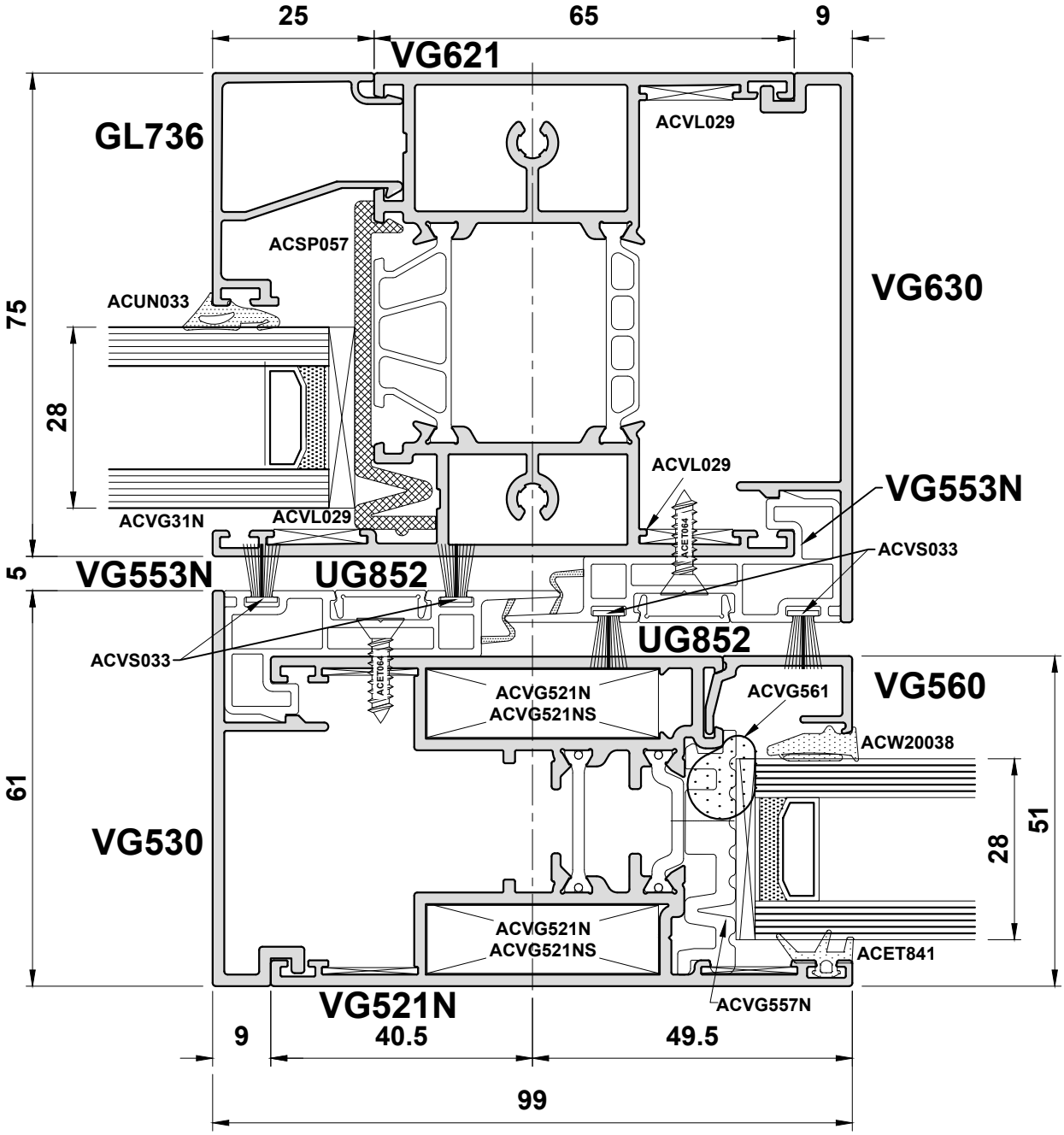

Do Not Scale From This Drawing

Detail 31

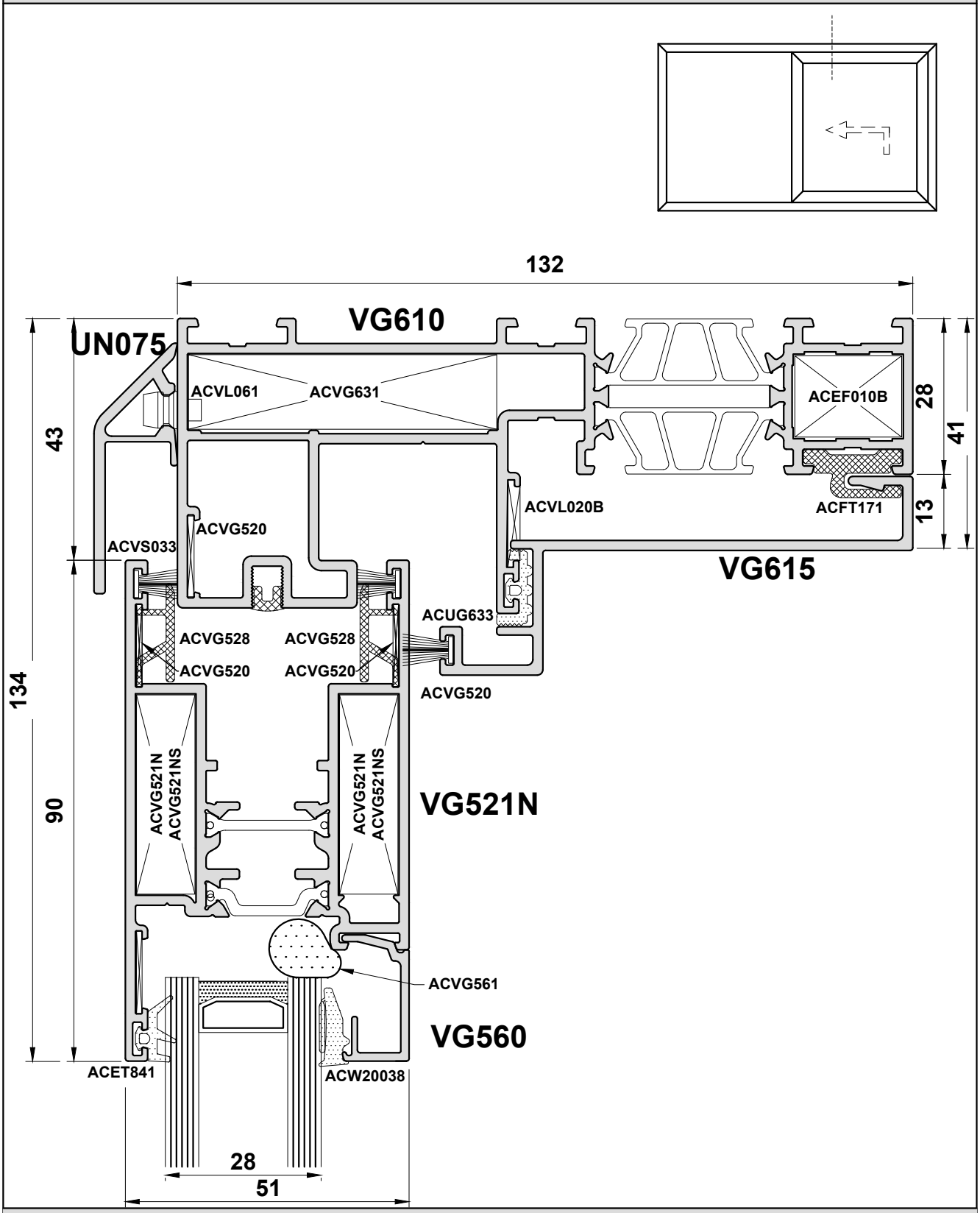

Do Not Scale From This Drawing

Detail 32

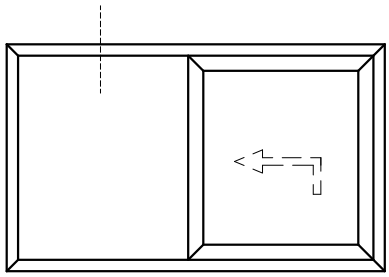

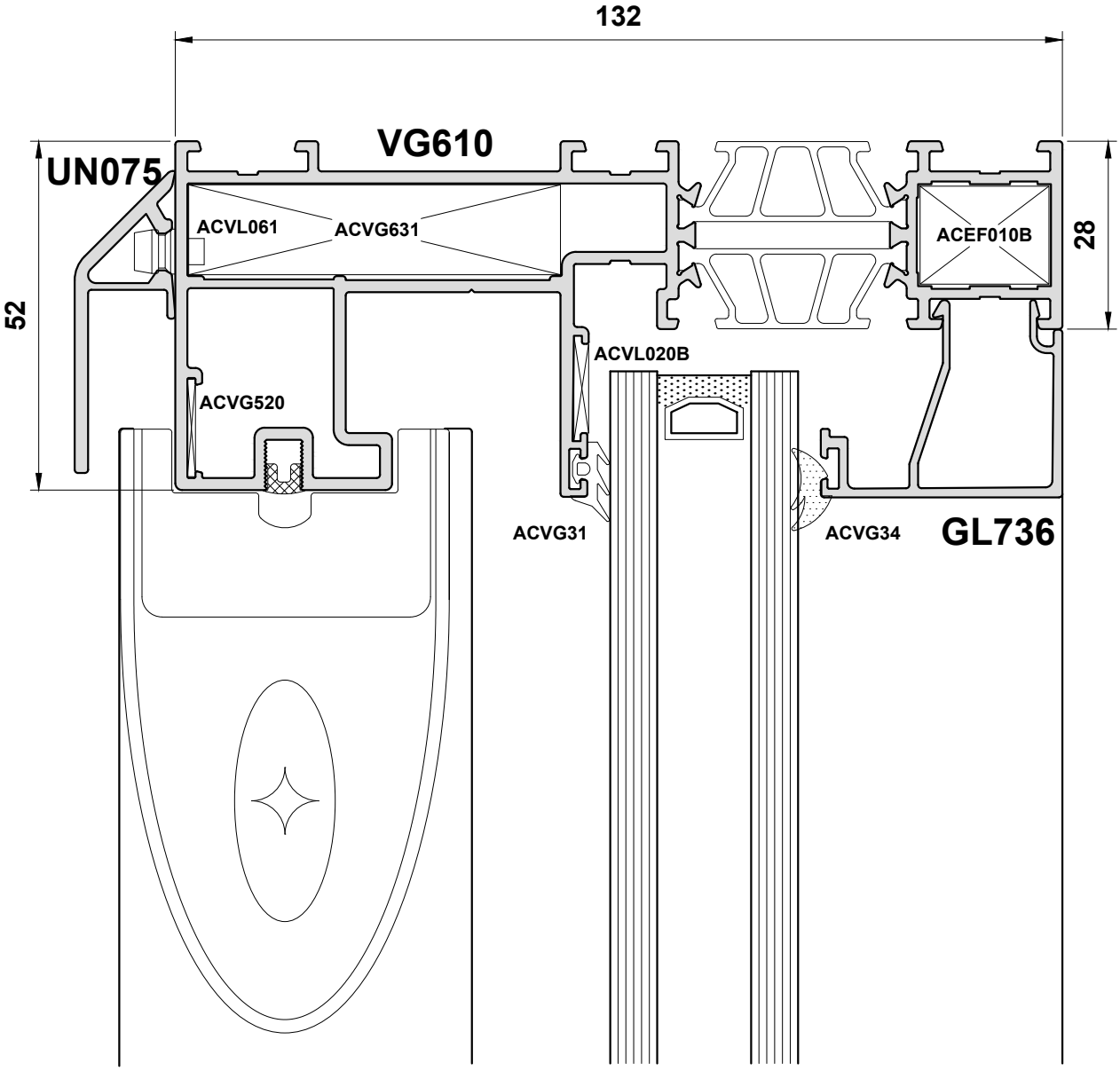

Do Not Scale From This Drawing

Do Not Scale From This Drawing

Section D

Statics

General Size Limitations are shown on Page A07.

**If in doubt, please contact
the technical department - T: 01934 876100**

Section D

GENERAL INFORMATION - STATICS

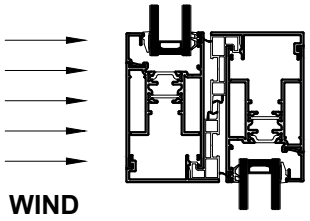

The position of the axes is an indication for the use and application of the moments of inertia (Ix and Iy) and the section modulus (Wx and Wy). We always choose the values of the axis perpendicular to the load to resist it.

- **To resist the wind loads we use the values Ix and Wx.**

EXAMPLE

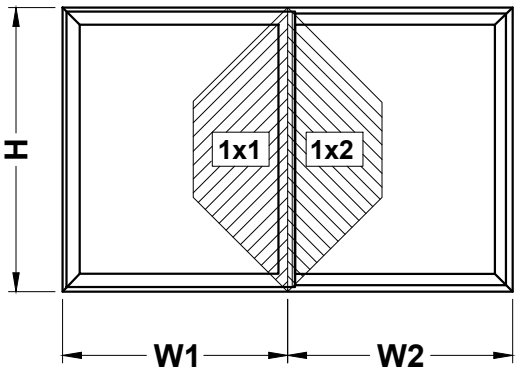

H = 250cm

W1 = 100cm

W2 = 100cm

P = 1000 Pa (wind pressure)

1) Determine Ixx value for the interlock and meeting stile (if required) using the Specification Wizard

Ixx = 58.1 cm4

2) Determine profile combinations

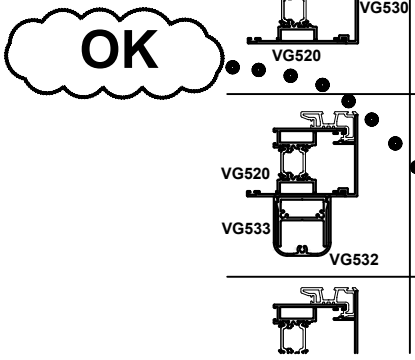

	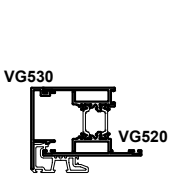	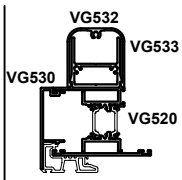	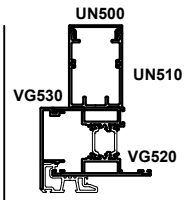
	52 cm4	88.5 cm4	111 cm4
	88 cm4	124 cm4	147 cm4

Do Not Scale From This Drawing

Section D

PROFILE COMBINATIONS - IX SLIDE : STATICS

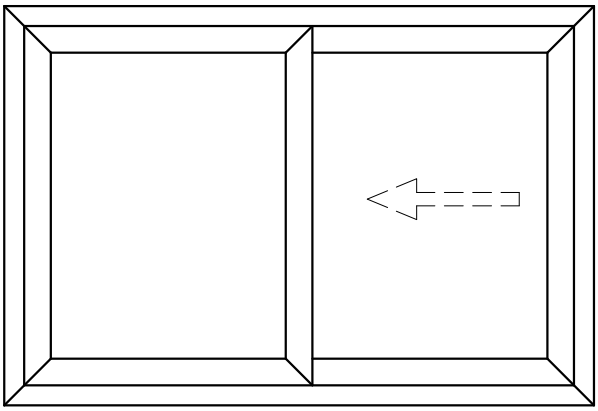

	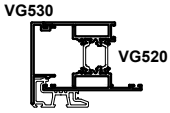	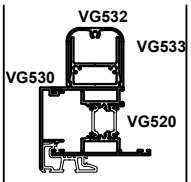	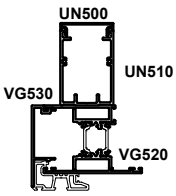	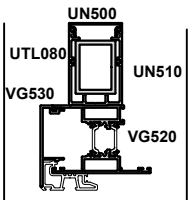
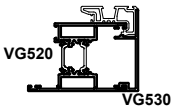	52 cm4	88.5 cm4	111 cm4	147 cm4
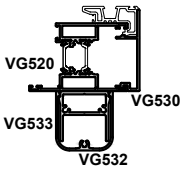	88 cm4	124 cm4	147 cm4	183 cm4
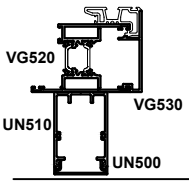	111 cm4	147 cm4	171 cm4	206 cm4
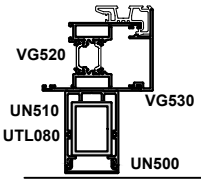	147 cm4	183 cm4	206 cm4	242 cm4

See Page D10 for Slim Interlock Mass Properties

Do Not Scale From This Drawing

Section D

PROFILE COMBINATIONS - IX SLIDE : STATICS

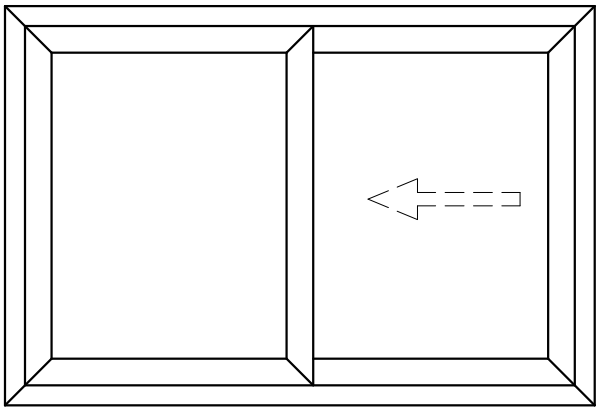

	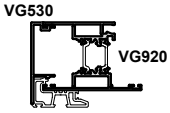	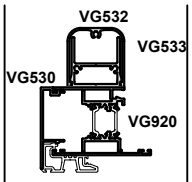	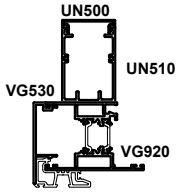	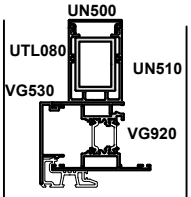
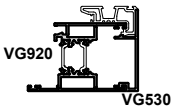	54 cm4	89 cm4	111 cm4	148 cm4
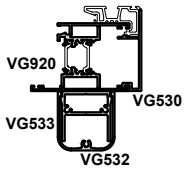	89 cm4	124 cm4	146 cm4	184 cm4
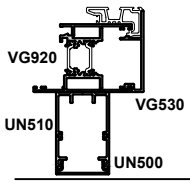	111 cm4	146 cm4	168 cm4	206 cm4
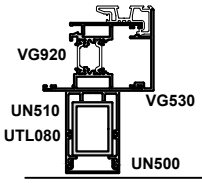	148 cm4	184 cm4	206 cm4	243 cm4

See Page D10 for Slim Interlock Mass Properties

Do Not Scale From This Drawing

Section D

PROFILE COMBINATIONS - IX LIFTSLIDE : STATICS

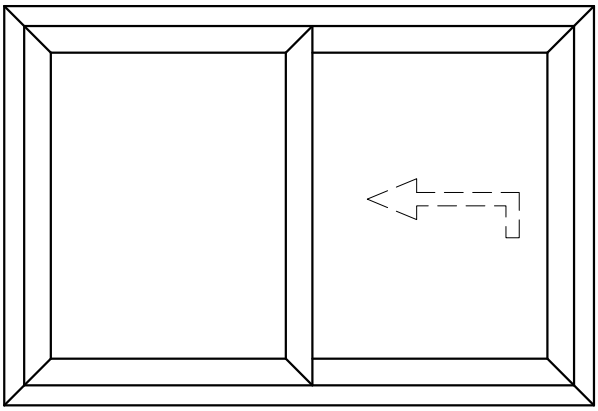

	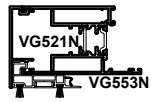	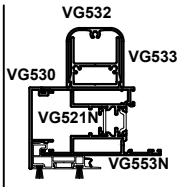	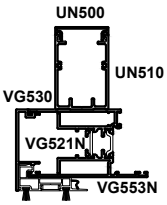	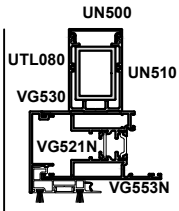
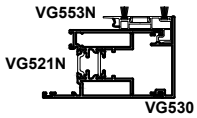	67 cm4	102 cm4	125 cm4	169 cm4
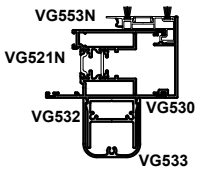	102 cm4	137 cm4	160 cm4	204 cm4
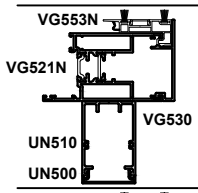	125 cm4	160 cm4	184 cm4	227 cm4
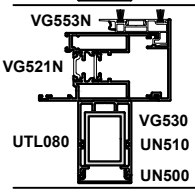	169 cm4	204 cm4	227 cm4	271 cm4

See Page D10 for Slim Interlock Mass Properties

Do Not Scale From This Drawing

Section D

PROFILE COMBINATIONS - IX LIFTSLIDE : STATICS

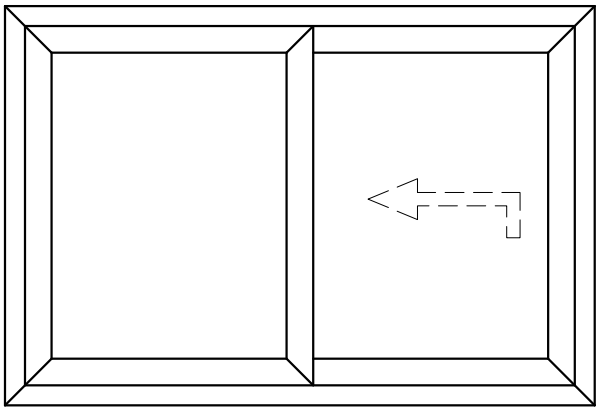

	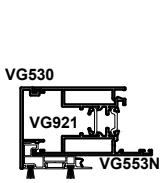	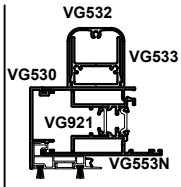	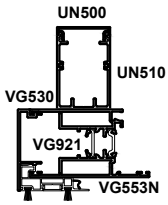	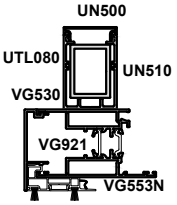
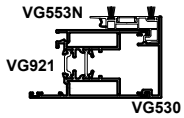	60 cm4	99 cm4	122 cm4	166 cm4
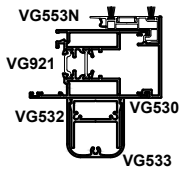	99 cm4	137 cm4	161 cm4	205 cm4
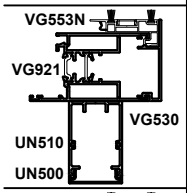	122 cm4	161 cm4	184 cm4	228 cm4
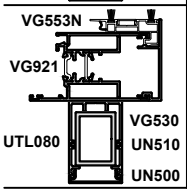	166 cm4	205 cm4	228 cm4	272 cm4

See Page D10 for Slim Interlock Mass Properties

Do Not Scale From This Drawing

Section D

PROFILE COMBINATIONS - IX-MONO-SLIDE : STATICS

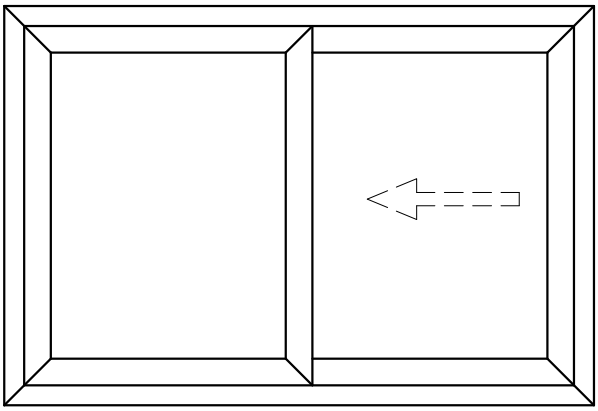

	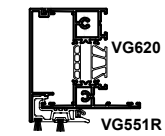	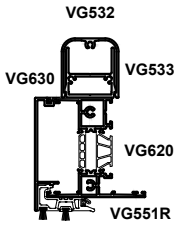	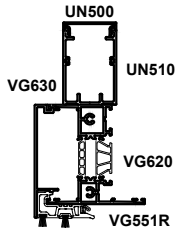	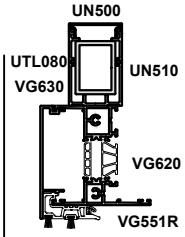
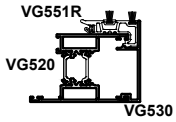	92 cm4	156 cm4	191 cm4	253 cm4
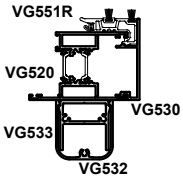	128 cm4	192 cm4	227 cm4	289 cm4
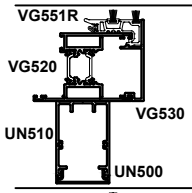	151 cm4	215 cm4	251 cm4	312 cm4
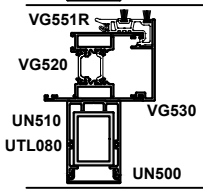	187 cm4	251 cm4	286 cm4	348 cm4

Do Not Scale From This Drawing

Section D

PROFILE COMBINATIONS - IX-MONO-SLIDE : STATICS

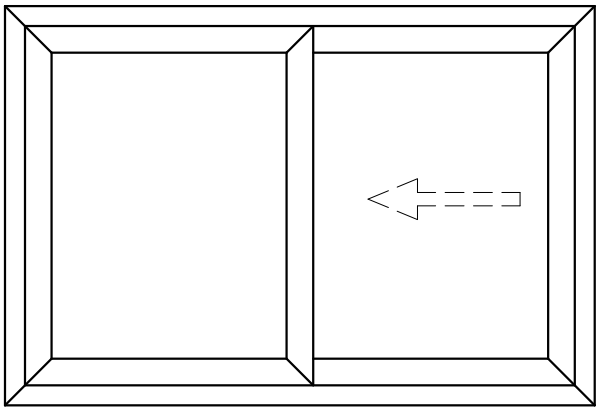

	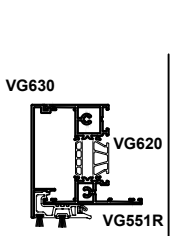	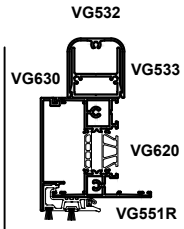	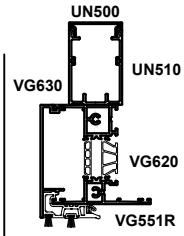	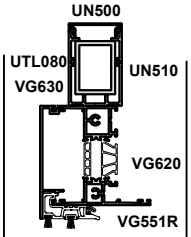
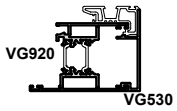	93 cm4	157 cm4	192 cm4	254 cm4
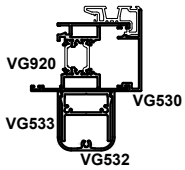	128 cm4	192 cm4	228 cm4	289 cm4
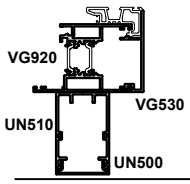	150 cm4	214 cm4	250 cm4	311 cm4
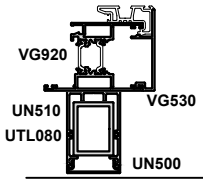	188 cm4	252 cm4	287 cm4	349 cm4

Do Not Scale From This Drawing

Section D

PROFILE COMBINATIONS - IX MONO-LIFTSLIDE : STATICS

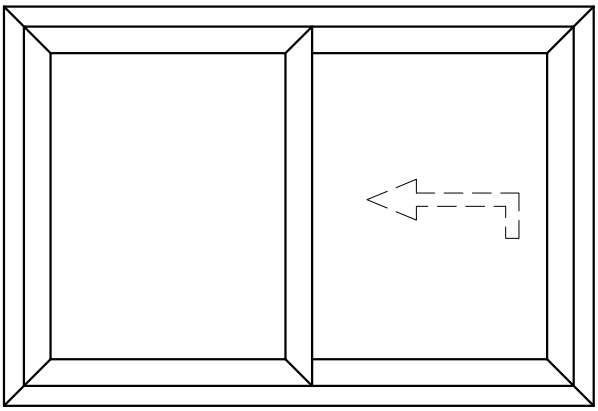

	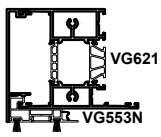	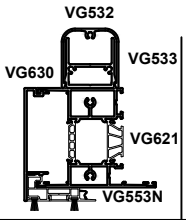	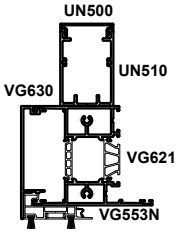	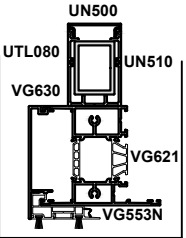
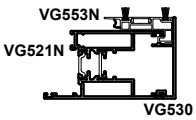	109 cm4	176 cm4	214 cm4	287 cm4
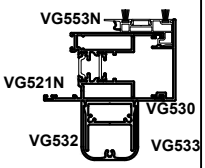	144 cm4	211 cm4	249 cm4	322 cm4
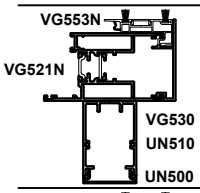	168 cm4	235 cm4	273 cm4	346 cm4
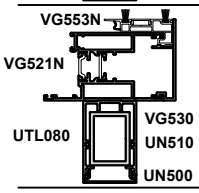	211 cm4	278 cm4	316 cm4	389 cm4

Do Not Scale From This Drawing

Section D

PROFILE COMBINATIONS - IX MONO-LIFTSLIDE : STATICS

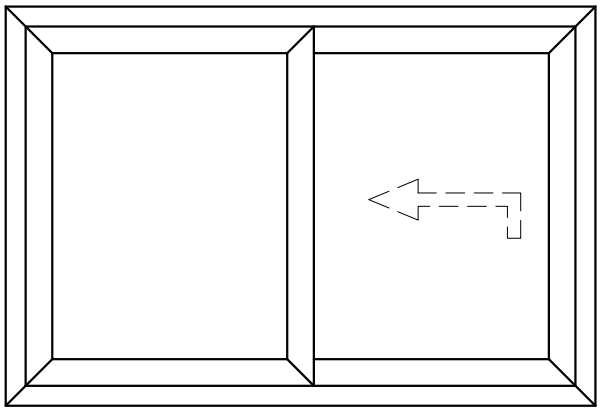

	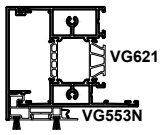	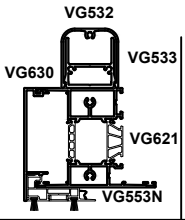	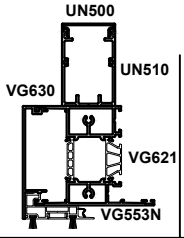	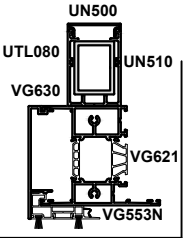
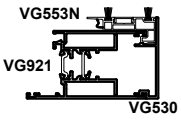	106 cm4	173 cm4	211 cm4	284 cm4
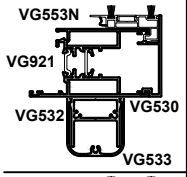	145 cm4	212 cm4	250 cm4	323 cm4
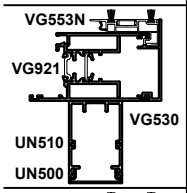	168 cm4	235 cm4	273 cm4	346 cm4
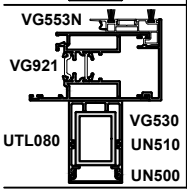	212 cm4	279 cm4	317 cm4	390 cm4

Do Not Scale From This Drawing

Section D

PROFILE COMBINATIONS - IX-SLIM INTERLOCKS : STATICS

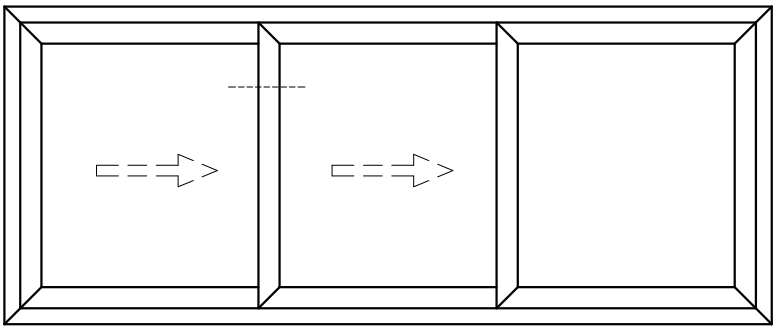

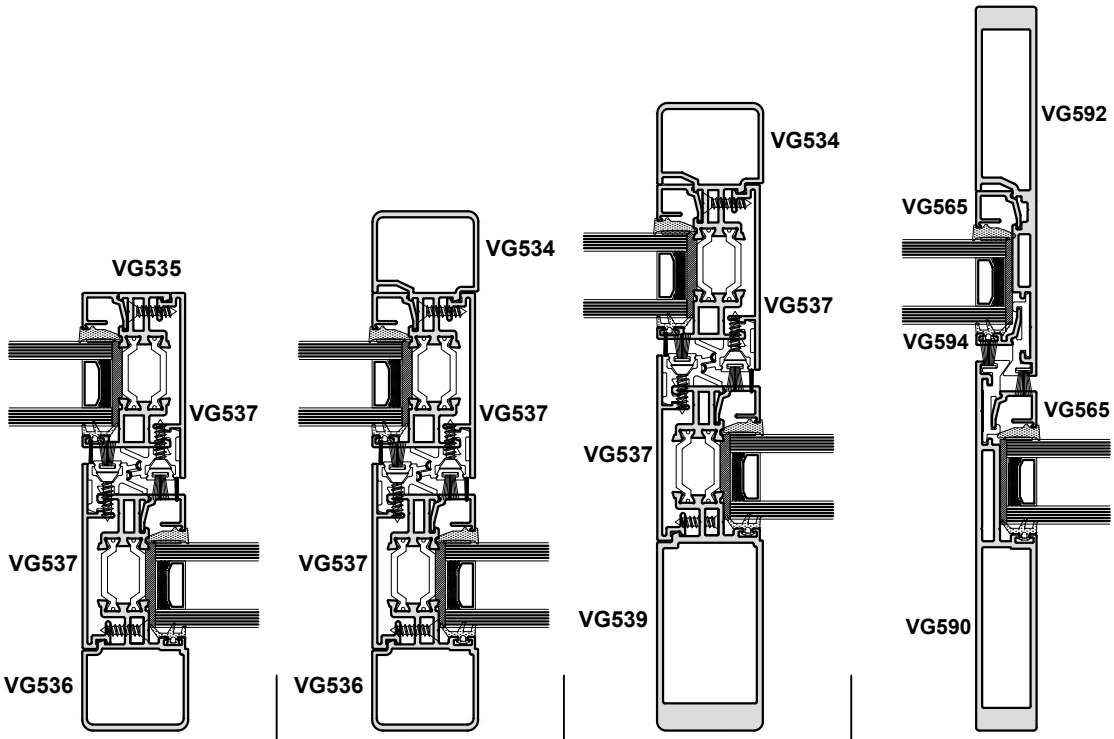

49 cm4	73 cm4	182 cm4	155 cm4 *

* Important Note:
For exposed locations, please contact the Technical Department at Smart Systems Ltd Tel: 01934 876100

Do Not Scale From This Drawing

Section D

PROFILE COMBINATIONS - IX-DOUBLE DOOR : STATICS

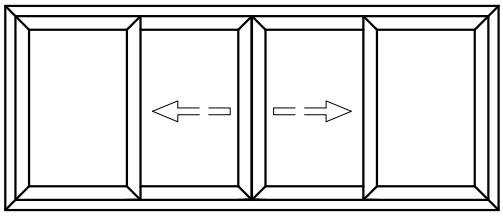

	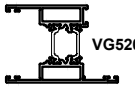				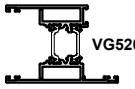
	59 cm4	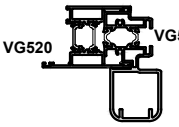	127 cm4	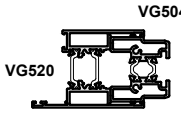	49 cm4
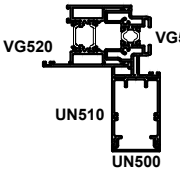	142 cm4		58 cm4	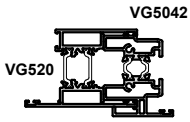	58 cm4
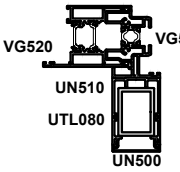	210 cm4	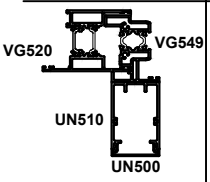	142 cm4	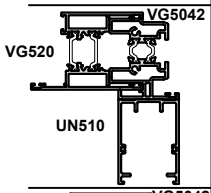	142 cm4
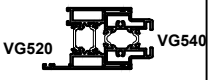	48 cm4	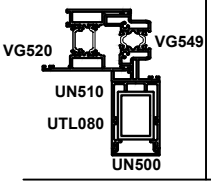	209 cm4	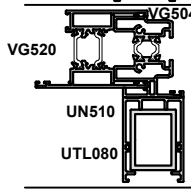	207 cm4

Do Not Scale From This Drawing

Section D

PROFILE COMBINATIONS - IX-DOUBLE DOOR : STATICS

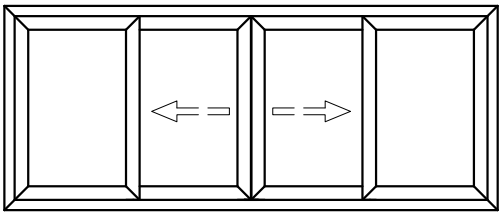

	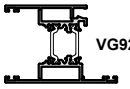		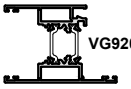		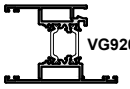
	59 cm4	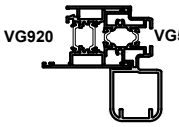	128 cm4	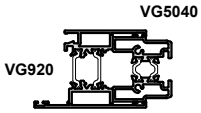	49 cm4
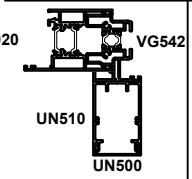	149 cm4		59 cm4	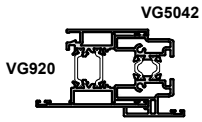	58 cm4
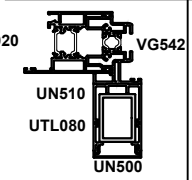	217 cm4	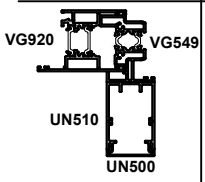	149 cm4	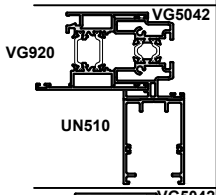	143 cm4
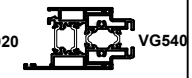	49 cm4	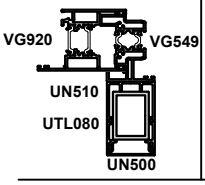	217 cm4	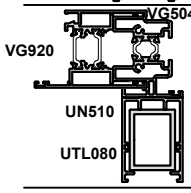	208 cm4

Do Not Scale From This Drawing

Section D

PROFILE COMBINATIONS - IX-DOUBLE DOOR : STATICS

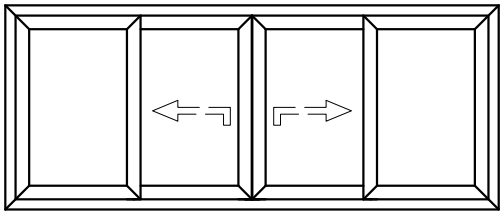

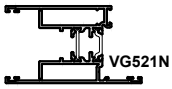	
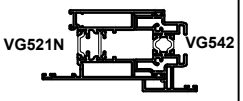	70 cm4
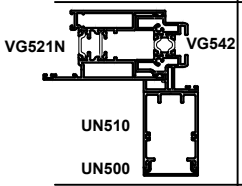	157 cm4
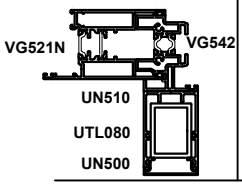	230 cm4

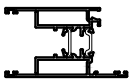	
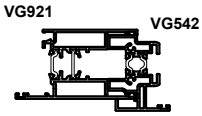	67 cm4
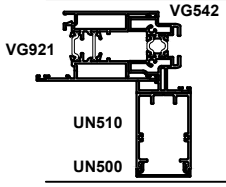	160 cm4
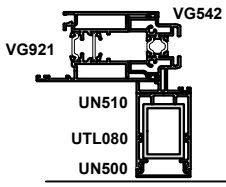	233 cm4

Do Not Scale From This Drawing

Section D

Do Not Scale From This Drawing

Section E

Construction Drawings

E VG+

ACVG905N Punch Tool Sections

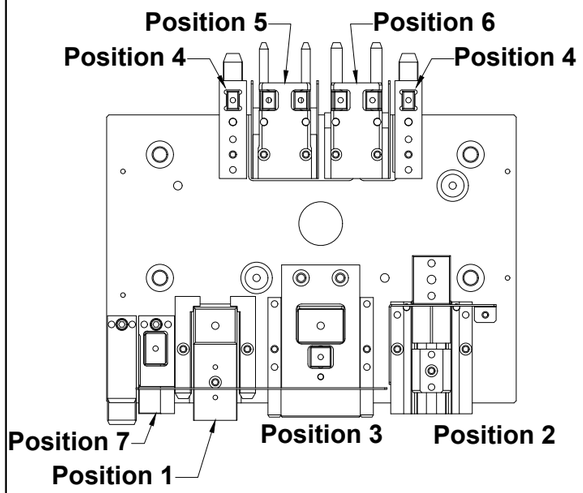

Please Note:
VG920 can only be punched using ACVG905N.

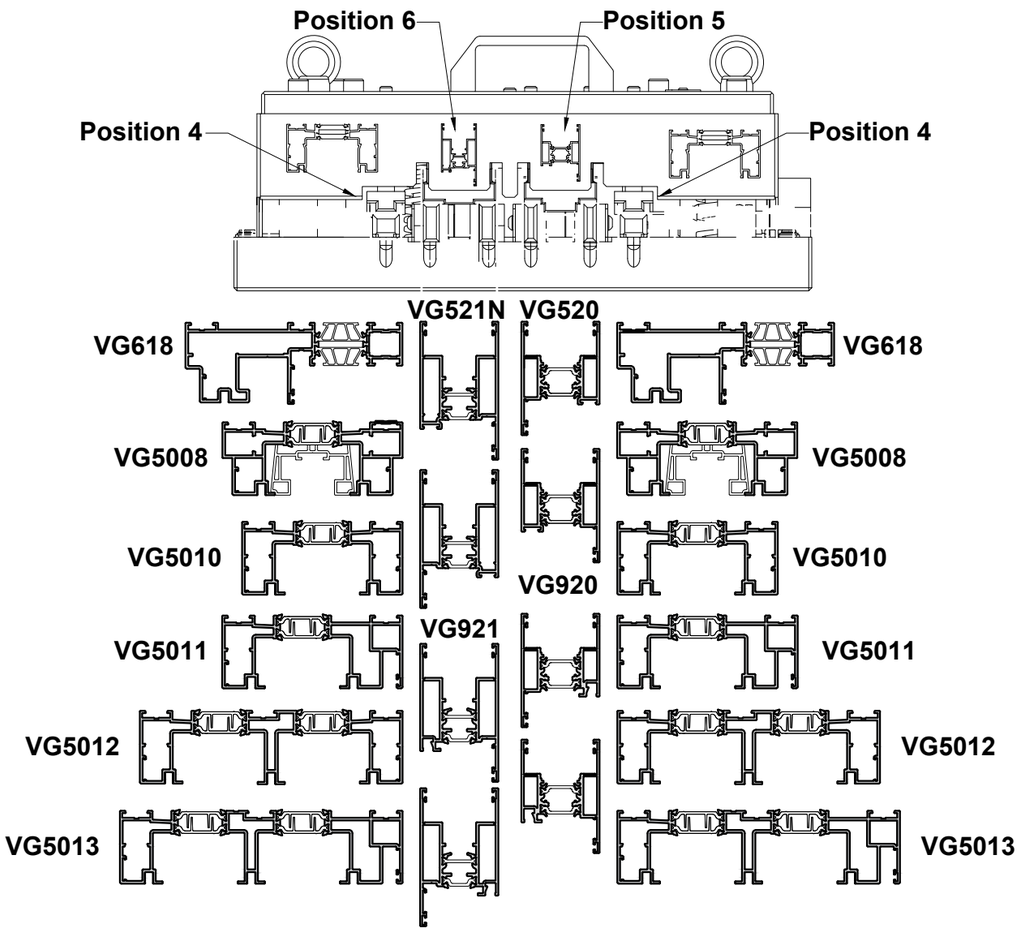

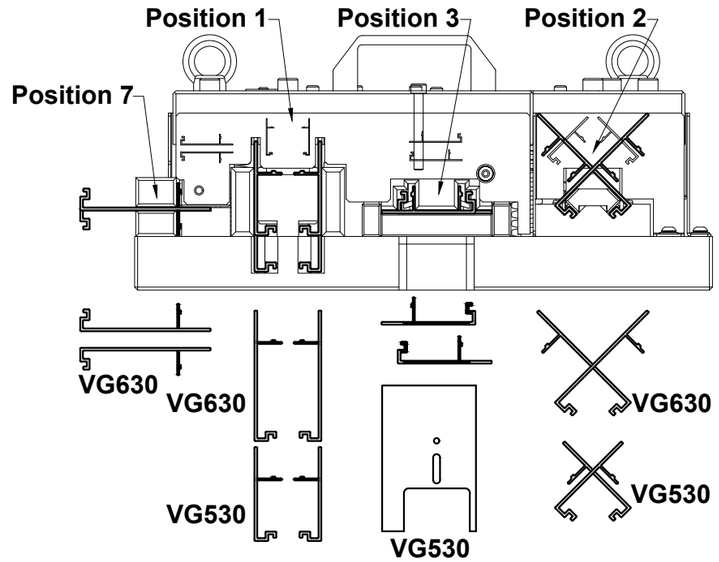

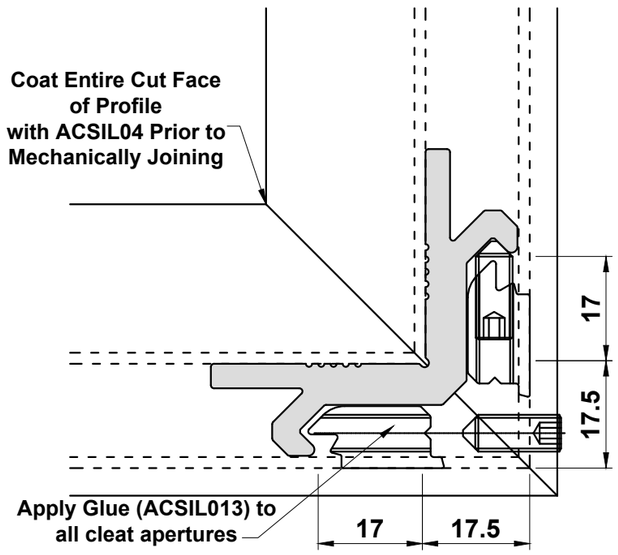

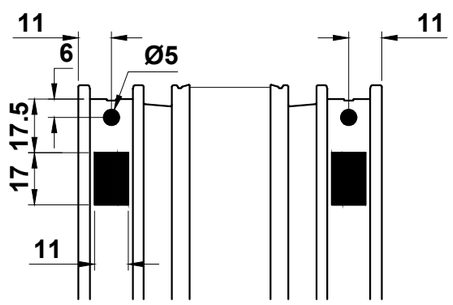

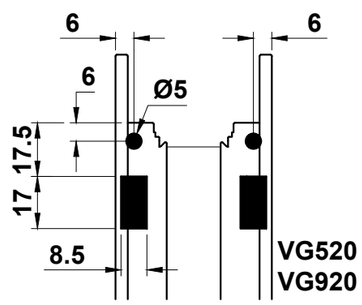

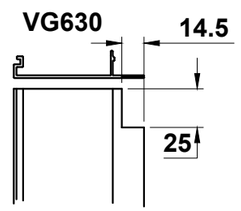

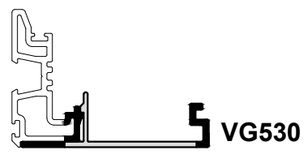

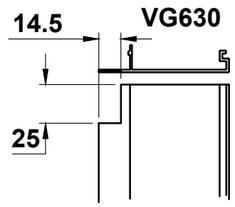

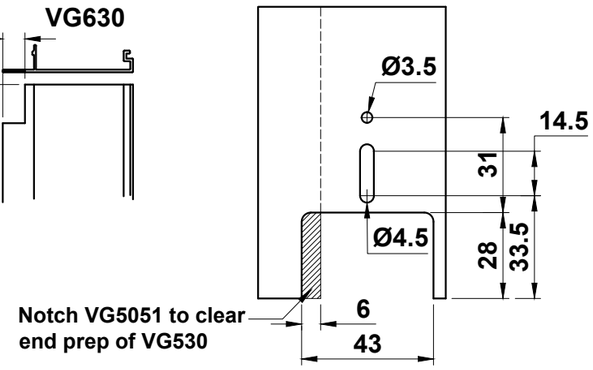

Do Not Scale From This Drawing

ACVG908 Punch Tool Details HYB

ACVG908

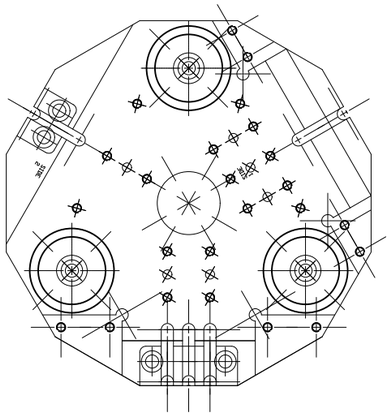

VG5016

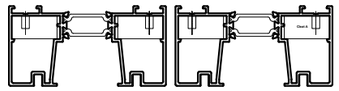

VG5017

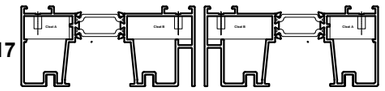

VG5017

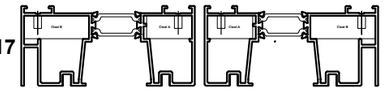

VG5018

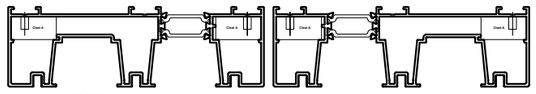

VG5018

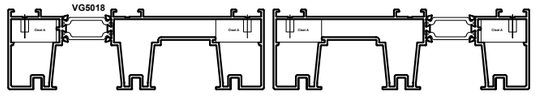

VG5019

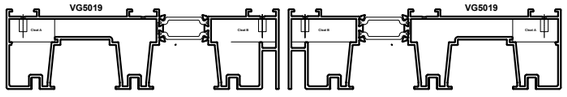

VG5019

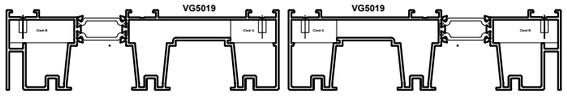

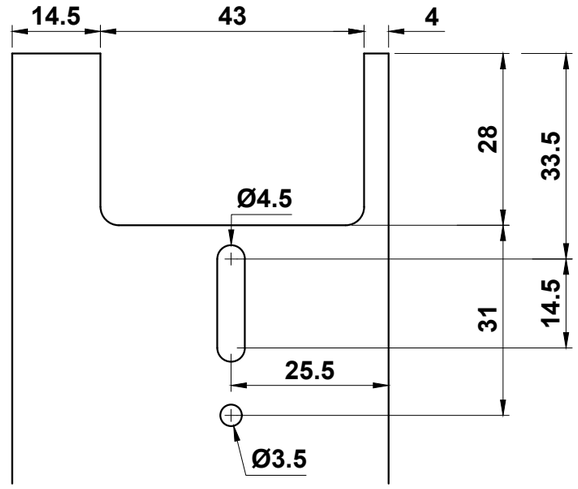

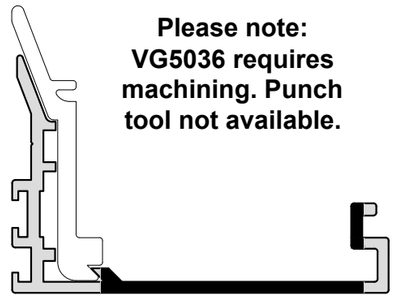

Please note: VG5036 requires machining. Punch tool not available.

VG5036

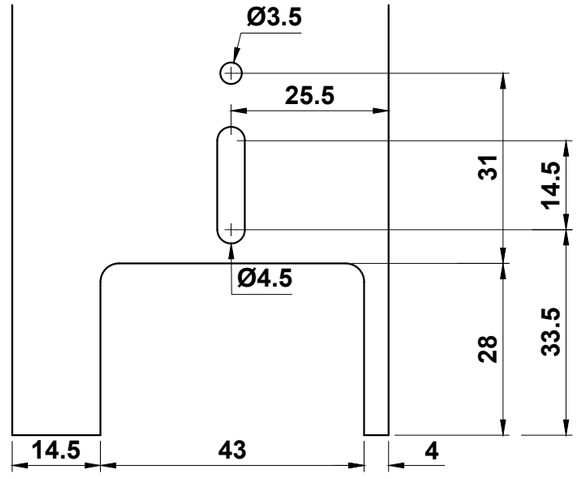

Do Not Scale From This Drawing

ACDV916 Punch Tool Sections

Some Cylinder/Spindle preparations will interfere with VG960 bead and will require notching.
Please use ACDV916 bead notching punch tool.

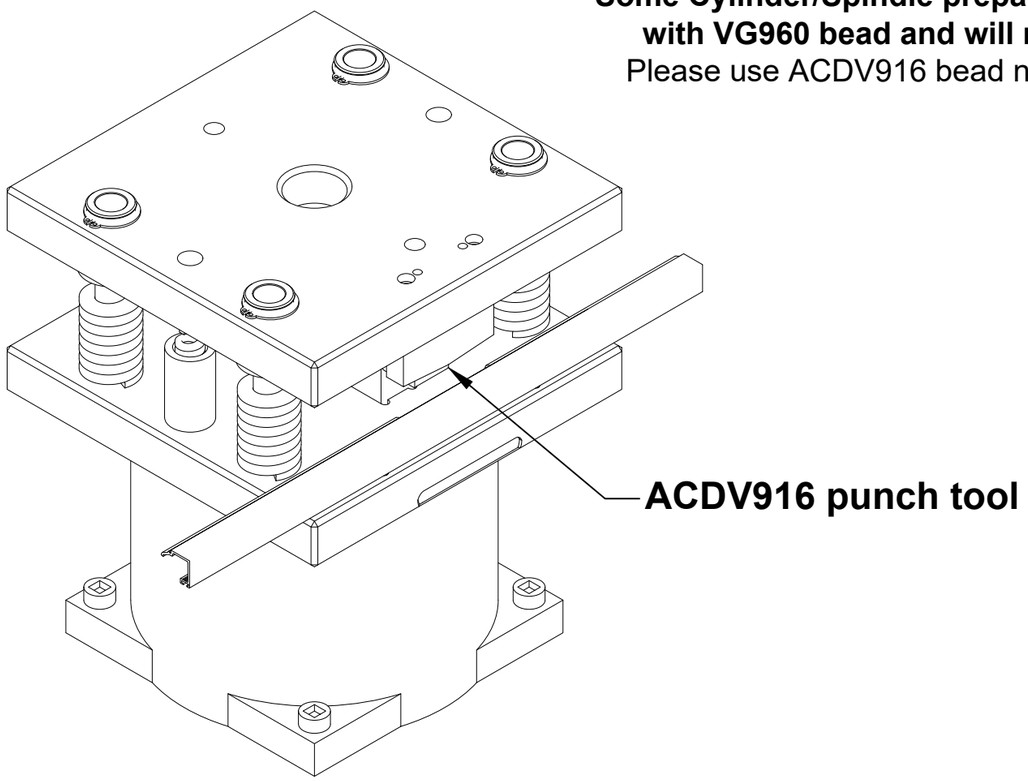

VG960/VG960G prep

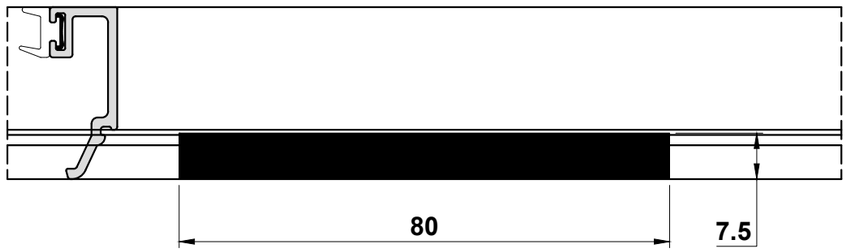

Please contact Technical Department for further information.

Do Not Scale From This Drawing

Outer Frame Drainage Details

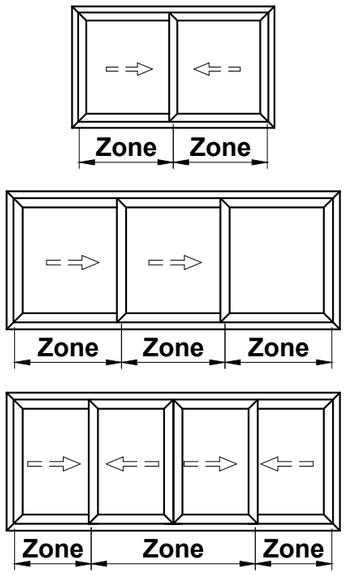

To avoid notching the VG5050, notch the woolpile at the bottom of the sash (25 mm wide, positioned 100 mm from each sash corner).

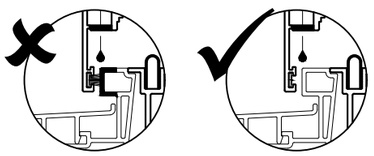

When using sloped track covers VG7075 is not required. Please drain as shown:

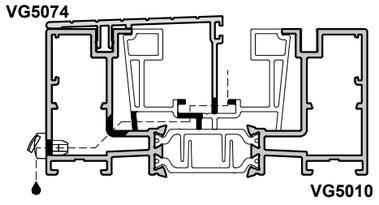

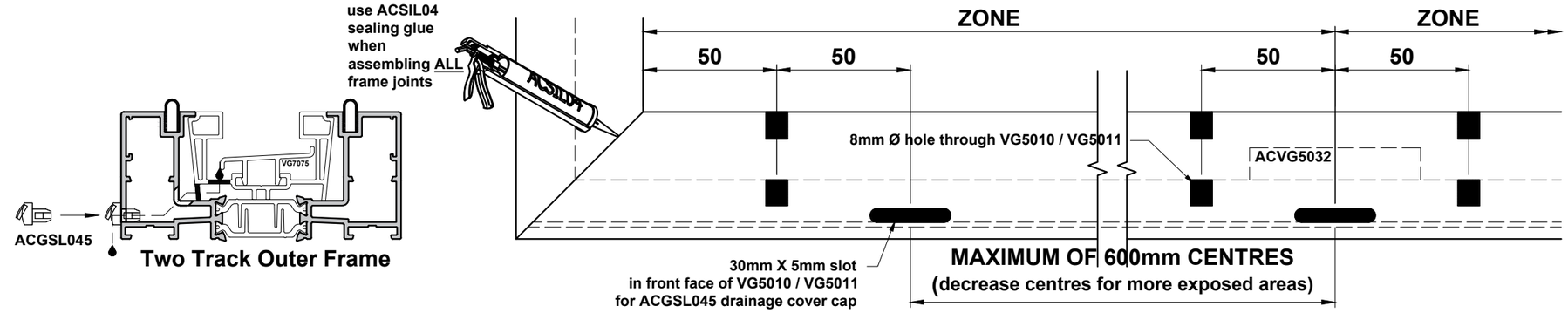

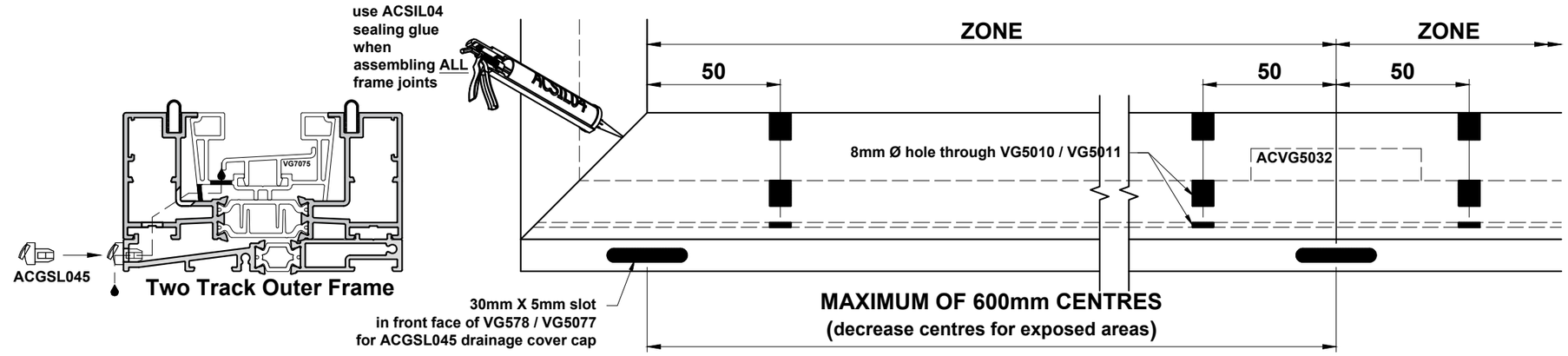

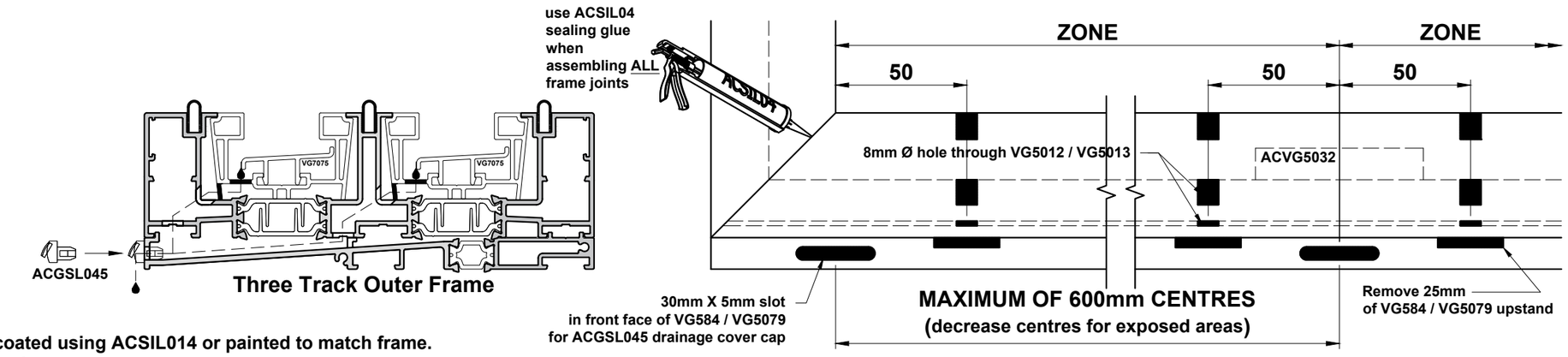

*After machining, all exposed aluminium should be coated using ACSIL014 or painted to match frame.
(Consider all following sheets where machining occurs)

Do Not Scale From This Drawing

Outer Frame Drainage Details HYB

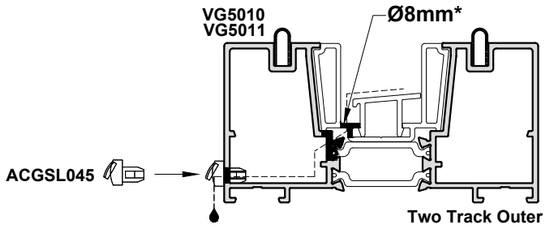

*Drill jig ACVG952 may be used for the Ø8mm downward drainage. Drill a 5mm hole then open to 8mm.

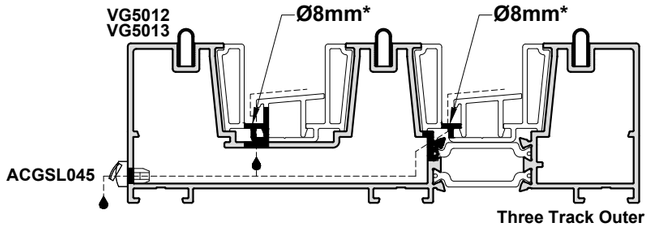

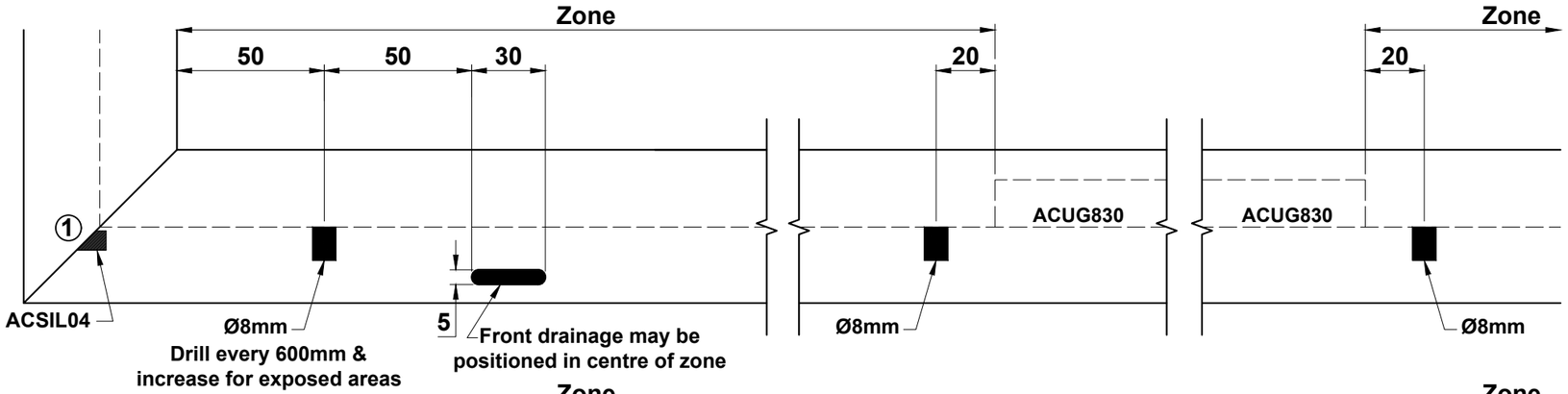

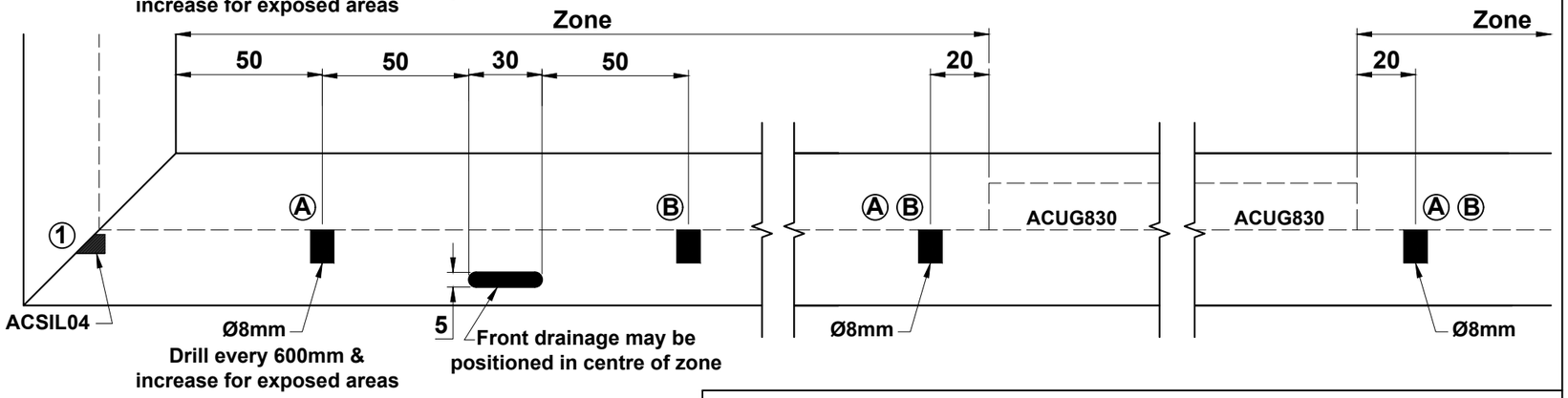

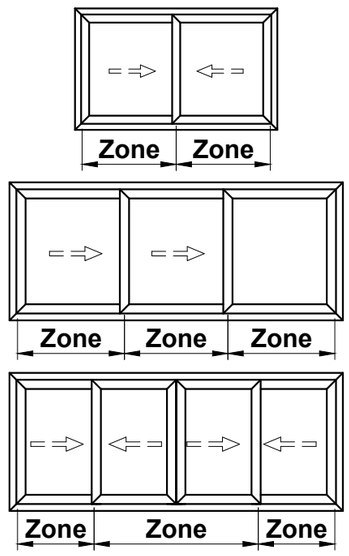

*After machining, all exposed aluminium should be coated using ACSIL014 or painted to match frame. (Consider all following sheets where machining occurs)

Alternative Drainage Method

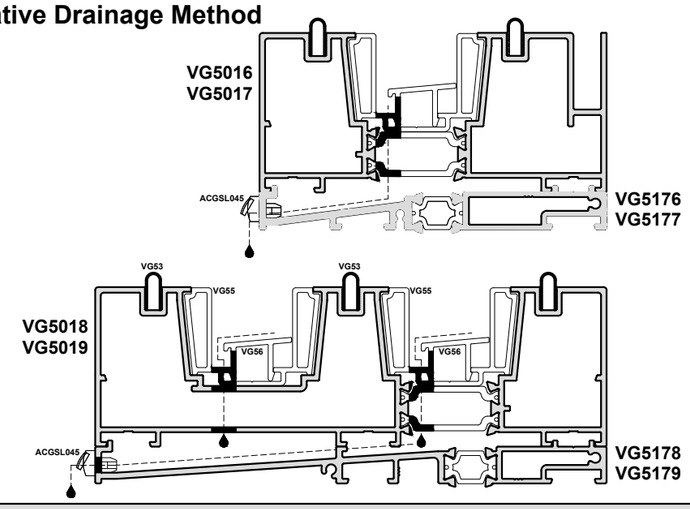

Do Not Scale From This Drawing

Cill Drainage Details

IMPORTANT NOTE: VG5012 CAN ONLY BE USED WITH THE VG5079 FLUSH DRAINAGE TRAY

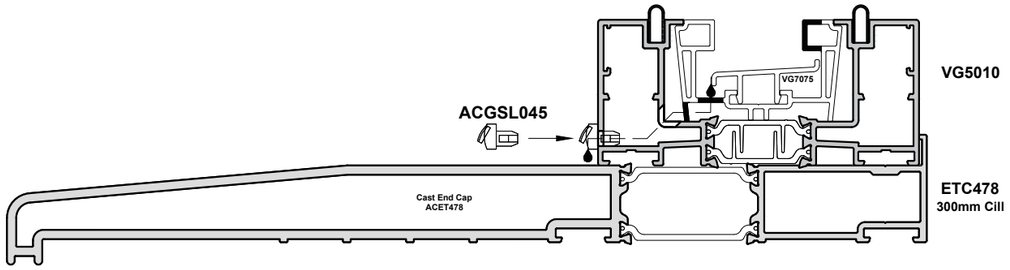

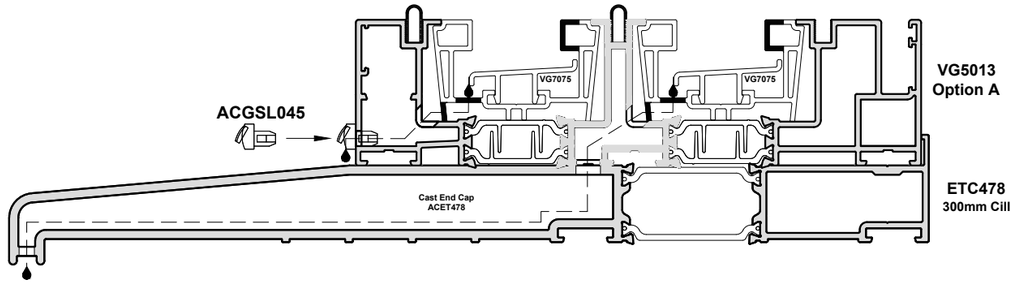

Important Fabrication Notes:
Use the drainage spacings shown on page E06

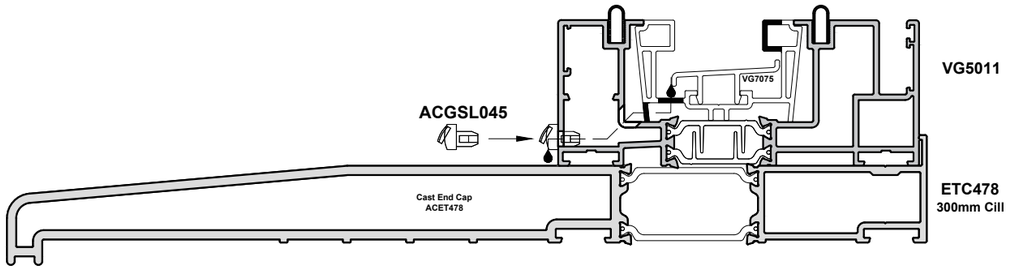

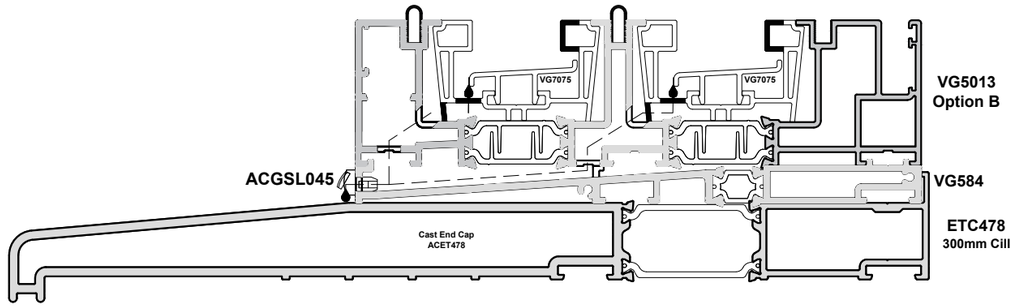

Do Not Scale From This Drawing

Flush Drainage Tray Details

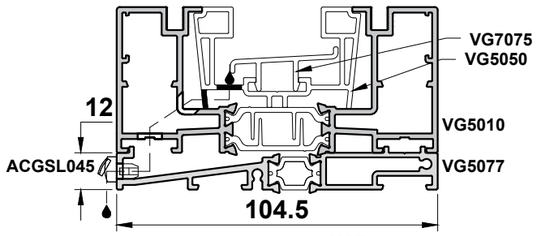

End Cap = ACVG5077

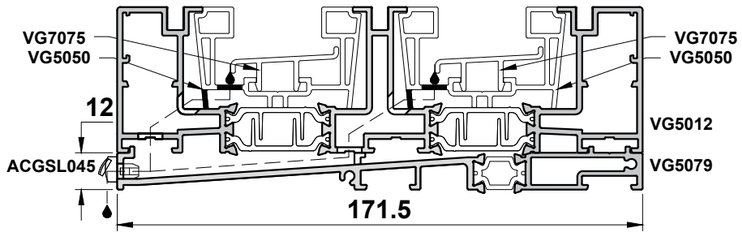

End Cap = ACVG5079

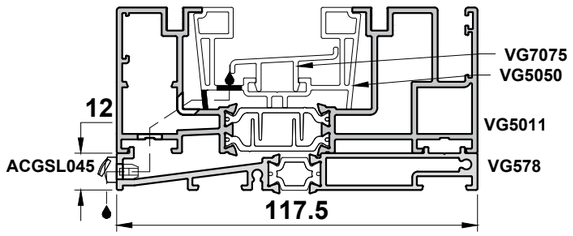

End Cap = ACVG578

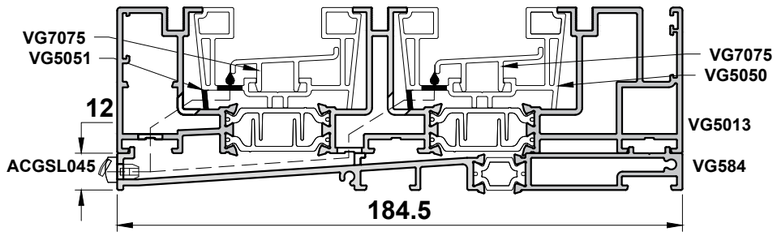

End Cap = ACVG584

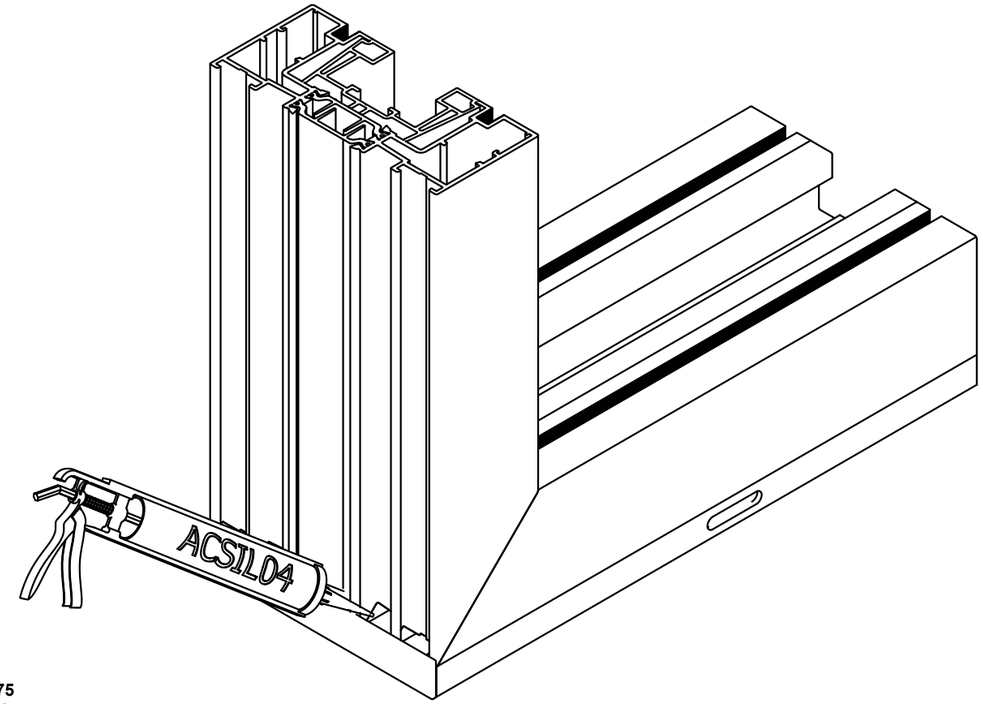

Seal end caps using ACSIL04

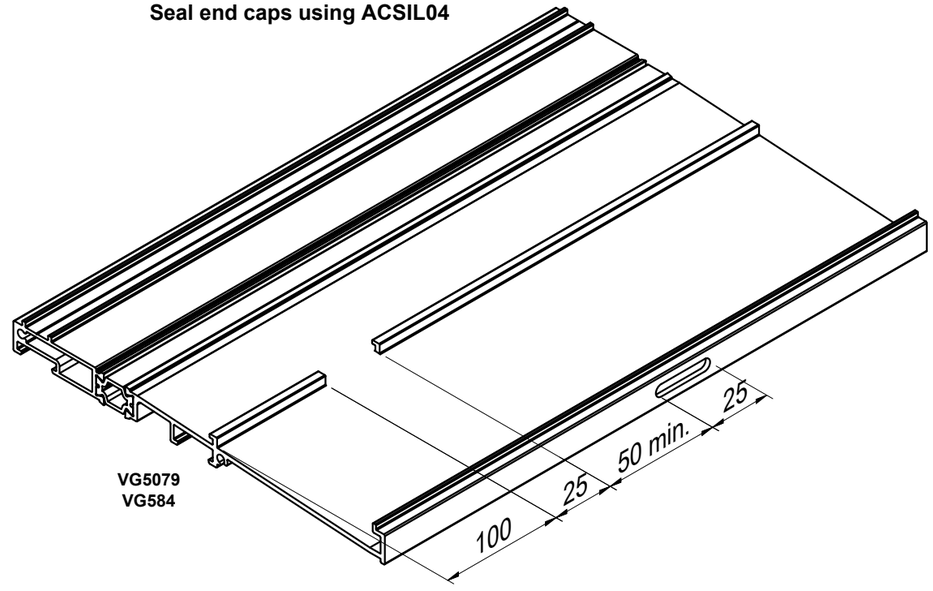

Do Not Scale From This Drawing

Vent Drainage & Equalisation

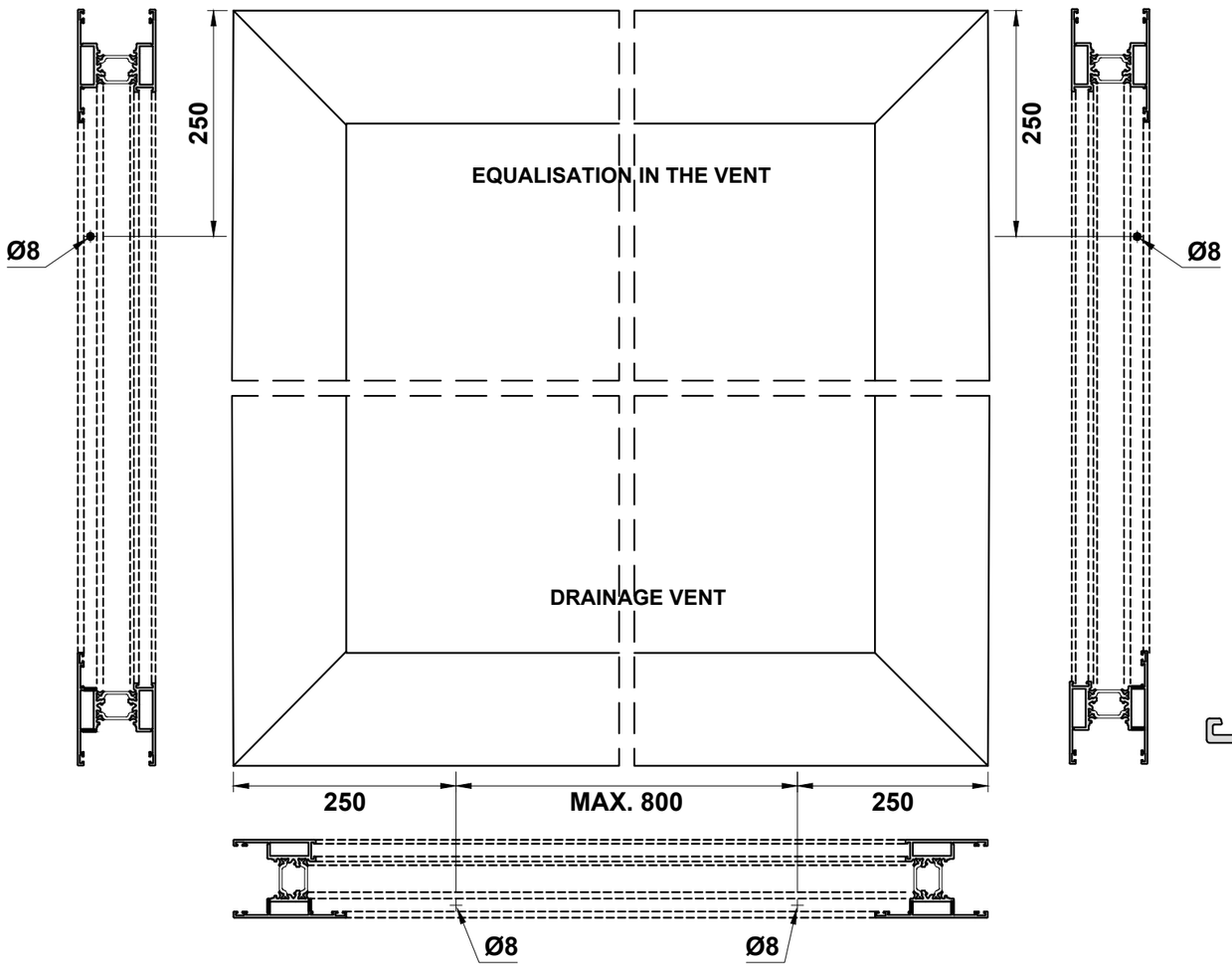

Equalisation

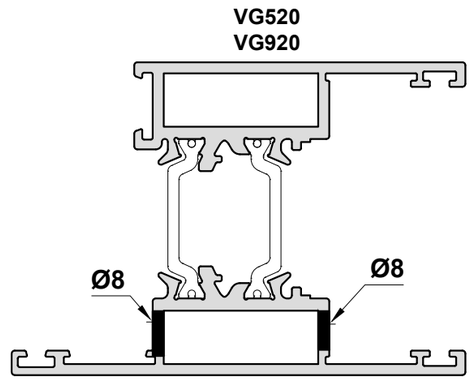

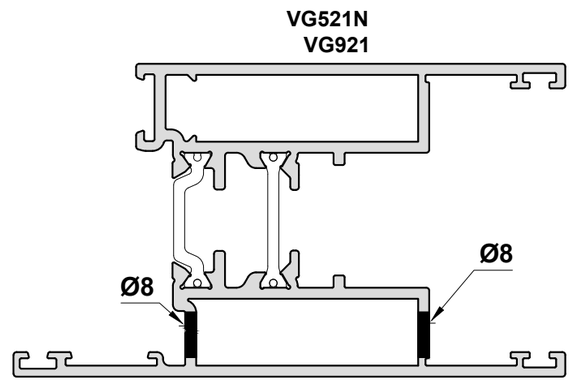

Drainage

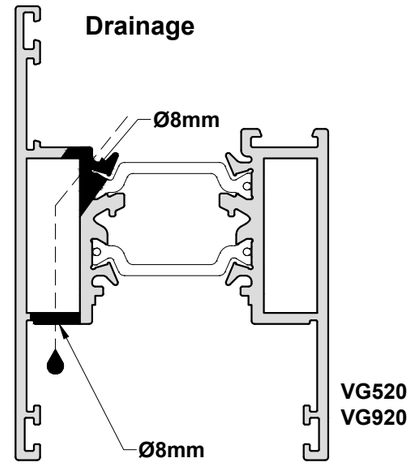

Drill at slight angle. We recommend first drilling a 3mm pilot hole.

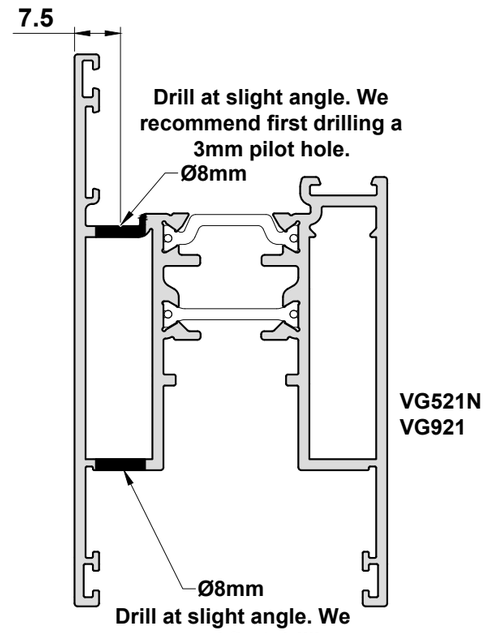

Drill at slight angle. We recommend first drilling a 3mm pilot hole.

Do Not Scale From This Drawing

Vent Drainage & Equalisation

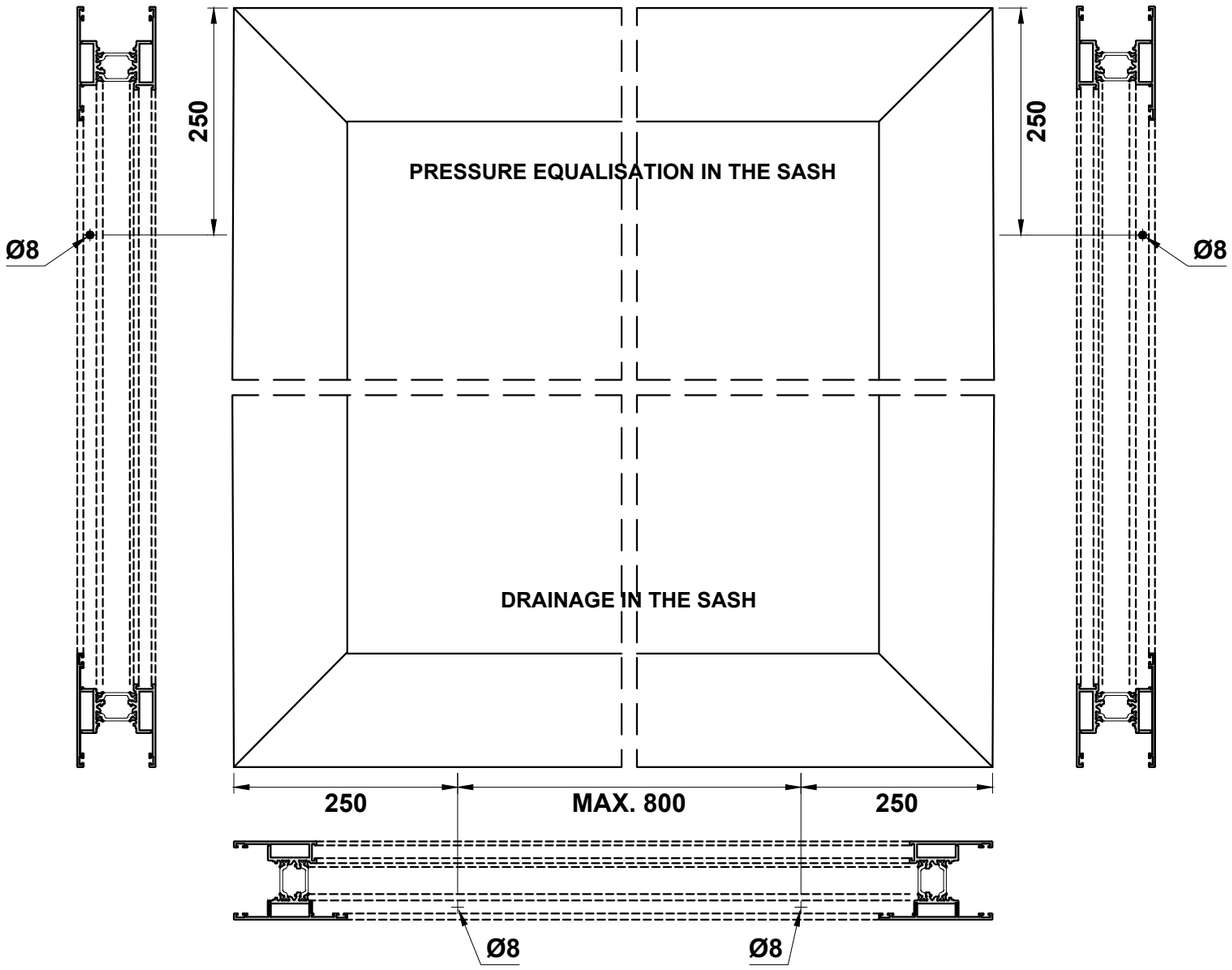

Pressure Equalisation

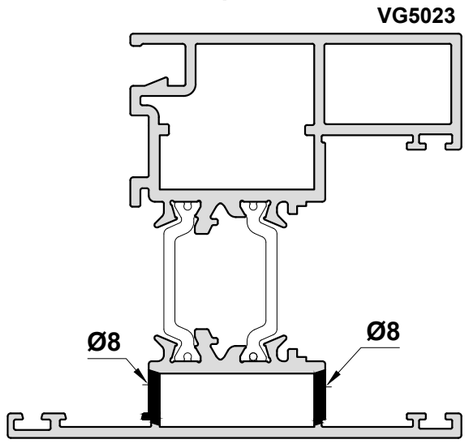

Drainage

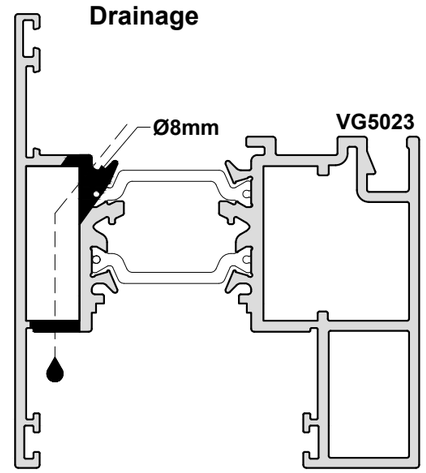

Pressure Equalisation

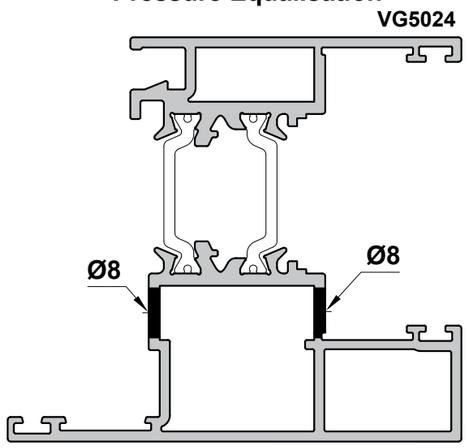

Drainage

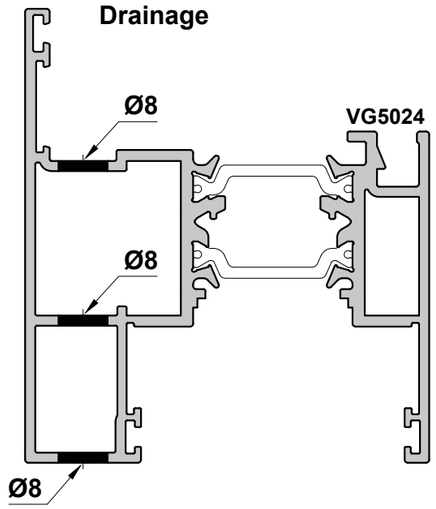

Do Not Scale From This Drawing

VG538 Sash Transom

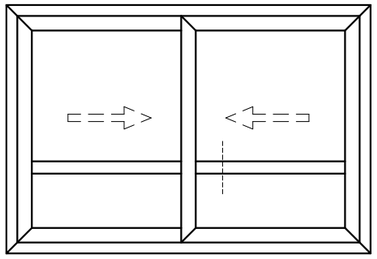

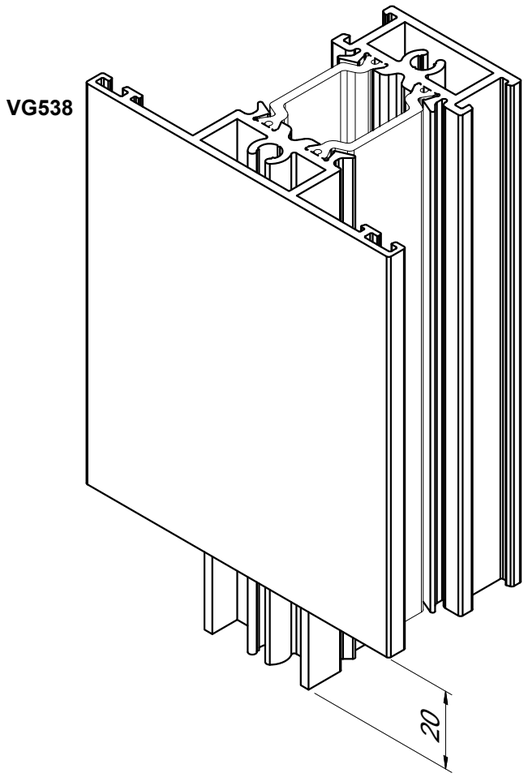

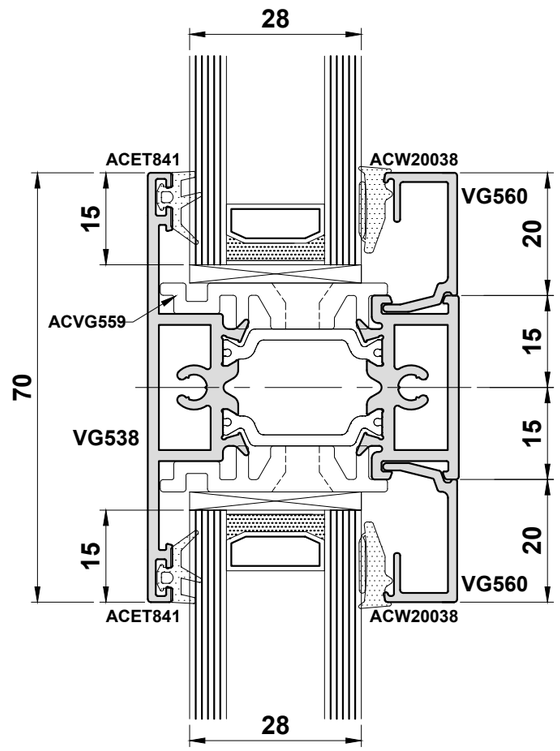

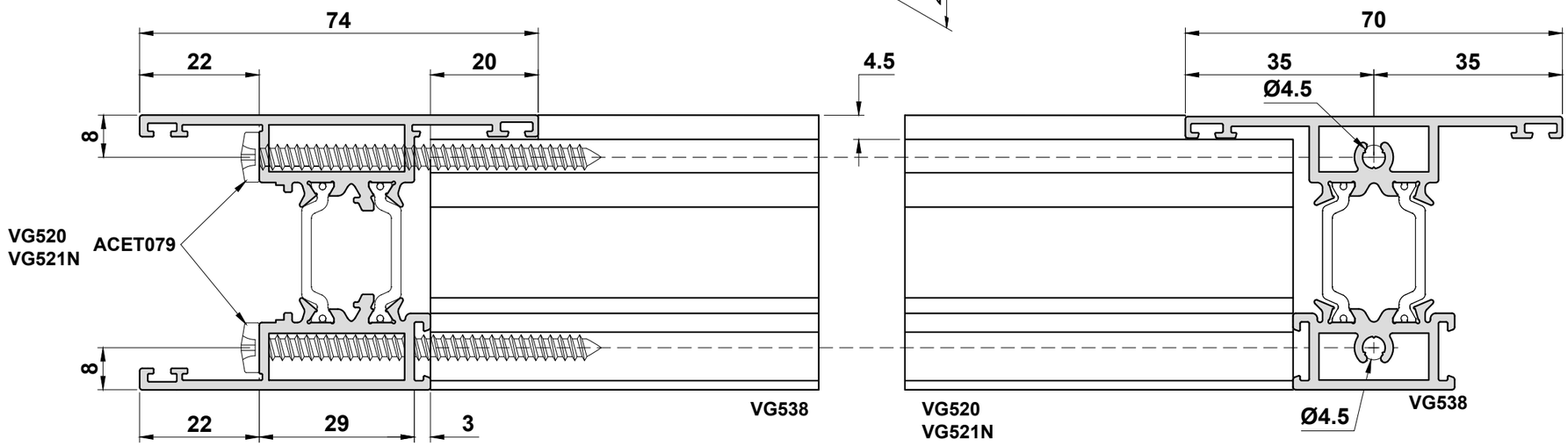

Please Note:
VG538 is not compatible with VG920 or VG921.

Do Not Scale From This Drawing

ACVG555 & ACVG565 Roller Preparation & Fixing - Slide

ACVG555 Adjustable Roller

Max Sash Weight: 250kg

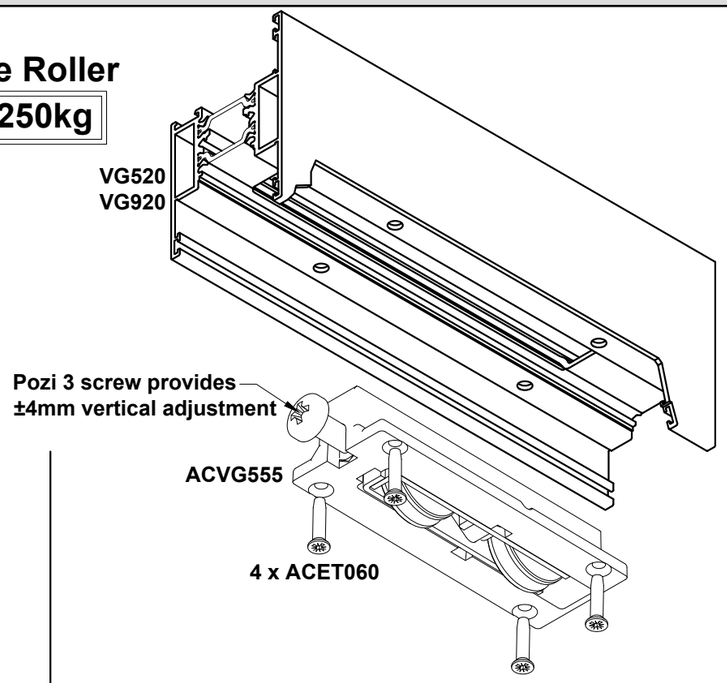

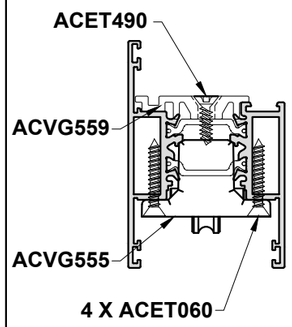

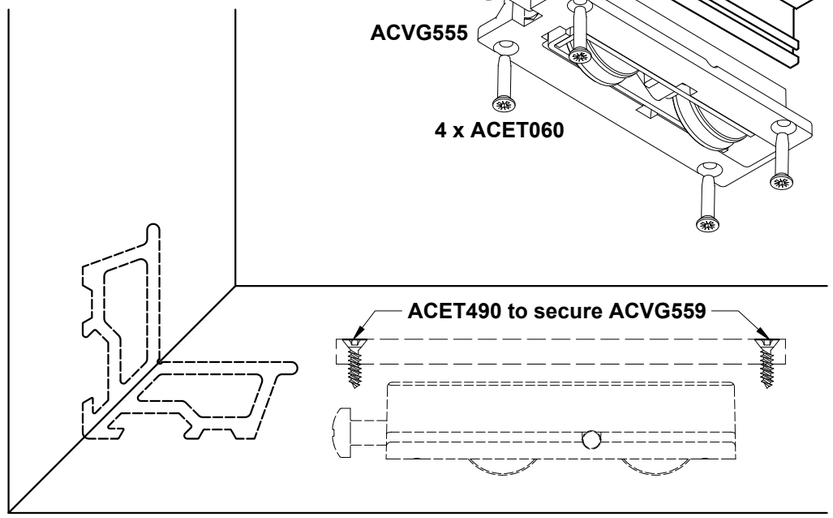

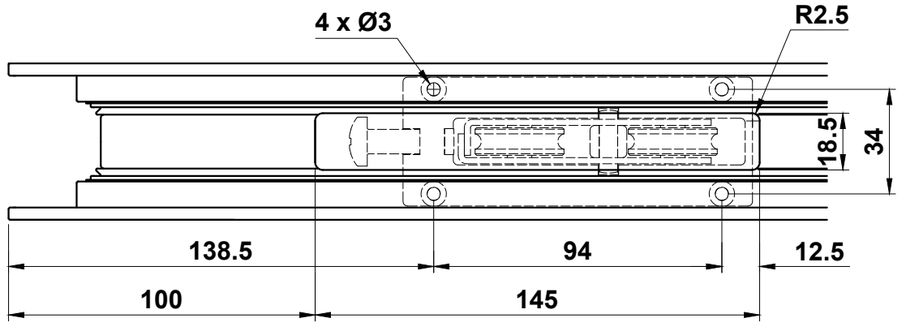

ACVG565 Fixed Roller

Max Sash Weight: 250kg

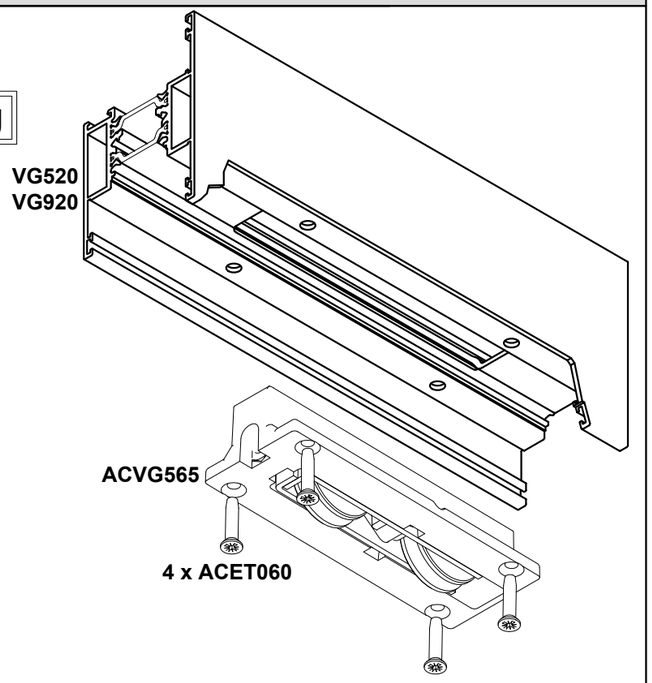

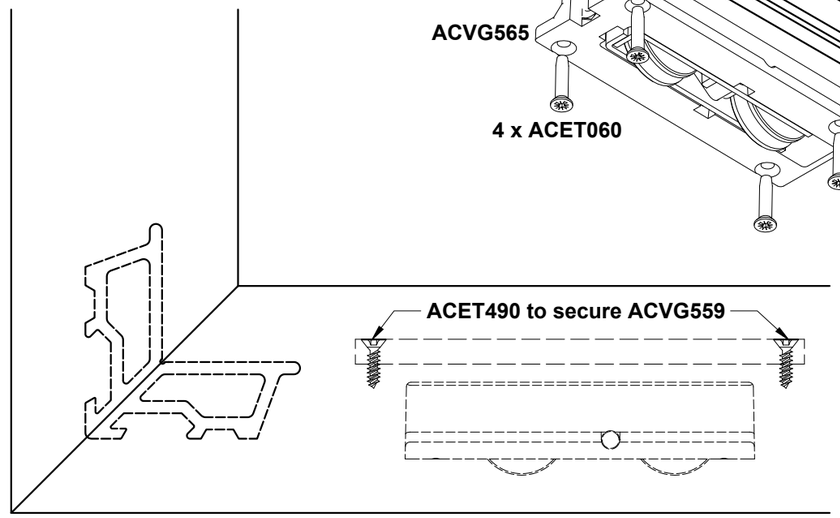

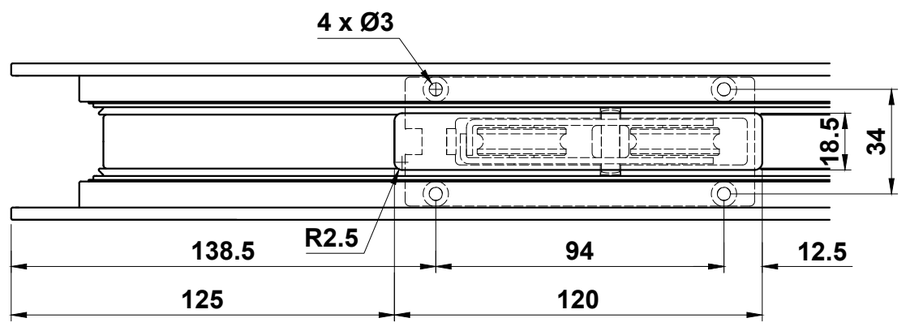

Do Not Scale From This Drawing

ACVG555 & ACVG565 Roller Preparation & Fixing - Lift & Slide

ACVG555 Adjustable Roller (shown) or
ACVG565 Fixed Roller

Max Sash Weight: 250kg

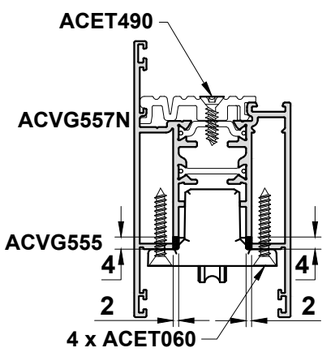

Remove 4mm of inside chamber to allow roller to sit correctly.

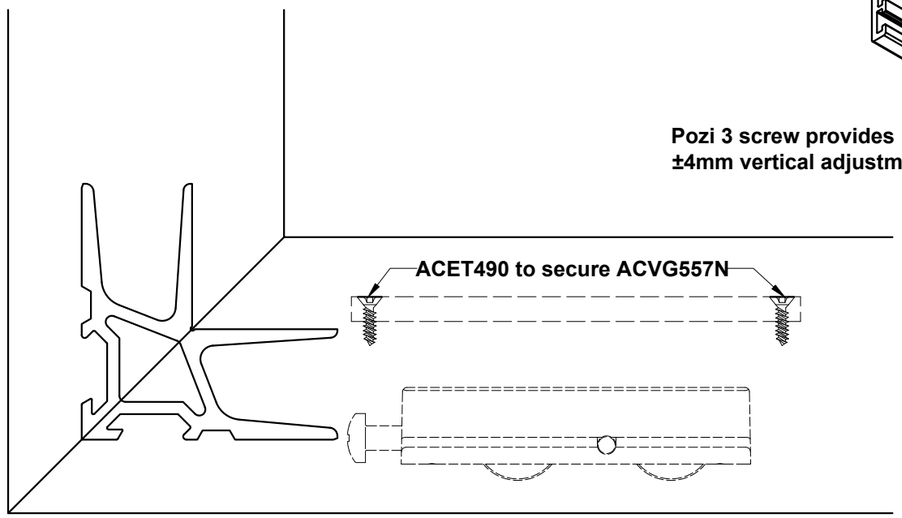

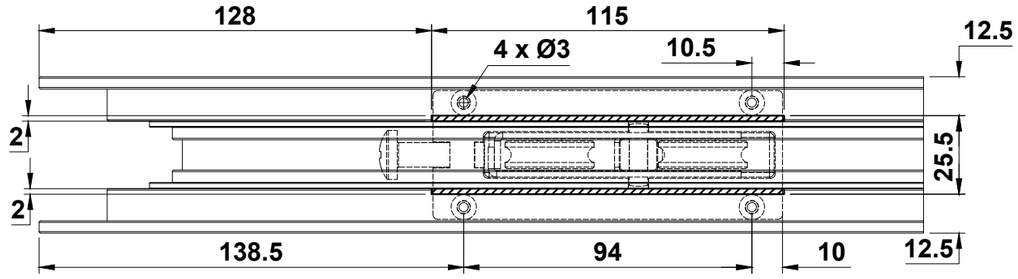

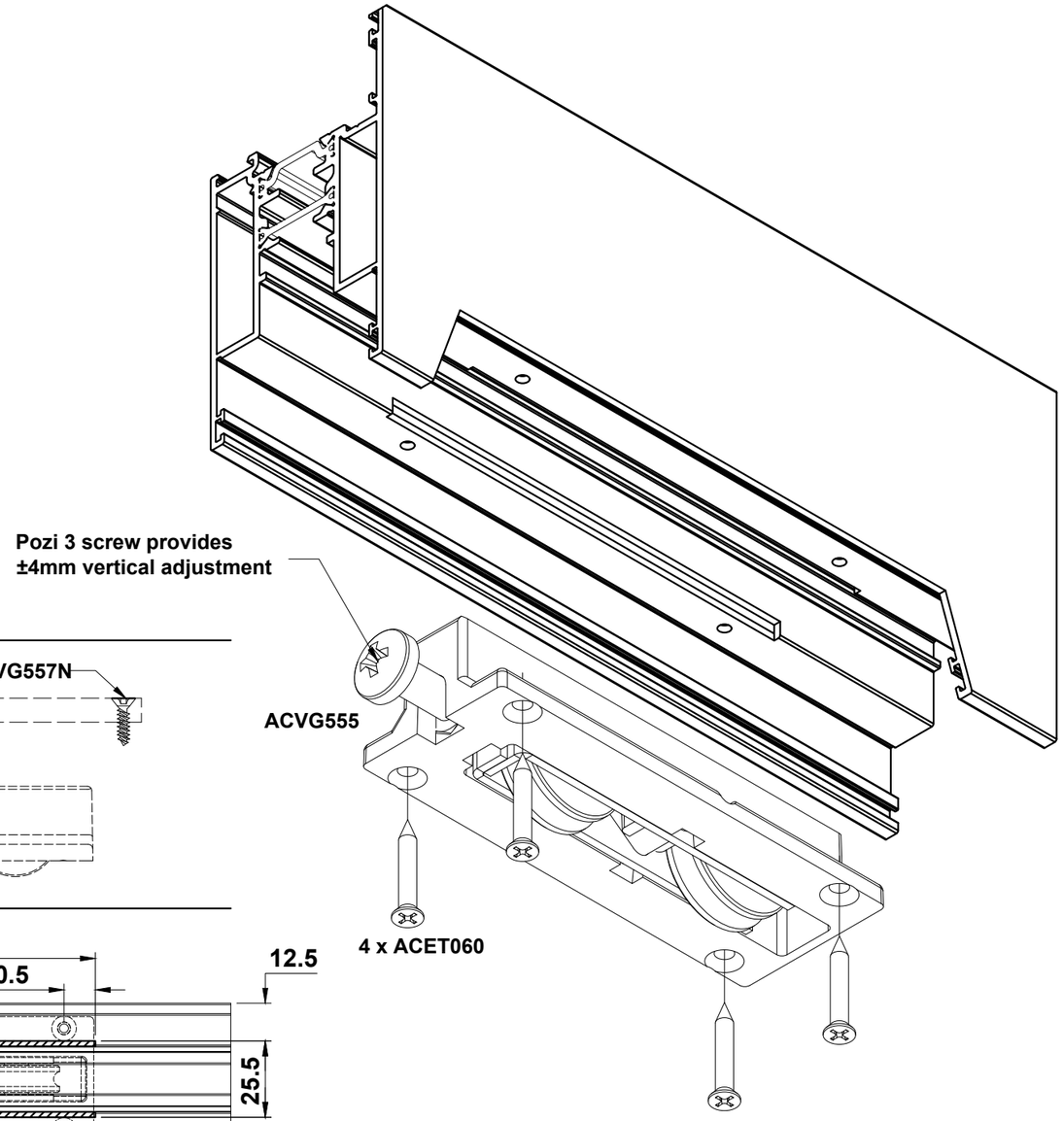

Do Not Scale From This Drawing

ACVG5055 Roller Preparation & Fixing - Slide

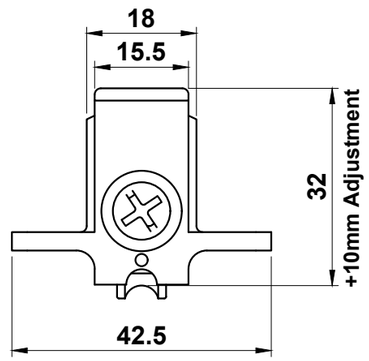

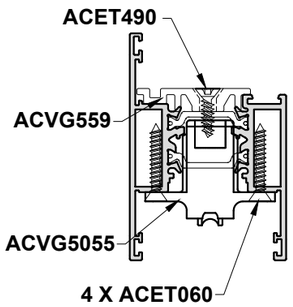

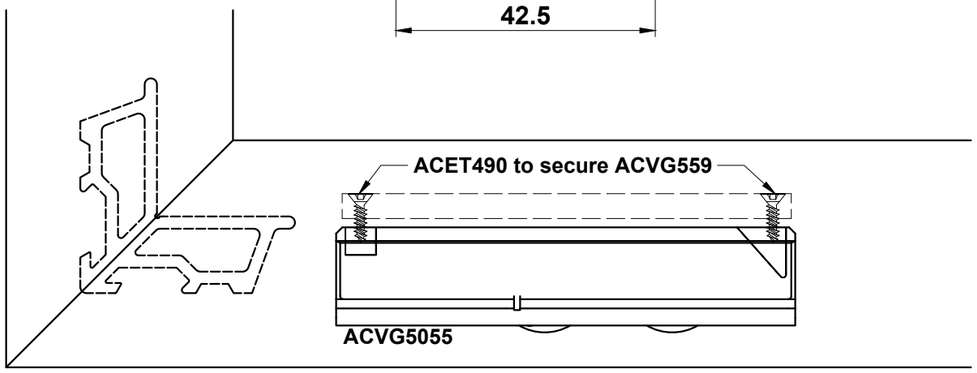

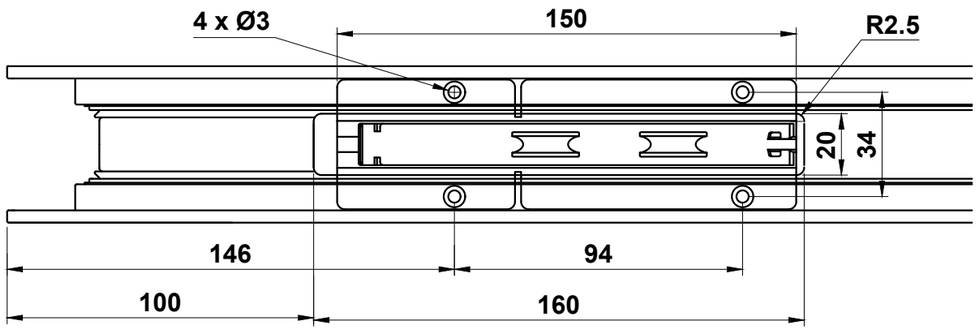

ACVG5055 Adjustable Roller

Max Sash Weight: 200kg

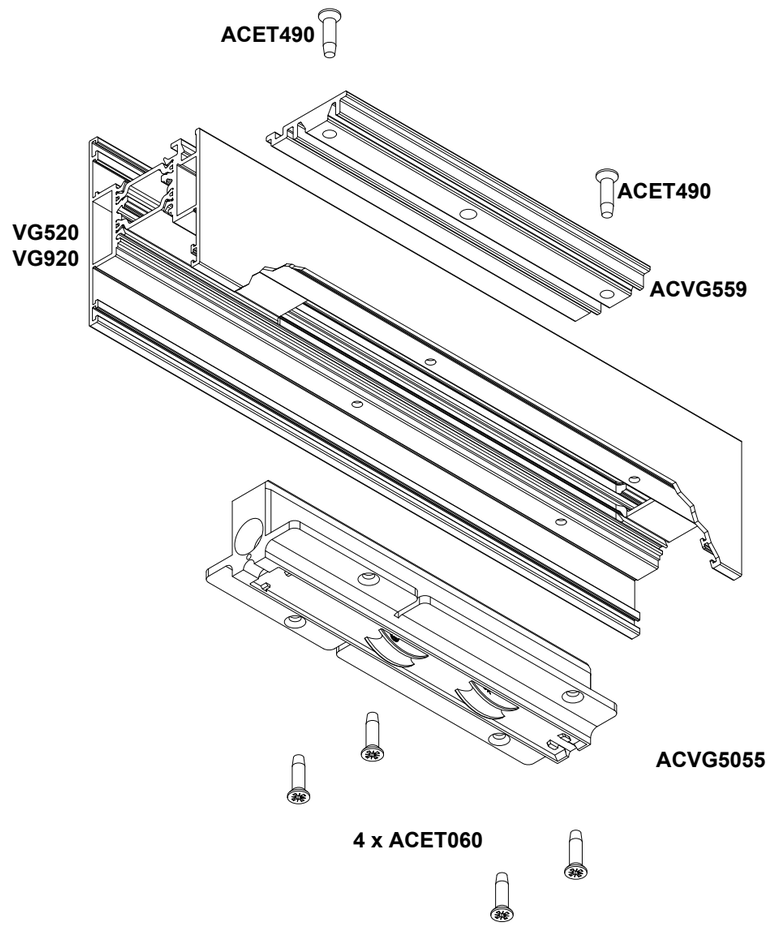

Do Not Scale From This Drawing

Multi-Point Lock Preparation & Installation

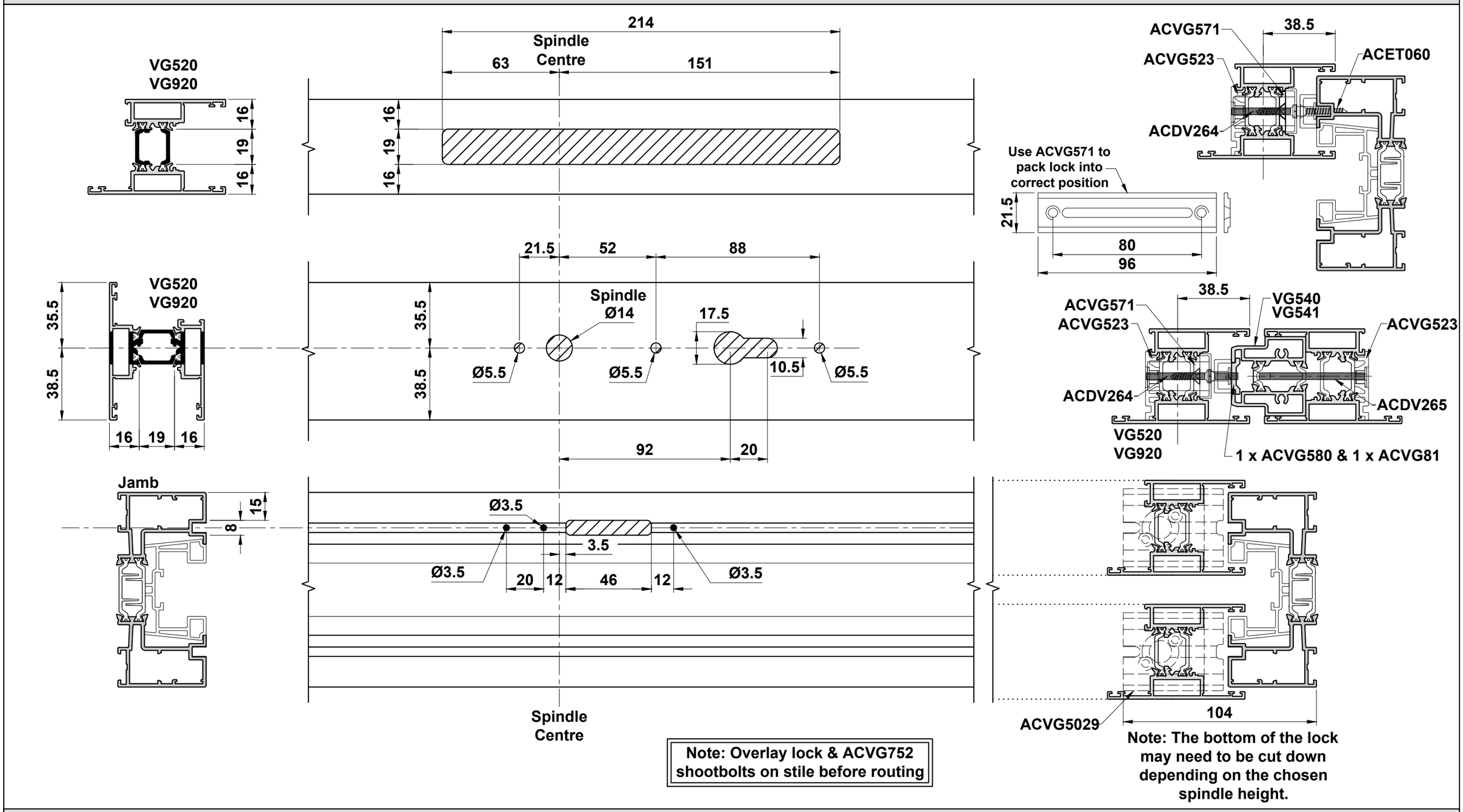

Do Not Scale From This Drawing

ACSZ024, 025 & 026 with ACSZ882 & ACSZ883 Preparation & Installation

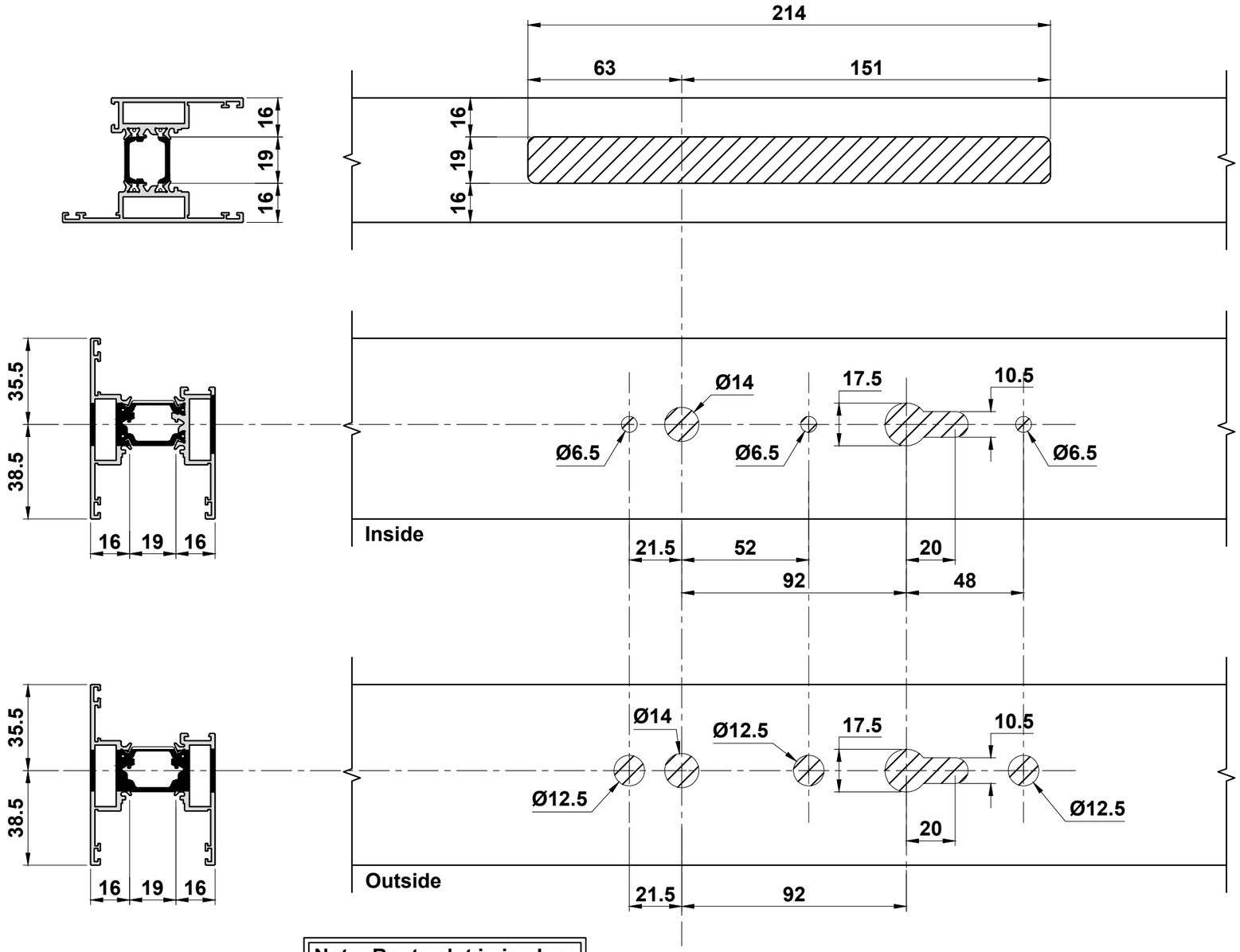

Note: Route slot in jamb as shown on Page E.12

Note: Overlay lock & ACVG752 shootbolts on stile before routing

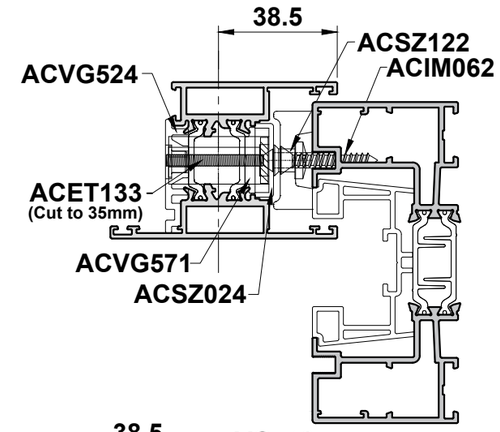

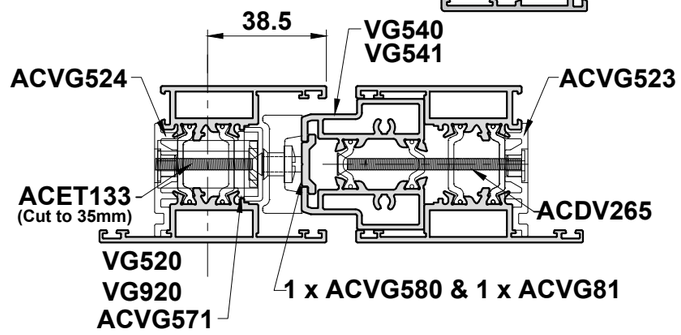

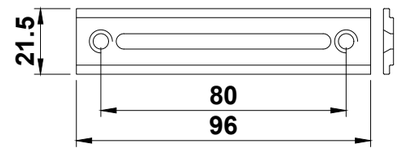

Use ACVG571 to pack lock into correct position

Note:
ACVG529 cannot be used with PAS24 locks & keeps.

Do Not Scale From This Drawing

ACVG752 Shootbolt

Note:
ACVG529 cannot be used with ACVG752 shootbolts.

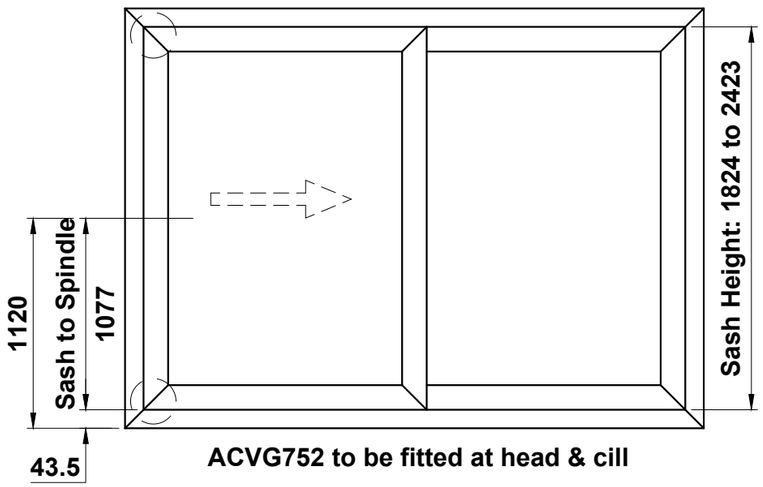

ACVG752 to be fitted at head & cill

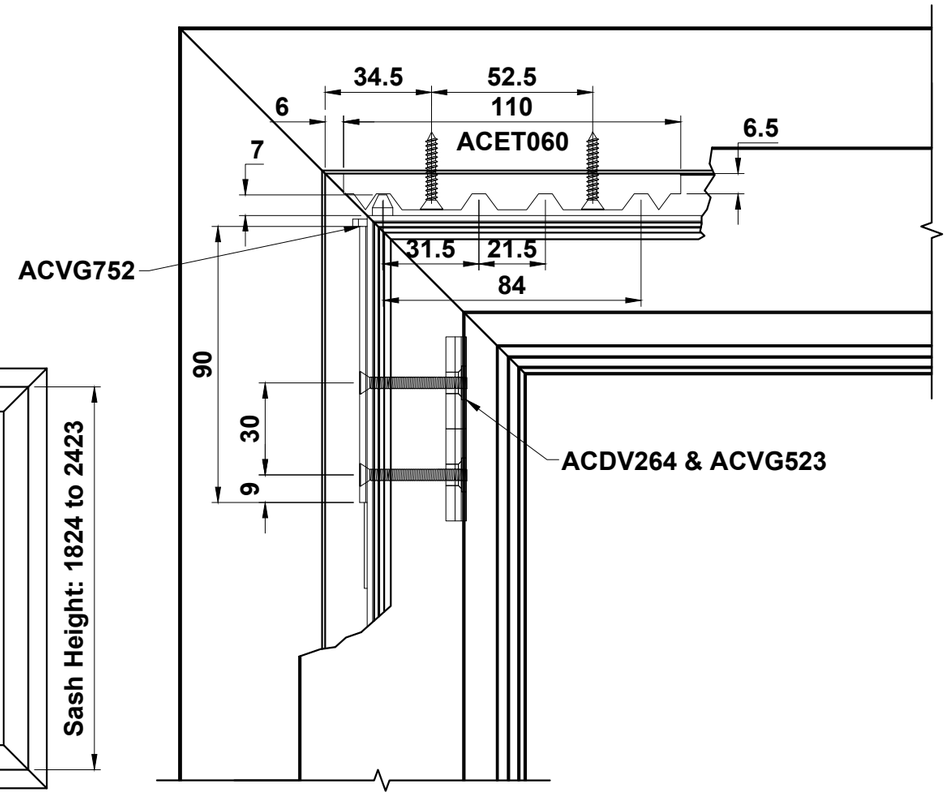

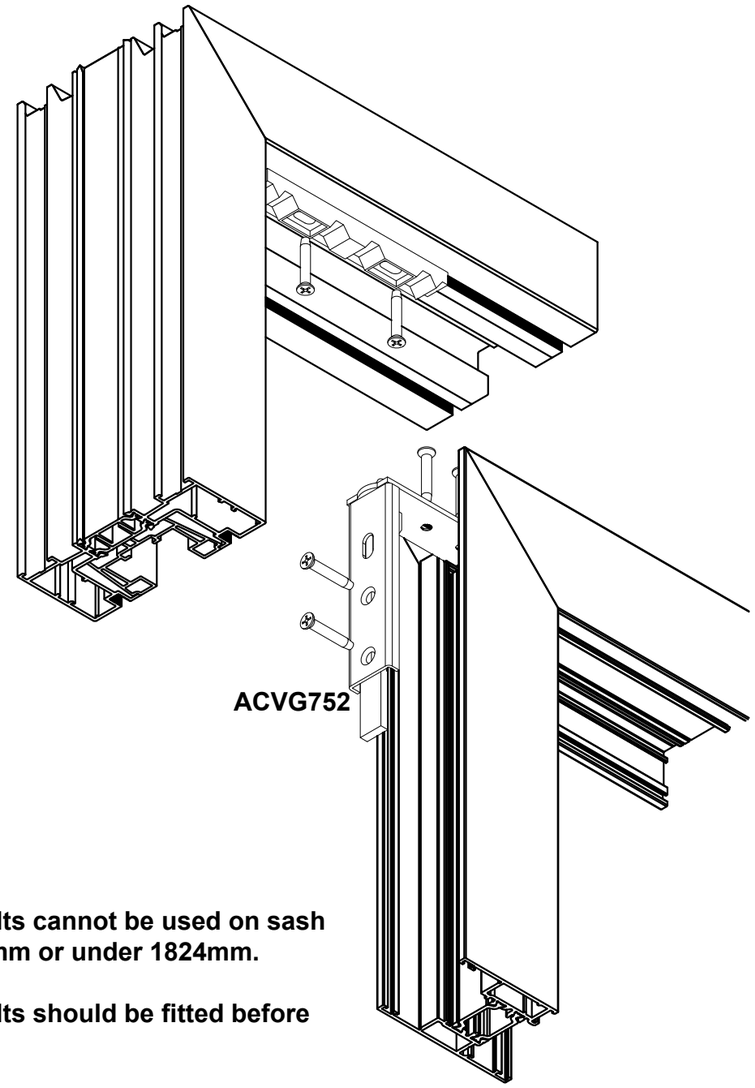

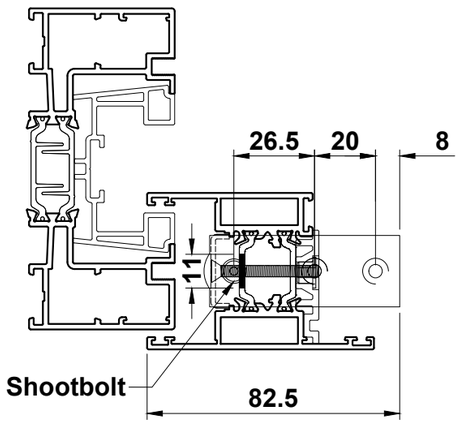

Sash Routing Detail

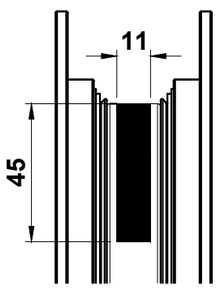

Route 45mm x 11mm of the polyamide in sash at both head and cill to allow for shootbolt to operate.

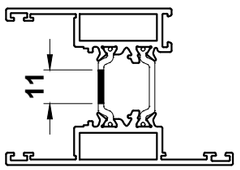

Important Note:
ACVG752 shootbolts cannot be used on sash heights over 2423mm or under 1824mm.

ACVG752 shootbolts should be fitted before fitting the lock.

Do Not Scale From This Drawing

ACSZ040, ACSZ041 & ACSZ042 Details

Diagram below shows VG520 & VG920 sash.

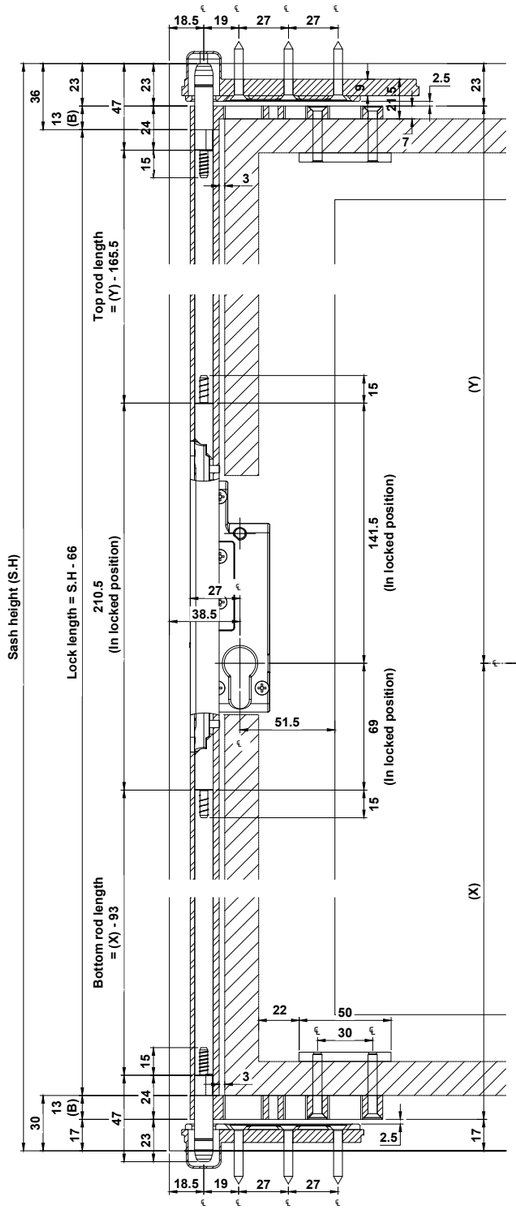

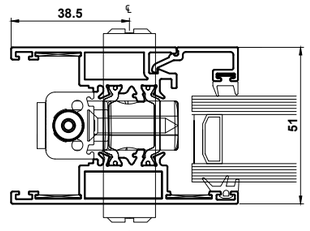

Prep 2
VG920

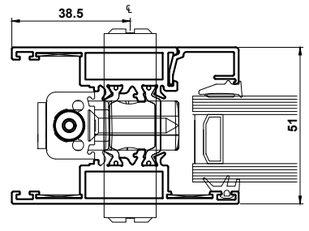

Prep 2
VG520

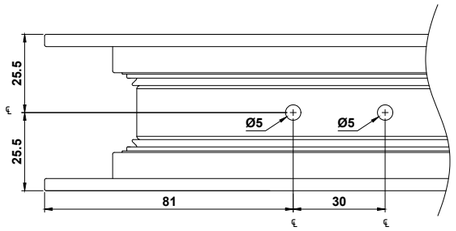

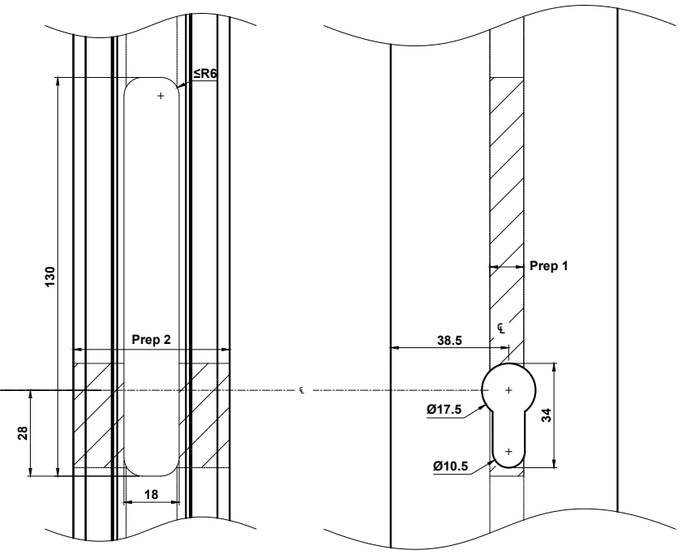

Prep 1.

Prep 2.

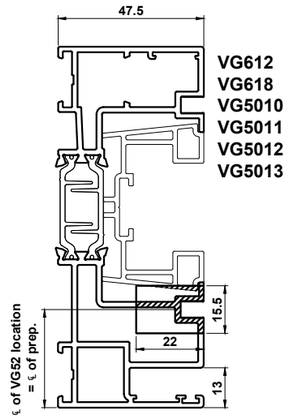

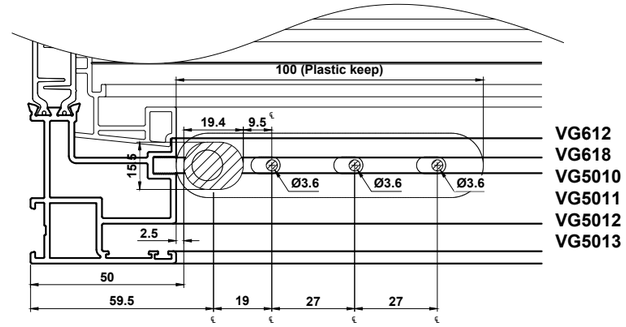

PAS24
If using non-tested pull handles. ACSZ400 (External) and ACSZ839 (Internal) must be used alongside ACCY4040NKS1 high security cylinder.

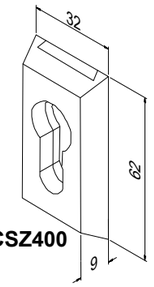

ACSZ400

Top and bottom prep for lock keeps.
Note: Prep for keeps prior to frame assembly.

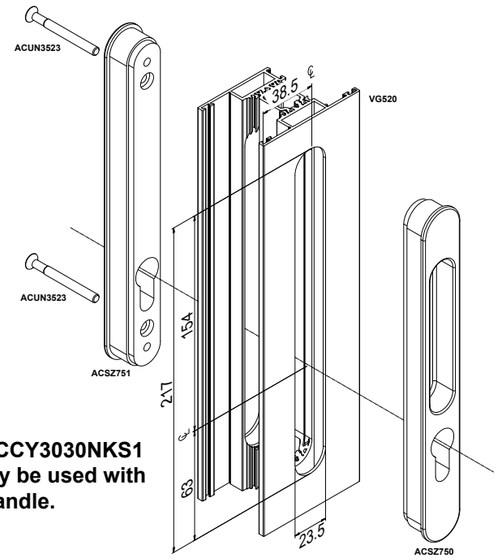

Sash height	Length lock (L)	Lock Kit	Fixing Kit
≤ 2366mm	≤ 2300mm	ACSZ040	ACSZ046/050
≤ 2766mm	≤ 2700mm	ACSZ041	ACSZ046/050
≤ 3166mm*	≤ 3100mm	ACSZ042	ACSZ046/050

***Important Note:**
The lock has been successfully tested to PAS24 with an overall frame height of 3 metres.

PAS24
Standard ACCY3030NKS1 cylinder may be used with ACSZ750 handle.

Do Not Scale From This Drawing

ACSZ040, ACSZ041 & ACSZ042 Details

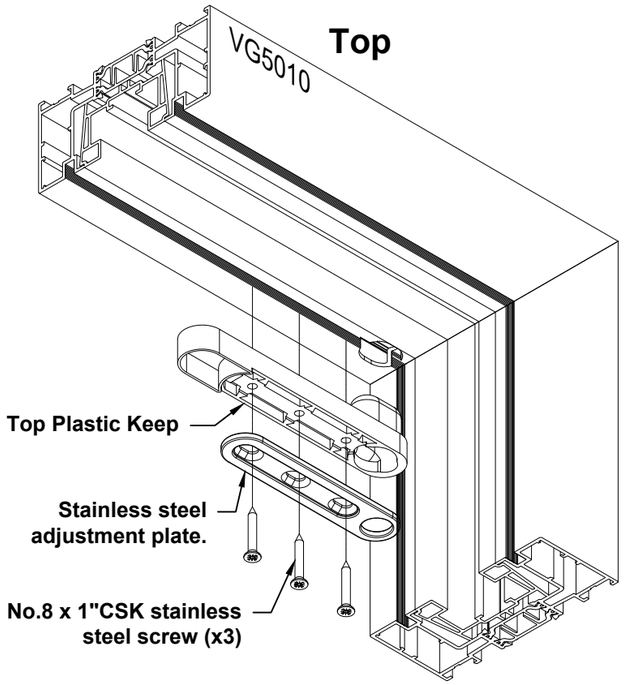

Lock Kit	L	A	B
ACSZ040	2300	300	240
ACSZ041	2700	400	340
ACSZ042	3100	500	440

1. The lock is cut to size together with the rods without removing an parts.
2. The cylinder height can be reduced by cutting up to 741mm from the bottom of the lock.

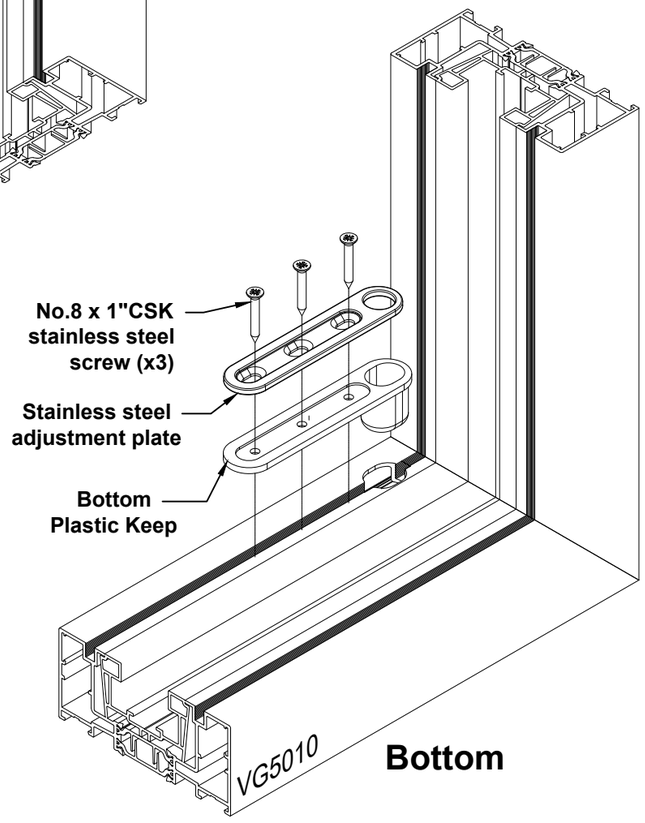

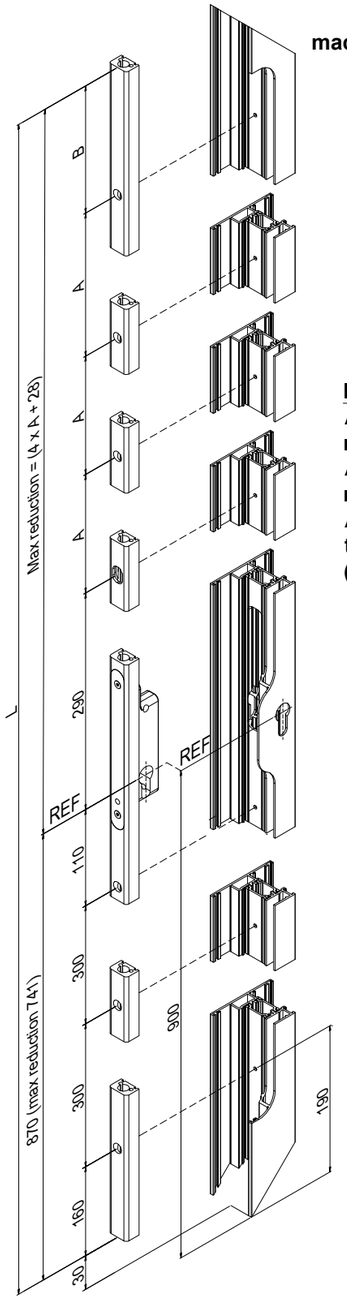

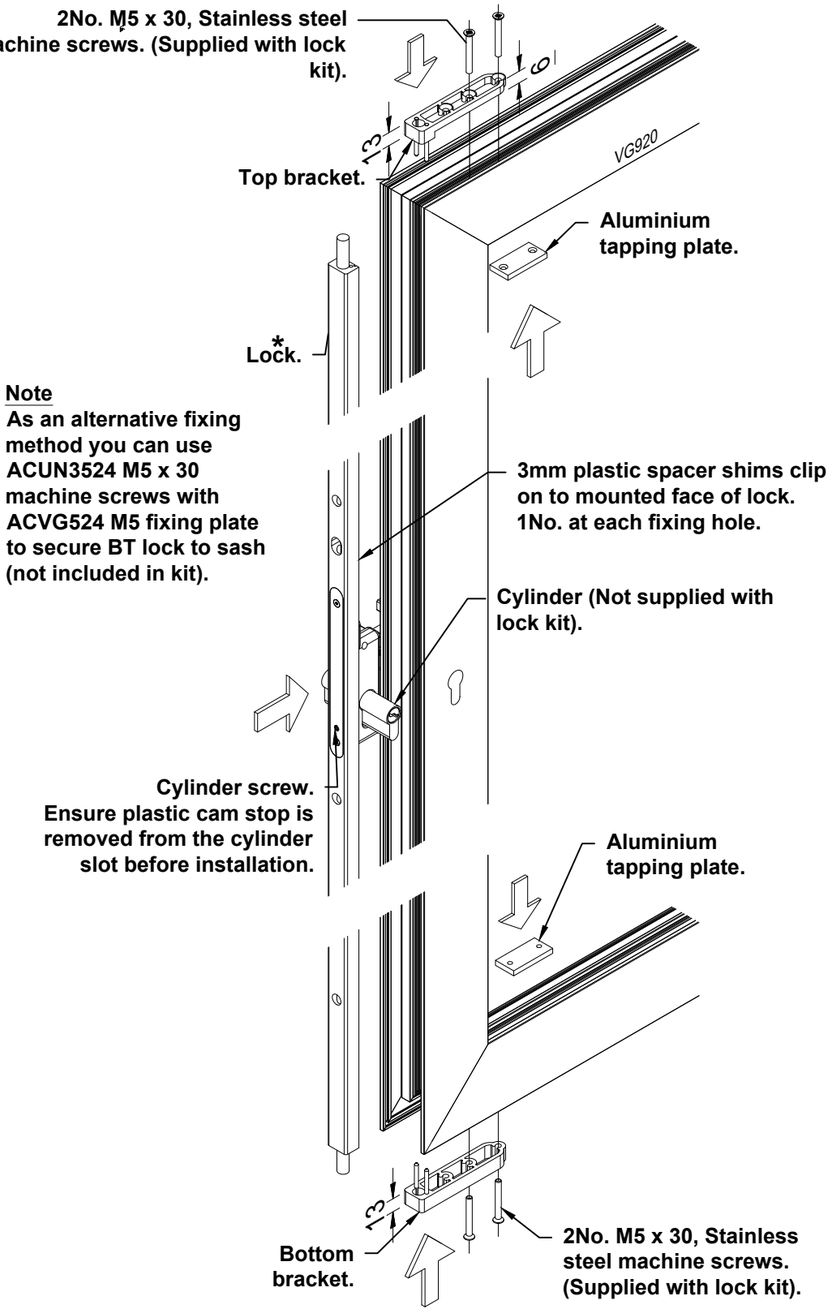

Note
As an alternative fixing method you can use ACUN3524 M5 x 30 machine screws with ACVG524 M5 fixing plate to secure BT lock to sash (not included in kit).

ACSZ046 - Fixing Kit Contents

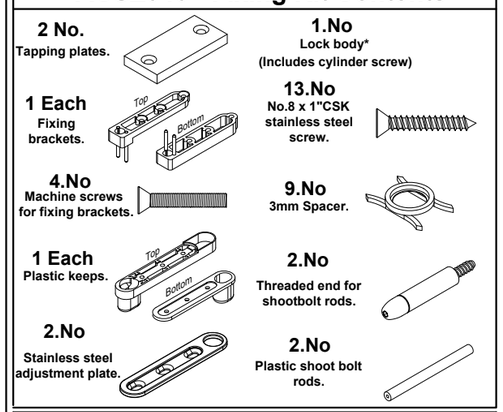

ACSZ050 - Fixing Kit Contents

Same as ACSZ046 except the keeps and the adjustment plates that are provided with an extra opening for a night vent position.

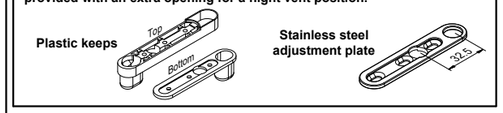

Do Not Scale From This Drawing

BT Lock Meeting Stile Detail

Important Note:
Fix ACSZ040, ACSZ041 or ACSZ042 to the sash using detail on previous page before fixing the meeting stile in place.

Outer Frame Prep Top & Bottom

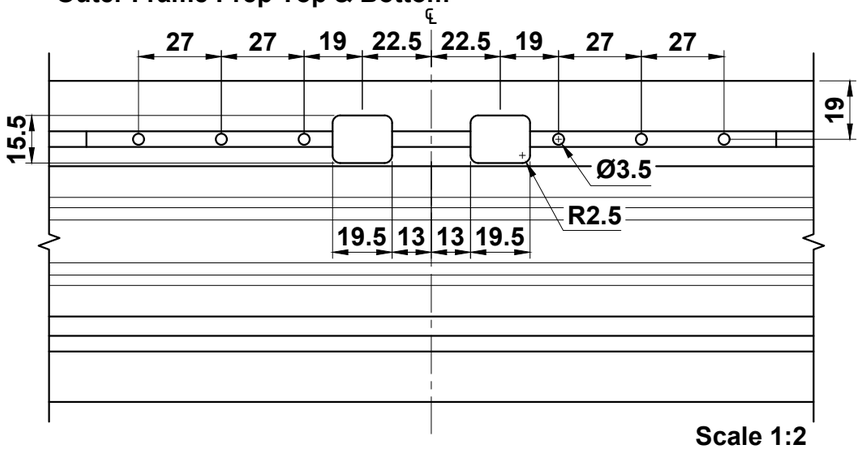

Scale 1:2

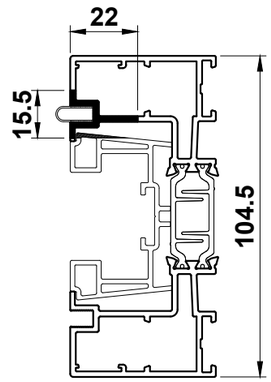

Scale 1:2

See page E32 for VG549 End Prep Details

Scale 1:3.33

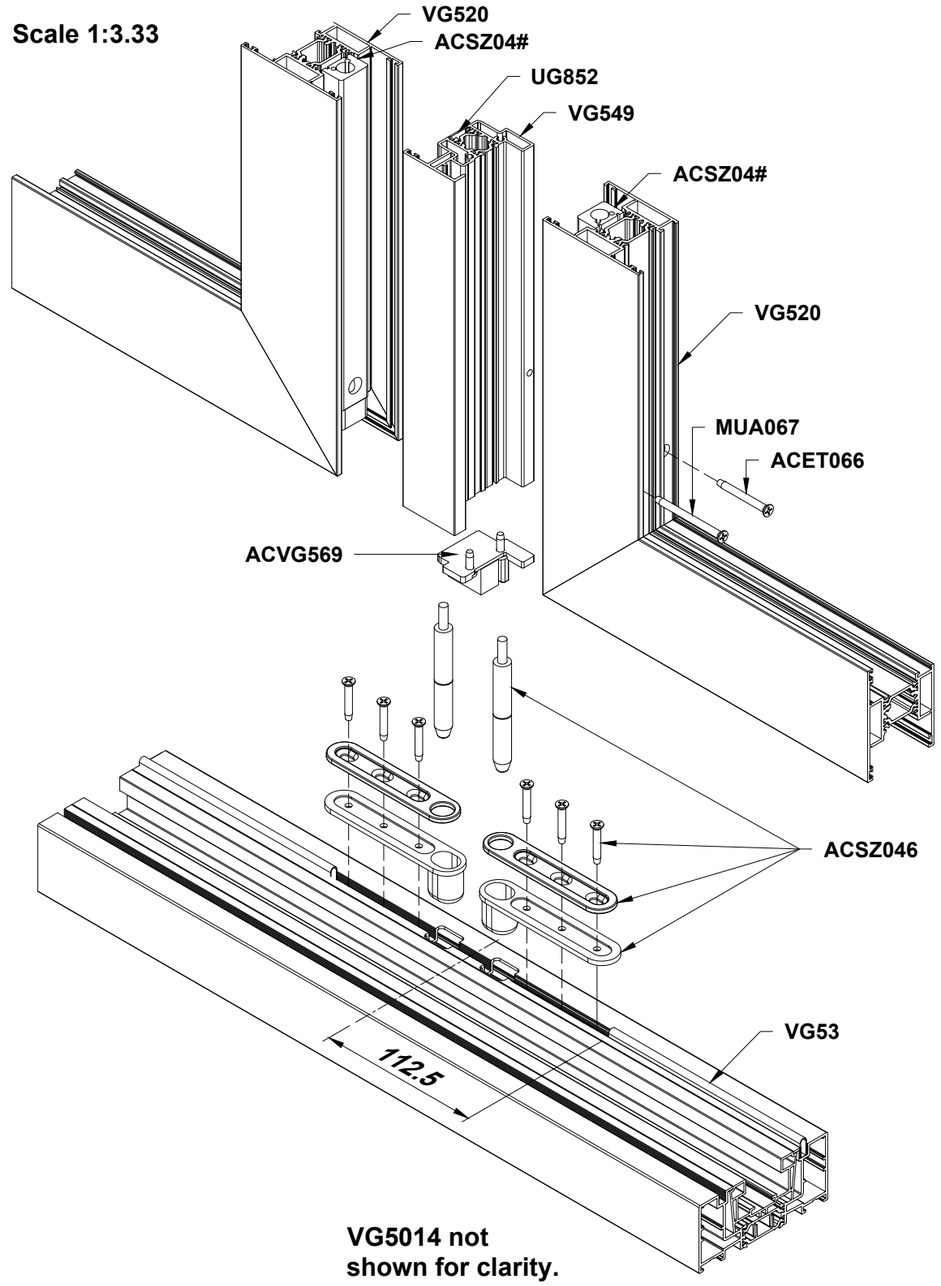

VG5014 not shown for clarity.

Do Not Scale From This Drawing

ACVG649 Shootbolt Lock Profile Preps

ACVG648 Keep Prep

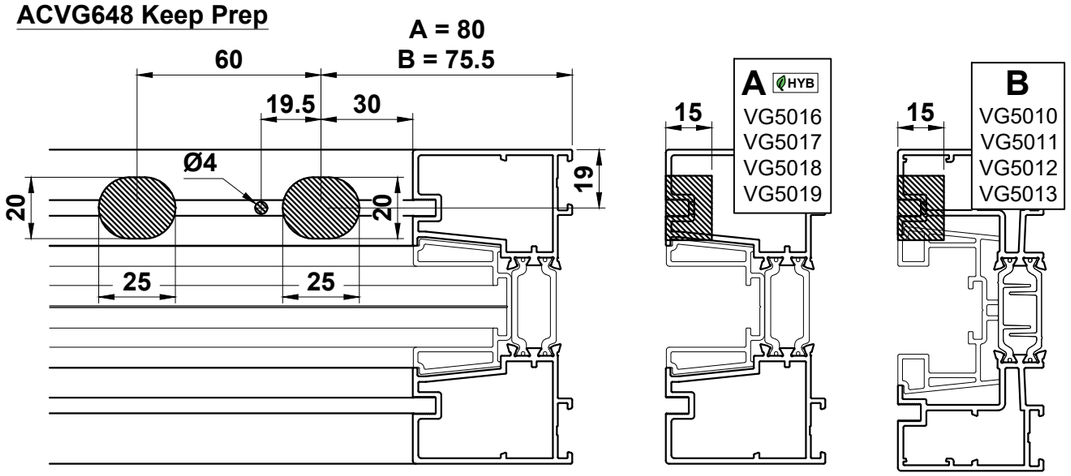

ACVG647 Shootbolt Guide Prep

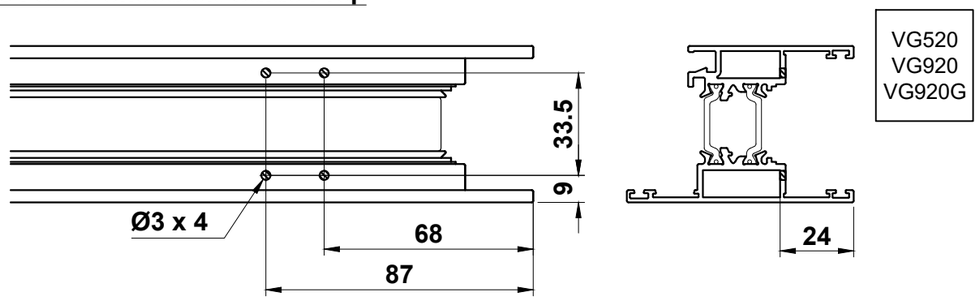

ACDV228/ACDV328 Shootbolt Prep

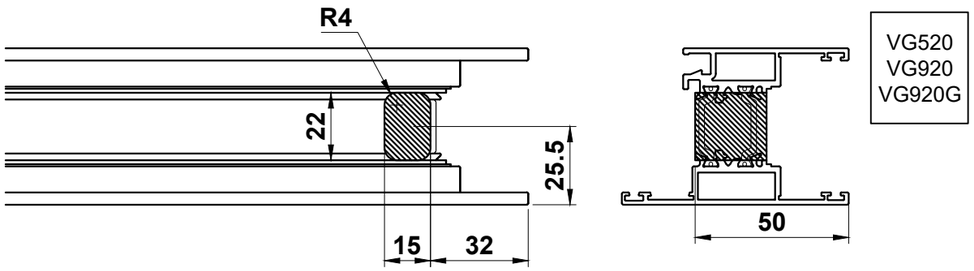

ACVG319/ACVG320 Handle Prep

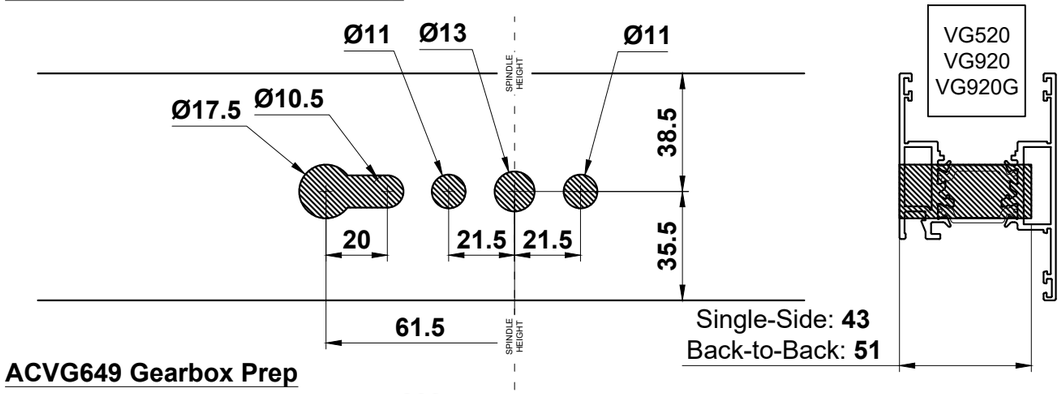

ACVG649 Gearbox Prep

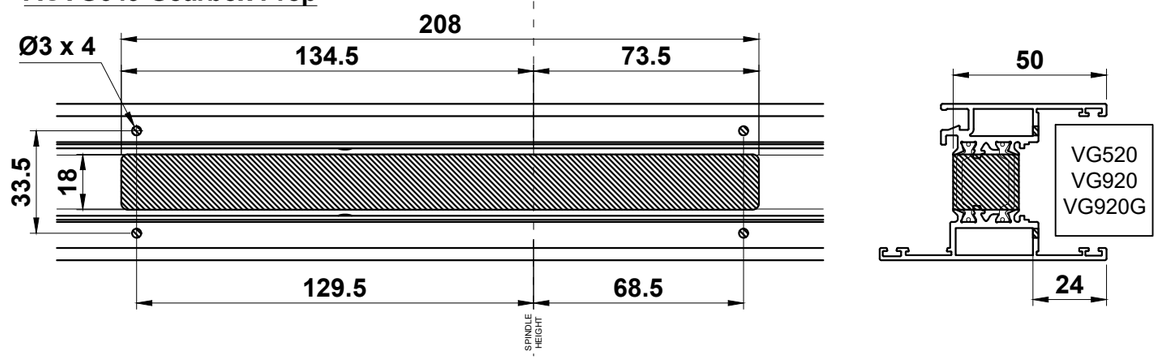

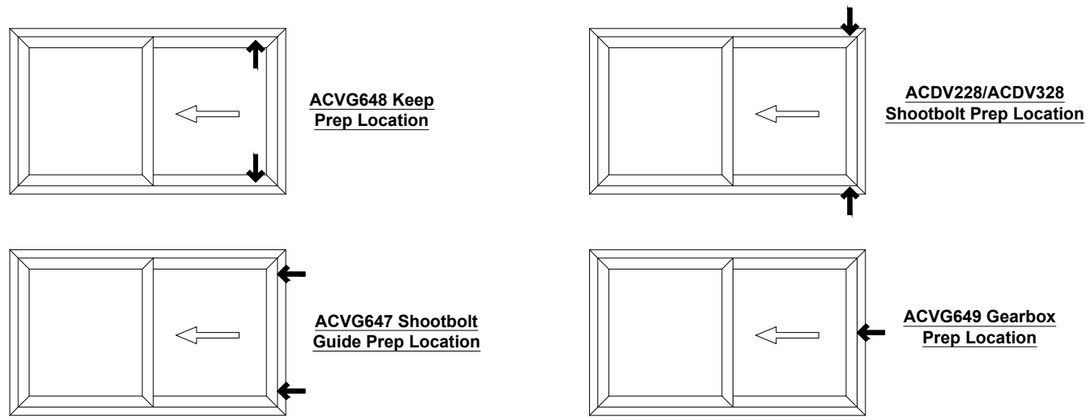

Do Not Scale From This Drawing

ACVG649 Shootbolt Lock Assembly

ACVG648 Keep Installation

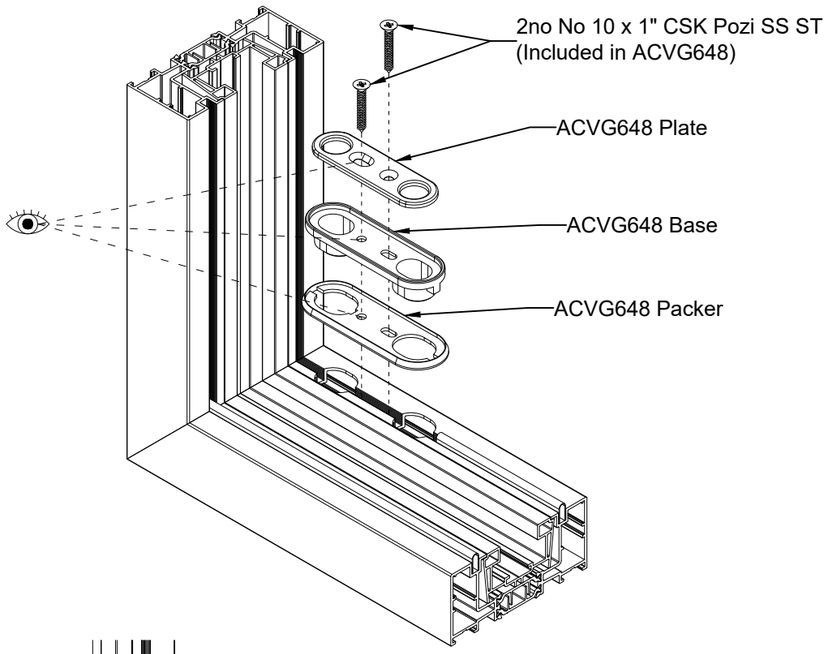

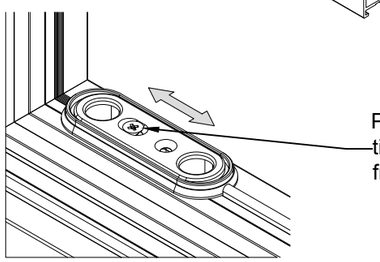

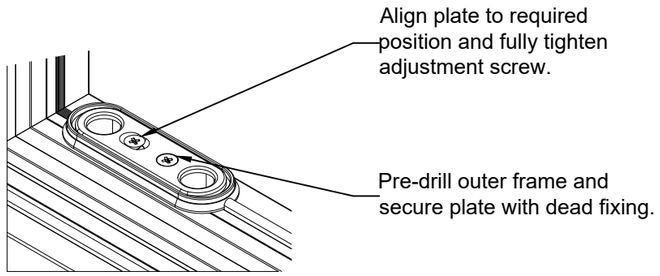

ACVG647 Shootbolt Guide Installation

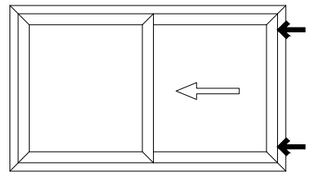

IMPORTANT NOTE:
ACVG647 at head should be fitted once sash is installed in outerframe.

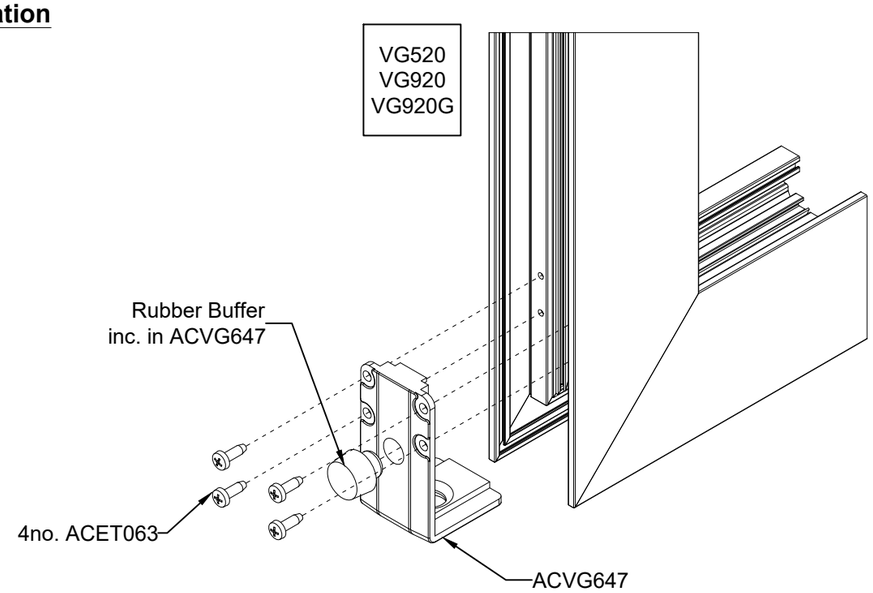

ACVG646 & ACVG649 Gearbox and Cover Installation

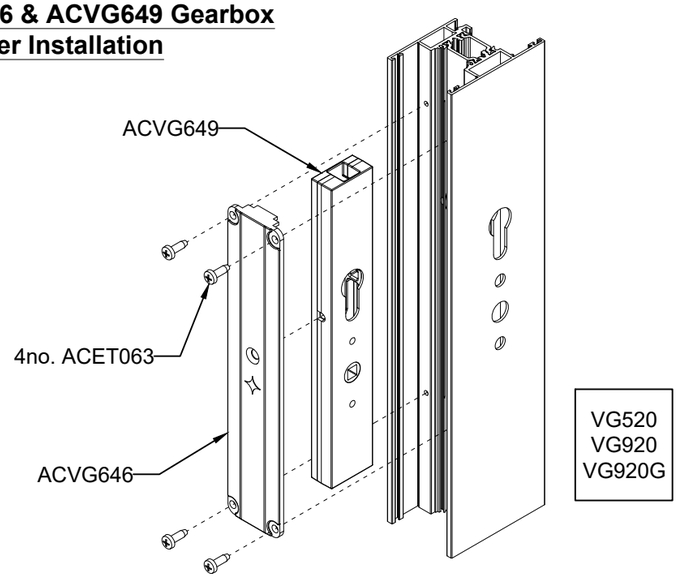

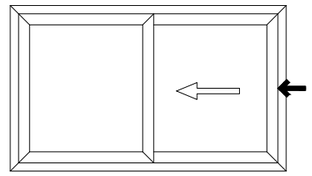

IMPORTANT NOTE:
ACVG649 gearbox is fixed in place using cylinder fixing screw and handle fixings.

Do Not Scale From This Drawing

ACVG649 Shootbolt Lock Rod Deductions & Handle Selection

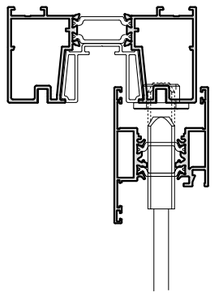

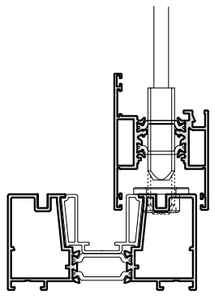

	OUTERFRAME	
	PROFILE	a
PLUS	VG5010	80
PLUS	VG5011	80
PLUS	VG5012	80
PLUS	VG5013	80
HYBRID HYB	VG5016	84.5
HYBRID HYB	VG5017	84.5
HYBRID HYB	VG5018	84.5
HYBRID HYB	VG5019	84.5

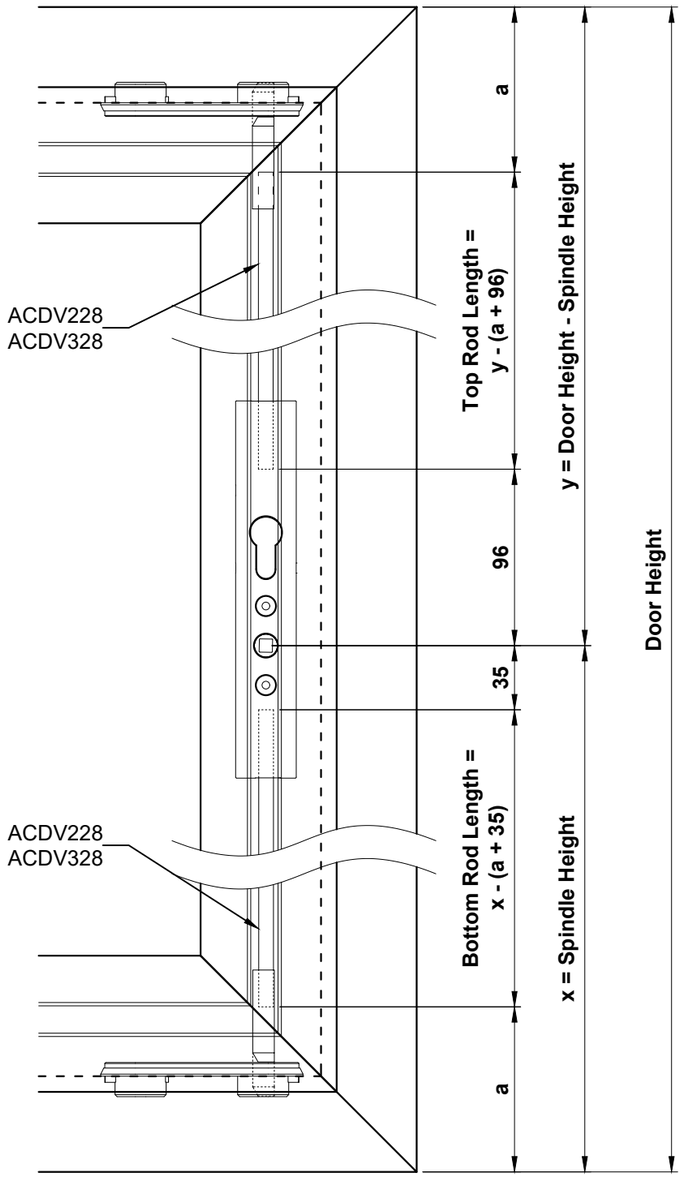

	Internal Handle	External Handle	Spindle	Screw	Cylinder
Single Sided	ACVG319L/R	N/A	1no ACUN3586	2no ACUN3587	ACMX01603
Back-to-Back	ACVG319L/R	ACVG320L/R	1no ACUN3588	2no ACUN3589	ACCY4040NK
Single Sided	ACVG323L/R	N/A	Incl. in ACVG323	Incl. in ACVG323	ACMX01604
Back-to-Back	ACVG323L/R	ACVG323L/R	ACVG313	ACVG313	ACCY4545NK

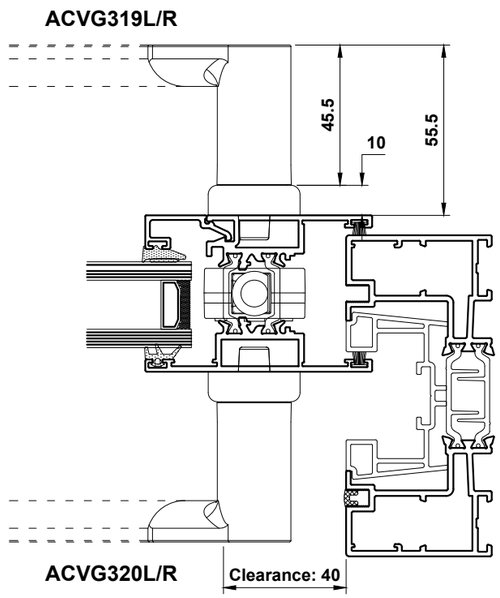

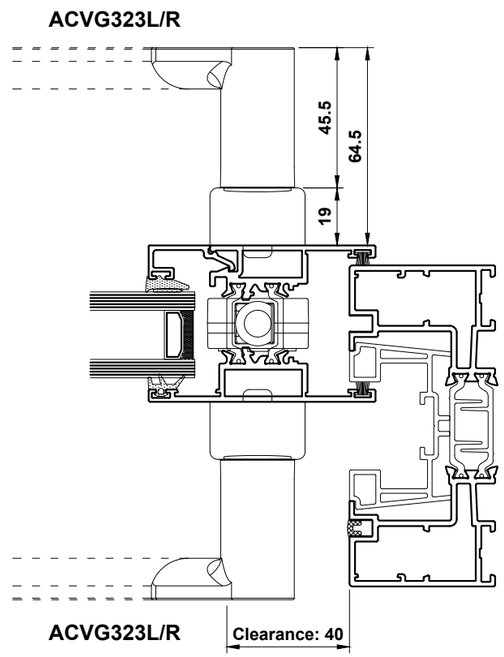

Do Not Scale From This Drawing

ACVG649 Shootbolt Lock Handle Assembly

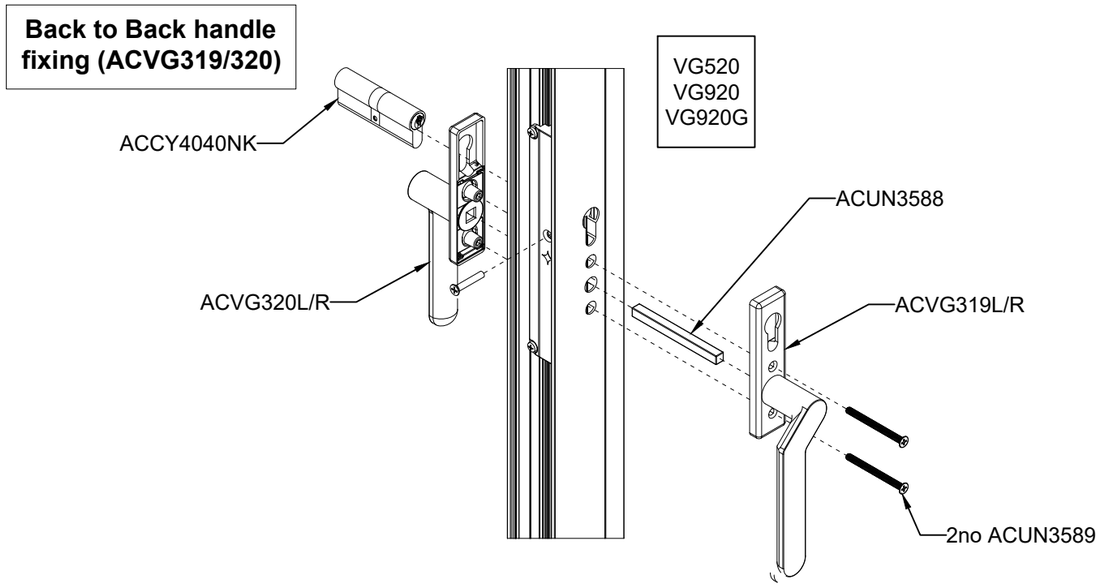

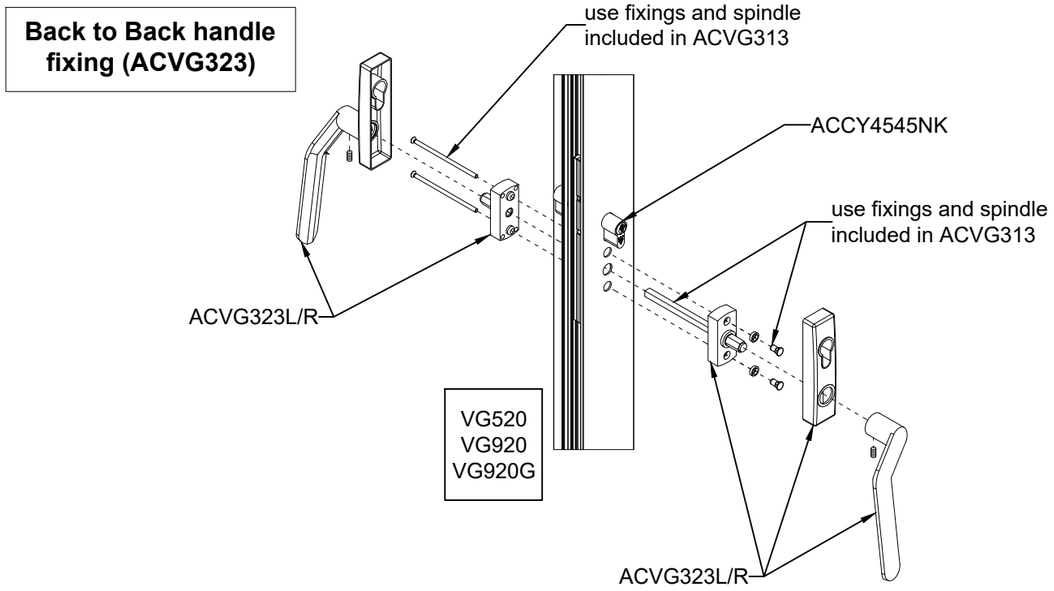

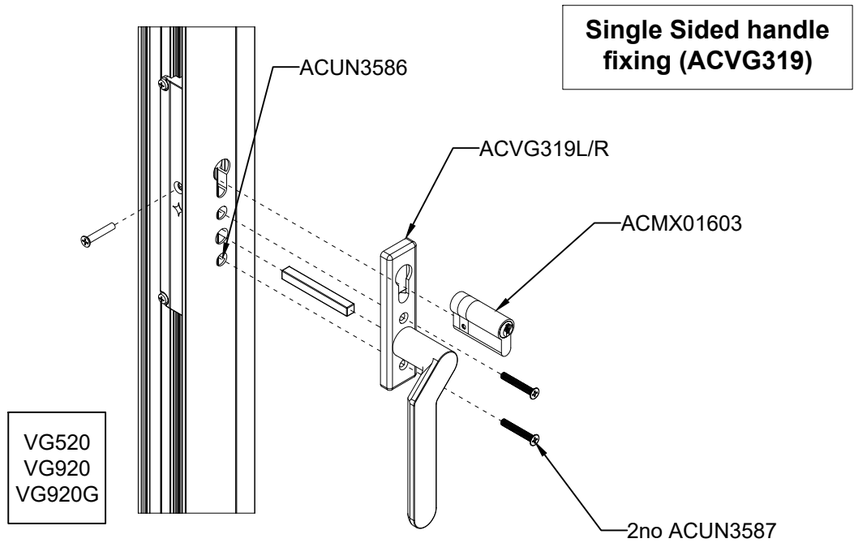

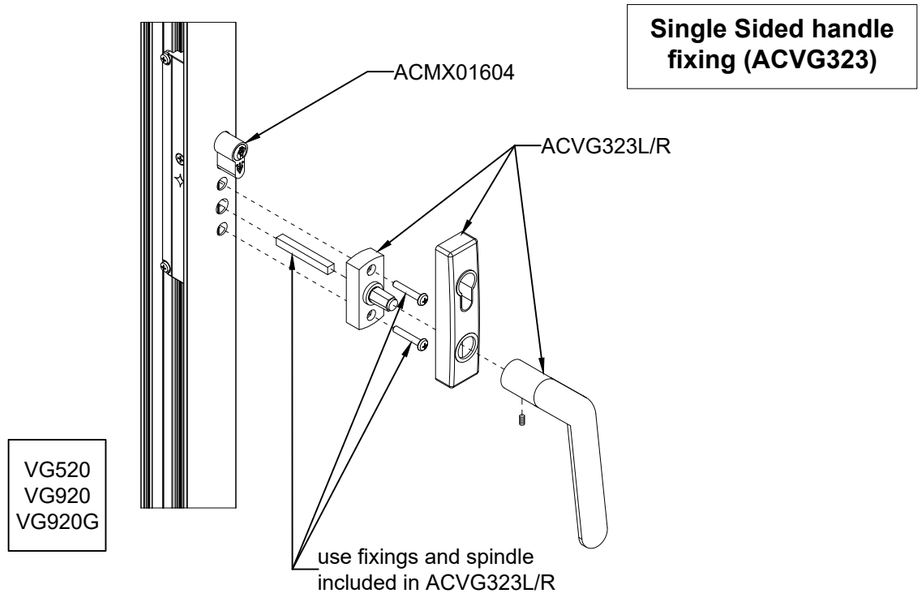

Do Not Scale From This Drawing

ACVG649 Shootbolt Lock PAS24 Guide PAS 24

PAS24 Shoot Guide Prep

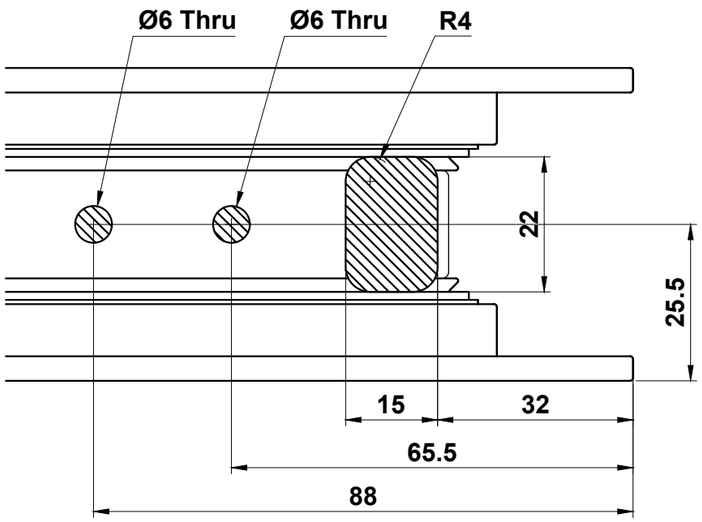

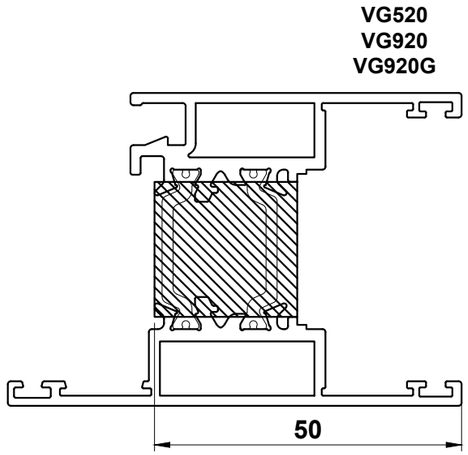

Important Note:
To meet PAS24 requirements, the steel guide, steel packer, and fixing plate from kit ACVG656 must be installed at both the top and bottom of the sliding sash. These must be used together with the shootbolt guides in kit ACVG657.

Stainless steel shootbolts (ACVG5328) must also be fitted, and cylinders need to be upgraded to 3-star rated versions.

We also recommend using the keep packers supplied in kit ACVG648 to ensure proper shootbolt engagement and to improve anti-lift performance.

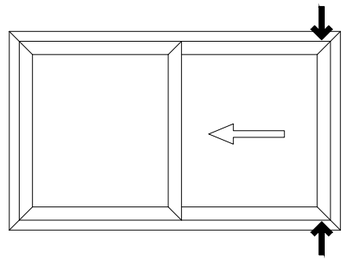

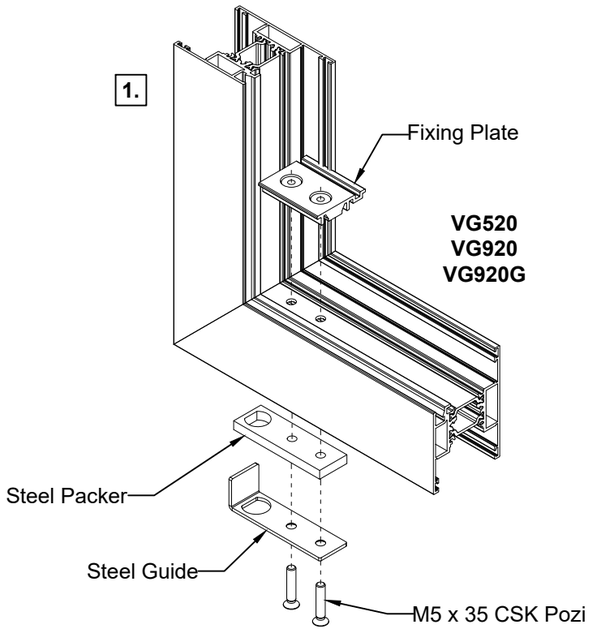

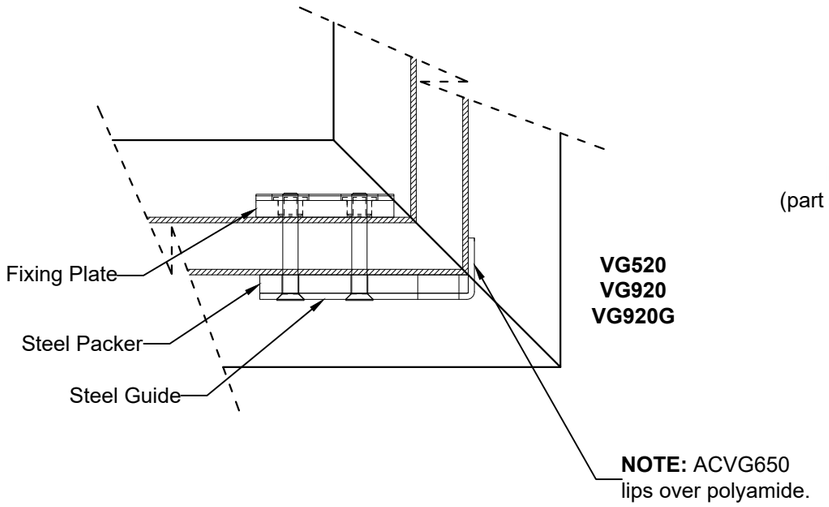

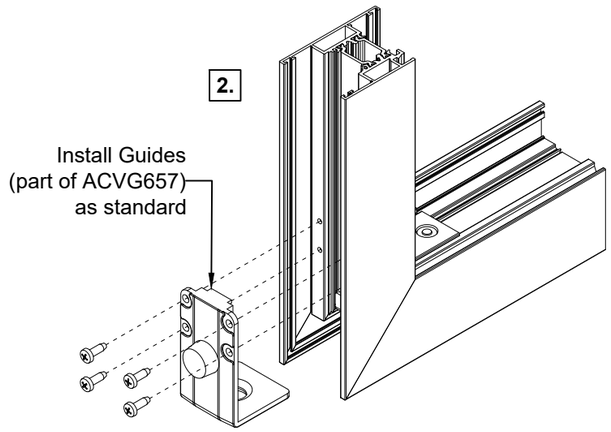

Do Not Scale From This Drawing

ACVG658 PAS24 Keep & ACVG1598N Interlock Security Device Installation PAS 24

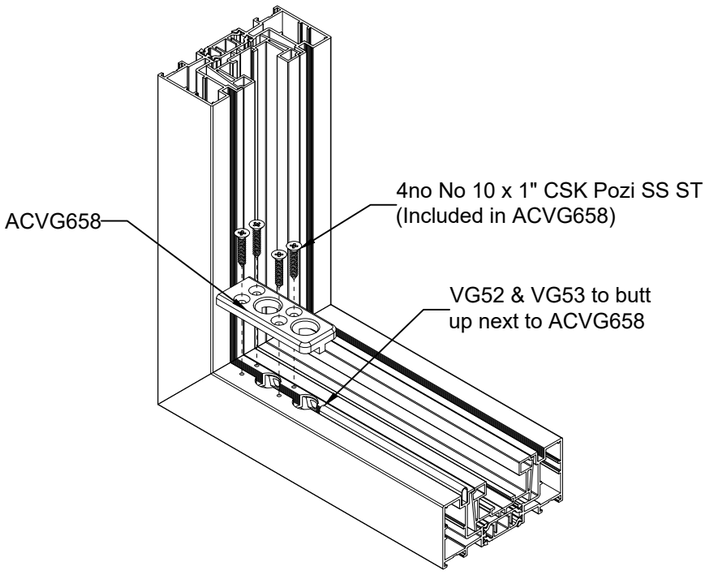

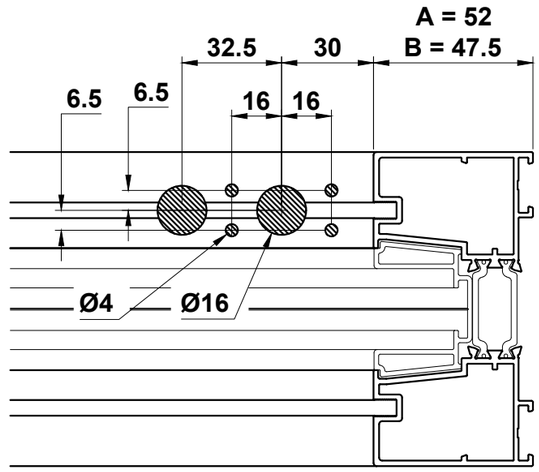

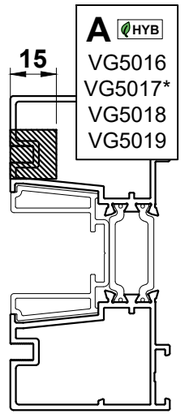

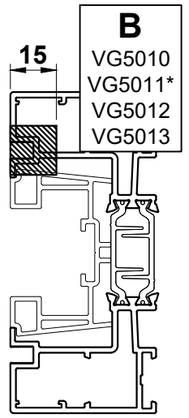

Important Note:
To meet PAS24 requirements when using ACVG649 Shootbolt, ACVG658 Shootbolt Keeps and ACVG1598N Interlock Security Devices must be used as outlined on this page.

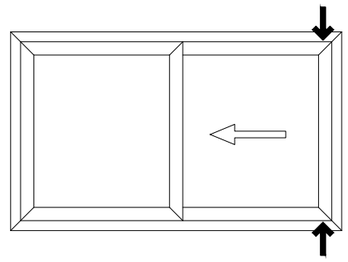

*only 2 track outerframes with upstand tested to PAS24:2022, other outerframes to be tested.

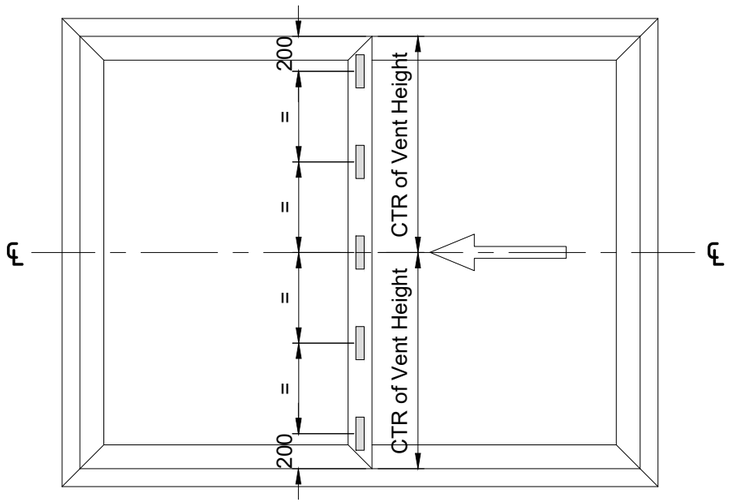

= ACVG1598N installation location

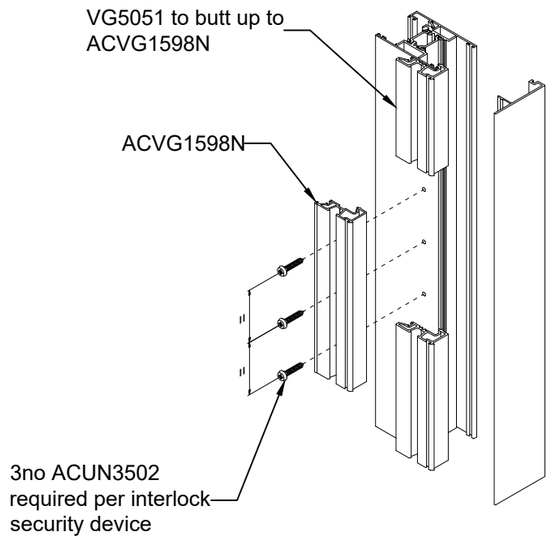

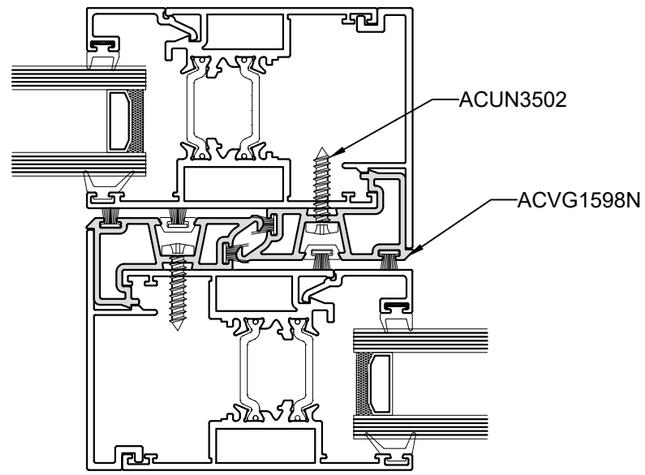

Do Not Scale From This Drawing

Sash to Outer Frame Locking

VG5008 VG5010 VG5011 - VG520/VG920

	SASH HEIGHT	LOCKS	KEEPS: INDIVIDUAL KEEPS: MIDDLE	KEEPS: INDIVIDUAL KEEPS: TOP / BOTTOM	KEEPS: FULL HEIGHT KEEP	KEEPS: FULL HEIGHT KEEP + 600mm
Pentalock	2024 - 2223	ACSZ024			ACSZ122	ACSZ124
Pentalock	1824 - 2023	ACSZ025			ACSZ126	ACSZ128
Pentalock	2224 - 2423	ACSZ026			ACSZ130	ACSZ132
Pentalock	2024 - 2223	ACSZ007	ACSZ100	ACSZ101	ACSZ103	ACSZ105
Pentalock	1824 - 2023	ACSZ008	ACSZ100	ACSZ101	ACSZ107	ACSZ109
Pentalock	2224 - 2500*	ACSZ009	ACSZ100	ACSZ101	ACSZ111	ACSZ113
		ACSZ010				
Shootbolt lock	≤ 2366mm	ACSZ040		ACSZ046		
Shootbolt lock	≤ 2766mm	ACSZ041		ACSZ046		
Shootbolt lock	≤ 3166mm	ACSZ042		ACSZ050		
		EXT.	INT.			3 x
Lever Handles		ACSZ800	ACSZ801	ACMX209		ACSG070
Lever Handles		ASCZ802	ACSZ803 / ACSZ830	ACMX209	ACCY4040NKS1	ACSG070
'D' Handles		ACSZ898 (L/R)	ACSZ895 (L/R)	ACMX009	ACCY4040NKS1	ACSG070
'D' Handles		ACSZ899 (L/R)	ACSZ896 (L/R)	ACMX009	ACMX01603	ACSG070
No External Handle		ACSZ400 + 2 x ACVS061	ACSZ803 / ACSZ830 / ACSZ895 (L/R)	ACMX009	ACCY4040NKS1	ACVS061 & ACMX867
Pull Handle without External Cylinder		ACSZ823	ACSZ801 / ACSZ803 / ACSZ830	ACMX009	ACMX01603	ACSG070
Flush Pull Handle without External Cylinder		ACSZ841	ACSZ801 / ACSZ803 / ACSZ830	ACMX009	ACMX01603	ACET220

* ACVG752 shootbolts cannot be used on sash heights over 2423mm.

EXT.	INT.			3 x	
ACSZ882	ACSZ883	ACMX209	ACCY4040NKS1	M6 x 65	PAS24:2016

PAS24:2016

For full details to achieve PAS24:2016, please see page E68 & Test Report 8247857

Flush Pull Handle with Cylinder				2 x
	ACSZ750	ACSZ751	ACCY3030NKS1	ACUN3523

Shootbolt Lock Only.

With Cylinder
Without Cylinder
T Handle With Cylinder

LIFT & SLIDE

LIFT & SLIDE DRIVE GEAR	HIGH SECURITY LIFT & SLIDE DRIVE GEAR	HIGH SECURITY LIFT & SLIDE DRIVE GEAR
MAX 200 KG	MAX 270 KG	MAX 400 KG*
ACVG277	ACVG5276	ACVG5276
ACVG278	ACVG5277	ACVG5277
ACVG279	ACVG5278	ACVG5278

* Requires additional roller ACVG5287

LIFT & SLIDE				
EXT.	INT.			2 x
ACSZ860	ACSZ861	ACMX1138*		ACET235
ACSZ860	ACSZ863	ACMX1138*		ACET235
ACSZ862	ACSZ861	ACMX1138*	ACMX01603	ACET235
ACSZ862	ACSZ863	ACMX1138*	ACCY4040NKS1	ACET235
ACSZ871	ACSZ861	ACMX1070		ACET235
ACSZ871	ACSZ863	ACMX1070	ACMX01603	ACET235
ACSZ871 & ACSZ400	ACSZ863	ACMX1070	ACCY4040NKS1	ACET235

* Spindles need to be cut down. See details below.

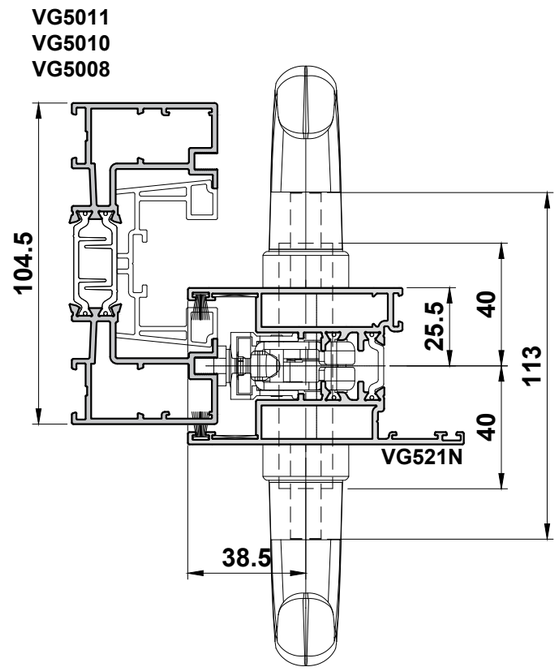

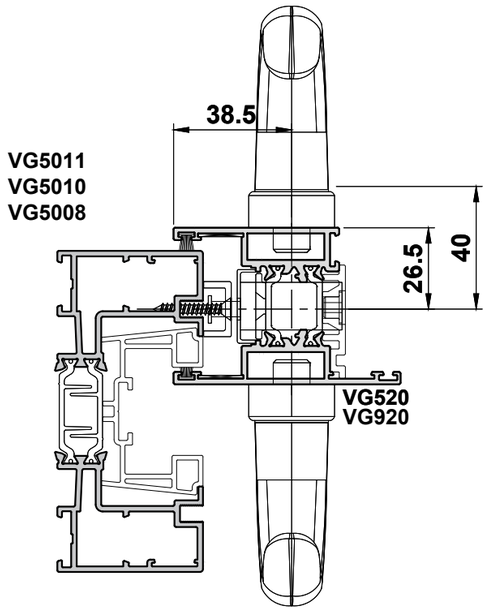

ACMX1138 - 138mm Spindle

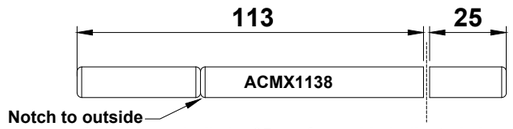

Cut down spindle by 25mm from side indicated above.

Do Not Scale From This Drawing

Sash to Sash Locking

VG520 + VG540 - VG520/VG920

SASH HEIGHT	LOCKS	KEEPS: INDIVIDUAL KEEPS: MIDDLE	KEEPS: INDIVIDUAL KEEPS: TOP / BOTTOM	KEEPS: FULL HEIGHT KEEP	KEEPS: FULL HEIGHT KEEP + 600mm	
2024 - 2223	ACSZ024			ACSZ122	ACSZ124	PAS24:2016
1824 - 2023	ACSZ025			ACSZ126	ACSZ128	
2224 - 2423	ACSZ026			ACSZ130	ACSZ132	
2024 - 2223	ACSZ007	ACSZ100	ACSZ101	ACSZ103	ACSZ105	
1824 - 2023	ACSZ008			ACSZ107	ACSZ109	
2224 - 2500*	ACSZ009			ACSZ111	ACSZ113	
	ACSZ010					
	EXT. / INT.				3 x	
Lever Handles	ACSZ800	ACSZ801	ACMX209	ACCY4040NKS1	ACSG070	
	ASCZ802	ACSZ803 / ACSZ830 †				
'D' Handles	ACSZ898 (L/R)	ACSZ895 (L/R)	ACMX209	ACCY4040NKS1		
	ACSZ899 (L/R)	ACSZ896 (L/R)		ACMX01603		
No External Handle	ACSZ400 + 2 x ACVS061	ACSZ803	ACMX009	ACCY4040NKS1	ACVS061 & ACMX867	
		ACSZ830 †				
		ACSZ895 (L/R)				
Pull Handle without External Cylinder	ACSZ823	ACSZ801	ACMX009	ACMX01603	ACSG070	
		ACSZ803				
		ACSZ830 †				
Flush Pull Handle without External Cylinder	ACSZ841	ACSZ801	ACMX009	ACMX01603	ACET220	
		ACSZ803				
		ACSZ830 †				

* ACVG752 shootbolts cannot be used on sash heights over 2423mm.

EXT.	INT.		
ACSZ882	ACSZ883	ACMX209	PAS24:2016
		3 x	
	ACIM442	M6 x 6 5	

For full details to achieve PAS24:2016, please see page E68 & Test Report 8247857

With Cylinder
Without Cylinder
† T Handle With Cylinder

LIFT & SLIDE

LIFT & SLIDE DRIVE GEAR	HIGH SECURITY LIFT & SLIDE DRIVE GEAR	HIGH SECURITY LIFT & SLIDE DRIVE GEAR
MAX 200 KG	MAX 270 KG	MAX 400 KG*
ACVG277	ACVG5276	ACVG5276
ACVG278	ACVG5277	ACVG5277
ACVG279	ACVG5278	ACVG5278

* Requires additional roller ACVG5287

LIFT & SLIDE: EXT.	INT.			2 x
ACSZ860	ACSZ861	ACMX1138*		ACET235
	ACSZ863			
ACSZ862	ACSZ861		ACMX01603	
	ACSZ863		ACCY4040NKS1	
ACSZ871	ACSZ861	ACMX1070		
	ACSZ863		ACMX01603	
ACSZ871 & ACSZ400	ACSZ863		ACCY4040NKSI	

* Spindles need to be cut down. See details below.

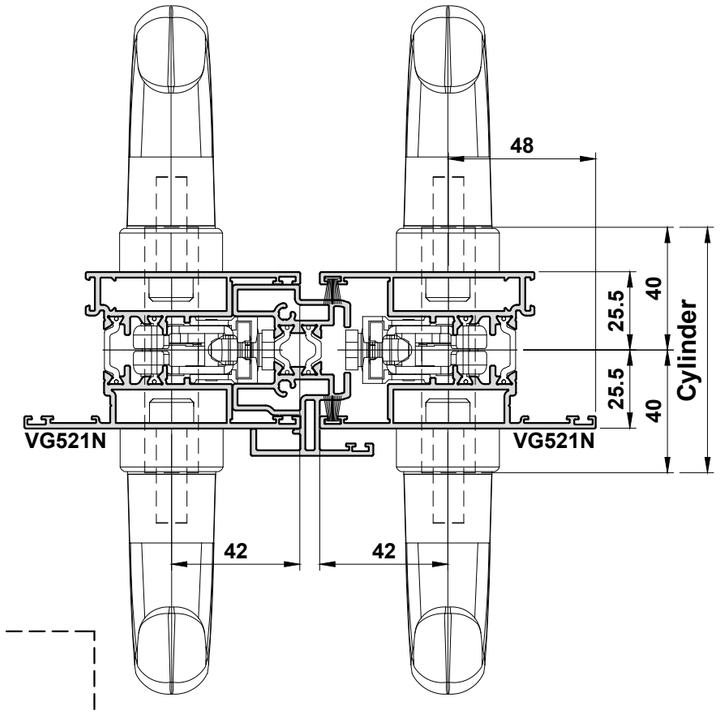

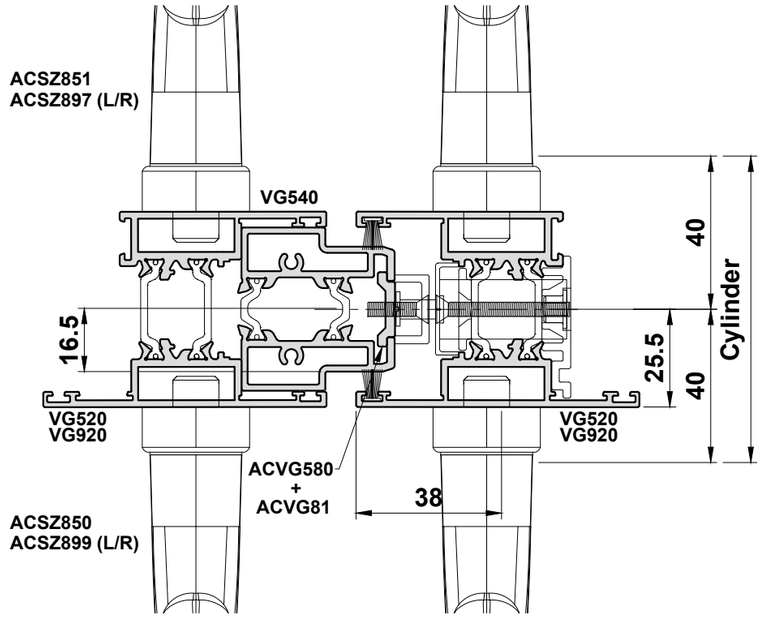

ACMX1138 - 138mm Spindle

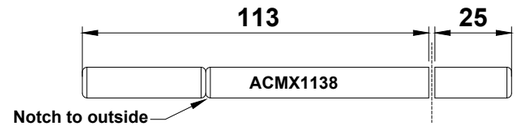

Cut down spindle by 25mm from side indicated above.

Do Not Scale From This Drawing

Sash to VG632 Locking

VG520 + VG632 - VG520/VG920

SASH HEIGHT	LOCKS	KEEPS			
		INDIVIDUAL KEEPS		FULL HEIGHT KEEP	FULL HEIGHT KEEP + 600mm
		MIDDLE	TOP / BOTTOM		
2024 - 2223	ACSZ007	ACSZ100	ACSZ101	ACSZ103	ACSZ105
1824 - 2023	ACSZ008			ACSZ107	ACSZ109
2224 - 2500*	ACSZ009			ACSZ111	ACSZ113
	ACSZ010				
	EXT.	INT.			3 x
Lever Handles		ACSZ801	ACMX009	ACMX01603	ACVS061 & ACMX867
		ACSZ803			
		ACSZ830			
'D' Handles		ACSZ895 (L/R)			
		ACSZ896 (L/R)			

* ACVG752 shootbolts cannot be used on sash heights over 2423mm.

With Cylinder
Without Cylinder
T Handle With Cylinder

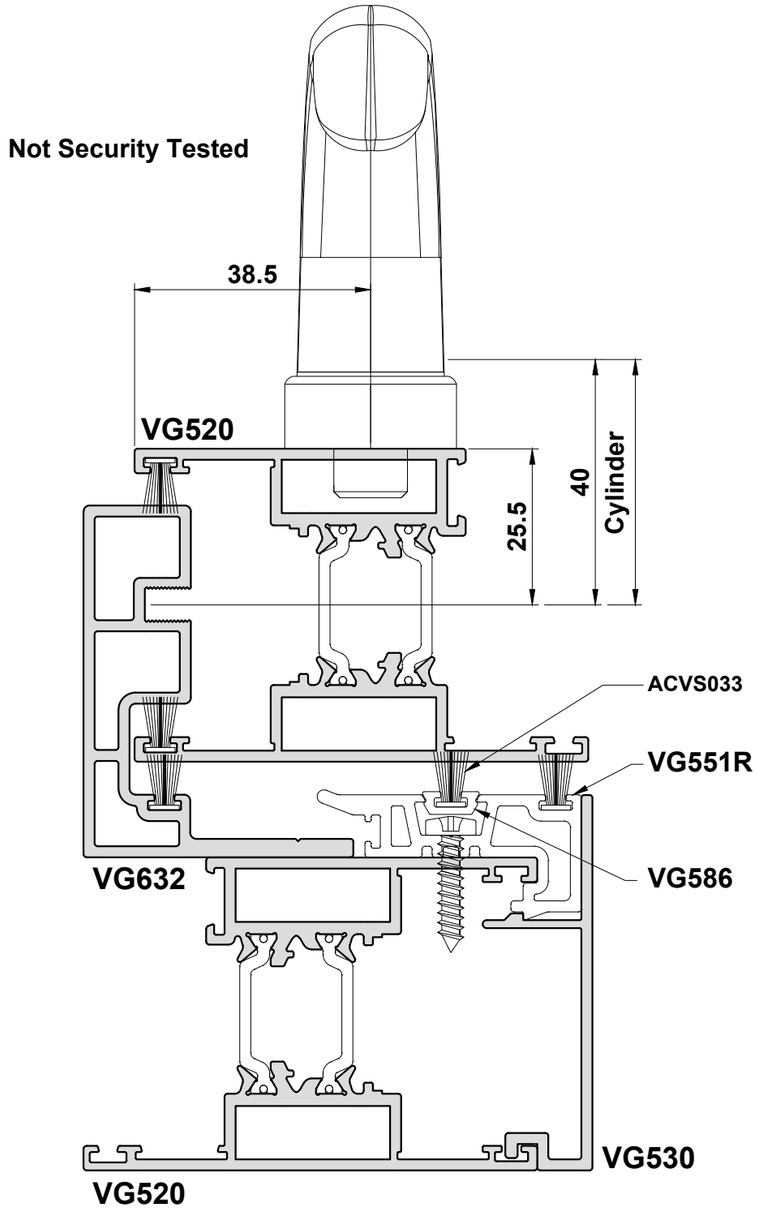

Do Not Scale From This Drawing

ACVG305 Fitting Detail

Please note that ACVG305 lock has not been tested for weather or security.

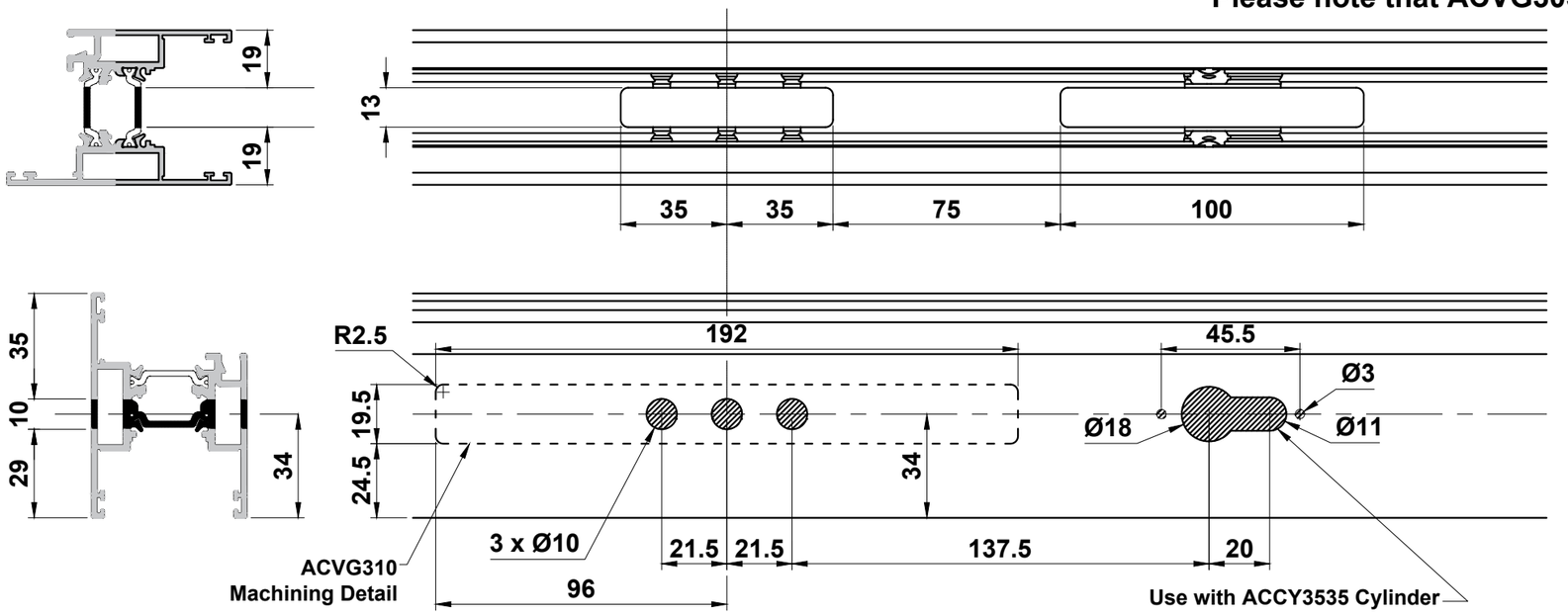

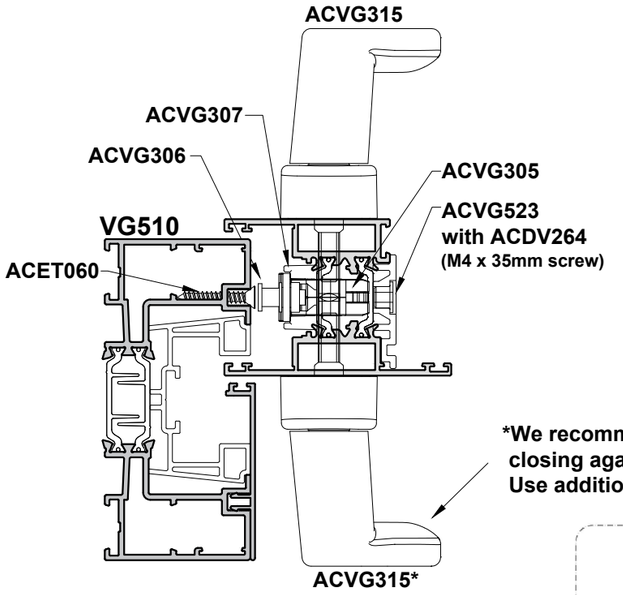

*We recommend using ACVG315 when closing against a jamb as shown.
Use additional lock fixing to restrict to 90°.

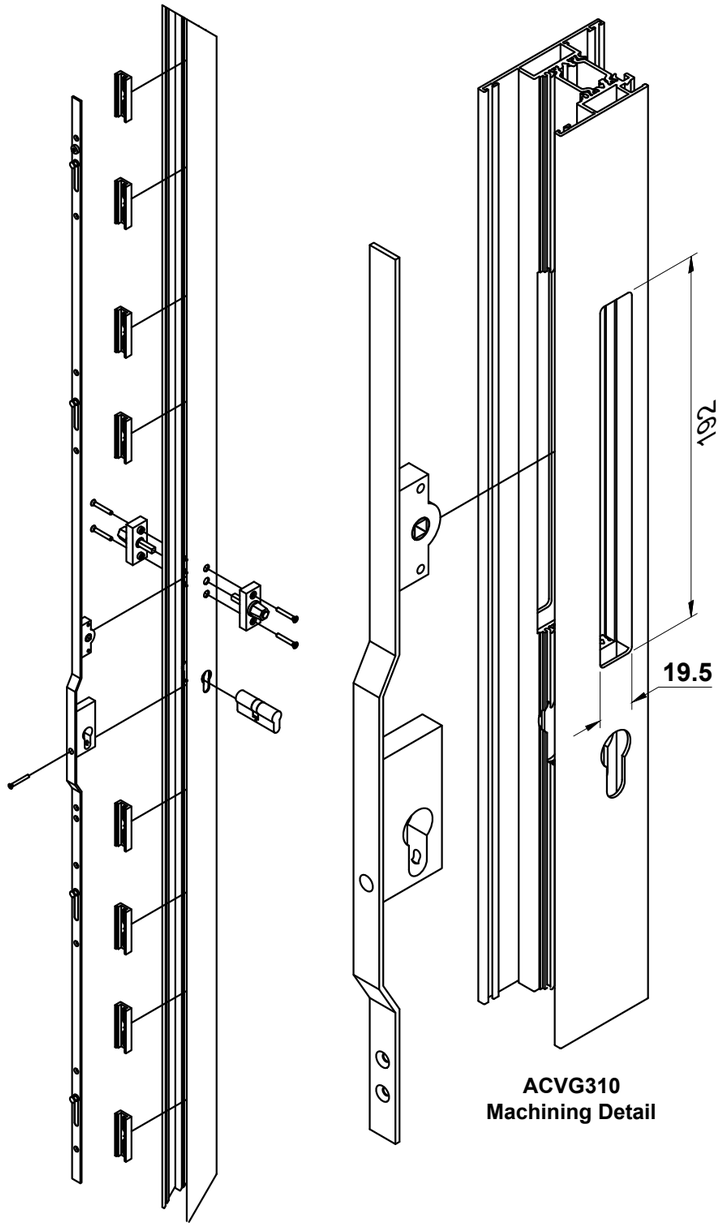

Do Not Scale From This Drawing

Interlock Reinforcement Details

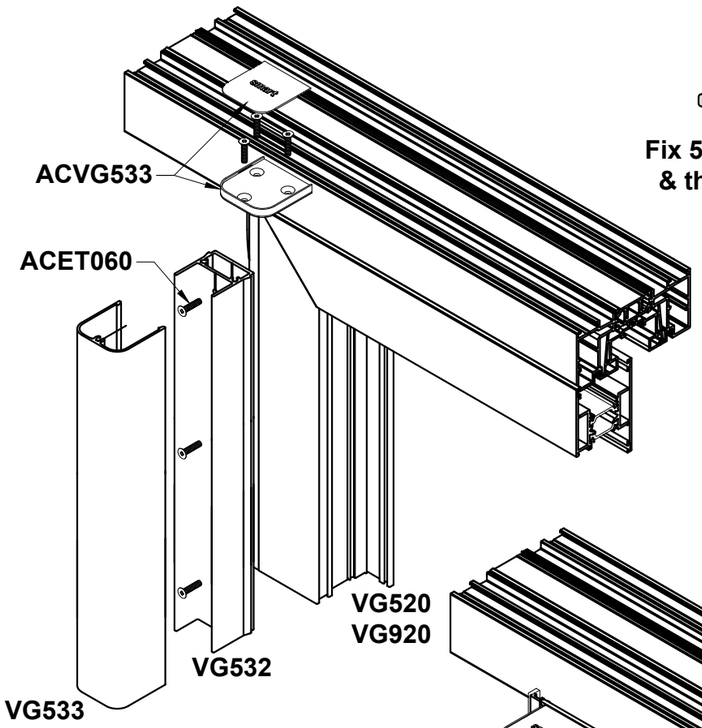

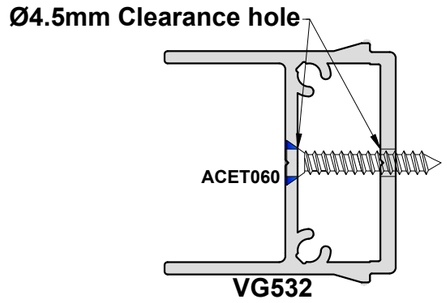

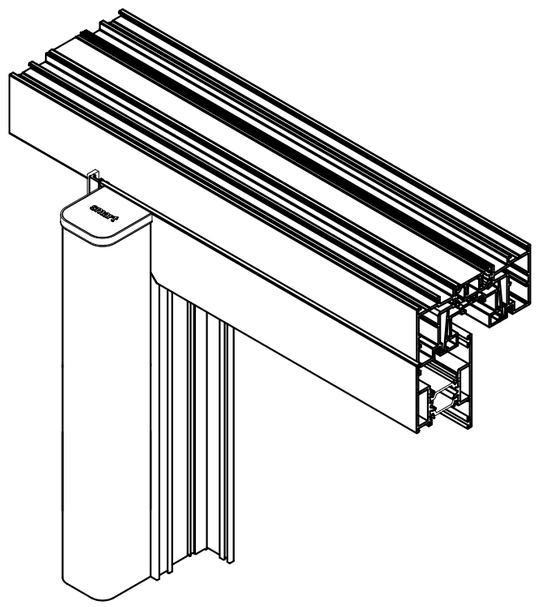

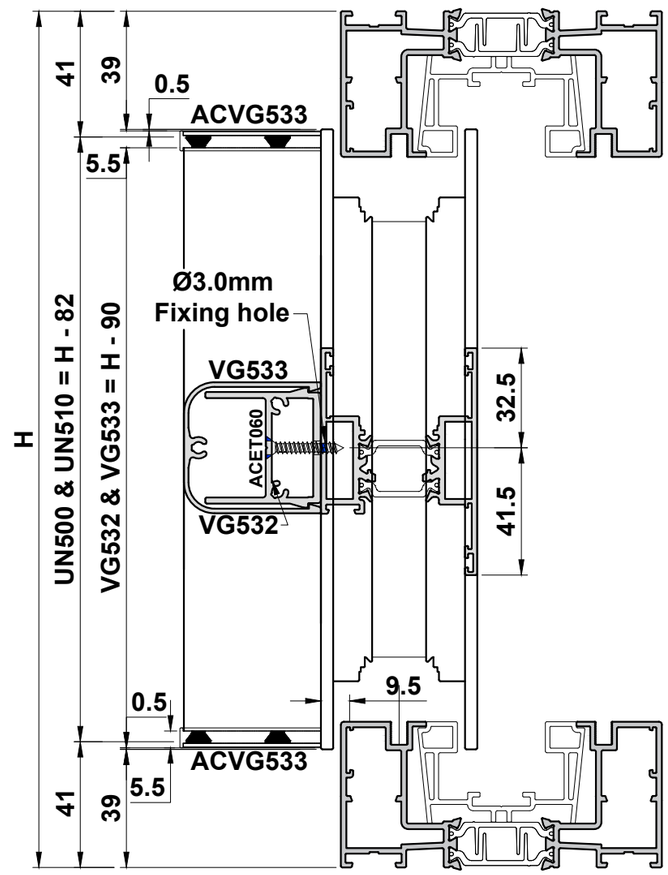

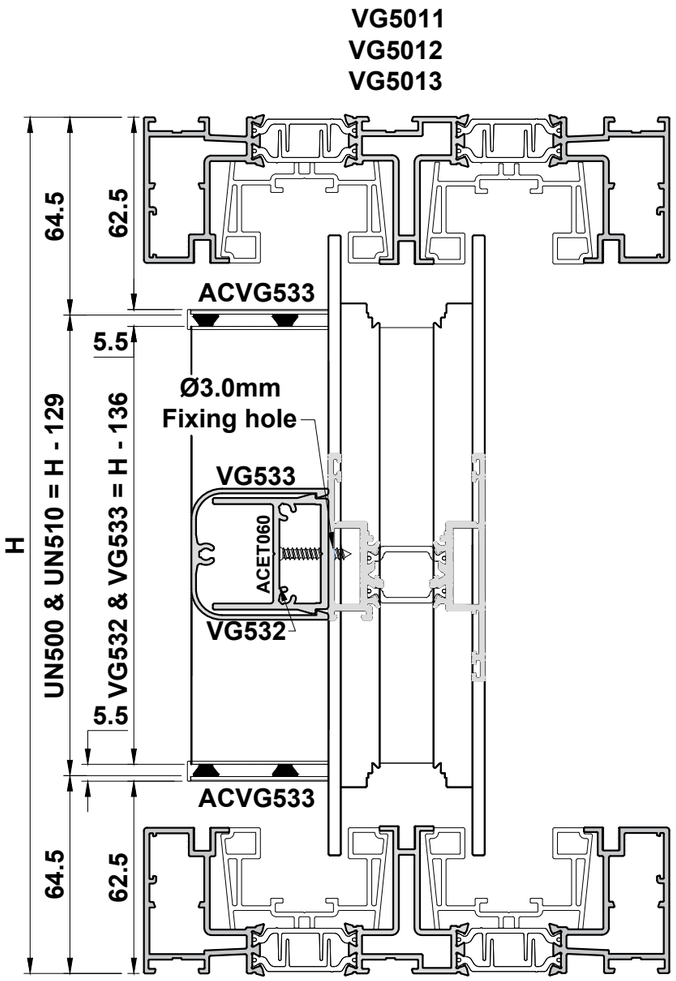

Do Not Scale From This Drawing

Slim Interlock Details

IMPORTANT NOTE: SLIM INTERLOCK IS NOT COMPATIBLE WITH THE VG5023 OR VG5024 SASH

VG520 & VG920 Preparation

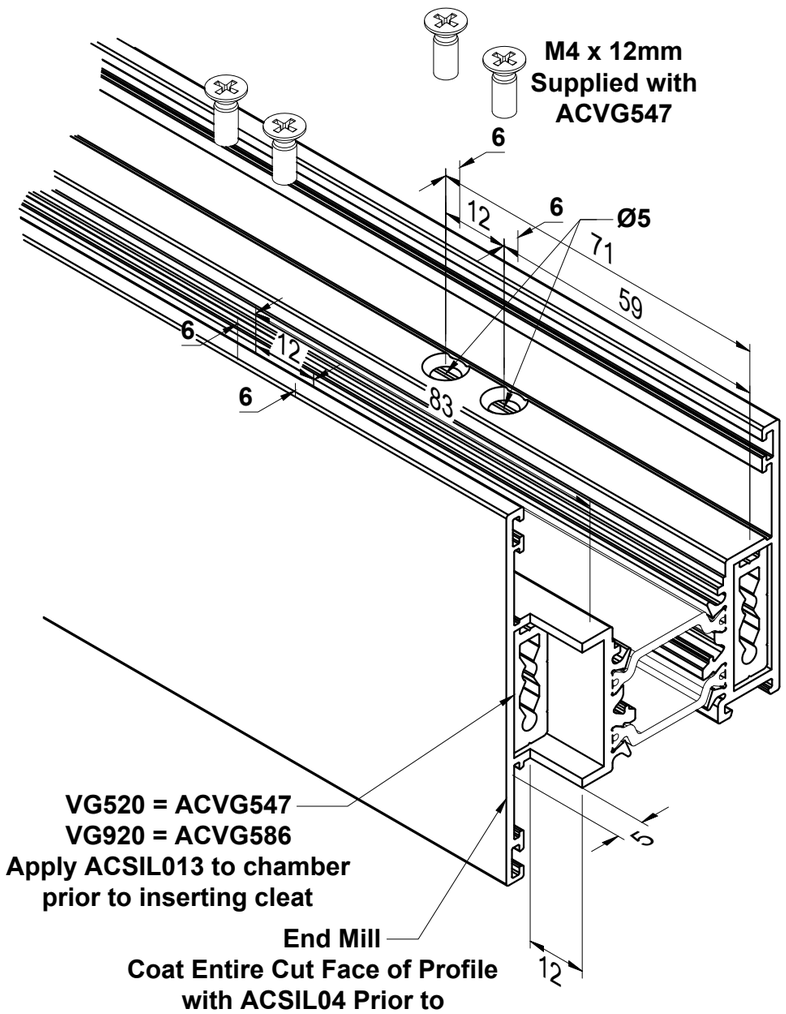

Important Fabrication Note:
Please ensure bottom joint is fully sealed after assembly using ACSIL04.

Slim Interlock Stile Preparation

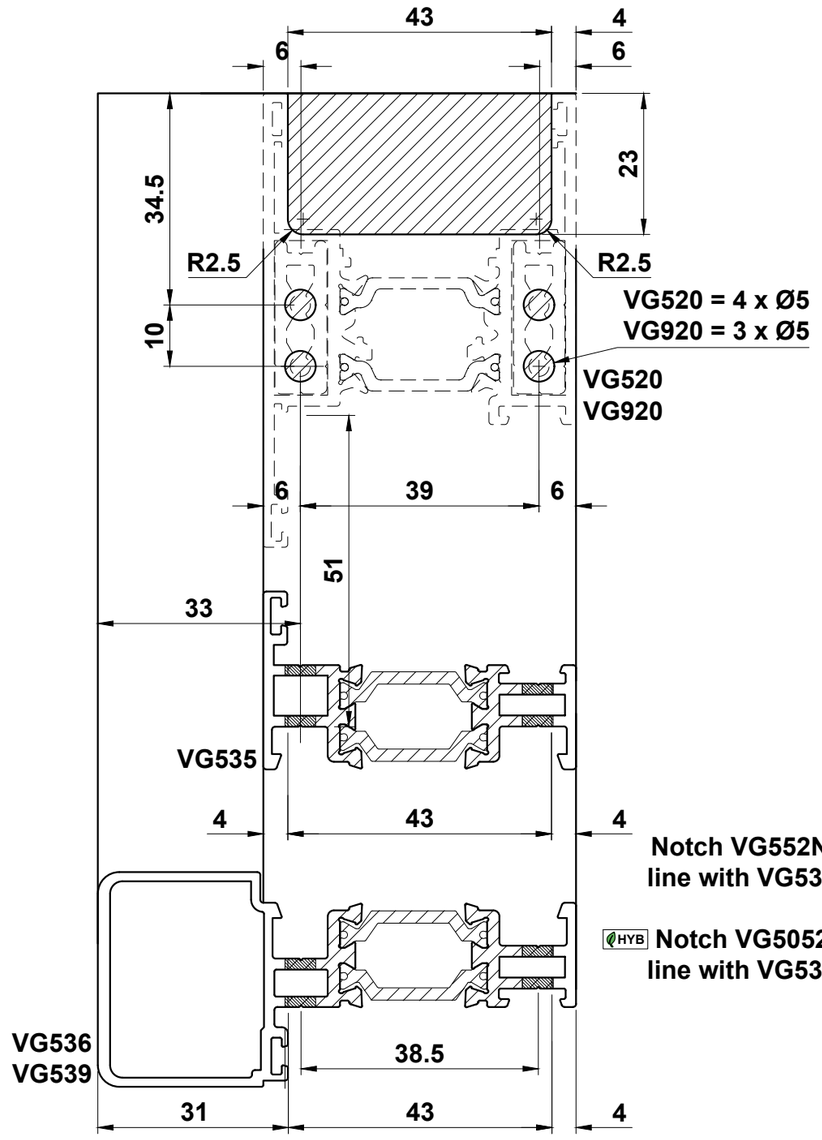

Slim Interlock Cover Cap Preparation

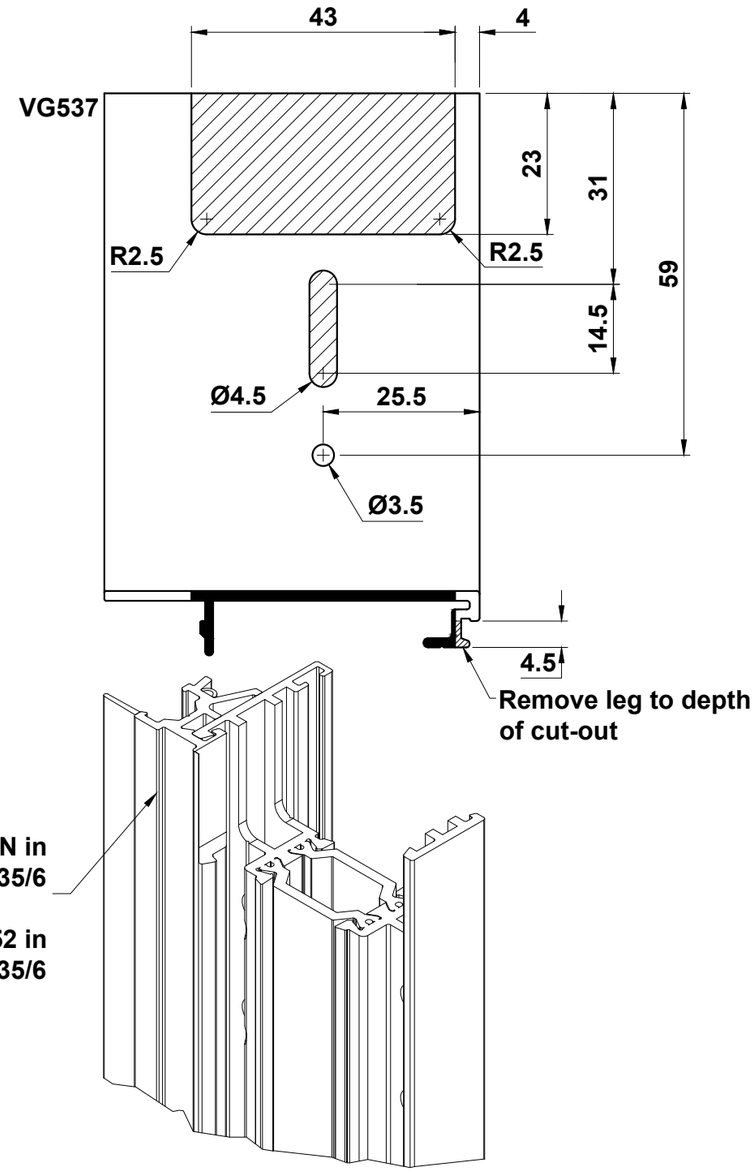

Do Not Scale From This Drawing

VG537 Preparation with VG536 or VG539

IMPORTANT NOTE: SLIM INTERLOCK IS NOT COMPATIBLE WITH THE VG5023 OR VG5024 SASH

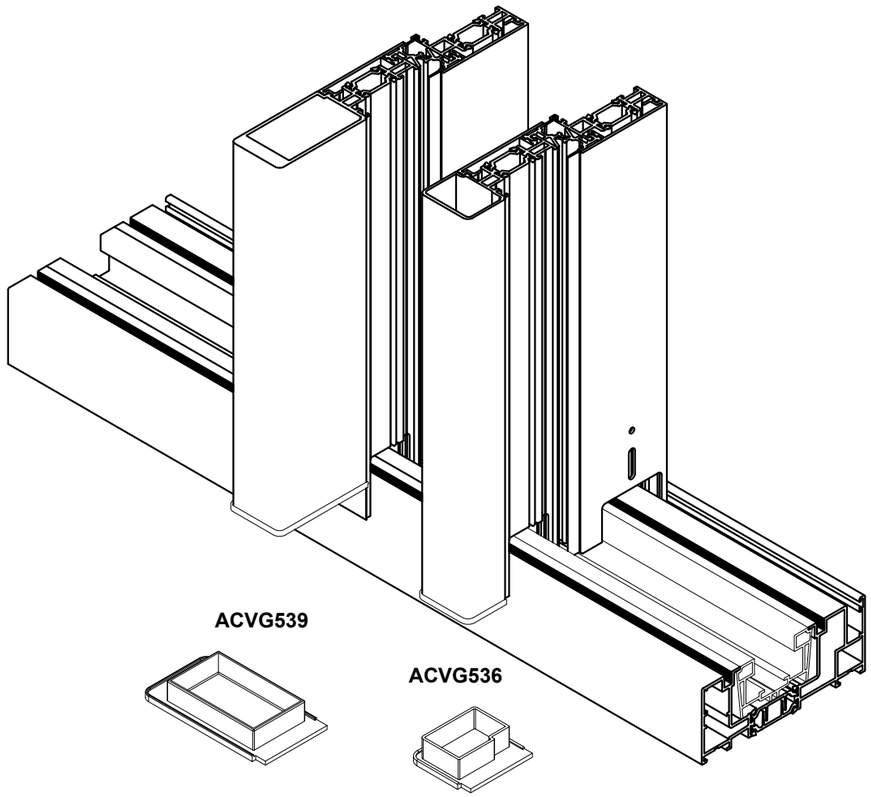

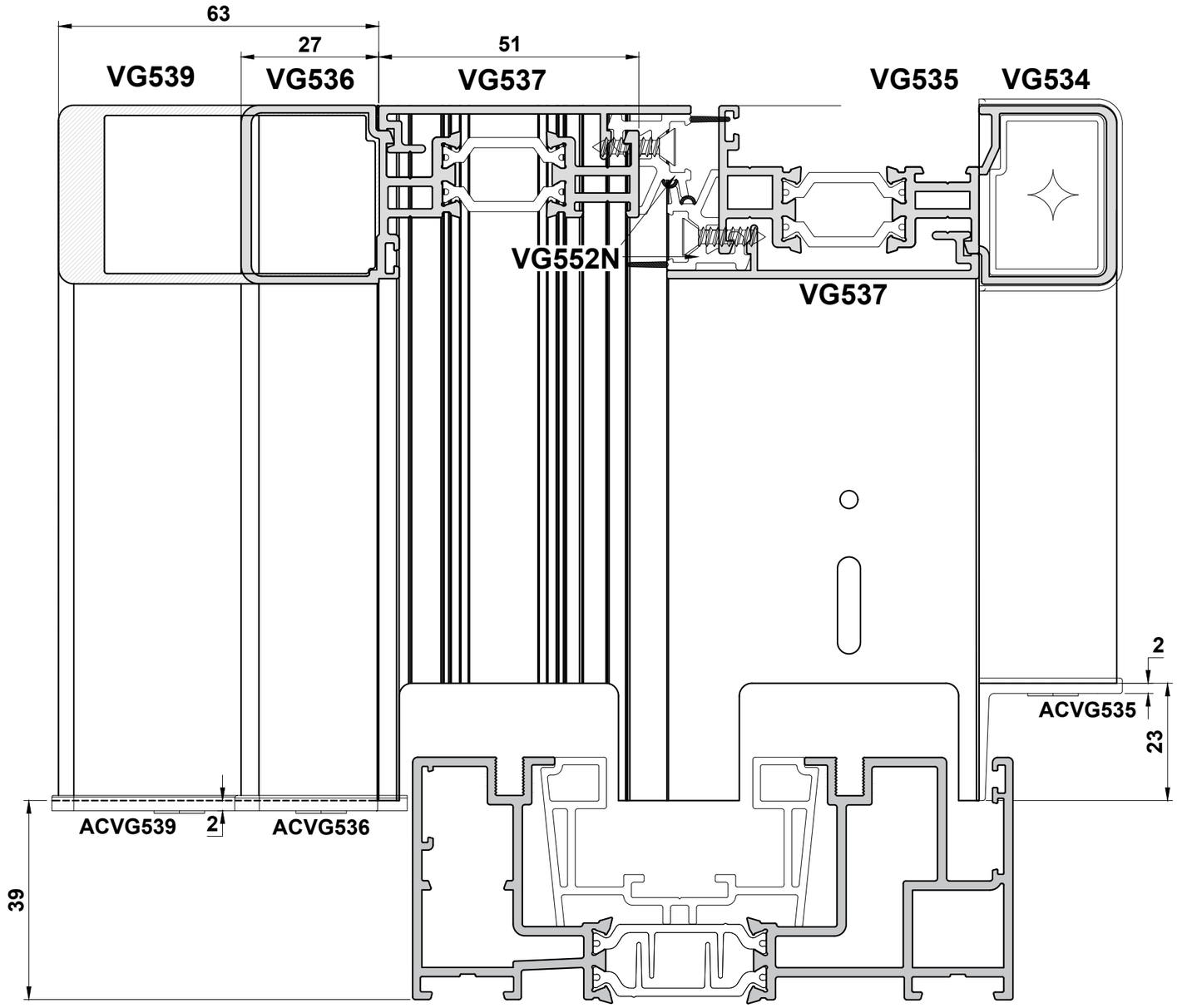

Do Not Scale From This Drawing

VG537 Preparation with VG536 or VG539 (Continued)

IMPORTANT NOTE: SLIM INTERLOCK IS NOT COMPATIBLE WITH THE VG5023 OR VG5024 SASH

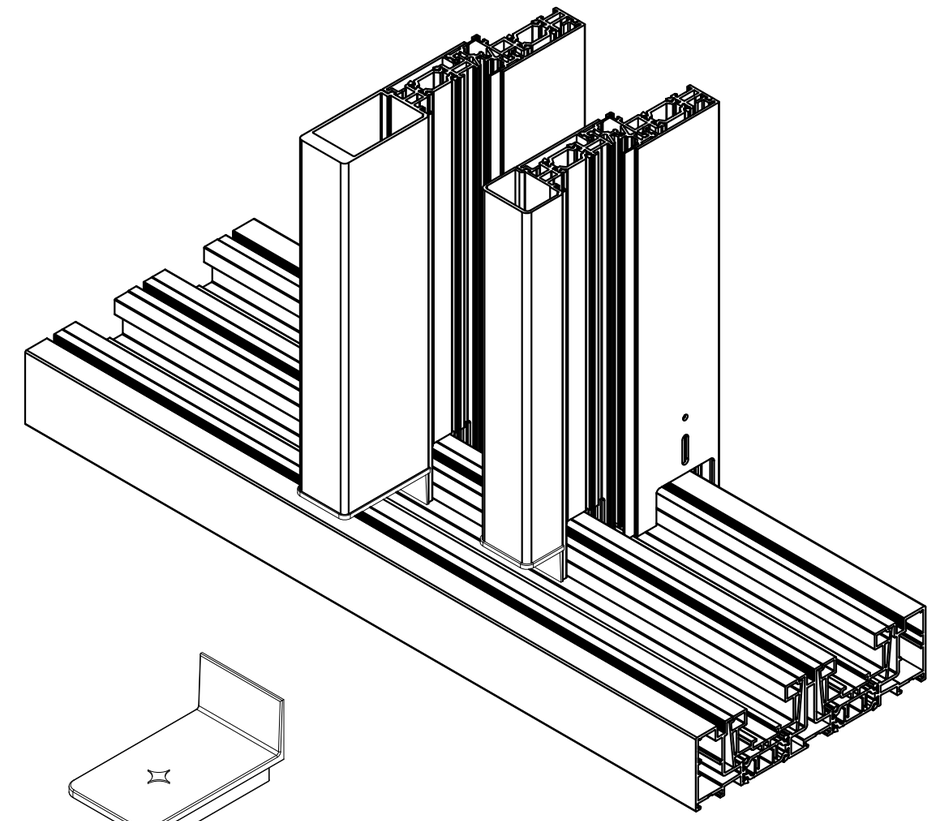

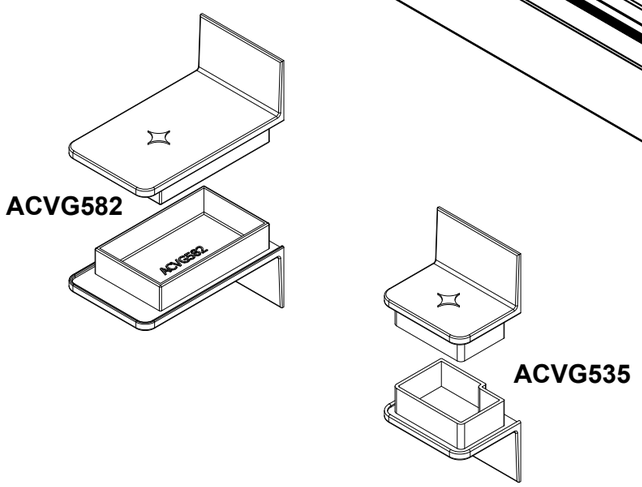

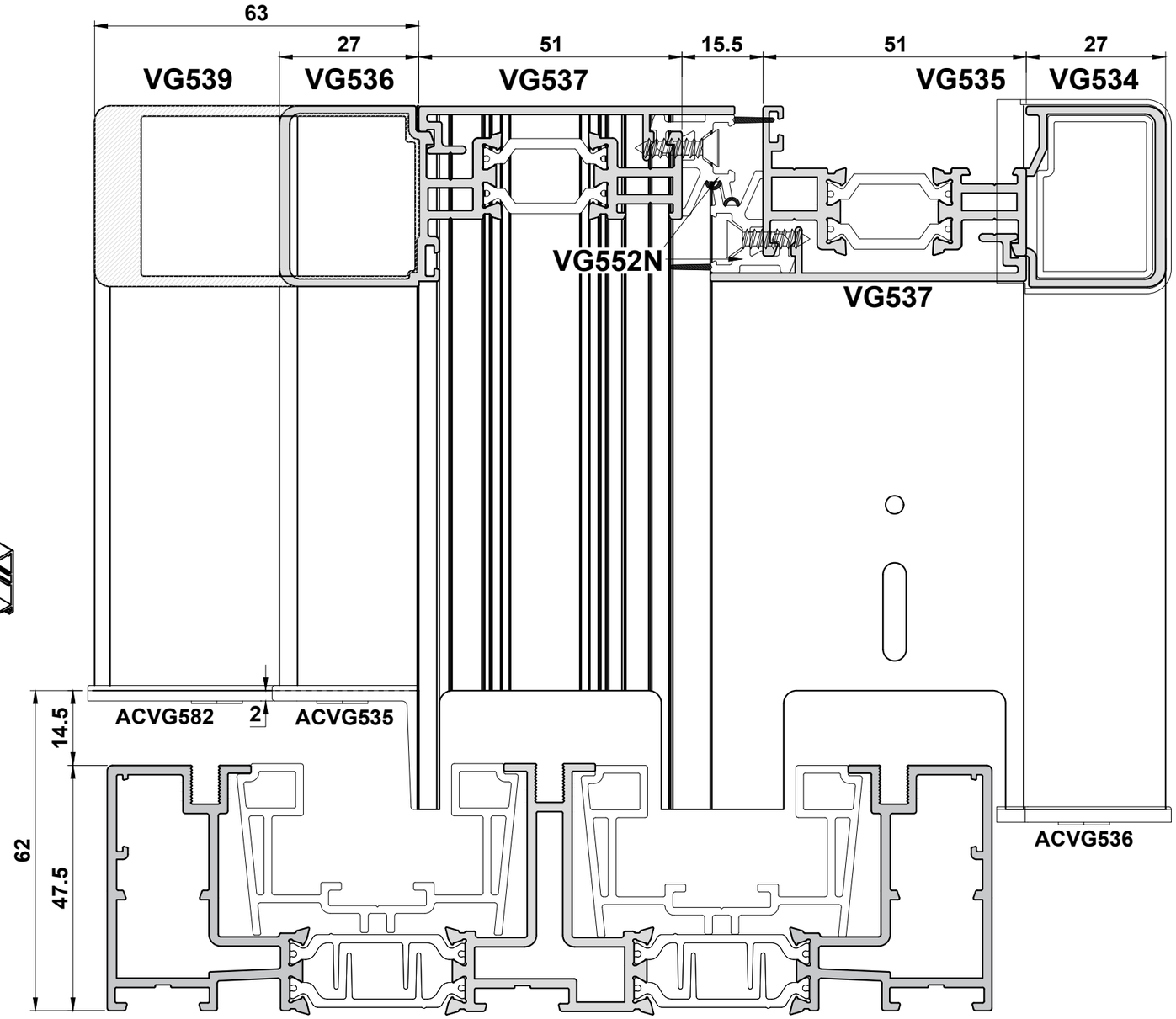

Do Not Scale From This Drawing

Slim Interlock Assembly

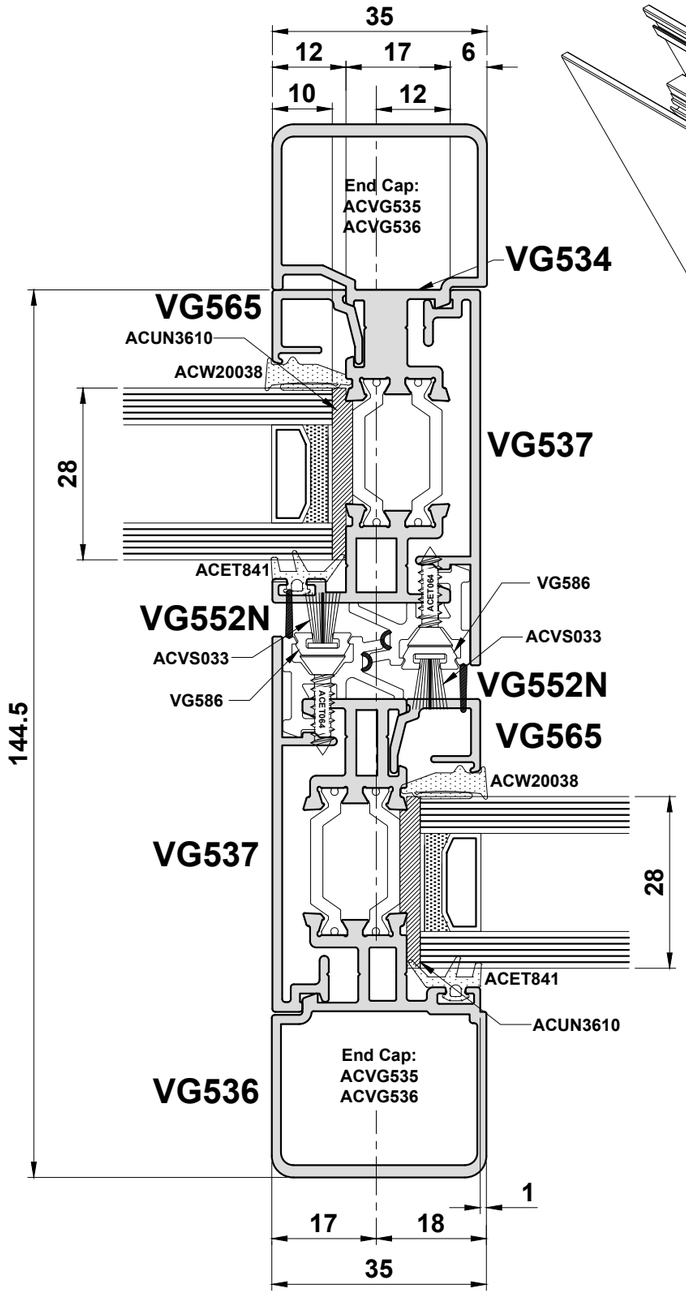

IMPORTANT NOTE: SLIM INTERLOCK IS NOT COMPATIBLE WITH THE VG5023 OR VG5024 SASH

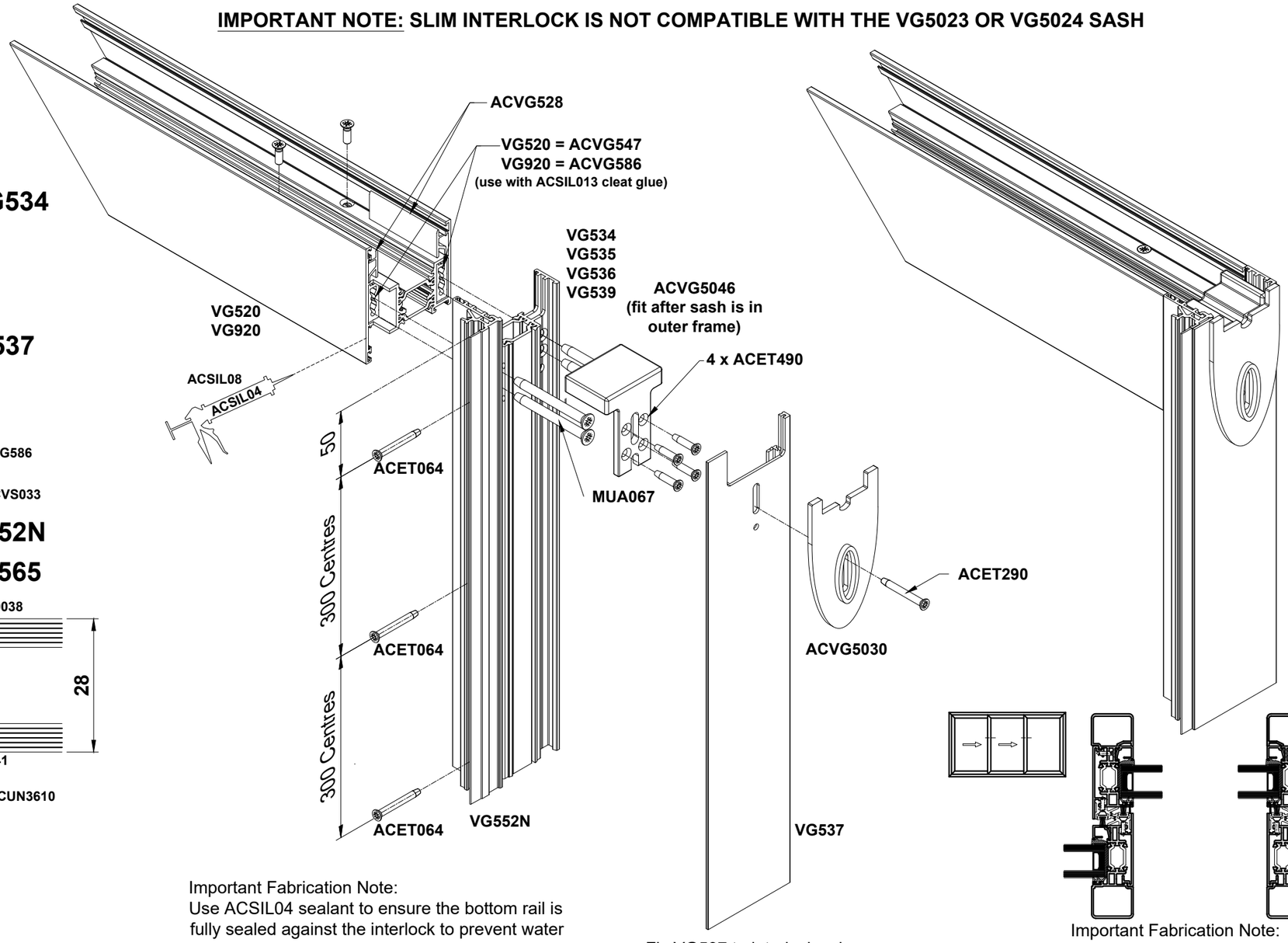

Important Fabrication Note:
Use ACSIL04 sealant to ensure the bottom rail is fully sealed against the interlock to prevent water egress.

Fix VG537 to interlock using ACET064 screws at 300mm centres.

Important Fabrication Note:
Where VG534 is used on both sides of a sash, it must be factory glazed. The VG534 jambs need to be bonded and assembled around the unit.

Do Not Scale From This Drawing

Slim line Interlock Bonding Method

IMPORTANT NOTE: SLIM INTERLOCK IS NOT COMPATIBLE WITH THE VG5023 OR VG5024 SASH

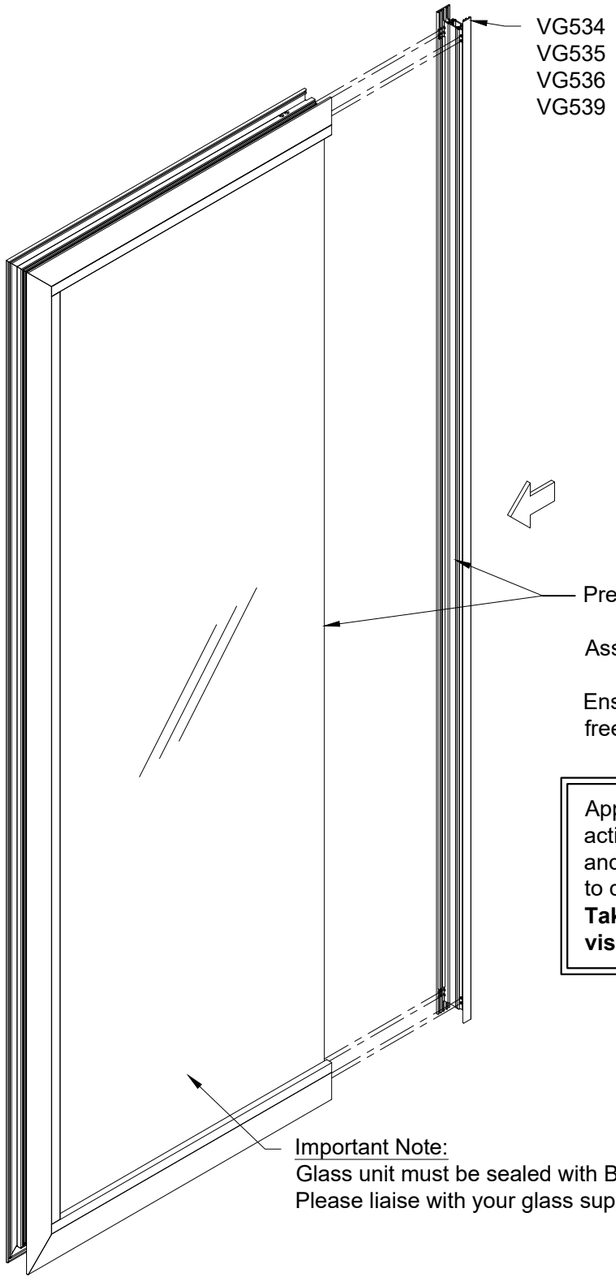

ACUN3610 is a high quality single component adhesive that provides a strong bond between the Butyl sealed unit and frame.

We recommend glazing the sash in the workshop at least a day before installation so it can be allowed to set.

However fixed panes should be glazed on site to allow for fitting.

Preparation:

Assemble frame.

Ensure area of bonding is clean, dry and free from any dust or surface contamination.

Apply a small coating of ACUN3612 surface activator to the interlock glazing channel and the bond area of the glass only. Allow to dry, leaving a slight residue.
Take care not to apply ACUN3612 to any visible surfaces.

Important Note:
Glass unit must be sealed with Butyl & without tape.
Please liaise with your glass supplier regarding the application.

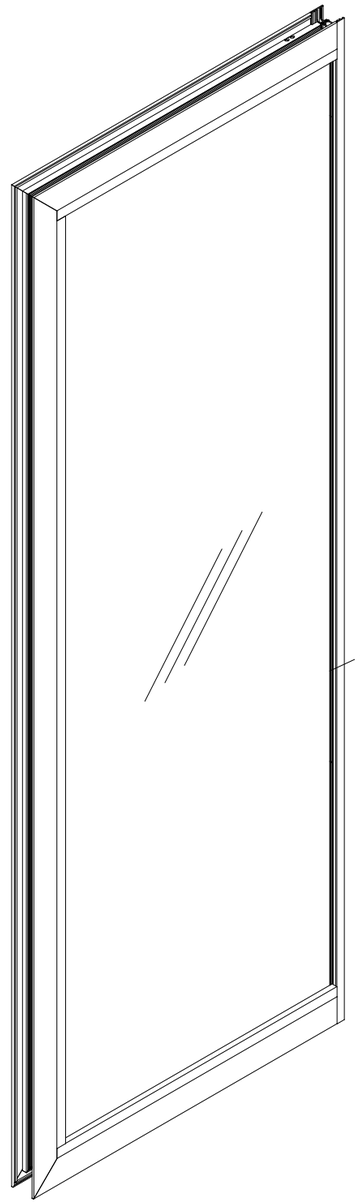

Bonding:

After preparation, apply ACUN3610 single component sealant into gap between frame and glass as detailed below (Detail A)

ACUN3610 must be applied to the full height of the unit.

Pack glass to ensure it is positioned correctly within the sash. A sash clamp should be used to ensure the interlock is held flat while ACUN3610 sets.

Leave to set overnight.

Detail A
Scale 1:1

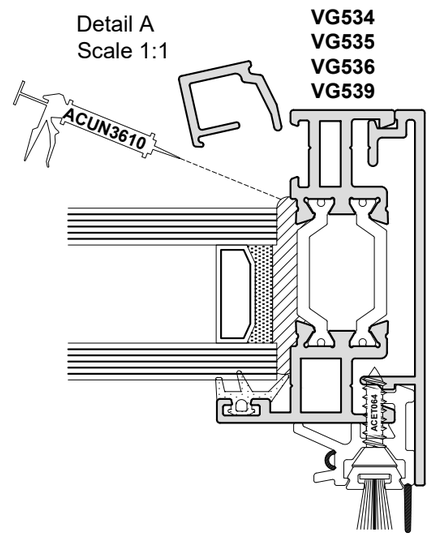

Do Not Scale From This Drawing

Slim line Interlock Tape Method

It is <u>strongly</u> recommended that where possible the bonding method on page E25 is used as this provides a stronger bond.

Where workshop glazing is not possible ACVG537 30 x 4mm adhesive glazing tape must be used.

ACVG537 needs be applied to the full height of the glazing chamber of any of the slim interlocks (VG534*, VG535, VG536 or VG539). The adhesion between the glass and the frame prevents any visible deflection of the profile.

*Where VG534 is used on both sides of a sash, it must be factory glazed. The VG534 jambs need to be bonded and assembled around the unit**.**

It is advised that ACMX09765 Aluminum cleaner is used to clean the area of adhesion prior to tape application with a clean non abrasive cloth.

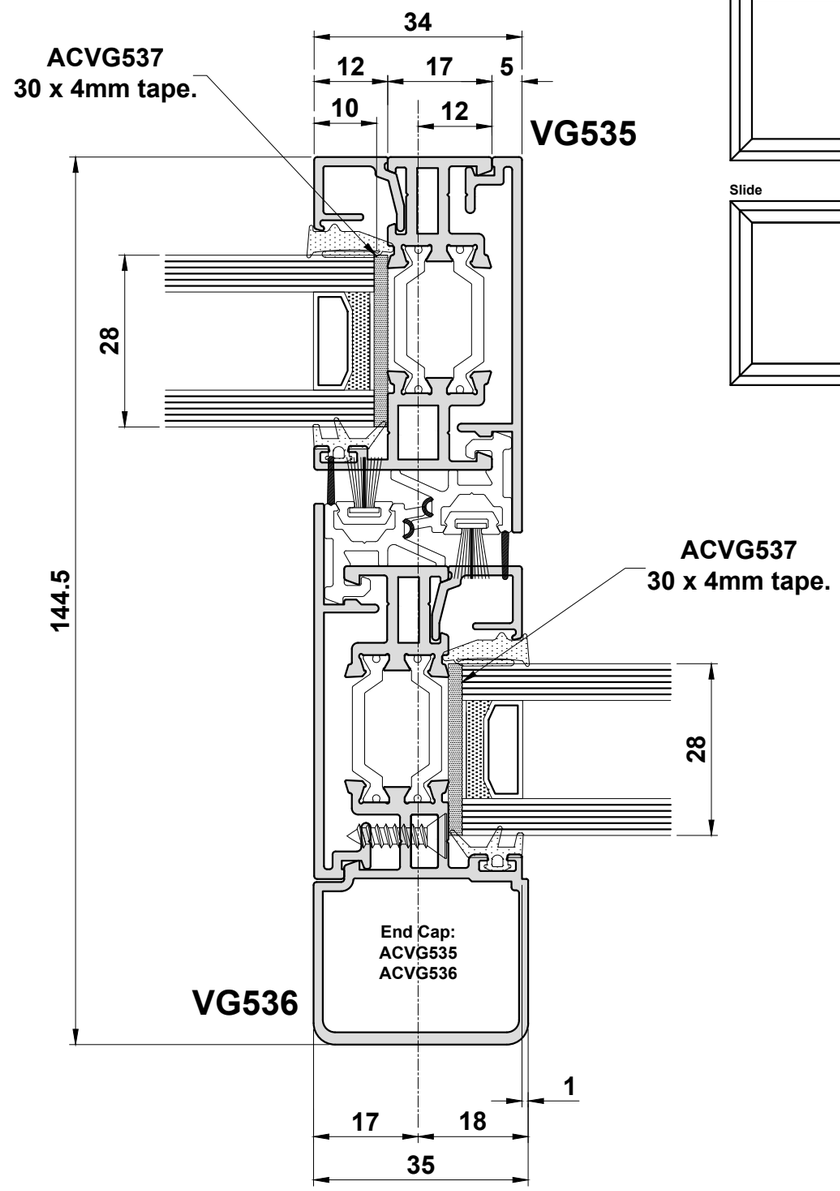

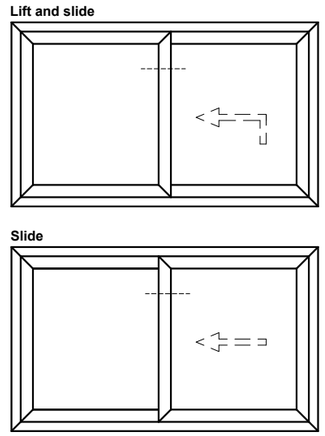

<u>IMPORTANT NOTES</u>

1. **Under no circumstances should taped or foil edged glass units be used for this application.**
2. **The polyamide strip to the glazing side must be free from paint to ensure the a strong bond.**

Do Not Scale From This Drawing

VG5052 Details HYB

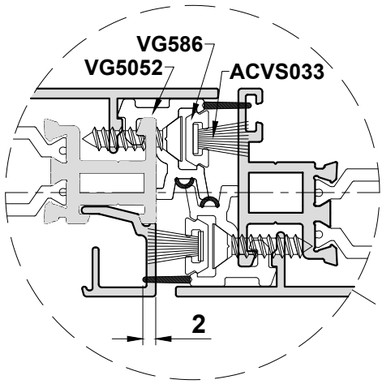

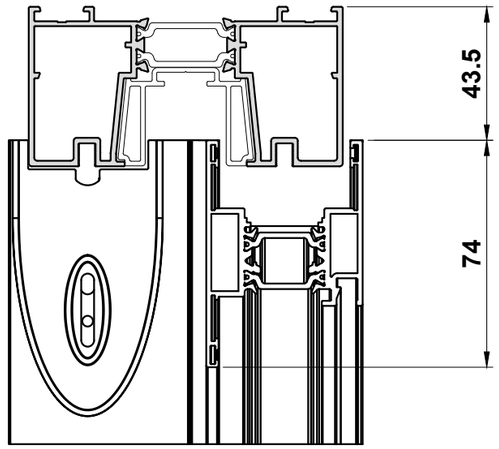

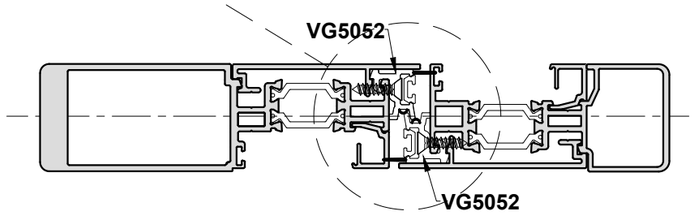

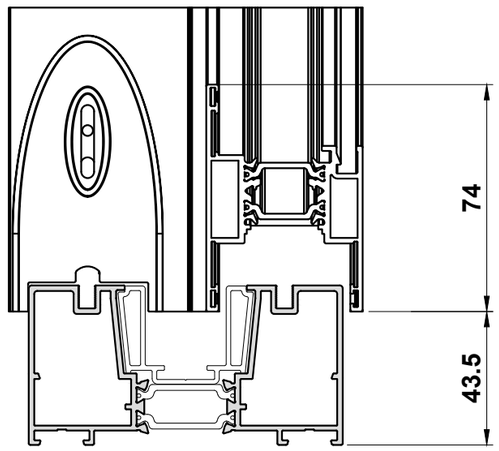

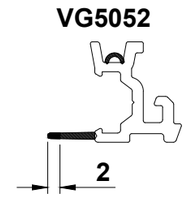

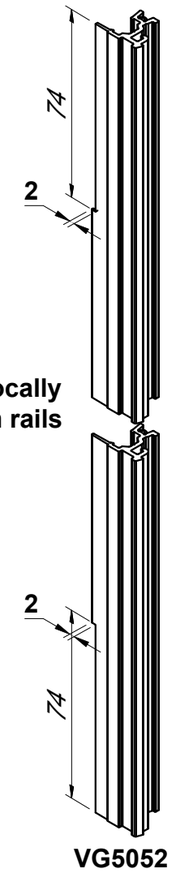

Notch rubber locally
to top & bottom rails

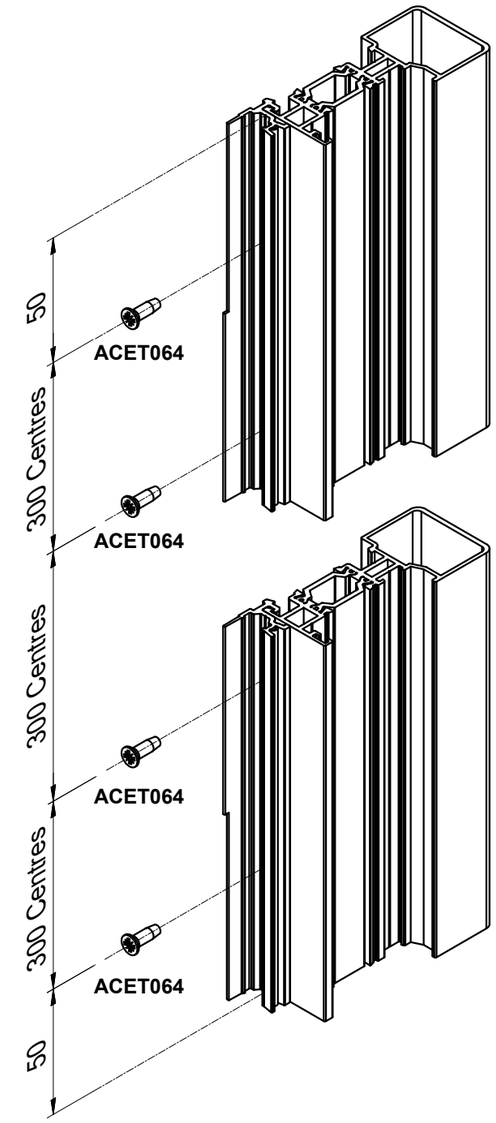

Do Not Scale From This Drawing

20mm Interlock Assembly

ACVG5032 & ACVG597 Position

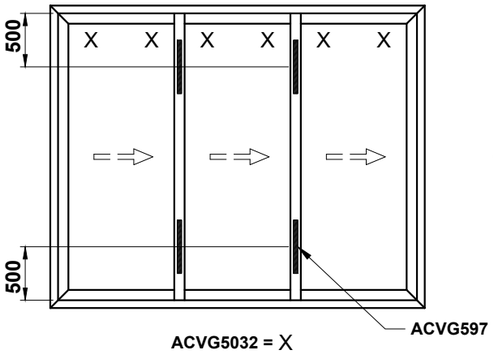

Anti-Lift Block Application
For sliding panes, place additional ACVG5032 opposite to the rollers, when PAS 24 is required.

IMPORTANT NOTE: SLIM INTERLOCK IS NOT COMPATIBLE WITH THE VG5023 OR VG5024 SASH

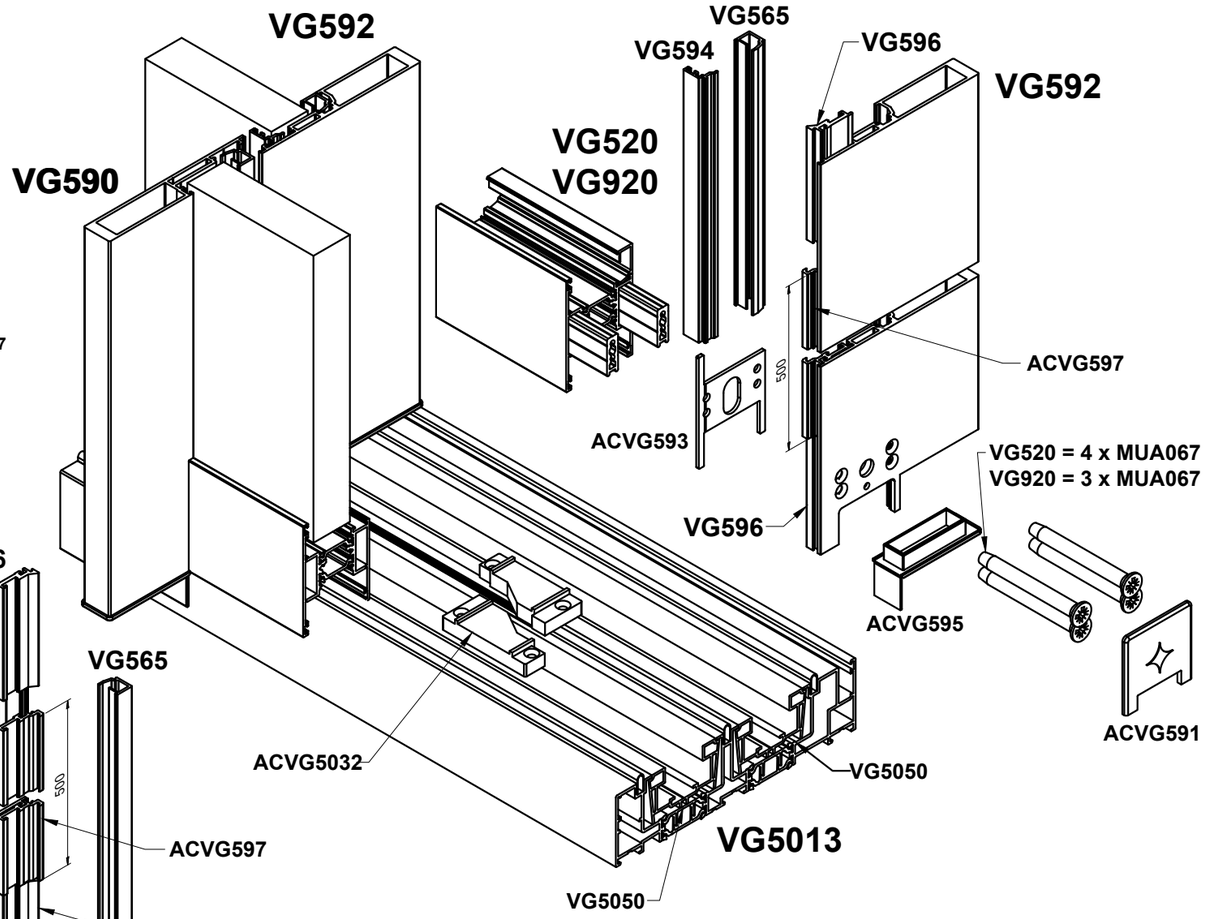

ACVG5032 Slim Interlock Plug Application
(Top & bottom)

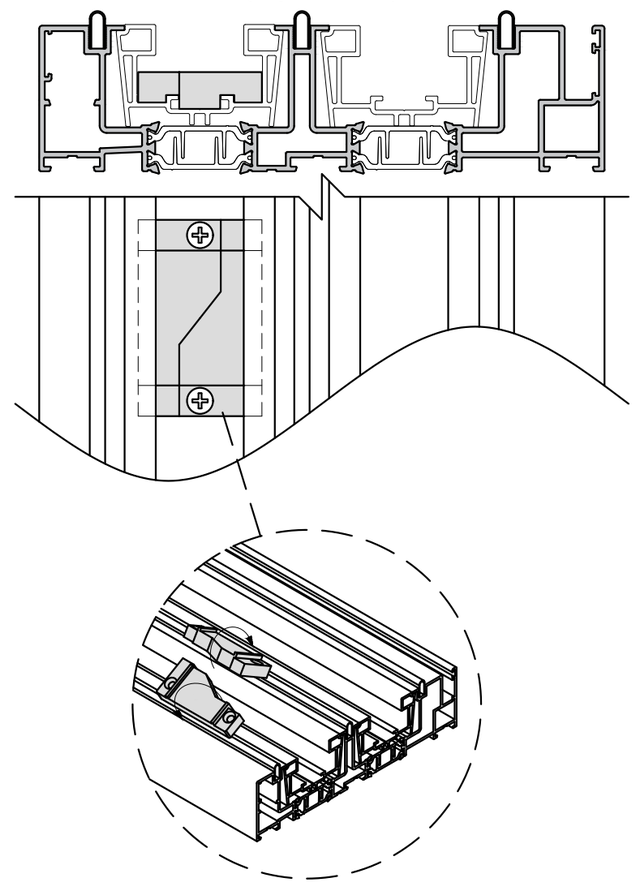

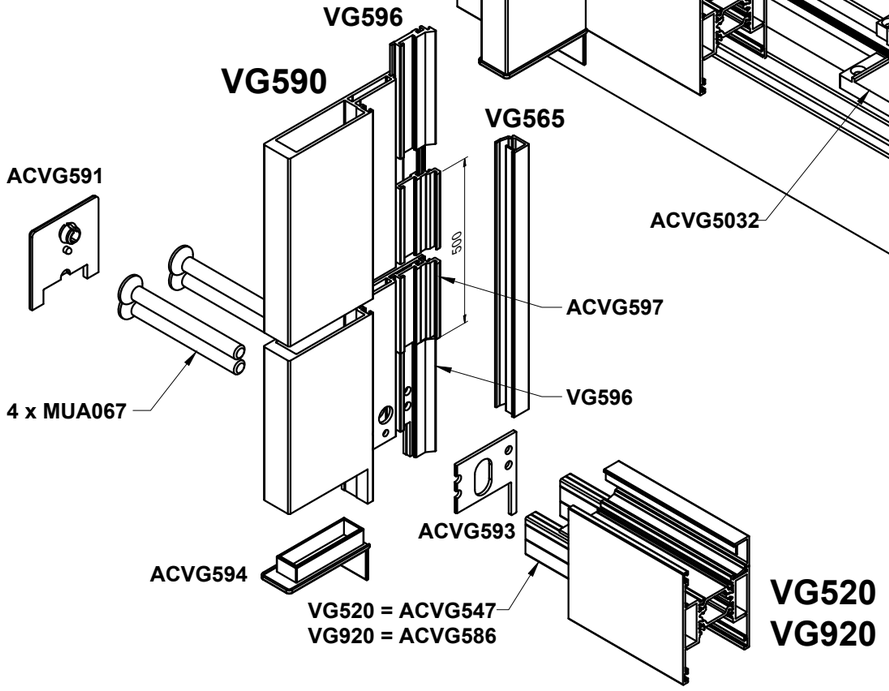

VG520 & VG920 External End mill detail

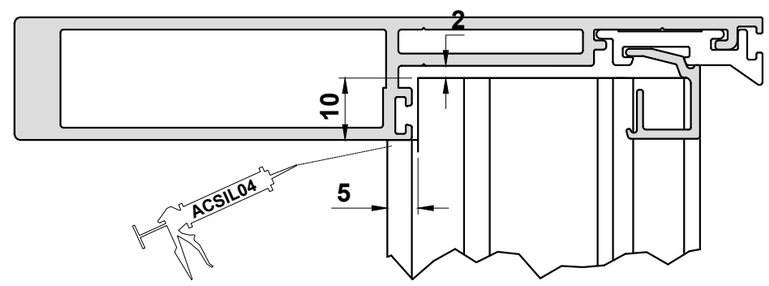

Do Not Scale From This Drawing

VG590 & VG592 Preparation with VG520

IMPORTANT NOTE:
SLIM INTERLOCK IS NOT COMPATIBLE WITH THE VG5023 OR VG5024 SASH

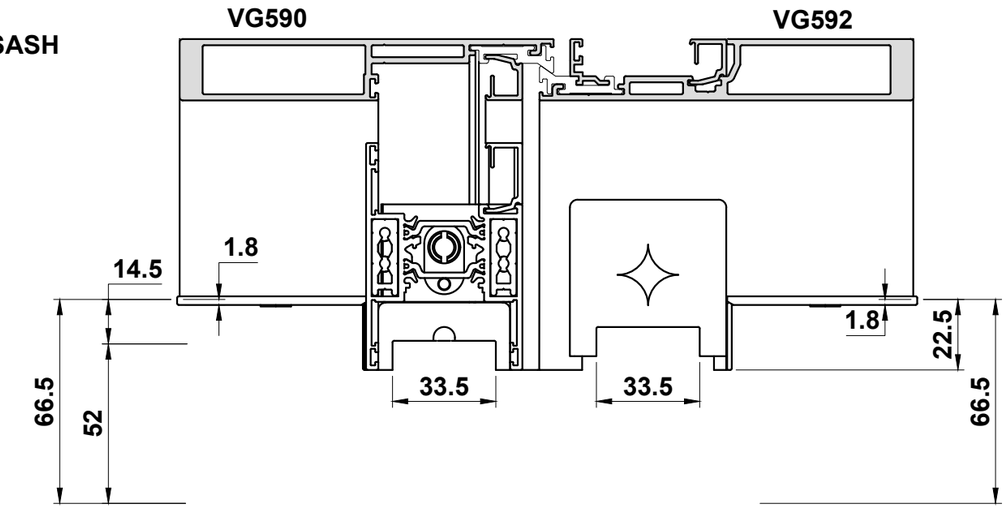

Note
Prepare VG596 using ACVG596, then slide into VG590 & VG592.

VG590 Preparation (Top & bottom)

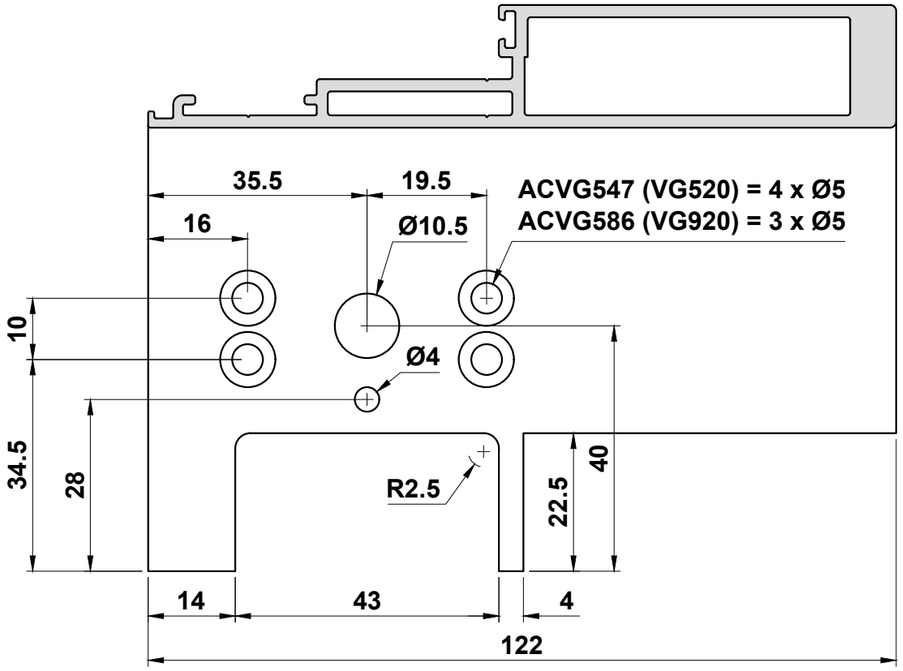

VG592 Preparation (Top & bottom)

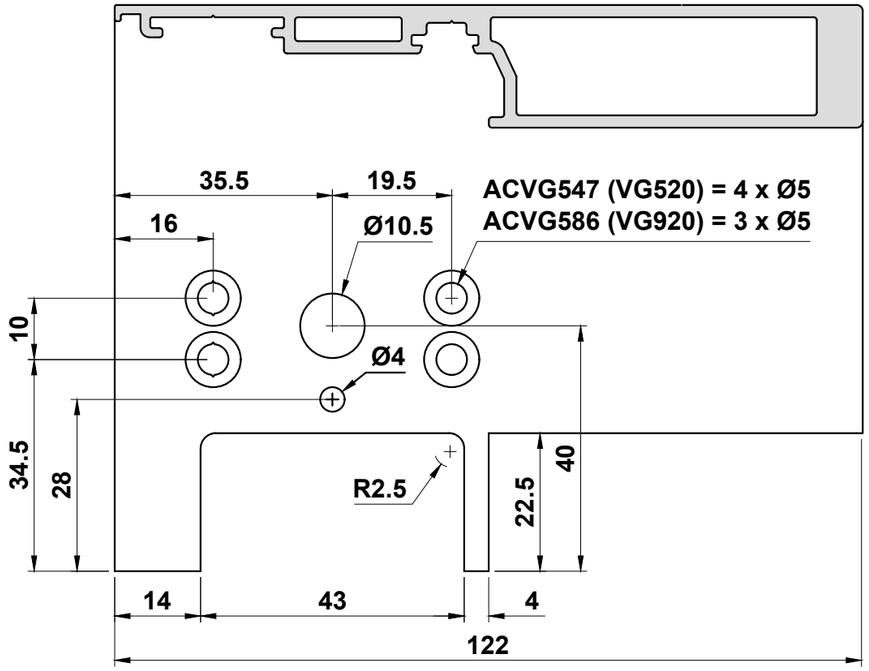

VG596 Preparation (Top & bottom)

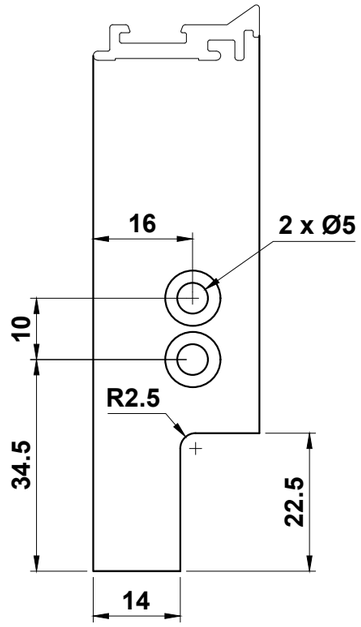

Do Not Scale From This Drawing

20 mm Interlock Bonding Method

IMPORTANT NOTE: SLIM INTERLOCK IS NOT COMPATIBLE WITH THE VG5023 OR VG5024 SASH

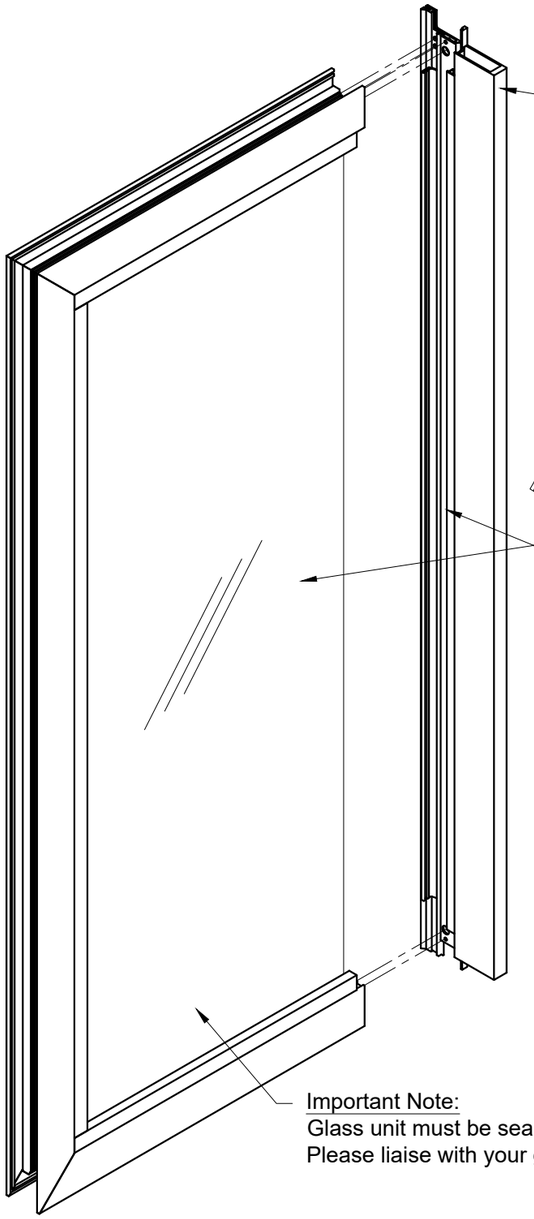

ACUN3610 is a high quality single component adhesive that provides a strong bond between the Butyl sealed unit and frame.

We recommend glazing the sash in the workshop at least a day before installation so it can be allowed to set.

However fixed panes should be glazed on site to allow for fitting.

Preparation:

Assemble frame.

Ensure area of bonding is clean, dry and free from any dust or surface contamination.

Apply a small coating of ACUN3612 surface activator to the interlock glazing channel and the bond area of the glass only. Allow to dry, leaving a slight residue.
Take care not to apply ACUN3612 to any visible surfaces.

Important Note:
Glass unit must be sealed with Butyl & without tape.
Please liaise with your glass supplier regarding the application.

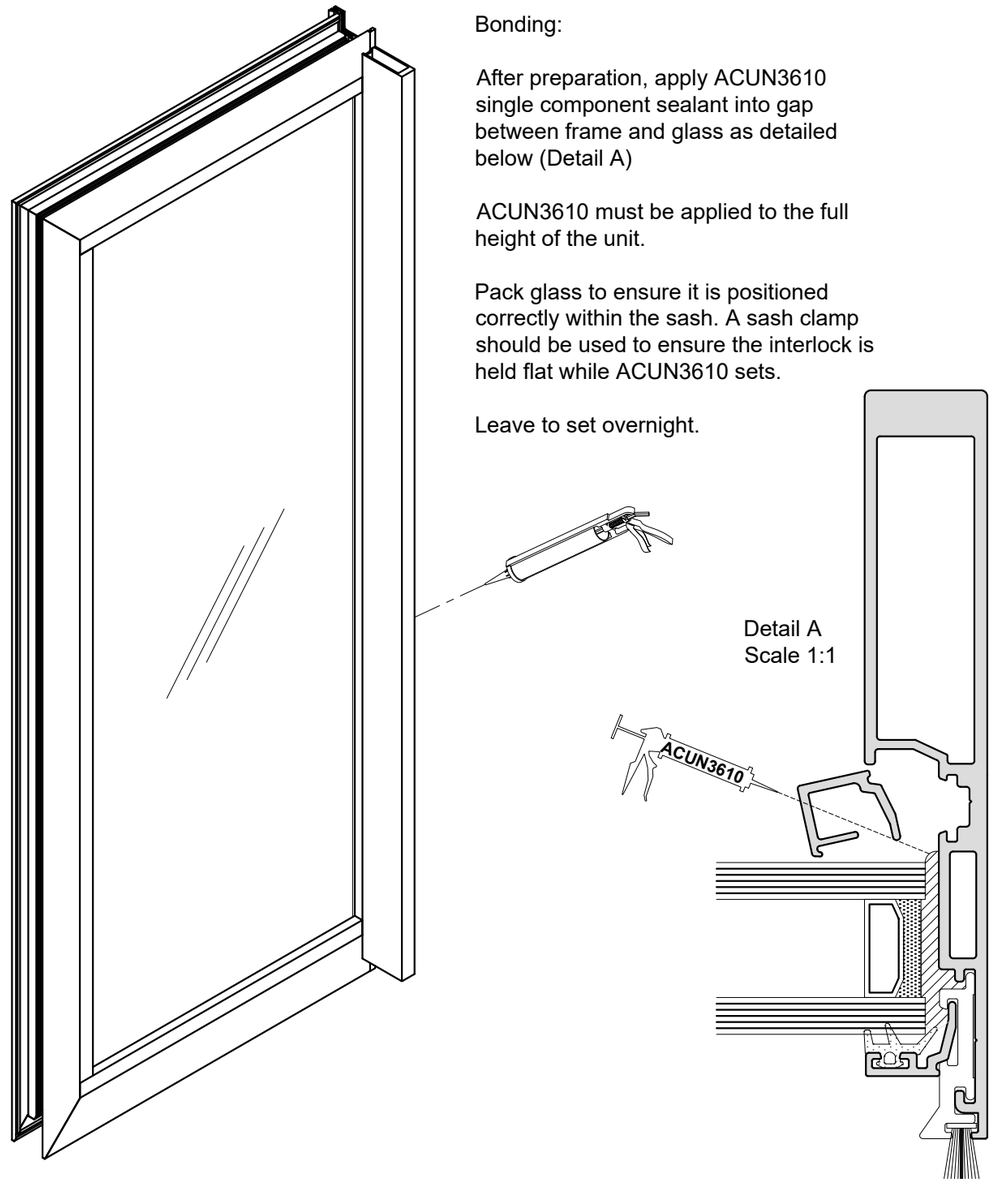

Bonding:

After preparation, apply ACUN3610 single component sealant into gap between frame and glass as detailed below (Detail A)

ACUN3610 must be applied to the full height of the unit.

Pack glass to ensure it is positioned correctly within the sash. A sash clamp should be used to ensure the interlock is held flat while ACUN3610 sets.

Leave to set overnight.

Detail A
Scale 1:1

Do Not Scale From This Drawing

VG540 Cutting & VG540/VG541 Fitting

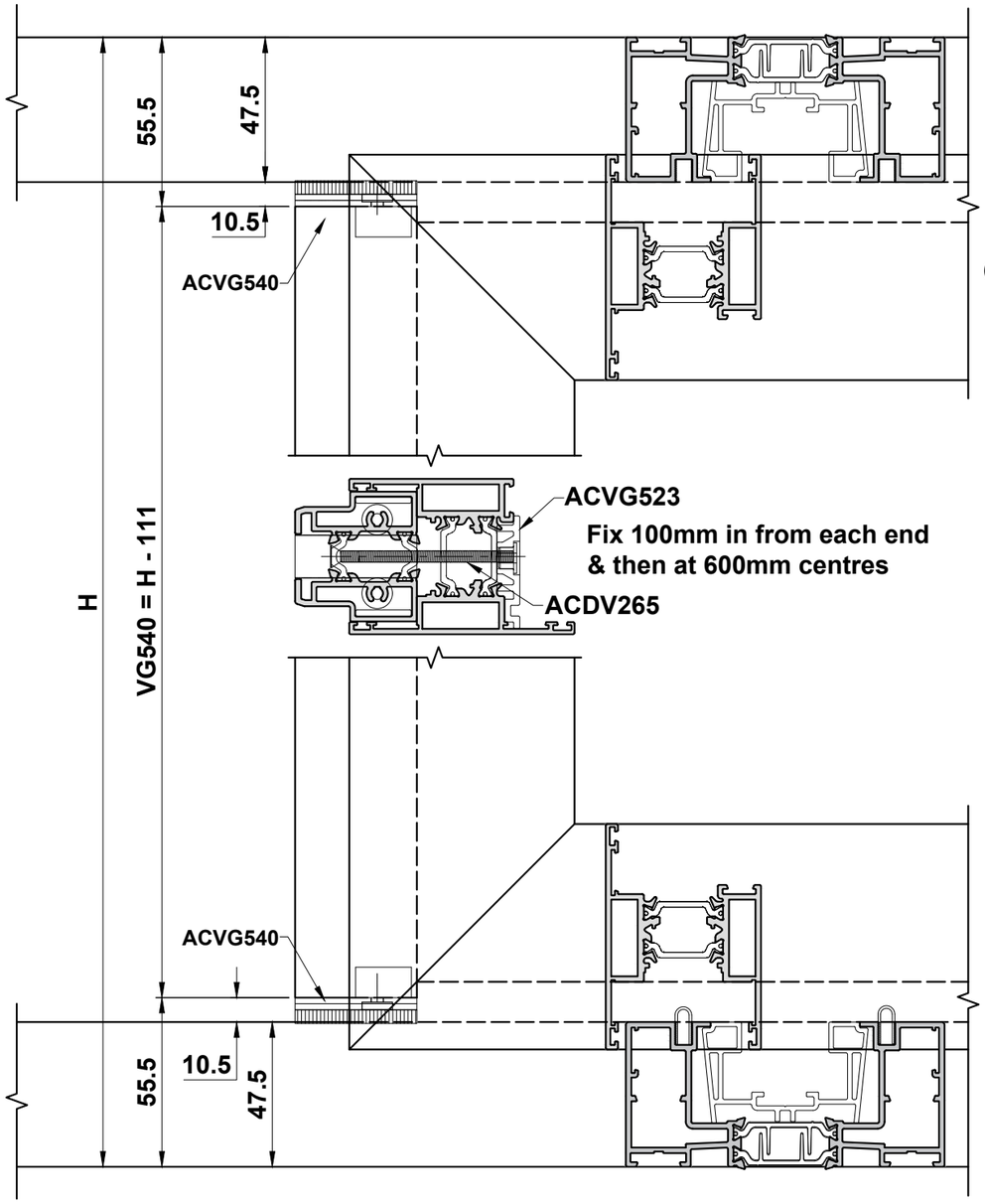

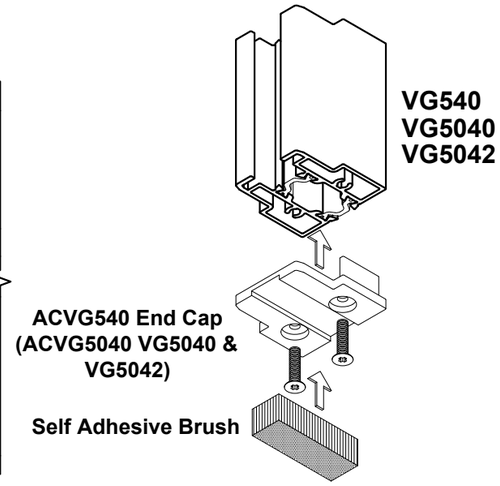

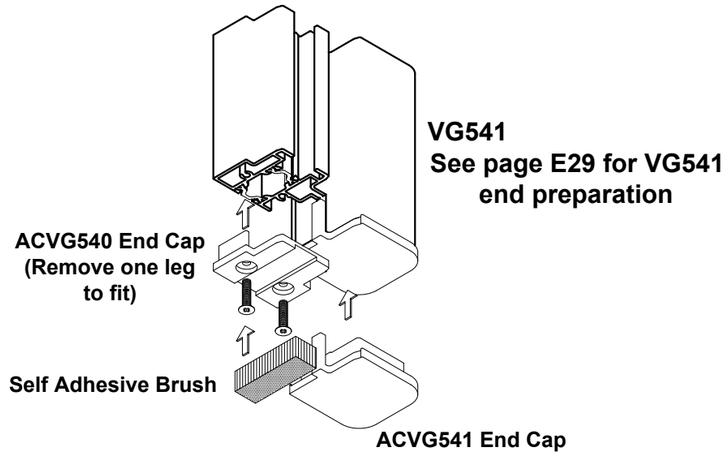

Note:
ACVG529 is not required on the locking side of the secondary door sash.
ACVG5046 must be used instead.

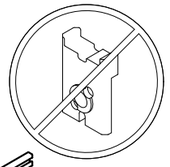

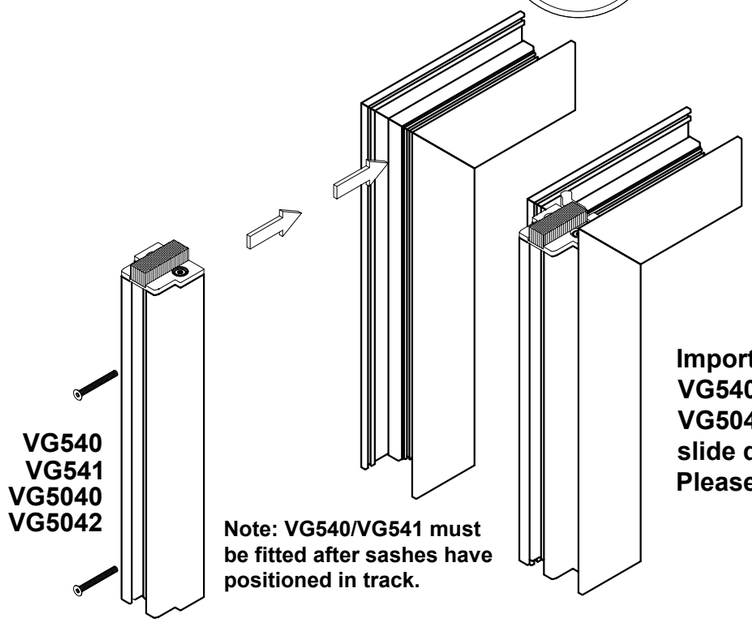

Note: VG540/VG541 must be fitted after sashes have positioned in track.

Important Note:
VG540, VG541, VG5040 & VG5042 are not suitable for lift & slide doors.
Please use VG542 instead.

Do Not Scale From This Drawing

VG541 Cutting & End Prep

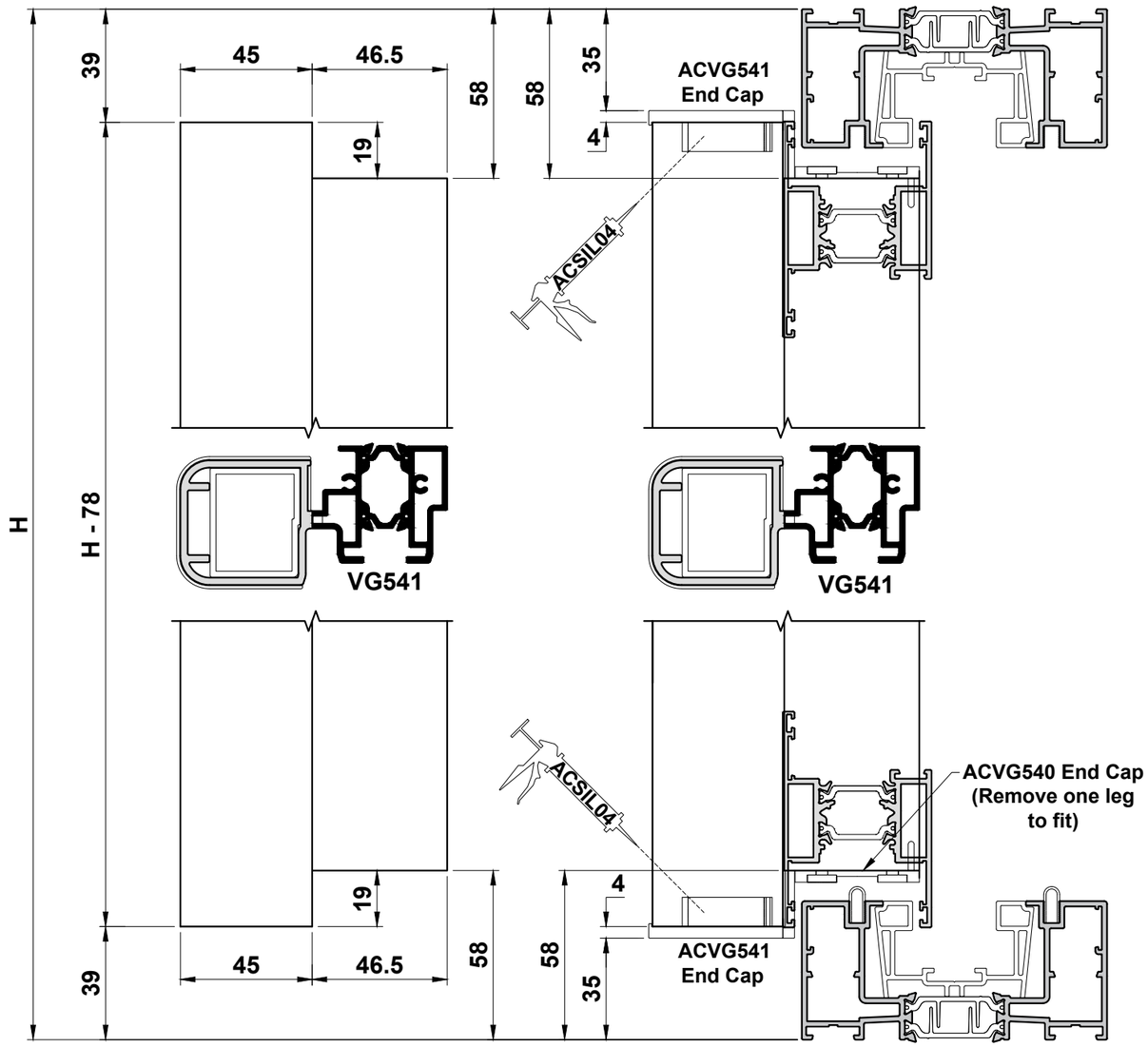

Detail where VG541 is on
outer track

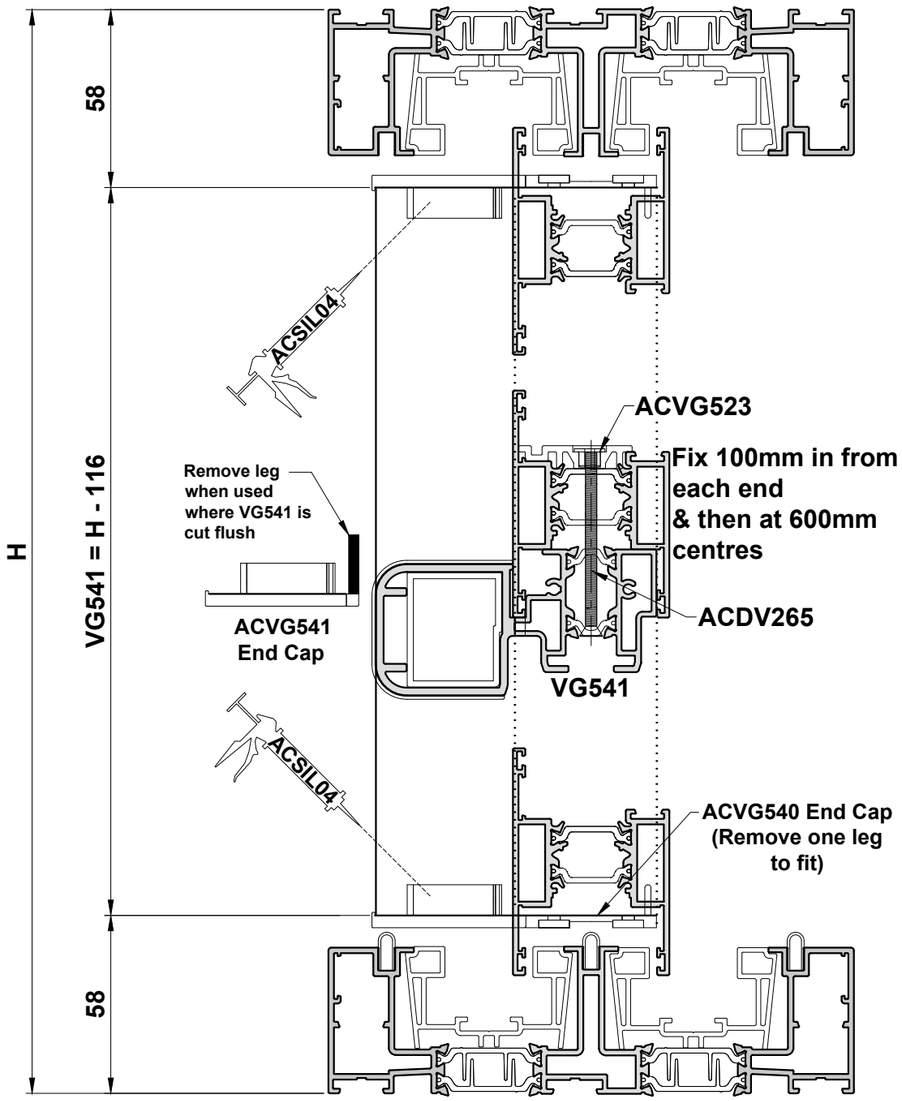

Do Not Scale From This Drawing

VG542 Fitting Details

ACVG543 End Caps

Slide without VG5014

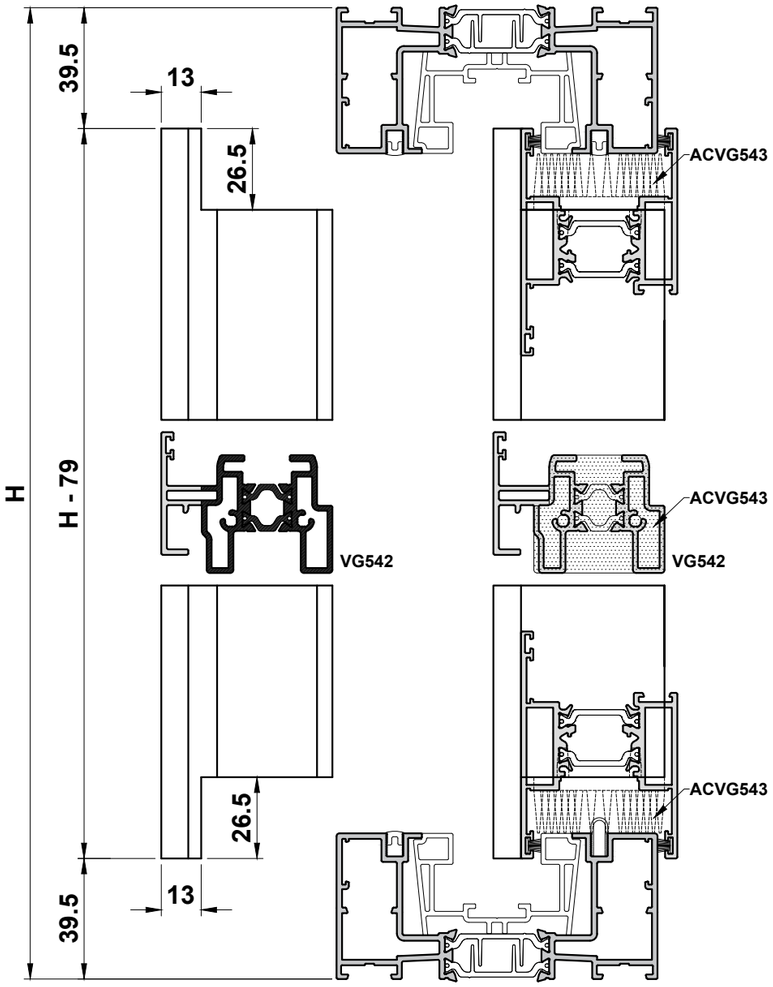

Slide with VG5014

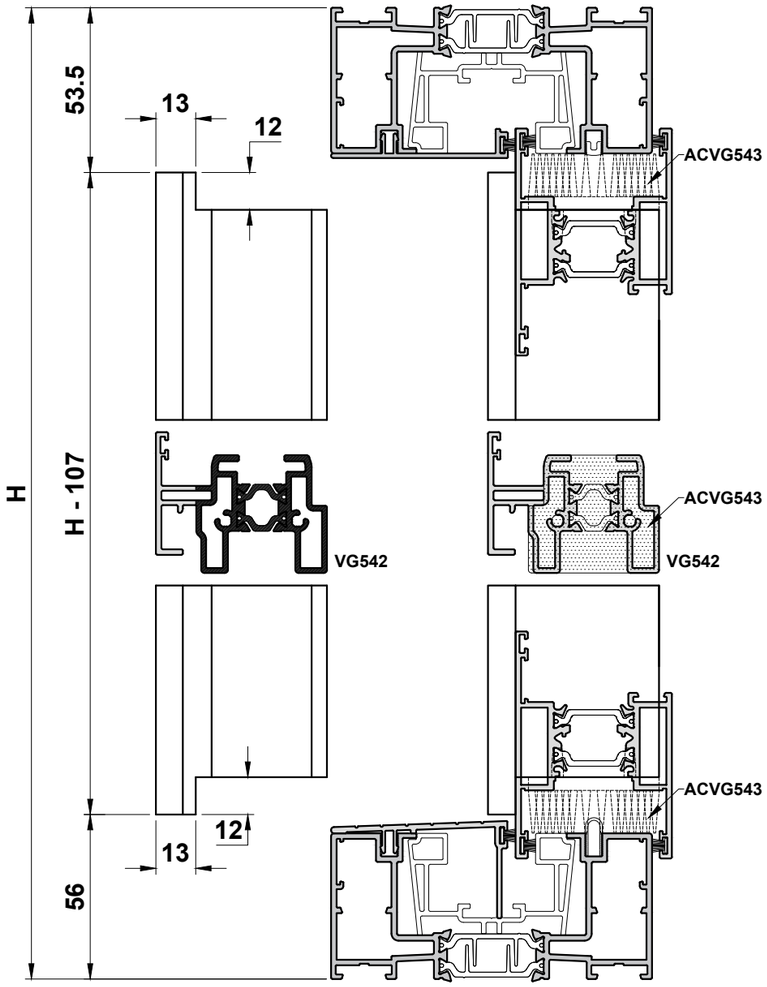

Lift & Slide with VG5014

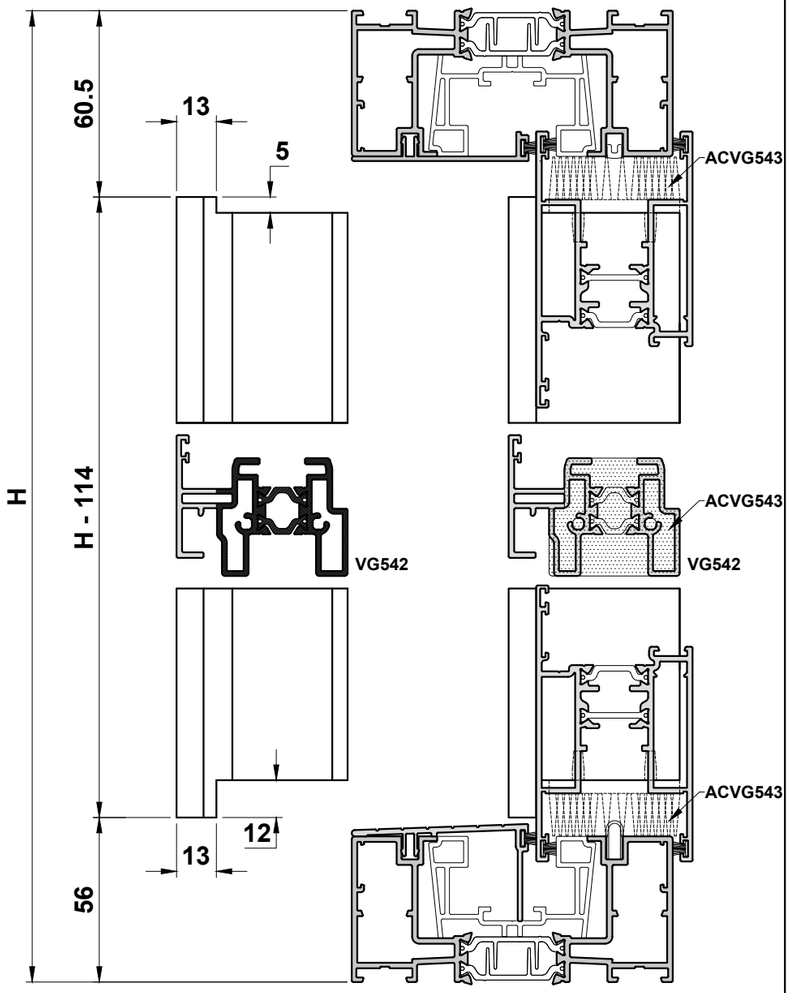

Do Not Scale From This Drawing

VG549 Fitting Details

Important Note:
Suitable for BT Lock only

Slide without VG5014

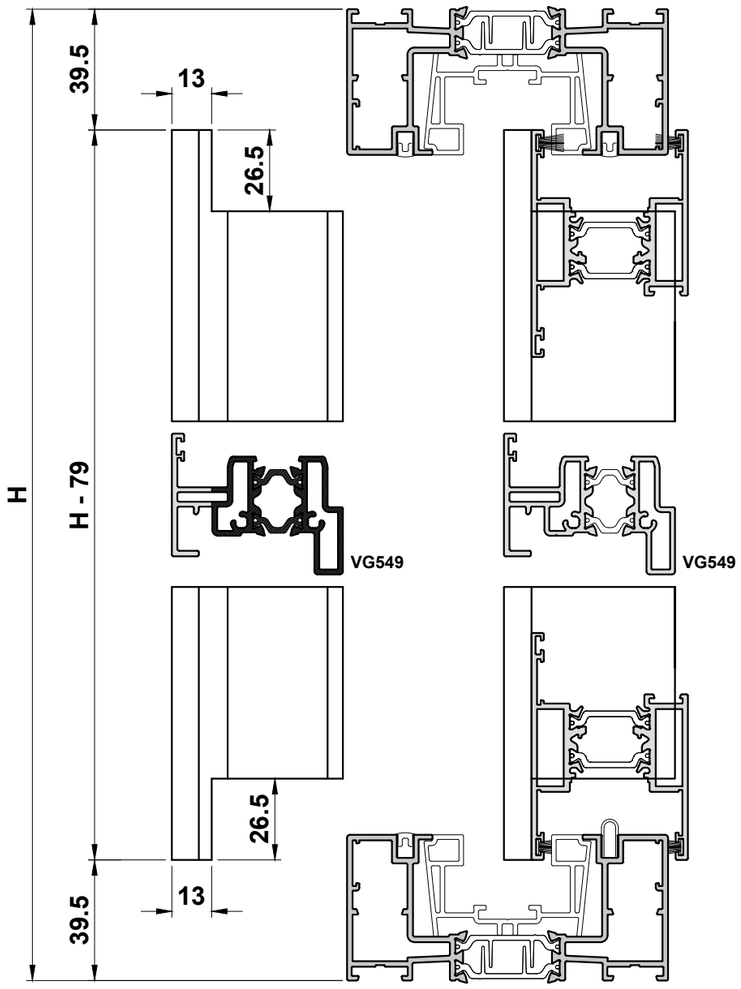

Slide with VG5014

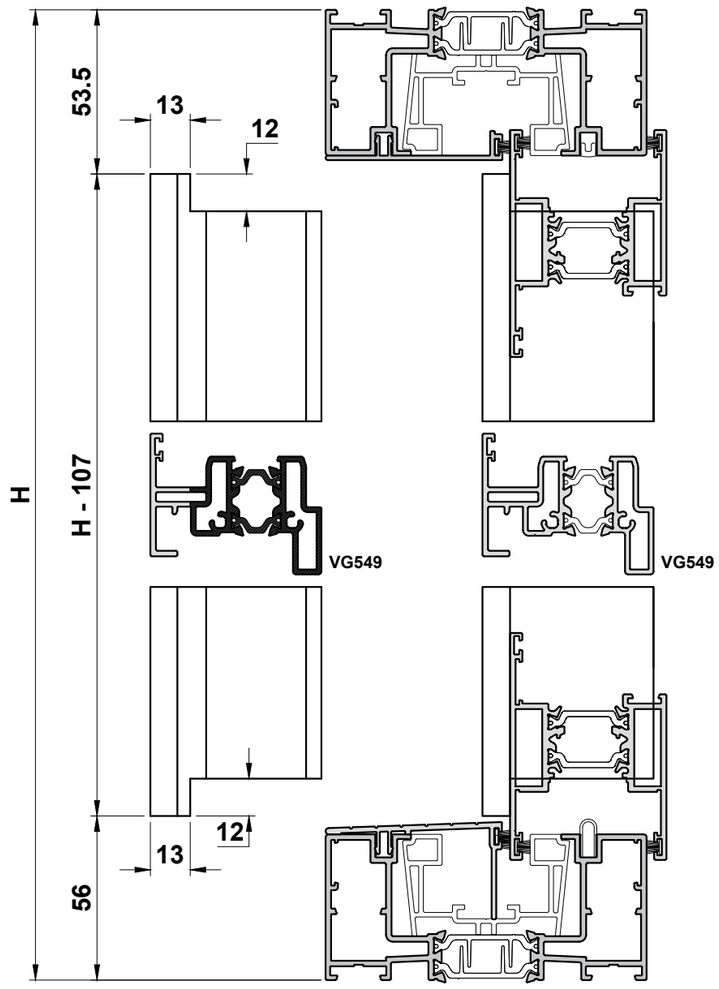

Slide with VG5015

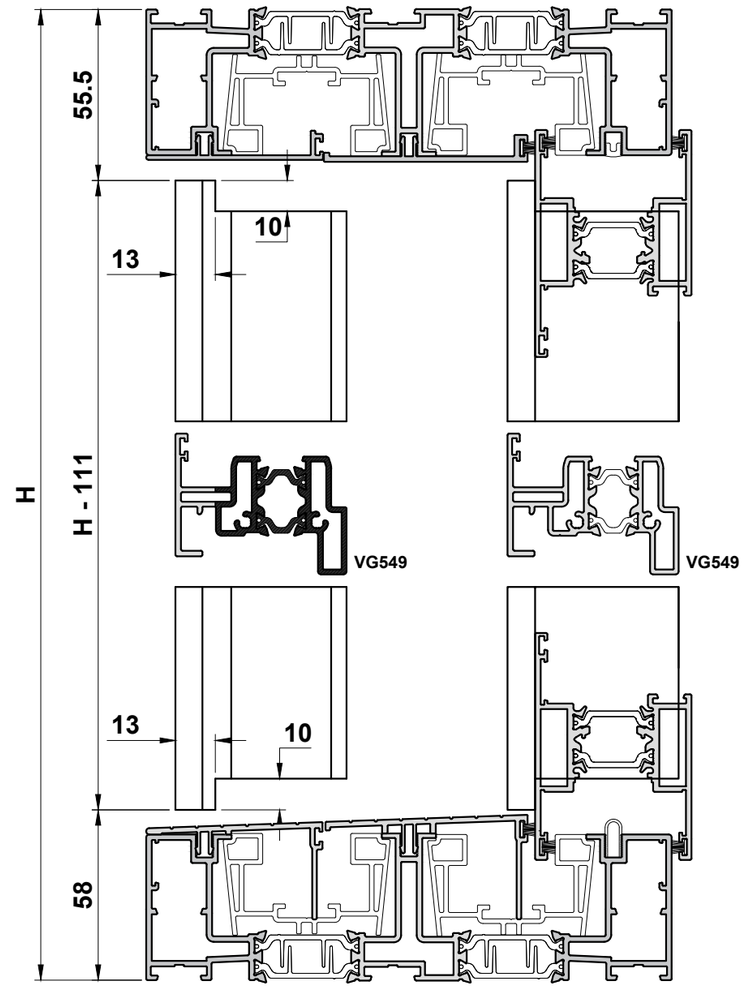

Do Not Scale From This Drawing

VG632 Fitting Details

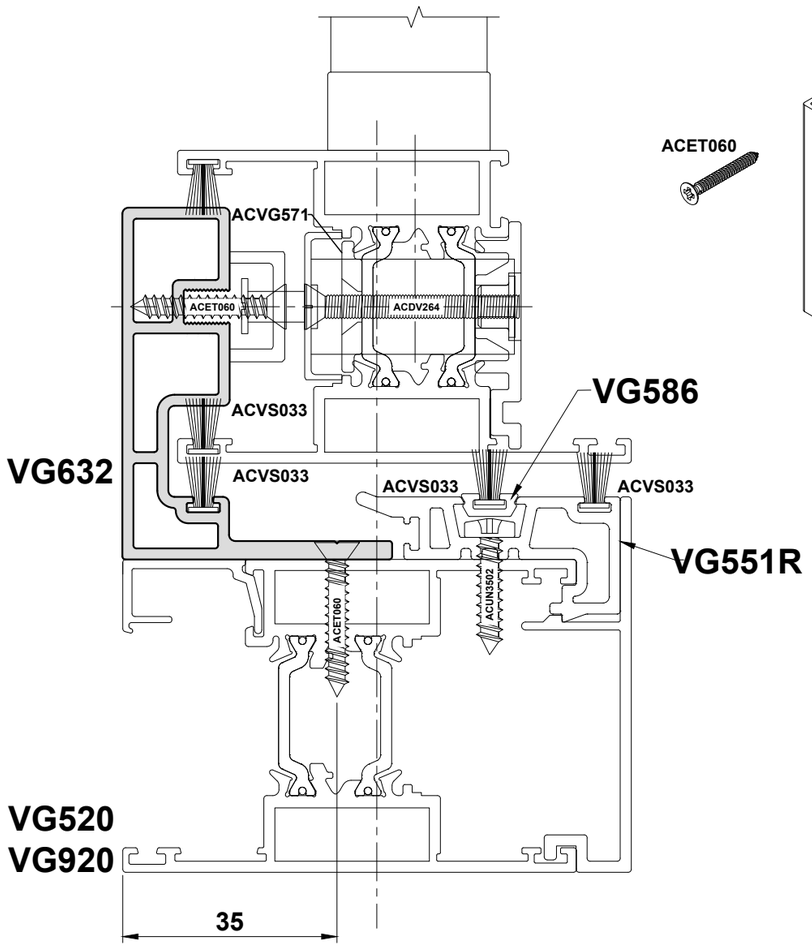

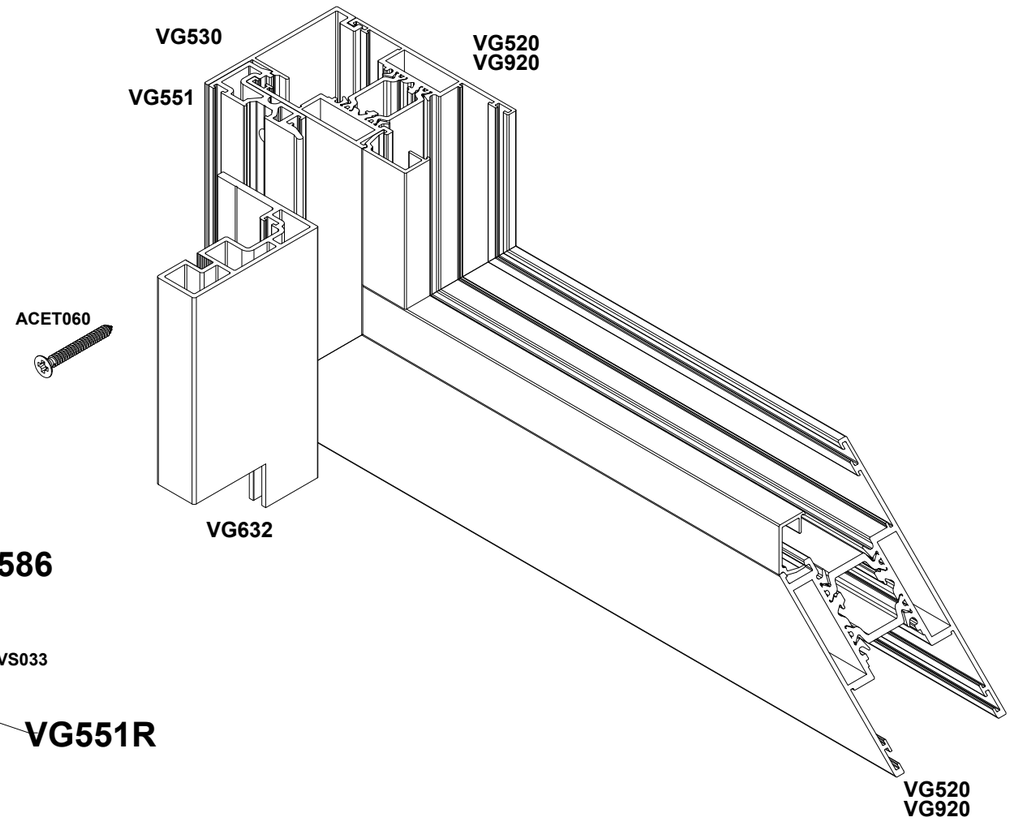

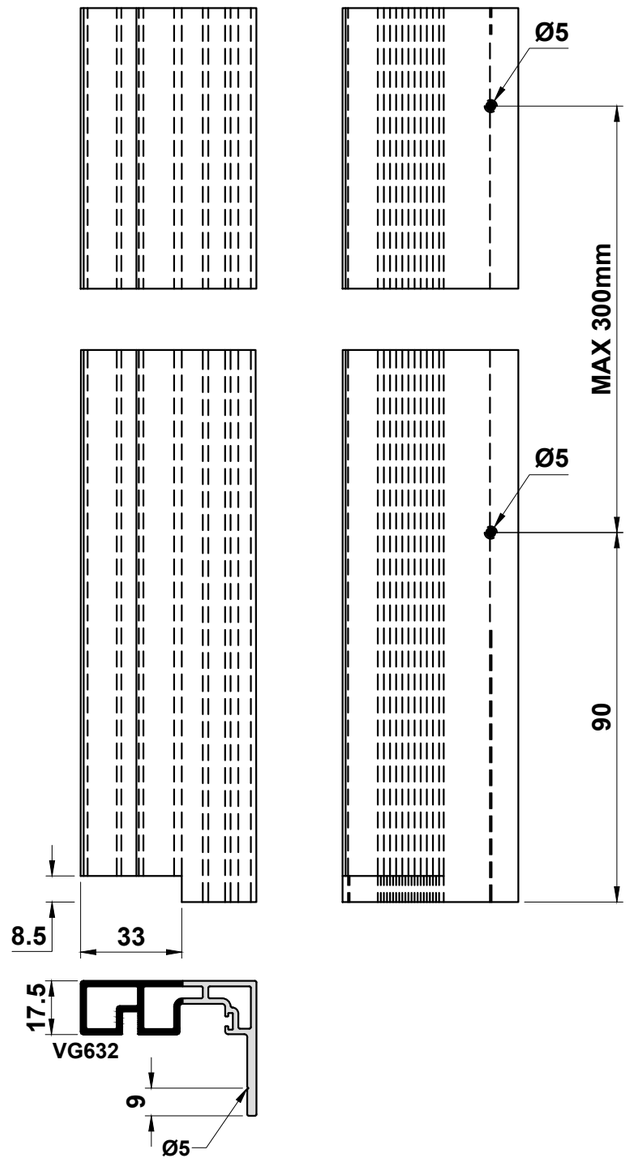

Do Not Scale From This Drawing

Sash Installation

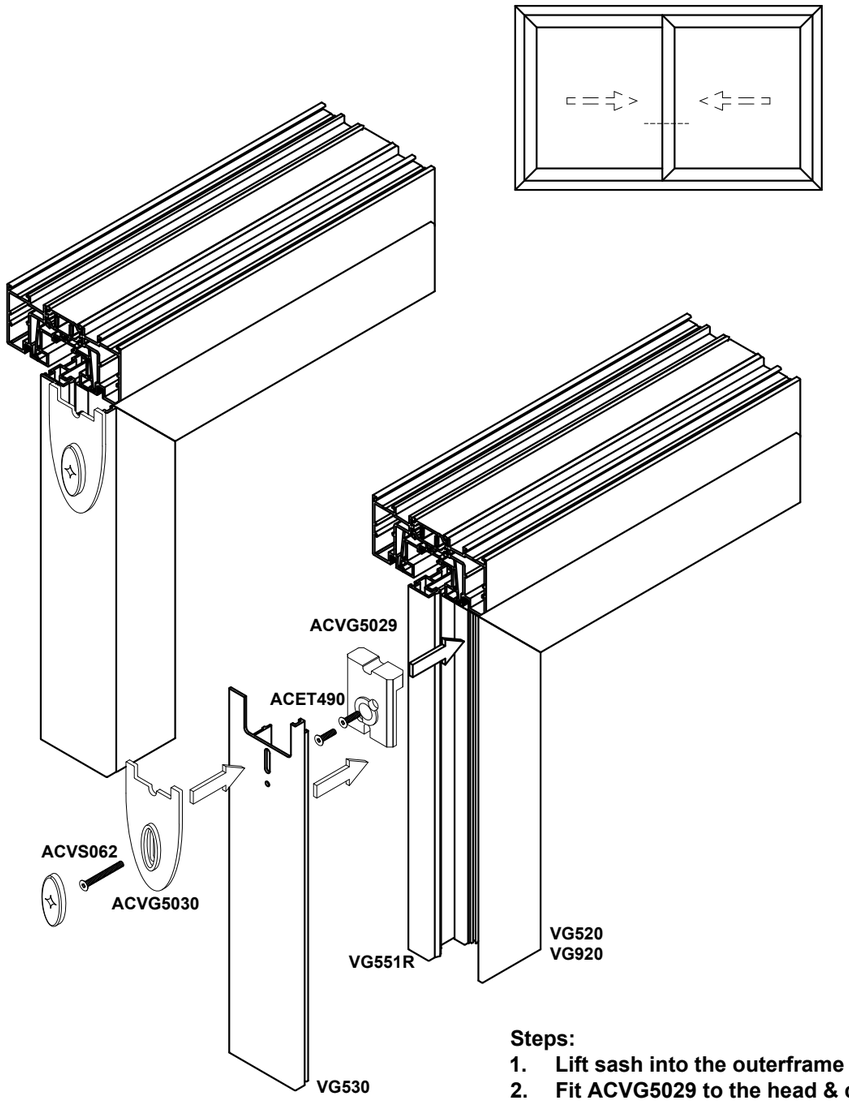

Steps:

1. Lift sash into the outerframe
2. Fit ACVG5029 to the head & cill using ACET490 screws
3. Clip VG530 into position
4. Fix ACVG5030 onto VG530 at head & cill using ACVS062 polyamide screw and clip on screw cover cap.

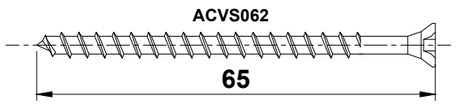

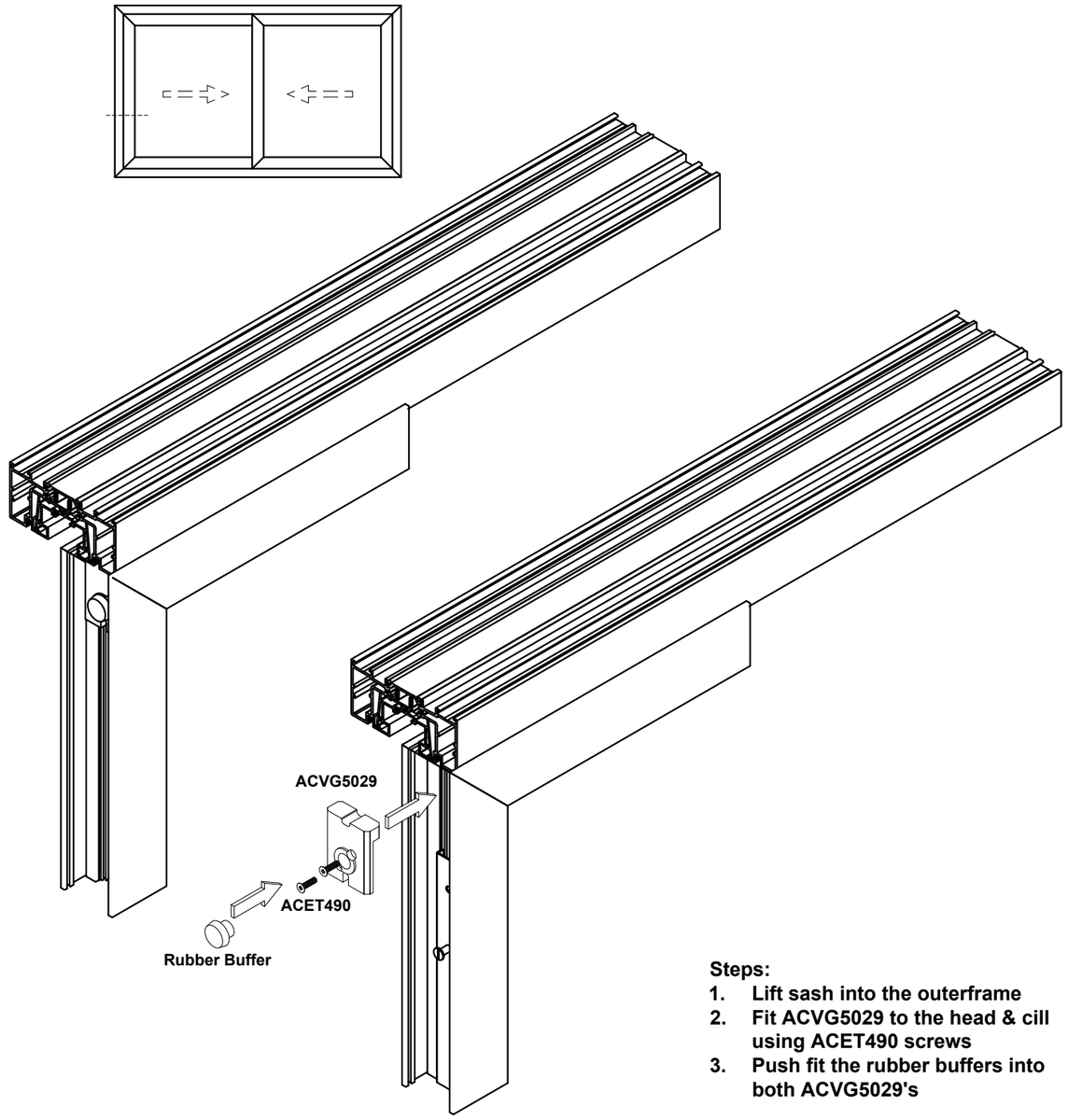

Steps:

1. Lift sash into the outerframe
2. Fit ACVG5029 to the head & cill using ACET490 screws
3. Push fit the rubber buffers into both ACVG5029's

Do Not Scale From This Drawing

Fixed Sash Installation

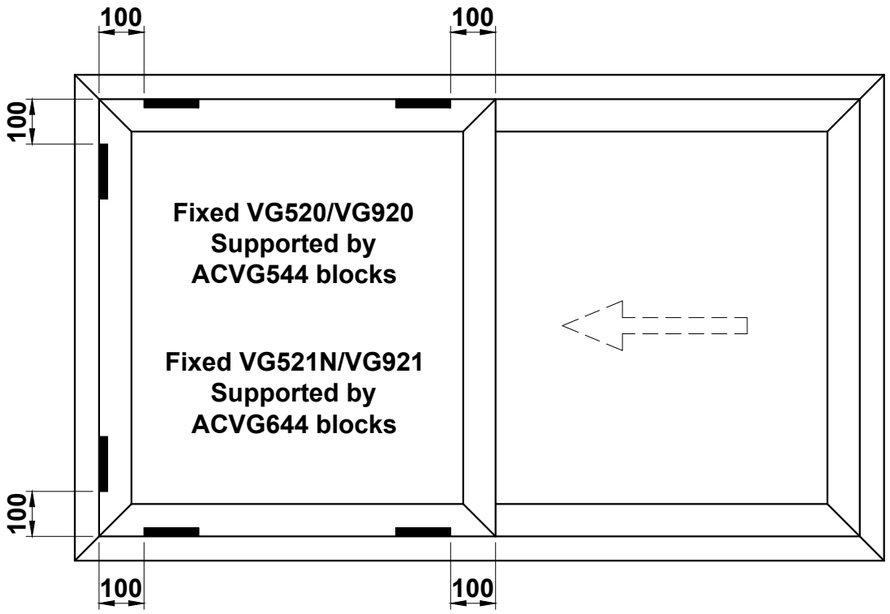

Please note that for improved weather performance the fixed pane should be positioned on the outer track so VG5014/VG5015 may be fitted.

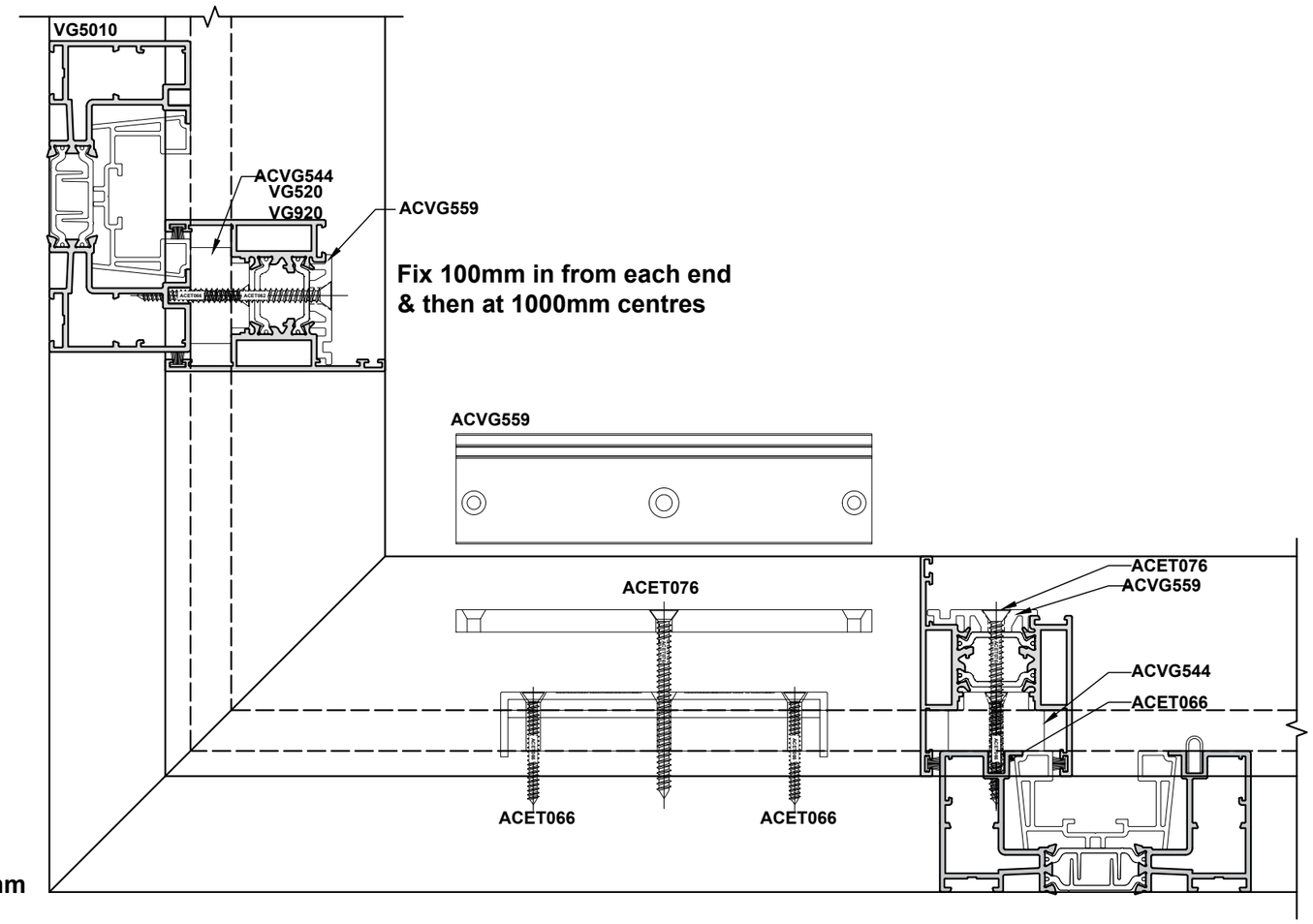

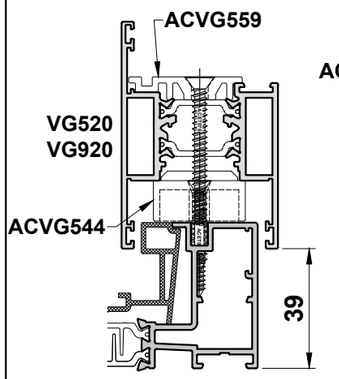

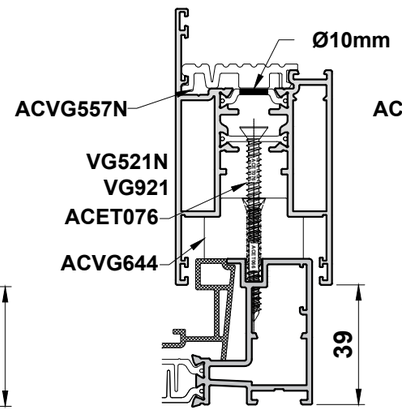

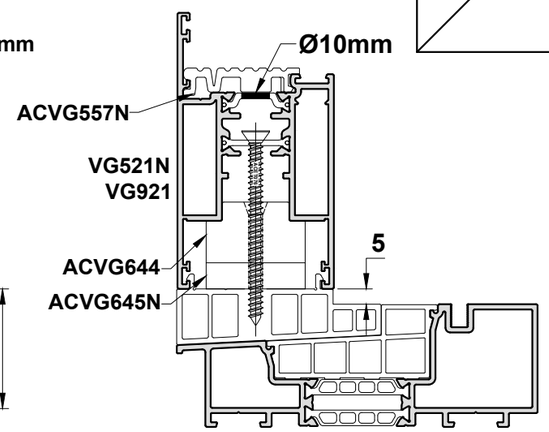

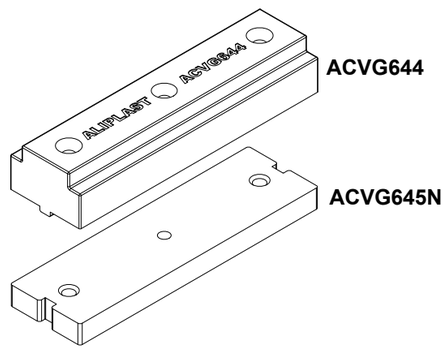

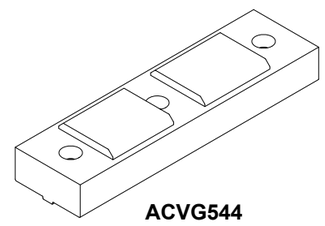

Do Not Scale From This Drawing

Interlock Plug Details

Interlock Plug Kit

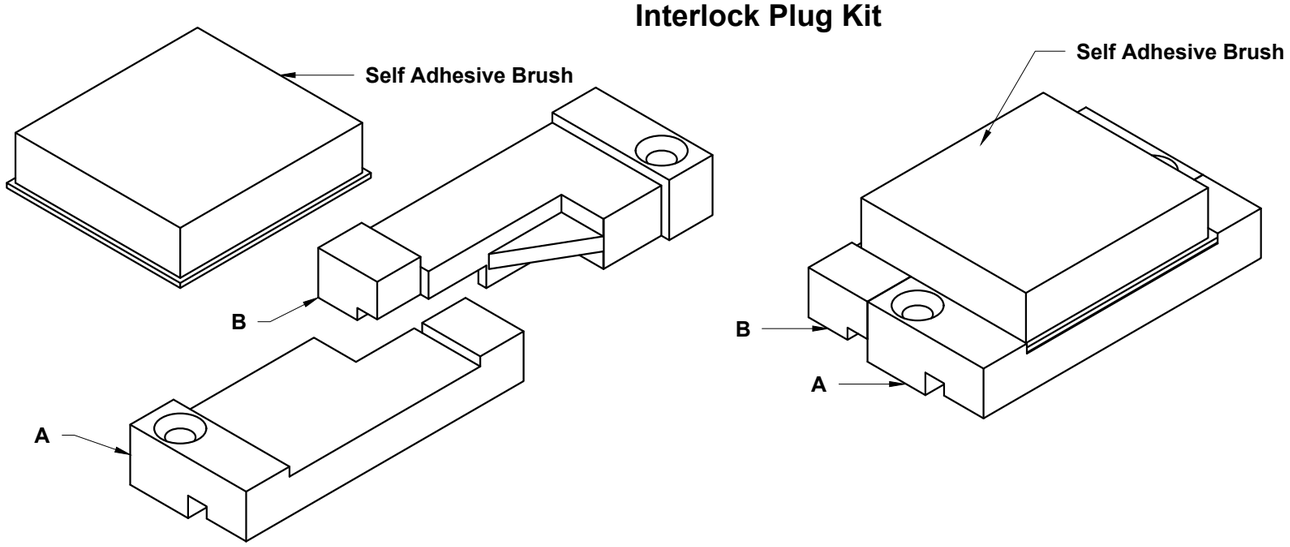

		Slide	Lift & Slide	Interlock Plug
Interlock	Standard Interlock	Y	Y	ACVG5034
	35mm Interlock	Y	Y	ACVG5032
	20mm Interlock	Y		ACVG5032

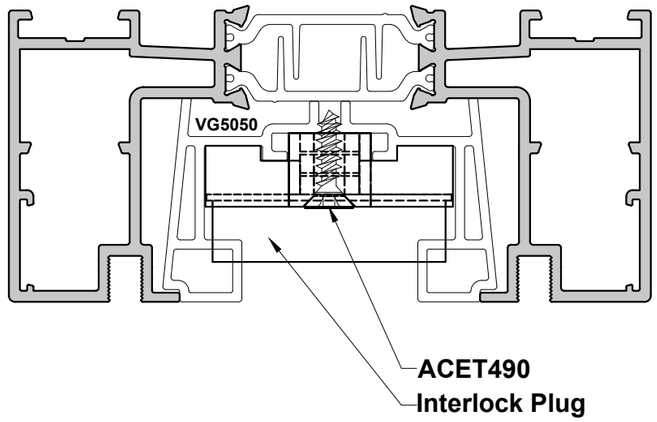

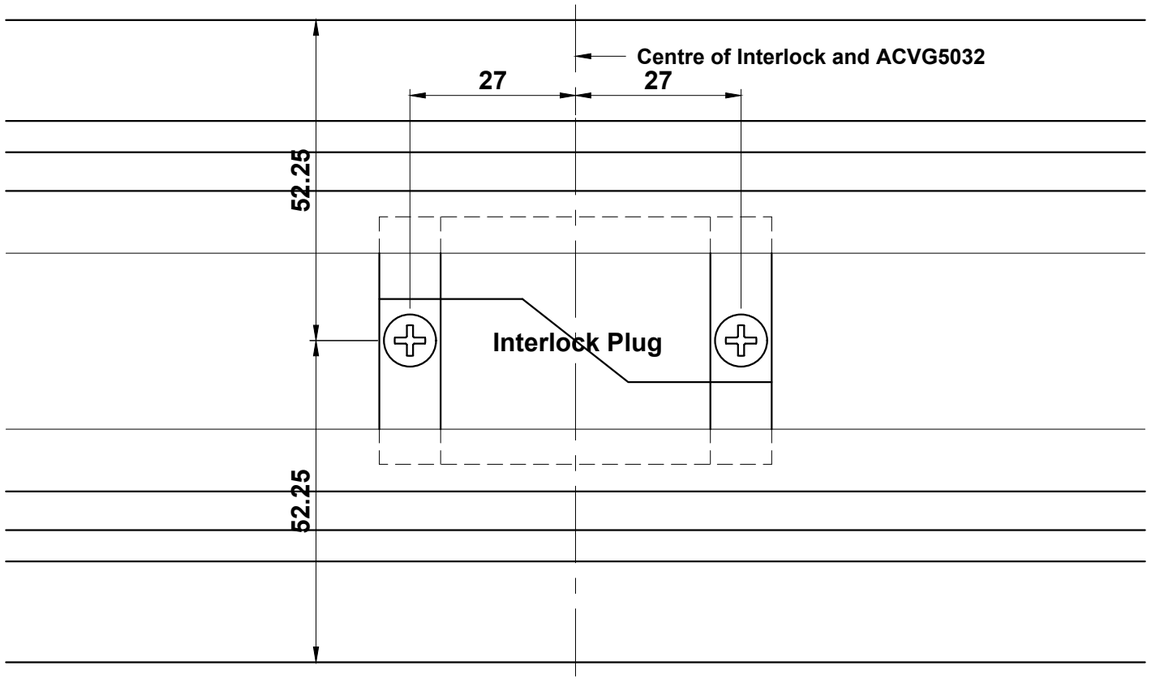

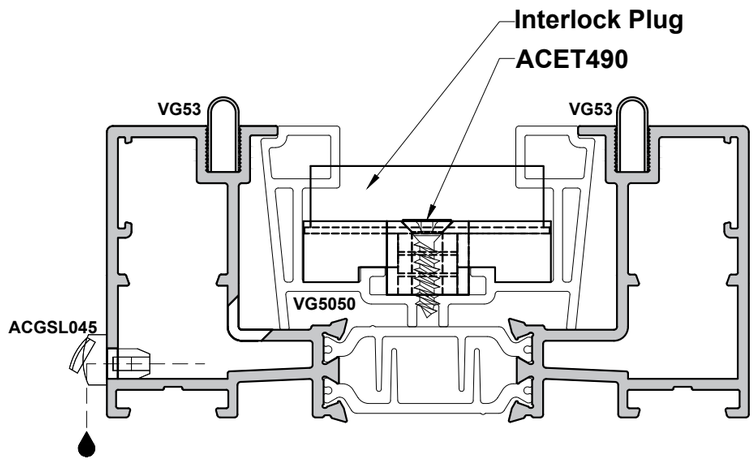

Do Not Scale From This Drawing

Interlock Plug Fitting Detail

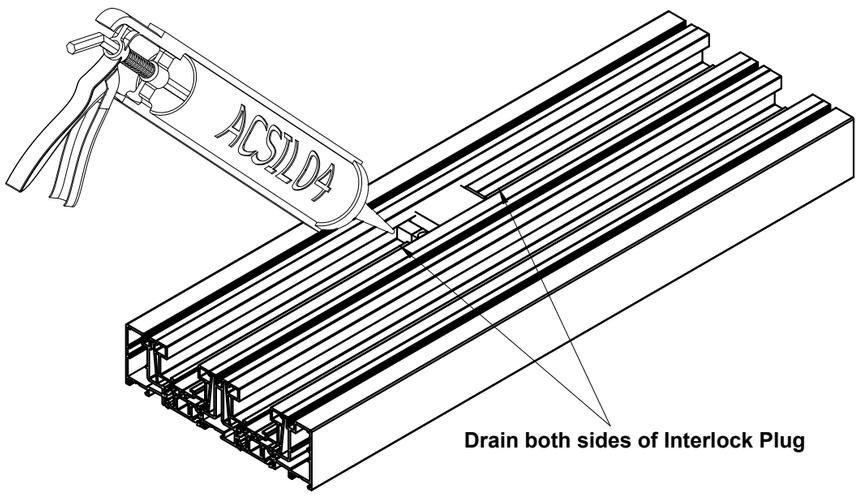

Interlock Plug is positioned in VG5050 above and below the interlock. Seal bottom Plug with ACSIL04 before fixing.

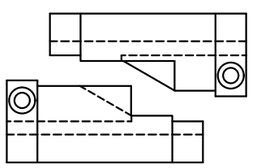

Interlock Plug

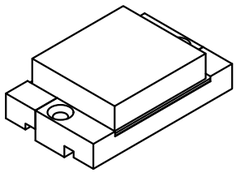

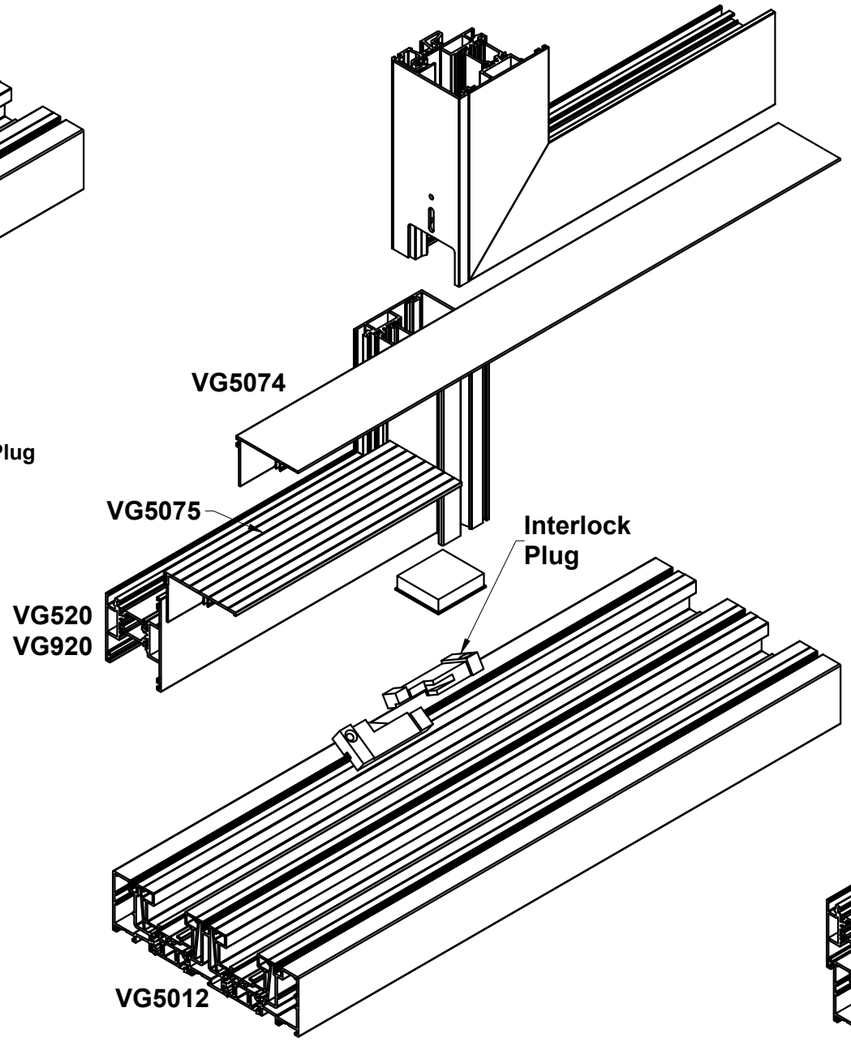

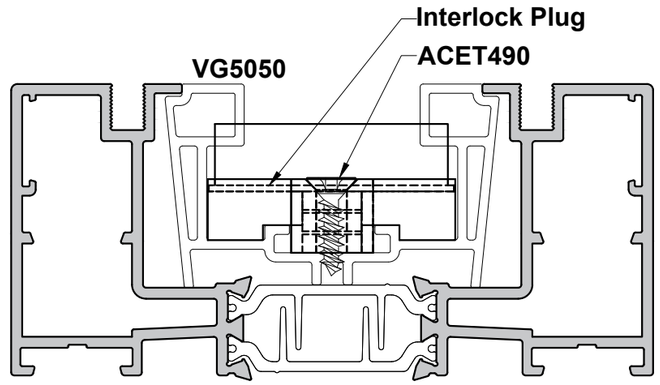

VG5008
VG5010
VG5011
VG5012
VG5013

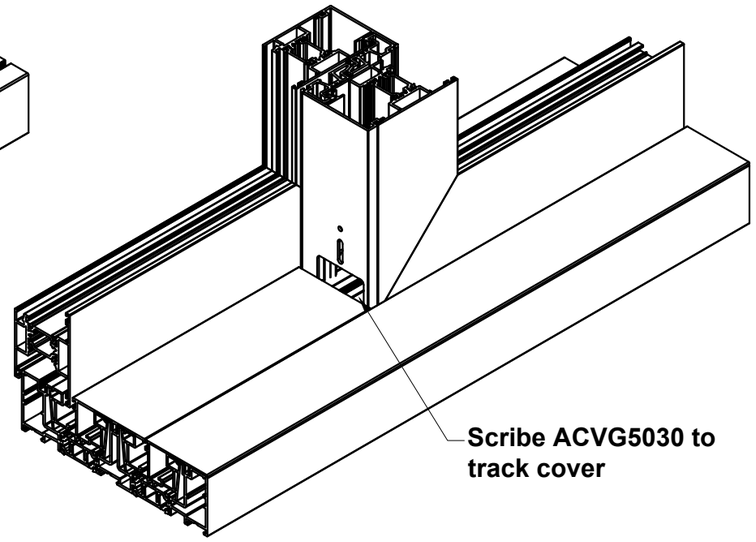

Do Not Scale From This Drawing

Interlock Detail HYB

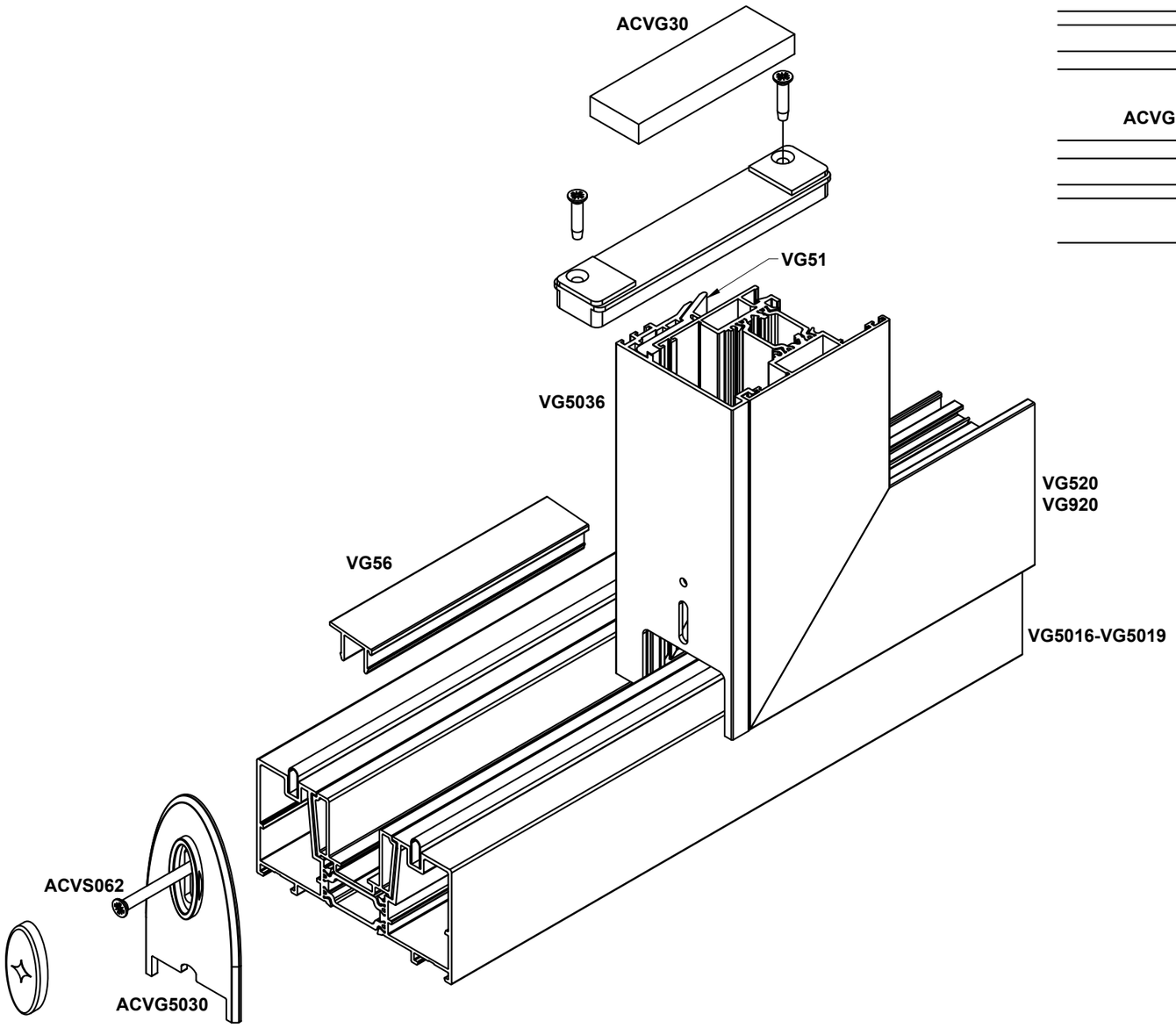

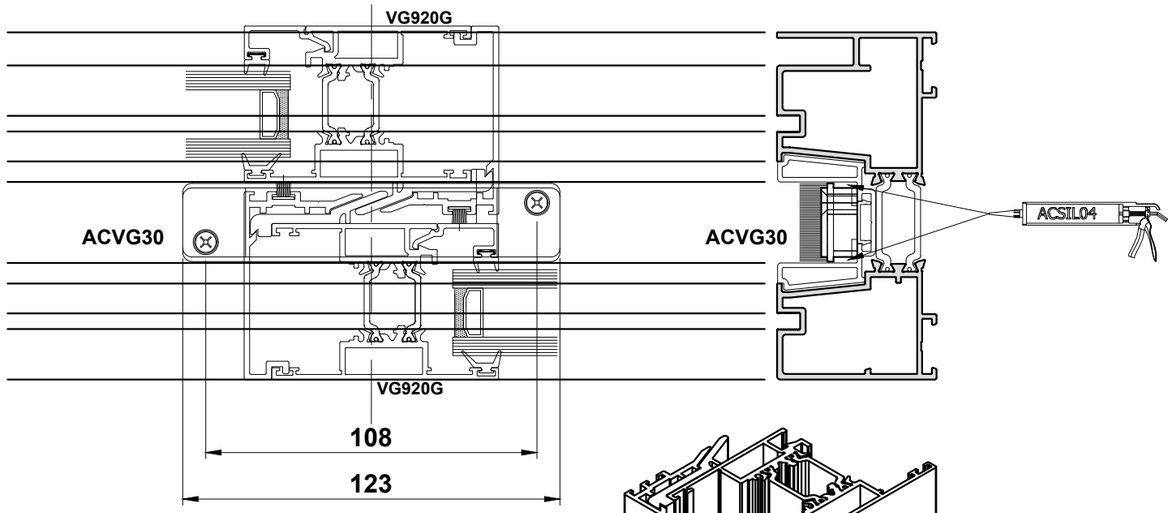

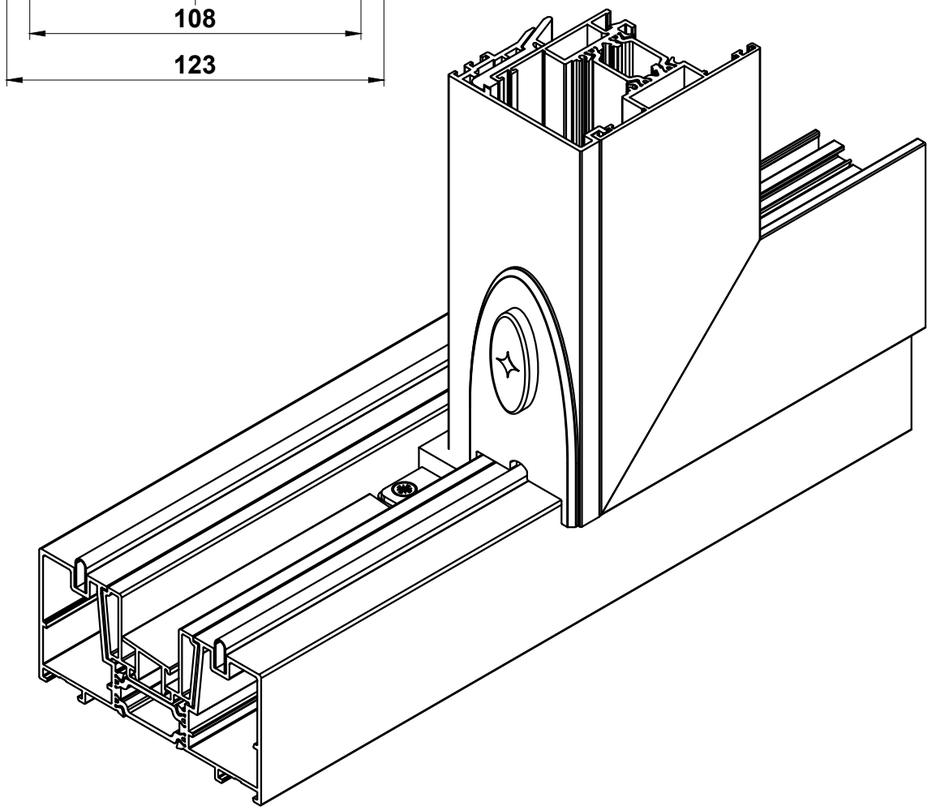

Do Not Scale From This Drawing

Lift & Slide Door Hardware Selection

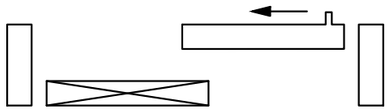

SCHEME A - 2 RAIL-1F-20

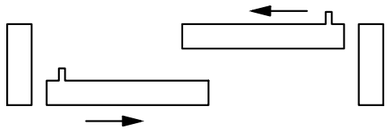

SCHEME B - 2 RAIL-10-20

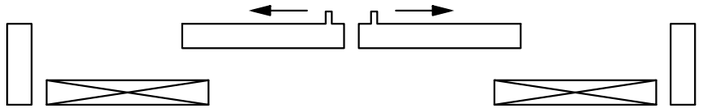

SCHEME C - 2 RAIL-1F-20X20-1F

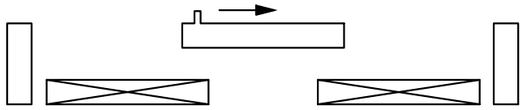

SCHEME D - 2 RAIL-1F-20-1F

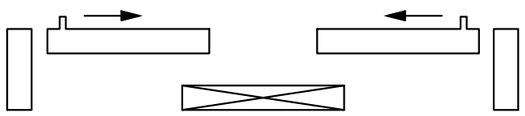

SCHEME E - 2 RAIL-20-1F-20

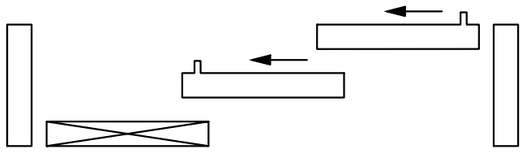

SCHEME F - 3 RAIL-1F-20-30

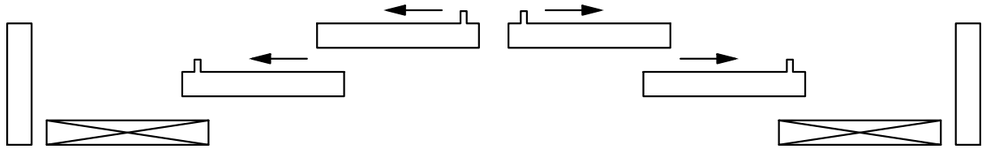

SCHEME G - 2 RAIL-1F-20-30X30-20-1F

QUANTITY							DESCRIPTION		PART NUMBER
A	B	C	D	E	F	G			
1	2	2	1	2	2	4	DRIVE GEAR		
								VENT HEIGHT	
								1718mm - 2218mm	ACVG277
								2118mm - 2518mm	ACVG278
								2418mm ...	ACVG279
1	2	2	1	2	2	4	STANDARD: 4-POINT LOCK MAX:270 KG		ACVG5285
1	2	2	1	2	2	4	CONNECTING ROD		
								WIDTH SASH	
								700mm - 1250mm	ACVG269
								1200mm - 1750mm	ACVG270
								1700mm - 2250mm	ACVG271
								2200mm - 2750mm	ACVG272
								2700mm - 3200mm	ACVG273
(*)	(*)	1	(*)	(*)	(*)	1	LOCKING POINT (BOTTOM)		ACVG281N
1	2	2	1	2	2	4	GUIDE BRACKET		ACVG268
		1				1	BASIC SET LIFT & SLIDING DOOR 4 DOOR		ACVG240

Do Not Scale From This Drawing

Lift & Slide Door with Standard Track

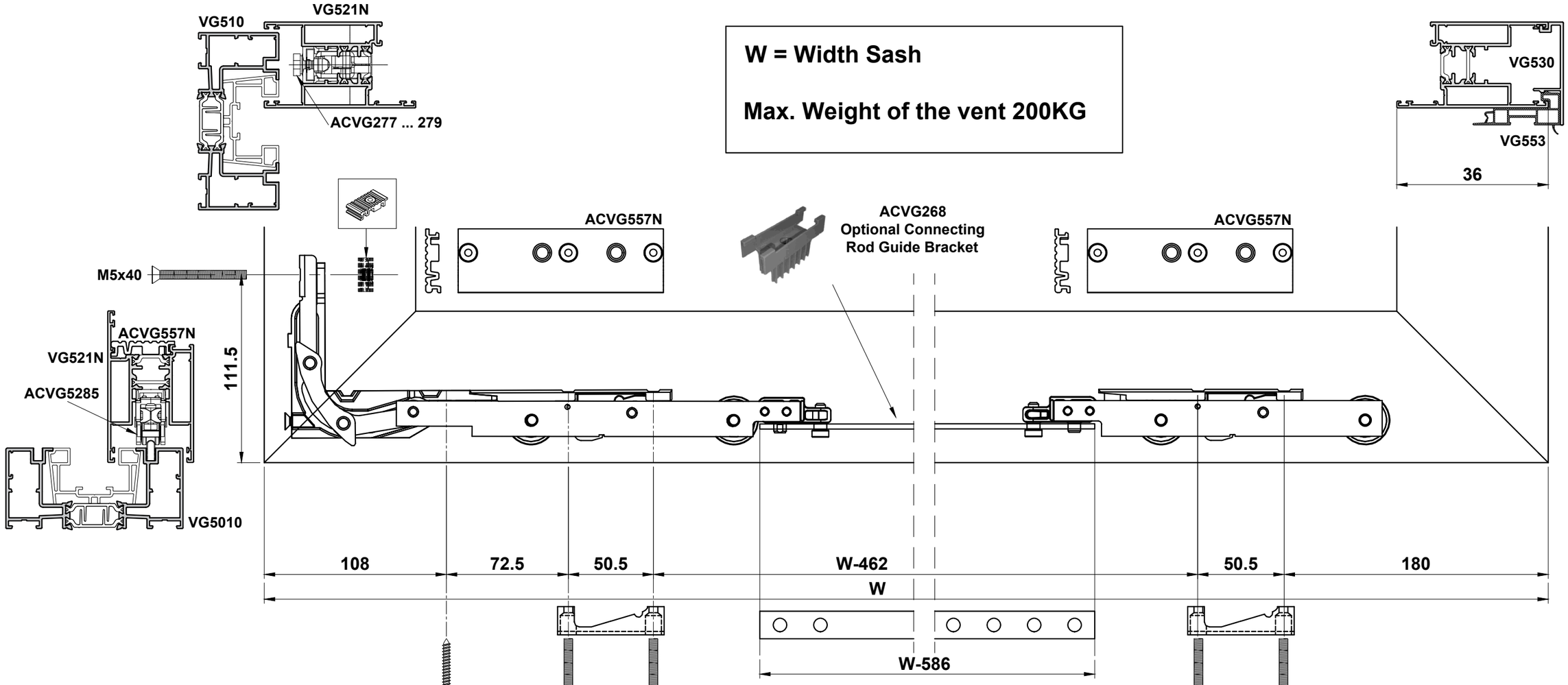

702mm < W < 1278mm	ACVG269
1206mm < W < 1782mm	ACVG270
1710mm < W < 2286mm	ACVG271
2214mm < W < 2790mm	ACVG272
2718mm < W < 3294mm	ACVG273

Note:
Screws are supplied
with ACVG5285 kit

Do Not Scale From This Drawing

Lift & Slide Bottom Locking Point (ACVG281N) Fixing Detail

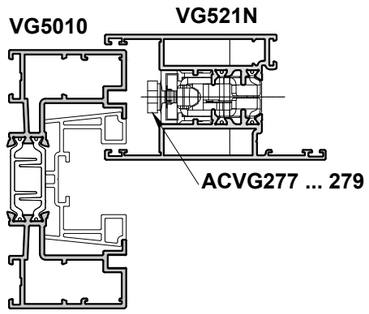

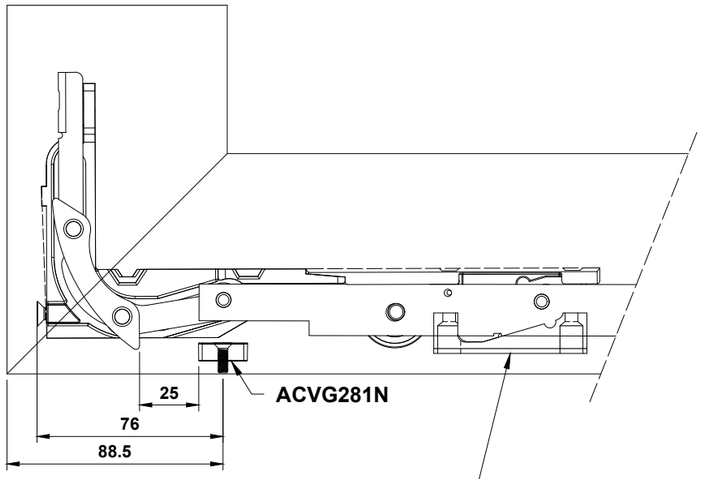

⚠ Support Pieces from ACDV280N kit are required for ACVG281N to work correctly.

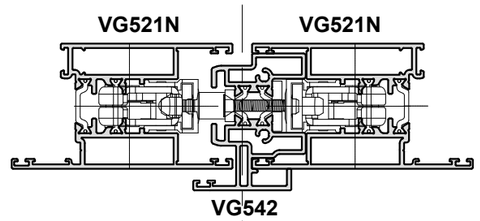

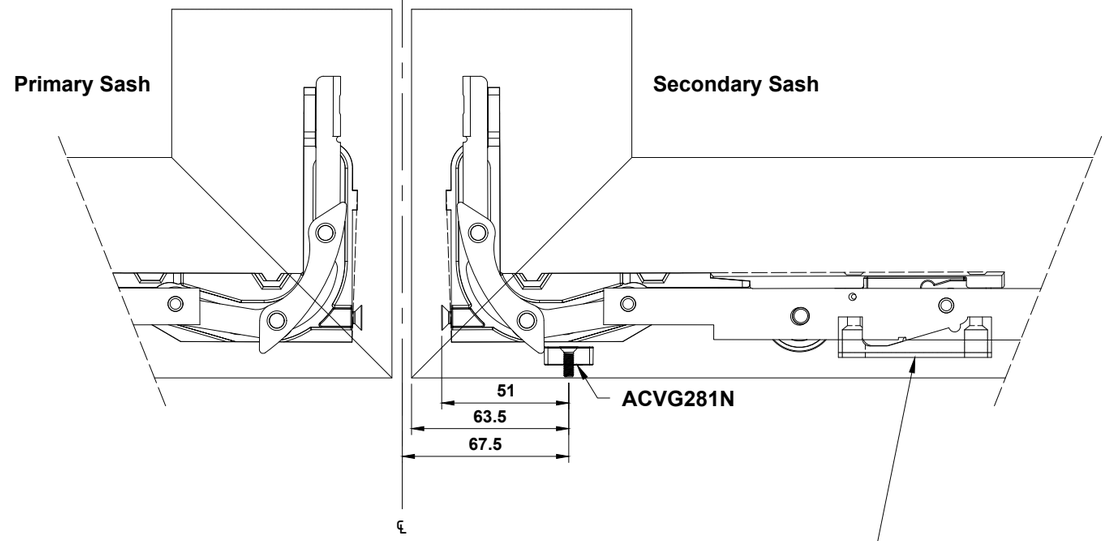

⚠ Support Pieces from ACDV280N kit are required for ACVG281N to work correctly.

Do Not Scale From This Drawing

Lift & Slide Single Door Locking Details

ext.	int.			2x
ACSZ860	ACSZ861	ACMX1138		ACET235
	ACSZ863		ACMX01603	
ACSZ862	ACSZ861		ACMX01603	
	ACSZ863		ACCY4040NKS1	
ACSZ871	ACSZ861	ACMX1070		
	ACSZ863		ACMX01603	
			ACMX3040	
ACSZ871 + ACSZ400	ACSZ863		ACCY4050NK	

Vent Height		X (mm)	Y (mm)
1718 mm - 2218 mm	ACVG277	204.5	314.5
2118 mm - 2518 mm	ACVG278	604.5	714.5
2418 mm - ...	ACVG279	1004.5	1114.5

With Cylinder
Without Cylinder

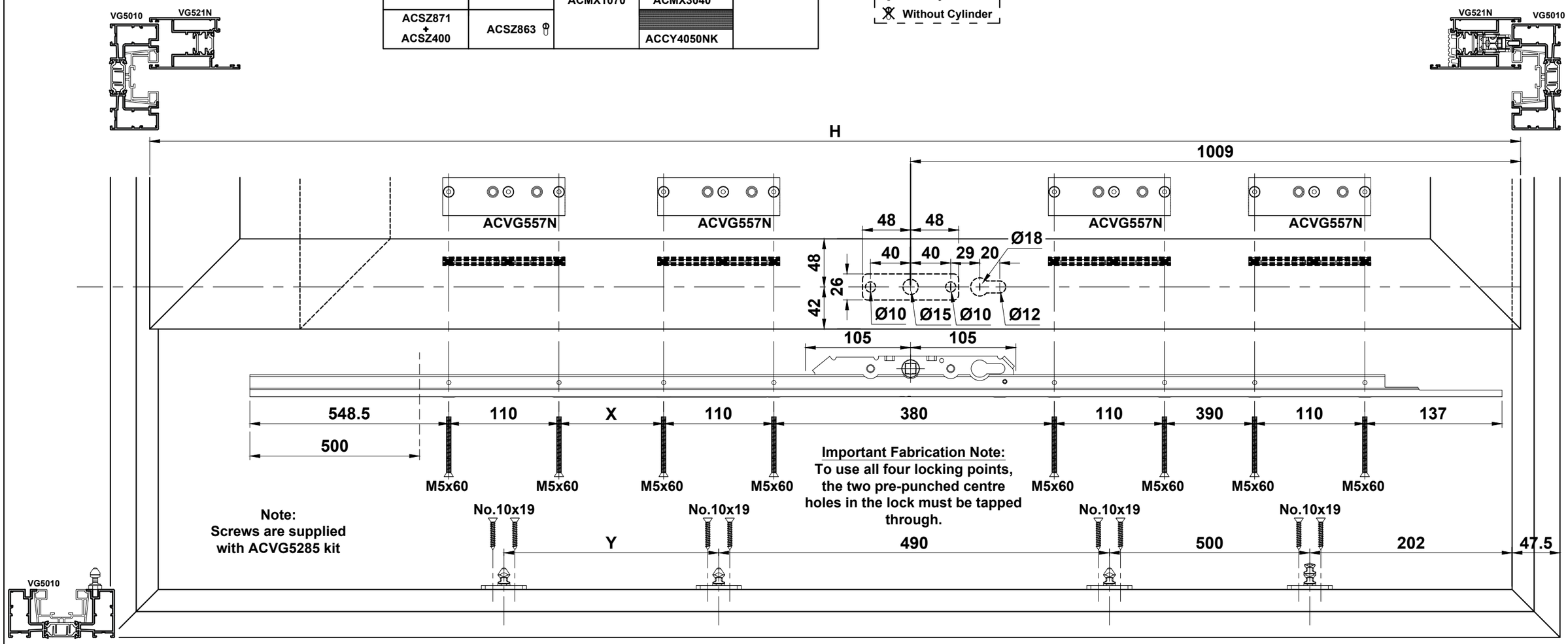

Important Fabrication Note:
To use all four locking points, the two pre-punched centre holes in the lock must be tapped through.

Note:
Screws are supplied with ACVG5285 kit

Do Not Scale From This Drawing

Lift & Slide Double Door Lock Details

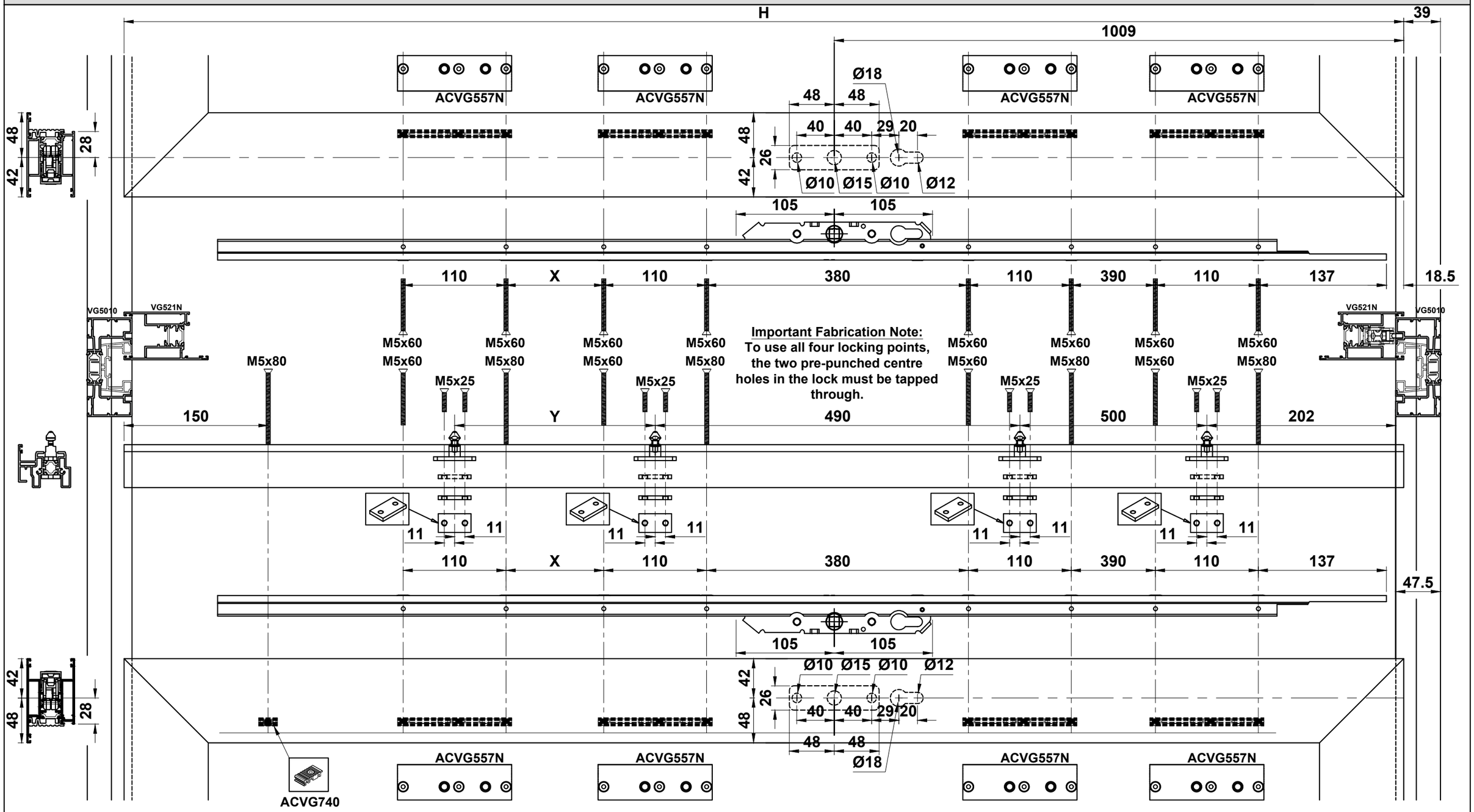

Do Not Scale From This Drawing

High Security Lift & Slide Door Layout

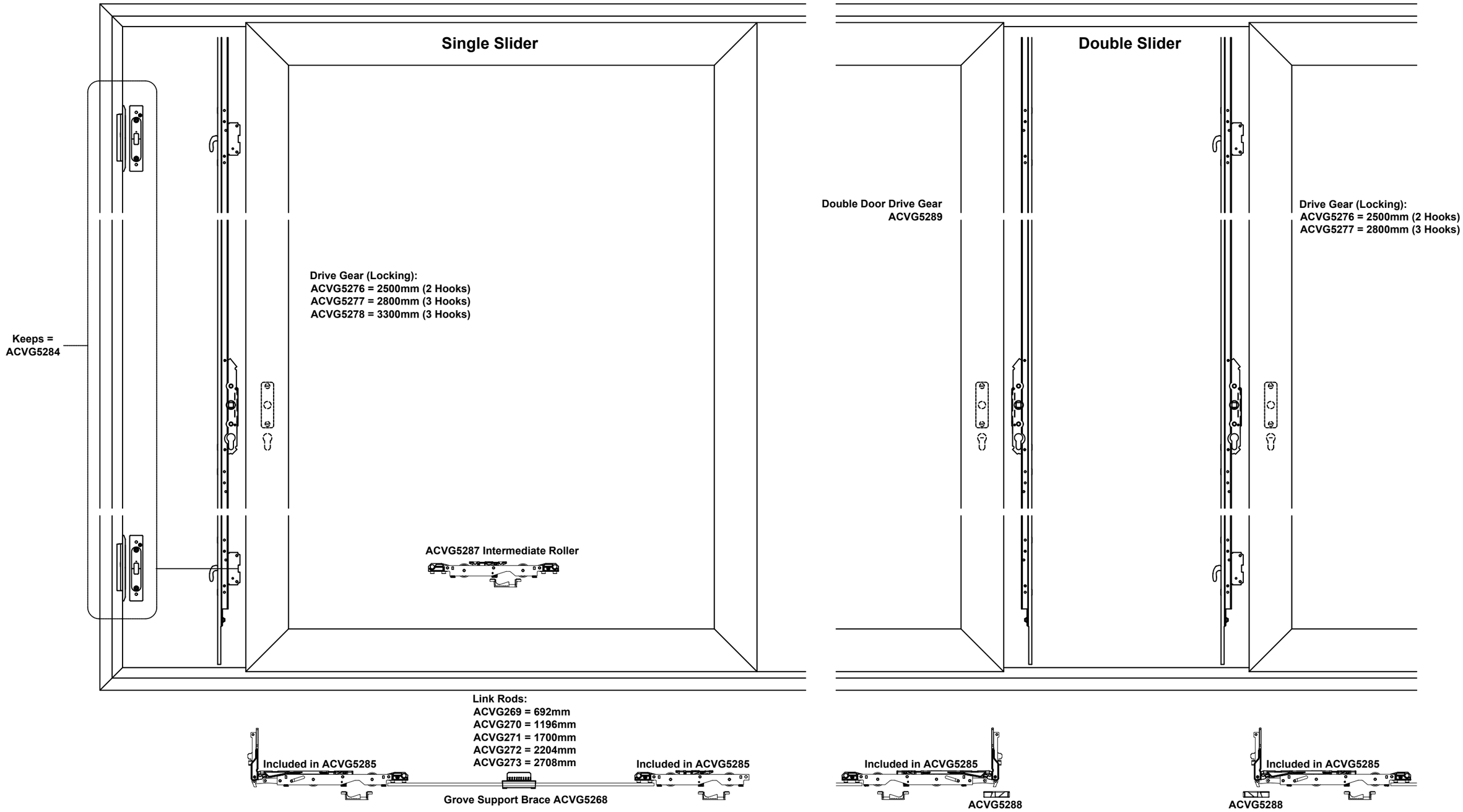

Do Not Scale From This Drawing

High Security Lift & Slide Door Hardware Selection

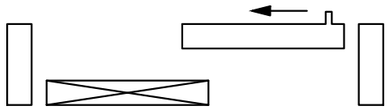

SCHEME A - 2 RAIL-1F-20 PAS 24

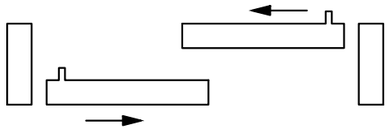

SCHEME B - 2 RAIL-10-20 PAS 24

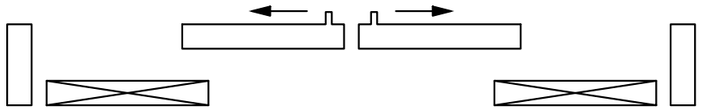

SCHEME C - 2 RAIL-1F-20X20-1F PAS 24

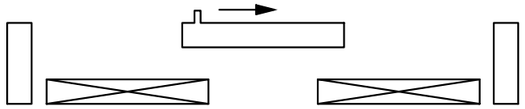

SCHEME D - 2 RAIL-1F-20-1F

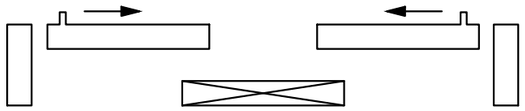

SCHEME E - 2 RAIL-20-1F-20

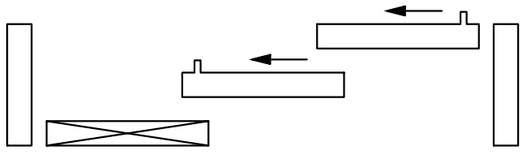

SCHEME F - 3 RAIL-1F-20-30 PAS 24

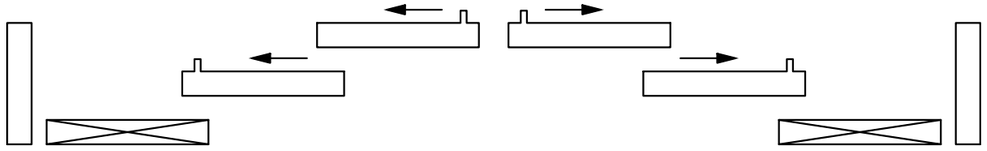

SCHEME G - 2 RAIL-1F-20-30X30-20-1F PAS 24

QUANTITY							DESCRIPTION	PART NUMBER	
A	B	C	D	E	F	G			
1	2	1	1	2	1	1	DRIVE GEAR		ACVG5284 Keeps
							VENT HEIGHT		
							1790mm - 2265mm	ACVG5276	2
							2266mm - 2622mm	ACVG5277	3
							2623mm - 3000mm	ACVG5278	3
1	2	2	1	2	2	4	STANDARD LIFT & SLIDE KIT MAX:270 KG MAX:400 KG IF USING ACVG5287 ADDITIONAL ROLLER	ACVG5285	
1	2	2	1	2	2	4	CONNECTING ROD		
							WIDTH SASH		
							700mm - 1250mm	ACVG269	
							1200mm - 1750mm	ACVG270	
							1700mm - 2250mm	ACVG271	
							2200mm - 2750mm	ACVG272	
							2700mm - 3200mm	ACVG273	
1	2	2	1	2	2	4	GUIDE BRACKET	ACVG5268	
		1			1	3	DOUBLE DOOR DRIVE GEAR	ACVG5289	
		2	1		1	4	DOUBLE DOOR KEEP	ACVG5288	

PAS 24 Using high security lift & slide gearing, scheme can meet PAS24 requirements
Max Vent Width: 2000mm
Max Vent Height: 2500mm

Do Not Scale From This Drawing

High Security Lift & Slide Door with Standard Track

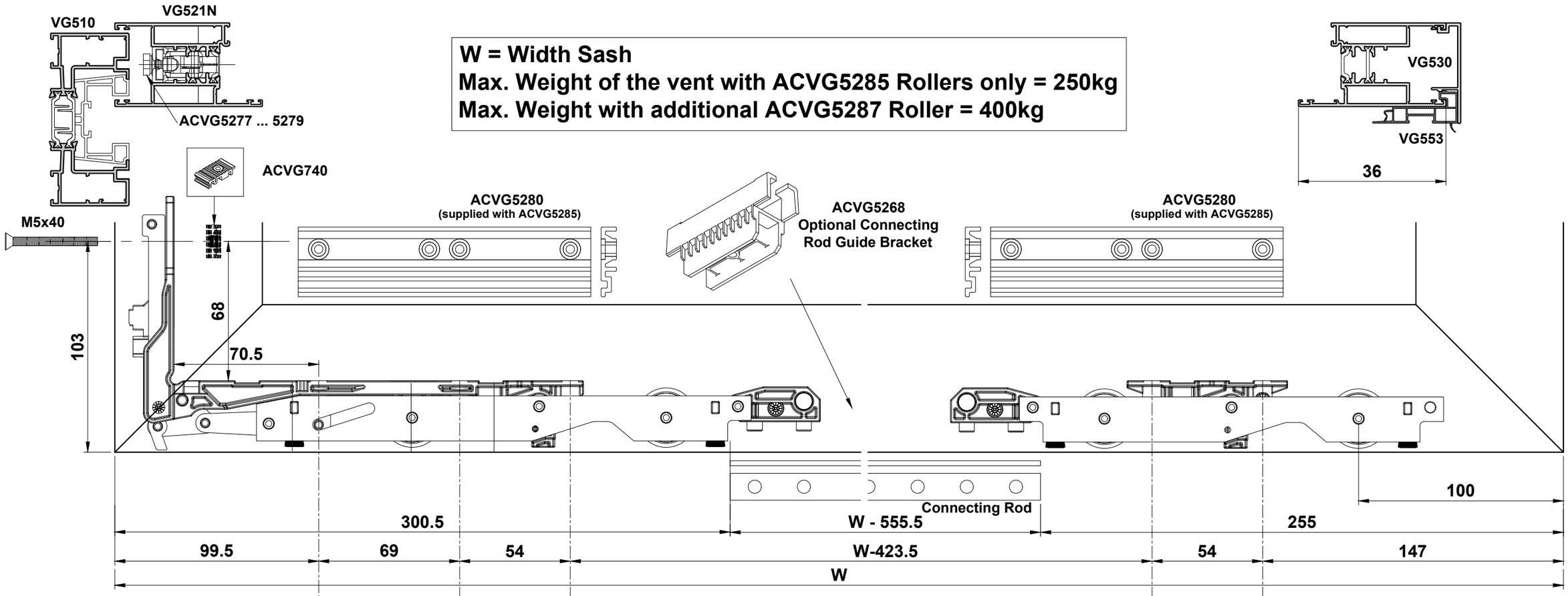

W = Width Sash
Max. Weight of the vent with ACVG5285 Rollers only = 250kg
Max. Weight with additional ACVG5287 Roller = 400kg

Note:
Screws & fixing plates are supplied with ACVG5285 kit

Connecting Rod Options

700mm < W < 1250mm	ACVG269
1200mm < W < 1750mm	ACVG270
1700mm < W < 2250mm	ACVG271
2200mm < W < 2750mm	ACVG272
2700mm < W < 3200mm	ACVG273

Do Not Scale From This Drawing

High Security Lift & Slide Bottom Locking Point Fixing Detail

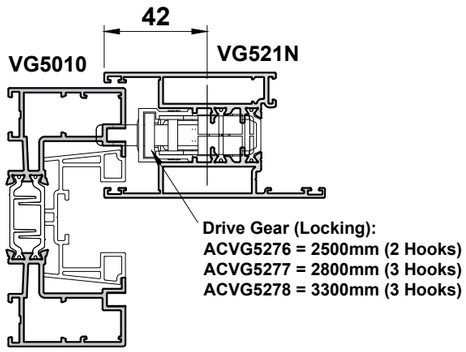

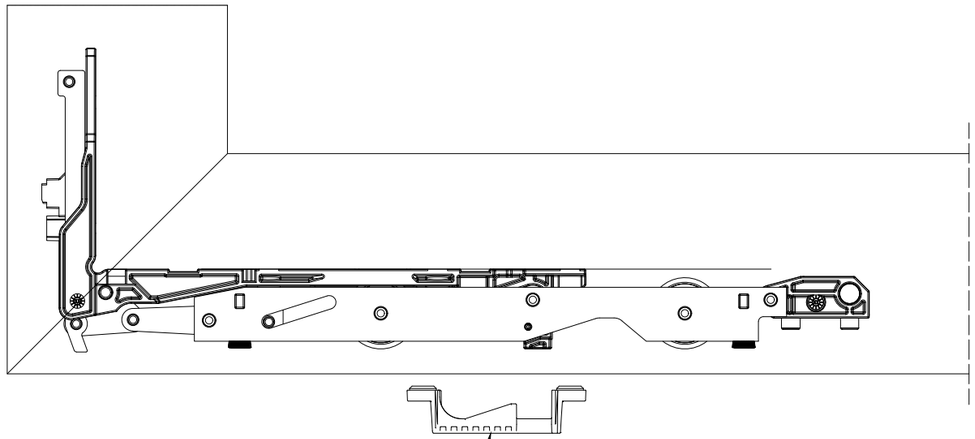

Support Pieces from ACVG5285 kit are required for mechanism to operate correctly.

ACVG5288

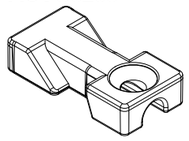

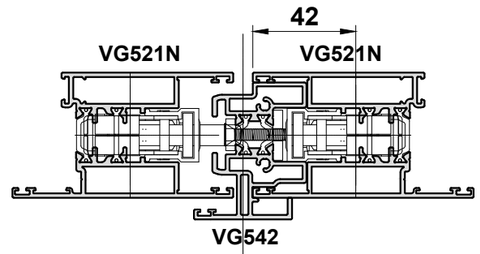

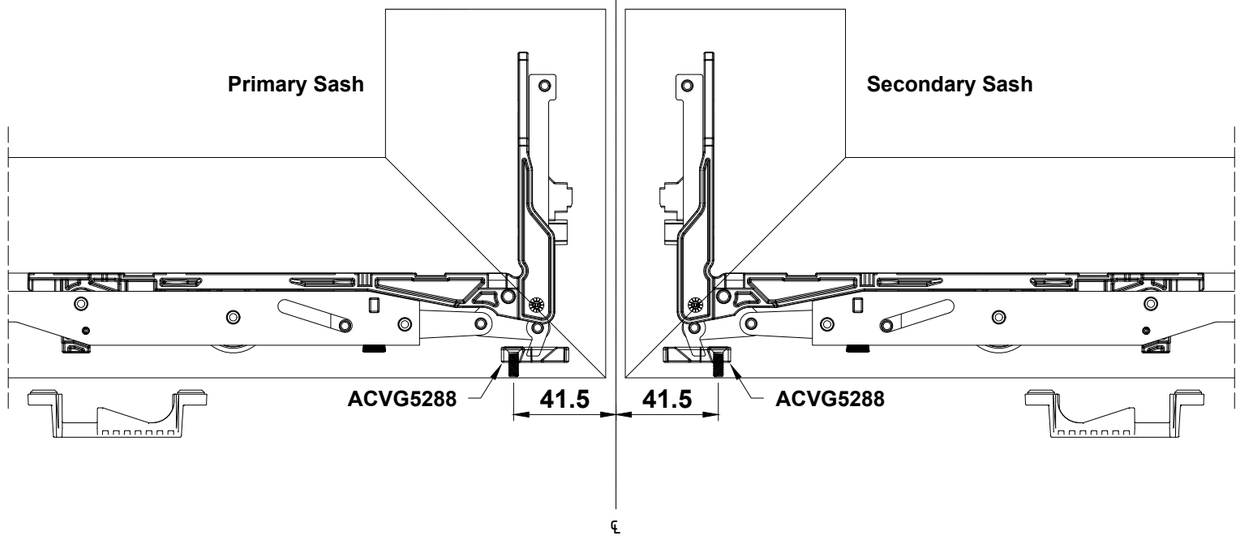

Do Not Scale From This Drawing

High Security Lift & Slide Single Door Locking Details

PAS24 Handle Configuration

ext.	int.			2x
ACSZ871	ACSZ861 / ACSZ863	ACMX1070	ACMX0040	ACET235

Handle Options (not PAS24)

ext.	int.			2x
ACSZ860	ACSZ861 / ACSZ863	ACMX1138	ACMX0040	ACET235
ACSZ862	ACSZ861 / ACSZ863		ACCY4040NKS1	
ACSZ871 + ACSZ400	ACSZ863	ACMX1070	ACMX0040 / ACMX4050	

With Cylinder
Without Cylinder

Vent Height		X (mm)	Y (mm)	Z (mm)
1790 mm - 2265 mm	ACVG5276	788.5	679.5	-
2266 mm - 2622 mm	ACVG5277	788.5	1111.5	211.5
2623 mm - 3000 mm	ACVG5278	788.5	1511.5	411.5

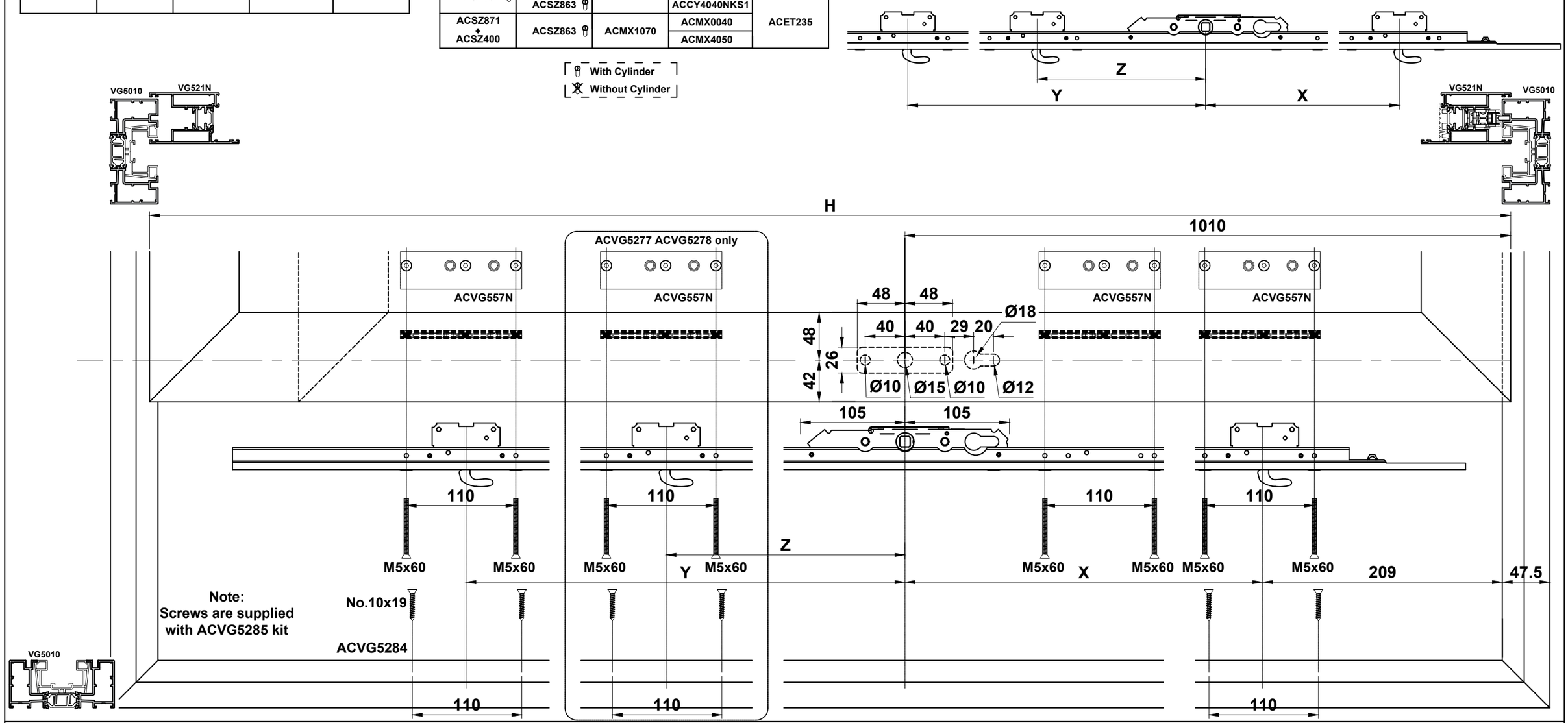

Do Not Scale From This Drawing

High Security Lift & Slide Double Door Lock Details

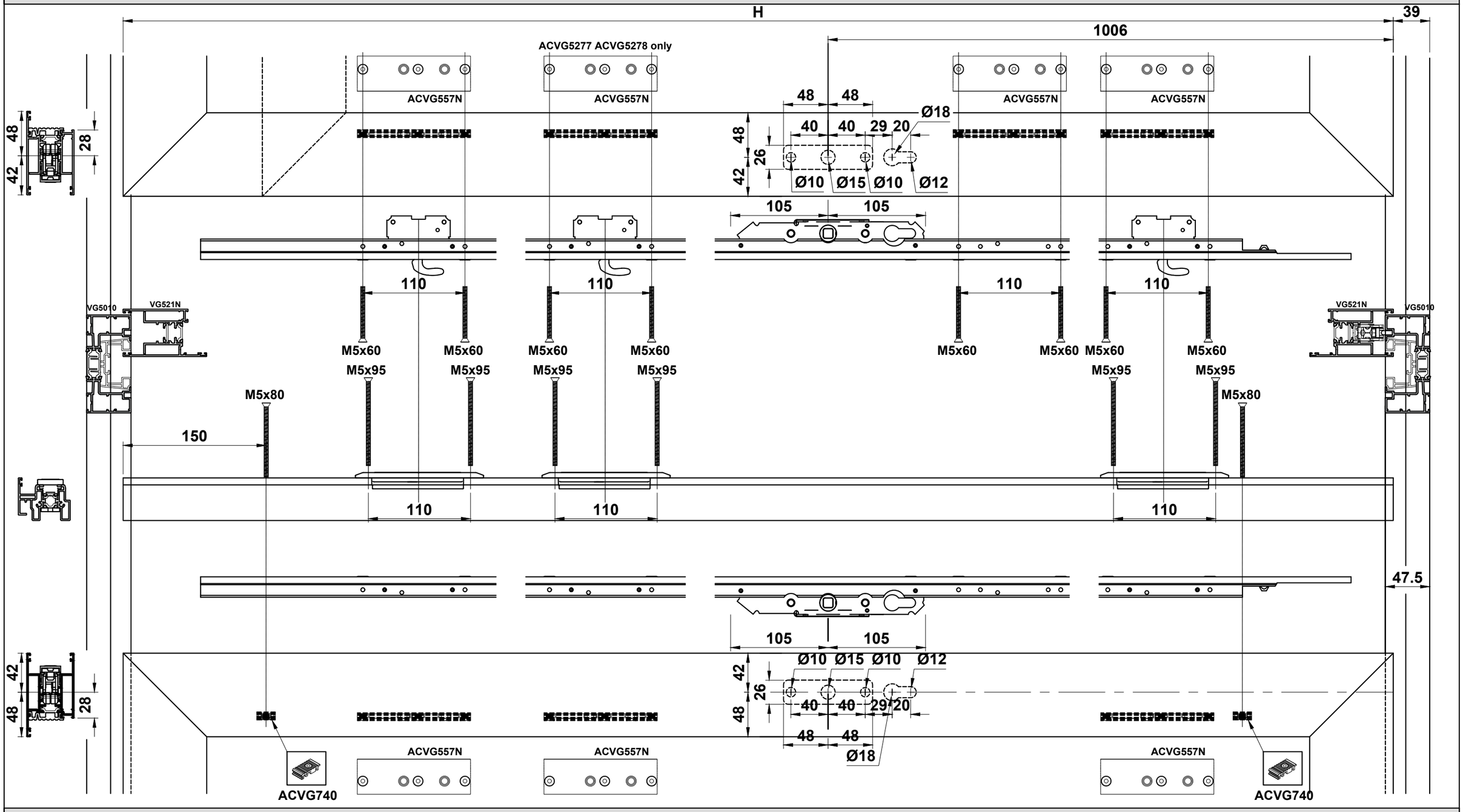

Do Not Scale From This Drawing

High Security Lift & Slide Interlock Security Device ACVG1597N & ACVG597

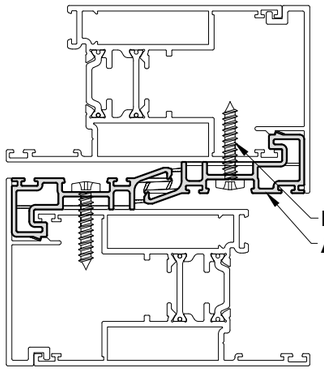

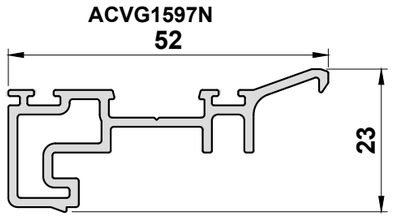

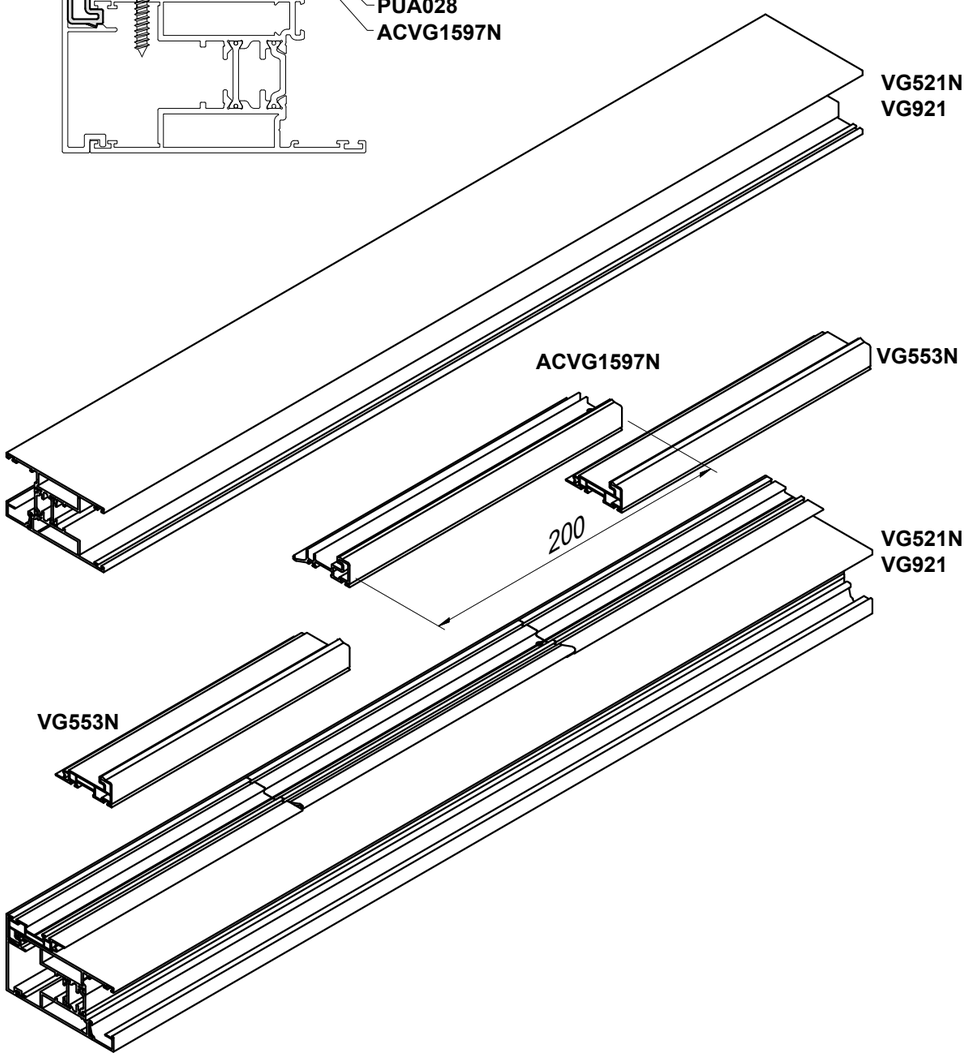

PAS 24 ACVG1597N Interlock Security Device, ACVG256 Interlock Lock and ACVG257 Keep are requirements for PAS24.

PAS24 Overview

20mm Interlock = ACVG597 ▲
Standard Interlock = ACVG1597N ●

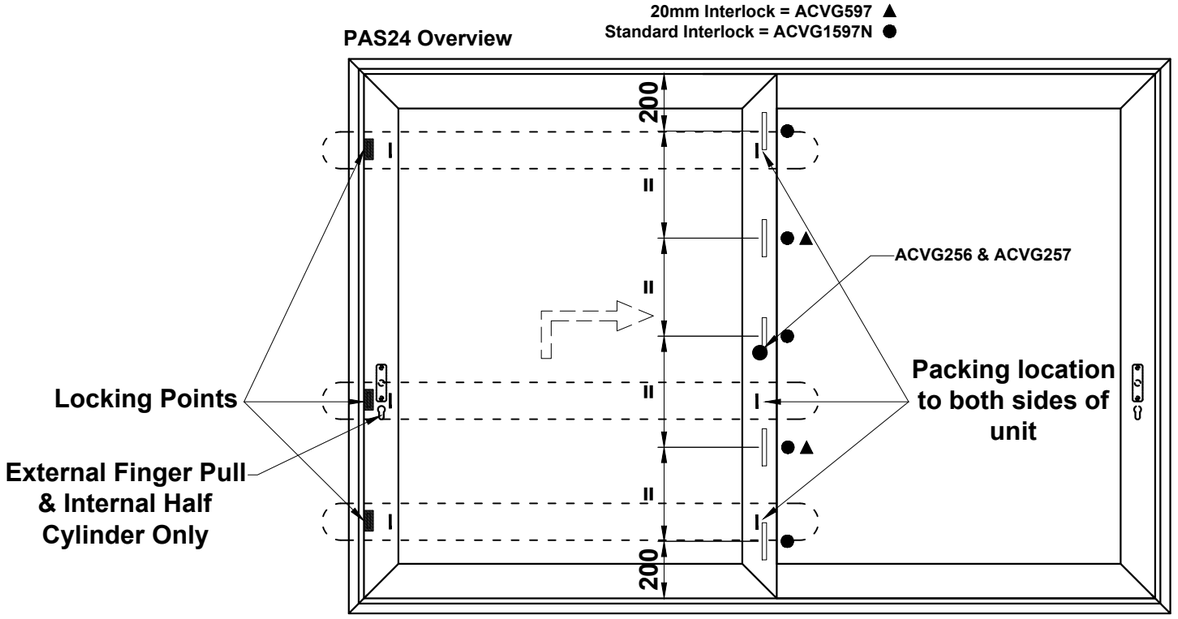

Important Note: 35mm & 20mm Interlock options are not covered by PAS24 on lift & slide doors.

Do Not Scale From This Drawing

High Security Lift & Slide Interlock Pin ACVG256 & ACVG257 Installation

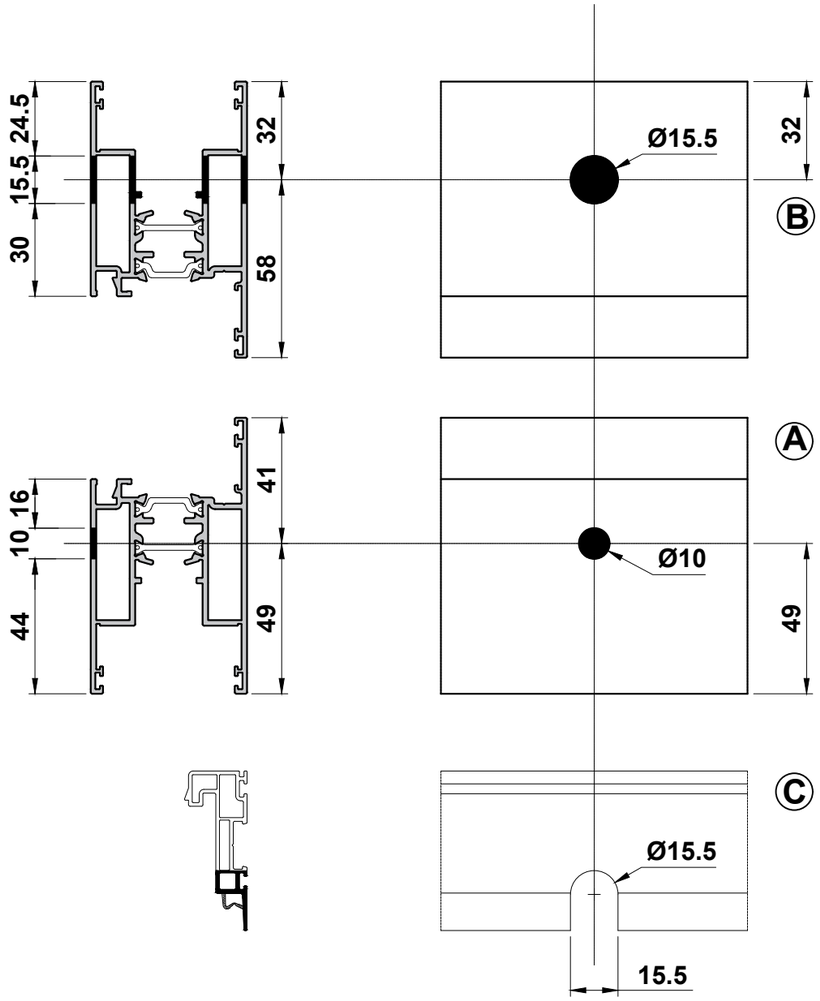

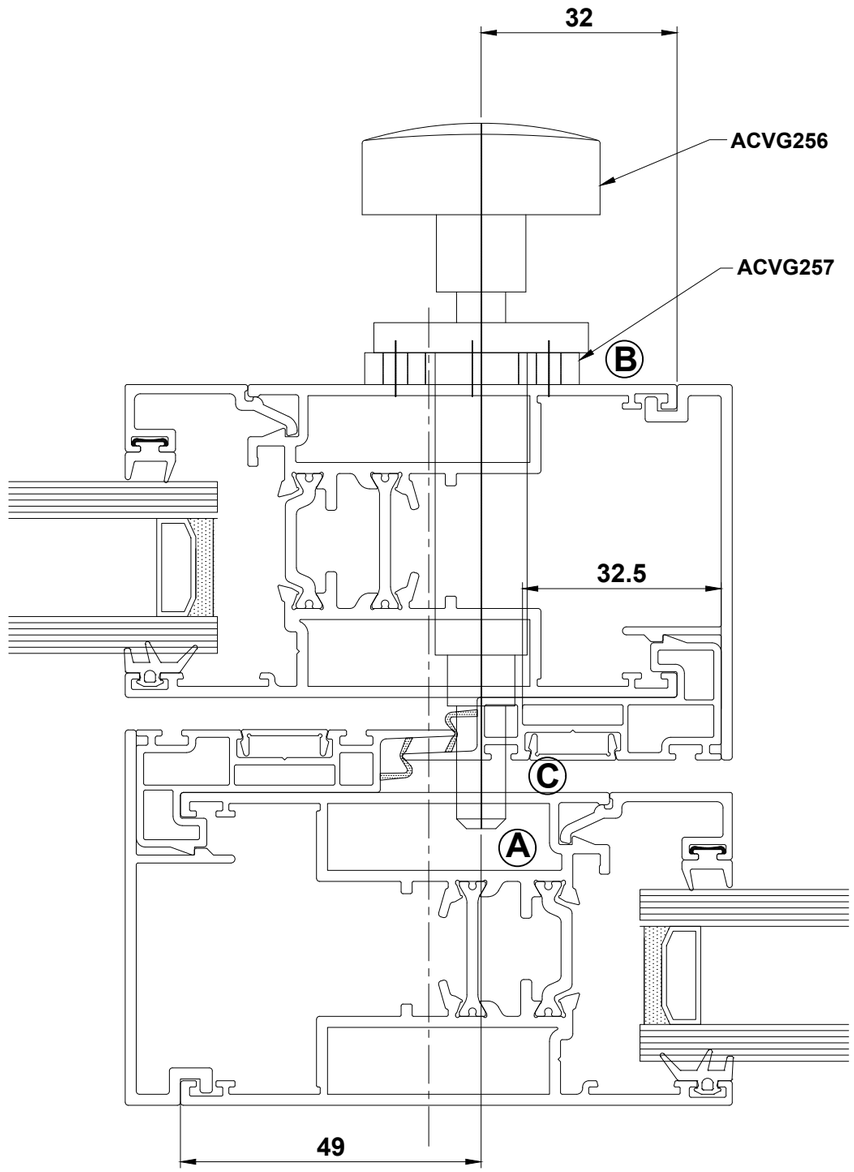

PAS 24 ACVG1597 Interlock Security Device, ACVG256 Interlock Lock and ACVG257 Keep are requirements for PAS24.

Do Not Scale From This Drawing

Lift & Slide Slim Interlock on Standard Track

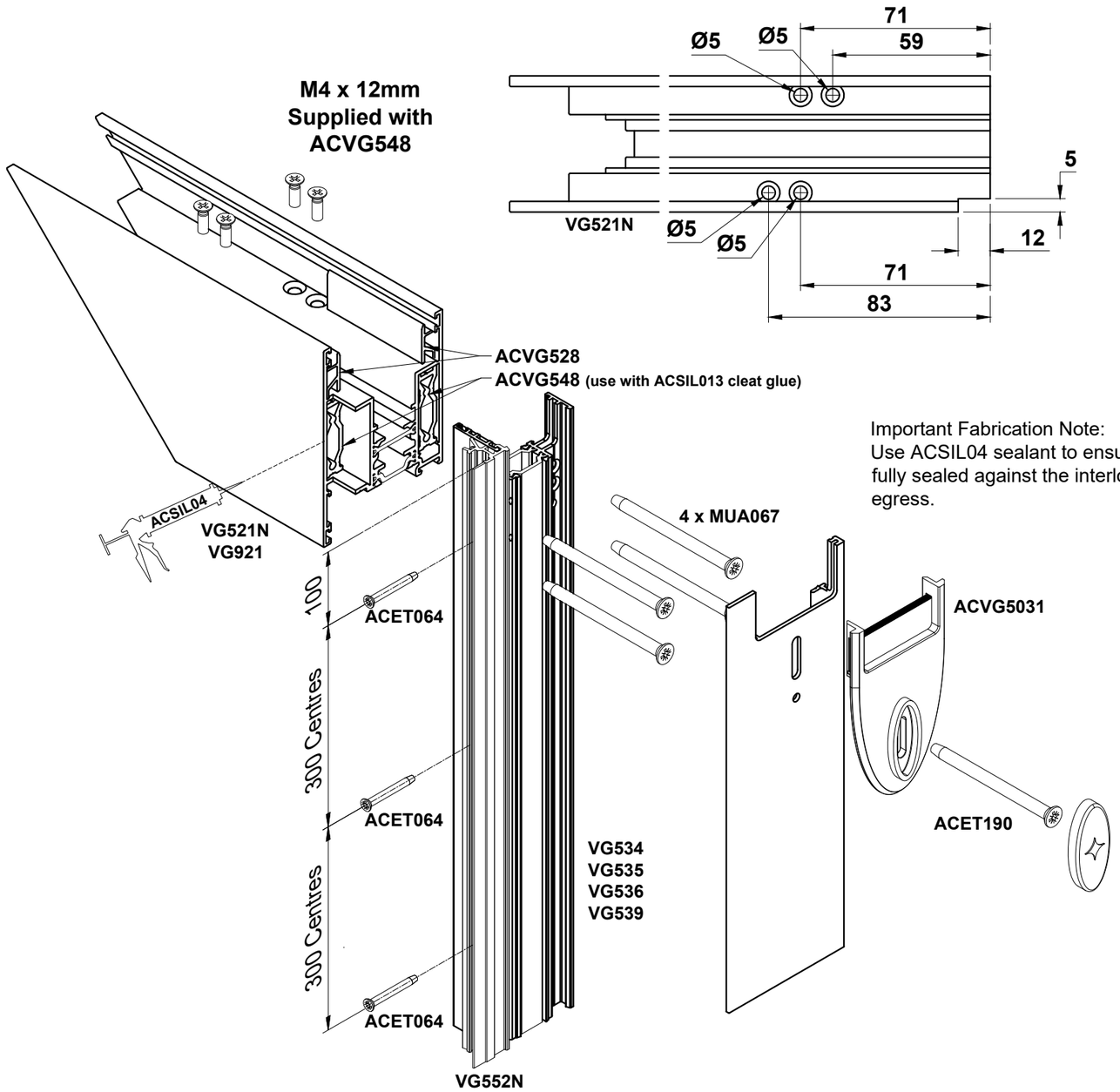

Important Fabrication Note:
Use ACSIL04 sealant to ensure the bottom rail is fully sealed against the interlock to prevent water egress.

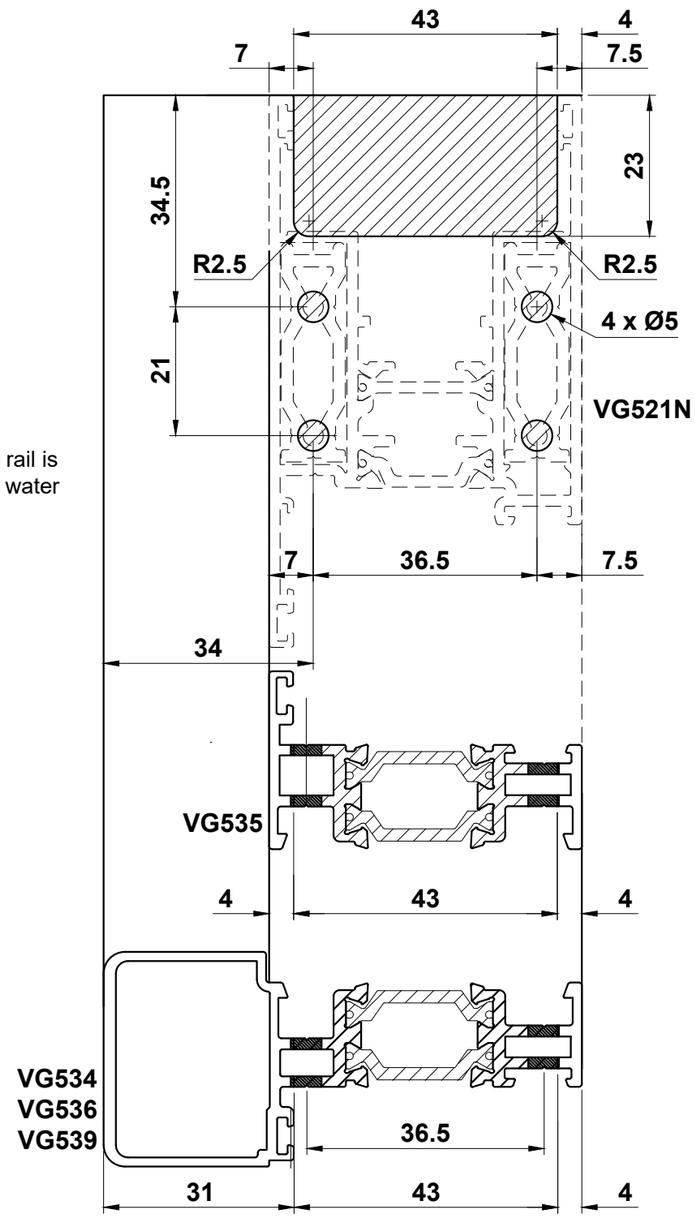

Do Not Scale From This Drawing

Monorail Assembly

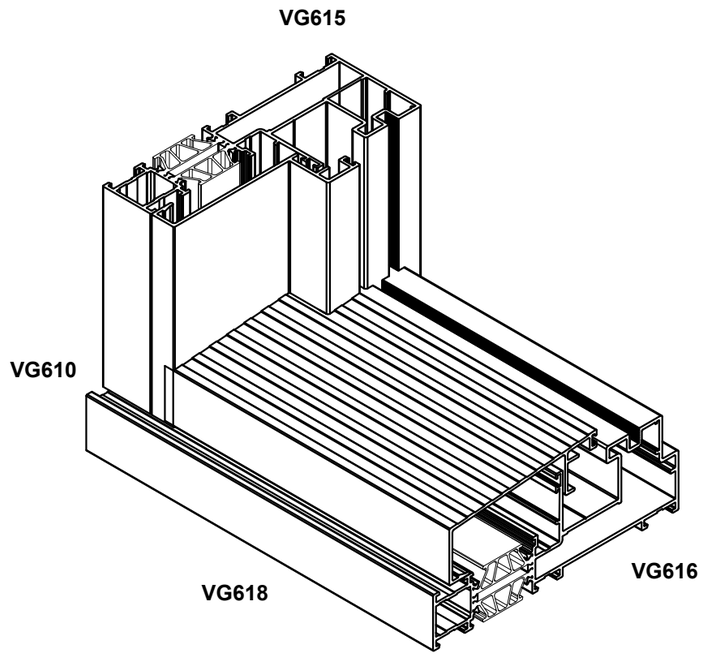

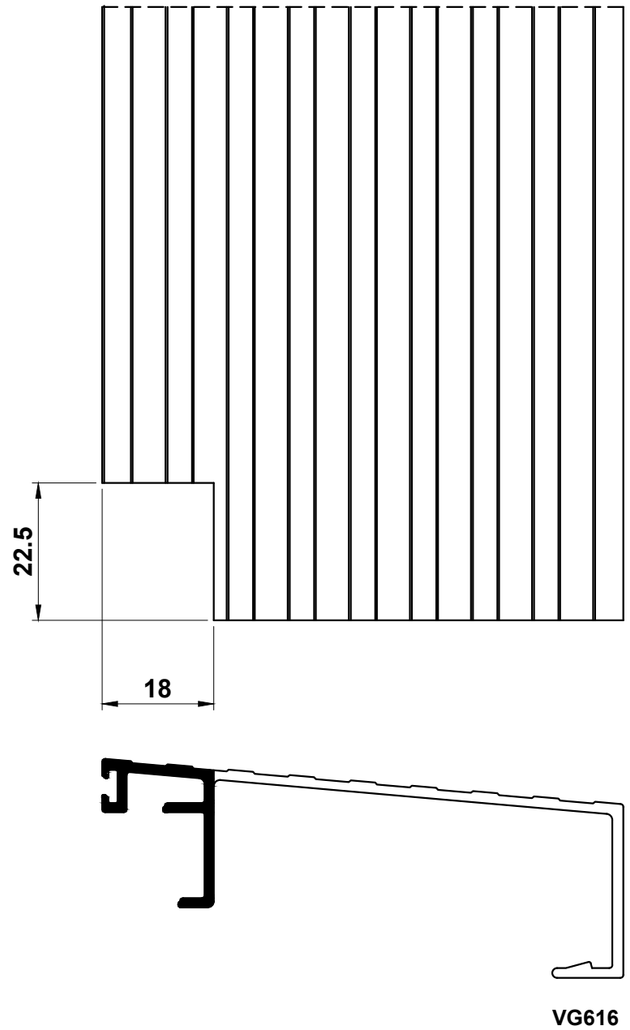

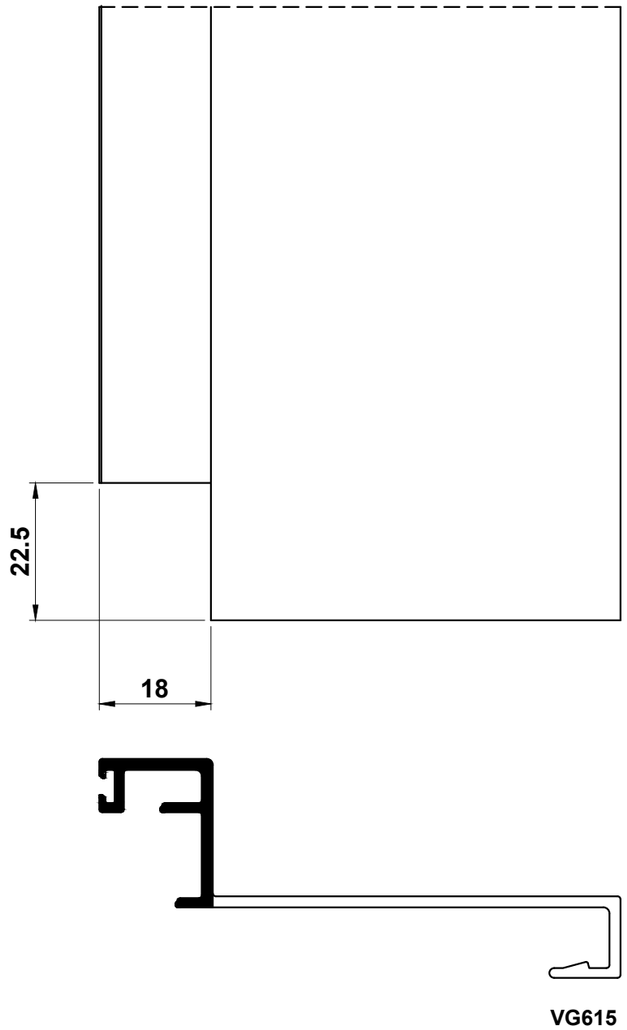

Do Not Scale From This Drawing

Monorail Interlock Sealing

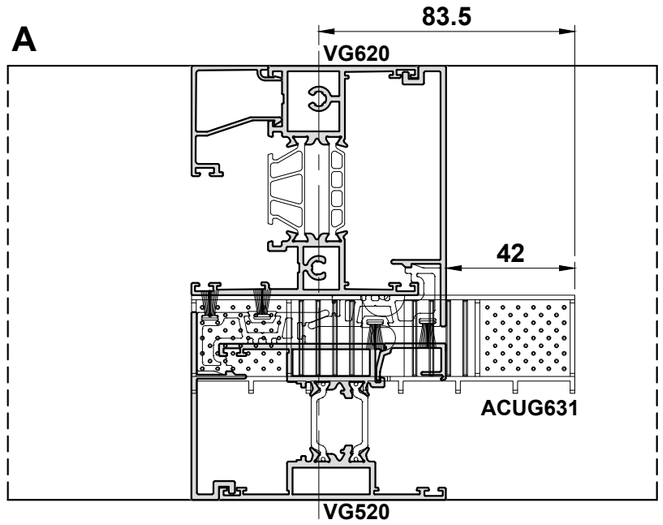

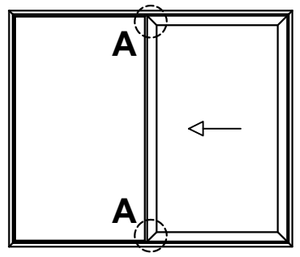

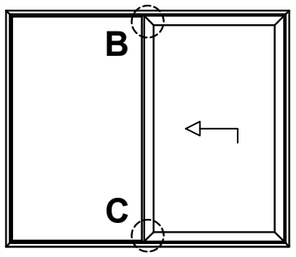

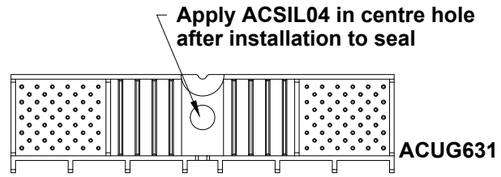

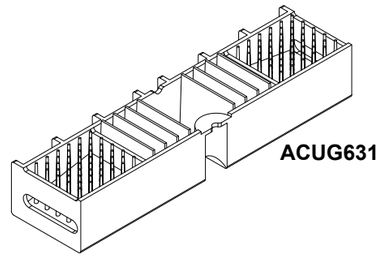

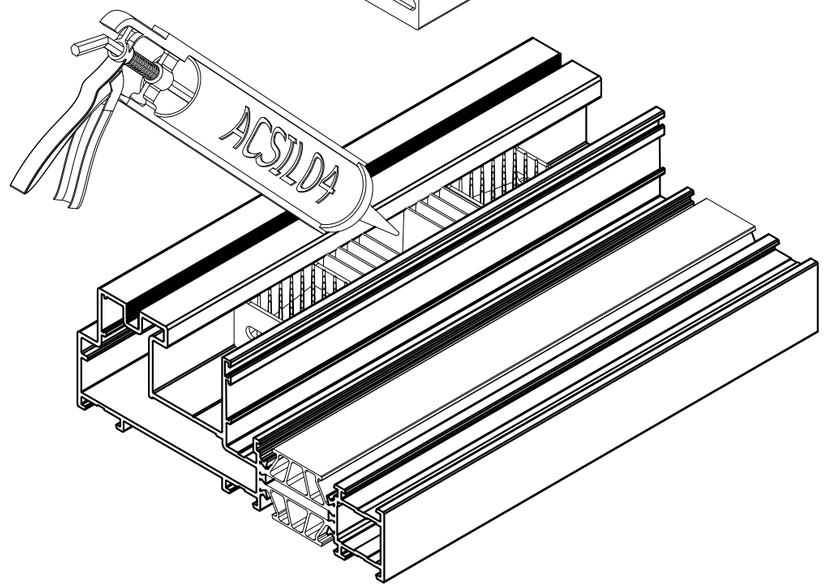

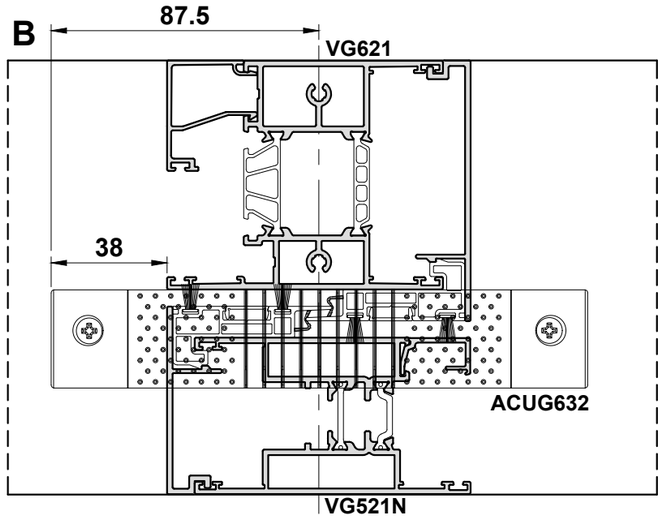

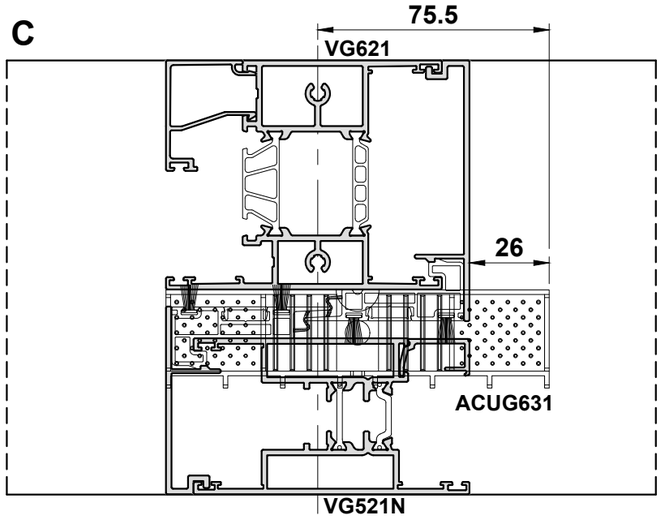

Do Not Scale From This Drawing

Monorail Assembly

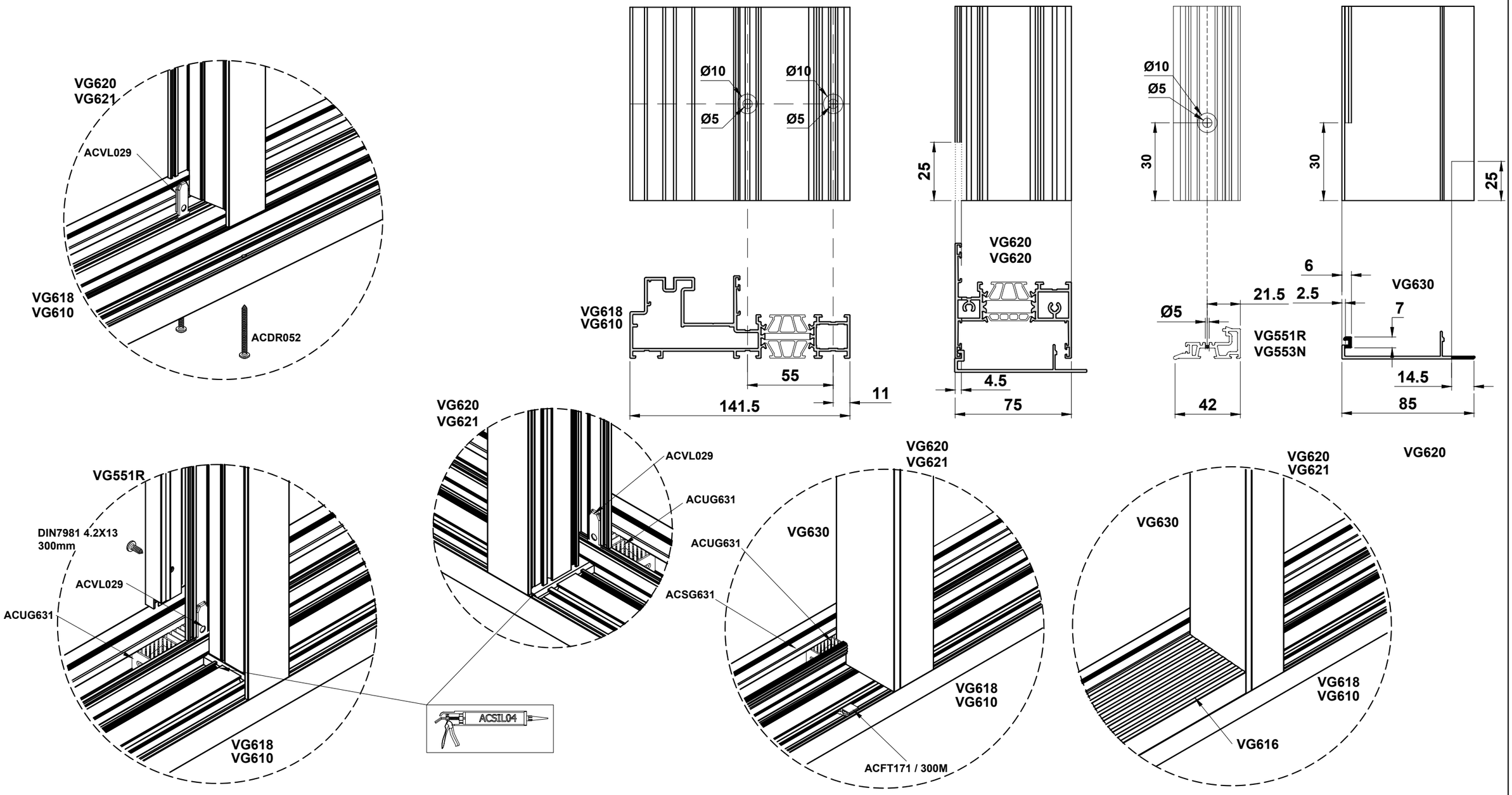

Do Not Scale From This Drawing

Head Extension Fitting Details

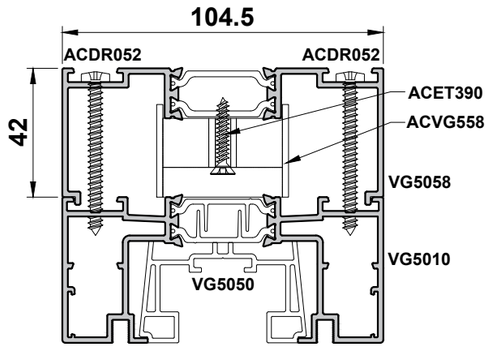

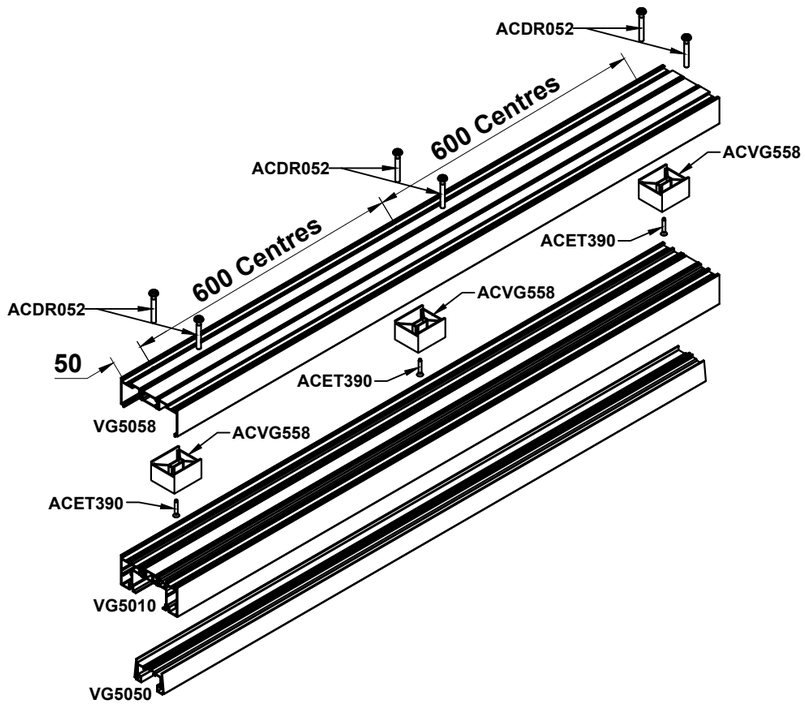

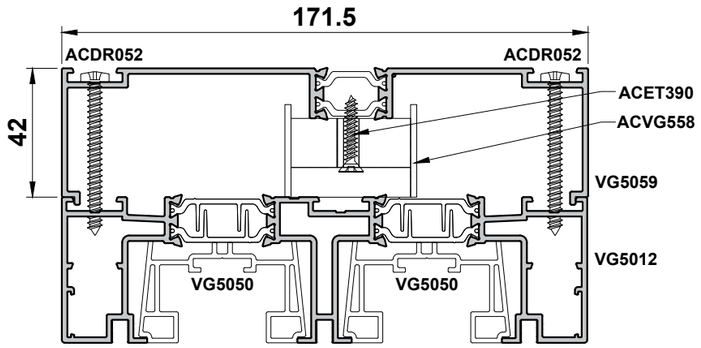

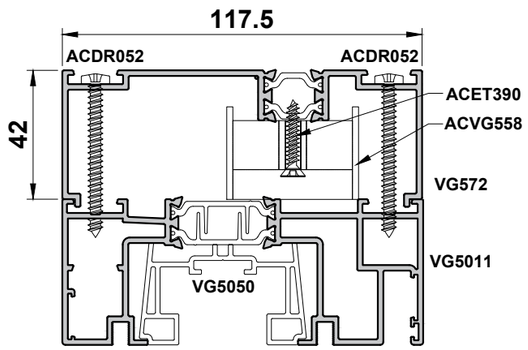

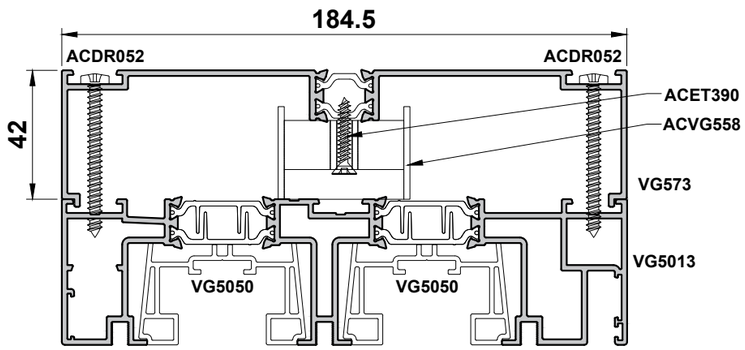

Do Not Scale From This Drawing

Head Extension Fitting Details HYB

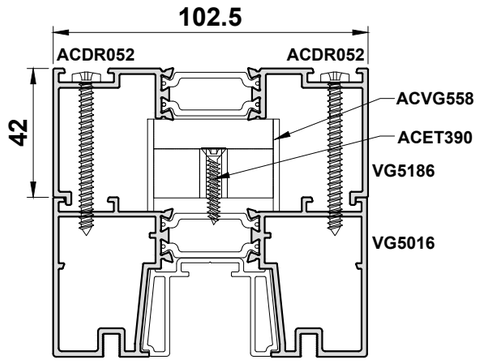

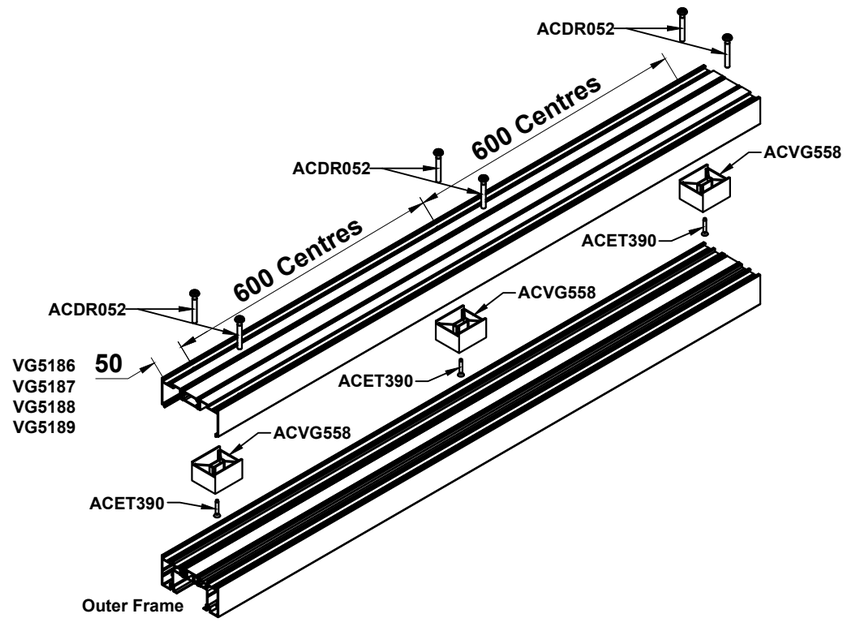

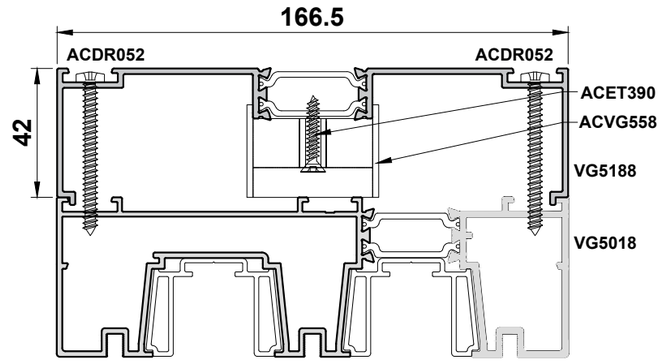

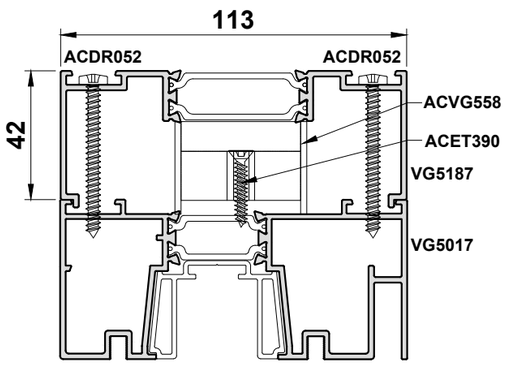

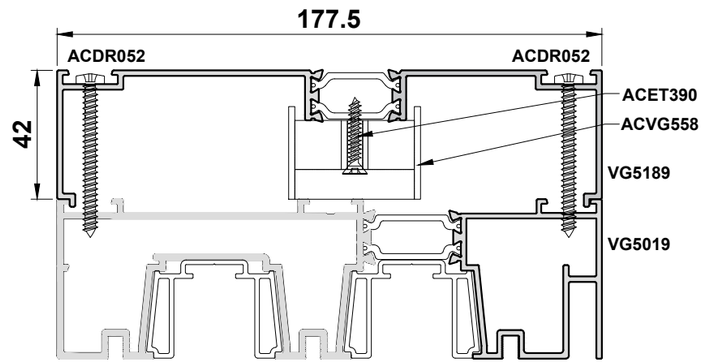

Do Not Scale From This Drawing

Glazing Options

Single Glazing

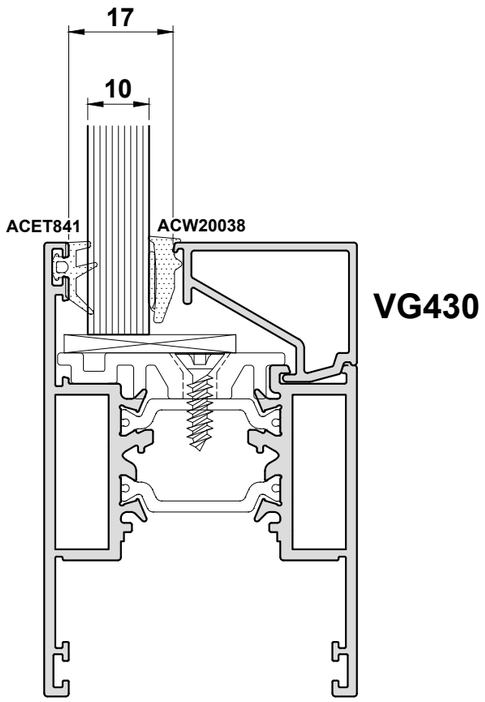

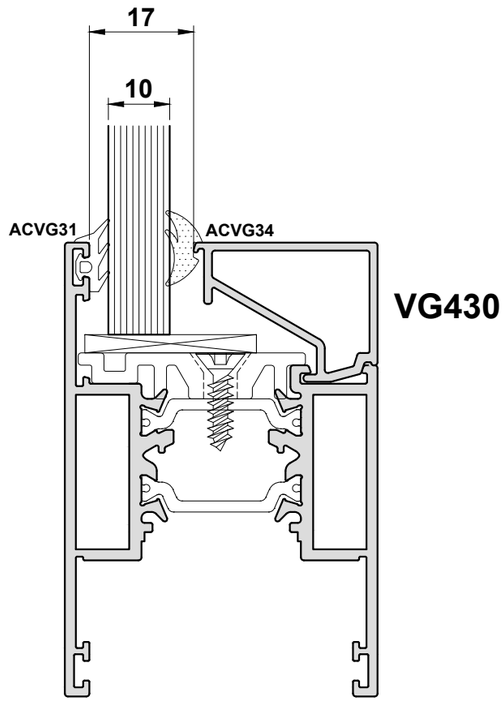

Low Profile Gaskets		
Glazing Thickness	External Gasket	Internal Gasket
10	ACET841	ACW20038
11	ACET842	ACW20038
12	ACET844	ACW20038

Standard Gaskets		
Glazing Thickness	External Gasket	Internal Gasket
8	ACVG131	ACVG340
9	ACVG131	ACVG34
10	ACVG31	ACVG34
11	ACVG231	ACVG34
12	ACVG231	ACVG33

24-26mm Glazing

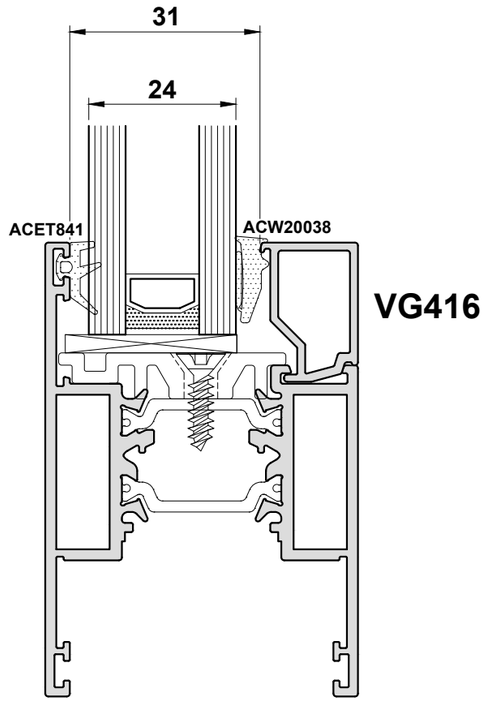

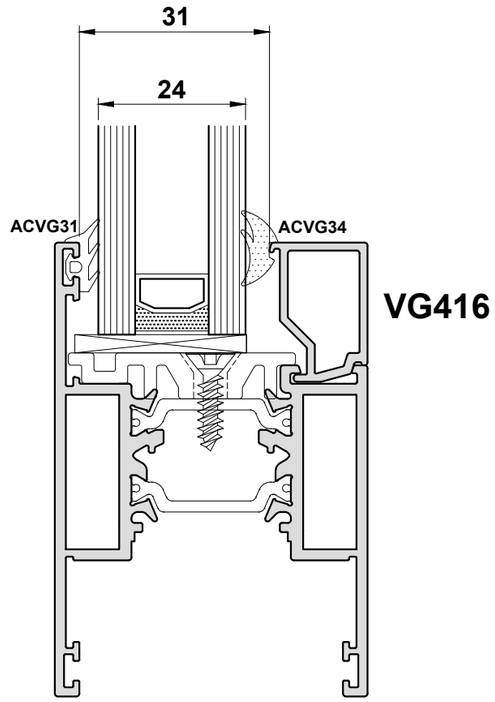

Low Profile Gaskets		
Glazing Thickness	External Gasket	Internal Gasket
24	ACET841	ACW20038
25	ACET842	ACW20038
26	ACET844	ACW20038

Standard Gaskets		
Glazing Thickness	External Gasket	Internal Gasket
24	ACVG31	ACVG34
25	ACVG231	ACVG34
26	ACVG231	ACVG33

Do Not Scale From This Drawing

Glazing Options

28-30mm Glazing

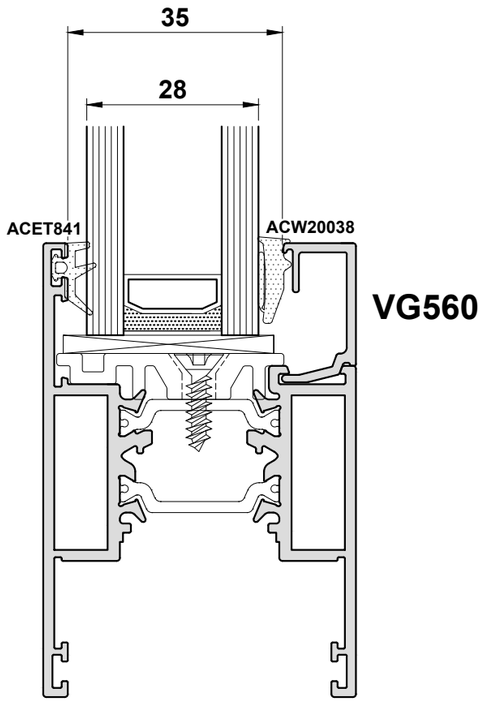

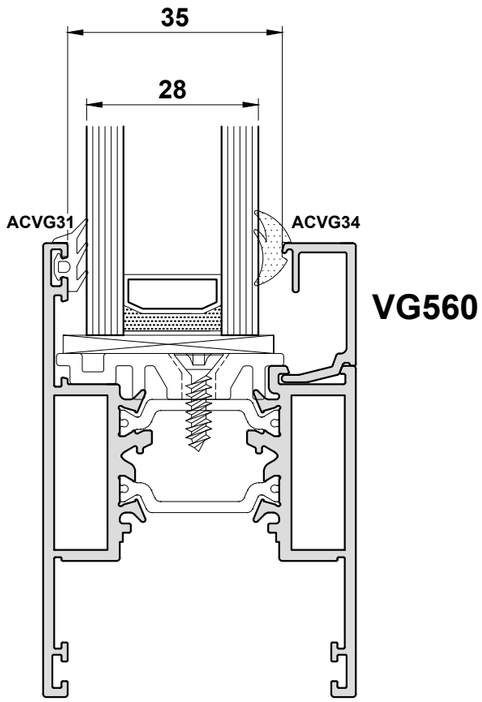

Low Profile Gaskets		
Glazing Thickness	External Gasket	Internal Gasket
28	ACET841	ACW20038
29	ACET842	ACW20038
30	ACET844	ACW20038

Standard Gaskets		
Glazing Thickness	External Gasket	Internal Gasket
28	ACVG31	ACVG34
29	ACVG231	ACVG34
30	ACVG231	ACVG33

30-32mm Glazing

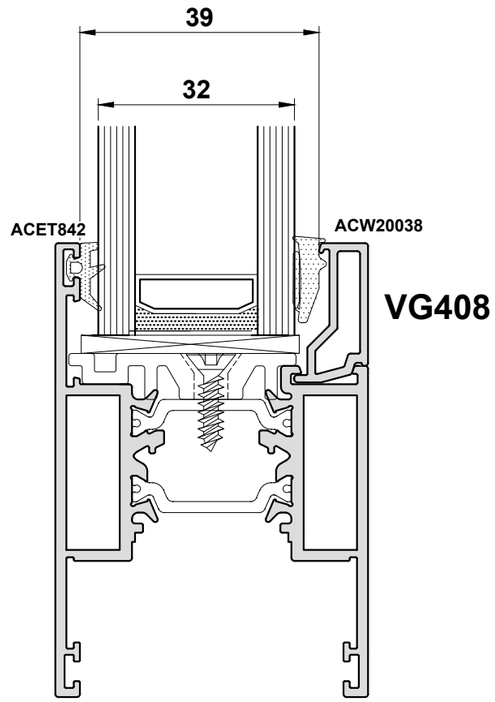

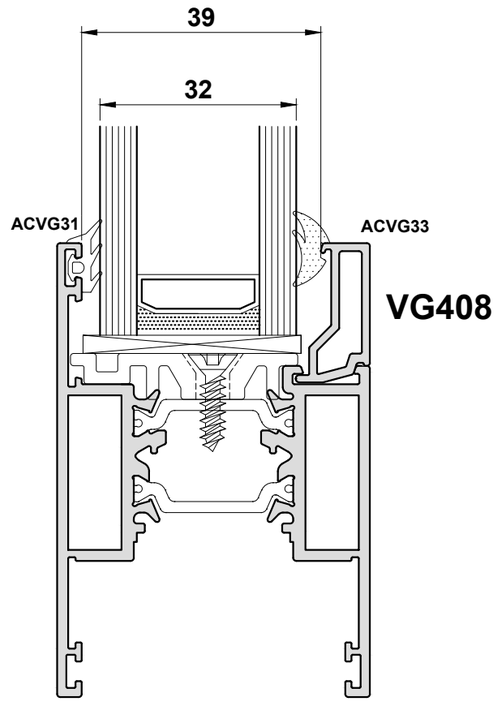

Low Profile Gaskets		
Glazing Thickness	External Gasket	Internal Gasket
30	ACET848	ACW20038
31	ACET841	ACW20038
32	ACET842	ACW20038

Standard Gaskets		
Glazing Thickness	External Gasket	Internal Gasket
30	ACVG131	ACVG34
31	ACVG31	ACVG34
32	ACVG31	ACVG33

Do Not Scale From This Drawing

Glazing Options

36-38mm Glazing

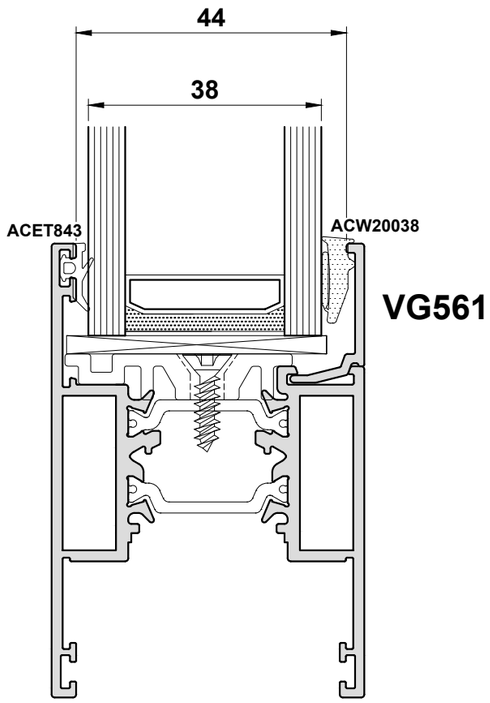

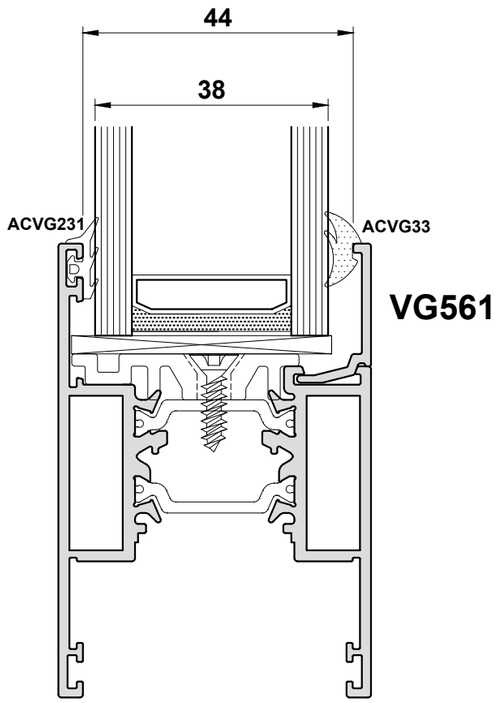

Low Profile Gaskets		
Glazing Thickness	External Gasket	Internal Gasket
36	ACET841	ACW20038
37	ACET842	ACW20038
38	ACET844	ACW20038

Standard Gaskets		
Glazing Thickness	External Gasket	Internal Gasket
36	ACVG31	ACVG34
37	ACVG231	ACVG34
38	ACVG231	ACVG33

Do Not Scale From This Drawing

Glazing Options

28-30mm Glazing

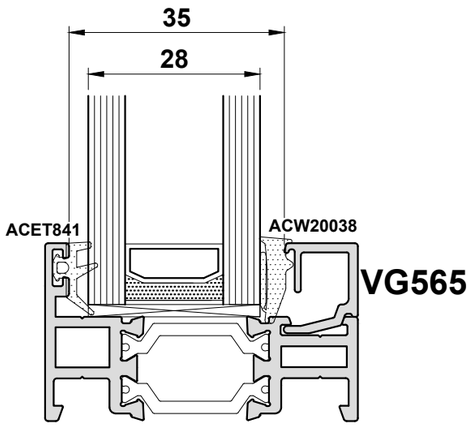

VG535
VG536
VG539

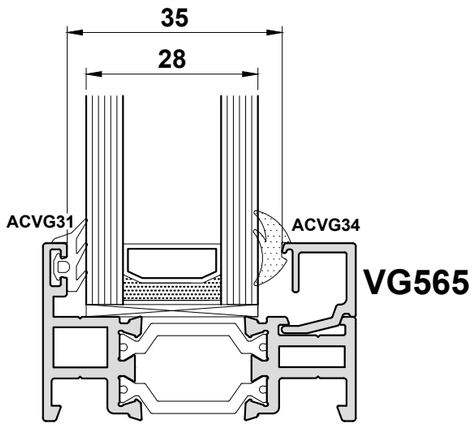

VG535
VG536
VG539

Low Profile Gaskets		
Glazing Thickness	External Gaskets	Internal Gasket
28	ACET841	ACW20038
29	ACET842	ACW20038
30	ACET844	ACW20038

Standard Gaskets		
Glazing Thickness	External Gasket	Internal Gasket
28	ACVG31	ACVG34
29	ACVG231	ACVG34
30	ACVG231	ACVG33

36-38mm Glazing

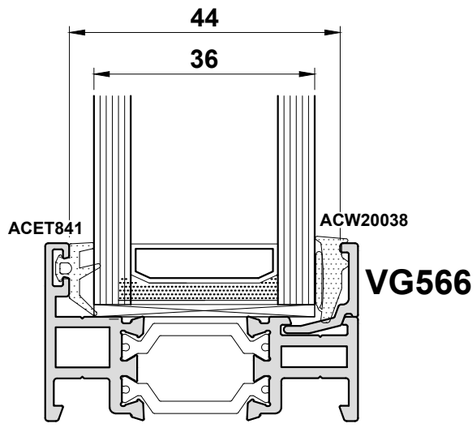

VG535
VG536
VG539

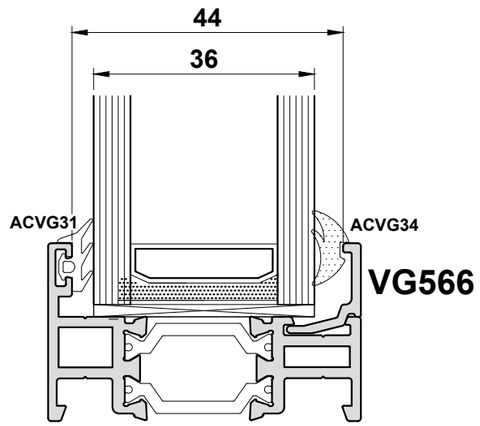

VG535
VG536
VG539

Low Profile Gaskets		
Glazing Thickness	External Gasket	Internal Gasket
36	ACET841	ACW20038
37	ACET842	ACW20038
38	ACET844	ACW20038

Standard Gaskets		
Glazing Thickness	External Gasket	Internal Gasket
36	ACVG31	ACVG34
37	ACVG231	ACVG34
38	ACVG231	ACVG33

Do Not Scale From This Drawing

Glazing Options

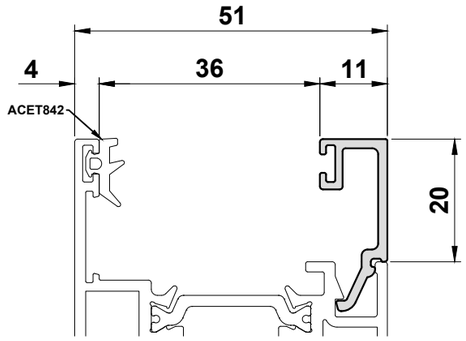

VG920, VG921 & VG960

Standard Gaskets		
Glazing Thickness	External Gasket	Internal Gasket
28	ACET842	ACET848
29	ACET842	ACW20038
30	ACET842	ACW20038

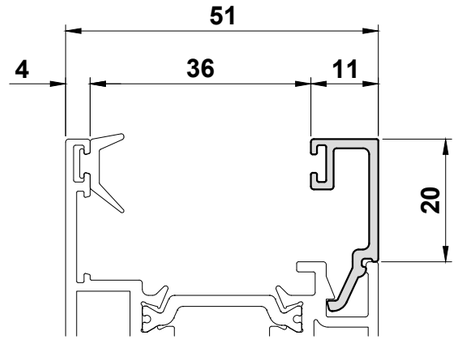

VG920G, VG921G & VG960

Standard Gaskets		
Glazing Thickness	External Gasket	Internal Gasket
28	Integrated	ACET848
29		ACW20038
30		ACW20038

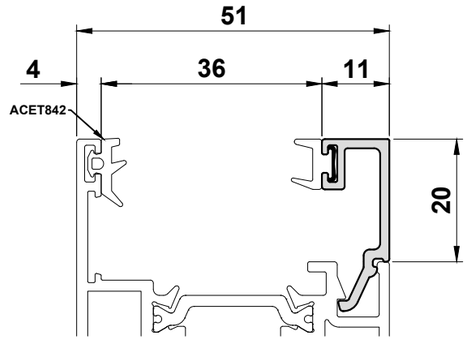

VG920, VG921 & VG960G

Standard Gaskets		
Glazing Thickness	External Gasket	Internal Gasket
28	ACET842	Integrated
29 (28.8)	ACUN3065	

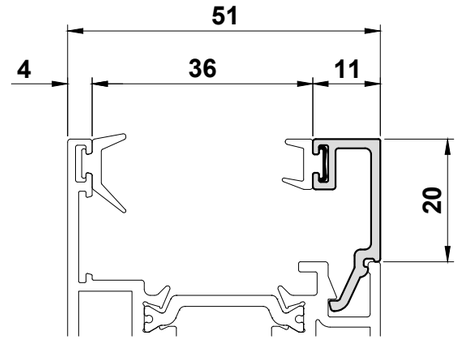

VG920G, VG921G & VG960G

Standard Gaskets		
Glazing Thickness	External Gasket	Internal Gasket
28	Integrated	Integrated

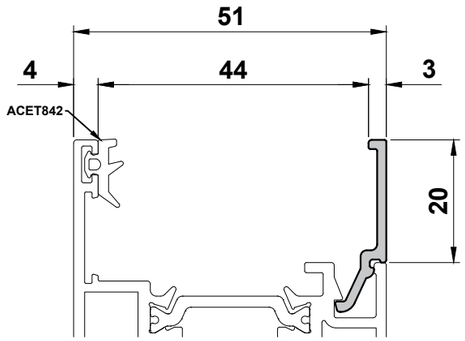

VG920, VG921 & VG964

Standard Gaskets		
Glazing Thickness	External Gasket	Internal Gasket
36	ACET842	ACET848
37	ACET842	ACW20038
38	ACET842	ACW20038

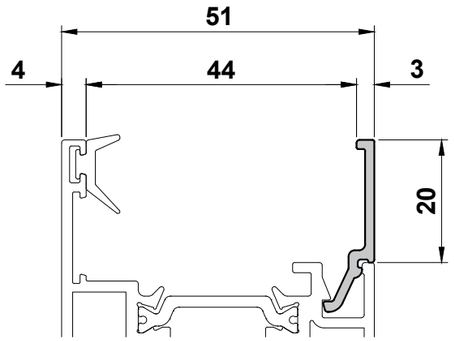

VG920G, VG921G & VG964

Standard Gaskets		
Glazing Thickness	External Gasket	Internal Gasket
36	Integrated	ACET848
37		ACW20038
38		ACW20038

Do Not Scale From This Drawing

Glazing Options

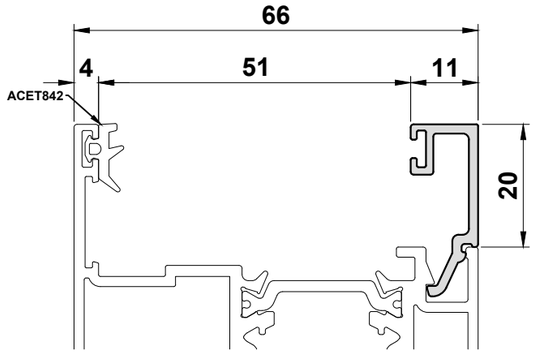

VG5023/24 & VG960

Standard Gaskets		
Glazing Thickness	External Gasket	Internal Gasket
43	ACET842	ACET848
44	ACET842	ACW20038
45	ACET842	ACW20038

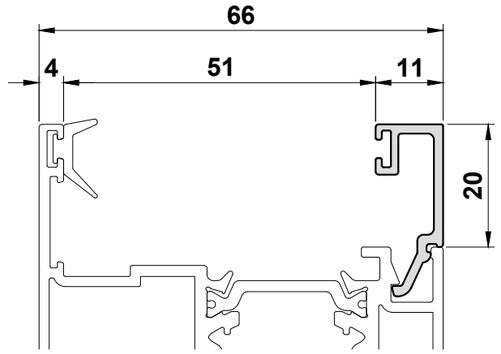

VG5023G/24G & VG960

Standard Gaskets		
Glazing Thickness	External Gasket	Internal Gasket
43	Integrated	ACET848
44		ACW20038
45		ACW20038

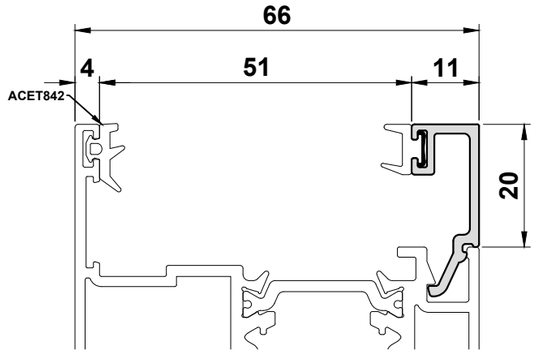

VG5023/24 & VG960G

Standard Gaskets		
Glazing Thickness	External Gasket	Internal Gasket
43	ACET842	Integrated
44	ACUN3065	

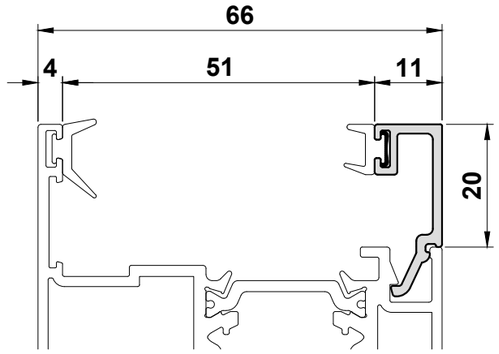

VG5023G/24G & VG960G

Standard Gaskets		
Glazing Thickness	External Gasket	Internal Gasket
43	Integrated	Integrated

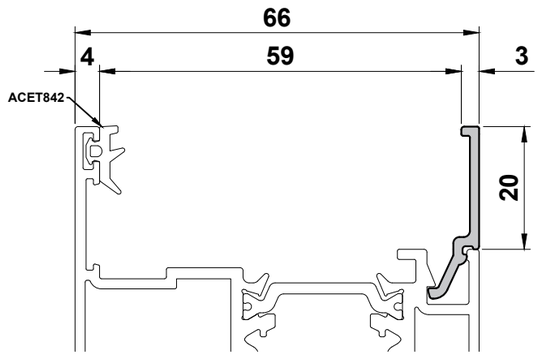

VG5023/24 & VG964

Standard Gaskets		
Glazing Thickness	External Gasket	Internal Gasket
51	ACET842	ACET848
52	ACET842	ACW20038
53	ACET842	ACW20038

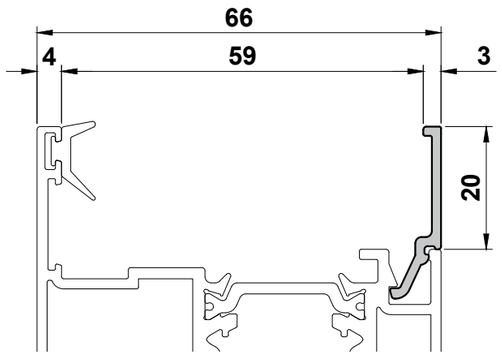

VG5023G/24G & VG964

Standard Gaskets		
Glazing Thickness	External Gasket	Internal Gasket
51	Integrated	ACET848
52		ACW20038
53		ACW20038

Do Not Scale From This Drawing

Glazing Options

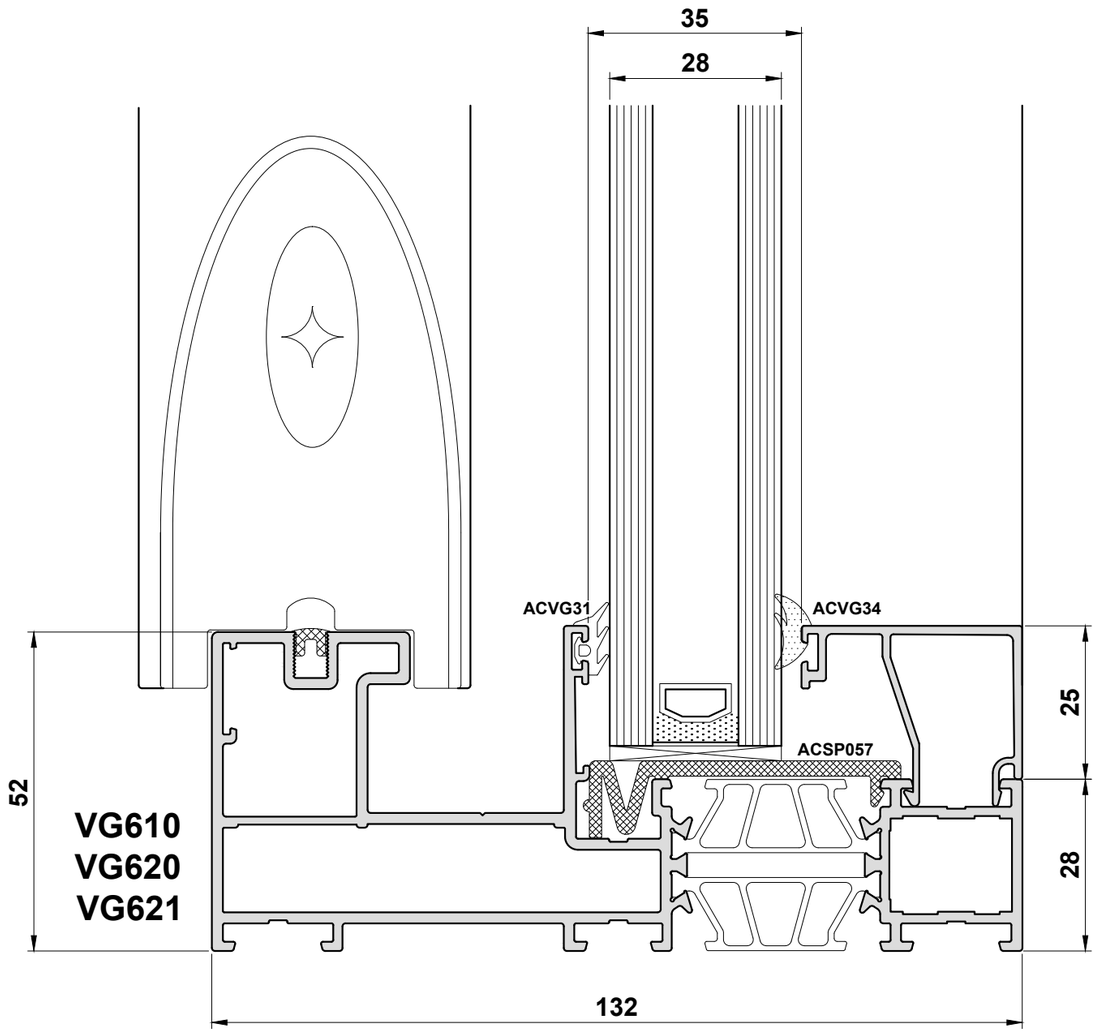

Standard Gaskets			
Glazing Thickness	Bead	External Gasket	Internal Gasket
24	GL740	ACVG31	ACVG34
25	GL740	ACVG231	ACVG34
26	GL740	ACVG231	ACVG33
28	GL736	ACVG31	ACVG34
29	GL736	ACVG231	ACVG34
30	GL736	ACVG231	ACVG33
32	GL732	ACVG31	ACVG34
33	GL732	ACVG231	ACVG34
34	GL732	ACVG231	ACVG33
36	GL728	ACVG231	ACVG34
37	GL728	ACVG231	ACVG33
38	GL724	ACVG131	ACVG34
39	GL724	ACVG31	ACVG34
40	GL724	ACVG231	ACVG34

Do Not Scale From This Drawing

PAS24:2022 Overview

Lock & Keep Fixing Details for Multi Point Lock

1

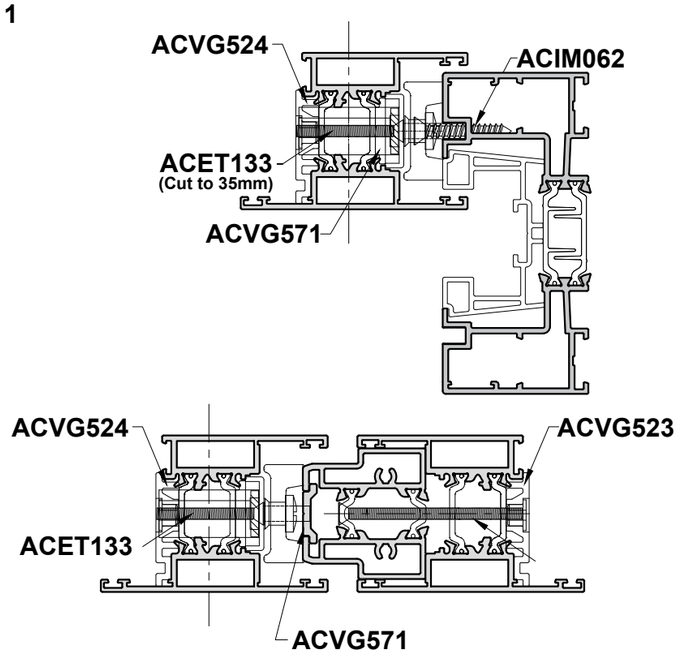

Lock Fixing Details for BT Lock

2

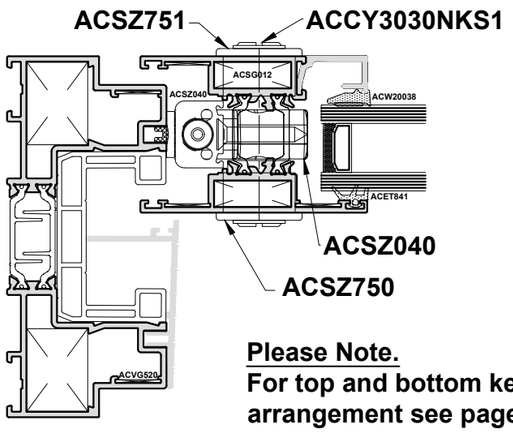

Please Note.
For top and bottom keep arrangement see page E16

The details on this page show the specific hardware required to achieve PAS24:2022.
Hardware not shown is standard.

Multi-Point Locking Hardware

1

SASH HEIGHT	LOCKS	KEEPS	
		FULL HEIGHT KEEP	FULL HEIGHT KEEP + 600mm
2024 - 2223	ACSZ024	ACSZ122	ACSZ124
1824 - 2023	ACSZ025	ACSZ126	ACSZ128
2224 - 2423	ACSZ026	ACSZ130	ACSZ132

EXT.	INT.			3 x
ACSZ882	ACSZ883	ACMX209	ACCY4040NKS1	ACET237

BT Locking Hardware

2

SASH HEIGHT	LOCKS	KEEPS
≤ 2366mm	ACSZ040	ACSZ046/050
≤ 2766mm	ACSZ041	ACSZ046/050
≤ 3166mm*	ACSZ042	ACSZ046/050

	Or...	EXT.	INT.	
ACSZ400		ACSZ750	ACSZ751	ACCY3030NKS1

ACVG752 to Top & Bottom

1

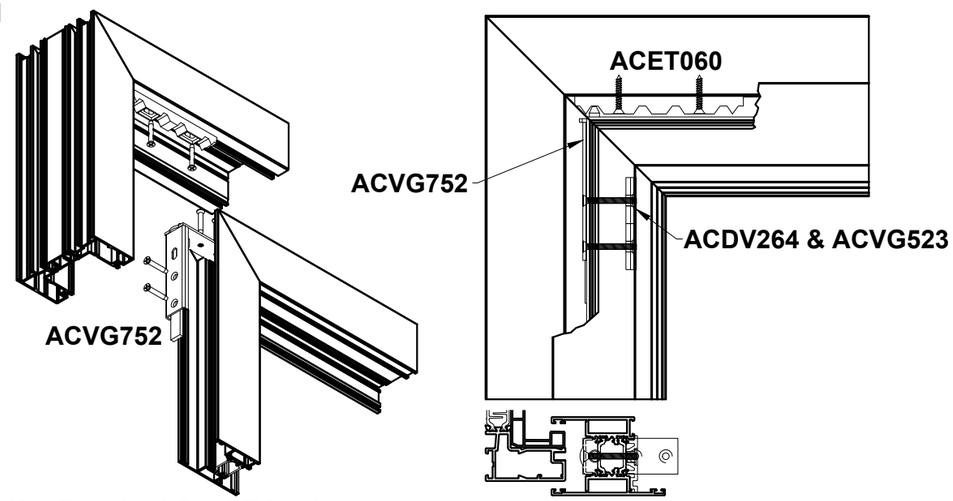

Not Required For BT Lock

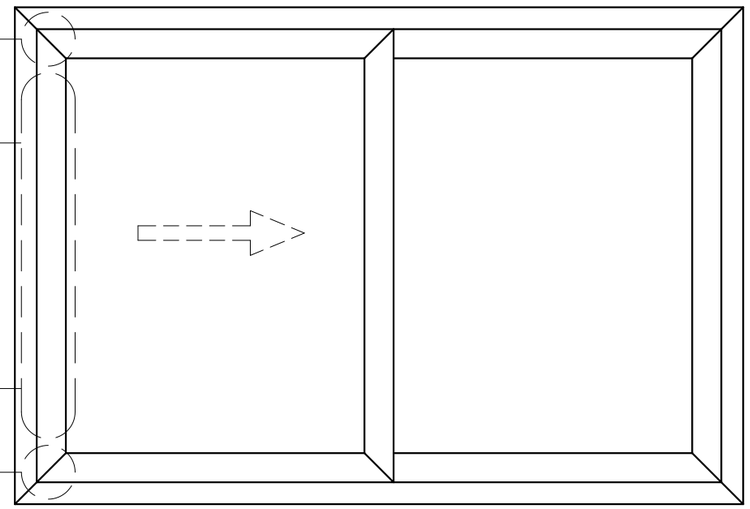

Do Not Scale From This Drawing

ACUN348 Location

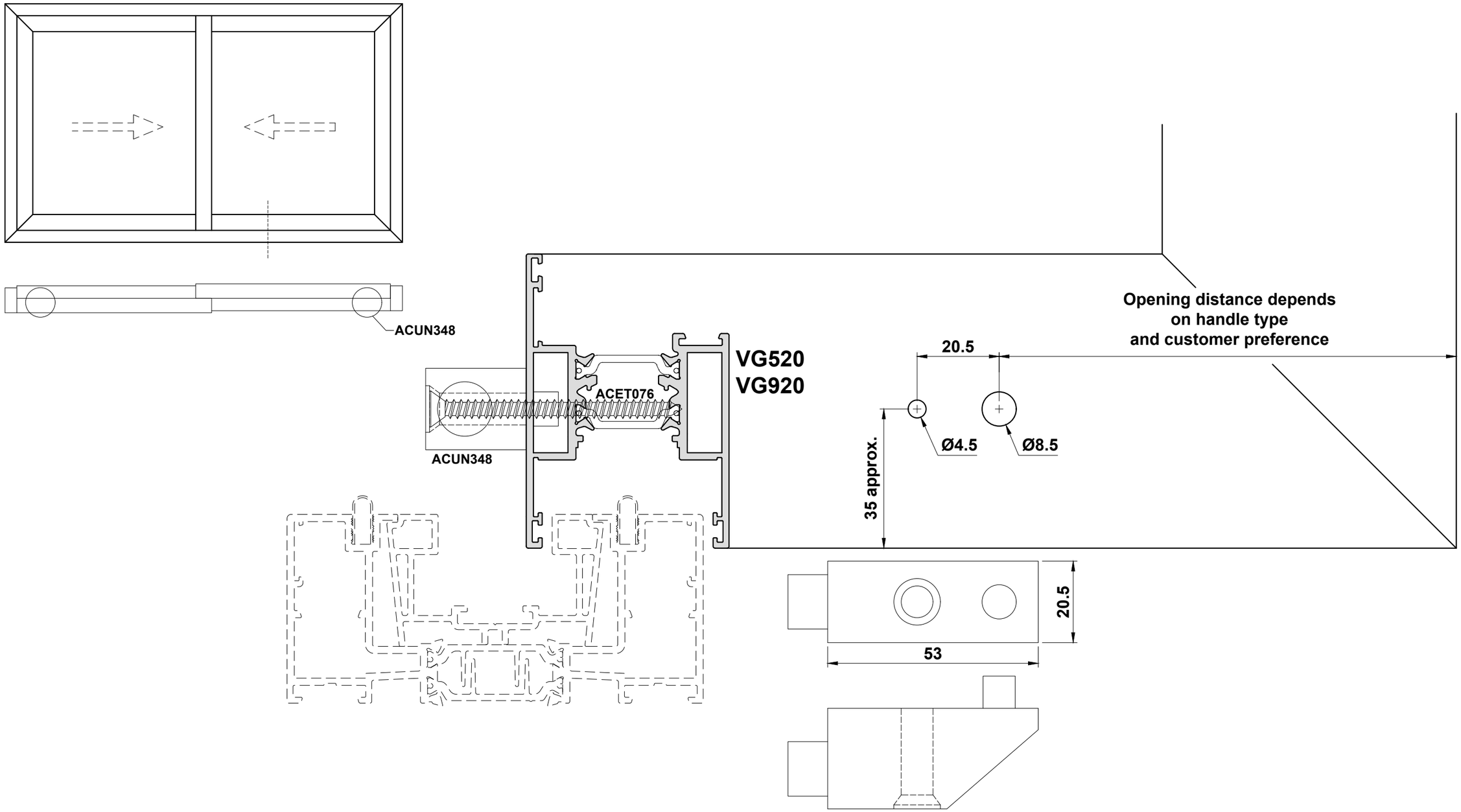

Do Not Scale From This Drawing

VG510 Corner Assembly

Please note: NOT Compatible With VG5016, VG5017, VG5018, VG5019.

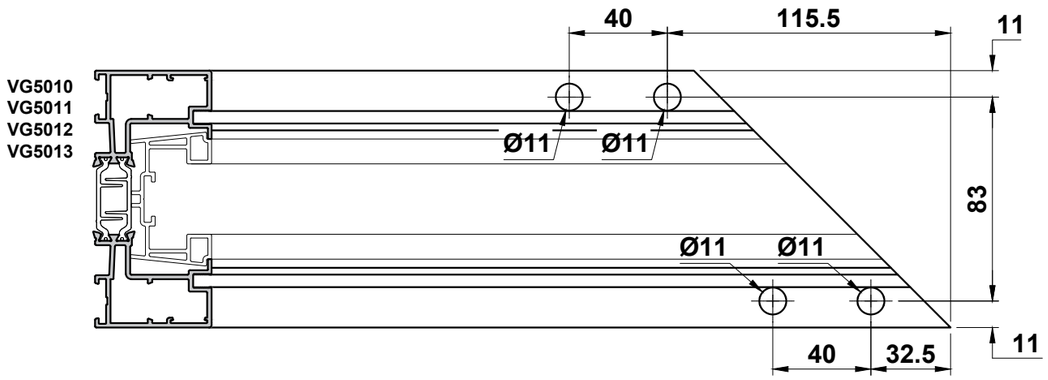

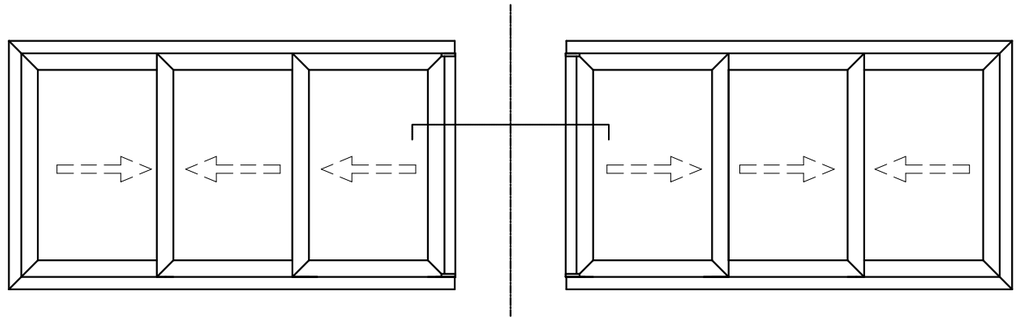

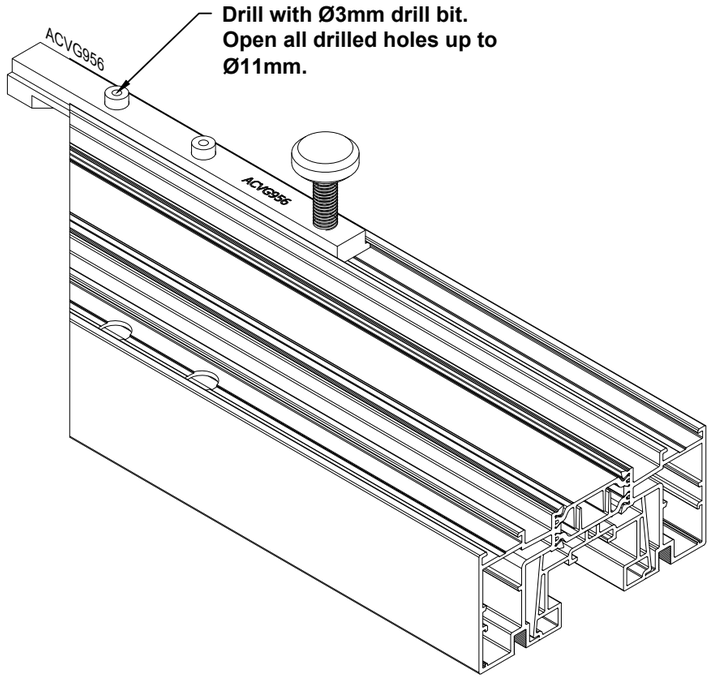

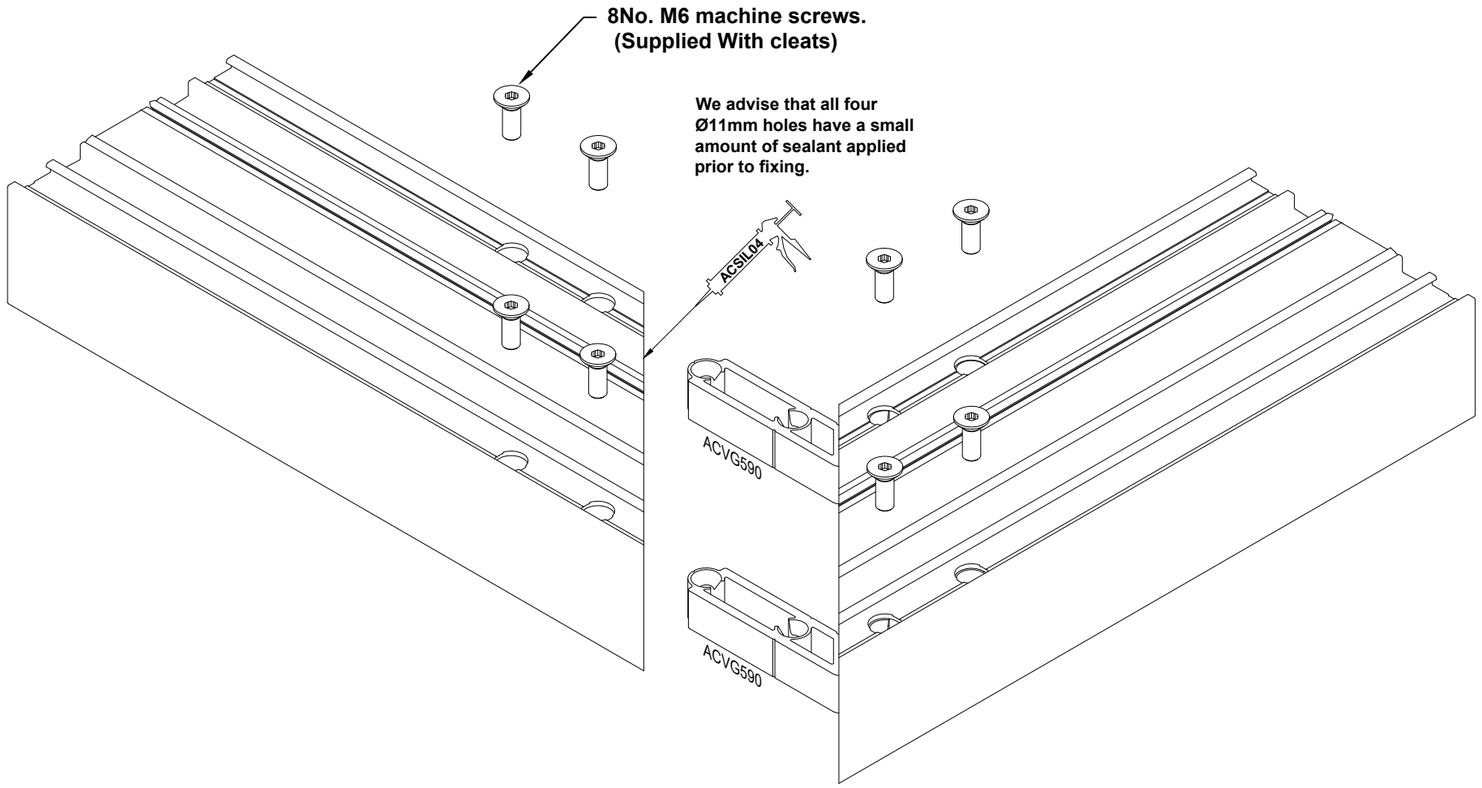

Do Not Scale From This Drawing

VG581 Shootbolt Details

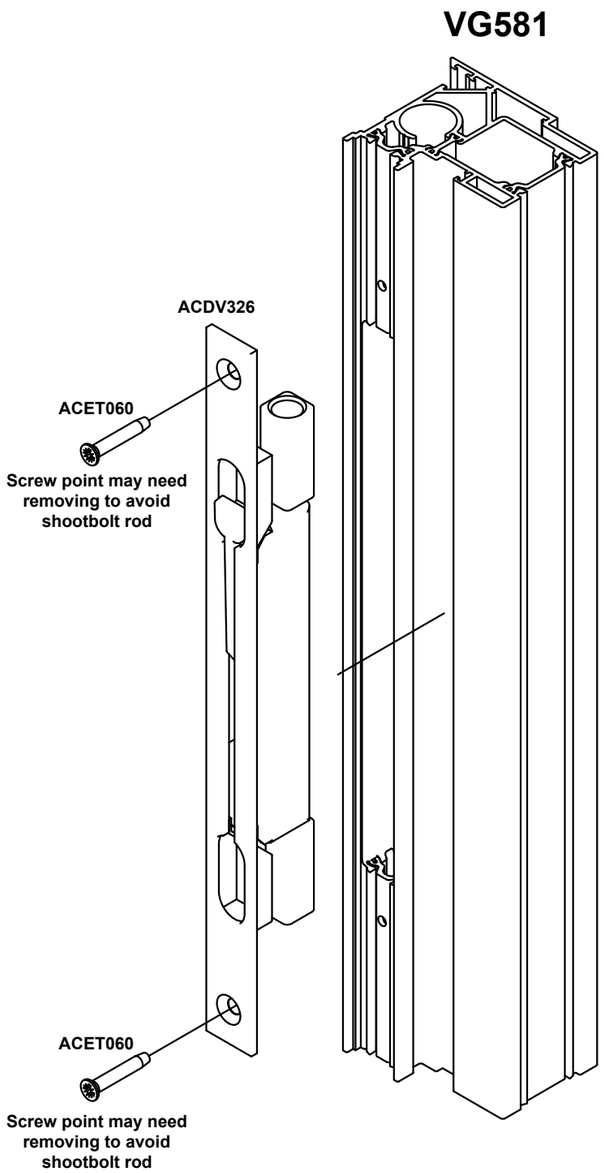

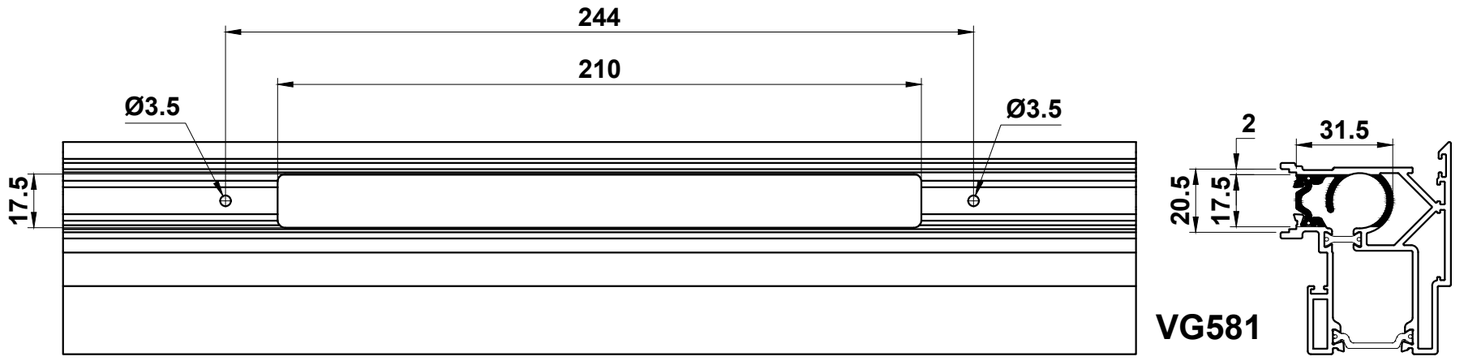

See next page for ACVL127 rod deductions

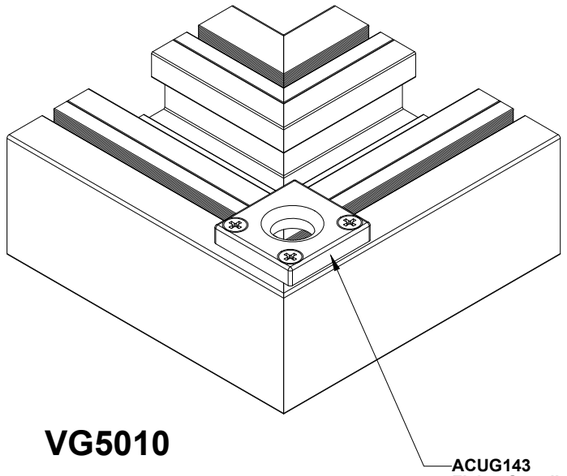

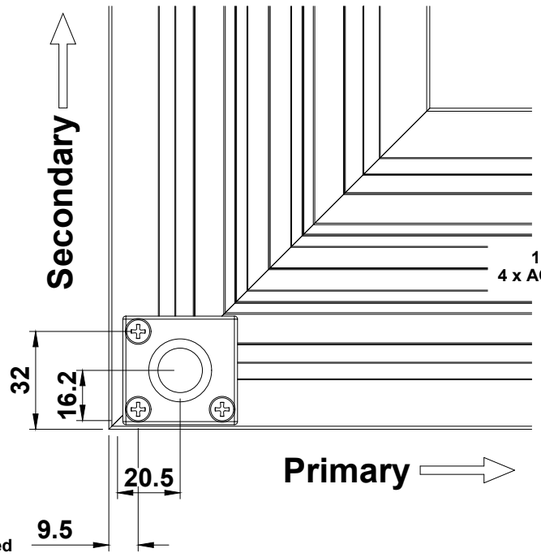

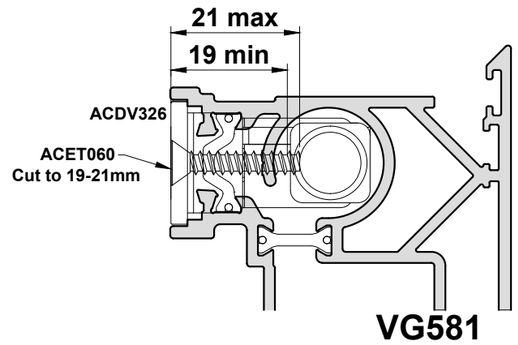

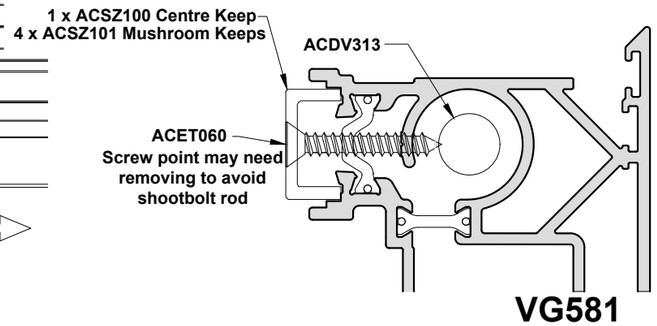

Do Not Scale From This Drawing

ACSZ015 Lock Preparation & Shootbolt Details

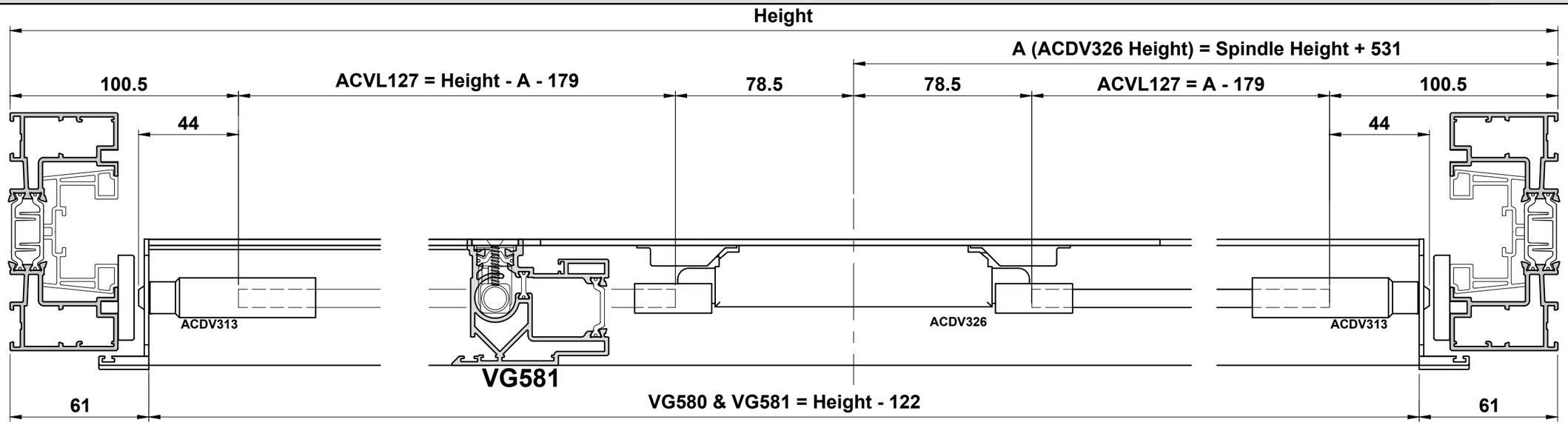

Bottom

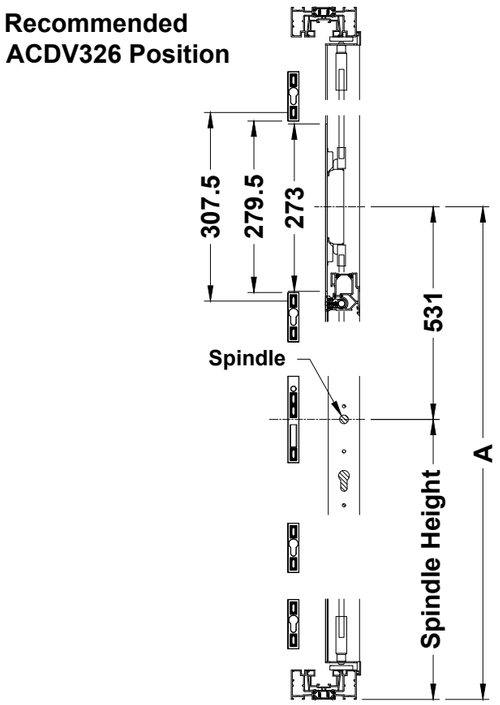

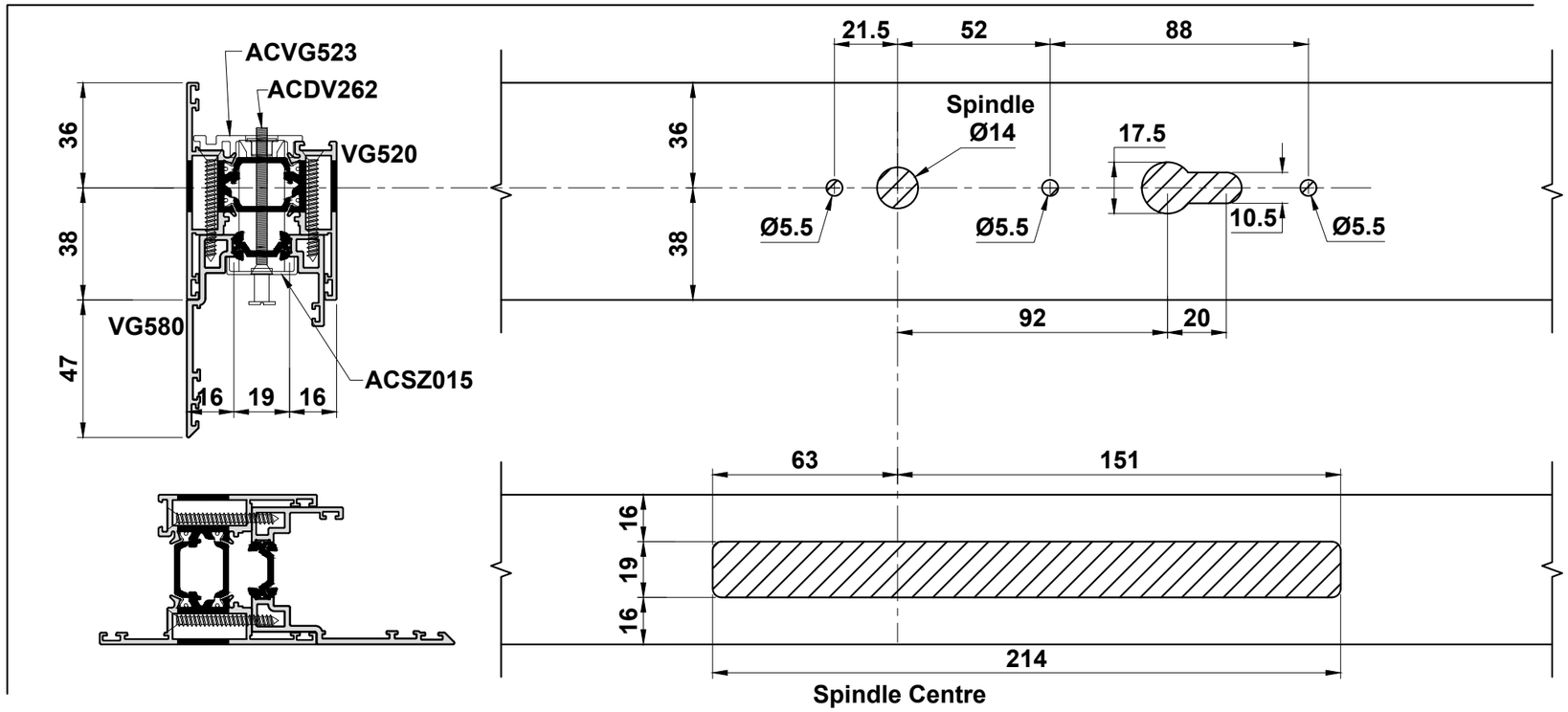

Do Not Scale From This Drawing

VG580 & VG581 Assembly

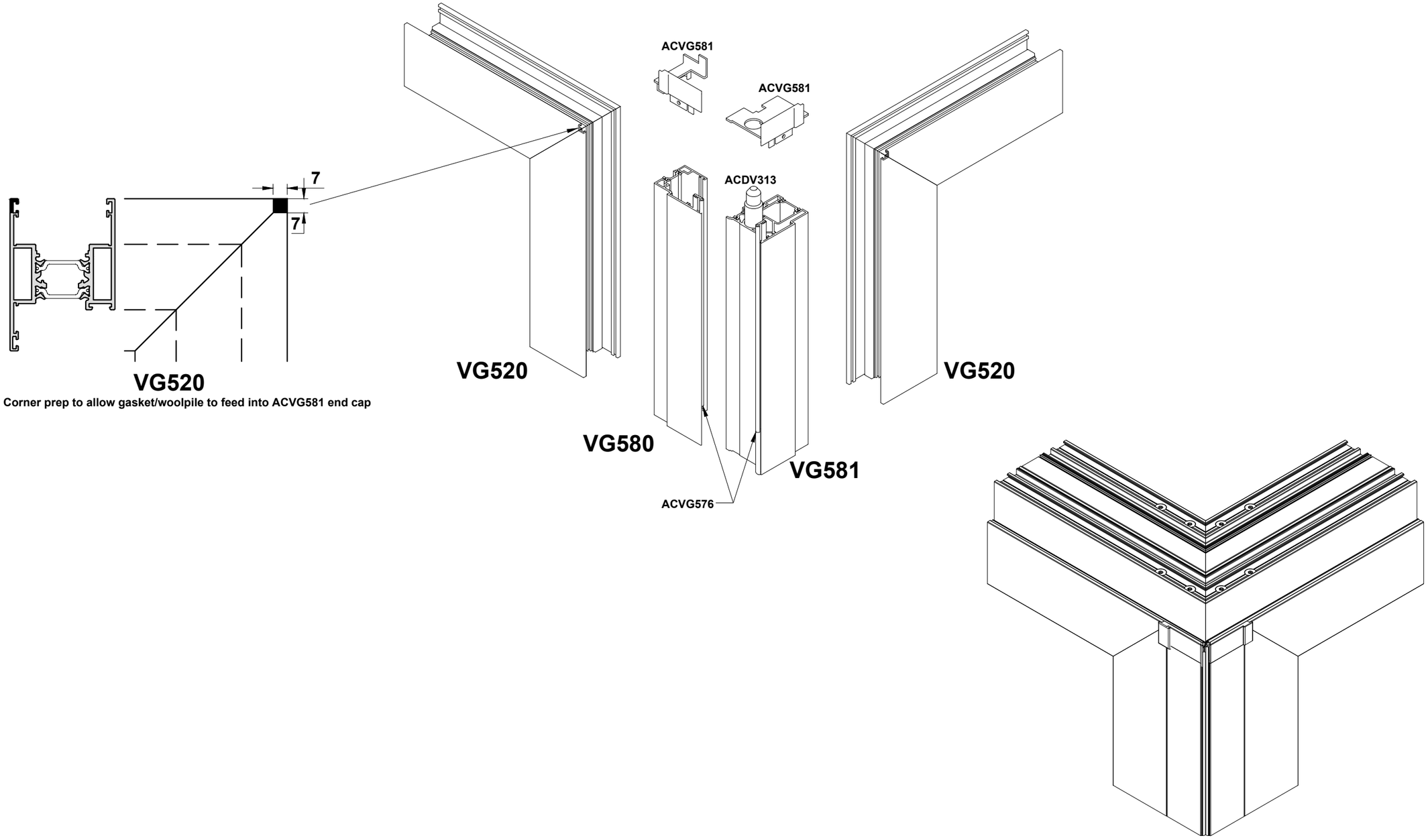

Do Not Scale From This Drawing

Section F

Sawing Tables

Section F

Cutting Information - 2 Pane Slide VG5023 & VG5024 Sash

IMPORTANT NOTE:

Maximum Sash Weights:
Sliding Sashes = 250kg

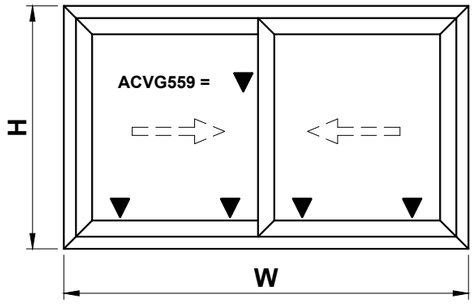

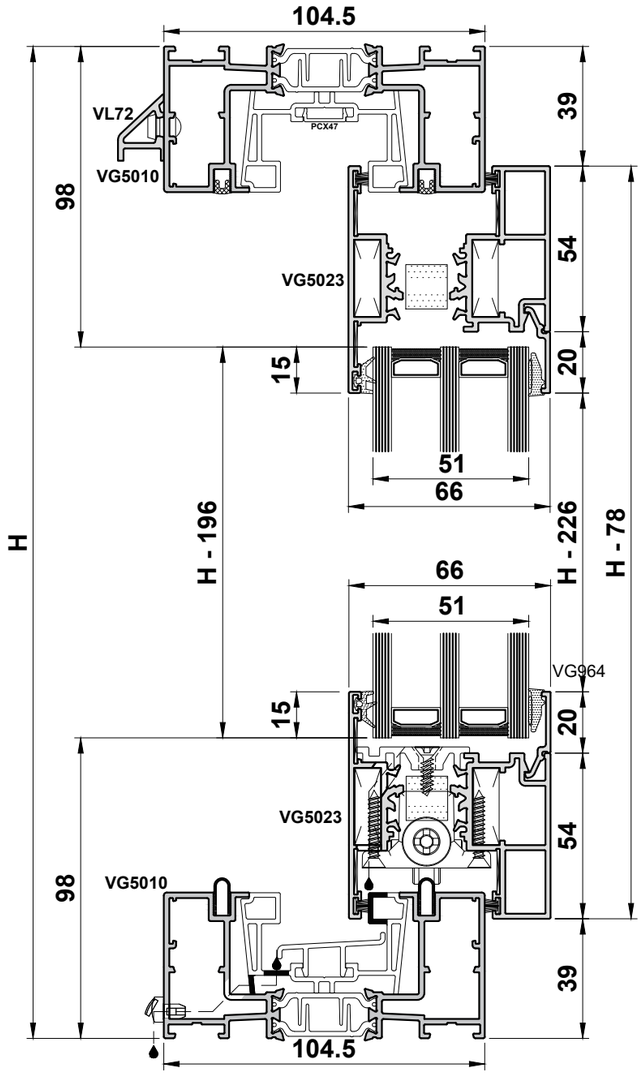

GLASS SIZE	
2x	(W÷2) - 124.5
	H - 196

PROFILES

VG5010 (with VG5050)		2		W
VG5010 (with VG5050)		2		H
VG5023		2		(W÷2) - 6.5
VG5023		2		H - 78
VG5024		2		(W÷2) - 6.5
VG5024		2		H - 78
VG530		2		H - 78
VG551R		2		H - 78
VG586		2		H - 78
BEAD		4		(W÷2) - 114.5
BEAD		4		H - 226
VG52		2		W - 95
VG52		4		H - 95
VG53		2		W - 95
VG7075		2		(W÷2) - 56.5

OPTIONAL

VL72		1		W - 9
VG5074		1		(W÷2) - 89
VG5014		1		(W÷2) - 89
VG5014		2		H - 98

ACCESSORIES

ACGSL045	MAX 600 mm	Drainage Cap
ACVG5023	12	Sash Cleat
ACVG5024	4	Sash Cleat
ACVG5032	2	Interlock Plug
ACUN348	4	Buffer
ACVG5010	8	Outer Frame Cleats
ACVG920	32	Chevron
ACVG523	26	Lock Fixing Plates
ACVG529	1 Set of 4	Anti Lift Block/Guide
ACVG530	2 Pairs	Interlock Cover Cap
ACVG555	4	Adjustable Rollers
ACVG559	4	Bridge Packer
ACVS033	4H	Woolpile
ACUN3215	8H + 4W	Woolpile
Ext. Glazing Gasket	4H + 2W - 1300	'E' Gasket
Int. Glazing Gasket	4H + 2W - 1300	Wedge Gasket

OPTIONAL

ACVL059	1 Pair	VL72 End Cap
ACVL061	(W÷300) + 2	VL72/VL76 Rivet

*See section E for lock & handle selection

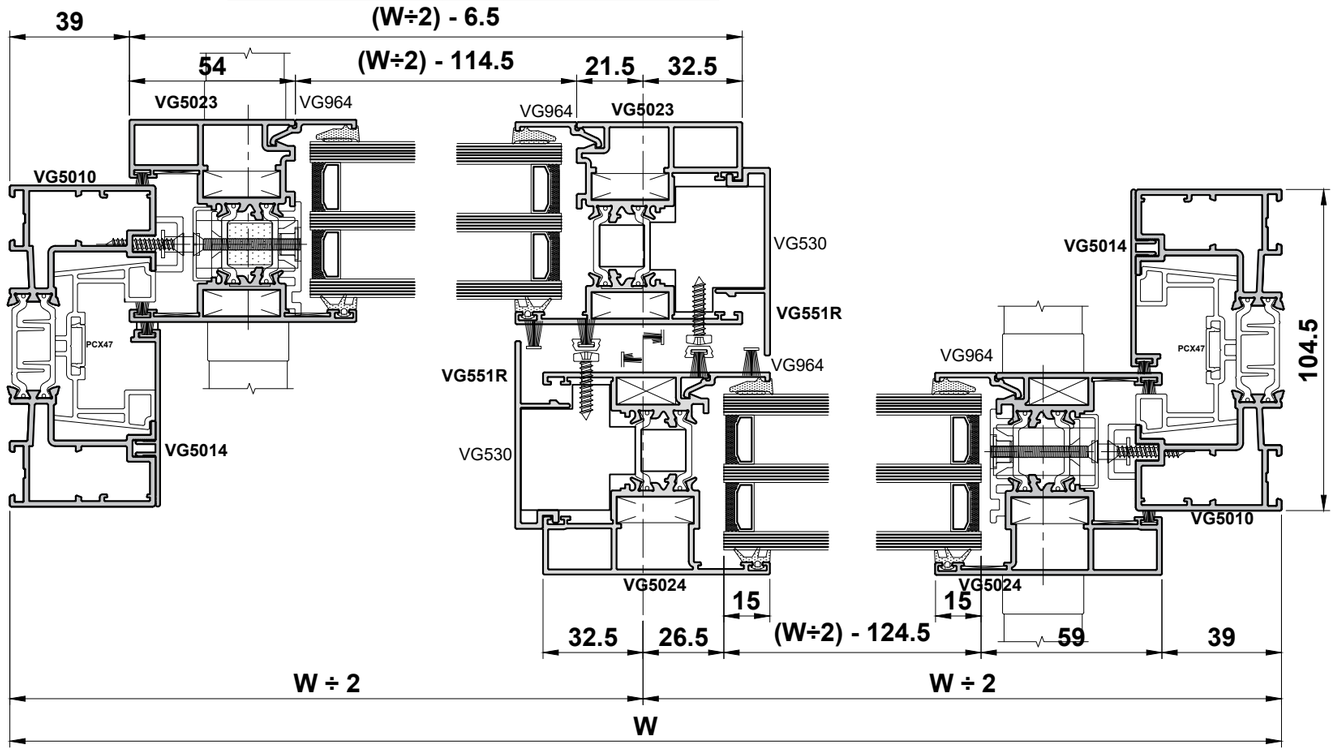

Do Not Scale From This Drawing

Cutting Information - 2 Pane Slide Standard Interlock

IMPORTANT NOTE:

Maximum Sash Weights:
Sliding Sashes = 250kg

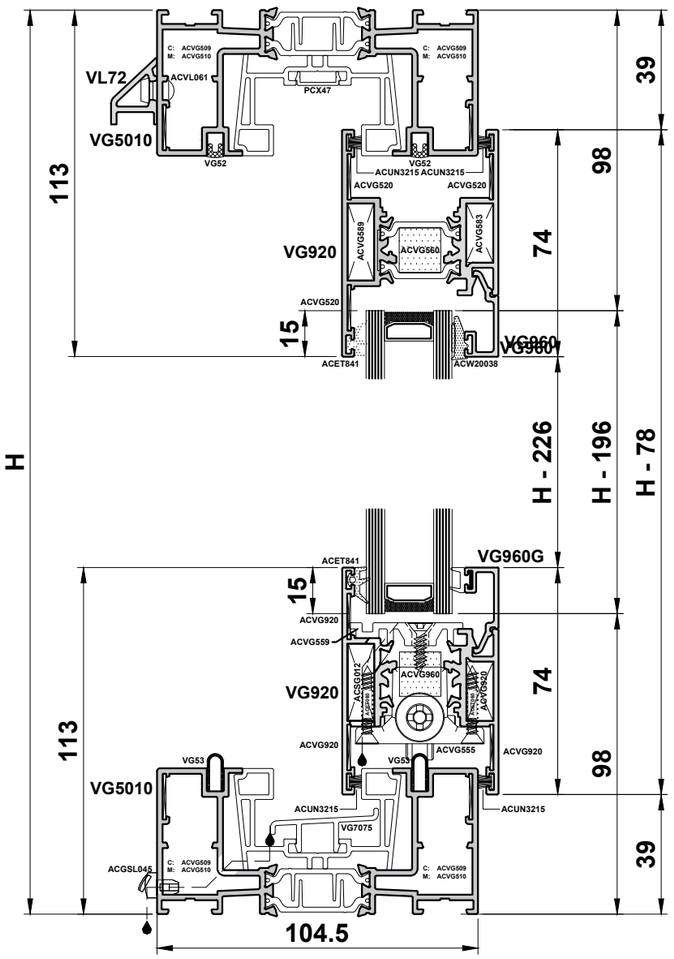

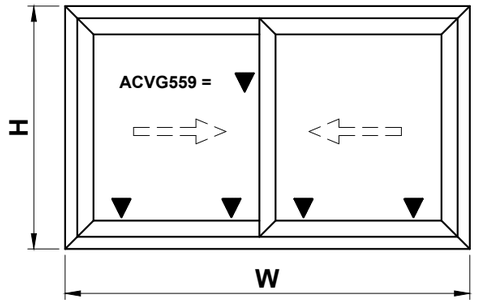

GLASS SIZE	
2x	(W÷2) - 124.5
	H - 196

PROFILES

VG5010 (with VG5050)		2		W
VG5010 (with VG5050)		2		H
VG920		4		(W÷2) - 6.5
VG920		4		H - 78
VG530		2		H - 78
VG5051		2		H - 78
VG586		2		H - 78
BEAD		4		(W÷2) - 114.5
BEAD		4		H - 226
VG52		2		W - 95
VG52		4		H - 95
VG53		2		W - 95
VG7075		2		(W÷2) - 56 .5

OPTIONAL

VL72		1		W - 9
VG5074		1		(W÷2) - 89
VG5014		1		(W÷2) - 89
VG5014		2		H - 98

ACCESSORIES

ACGSL045	MAX 600 mm	Drainage Cap
ACVG589	16	Sash Cleat
ACVG5032	2	Interlock Plug
ACUN348	4	Buffer
ACVG5010	8	Outer Frame Cleats
ACVG920	32	Chevron
ACVG523	26	Lock Fixing Plates
ACVG529	1 Set of 4	Anti Lift Block/Guide
ACVG530	2 Pairs	Interlock Cover Cap
ACVG555	4	Adjustable Rollers
ACVG559	4	Bridge Packer
ACVS033	4H	Woolpile
ACUN3215	8H + 4W	Woolpile
Ext. Glazing Gasket	4H + 2W - 1300	'E' Gasket
Int. Glazing Gasket	4H + 2W - 1300	Wedge Gasket

OPTIONAL

ACVL059	1 Pair	VL72 End Cap
ACVL061	(W÷300) + 2	VL72/VL76 Rivet

*See section E for lock & handle selection

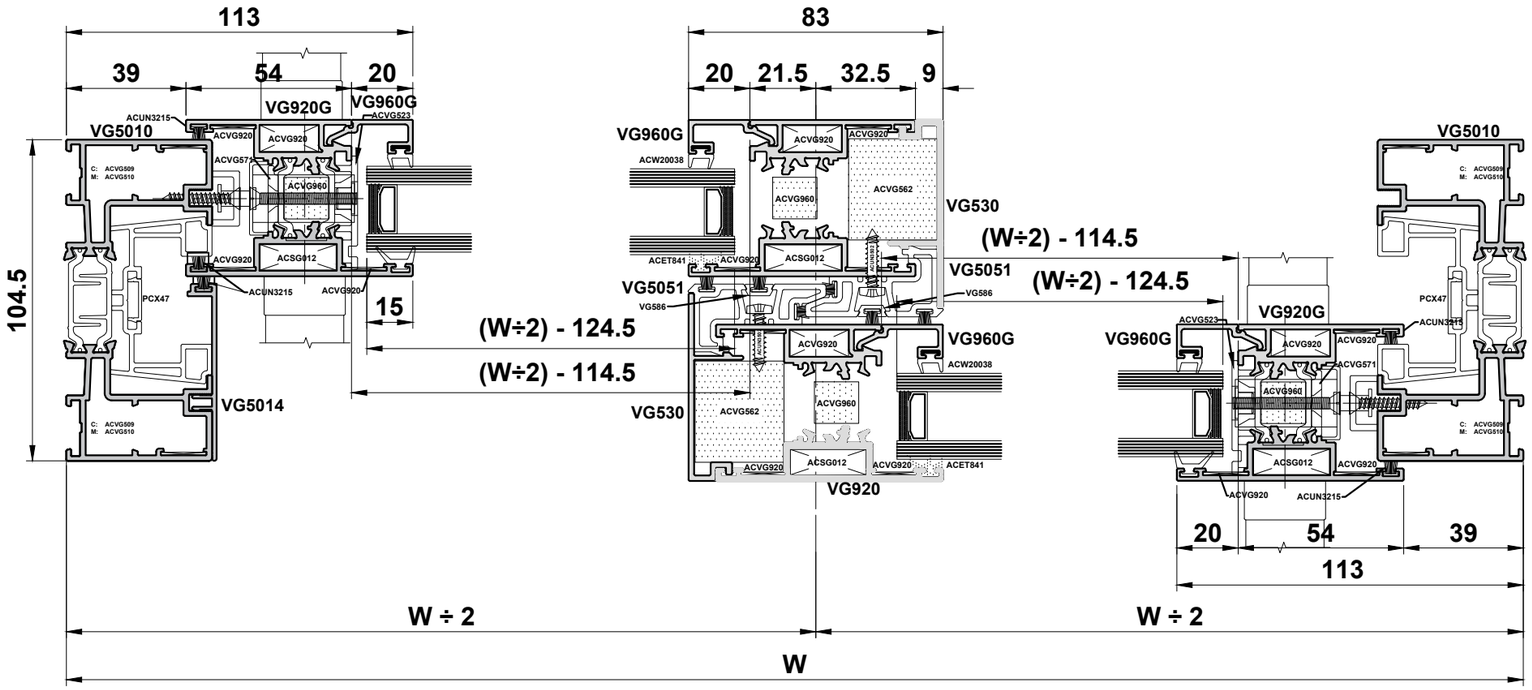

Do Not Scale From This Drawing

Cutting Information - 2 Pane Slide Standard Interlock HYB

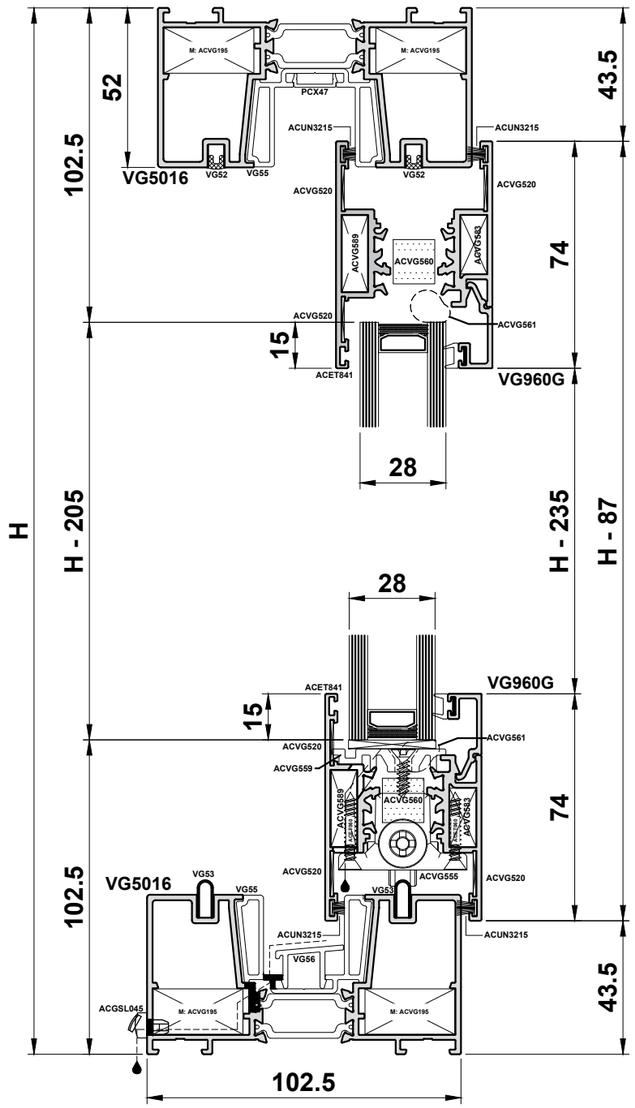

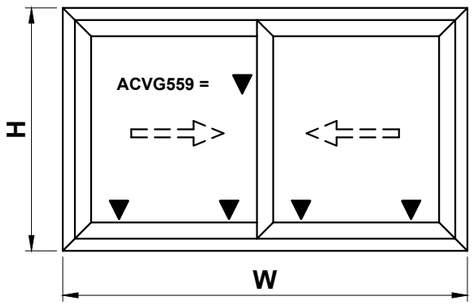

IMPORTANT NOTE:

Maximum Sash Weights:
Sliding Sashes = 250kg

PROFILES

VG5016 (with VG55)		2		W
VG5016 (with VG55)		2		H
VG920		4		W/2 - 11
VG920		4		H - 87
VG5036		2		H - 87
VG51		2		H - 87
BEAD		4		W/2 - 119
BEAD		4		H - 235
VG52		2		W - 104
VG52		4		H - 104
VG53		2		W - 94
VG56		2		W/2 - 89

GLASS SIZE	
2x	W/2 - 129
	H - 205

ACCESSORIES

ACGSL045	MAX 600 mm	Drainage Cap
ACVG583	8	Sash Cleat
ACVG589	8	Sash Cleat
ACVG30	2	Interlock Seal
ACUN348	4	Buffer
ACVG195	8	Outer Frame Cleats
ACVG520	24	Chevron
ACVG523	26	Lock Fixing Plates
ACVG528	8+	Sash Top Guide
ACVG529	1 Set of 4	Anti Lift Block/Guide
ACVG5030	2 Pairs	Interlock Cover Cap
ACVG555	4	Adjustable Rollers
ACVG559	4	Bridge Packer
ACUN3215	8H + 4W	Woolpile
ACVG42	2H	VG5036 Woolpile
Ext. Glazing Gasket	4H + 2W - 1300	'E' Gasket
Int. Glazing Gasket	4H + 2W - 1300	Wedge Gasket

*See section E for lock & handle selection

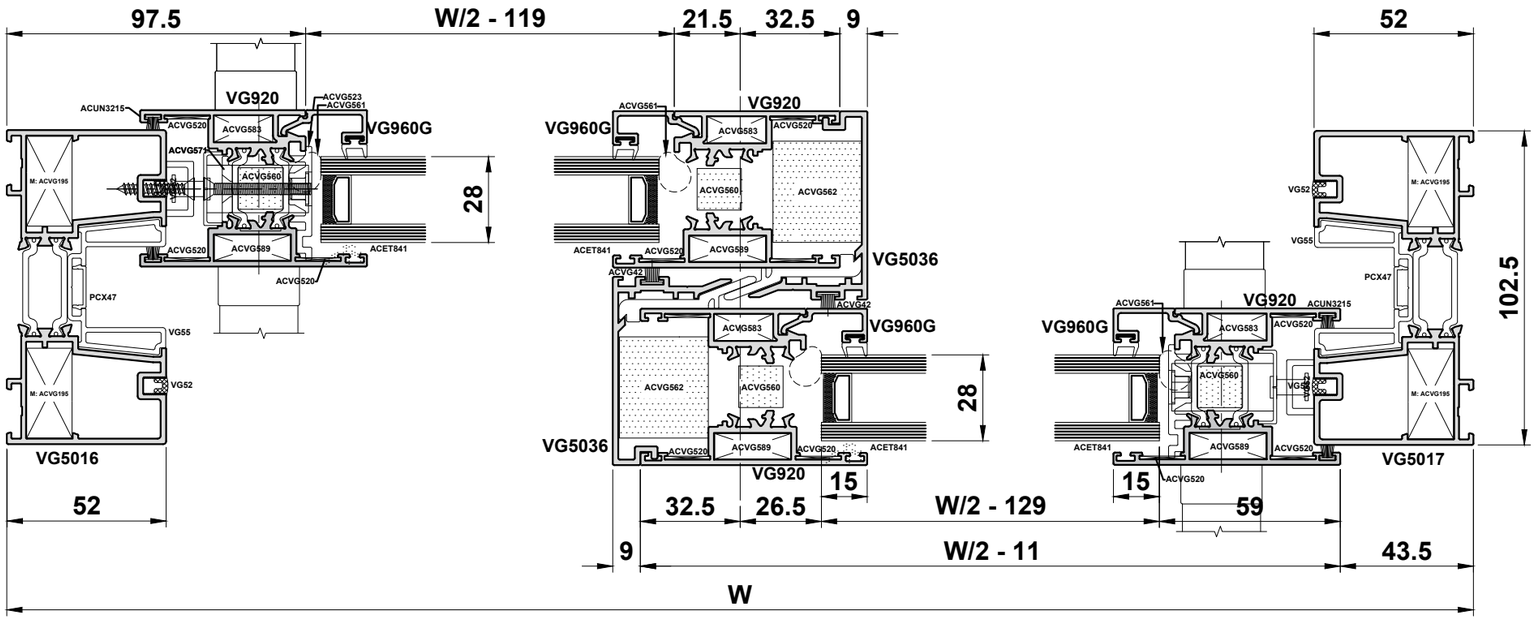

Do Not Scale From This Drawing

Cutting Information - 2 Pane Slide 20mm Interlock

IMPORTANT NOTE:

Maximum Sash Weights:
Sliding Sashes = 250kg

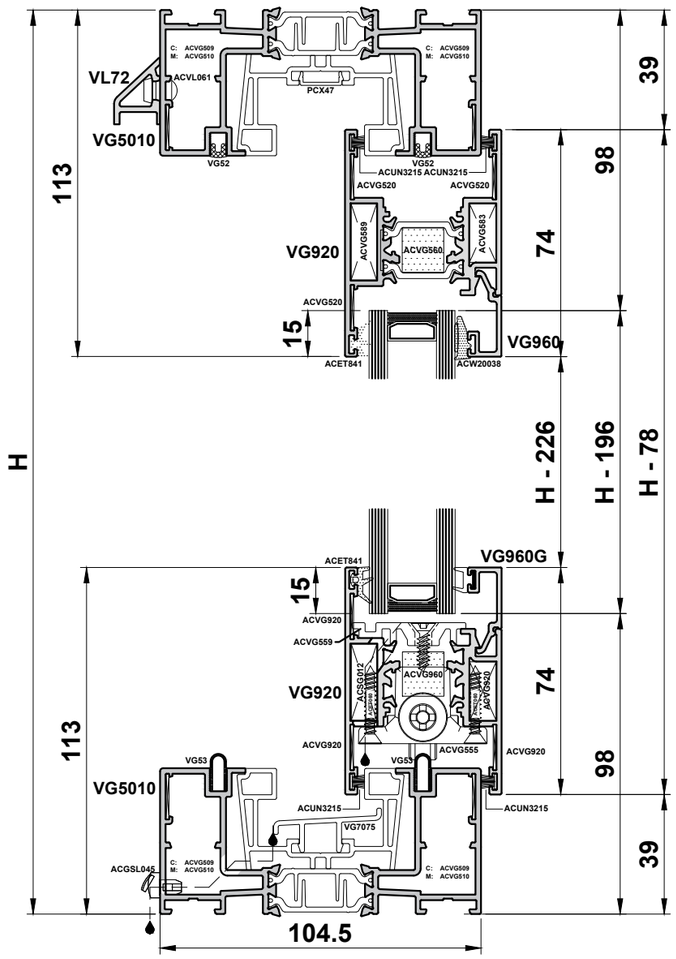

PROFILES

VG5010 (with VG5050)		2	W
VG5010 (with VG5050)		2	H
VG920		2	(W÷2) - 39
VG920		2	(W÷2) - 39
VG920		2	H - 78
BEAD		4	(W÷2) - 103
BEAD		2	H - 226
VG52		2	H - 95
VG52		2	W - 95
VG53		2	W - 95
VL72		1	W - 9
VG565/VG566*		2	H - 186
VG590		1	H - 78
VG592		1	H - 78
VG594		1	H - 226
VG596		2	H - 78
VG7075		2	(W÷2) - 56 .5

*We recommend to cut VG565/566 full height

GLASS SIZE	
2x	(W÷2) - 98
	H - 196

ACCESSORIES

ACGSL045	MAX 800 mm	Drainage Cover Cap
ACSG012	8	Vent Cleats
ACUN348	2	Stoppers
ACVG5010	8	Outer Frame Cleats
ACVG920	20	Chevrons
ACVG523	26	Fixing Plates
ACVG529	2 Sets Of 4	Anti Lift Block/Guide
ACVG540	1	VG540 End Cap
ACVG545	2	Sash Guide
ACVG547	8	Fixing Bracket
ACVG555	4	Rollers
ACVG559	4	Bridge Packer
ACVG591	4	Interlock Cover Cap Kit
ACVG5032	2**	Slim Interlock Plug
ACVG593	4	End Pad

**For PAS 24, additional 4 x ACVG5032 required
***See section E for lock & handle selection

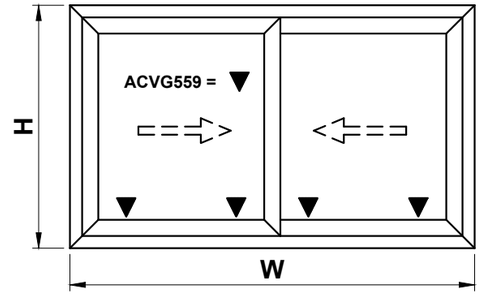

ACCESSORIES

ACVG594	2	VG590 End Cap
ACVG595	2	VG592 End Cap
ACVG597	1 Pack Of 4	Interlock Security Device
ACVL059	2	End Caps VL72
ACVL061	W/300 + 2	Rivets VL72
ACVS033	6H + 6W	Woolpile
Ext. Glazing Gasket	4H + 2W	'E' Gasket
Int. Glazing Gasket	4H + 2W	Wedge Gasket

Do Not Scale From This Drawing

Cutting Information - 2 Pane Slide 35mm Interlock

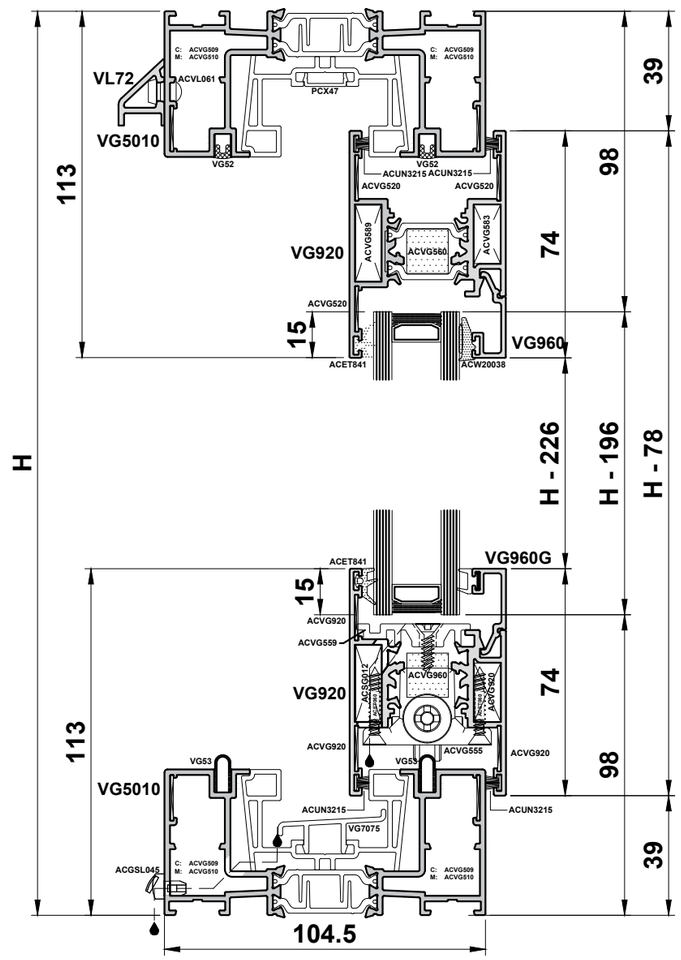

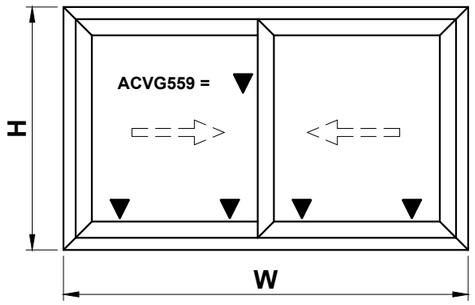

IMPORTANT NOTE:

Maximum Sash Weights:
Sliding Sashes = 250kg

PROFILES

VG5010 (with VG5050)		2		W
VG5010 (with VG5050)		2		H
VG520		2		W/2 - 44
VG520		2		W/2 - 44
VG520		2		H - 78
VG535		1		H - 78
VG536		1		H - 78
VG537		2		H - 78
VG552N		2		H - 78
BEAD		4		W/2 - 98
BEAD		2		H - 226
VG565/VG566		2		H - 226
VG7075		2		W/2 - 56.5
VG586		2		H - 78
VG52		2		W - 95
VG52		4		H - 95
VG53		2		W - 85
VL72		1		W - 9

GLASS SIZE	
2x	W/2 - 105
	H - 196

ACCESSORIES

ACGSL045	MAX 600 mm	Drainage Cap
ACSG012	8	Sash Cleat
ACVG5032	2	Interlock Seal
ACUN348	4	Buffer
ACVG510	8	Outer Frame Cleats
ACVG520	20	Chevron
ACVG523	26	Lock Fixing Plates
ACVG5029	1 Set of 4	Anti Lift Block/Guide
ACVG5030	2 Pairs	Interlock Cover Cap
ACVG536	1 Pair	End Caps
ACVG5046	2	Interlock Anti-Lift Block
ACVG547	8	Fixing Bracket
ACVG555	4	Adjustable Rollers
ACVG559	4	Bridge Packer
ACVL059	1 Pair	VL72 End Cap
ACVL061	W/300+2	VL72/VL76 Rivet
ACUN3215	6H + 4W	Woolpile
Ext. Glazing Gasket	4H + 2W - 1300	'E' Gasket
Int. Glazing Gasket	4H + 2W - 1300	Wedge Gasket

*See section E for lock & handle selection

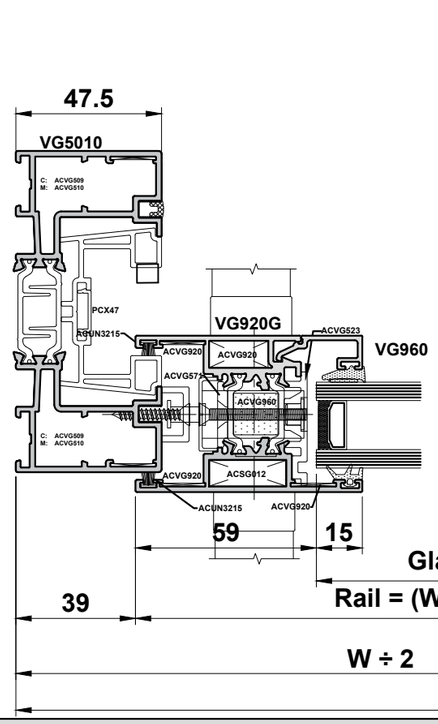

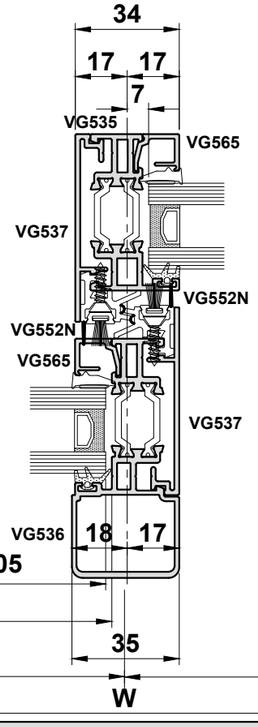

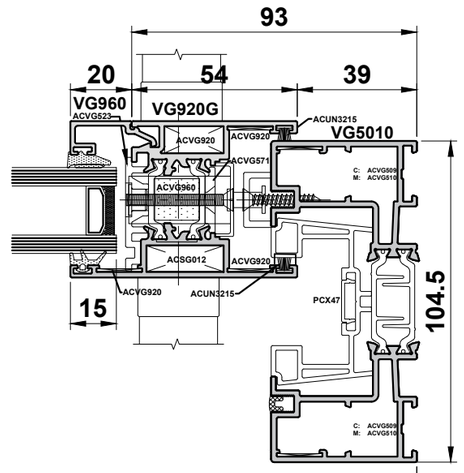

Do Not Scale From This Drawing

Cutting Information - 2 Pane Slide 35mm Interlock HYB

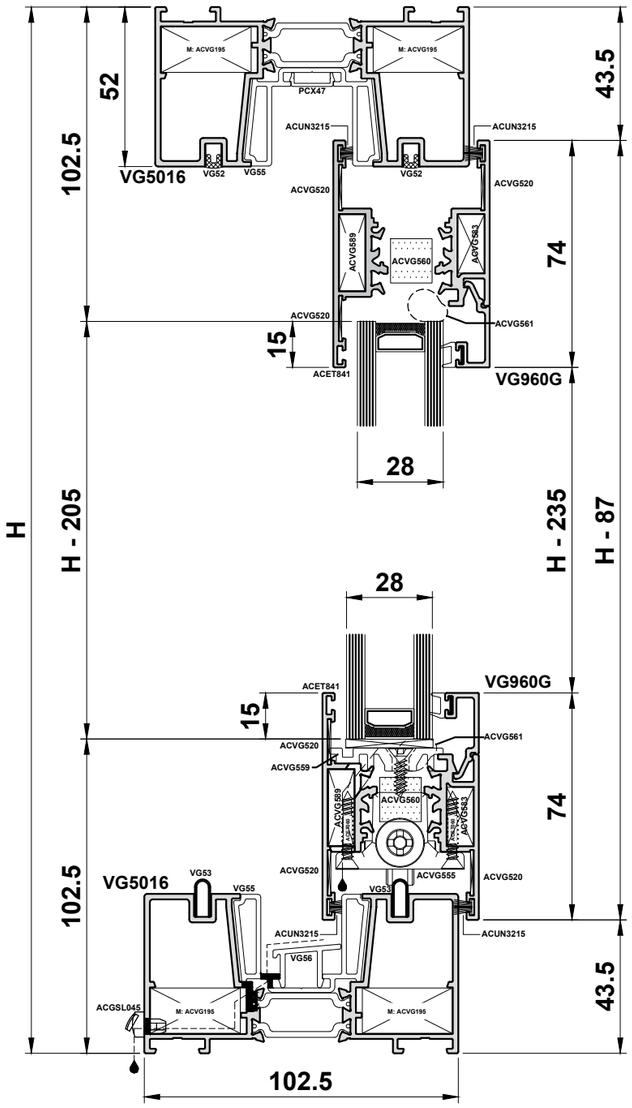

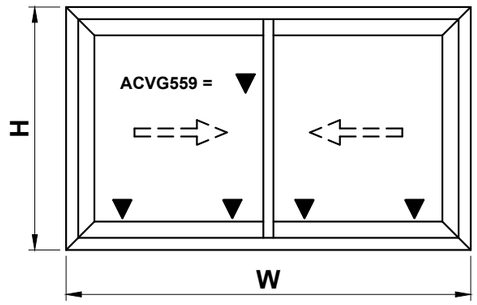

IMPORTANT NOTE:

Maximum Sash Weights:
Sliding Sashes = 250kg

GLASS SIZE	
2x	W/2 - 109.5
	H - 205

PROFILES

VG5016 (with VG55)		2		W
VG5016 (with VG55)		2		H
VG920		2		W/2 - 48.5
VG920		2		W/2 -48.5
VG920		2		H - 87
VG534		1		H - 87
VG536		1		H - 87
VG537		2		H - 87
VG5052		2		H - 87
VG586		2		H - 87
BEAD		4		W/2 - 102.5
BEAD		4		H - 235
VG565		2		H -235
VG52		2		W - 104
VG52		4		H - 104
VG53		2		W - 94
VG56		2		W/2 - 89

ACCESSORIES

ACGSL045	MAX 600 mm	Drainage Cap
ACVG583	4	Sash Cleat
ACVG589	4	Sash Cleat
ACVG586	4	Interlock Fixing
ACVG30	2	Interlock Seal
ACUN348	4	Buffer
ACVG195	8	Outer Frame Cleats
ACVG520	12	Chevron
ACVG523	26	Lock Fixing Plates
ACVG528	8+	Sash Top Guide
ACVG529	1 Set of 4	Anti Lift Block/Guide
ACVG535	2 Pairs	Interlock Cover Cap
ACVG555	4	Adjustable Rollers
ACVG559	4	Bridge Packer
ACUN3215	4H + 4W	Woolpile
ACVG42	2H	VG5036 Woolpile
Ext. Glazing Gasket	4H + 2W - 1200	'E' Gasket
Int. Glazing Gasket	4H + 2W - 1200	Wedge Gasket

*See section E for lock & handle selection

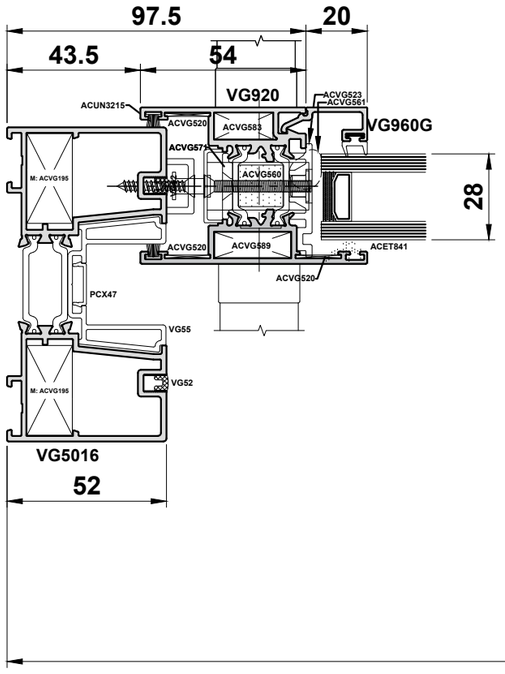

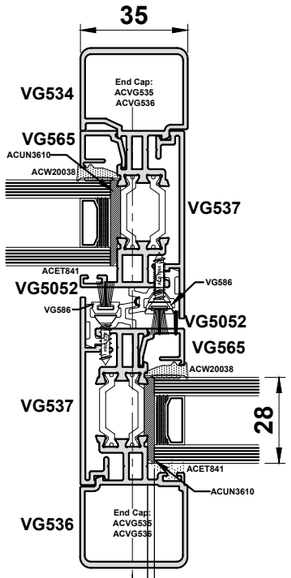

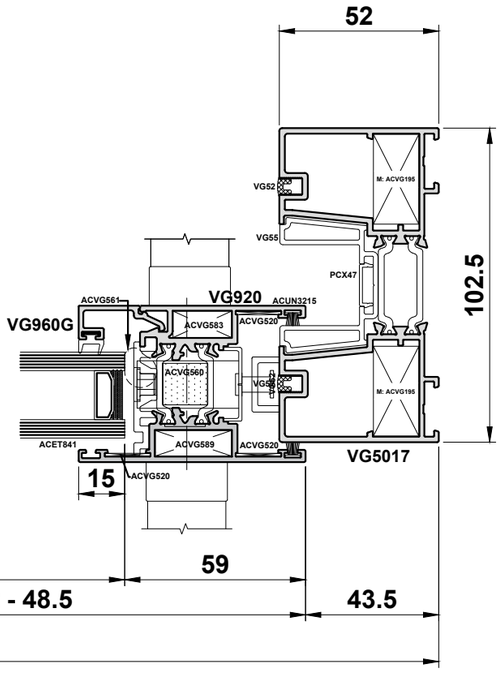

Do Not Scale From This Drawing

Cutting Information - 3 Pane Slide Standard Interlock

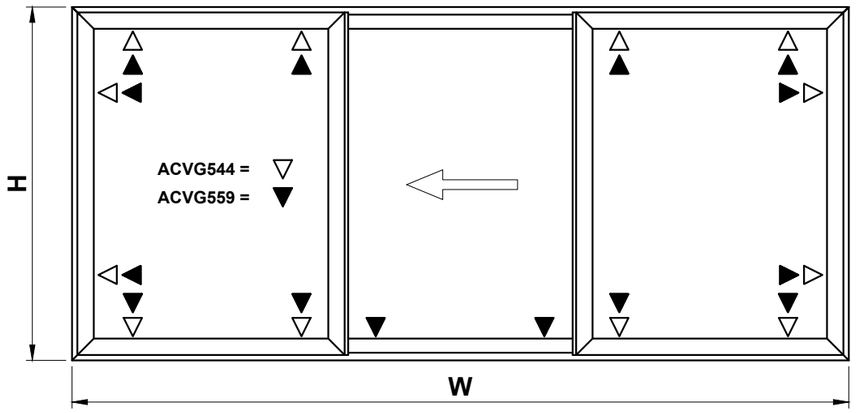

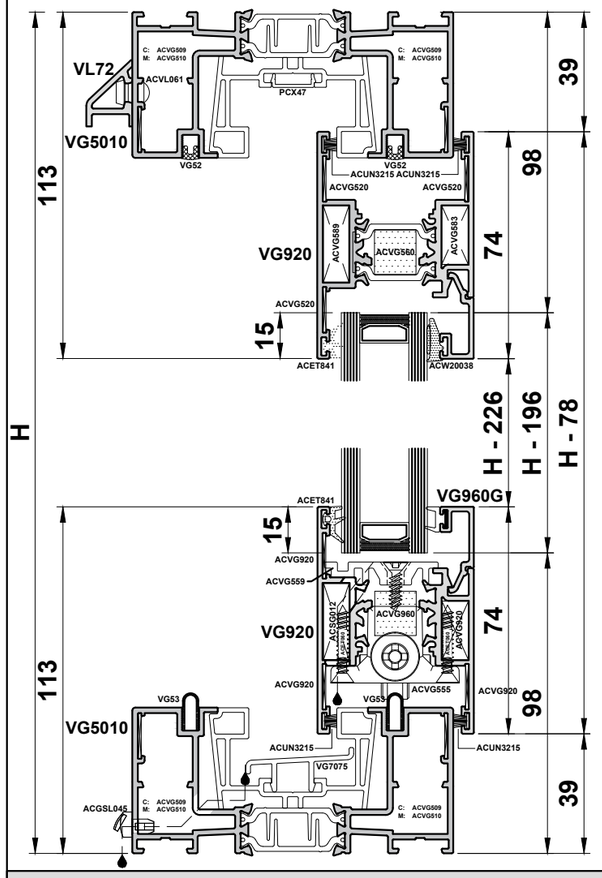

PROFILES

VG5010 (with VG5050)		2		W
VG5010 (with VG5050)		2		H
VG520		6		W/3 + 17
VG520		6		H - 78
VG530		3		H - 78
VG5051		3		H - 78
VG586		3		H - 78
VG632		1		H - 78
BEAD		6		W/3 - 91
BEAD		6		H - 226
VG53		1		W - 85
VG52		1		W - 85
VG52		2		W/3 - 65
VG52		3		H - 92
VL72		1		W - 9
VG7075		2		W/3 - 32.5
*VG5014		1		W/3 - 130.5
*VG5074		1		W/3 - 130.5

*Optional

GLASS SIZE	
3x	W/3 - 100.5
	H - 196

ACCESSORIES

ACGSL045	MAX 600 mm	Drainage Cap
ACSG012	24	Sash Cleat
ACVG5032	4	Interlock Seal
ACUN348	2	Buffer
ACVG520	44	Chevron
ACVG523	13	Lock Fixing Plates
ACVG528	4+	Sash Top Guide
ACVG5029	1 Set of 4	Anti Lift Block/Guide
ACVG5030	3 Pairs	Interlock Cover Cap
ACVG544	12	Fixed Sash Support
ACVG555	2	Adjustable Rollers
ACVG559	14	Bridge Packer
ACVG575	500 mm centres	Support for VG575
ACVG5010	8	Outer Frame Cleat
ACVL059	1 Pair	VL72 End Cap
ACVL061	W/300 + 2	VL72/VL76 Rivet
ACVS033	3H	Woolpile
ACUN3215	12H + 6W	Woolpile
Ext. Glazing Gasket	6H + 2W - 1300	'E' Gasket
Int. Glazing Gasket	6H + 2W - 1300	Wedge Gasket

*See section E for lock & handle selection

IMPORTANT NOTE:

Maximum Sash Weights:
Sliding Sashes = 250kg

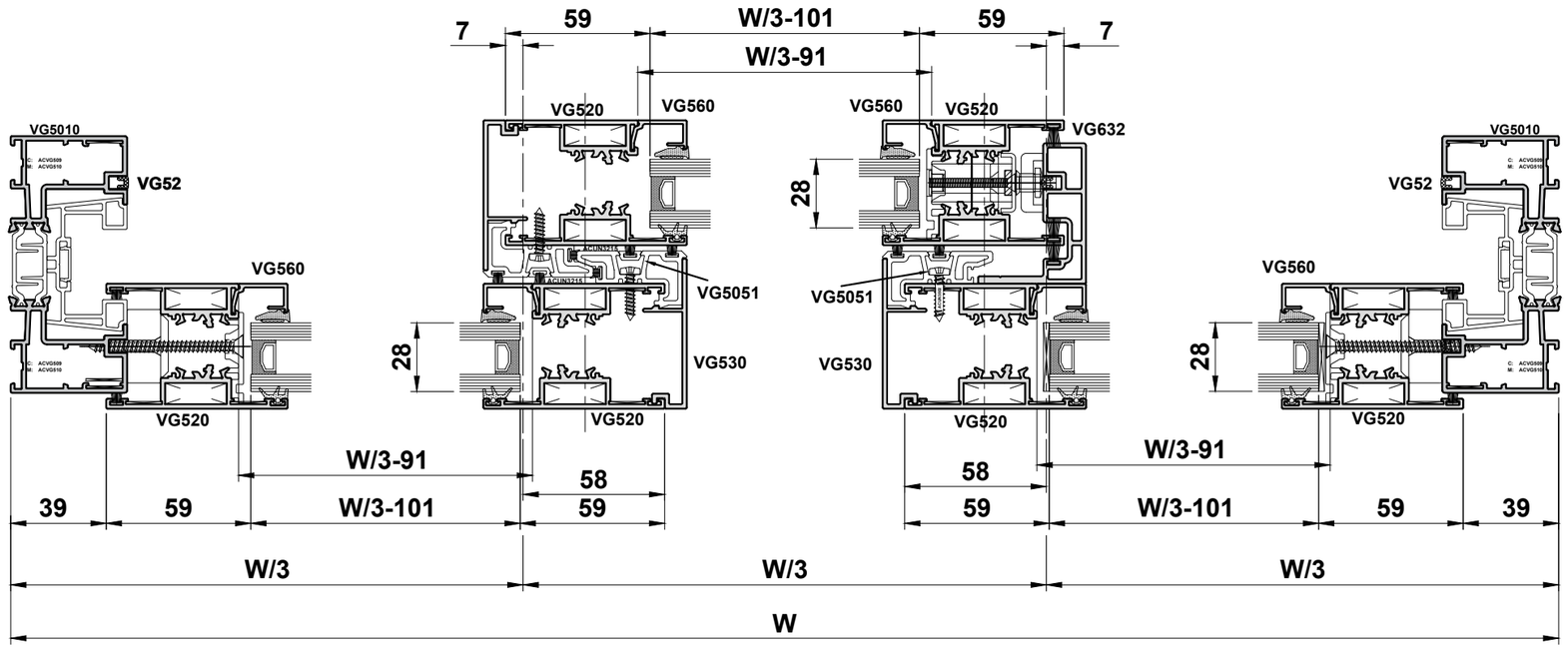

Do Not Scale From This Drawing

Cutting Information - 3 Pane 3 Track Slide Standard Interlock

IMPORTANT NOTE:

Maximum Sash Weights:
Sliding Sashes = 250kg

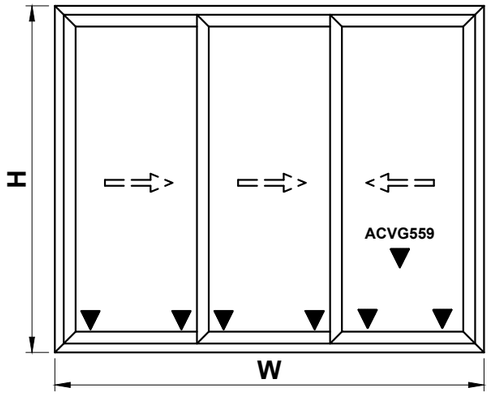

PROFILES

VG5012 (with VG5050)		2		W
VG5012 (with VG5050)		2		H
VG5079		1		W
VG920		6		(W÷3) + 17.5
VG920		6		H - 78
VG530		4		H - 78
VG5051		4		H - 78
VG586		4		H - 78
BEAD		6		(W÷3) - 90.5
BEAD		6		H - 226
VG52		3		W - 95
VG52		4		H - 95
VG53		3		W - 95
VG7075		2		(W÷3) - 32 .5
VG7075		2		(W÷3) X2 - 80.5
VL72		1		W - 9

ACCESSORIES

ACGSL045	MAX 600 mm	Drainage Cap
ACSG012	24	Sash Cleat
ACVG5032	4	Interlock Seal
ACUN348	6	Buffer
ACVG510	8	Outer Frame Cleats
ACVG920	36	Chevron
ACVG523	26	Lock Fixing Plates
ACVG5029	3 Set of 4	Anti Lift Block/Guide
ACVG5030	8	Interlock Cover Cap
ACVG555	6	Adjustable Rollers
ACVG577	1 Pair	VG577 End Cap
ACVG559	6	Bridge Packer
ACVL059	1 Pair	VL72 End Cap
ACVL061	W/300 + 2	VL72/VL76 Rivet
ACUN3215	14H + 12W	Woolpile
Ext. Glazing Gasket	6H + 2W	'E' Gasket
Int. Glazing Gasket	6H + 2W	Wedge Gasket

GLASS SIZE	
3x	(W÷3) - 101
	H - 196

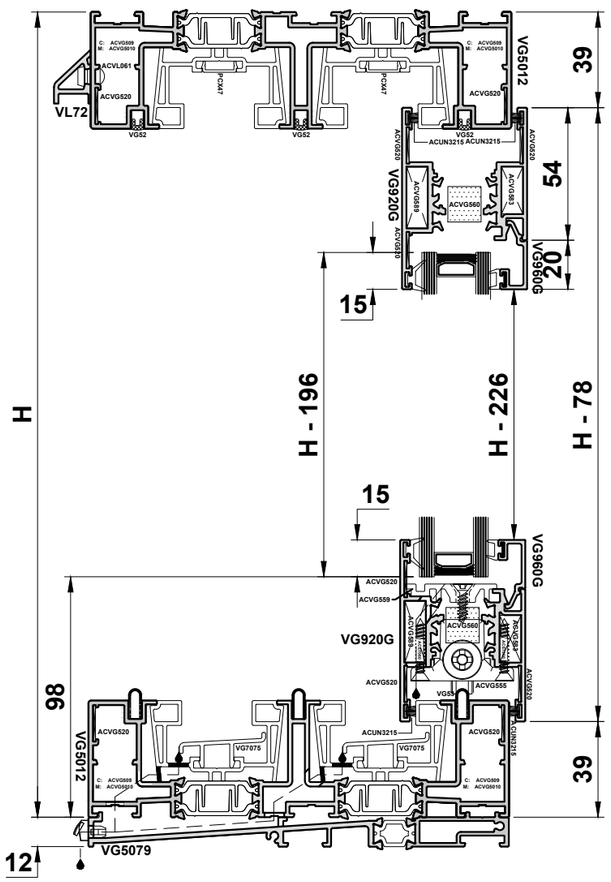

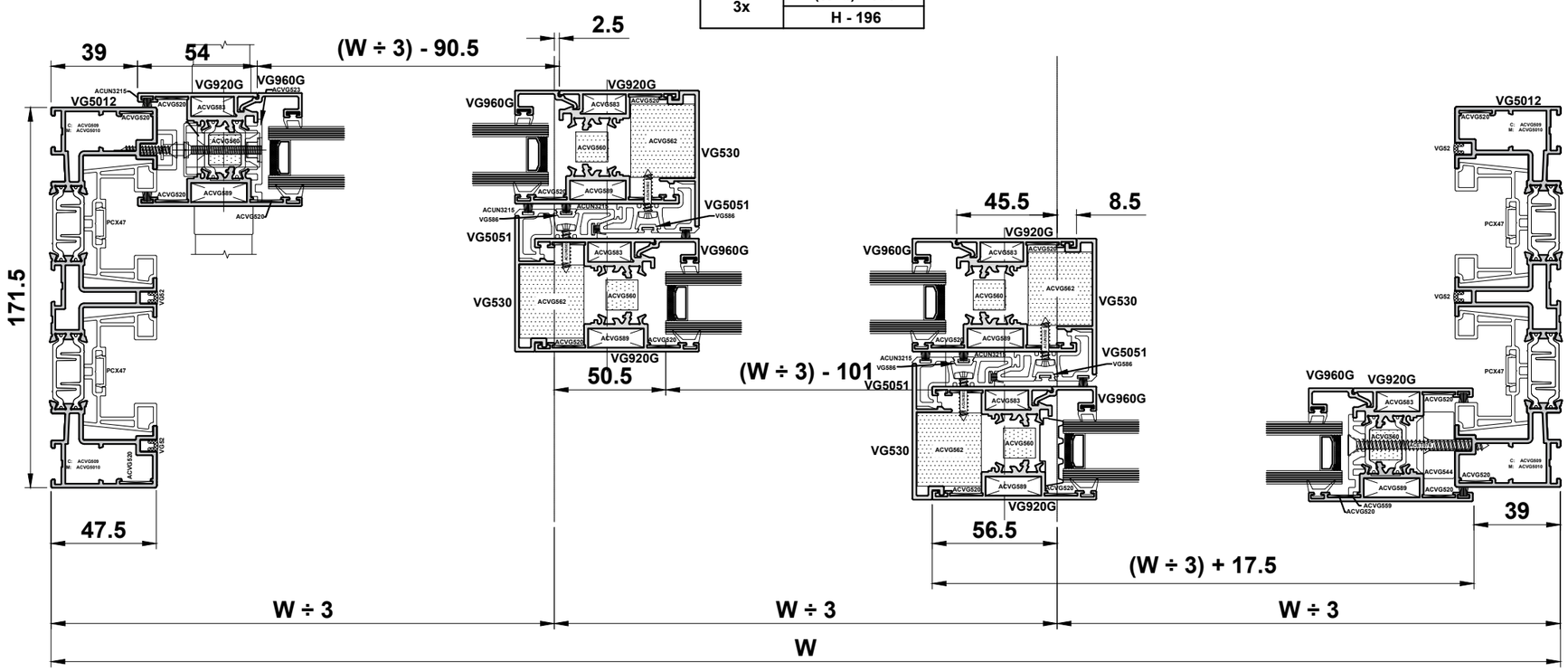

Do Not Scale From This Drawing

Cutting Information - 3 Pane 3 Track Slide Standard Interlock HYB

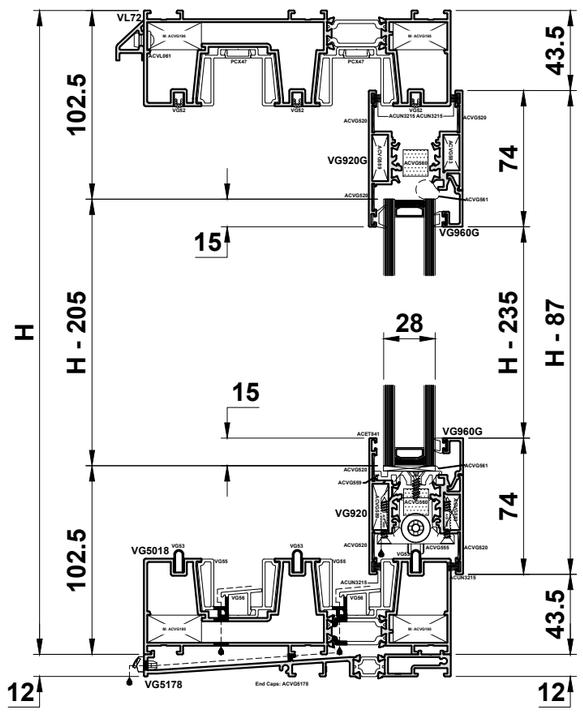

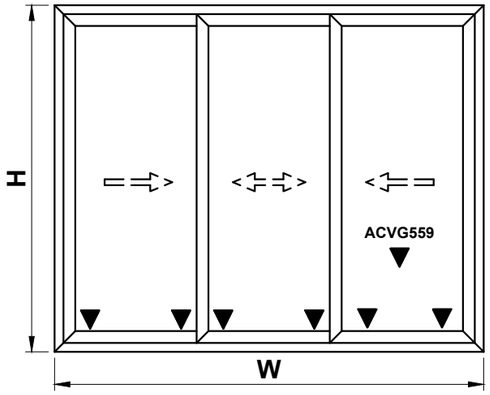

IMPORTANT NOTE:

Maximum Sash Weights:
Sliding Sashes = 250kg

PROFILES

VG5018 (with VG55)		2		H
VG5018 (with VG55)		2		W
VG920		6		W3 + 14.5
VG920		6		H - 87
VG5036		4		H - 87
VG51		4		H - 87
BEAD		6		H - 235
BEAD		6		W/3 - 93.5
VG52		4		H - 104
VG52		3		W - 104
VG53		3		W - 94
VG5178		1		W
VL72		1		W
VG56		2		W

GLASS SIZE	
3x	W/3 - 103.5
	H - 205

ACCESSORIES

ACGSL045	MAX 600 mm	Drainage Cap
ACVG583	12	Sash Cleat
ACVG589	12	Sash Cleat
ACVG30	4	Interlock Seal
ACUN348	6	Buffer
ACVG195	8	Outer Frame Cleats
ACVG520	36	Chevron
ACVG523	26	Lock Fixing Plates
ACVG528	12+	Sash Top Guide
ACVG529	2 Set of 4	Anti Lift Block/Guide
ACVG5030	4 Pairs	Interlock Cover Cap
ACVG555	6	Adjustable Rollers
ACVG5178	1 Pair	VG5178 End Cap
ACVG559	6	Bridge Packer
ACVL059	1 Pair	VL72 End Cap
ACVL061	W/300 + 2	VL72/VL76 Rivet
ACUN3215	4H + 4W	Woolpile
ACVS042	4H	Woolpile
Ext. Glazing Gasket	6H + 2W	'E' Gasket
Int. Glazing Gasket	6H + 2W	Wedge Gasket

*See section E for lock & handle selection

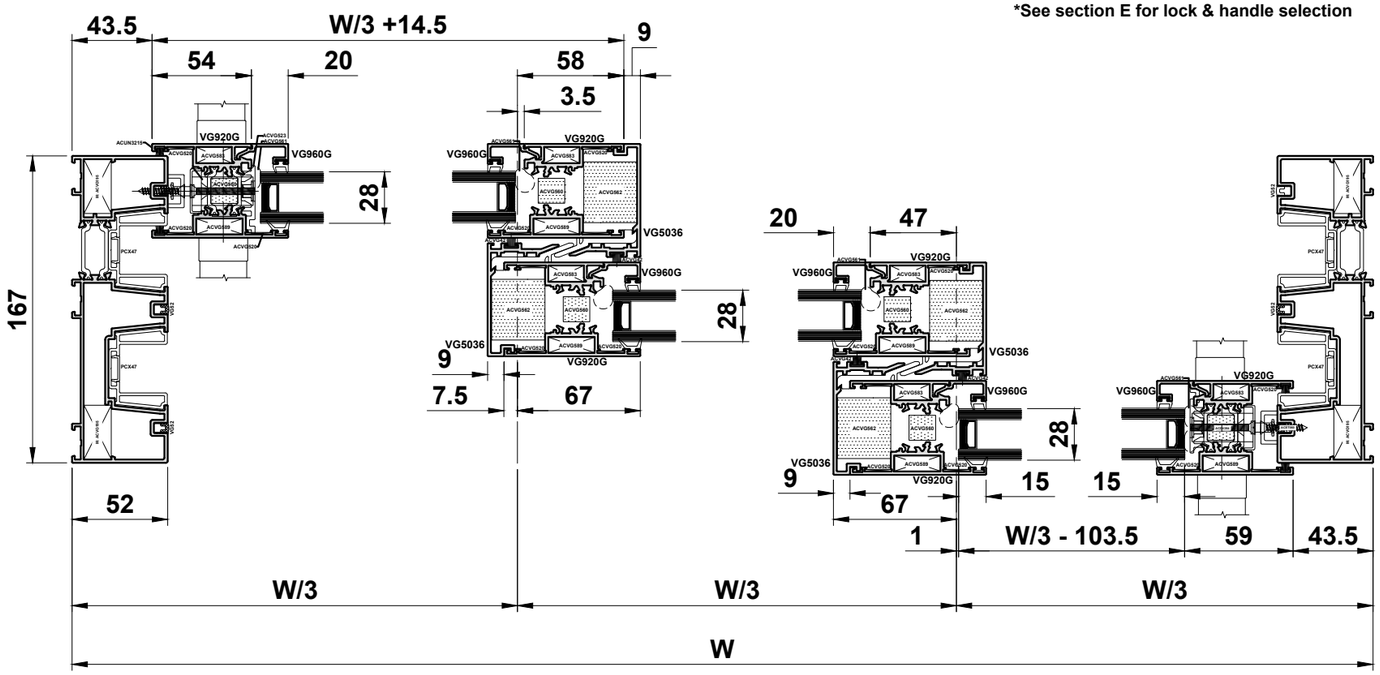

Do Not Scale From This Drawing

Cutting Information - 3 Pane Slide Standard Interlock

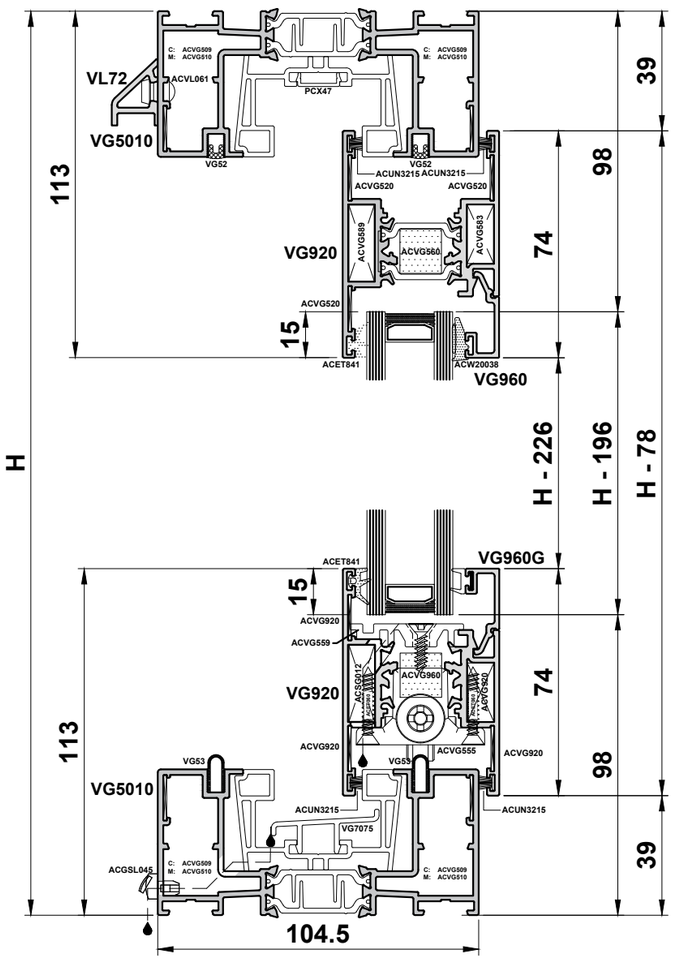

PROFILES

VG5010 (with VG5050)		2		W
VG5010 (with VG5050)		2		H
VG520		6		W/3 - 7
VG520		6		H - 78
VG5051		2		H - 78
VG586		2		H - 78
VG530		2		H - 78
VG5040		1		H - 116
BEAD		6		W/3 - 118
BEAD		6		H - 235
VG52		2		W - 104
VG52		4		H - 104
VG53		1		W - (W1 + 47)
VL72		1		W - 9
VG7075		1		W/3 - 57.5
VG7075		1		W/3 x 2 - 56.5
*VG5074		1		W - (W3 + 93.5)
*VG5014		1		W - (W3 + 93.5)
*VG5014		1		H - 98

* Optional

GLASS SIZE	
3x	W/3 - 125
	H - 196

ACCESSORIES

ACGSL045	MAX 600 mm	Drainage Cap
ACSG012	24	Sash Cleat
ACVG5032	2	Interlock Seal
ACUN348	2	Buffer
ACVG510	8	Outer Frame Cleats
ACVG520	44	Chevron
ACVG523	26	Lock Fixing Plates
ACVG5029	1 Set of 4	Anti Lift Block/Guide
ACVG5030	2 Pairs	Interlock Cover Cap
ACVG5040	1	VG540 End Cap
ACVG544	12	Fixed Sash Support
ACVG555	2	Adjustable Rollers
ACVG559	14	Bridge Packer
ACVG571	4	Lock Fixing Support
ACVG580	1	Fixation Plate
ACVG81	1	Fixation Plate
ACVL059	1 Pair	VL72 End Cap
ACVL061	W/300 + 2	VL72/VL76 Rivet
ACVS033	2H	Woolpile
ACUN3215	11H + 6W	Woolpile
Ext. Glazing Gasket	6H + 2W - 1100	'E' Gasket
Int. Glazing Gasket	6H + 2W - 1100	Wedge Gasket

*See section E for lock & handle selection

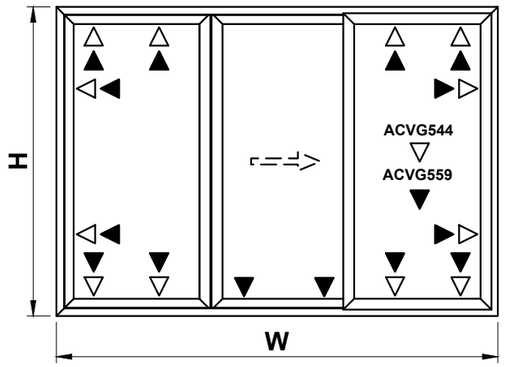

IMPORTANT NOTE:

Maximum Sash Weights:
Sliding Sashes = 250kg

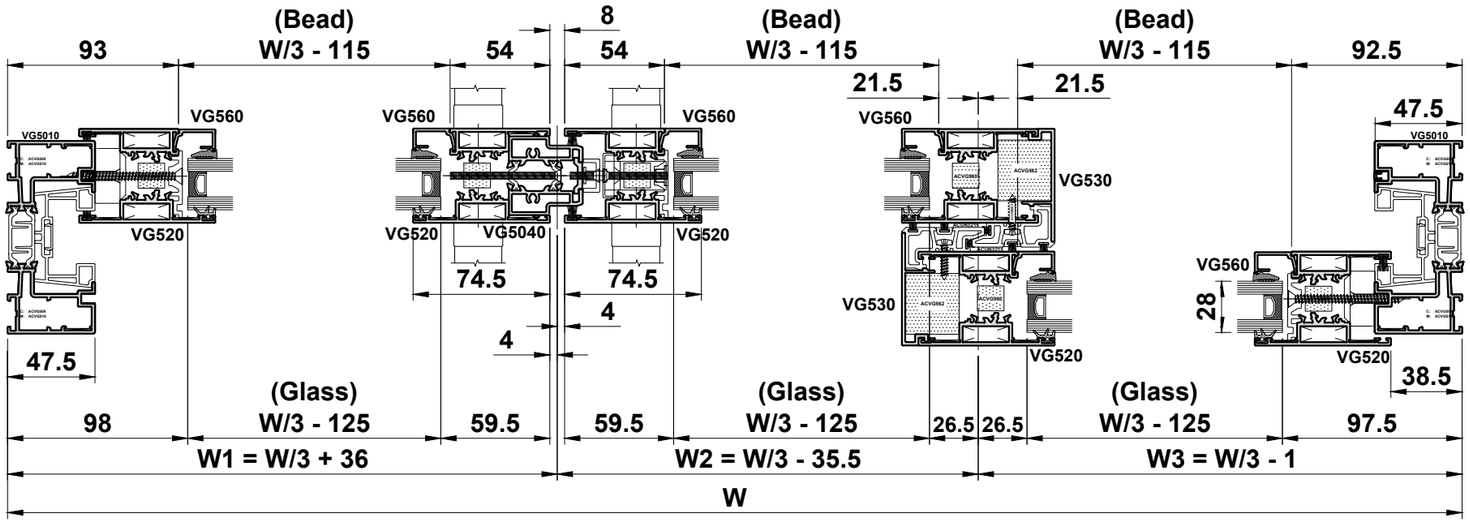

Do Not Scale From This Drawing

Cutting Information - 3 Pane Slide 35mm Interlock

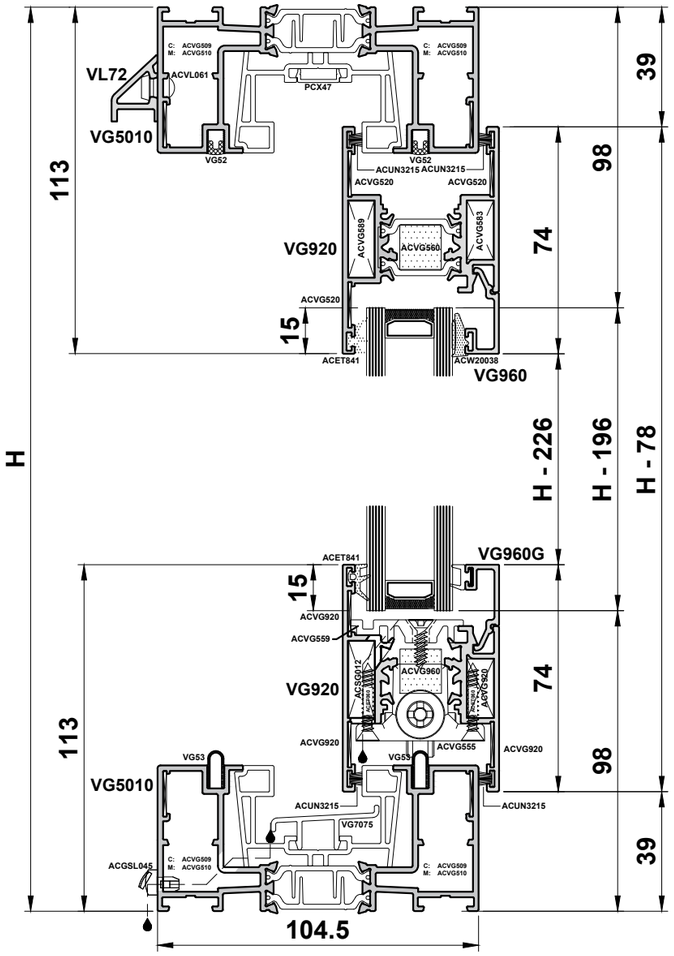

PROFILES

VG5010 (with VG5050)		2		W
VG5010 (with VG5050)		2		H
VG520		1		W2 - 9
VG520		1		W3 - 48.5
VG520		1		W2 - 10
VG520		1		W3 - 48.5
VG520		2		W1 - 47.5
VG520		4		H - 87
VG535		1		H - 87
VG536		1		H - 87
VG537		2		H - 87
VG552N		2		H - 87
VG5040		1		H - 125
BEAD		2		W/3 - 105
BEAD		4		W/3 - 108
BEAD		4		H - 235
VG565/VG566		4		H - 195
VG52		2		W - 104
VG52		2		H - 104
VG53		1		W - 94
VL72		1		W - 9
VG7075		1		W/3 - 57.5
VG7075		1		W/3 x 2 - 56.5
*VG5074		1		W - (W3 + 69.5)
*VG5014		1		W - (W3 + 69.5)
*VG5014		1		H - 98
VG586		2		H - 87

* Optional

ACCESSORIES

ACGSL045	MAX 600 mm	Drainage Cap
ACSG012	16	Sash Cleat
ACVG5032	2	Interlock Seal
ACUN348	2	Buffer
ACVG510	8	Outer Frame Cleats
ACVG520	32	Chevron
ACVG523	26	Lock Fixing Plates
ACVG5029	1 Set of 4	Anti Lift Block/Guide
ACVG5030	2 Pairs	Interlock Cover Cap
ACVG536	1 Pairs	End Caps
ACVG5040	1	VG540 End Cap
ACVG544	12	Fixed Sash Support
ACVG546	4	Interlock Anti-Lift Block
ACVG547	8	Fixing Bracket
ACVG555	2	Adjustable Rollers
ACVG559	14	Bridge Packer
ACVG571	4	Lock Fixing Support
ACVG575	500 mm centres	Support for VG575
ACVG580	1	Fixation Plate
ACVG81	1	Fixation Plate
ACVL059	1 Pair	VL72 End Cap
ACVL061	W/300 + 2	VL72/VL76 Rivet
ACVS033	4H	Woolpile
ACVS033	4H + 6W	Woolpile
Ext. Glazing Gasket	6H + 2W - 1100	'E' Gasket
Int. Glazing Gasket	6H + 2W - 1100	Wedge Gasket

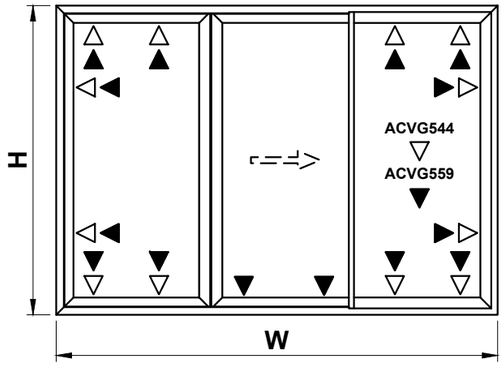

IMPORTANT NOTE:

Maximum Sash Weights:
Sliding Sashes = 250kg

GLASS SIZE	
3x	W/3 - 112
	H - 205

*See section E for lock & handle selection

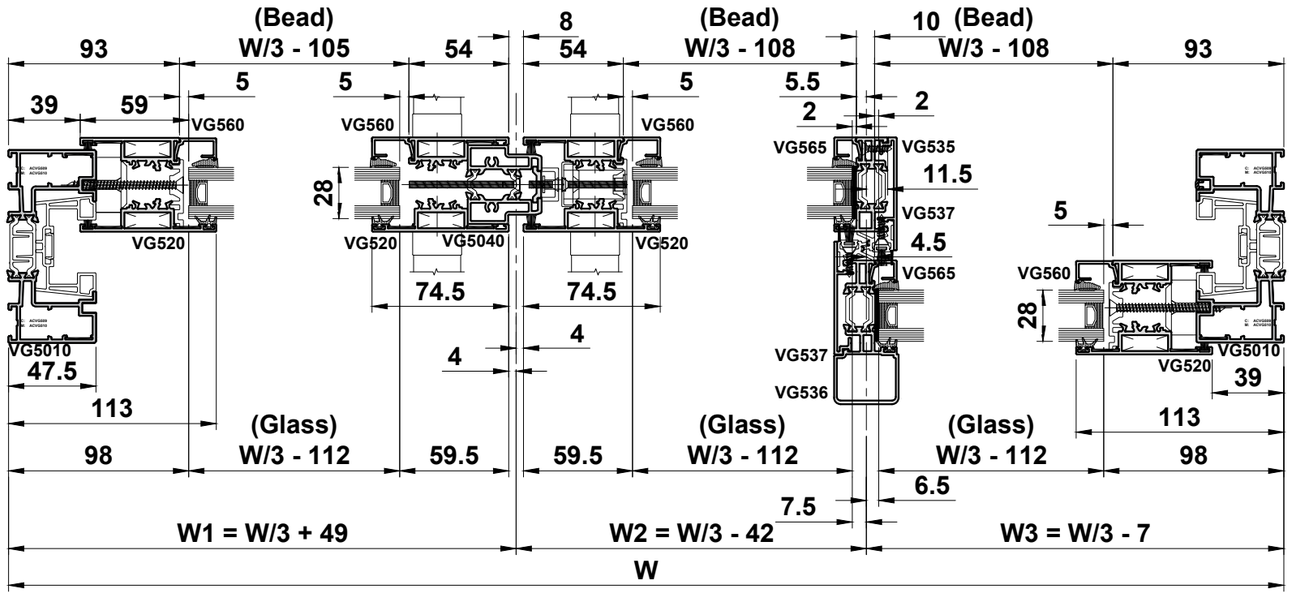

Do Not Scale From This Drawing

Cutting Information - 3 Pane 3 Track Slide 35mm Interlock

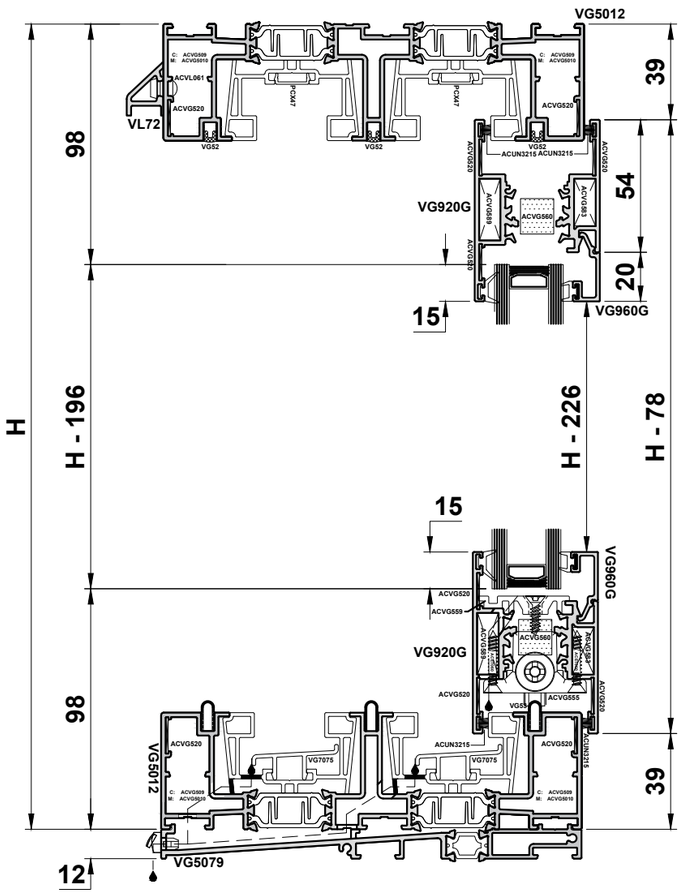

PROFILES

VG5012 (with VG5050)		2		W
VG5012 (with VG5050)		2		H
VG520		2		W1 - 44
VG520		2		W1 - 44
VG520		2		W2 - 10
VG520		2		H - 78
VG535		2		H - 78
VG536		2		H - 78
VG537		4		H - 78
VG552N		4		H - 78
BEAD		4		W/3 - 68
BEAD		2		W2 - 10
BEAD		2		H - 226
VG565/VG566		4		H - 226
VG52		3		W - 95
VG52		4		H - 95
VG53		3		W - 85
VL72		1		W - 9
VG7075		2		W/3 - 26.5
VG7075		2		W/3 x 2 - 87
*VG5074		1		2W/3 - 95
*VG5014		1		2W/3 - 95
*VG5014		1		H - 98
*VG5075		1		W/3 - 35
*VG5015		1		W/3 - 35
*VG5015		1		H - 98
*VG5079		1		W
VG586		4		H - 78

* Optional

ACCESSORIES

ACGSL045	MAX 600 mm	Drainage Cap
ACSG012	8	Sash Cleat
ACVG5032	4	Interlock Seal
ACUN348	4	Buffer
ACVG510	8	Outer Frame Cleats
ACVG520	24	Chevron
ACVG523	13	Lock Fixing Plates
ACVG528	8+	Sash Top Guide
ACVG5029	2 Set of 4	Anti Lift Block/Guide
ACVG5030	4 Pairs	Interlock Cover Cap
ACVG535	1 Pair	End Cap with Upstand
ACVG536	1 Pair	Flat End Caps
ACVG544	6	Fixed Sash Support
ACVG5046	8	Interlock Anti-Lift Block
ACVG547	16	Fixing Bracket
ACVG555	4	Adjustable Rollers
ACVG5079	1 Pair	VG5079 End Cap
ACVG559	10	Bridge Packer
ACVL059	1 Pair	VL72 End Cap
ACVL061	W/300 + 2	VL72/VL76 Rivet
ACVS033	4H	Woolpile
ACUN3215	4H + 6W	Woolpile
Ext. Glazing Gasket	6H + 2W - 1300	'E' Gasket
Int. Glazing Gasket	6H + 2W - 1300	Wedge Gasket

†Deductions for different sized glass

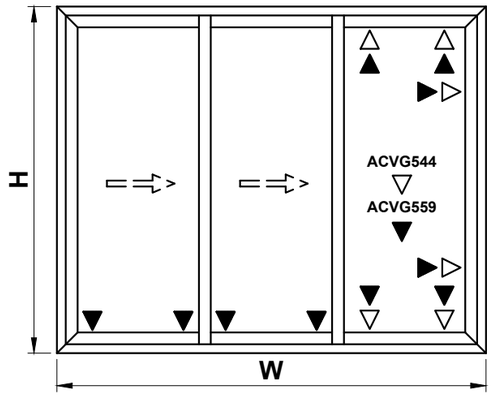

GLASS SIZE	
3x	W/3 - 75
	H - 205

IMPORTANT NOTE:

Maximum Sash Weights:
Sliding Sashes = 250kg

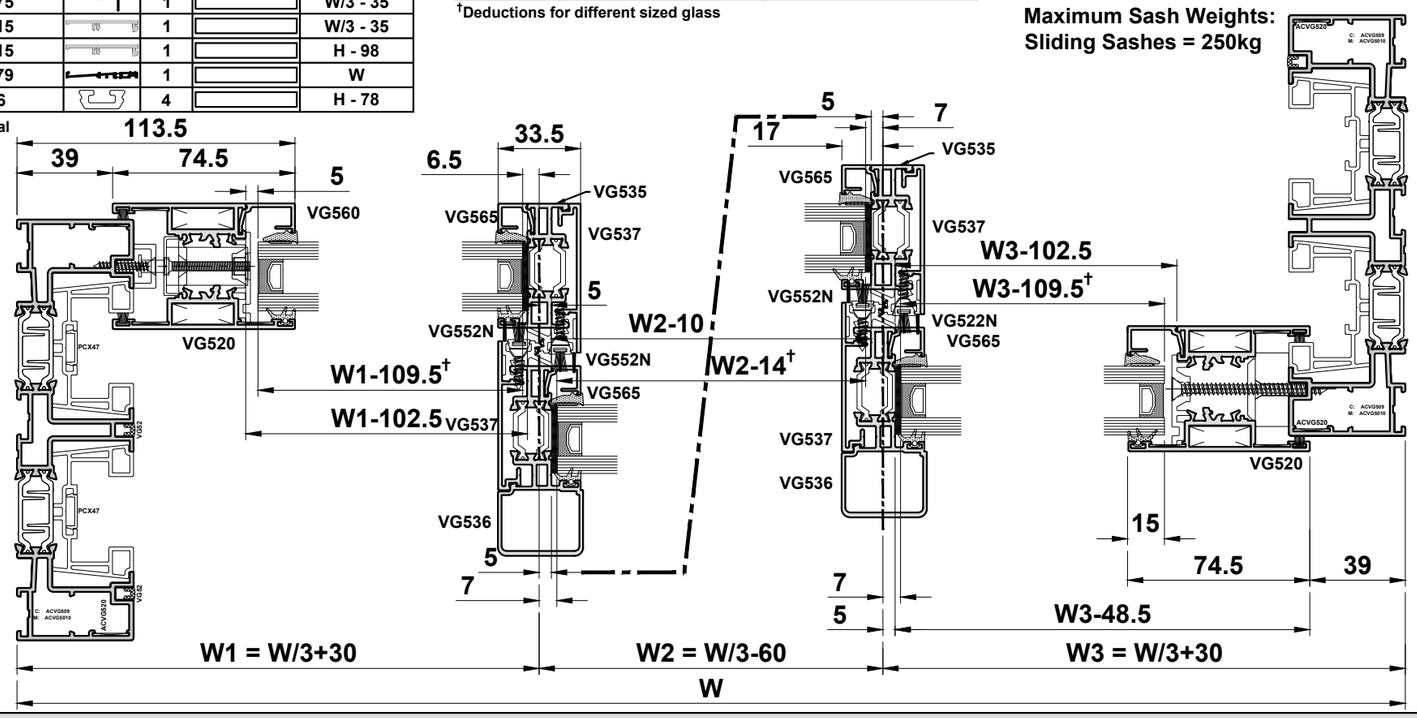

Do Not Scale From This Drawing

Cutting Information - 3 Pane 3 Track Slide 35mm Interlock HYB

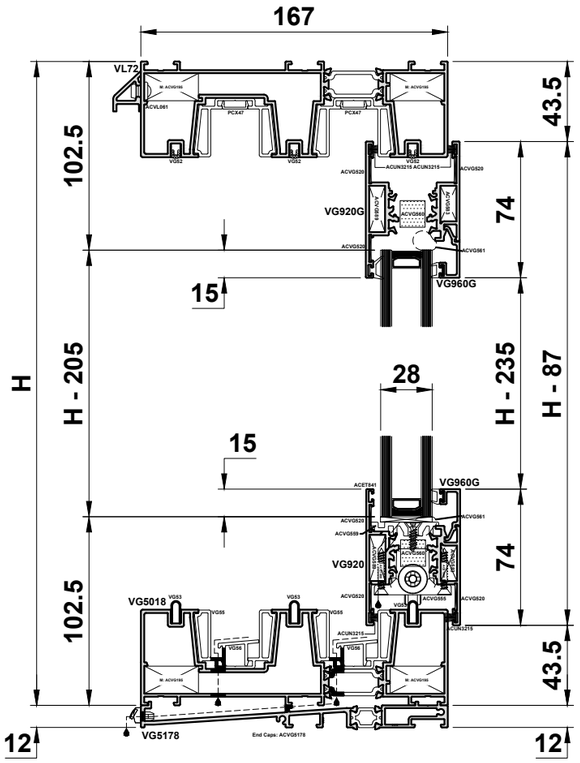

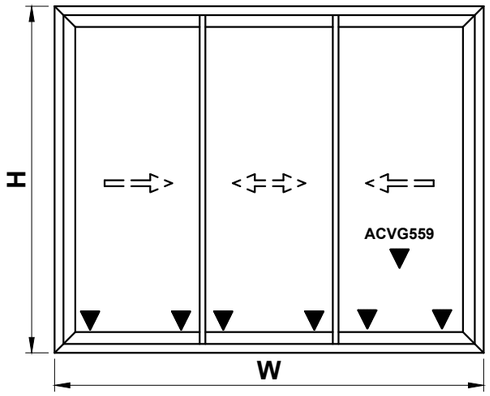

IMPORTANT NOTE:

Maximum Sash Weights:
Sliding Sashes = 250kg

GLASS SIZE	
3x	W/3 - 78
	H - 205

PROFILES

VG5018 (with VG55)		2		H
VG5018 (with VG55)		2		W
VG920		2		W/3 - 16.5
VG920		2		W/3 - 16.5
VG920		2		W/3 - 73
VG920		2		H - 87
VG534		2		H - 87
VG536		2		H - 87
VG537		4		H - 87
VG5052		4		H - 87
VG586		4		H - 87
VG565		4		H - 235
BEAD		6		H - 235
BEAD		6		W/3 - 78
VG52		4		H - 104
VG52		3		W - 104
VG53		3		W - 94
VG5178		1		W
VL72		1		W
VG56		2		W

ACCESSORIES

ACGSL045	MAX 600 mm	Drainage Cap
ACVG583	4	Sash Cleat
ACVG589	4	Sash Cleat
ACVG586	8	Interlock Fixing
ACVG30	4	Interlock Seal
ACUN348	6	Buffer
ACVG195	8	Outer Frame Cleats
ACVG520	12	Chevron
ACVG523	26	Lock Fixing Plates
ACVG528	8+	Sash Top Guide
ACVG529	1 Set of 4	Anti Lift Block/Guide
ACVG535	4 Pairs	Interlock Cover Cap
ACVG555	6	Adjustable Rollers
ACVG559	6	Bridge Packer
ACUN3215	4H + 4W	Woolpile
ACVG42	4H	VG5036 Woolpile
Ext. Glazing Gasket	6H + 2W	'E' Gasket
Int. Glazing Gasket	6H + 2W	Wedge Gasket

*See section E for lock & handle selection

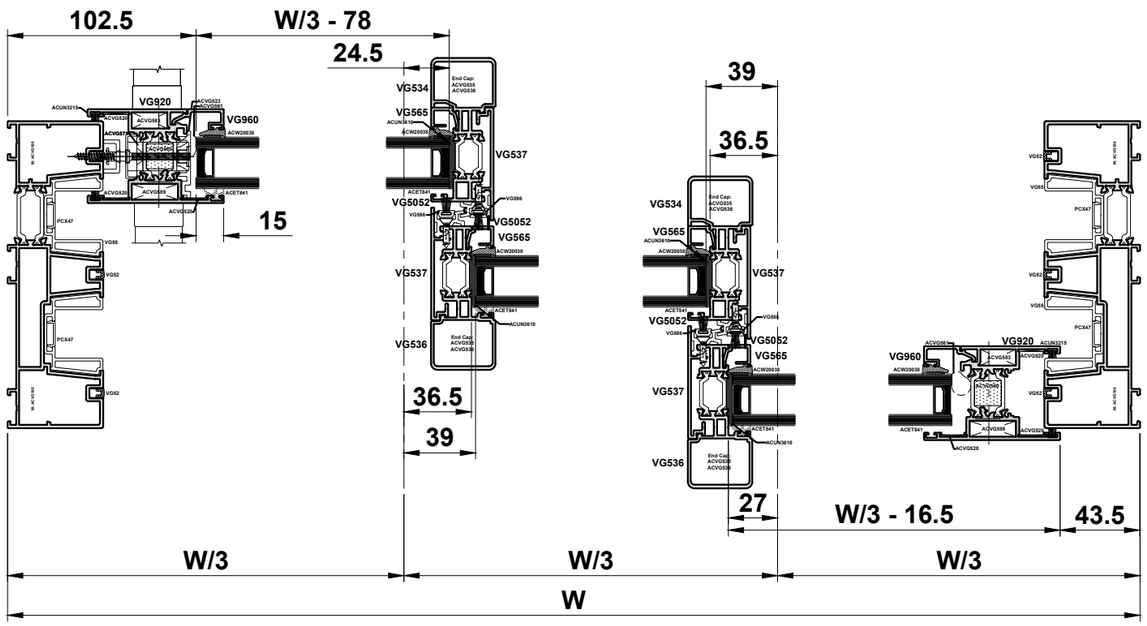

Do Not Scale From This Drawing

Cutting Information - 3 Pane 3 Track Slide 20mm Interlock

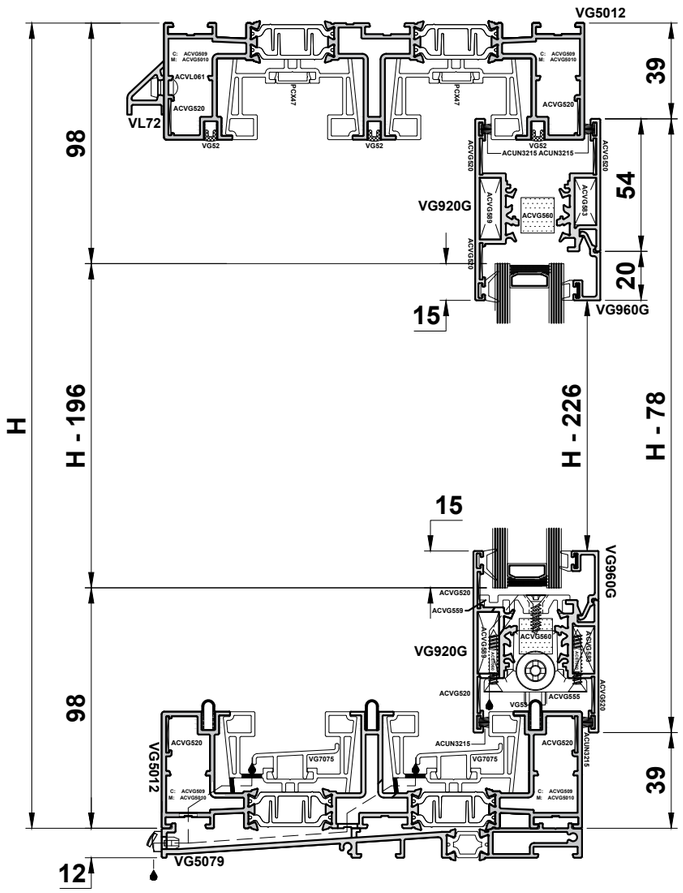

PROFILES

VG5012 (with VG5050)		2		W
VG5012 (with VG5050)		2		H
VG520		4		W1 - 39
VG520		2		W2
VG520		2		H - 78
BEAD		4		W/3 - 70.5
BEAD		2		W/3 - 85
BEAD		2		H - 228
VG52		4		H - 95
VG52		3		W - 95
VG53		2		W - 85
VL72		1		W - 9
VG565/VG566		4		H - 186
VG7075		2		W/3 - 23.5
VG7075		2		W/3 x 2 - 90
VG590		2		H - 78
VG592		2		H - 78
VG594		2		H - 226
VG596		4		H - 78

*We recommend to cut VG565/566 full height

GLASS SIZE	
3 x	W/3 - 65.5
	H - 196

ACCESSORIES

ACGSL045	MAX 800 mm	Drainage Cover Cap
ACSG012	8	Vent Cleats
ACUN348	2	Stoppers
ACVG510	8	Outer Frame Cleats
ACVG520	20	Chevrons
ACVG523	26	Fixing Plates
ACVG528	9+	Sash Top Guide
ACVG529	3 Sets Of 4	Anti Lift Block/Guide
ACVG547	16	Fixing Bracket
ACVG555	6	Rollers
ACVG559	6	Bridge Packer
ACVG591N	2	Interlock Cover Cap Kit
ACVG5032	2	Slim Interlock Plug
ACVG593	8	End Pad
ACVG594	2 Packs of 2	VG590 End Cap
ACVG595	2 Packs of 2	VG592 End Cap
ACVG597	2 Packs Of 4	Interlock Security Device
ACVL059	1	End Caps VL72
ACVL061	W/300 + 2	Rivets VL72
ACVS033	4H	Woolpile
ACUN3215	6H + 14W	Woolpile
Ext. Glazing Gasket	6H + 6W	'E' Gasket
Int. Glazing Gasket	6H + 6W	Wedge Gasket

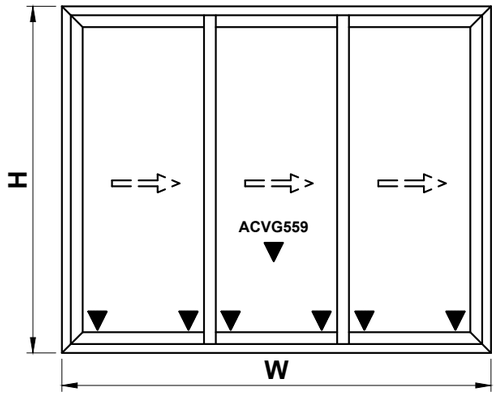

IMPORTANT NOTE:

Maximum Sash Weights:
Sliding Sashes = 250kg

**For PAS 24, additional 6 x ACVG597 required
***See section E for lock & handle selection

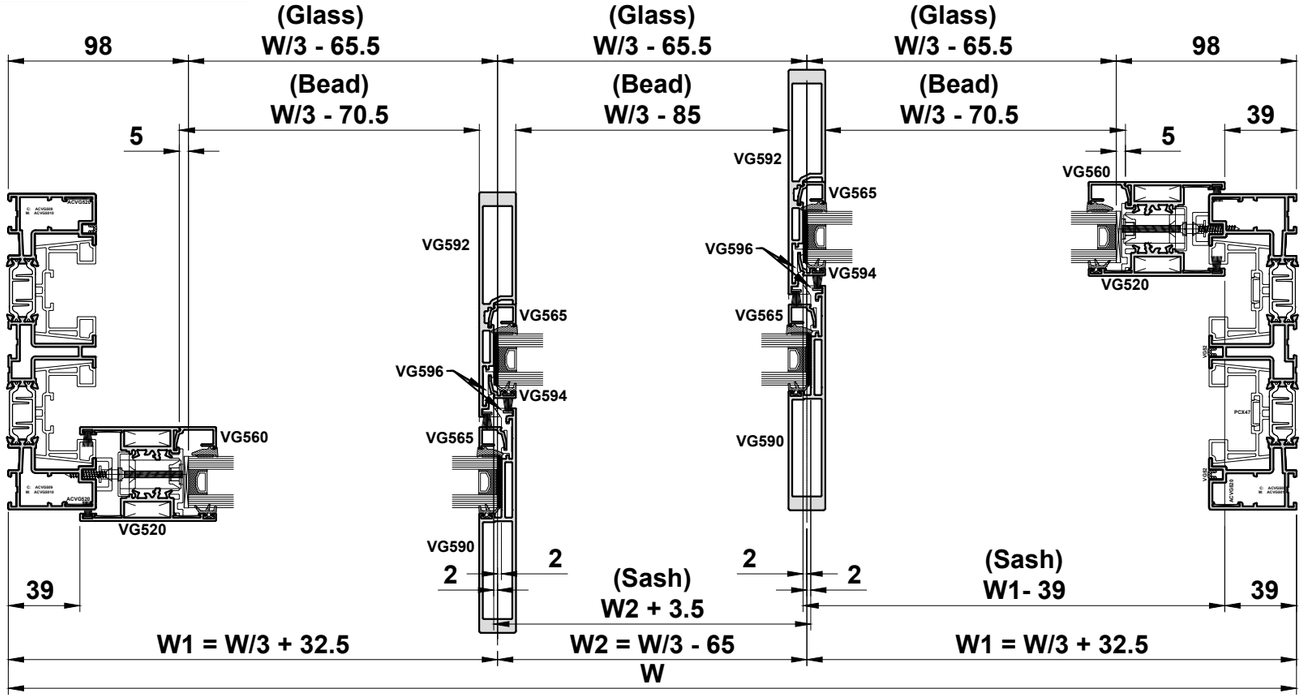

Do Not Scale From This Drawing

Cutting Information - 4 Pane Slide Standard Interlock

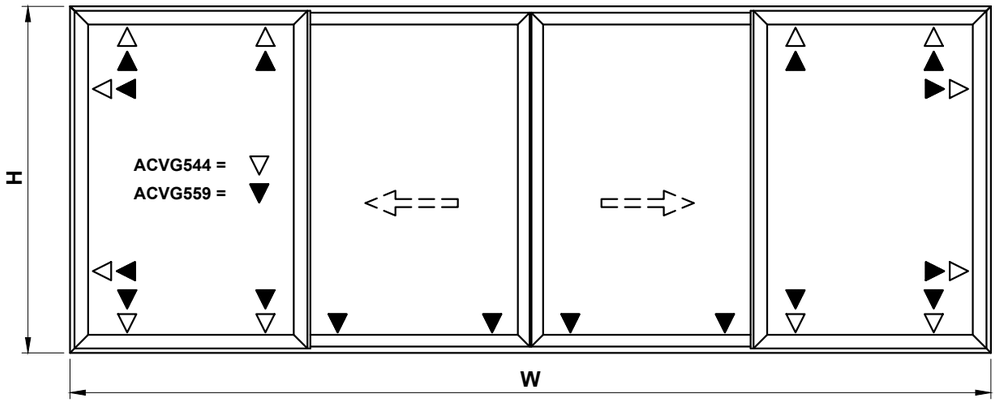

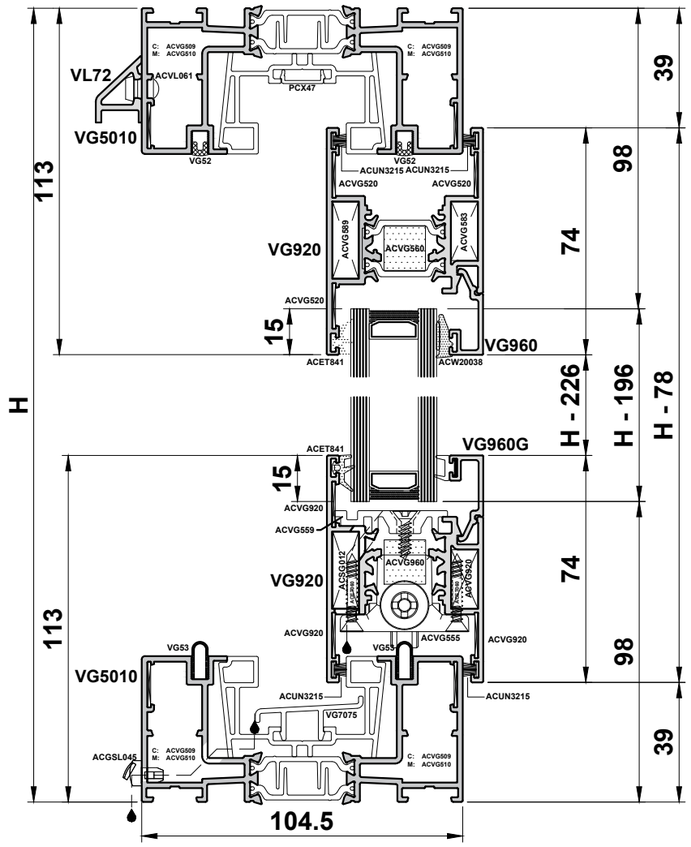

PROFILES

VG5010 (with VG5050)		2		W
VG5010 (with VG5050)		2		H
VG520		8		W/4 + 8.75
VG520		8		H - 78
VG530		4		H - 78
VG5050		4		H - 78
VG586		4		H - 78
VG542		1		H - 78
BEAD		8		W/4 - 99.25
BEAD		8		H - 196
VG53		1		W - 85
VG52		1		W - 95
VG52		2		W/2 - 60
VG52		3		H - 95
VL72		1		W - 9
VG7075		2		W/4 - 39
*VG5074		1		W/2 - 122.5
*VG5014		1		W/2 - 122.5

* Optional

GLASS SIZE	
4x	W/4 - 107
	H - 196

ACCESSORIES

ACGSL045	MAX 600 mm	Drainage Cap
ACSG012	32	Sash Cleat
ACVG5032	4	Interlock Seal
ACUN348	4	Buffer
ACVG520	56	Chevron
ACVG523	26	Lock Fixing Plates
ACVG5029	2 Set of 4	Anti Lift Block/Guide
ACVG5030	4 Pairs	Interlock Cover Cap
ACVG543	1 Pair	VG542 End Caps
ACVG544	12	Sash Supports
ACVG545	2	Meeting Stile Guide
ACVG555	4	Adjustable Rollers
ACVG559	16	Bridge Packer
ACVG571	4	Lock Fixing Support
ACVG580	1	Fixation Plate
ACVG5010	8	Outer Frame Cleat
ACVG81	1	Fixation Plate
ACVL059	1 Pair	VL72 End Cap
ACVL061	W/300 + 2	VL72/VL76 Rivet
ACVS033	16H + 5W - 500	Woolpile
ACUN3215	3H	VG542 Woolpile
Ext. Glazing Gasket	8H + 2W - 1300	'E' Gasket
Int. Glazing Gasket	8H + 2W - 1300	Wedge Gasket

*See section E for lock & handle selection

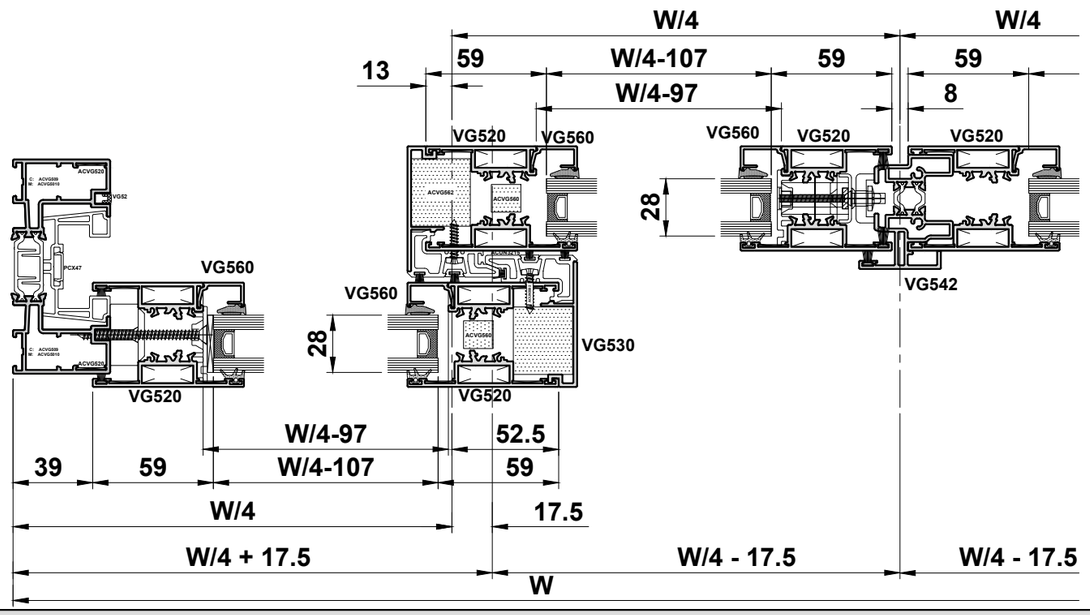

IMPORTANT NOTE:

Maximum Sash Weights:
Sliding Sashes = 250kg

Do Not Scale From This Drawing

Cutting Information - 4 Pane Slide Standard Interlock HYB

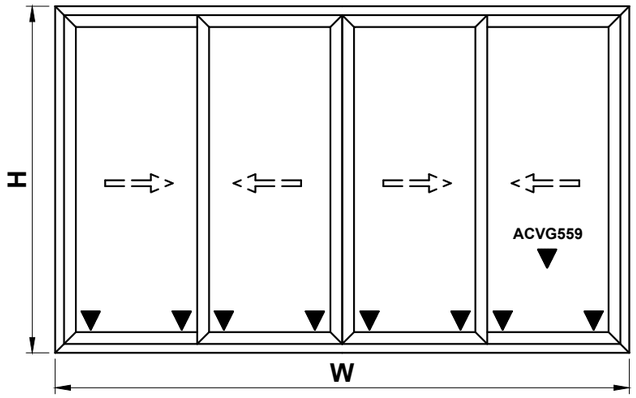

IMPORTANT NOTE:

Maximum Sash Weights:
Sliding Sashes = 250kg

PROFILES

VG5016 (with VG55)		2		W
VG5016 (with VG55)		2		H
VG920		8		W/4 + 8.5
VG920		8		H - 87
VG5036		4		H - 87
VG51		4		H - 87
BEAD		8		W/4 - 99.5
BEAD		4		H - 235
VG52		2		W - 104
VG52		4		H - 104
VG53		2		W - 94
VG56		1		W

GLASS SIZE	
4x	W/2 - 109
	H - 205

ACCESSORIES

ACGSL045	MAX 600 mm	Drainage Cap
ACVG583	16	Sash Cleat
ACVG589	16	Sash Cleat
ACVG30	3	Interlock Seal
ACUN348	4	Buffer
ACVG195	8	Outer Frame Cleats
ACVG520	48	Chevron
ACVG523	52	Lock Fixing Plates
ACVG528	16+	Sash Top Guide
ACVG529	2 Set of 4	Anti Lift Block/Guide
ACVG5030	4 Pairs	Interlock Cover Cap
ACVG555	8	Adjustable Rollers
ACVG559	8	Bridge Packer
ACVS033	3H	Woolpile
ACUN3215	4H + 4W	Woolpile
ACVG42	4H	VG5036 Woolpile
Ext. Glazing Gasket	8H + 2W	'E' Gasket
Int. Glazing Gasket	8H + 2W	Wedge Gasket

*See section E for lock & handle selection

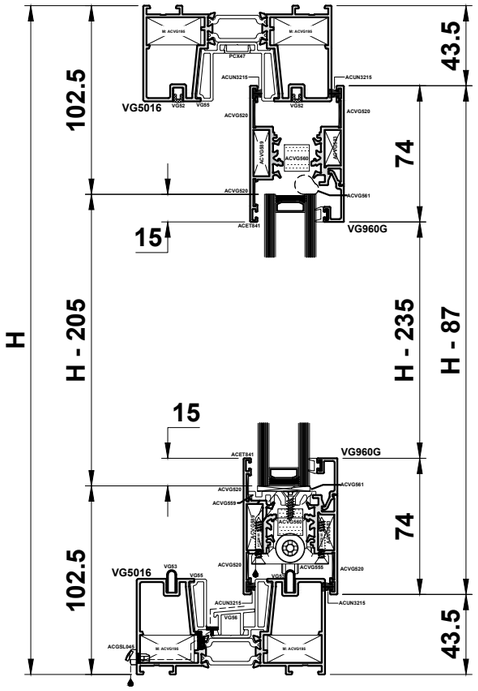

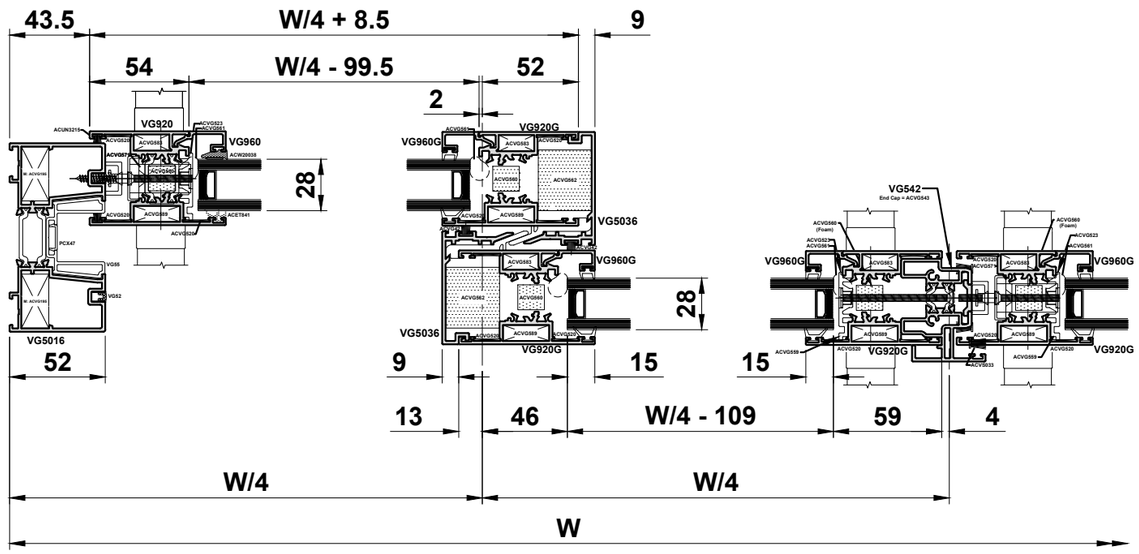

Do Not Scale From This Drawing

Cutting Information - 6 Pane 3 Track Slide Standard Interlock HYB

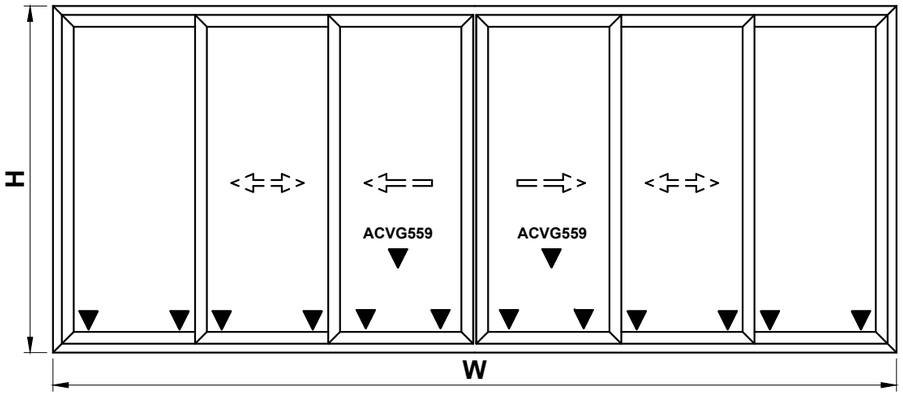

PROFILES

VG5018 (with VG55)		2		H
VG5018 (with VG55)		2		W
VG542		1		H - 125
VG920		12		W/6 + 27.5
VG920		12		H - 87
VG5036		8		H - 87
VG51		8		H - 87
BEAD		12		H - 235
BEAD		12		W/6 - 80.5
VG52		4		H - 104
VG52		3		W - 104
VG53		2		W - 94
VG5178		1		W
VL72		1		W
VG56		2		W
VG5154		2		(W/6x4)-160
VG5155		2		(W/6x2)-85

ACCESSORIES

ACGSL045	MAX 600 mm	Drainage Cap
ACVG583	24	Sash Cleat
ACVG589	24	Sash Cleat
ACVG30	8	Interlock Seal
ACUN348	4	Buffer
ACVG195	8	Outer Frame Cleats
ACVG520	72	Chevron
ACVG523	26	Lock Fixing Plates
ACVG5029	4 Set of 4	Anti Lift Block
ACVG5030	4 Pairs	Interlock Cover Cap
ACVG5040	1	VG542 End Cap
ACVG544	12	Sash Support Block
ACVG555	8	Adjustable Rollers
ACVG5178	1 Pair	VG5178 End Cap
ACVG559	12	Bridge Packer
ACVL059	1 Pair	VL72 End Cap
ACVL061	W/300 + 2	VL72/VL76 Rivet
ACUN3215	7H + 4W	Woolpile
ACVG42	4H	Woolpile
Ext. Glazing Gasket	12H + 2W	'E' Gasket
Int. Glazing Gasket	12H + 2W	Wedge Gasket

*See section E for lock & handle selection

GLASS SIZE	
6x	W/6 - 90.5
	H - 205

IMPORTANT NOTE:

Maximum Sash Weights:
Sliding Sashes = 250kg

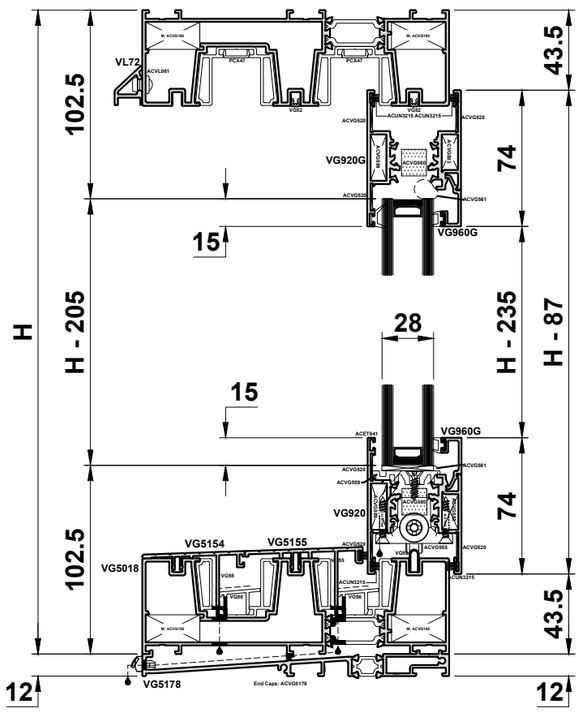

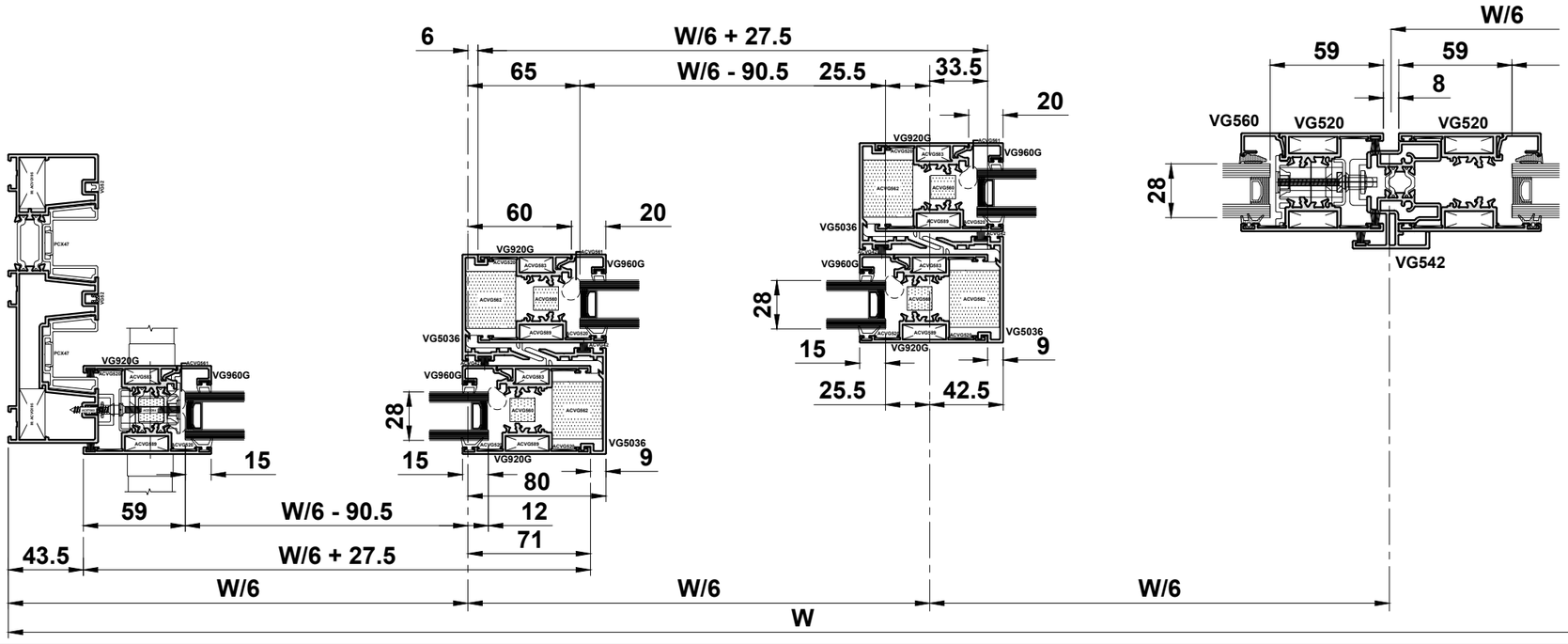

Do Not Scale From This Drawing

Cutting Information - 6 Pane 3 Track Slide 35mm Interlock HYB

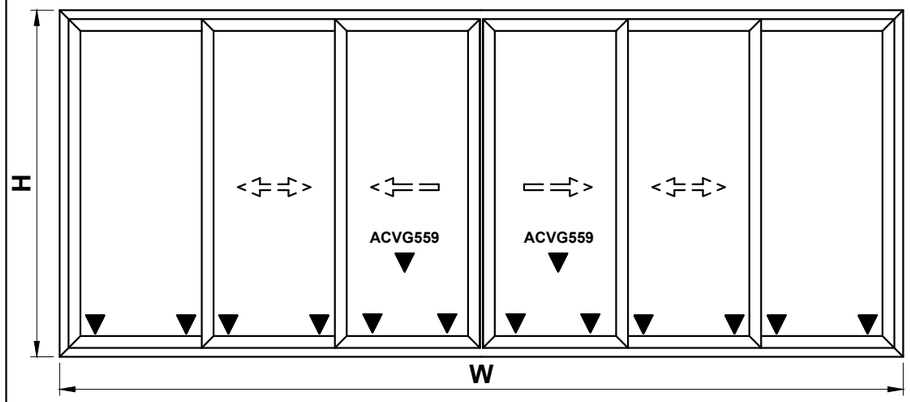

IMPORTANT NOTE:

Maximum Sash Weights:
Sliding Sashes = 250kg

GLASS SIZE	
6x	W/6 - 64.5
	H - 205

PROFILES

VG5018 (with VG55)	2	W
VG5018 (with VG55)	2	H
VG520	2	W1: W/6 - 3.5
VG520	2	W1: W/6 - 3.5
VG520	4	W2: W/6 + 60
VG520	2	W3: W/6 - 3.5
VG520	2	W3: W/6 - 3.5
VG520	4	H - 47.5
VG534	4	H - 87
VG536	4	H - 87
VG537	8	H - 87
VG5052	8	H - 87
VG542	1	H - 125
BEAD	2	W/3 - 105
BEAD	4	W/3 - 108
BEAD	4	H - 235
VG565/VG566	4	H - 195
VG52	3	W - 104
VG52	6	H - 104
VG53	2	W - 94
VL72	1	W-9
VG56	2	W
VG5154	2	(W/6x4)123
VG5155	1	(W/6x2)-22
VG586	8	H - 87

ACCESSORIES

ACGSL045	MAX 600 mm	Drainage Cap
ACSG012	16	Sash Cleat
ACVG530	8	Interlock Seal
ACUN348	4	Buffer
ACVG195	8	Outer Frame Cleats
ACVG520	24	Chevron
ACVG523	26	Lock Fixing Plates
ACVG5029	4 Set of 4	Anti Lift Block/Guide
ACVG5030	4 Pairs	Interlock Cover Cap
ACVG536	1 Pairs	End Caps
ACVG5040	1	VG542 End Cap
ACVG544	12	Fixed Sash Support
ACVG546	4	Interlock Anti-Lift Block
ACVG547	32	Fixing Bracket
ACVG555	4	Adjustable Rollers
ACVG559	12	Bridge Packer
ACVG571	4	Lock Fixing Support
ACVG580	1	Fixation Plate
ACVG81	1	Fixation Plate
ACVL059	1 Pair	VL72 End Cap
ACVL061	W/300 + 2	VL72/VL76 Rivet
ACVS033	11H	Woolpile
ACUN3215	4H + 2W	Woolpile
Ext. Glazing Gasket	6H + 2W - 1100	'E' Gasket
Int. Glazing Gasket	6H + 2W - 1100	Wedge Gasket

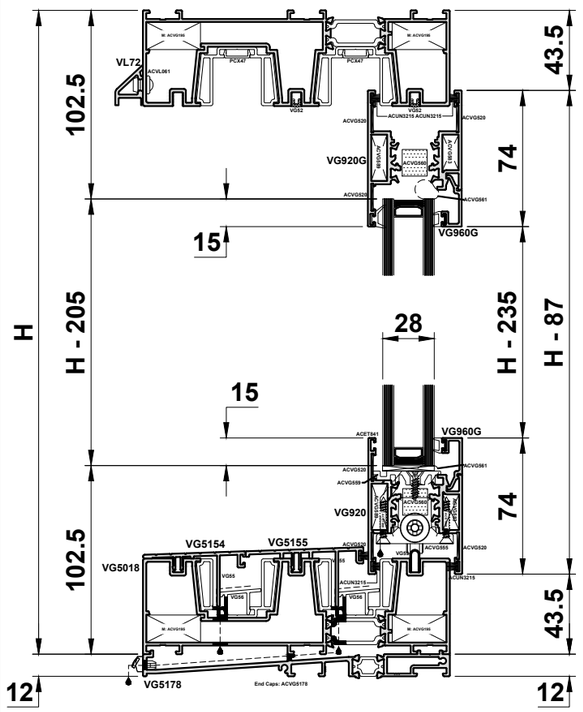

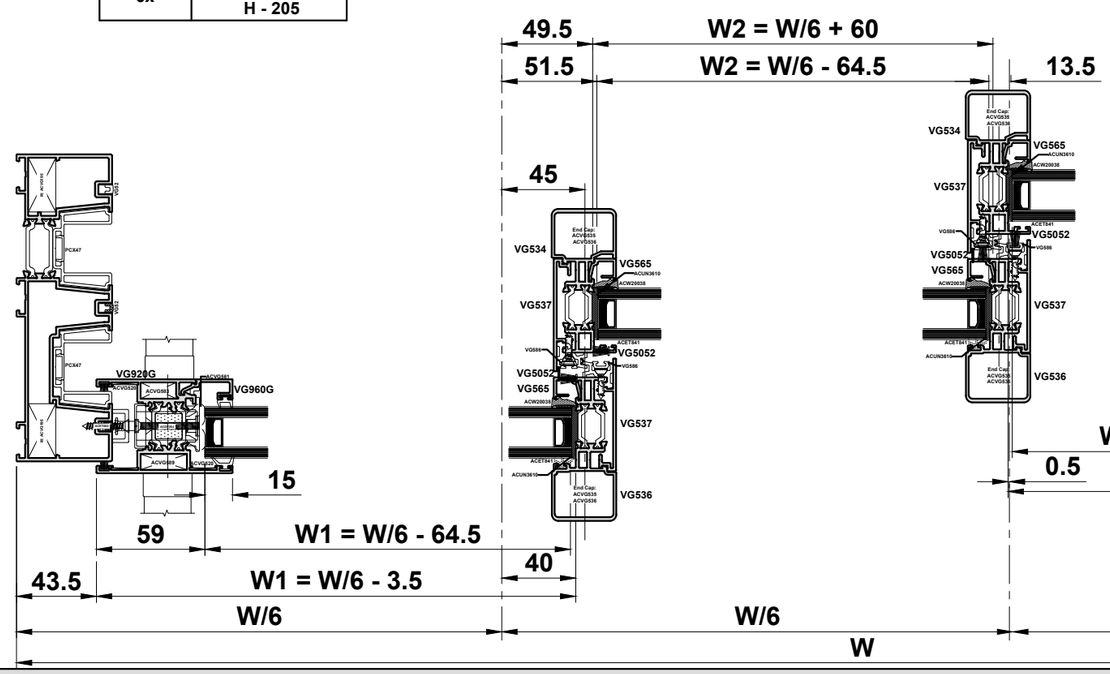

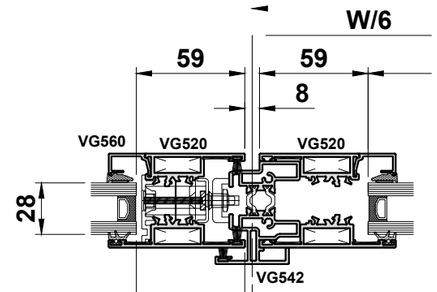

Do Not Scale From This Drawing

Cutting Information - 2 Pane Lift & Slide Standard Interlock

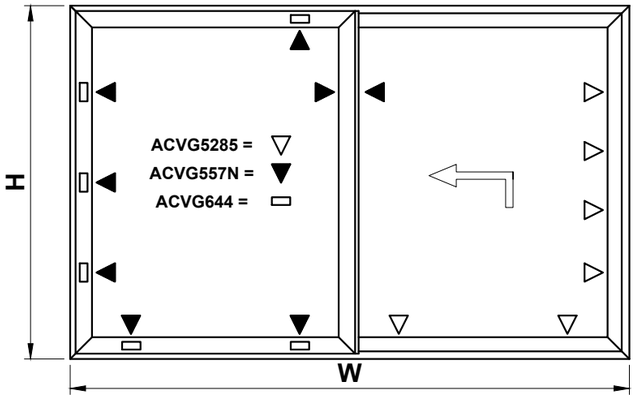

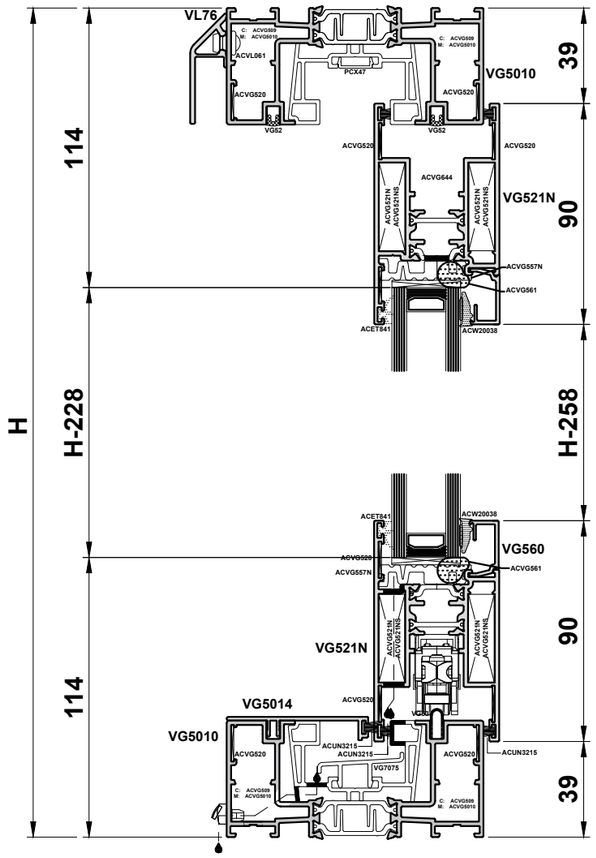

PROFILES

VG5010 (with VG5050)		2		W
VG5010 (with VG5050)		2		H
VG521N/VG920		4		W/2 + 1.5
VG521N/VG921		4		H - 78
VG530		2		H - 78
VG553N		2		H - 78
UG852		2		H - 79
BEAD		4		W/2 - 143
BEAD		4		H - 258
VG53		1		W - 94
VG52		1		W - 104
VG52		2		W/2 - 70.5
VG52		2		H - 95
VL76		1		W - 9
VG7075		1		W/2 - 89
*VG5014		1		H - 108
*VG5014		1		W/2 - 93.5
*VG5074		1		W/2 - 93.5

*Optional

GLASS SIZE	
2x	W/2 - 148.5
	H - 228

ACCESSORIES

ACGSL045	MAX 600 mm	Drainage Cap
ACVG5034	1	Interlock Seal
ACUN348	2	Buffer
ACVG269...273**	1	Connecting Rods
ACVG277...279**	1	Lift and Slide Drive Gear
ACVG5285	1	Basic Lift and Slide Kit
ACVG920	32	Chevrons
ACVG521N(S)	16	VG521N Corner Cleat
ACVG5031	2 Pairs	Interlock Cover Cap
ACVG557N	8	Bridge Packer
ACVG5010	8	Outer Frame Cleat
ACVG644	6	VG521N Vent Support
ACVL061	W/300 + 2	VL72/VL76 Rivet
ACUN3215	9H + 5W	Woolpile
Ext. Glazing Gasket	4H + 2W - 1500	'E' Gasket
Int. Glazing Gasket	4H + 2W - 1500	Wedge Gasket

**See Section E for:

- Connecting rod length requirements
- Drive gear length requirements
- Lock & Handle selection

IMPORTANT NOTE:

Maximum Sash Weights:
Lift & Slide = 200kg

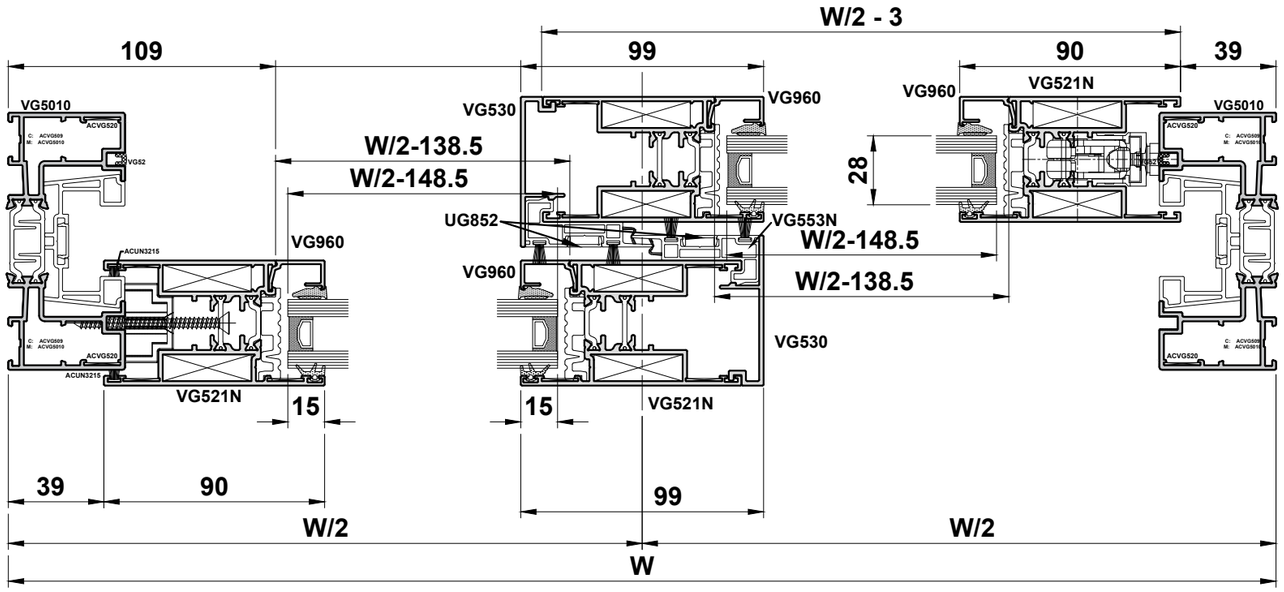

Do Not Scale From This Drawing

Cutting Information - 2 Pane High Security Lift & Slide Standard Interlock

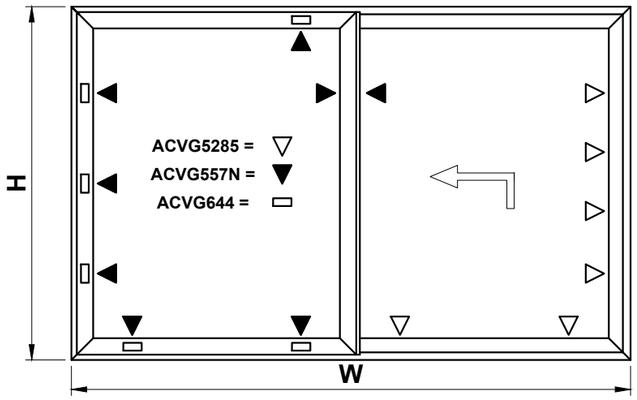

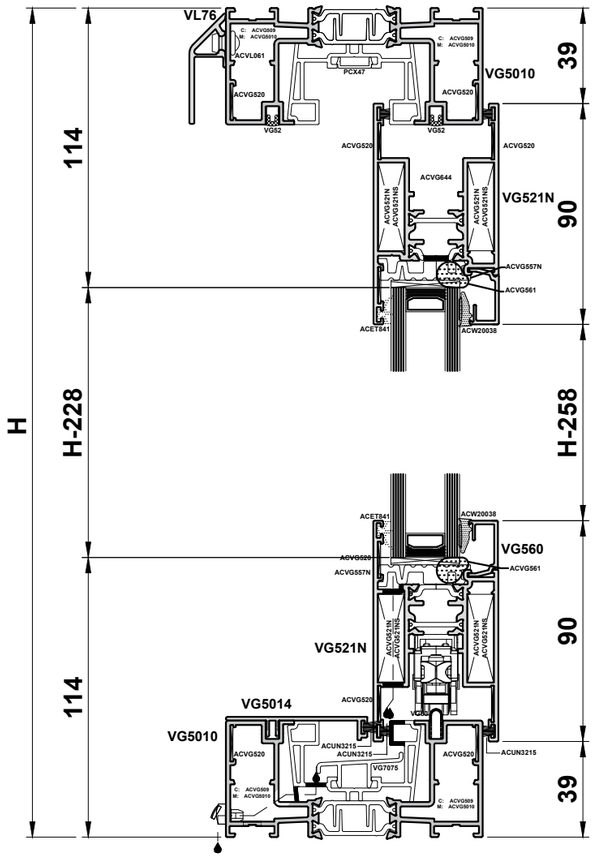

PROFILES

VG5010 (with VG5050)		2		W
VG5010 (with VG5050)		2		H
VG521N/VG920		4		W/2 + 1.5
VG521N/VG921		4		H - 78
VG530		2		H - 78
VG553N		2		H - 78
UG852		2		H - 79
BEAD		4		W/2 - 143
BEAD		4		H - 258
VG53		1		W - 94
VG52		1		W - 104
VG52		2		W/2 - 70.5
VG52		2		H - 95
VL76		1		W - 9
VG7075		1		W/2 - 89
*VG5014		1		H - 108
*VG5014		1		W/2 - 93.5
*VG5074		1		W/2 - 93.5

*Optional

GLASS SIZE	
2x	W/2 - 148.5
	H - 228

ACCESSORIES

ACGSL045	MAX 600 mm	Drainage Cap
ACVG5034	1	Interlock Seal
ACUN348	2	Buffer
ACVG269...273**	1	Connecting Rods
ACVG5276...278**	1	Lift and Slide Drive Gear
ACVG5284	2**	Hook Lock Keep
ACVG5285	1	Basic Lift and Slide Kit
ACVG5268*	1	Guide Bracket
ACVG920	32	Chevrons
ACVG521N(S)	16	VG521N Corner Cleat
ACVG5031	2 Pairs	Interlock Cover Cap
ACVG557N	16	Bridge Packer
ACVG5010	8	Outer Frame Cleat
ACVG644	6	VG521N Vent Support
ACVL061	W/300 + 2	VL72/VL76 Rivet
ACUN3215	9H + 5W	Woolpile
Ext. Glazing Gasket	4H + 2W - 1500	'E' Gasket
Int. Glazing Gasket	4H + 2W - 1500	Wedge Gasket

**See Section E for:

- Connecting rod length requirements
- Drive gear length requirements
- Keep requirements
- Lock & Handle selection

IMPORTANT NOTE:

Maximum Sash Weights:
Lift & Slide = 270kg
Lift & Slide (with additional ACVG5287 roller) = 400kg

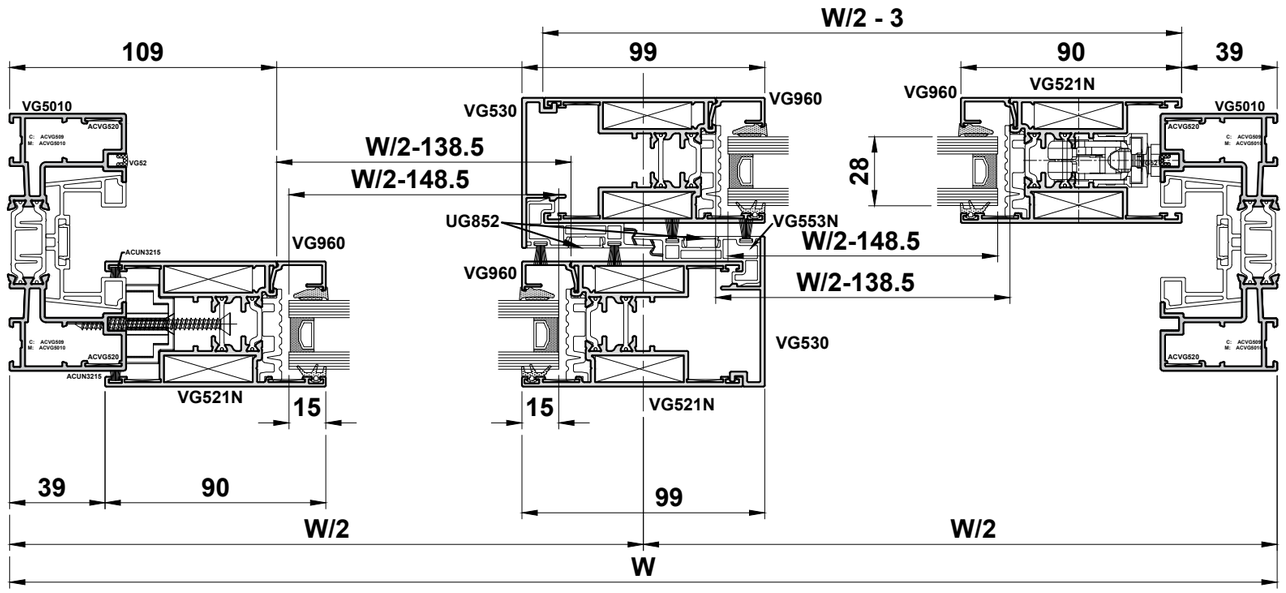

Do Not Scale From This Drawing

Cutting Information - 2 Pane PAS24 Lift & Slide Standard Interlock

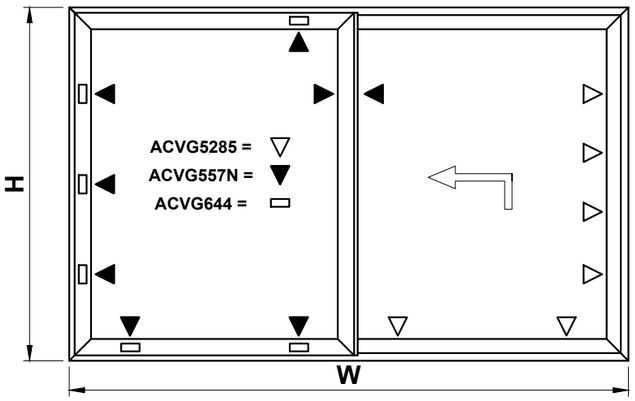

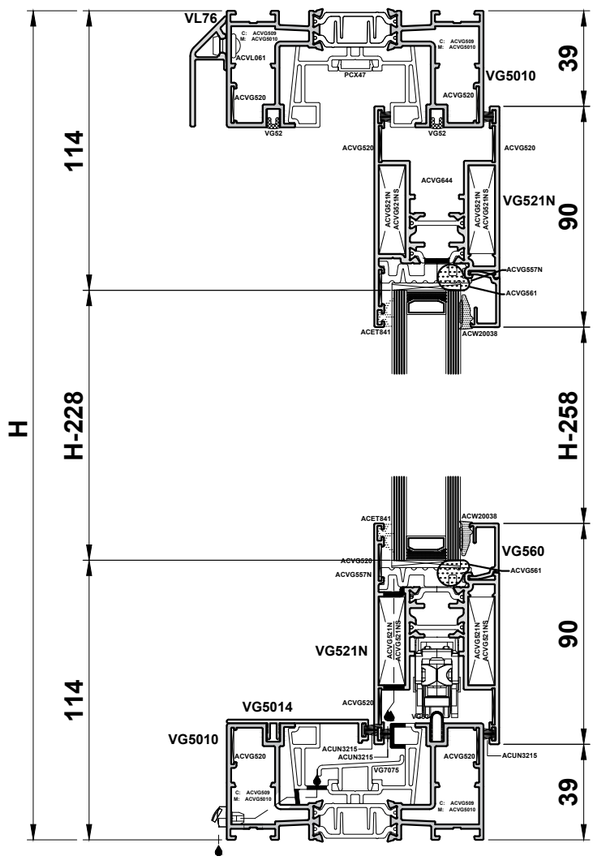

PROFILES

VG5010 (with VG5050)		2		W
VG5010 (with VG5050)		2		H
VG521N/VG920		4		W/2 + 1.5
VG521N/VG921		4		H - 78
VG530		2		H - 78
VG553N		2		H - 78
UG852		2		H - 79
BEAD		4		W/2 - 143
BEAD		4		H - 258
VG53		1		W - 94
VG52		1		W - 104
VG52		2		W/2 - 70.5
VG52		2		H - 95
VL76		1		W - 9
VG7075		1		W/2 - 89
*VG5014		1		H - 108
*VG5014		1		W/2 - 93.5
*VG5074		1		W/2 - 93.5

*Optional

GLASS SIZE	
2x	W/2 - 148.5
	H - 228

ACCESSORIES

ACGSL045	MAX 600 mm	Drainage Cap
ACVG5034	1	Interlock Seal
ACUN348	2	Buffer
ACVG269...273**	1	Connecting Rods
ACVG5276...278**	1	Lift and Slide Drive Gear
ACVG5284	2**	Hook Lock Keep
ACVG5285	1	Basic Lift and Slide Kit
ACVG5268*	1	Guide Bracket
ACVG1597	2	Interlock Security Device
ACVG256	1	Interlock Lock
ACVG257	1	Interlock Lock Keep
ACVG920	32	Chevrons
ACVG521N(S)	16	VG521N Corner Cleat
ACVG5031	2 Pairs	Interlock Cover Cap
ACVG557N	16	Bridge Packer
ACVG5010	8	Outer Frame Cleat
ACVG644	6	VG521N Vent Support
ACVL061	W/300 + 2	VL72/VL76 Rivet
ACUN3215	9H + 5W	Woolpile
Ext. Glazing Gasket	4H + 2W - 1500	'E' Gasket
Int. Glazing Gasket	4H + 2W - 1500	Wedge Gasket

**See Section E for:

- Connecting rod length requirements
- Drive gear length requirements
- Keep requirements
- Lock & Handle selection

IMPORTANT NOTE:

Maximum Sash Weights:
Lift & Slide = 270kg
Lift & Slide (with additional ACVG5287 roller) = 400kg

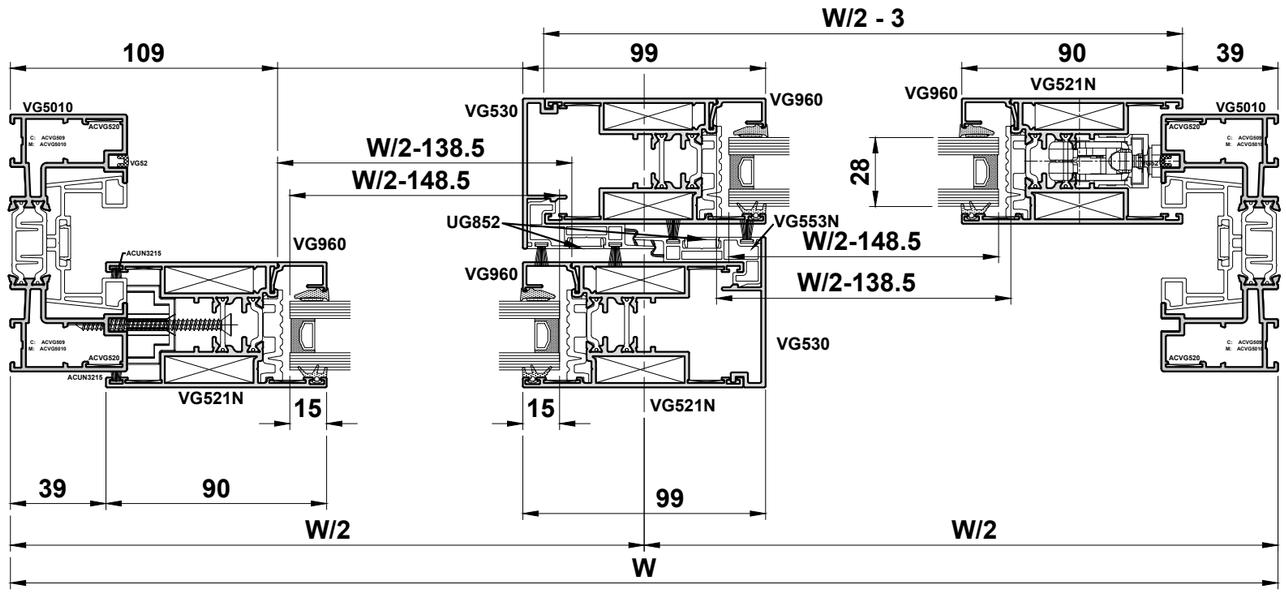

Do Not Scale From This Drawing

Cutting Information - 2 Pane Mono Track Lift & Slide Standard Interlock

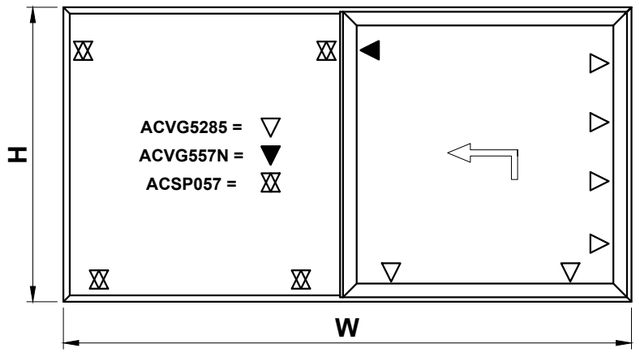

IMPORTANT NOTE:

Maximum Sash Weights:
Lift & Slide = 200kg

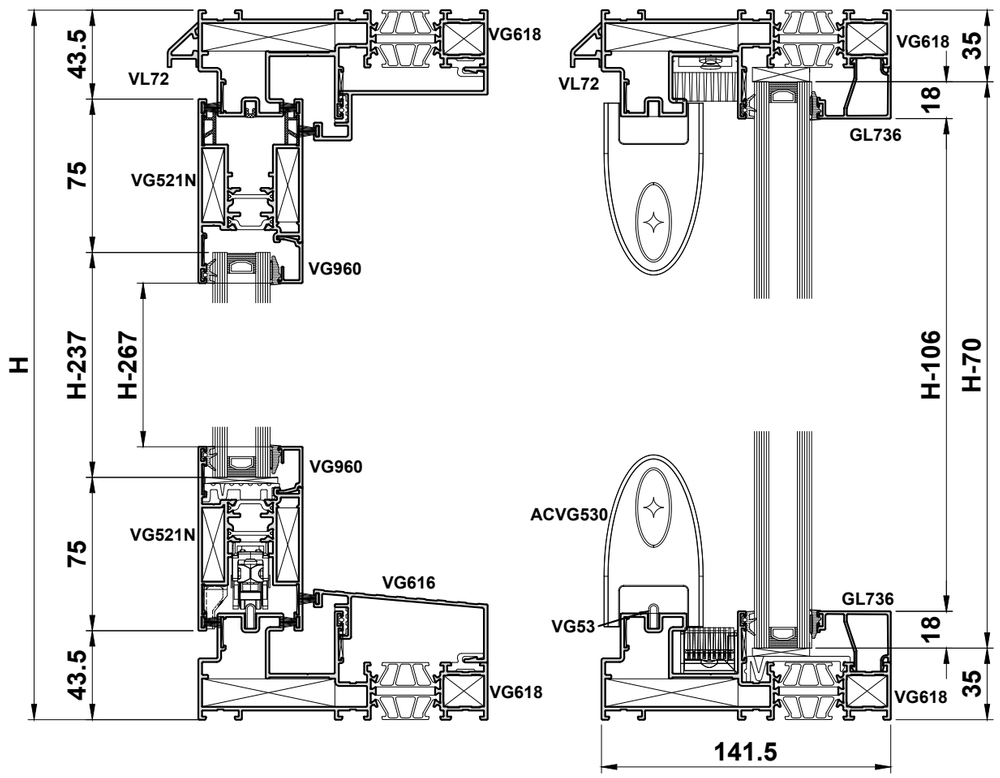

PROFILES

VG618	2		W
VG618	2		H
VG521N	2		W/2 - 3
VG521N	2		H - 87
VG621	1		H - 56
VG530	1		H - 87
VG630	1		H - 56
VG553N	2		H - 87
UG852	2		H - 87
VG615	1		W/2 - 77.5
VG615	1		H - 56
VG616	1		W/2 - 91
VG5XX	2		W/2 - 143
VG5XX	2		H - 267
GL7XX	2		W / 2 -52.5
GL7XX	2		H - 106
VG53	1		W - 94
VG52	1		W - 104
VG52	2		H - 92
VL72	1		W - 9

GLASS SIZE	
Fixed 1x	W/2 - 66.5
	H - 70
Sash 1x	W/2 - 153
	H - 237

ACCESSORIES

ACEF010B ACVG611BX	4	VG610/618 Corner Cleat
ACFT171	(H + W - 200) / 300	Clip-In Adaptor
ACGSL057	2	Storm Valve
ACSG631	H + W - 200	VG610/618 Interlock Seal
ACSP057	4	VG610/618 Glass Support
ACUG631	1	VG610/618 Interlock Seal
ACUG632	1	VG610/618 Interlock Seal
ACUN348	2	Buffer
ACVG269...273*	1	Connecting Rods
ACVG277...279*	1	Lift and Slide Drive Gear
ACVG5285	1	Basic Lift and Slide Kit
ACVG45N	MAX 600 mm	Drainage Cap
ACVG920	16	Chevron
ACVG521N(S)	8	VG521N Corner Cleat
ACVG528	4+	Top Guides
ACVG531	1 Pair	Interlock Cover Cap
ACVG534	4+	Sash Drainage Spout
ACVG557N	1	Bridge Packer
ACVG618X	4	VG618 Corner Cleat
ACVL020(B)	4	Chevron
ACVL029	6	Anti-Twist Clip
ACVL059	1	VL72 End Cap
ACVL061	W/300 + 2	Rivet
ACVS033	7H + 5W	Woolpile
Ext. Glazing Gasket	(1) 2H + W - 200 (2) 2H + W - 700	E-Gasket
Int. Glazing Gasket	(1) 2H + W - 200 (2) 2H + W - 700	Wedge Gasket

*See section B for connecting rod and lock length requirements
*See section E for lock & handle selection

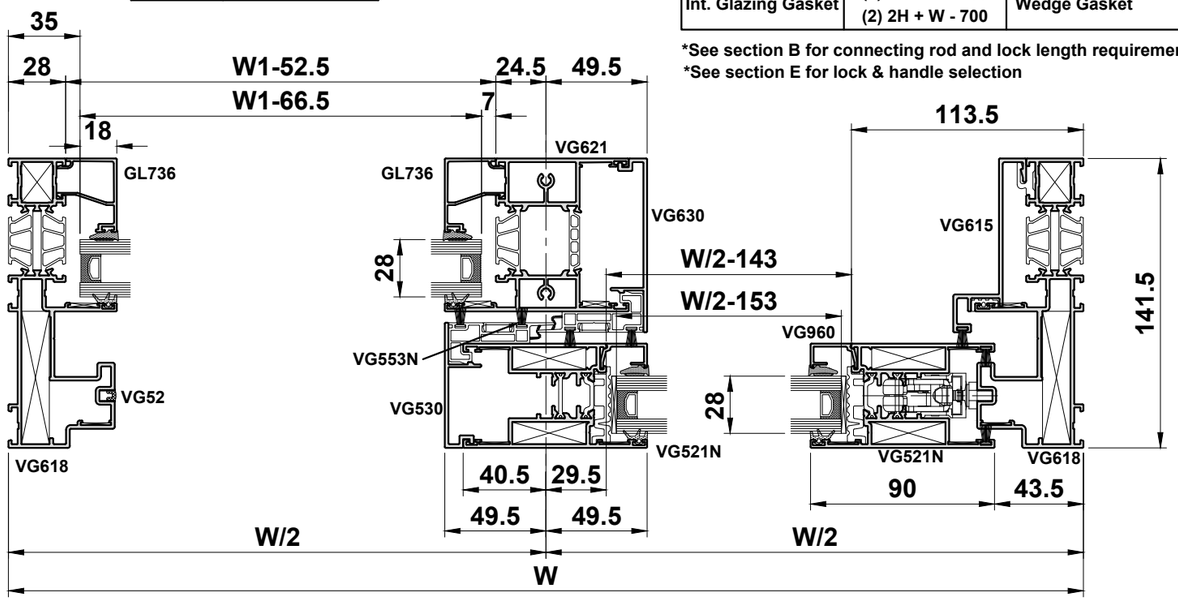

Do Not Scale From This Drawing